NOTES:
1. FOR GENERAL NOTES AND REFERENCE DRAWINGS SEE 5GW1740-EG-01.

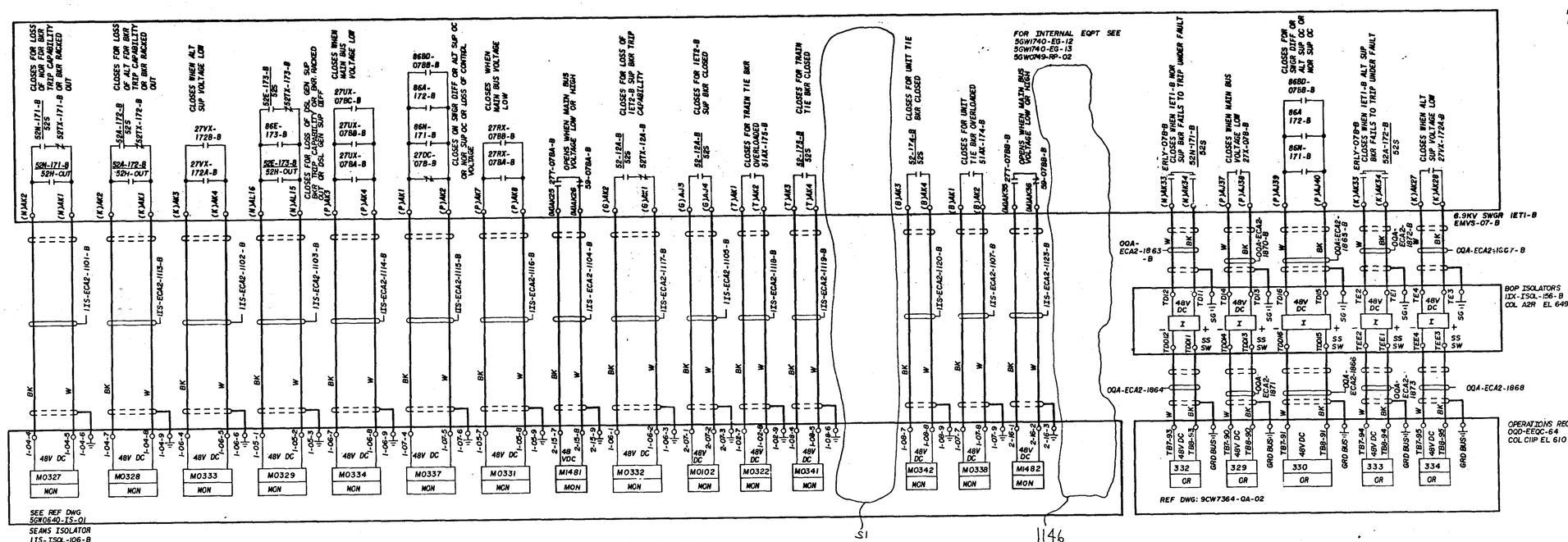

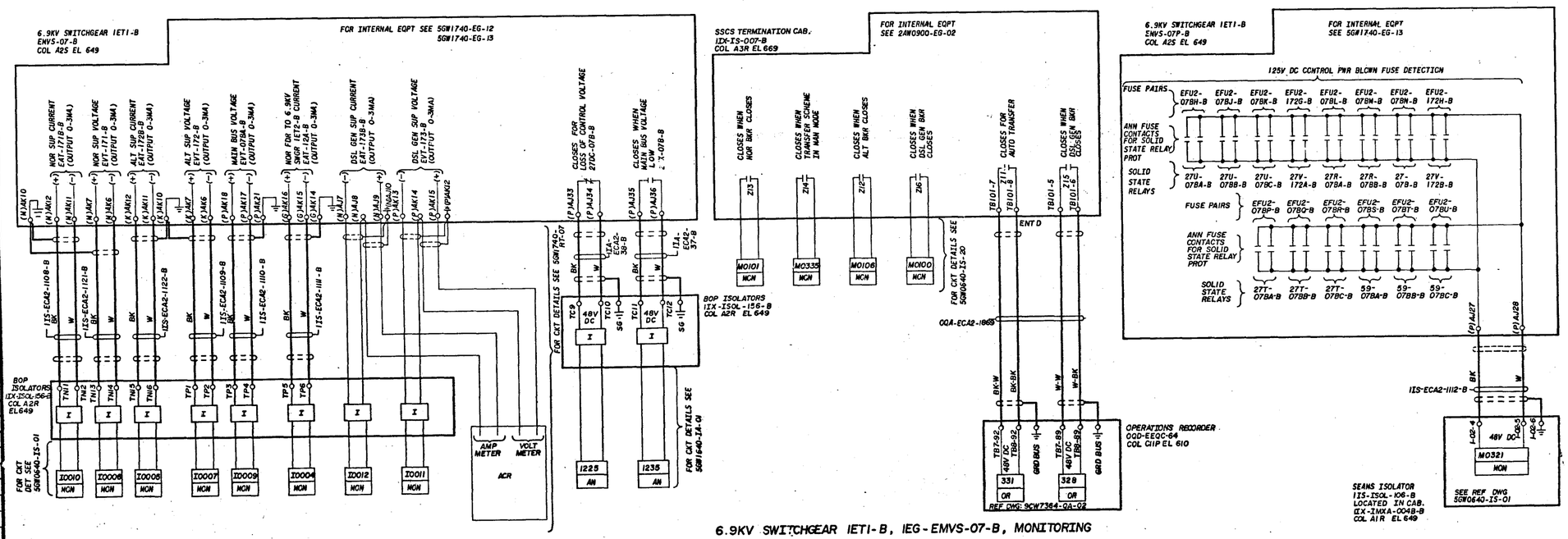

APERTURE CARD

Docket # 50-438
Control # 8202080064
Date 820202 of Document
REGULATORY DOCKET FILE

5	1146, S1	5-7-81	DELETED SEAMS MONITORING POINTS.	
4	773	12-11-79	CHANGED 62BF CONTACT TO ERLY CONTACT, & ADDED 52S AUX CONTACT.	
3	467	5-15-79	INCORPORATED THE NEW & MODIFIED DESIGN REQUIREMENTS FOR BUS TRANSFERS & VOLTAGE ANN POINTS.	
2	S1	1-31-79	ADDED SEAMS AND BOP ISOLATOR TERMINAL POINTS, BOP ISOLATOR SIGNAL PATHS & REF DWG NO. MINOR CHANGES.	
1	S1	7-19-78	ADDED MONITORING PT NO., OPERATIONS RCDR NOTATION AND TERMINAL PT, CABLE COLOR CODES AND MINOR REVISIONS PER S1.	

REV NO	ECN NO.	DATE	DSGN	DRWN	CHKD	SUPV	ENGR	INSP	SUBM	RECM	APPD	RE	RC	RM	RN

DSGN J.C. HILL
DRWN
CHKD L.P. WOODLEY
SUPV
INSP
ENGINEER

SCALE EXCEPT AS NOTED

GENERAL
UNIT 1

SYSTEM SCHEMATIC
6.9KV CLASS 1E AC AUX PWR DISTRIBUTION SYSTEM

BELLEFONTE NUCLEAR PLANT
TENNESSEE VALLEY AUTHORITY
DIVISION OF ENGINEERING DESIGN

Q

SUBMITTED | RECOMMENDED | APPROVED

KNOXVILLE 11-29-77 | 88 | E | 5GW1740-EG-09 R5

RECORD DRAWING AS CONSTRUCTED