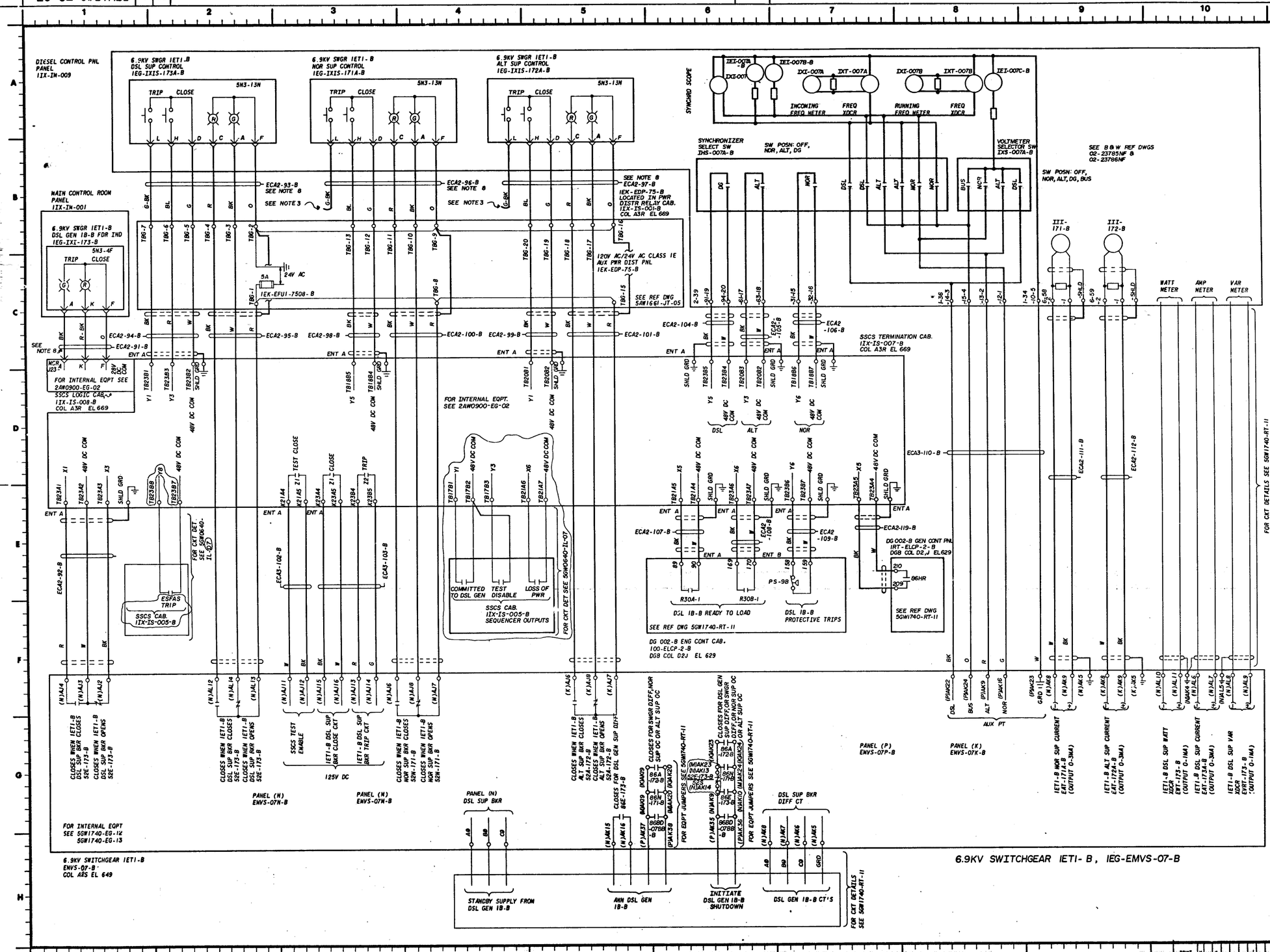

NOTES:
1. FOR GENERAL NOTES AND REFERENCE DRAWINGS SEE 5GW1740-EG-01.
2. FOR MONITORING SYSTEMS DEVELOPMENT SEE 5GW1740-EG-09.
3. TAPE G-BK CONDUCTOR TO PREVENT ANY POSSIBLE CURRENT PATH.

APERTURE CARD

Docket # 50-438
Control # 8202080064
Date 820202 of Document
REGULATORY DOCKET FILE

3	SI	5-18-79	JCH	JCH	LPW	COM	WLA	-	WLA	JLS	RMH			
MINOR CHANGES														
2	SI	1-31-79	JCH	JCH	LPW	COM	WLA	-	WLA	JLS	RMH			
MINOR CHANGES.														
1	SI	7-19-78	JCH	JCH	LPW	COM	WLA	-	WLA	JLS	RMH			
MINOR REVISIONS PER SI														

REV NO.	ECN NO.	DATE	DSGN	DRWN	CHKD	SUPV	ENGR	INSP	SUBM	RECM	APPD

DSGN J.C. HILL
DRWN J.W. JACKSON
CHKD L.P. WOODLEY
SUPV E.O. MASSEY
INSP
ENGINEER W.L. Aldredge

SCALE EXCEPT AS NOTED

GENERAL
UNIT 1

SYSTEM SCHEMATIC
6.9 KV CLASS IE AC AUX POWER DISTRIBUTION SYSTEM

BELLEFONTE NUCLEAR PLANT
TENNESSEE VALLEY AUTHORITY
DIVISION OF ENGINEERING DESIGN

Q

SUBMITTED	RECOMMENDED	APPROVED
W.L. Aldredge	[signature]	R.M. Hodges

KNOXVILLE 11-29-77 88 E 5GW1740-EG-07 R3

RECORD DRAWING AS CONSTRUCTED

THIS DRAWING IS UNDER CONFIGURATION CONTROL

PRINT H 3 1
SIZE F
BR OR PROJ ME EE CE AD CD ED MD SW BL PA
PRINTS REQD-R 1