FENOC
FirstEnergy Nuclear Operating Company

Perry Nuclear Power Plant
10 Center Road
Perry, Ohio 44081

Mark B. Bezilla
Vice President

440-280-5382
Fax: 440-280-8029

March 25, 2011
L-11-082

ASME OM Code ISTA-3200(a)

ATTN: Document Control Desk
U.S. Nuclear Regulatory Commission
Washington, DC 20555-0001

SUBJECT:
Perry Nuclear Power Plant
Docket Number 50-440; License Number NPF-58
Submittal of Perry Nuclear Power Plant Inservice Testing Programs

The American Society of Mechanical Engineers Operations and Maintenance (OM) Code, Subsection ISTA, "General Requirements," establishes requirements for inservice testing and examination of pumps, valves, pressure relief devices, and dynamic restraints (snubbers). ISTA-3100, "Test and Examination Program," requires preparation of test plans for these components, and ISTA-3200, "Administrative Requirements," requires the test plans to be filed with the regulatory authorities having jurisdiction at the plant site.

The Perry Nuclear Power Plant (PNPP) inservice testing program (ISTP) for pumps, valves, and pressure relief devices for the current 120-month interval is provided in Enclosure A, for information. The PNPP snubber test and examination program is maintained separately, and is provided in Enclosure B.

There are no regulatory commitments contained in this submittal. If there are any questions or if additional information is required, please contact Mr. Thomas A. Lentz, Manager – Fleet Licensing, at 330-761-6071.

Sincerely,

for Mark Bezilla

Mark B. Bezilla

Enclosures:
A. Perry Nuclear Power Plant Inservice Testing Program
B. Perry Nuclear Power Plant Snubber Program

cc: NRC Region III Administrator
NRC Resident Inspector Office
NRC Project Manager

A047
NRR

Enclosure A to Letter L-11-082

Perry Nuclear Power Plant Inservice Testing Program

(296 pages follow)

PERRY OPERATIONS MANUAL

TITLE: PUMP AND VALVE INSERVICE TESTING PROGRAM PLAN

REVISION: 13 EFFECTIVE DATE: 8-31-10

PREPARER: Bryan L. Andrie 8-16-10
/ Date

APPROVER: Scott Seman 8-19-10
/ Date

Pump and Valve Inservice Testing Program Plan

Table of Contents

Section	Title	Page
Preface		i through ix
1.0	INTRODUCTION	1-1
1.1	Purpose	1-1
1.2	Scope	1-1
1.3	Compliance	1-2
2.0	PUMP INSERVICE TESTING PROGRAM	2.1-1
2.1	General Information	2.1-1
2.1.1	Applicable Code	2.1-1
2.1.2	Pump Groups	2.1-1
2.1.3	Pump Program Tables	2.1-4
2.1.4	Measurement of Test Parameters	2.1-5
2.1.5	Allowable Ranges of Test Parameters	2.1-6
2.1.6	Instrument Accuracy	2.1-6
2.1.7	Pump Test Descriptions	2.1-6
2.1.8	Pump Surveillance Test Review	2.1-7
2.2	Relief Requests for the Pump Inservice Testing Program	2.2-1
2.3	Pump Testing System Index and Test Tables	2.3-1
2.3.1	Pump Testing System Index	2.3-1
2.3.2	Pump Test Table Nomenclature	2.3-2
2.3.3	Pump Test Table	2.3-3
2.4	Hydraulic Circuits, Test Methods, and Instrumentation	2.4-1
3.0	INSERVICE TESTING PROGRAM FOR VALVES	3.1-1
3.1	General Information	3.1-1
3.1.1	Applicable Code	3.1-1
3.1.2	Valve Program Tables	3.1-1
3.1.3	Measurement of Test Quantities	3.1-4
3.1.4	Allowable Ranges of Test Quantities	3.1-10
3.1.5	Instrument Accuracy	3.1-12
3.1.6	Post-Maintenance Testing	3.1-12
3.2	Cold Shutdown Justifications, Refueling Outage Justifications and Relief Requests for Inservice Valve Testing Program	3.2-1
3.3	Valve Testing Index	3.3-1
3.4	Valve Test Table	3.4-1
3.5	Valve Test Table Notes	3.5-1

Submittal History

L-08-347	Revision No. 11	Inservice Testing Program (ISTP) Plan for pump and valve testing submitted relief request for the 3rd Interval dated November 18, 2008. Relief Requests PR-1 and 2, VR-1, 2, 3, 4, 5 and 6.
L-08-353	Revision No. 11	Inservice Testing Program (ISTP) Plan for pump and valve testing submitted relief request for the 3rd Interval dated February 18, 2009. Relief Request PR-3.
L-09-117	Revision No. 11	Inservice Testing Program (ISTP) Plan for pump and valve testing response to request for additional information for the 3rd Interval dated May 28, 2009. Relief Requests PR-1, VR-3, 4, 5 and 6. Including re-submittal of VR-4 and withdrawal of VR-5.
L-09-160	Revision No. 11	Inservice Testing Program (ISTP) Plan for pump and valve testing response to request for additional information for the 3rd Interval dated June 9, 2009. Relief Request PR-3.
L-09-19	Revision No. 11	Withdrawal of VR-4 dated August 3, 2009.
R-09-242	Revision No. 11	Approved Safety Evaluation Report for Relief request PR-3 dated October 8, 2009.
R-09-250	Revision No. 11	Approved Safety Evaluation Report for Relief Requests PR-1, 2,
VR-1,		2, 3 and 6 dated October 22, 2009.

SCOPE OF REVISION:

Rev. 13 -

Page 1-2	Eliminated Commitments L01940 and L02466 and added L02424. (Notification 600628763) (CR CA 10-79344-01)
Page 2.4-1 Thru 2.4.15	Added the flow rate and differential pressure reference values based on MS-C-10-06-13, Engineering, ASME Audit. QFO FLT12010138. These values were added to the Hydraulic Circuits, Test Methods and Instrumentation table, for each pump listed. (Notification 600625199)
Page 3.4-33	1E12-F011A stroke times show an average delta of -0.90 seconds closed and -0.43 open. In 2007 the stroke times showed average delta of -0.10 seconds closed and 0.38 open. Through the evaluation it was discovered that Order 200007544 (closed 4/15/09) removed the valve operator, valve bonnet, lubricated the stem and reinstalled the valve operator, which provided the current stroke time closed and open reference values of (29.20 seconds closed) and (29.90 seconds open). The IST Program Engineer will accept the closed and open stroke times of (29.20 seconds closed) and (29.90 seconds open) obtained on 4/11/09 as a new baseline reference values for the close and open direction. SVI-E12-T2001 procedure change request has been submitted to update the procedure (refer to Ops Notification 600625333). Accepting this value will change the average deltas to -0.08 seconds closed and -0.36 seconds open, which will eliminate this valve from the concern list. (Notification 600625479)
Page 3.4-37	1E12-F004A stroke time closed shows an average delta of -2.66 seconds. In 2007 the stroke time closed and open showed average deltas of -1.72 seconds. Through the evaluation it was discovered that Order 200264931 (closed 4/15/09) removed the valve operator, refurbished the operator and reinstalled the valve operator, with the post maintenance test being performed within Order 200315867, which provided the current stroke time closed and open reference values of (112.50 seconds closed) and (115.50 seconds open). The IST Program Engineer will accept the closed and open stroke times of (112.50 seconds closed) and (115.50 seconds open) obtained on 4/11/09 as a new baseline reference values for the close and open direction. SVI-E12-T2001 procedure change request has been submitted to update the procedure (refer to Ops Notification 600625333). Accepting this value will change the average delta to 0.06 seconds closed and 0.04 seconds open, which will eliminate this valve from the concern list. (Notification 600625479)
Page 3.4-39	1E12-F023 stroke time closed and stroke time open shows an average delta of -3.40 seconds and -2.90 seconds respectively. In 2007 the stroke time closed and open showed average deltas of 0.40 seconds and -0.60 seconds respectively. Through the evaluation it was discovered that Order 200002286 (closed 4/15/09) removed the valve operator, change stem lubrication, installed and calibrated strain gauge and reinstalled the valve

operator, which provided the current stroke time closed and open reference values of (30.60 seconds closed) and (32.10 seconds open). The IST Program Engineer will accept the closed stroke and open times of (30.60 seconds closed) and (32.10 seconds open) obtained on 4/12/09 as a new baseline reference values for the close and open direction. SVI-E12-T2004A procedure change request has been submitted to update the procedure (refer to Ops Notification 600625167). Accepting this value will change the average delta to 0.00 seconds closed and open, which will eliminate this valve from the concern list. (Notification 600625479)

Page 3.4-40 1E12-F037A stroke times show an average delta of -1.00 seconds closed and -1.05 open. In 2007 the stroke times showed average delta of -0.30 seconds closed and -0.30 open. Through the evaluation it was discovered that Order 200002324 (closed 4/14/09) removed the valve operator, lubricated the stem, installed/calibrated a strain gauge and reinstalled the valve operator, which provided the current stroke time closed and open reference values of (58.30 seconds closed) and (58.40 seconds open). The IST Program Engineer will accept the closed and open stroke times of (58.30 seconds closed) and (58.40 seconds open) obtained on 4/12/09 as a new baseline reference values for the close direction. SVI-E12-T2004A procedure change request has been submitted to update the procedure (refer to Ops Notification 600625167). Accepting this value will change the average deltas to 0.00 seconds closed and 0.00 seconds open, which will eliminate this valve from the concern list. (Notification 600625479)

Page 3.4-56 1E51-F068 stroke time closed and stroke time open shows an average delta of -1.34 seconds and -2.12 seconds respectively. In 2007 the stroke time closed and open showed average deltas of -2.90 seconds and -3.25 seconds respectively. In 2006 the stroke time closed and open showed average deltas of -2.60 seconds and -2.67 seconds respectively. In 2005 the stroke time closed and open showed average deltas of -3.13 seconds and -3.20 seconds respectively. In 2004 the stroke time closed and open showed average deltas of -2.75 seconds and -3.00 seconds respectively. In 2003 the stroke time closed and open showed average deltas of -2.52 and -2.75 seconds and in 2002 the stroke time closed and open showed average deltas of -1.9 seconds and N/A (not stroked open until late 2002). Through the evaluation it was discovered that Order 200328428 (closed 5/18/09) removed the valve operator, repaired valve disk due to Local Leak Rate Test (LLRT) failure and reinstalled the valve operator, which provided the current stroke time closed and open reference values of (39.60 seconds closed) and (40.10 seconds open). The IST Program Engineer will accept the closed stroke time of (39.60 seconds closed) and (40.10 seconds open) obtained on 5/12/09 as a new baseline reference values for the close and open direction. SVI-E51-T2001 and SVI-E51-T1272 procedure change requests have been submitted to update

the procedures (refer to Ops Notification 600625364). Accepting this value will change the average delta to 0.57 seconds closed and -0.47 seconds open, which will eliminate this valve from the concern list. (Notification 600625479)

Page 3.4-64 1G33-F039 stroke time closed shows an average delta of -0.83 seconds. In 2007 the stroke time closed showed an average delta of -0.10 seconds. Through the evaluation it was discovered that Order 200360838 (closed 5/11/09) removed the valve operator, repaired valve disk due to Local Leak Rate Test (LLRT) failure and reinstalled the valve operator, which provided the current stroke time closed reference value of (20.70 seconds closed). The IST Program Engineer will accept the closed stroke time of (20.70 seconds closed) obtained on 4/23/09 as a new baseline reference value for the close direction. SVI-G33-T2003 procedure change request has been submitted to update the procedure (refer to Ops Notification 600625365). Accepting this value will change the average delta to 0.00 seconds closed, which will eliminate this valve from the concern list. (Notification 600625479)

1G33-F040 stroke time closed shows an average delta of -0.70 seconds. In 2007 the stroke time closed showed an average delta of -0.10 seconds. Through the evaluation it was discovered that Order 200360835 (closed 5/11/09) removed the valve operator, repaired valve disk due to Local Leak Rate Test (LLRT) failure and reinstalled the valve operator, which provided the current stroke time closed reference value of (20.50 seconds closed). The IST Program Engineer will accept the closed stroke time of (20.50 seconds closed) obtained on 4/21/09 as a new baseline reference value for the close direction. SVI-G33-T2003 procedure change request has been submitted to update the procedure (refer to Ops Notification 600625365). Accepting this value will change the average delta to 0.00 seconds closed, which will eliminate this valve from the concern list. (Notification 600625479)

Page 3.4-90 1P11-F060 stroke times show an average delta of -1.10 seconds closed and -0.01 open. In 2007 the stroke times showed average delta of -0.76 seconds closed and 0.62 open. Through the evaluation it was discovered that Order 200323587 (closed 4/9/09) removed the valve operator, replaced valve disk seal, installed a refurbished valve operator, with the post maintenance test being performed per Order 200342634, which provided the current stroke time closed and open reference values of (28.10 seconds closed) and (28.70 seconds open). The IST Program Engineer will accept the closed and open stroke times of (28.10 seconds closed) and (28.70 seconds open) obtained on 4/13/09 as a new baseline reference values for the close and open direction. SVI-P11-T2002 procedure change request has been submitted to update the procedure (refer to Ops Notification 600625369). Accepting this value will change the average deltas to 0.08 seconds closed and 0.12

seconds open, which will eliminate this valve from the concern list. (Notification 600625479)
1P11-F080 stroke times show an average delta of -0.53 seconds closed and -0.61 open. In 2007 the stroke times showed average delta of 0.18 seconds closed and 0.10 open. Through the evaluation it was discovered that Order 200194357 (closed 4/14/09) removed the valve operator, installed a refurbished valve operator, which provided the current stroke time closed and open reference values of (27.90 seconds closed) and (27.90 seconds open). The IST Program Engineer will accept the closed and open stroke times of (27.90 seconds closed) and (27.90 seconds open) obtained on 4/13/09 as a new baseline reference values for the close direction. SVI-P11-T2002 procedure change request has been submitted to update the procedure (refer to Ops Notification 600625369). Accepting this value will change the average deltas to 00.07 seconds closed and -0.12 seconds open, which will eliminate this valve from the concern list. (Notification 600625479)

Page 3.4-94 0P42-F255B stroke time closed shows an average delta of -0.70 seconds. In 2007 the stroke time closed showed an average delta of 1.82 seconds. Through the evaluation it was discovered that Order 200292547 (closed 3/11/09) removed the valve operator, replaced the valve and the valve operator, which provided the current stroke time closed reference value of (29.30 seconds closed). The IST Program Engineer will accept the closed stroke time of (29.30 seconds closed) obtained on 3/5/09 as a new baseline reference value for the close direction. SVI-P42-T2002 procedure change request has been submitted to update the procedure (refer to Ops Notification 600625332). Accepting this value will change the average delta to 0.00 seconds closed, which will eliminate this valve from the concern list. (Notification 600625479)

Page 3.4-97 1P43-F055 stroke time closed shows an average delta of -1.30 seconds. In 2007 the stroke time closed showed an average delta of 0.20 seconds. Through the evaluation it was discovered that Order 200173854 (closed 4/1/09) removed the valve operator, replaced motor and reinstalled the valve operator, with the post maintenance retest being performed per Order 200261982, which provided the current stroke time closed reference value of (28.60 seconds closed). The IST Program Engineer will accept the closed stroke time of (28.60 seconds closed) obtained on 4/13/09 as a new baseline reference value for the close direction. SVI-P43-T2001 procedure change request has been submitted to update the procedure (refer to Ops Notification 600625366). Accepting this value will change the average delta to 0.00 seconds closed, which will eliminate this valve from the concern list. (Notification 600625479)
1P43-F140 stroke time closed shows an average delta of -1.50 seconds. In 2007 the stroke time closed showed an average delta of 0.00 seconds. Through the evaluation it was discovered that Order 200188423 (closed 4/3/09) removed the valve operator, replaced motor and reinstalled

the valve operator, with the post maintenance retest being performed per Order 200262062, which provided the current stroke time closed reference value of (27.90 seconds closed). The IST Program Engineer will accept the closed stroke time of (27.90 seconds closed) obtained on 4/13/09 as a new baseline reference value for the close direction. SVI-P43-T2001 procedure change request has been submitted to update the procedure (refer to Ops Notification 600625366). Accepting this value will change the average delta to 0.00 seconds closed, which will eliminate this valve from the concern list. (Notification 600625479)

1P43-F215 stroke time closed shows an average delta of -0.80 seconds. In 2007 the stroke time closed showed an average delta of 0.10 seconds. Through the evaluation it was discovered that Order 200187071 (closed 4/1/09) removed the valve operator, replaced motor and reinstalled the valve operator, with the post maintenance retest being performed per Order 200261981, which provided the current stroke time closed reference value of (28.10 seconds closed). The IST Program Engineer will accept the closed stroke time of (28.10 seconds closed) obtained on 4/13/09 as a new baseline reference value for the close direction. SVI-P43-T2001 procedure change request has been submitted to update the procedure (refer to Ops Notification 600625366). Accepting this value will change the average delta to 0.00 seconds closed, which will eliminate this valve from the concern list. (Notification 600625479)

Page 3.4-98 1P45-F140 stroke time closed and stroke time open shows an average delta of 2.35 seconds and 2.23 seconds respectively. In 2007 the stroke time closed and open showed average deltas of 1.22 seconds and 1.10 seconds respectively. Through the evaluation it was discovered that Order 200327144 (closed 3/30/09) removed the valve operator, replaced valve disk due to leakage and reinstalled the valve operator, which provided the current stroke time closed and open reference values of (29.90 seconds closed) and (29.80 seconds open). The IST Program Engineer will accept the closed stroke time of (29.90 seconds closed) and (29.80 seconds open) obtained on 3/27/09 as a new baseline reference values for the close and open direction. SVI-P45-T2003 procedure change request has been submitted to update the procedure (refer to Ops Notification 600625367). Accepting this value will change the average delta to -0.02 seconds closed and -0.05 seconds open, which will eliminate this valve from the concern list. (Notification 600625479)

Page 3.4-106 1P51-F150 stroke time closed shows an average delta of 0.81 seconds. In 2007 the stroke time closed showed an average delta of 0.04 seconds. Through the evaluation it was discovered that Order 200267408 (closed 3/24/09) refurbished the air operated valve actuator, which provided the current stroke time closed reference value of (9.70 seconds closed). The IST Program Engineer will accept the closed stroke time of (9.70 seconds closed) obtained on 4/15/09 as a new baseline reference value for

the close direction. SVI-P51-T2001 procedure change request has been submitted to update the procedure (refer to Ops Notification 600625368). Accepting this value will change the average delta to -0.28 seconds closed, which will eliminate this valve from the concern list. (Notification 600625479)

Page - Various Removed all reference to NUREG-1482, as NUREG-1946 is currently out for draft comment and will totally replace NUREG-1482, Revision 1, that was in use at Perry.

1.0 INTRODUCTION

1.1 Purpose

This Inservice Testing Program (ISTP) plan identifies the pumps, valves, and pressure relief devices that are included in the IST Program. The ISTP plan identifies the inservice tests to be performed on the components in the program in order to verify their operational readiness.

1.2 Scope

The IST Program applies to those Inservice Inspection (ISI) Safety Class 1, 2, 3, MC and Optional pumps and valves required to bring the reactor to a safe shutdown condition, maintain the safe shutdown condition and mitigate the consequences of an accident. The program also applies to overpressure protection devices for systems or portions of systems that perform one or more of these functions. The ISI boundary classifications are determined in accordance with the Inservice Examination Program (ISEP) plan. The ISEP plan identifies the applicable ISI Safety Classifications on the ISI - 305 series drawings. The IST program was developed using the ISI safety classification boundaries and the following documents:

Title 10, Code of Federal Regulations, Part 50, Paragraph 50.55a(f) and (g).

American Society of Mechanical Engineers (ASME) OM Code-2001 Edition, Code of Operation and Maintenance of Nuclear Plants, with Addenda through OMb-2003.

ASME OM Code-2001 Edition through OMb-2003 Addenda, Appendix I, Inservice Testing of Pressure Relief Devices in Light Water Reactor Nuclear Power Plants.

ASME OM Code-2001 Edition through OMb-2003 Addenda, Appendix II, Check Valve Condition Monitoring Program.

Generic Letter 89-04, "Guidance on Developing Acceptable Inservice Testing Programs" and "Minutes of the Public Meetings on Generic Letter 89-04".

NRR Safety Evaluations and their associated TER's.

Technical Specifications, Perry Nuclear Power Plant.

Updated Safety Analysis Report, Perry Nuclear Power Plant.

The satisfactory testing of individual components (pumps/valves) in accordance with the plan shall verify operational readiness of each component's safety function(s). A failure to meet the scheduled surveillance frequency or acceptance criteria shall place the component in an inoperable status. Further consideration must be given to verify the system or subsystem status and Limiting Condition of Operation. Components placed in an inoperable status because of exceeding an acceptance criteria must undergo a repair, replacement, or corrective maintenance and be satisfactorily retested, or have an evaluation of acceptability performed. Components placed in an inoperable status because of exceeding the scheduled surveillance frequency must be satisfactorily tested to return the component to an operable status. Component operability based on analysis shall have the results of the analysis recorded in the record of tests.

1.3 Compliance

The Perry Nuclear Power Plant (PNPP) ISTP Plan for the 3rd 120 month inspection interval will be in effect from 18 May, 2009 through 17 May 2019 and will be updated in accordance with the requirements of 10CFR50.55a(f) and Technical Specification 5.5.6.

This document outlines the inservice testing program based on the requirements of the ASME OM Code-2001 Edition, with Addenda through OMb-2003.

If this revised Inservice Testing (IST) Program Plan for the site conflicts with site technical specifications a technical specification amendment shall be submitted to conform the technical specification to the revised IST program [10CFR50.55a(f)(5)(ii)]. Until approval of the technical specification amendment the most limiting requirement shall be met.

When performing 120 month update all Measuring and Test Equipment specification sheets shall be verified to meet current code requirements for range and accuracy (reference CR 04-03936). The Code of record for the Third 10-year interval has a change for required instrument accuracy. Instruments used for measuring pressure must have a minimum required instrument accuracy of ± 0.5% when performing the biennial Comprehensive pump test or when testing to the alternative requirements specified in Code Case OMN-18 as requested per relief request PR-3, subsequent to NRC approval.

Commitments: L02424

2.0 PUMP INSERVICE TESTING PROGRAM

2.1 General Information

2.1.1 Applicable Code

This testing program for ISI Class 1, 2, 3 and Optional pumps meets the requirements of the ASME OM Code-2001 Edition/2003 Addenda, Subsection ISTA, General Requirements, and Subsection ISTB, Inservice Testing of Pumps in Light-Water Reactor Nuclear Power Plants. Where these requirements are determined to be impractical, specific requests for relief have been written and included in Section 2.2.

2.1.2 Pump Groups

Group A Pumps

The ASME OM Code defines Group A pumps as those pumps that are operated continuously or routinely during normal operation, cold shutdown, or refueling operations. PNPP considers the following pumps as being categorized as Group A as well as justification for grouping. Justification does not necessarily consider all safety related functions.

- Residual Heat Removal Pumps A and B (1E12-C002A, B)

  The RHR Pumps operate within the A(B) RHR Loops to provide four main functions. The Residual Heat Removal (Shutdown Cooling) mode operates in a closed loop to remove decay and sensible heat from the reactor primary system. In the Low Pressure Coolant Injection (LPCI) mode, the RHR Pumps provide water from the Suppression Pool to the reactor vessel to cover the core. The Suppression Pool Cooling and Containment Spray Cooling modes are part of the Containment Heat Removal System and function to prevent excessive containment pressures and temperatures during post accident conditions.

- Residual Heat Removal Waterleg Pump (1E12-C003)

  This waterleg pump maintains the discharge piping of RHR Pumps B and C full to reduce the time lag from pump start to actual injection of water and to eliminate the possibility of water hammer on pump start. 1E12-C003 also provides a water source for the Feedwater Leakage Control System.

- Low Pressure Core Spray Waterleg Pump (1E21-C002)

  This waterleg pump maintain the discharge piping of RHR Pump A and the LPCS pumps full to reduce the time lag from pump start to actual injection of water and to eliminate the possibility of water hammer on pump start. 1E21-C002 also provides a water source for the Feedwater Leakage Control System.

- High Pressure Core Spray Waterleg Pump (1E22-C003)

  This waterleg pump provides the keepfill function for the HPCS Pump by maintaining the discharge piping full to reduce the time lag from pump start to actual injection of water and to eliminate the possibility of water hammer on pump start.

- Reactor Core Isolation Cooling Waterleg Pump (1E51-C003)

  This waterleg pump provides the keepfill function for the RCIC Pump by maintaining the discharge piping full to reduce the time lag from pump start to actual injection of water and to eliminate the possibility of water hammer on pump start.

- Fuel Pool Cooling and Cleanup Pumps (0G41-C003A, B)

  The Fuel Pool Cooling and Cleanup Pumps remove decay heat from the stored fuel assemblies, thereby maintaining the pool at the required temperature, maintaining pool water level, and the removal of radioactive materials from the pool.

- Emergency Closed Cooling Water Pumps (1P42-C001A, B)

  The ECC Pumps provide a reliable source of cooling water to safety-related components required for certain modes of normal reactor operation, as well as for accident conditions and loss of normal auxiliary power.

- Emergency Service Water Pumps (1P45-C001A, B)

  The ESW Pumps A(B) provide a reliable source of cooling water to the A(B) RHR, A(B) Diesel Generator, A(B) ECC, and Fuel Pool Cooling (via Unit 2 ECC) heat exchangers.

- Control Complex Chilled Water Pumps (0P47-C001A, B)

  The CCCW Pumps provide mechanically chilled water to the cooling coils of the air handling units serving the control complex during normal operation and post-accident conditions.

Group AB Pumps

The ASME OM Code defines Group B pumps as those pumps in standby systems that are not operated routinely except for testing. PNPP considers the following pumps as meeting categorization requirements as Group B as well as justification for grouping. However, the following pumps have been categorized as Group AB to impose Group A testing requirements commensurate with Code Case OMN-18 as addressed per relief request PR-3, pending NRC approval.

- Standby Liquid Control Pumps (1C41-C001A, B)

  The Standby Liquid Control (SLC) Pumps provide a backup means of reactivity control by injecting a neutron absorbing solution (sodium pentaborate) into the reactor vessel.

- Residual Heat Removal Pump C (1E12-C002C)

  RHR Pump C operates within the C RHR Loop to provide the Low Pressure Coolant Injection (LPCI) function only. In the LPCI mode, RHR Pump C provides water from the Suppression Pool to the reactor vessel to cover the core.

- Low Pressure Core Spray Pump (E21-C001)

  The LPCS Pump delivers water over the core at relatively low reactor pressures. The LPCS Pump provides inventory makeup and spray cooling following a large break or inventory makeup following a small break and ADS initiation.

- High Pressure Core Spray Pump (E22-C001)

  The HPCS Pump delivers water to the core over the entire range of system operating pressures. The HPCS Pump provides inventory makeup following a small break or inventory makeup and spray cooling following a large break.

- Reactor Core Isolation Cooling Pump (1E51-C001

  The RCIC pump assures that sufficient reactor water inventory is maintained in the reactor vessel to permit adequate core cooling to take place under isolated reactor vessel and/or loss of feedwater conditions

- HPCS Emergency Service Water Pump (1P45-C002)

  The HPCS ESW Pump provides a reliable source of cooling water to the HPCS Diesel Generator heat exchanger and the HPCS room cooler. The pump has only one (1) mode of operation and that is to support the HPCS (Division 3)

Diesel Generator Hx and HPCS Pump Room Cooler. Therefore, the pump is only started and ran for testing of itself, as a support system to the diesel testing, and as a support system for HPCS pump testing.

- Diesel Fuel Oil Transfer Pumps Div. 1, 2 & 3 (1R45-C001A, B, C and 1R45-C002A, B & C)

  The purpose of the Fuel Oil Transfer Pumps is to transfer fuel oil from the main storage tanks to the day tanks to support long term engine operation during accident conditions.

NOTE: PNPP has requested the use of Code Case OMN-18 via Relief Request PR-3. If approved, those pumps that can be tested to within ± 20% of design flow during the quarterly pump tests will not receive a biennial Comprehensive Pump Test (CPT). The pumps will continue to be tested on a quarterly frequency using instrumentation that satisfies the accuracy requirements for Comprehensive or Preservice pump testing as specified in Table ISTB-3500-1. Pumps that otherwise satisfy the requirements for Group B classification shall be tested commensurate with Group A test requirements and categorized as Group AB pumps. A biennial Comprehensive test shall not be performed.

2.1.3 Pump Program Tables

The tables in Section 2.3 list all pumps included in the PNPP IST Program. Data contained in these tables identifies those pumps subject to inservice testing, the inservice test quantities to be measured, the inservice testing frequency, and any applicable remarks. The column headings are listed and explained below:

PUMP IDENTIFICATION

1. SYSTEM/GROUP: The system of which the pump is a component and the Group category of the pump(s).

2. PUMP NUMBER: The pump SAP Functional Location number.

3. TEST INST. NO.: The Surveillance Instruction (SVI) or Periodic Test Instruction (PTI) number in which the Inservice Pump Test is accomplished.

4. ISI CLASS: The ISI safety classification (i.e., 1, 2, 3 or Optional) of the pump.

5. FREQ.: The frequency is the periodicity in which pump test must be accomplished.

6. MEASURED PARAMETERS: The parameters to be measured during the Quarterly and CPT Inservice Pump Tests.

IST REQUIREMENTS - PUMP SPEED, DIFFERENTIAL PRESSURE, DISCHARGE PRESSURE, FLOW RATE, VIBRATION:

When the symbol "X" appears in a particular measured parameter column, that quantity will be measured during inservice testing in accordance with the OM Code. If a modified test is planned or a test is being waived, a number, which refers to a Pump Test Table Note (Section 2.3.3), shall appear in the measured parameter column. Requests for relief are identified with the letter "PR" under the measured parameter column in the test tables.

2.1.4 Measurement of Test Parameters

SPEED: Per ISTB-5121(a), 5122(a) and 5123(a), the pump shall be operated at nominal motor speed for constant speed drives and at a speed adjusted to the reference point (±1%) for variable speed drives.

DIFFERENTIAL PRESSURE: Per ISTB-3520(b), differential pressure will be determined by calculating the difference between suction and discharge pressure measurements or by direct differential pressure measurement. Where differential is not directly determined (i.e., suction pressure or suction lift calculated from suction bay level), the method is described in Section 2.4.

DISCHARGE PRESSURE: Per Table ISTB-5300-2, discharge pressure will be measured in lieu of differential pressure for positive displacement pumps. Per Table ISTB-5300-2, discharge pressure is not required to be measured for positive displacement pumps during the Group B pump test.

FLOW RATE: Per ISTB-3550, flow rate will be measured using a flow rate meter installed in or on the hydraulic circuit. Where flow rate is not directly measured (i.e., flow rate calculated from flow orifice dP measurement), the method is described in Section 2.4. External recirculated flow is not required to be measured if it is not practical to isolate, has a fixed resistance, and has been evaluated to not have a substantial effect on the results of the test.

NOTE: Per Tables ISTB-5100-1, 5200-1 and 5300-2, vibration measurement is not required during the Group B pump test, but is required during the Group A test and Comprehensive pump test.

VIBRATION: Pump vibration will be measured at the locations described below, dependent upon the type of pump. Pump vibration measurements will be in units of velocity (inches per second), unless otherwise noted in the table. The vibration measurement locations are permanently marked on the pump/motor with a "V", "V1" "H" "H1", "A" or "A1".

Centrifugal Pumps: Per ISTB-3540(a), measurements shall be taken in a plane approximately perpendicular to the rotating shaft in two approximately orthogonal directions on each accessible pump bearing housing, and in the axial direction on each accessible pump thrust bearing housing.

Vertical Line Shaft Pumps: Per ISTB-3540(b), measurements shall be taken on the upper motor bearing housing in three approximately orthogonal directions, one of which is the axial direction.

Reciprocating Pumps: Per ISTB-3540(c), measurements shall be taken on the bearing housing of the crankshaft, approximately perpendicular to both the crankshaft and the line of plunger travel.

2.1.5 Allowable Ranges for Test Parameters

The allowable ranges specified in Tables ISTB-5100-1, 5200-1 or 5300-2, as appropriate, will be used. Should a measured test quantity fall outside the allowable range, action will be taken in accordance with ISTB-6200.

2.1.6 Instrument Accuracy

Allowable instrument accuracies are given in Table ISTB-3500-1, Required Instrument Accuracy. If the accuracies of the plant installed instruments are not acceptable, temporary instruments meeting the requirements of Table ISTB-3500-1 will be used. When determining differential pressure by calculating the difference between individual suction and discharge pressure measurements, the range and accuracy of an individual instrument may be greater than allowed as long as the overall determination of differential pressure can be shown to be better than the Code required accuracy. Digital instruments may be selected such that the reference value does not exceed 90% of the calibrated range per Code Case OMN-6 (Refer to relief request PR-2).

2.1.7 Pump Test Descriptions

Descriptions of pump testing hydraulic circuits, testing methods, and specific instrumentation are given in Section 2.4. The descriptions state which measured parameter is the fixed reference value (flow rate, differential pressure, or discharge pressure) and its value. Calculation methods for any parameters not determined directly are also included. Any cases where individual pressure instruments do not meet accuracy requirements, but the overall differential pressure determination is acceptable, are justified within the instrumentation descriptions.

2.1.8 Pump Surveillance Test Review

All test data shall be analyzed within a reasonable period of time after completion of test. This analysis is satisfied by the Unit Supervisor's signature on the Perry Plant Work Order Surveillance Sheet or the Data Package Cover Sheet upon completion of the pump surveillance test. This analysis is acceptable since all required acceptance criteria is available within each individual pump surveillance test. Further analysis will be performed by the Inservice Test Program Owner or his alternate within a reasonable time following the Unit Supervisor review, generally within 5 to 7 working days.

Perry Nuclear Power Plant Unit 1
10 CFR 50.55a Request Number PR-1, Rev 0
Page 1 of 2

Proposed Alternative
in Accordance with 10 CFR 50.55a(a)(3)(i)

--Alternative Provides Acceptable Level of Quality and Safety--

1. ASME Code Component(s) Affected

1E12-C003, RHR Waterleg Pump (Class 2)
1E21-C002, LPCS Waterleg Pump (Class 2)
1E22-C003, HPCS Waterleg Pump (Class 2)
1E51-C003, RCIC Waterleg Pump (Class 2)

Waterleg pumps maintain the discharge piping of safety-related systems full to expedite flow during initiation, and minimize the likelihood of system damage due to water hammer.

2. Applicable Code Edition and Addenda

ASME OM Code-2001, with Addenda through OMb-2003

3. Applicable Code Requirements

ISTB-3400; Frequency of Inservice Tests. An inservice test shall be run on each pump as specified in Table ISTB-3400-1. Table ISTB-03400-1 specifies that a Group A pump test shall be performed on a quarterly frequency.

ISTB-3300(e)(2); Reference values shall be established within ± 20% of pump design flow for a Group A test, if practicable. If not practicable, the reference point flow rate shall be established at the highest practical flow rate.

4. Reason for Request

The waterleg pumps are designed to remain in service during operation at power to ensure the emergency standby systems are maintained pressurized to reduce the likelihood of water hammer. The waterleg pumps run continuously, with flow established through a recirculation line, in order to provide enough head to keep the applicable systems discharge piping full to the highest elevation. During safety-related pump testing, the waterleg pump normal discharge path must be redirected through drain lines to provide enough flow to establish the selected code reference values. This requires taking the system out of service and racking out safety-related pump breakers for the Residual Heat Removal (RHR) system, the Low Pressure Core Spray (LPCS) system, and the High Pressure Core Spray (HPCS) system, or isolating the Reactor Core Isolation Cooling (RCIC) system pump to prevent system damage due to water hammer or cavitation upon receipt of an auto actuation signal.

Quarterly full flow testing of the listed safety-related waterleg pumps would result in the inoperability of its associated Emergency Core Cooling System without a compensating increase in the level of quality or safety.

5. Proposed Alternative and Basis for Use

The waterleg pumps shall be monitored on a quarterly basis by observing pump discharge pressure and bearing vibration. These parameters will be evaluated to adequately assess the pump's performance. The pumps will be full flow tested each refueling outage in conjunction with the comprehensive pump test performed in accordance with the requirements specified in ISTB-5123 Comprehensive Test Procedure.

All of these pumps have adequate margin beyond the capacity required for them to fulfill their function. Using the provisions of this relief request as an alternative to the requirements of ISTB-3400 and ISTB-3300(e)(2) provides a reasonable alternative to the code requirements. The proposed alternative provides an acceptable level of quality and safety for monitoring the pumps and assuring that the pumps are capable of performing their safety function.

6. Duration of Proposed Alternative

The proposed alternative identified in this relief request shall be utilized during the Third Ten-Year IST Interval.

7. Precedent

Perry Nuclear Power Plant, Docket No. 50-440, Safety Evaluation Report (SER) dated August 9, 1999, "Safety Evaluation of the Inservice Testing Program Second Ten-Year Interval for Pumps and Valves - Perry Nuclear Power Plant, (TAC No. MA3328)." Previously approved as PR-2 in the aforementioned SER. Refer to Attachment 2, Technical Evaluation Report, **Section 2.2.**

8. Reference

Generic Letter 89-04, "Guidance on Developing Acceptable Inservice Testing Programs," Attachment 1, Position 9, "Pump Testing using Minimum-flow Return Line With or Without Flow Measuring Devices."

Proposed Alternative
in Accordance with 10 CFR 50.55a(a)(3)(i)

--Alternative Provides Acceptable Level of Quality and Safety--

1. ASME Code Component(s) Affected

1C41-C001A & B, Standby Liquid Control Pumps (Class 2)
1E12-C002A, B & C, Residual Heat Removal Pumps (RHR) (Class 2)
1E12-C003, RHR Waterleg Pump (Class 2)
1E21-C001, Low Pressure Core Spray Pump (LPCS) (Class 2)
1E21-C002, LPCS Waterleg Pump (Class 2)
1E22-C001, High Pressure Core Spray Pump (HPCS) (Class 2)
1E22-C003, HPCS Waterleg Pump (Class 2)
1E51-C001, Reactor Core Isolation Cooling Pump (RCIC) (Class 2)
1E51-C003, RCIC Waterleg Pump (Class 2)
G41-C003A & B, Fuel Pool Cooling and Cleanup Pumps (Class 3)
1P42-C001A & B, Emergency Closed Cooling Pumps Class 3)
1P45-C001A & B and C002, Emergency Service Water Pumps (Class 3)
P47-C001A & B, Control Complex Chilled Water Pumps (Class 3)
1R45-C001A, B, C & C002A, B, C, Standby Diesel Generator Fuel Oil Pumps (Class 3)

2. Applicable Code Edition and Addenda

ASME OM Code-2001, with Addenda through OMb-2003

3. Applicable Code Requirements

ISTA-3130, "Application of Code Cases," ISTA-3130(b) states, Code Cases shall be applicable to the edition and addenda specified in the test plan.

ISTB-3510(b)(2); Digital Instruments shall be selected such that the reference value does not exceed 70% of the calibrated range of the instrument.

4. Reason for Request

The ASME Code committees have approved Code Case OMN-6, "Alternative Rules for Digital Instruments," which was included in the OMa-1999. The Nuclear Regulatory Commission has unconditionally approved the use of this code case as reflected in Regulatory Guide 1.192, "Operation and Maintenance Code Case Acceptability, ASME OM Code," June 2003. This code case allows owners to use digital instruments such that the reference value does not exceed 90% of the calibrated range of the instrument. The Code of record for the Third Ten-Year Inservice Testing (IST) interval is OM Code-2001 Edition with Addenda through OMb-2003. As stated in Regulatory Guide (RG) 1.192, the applicable Code for Code Case OMN-6 is OMa-1999. Perry Nuclear Power Plant (PNPP) is requesting the use of Code Case OMN-6 because the applicable edition of the code is other than the code edition/addenda specified as the code of record for the Third Ten-Year Interval.

5. Proposed Alternative and Basis for Use

In lieu of the digital instruments requirements specified in ISTB-3510(b)(2), PNPP proposes to utilize the alternative rules for digital instruments specified in Code Case OMN-6. Whereas, digital instruments shall be selected such that the reference value does not exceed 90% the calibrated range of the instrument.

Using the provisions of this relief request as an alternative to the requirements of ISTB-3510(b)(2) provides a reasonable alternative to the code requirements based on the determination that the proposed alternative provides an acceptable level of quality and safety as recognized by RG 1.192.

6. Duration of Proposed Alternative

The proposed alternative identified in this relief request shall be utilized during the Third Ten-Year IST Interval.

7. Precedent

Perry Nuclear Power Plant, Docket No. 50-440, Safety Evaluation Report (SER) dated March 31, 1999, Safety Evaluation of the Inservice Testing Program Relief Requests for the Second Ten-Year Interval - Perry Nuclear Power Plant, (TAC No. MA3328). Previously approved as PR-6 in the aforementioned SER.

Regulatory Guide 1.192, "Operation and Maintenance Code Case Acceptability, ASME OM Code", June 2003, Table 1, "Acceptable OM Code Cases."

8. Reference

Code Case OMN-6, Alternative Rules for Digital Instruments.

Proposed Alternative
in Accordance with 10 CFR 50.55a(a)(3)(i)

--Alternative Provides Acceptable Level of Quality and Safety--

1. ASME Code Component(s) Affected

Pumps	Code Class
1C41-C001A & B, Standby Liquid Control	2
1E12-C002A, B, & C, Residual Heat Removal	2
1E21-C001, Low Pressure Core Spray	2
1E22-C001, High Pressure Core Spray (HPCS)	2
1E51-C001, Reactor Core Isolation Cooling	2
G41-C003A & B, Fuel Pool Cooling and Cleanup	3
1P42-C001A & B, Emergency Closed Cooling Water	3
1P45-C001A & B, Emergency Service Water	3
1P45-C002, HPCS Emergency Service Water	3
P47-C001A & B, Control Complex Chilled Water	3
1R45-C001A, B, & C, Fuel Oil Transfer #1	3
1R45-C002A, B, & C, Fuel Oil Transfer #2	3

2. Applicable Code Edition and Addenda

ASME OM Code-2001, with Addenda through OMb-2003

3. Applicable Code Requirements

ISTB-2000 defines operating criteria for designating Group A and Group B pumps.

ISTB-3000, "General Testing Requirements" and Table ISTB-3000-1, "Inservice Test Parameters," define and compare parameters (e.g., pressure, flow rate, vibration) measured during Group A, Group B, and Comprehensive Tests.

ISTB-3400, "Frequency of Inservice Tests," states that an inservice test shall be run on each pump as specified in Table ISTB-3400-1. This table requires a Group A or Group B Test to be performed quarterly and a Comprehensive Test to be performed biennially.

Table ISTB-3500-1 defines the required instrument accuracy for Group A, Group B, and Comprehensive Tests.

Table ISTB-5100-1 defines the required acceptance criteria for Group A, Group B, and Comprehensive Tests (Centrifugal Pumps).

Table ISTB-5200-1 defines the required acceptance criteria for Group A, Group B, and Comprehensive Tests (Vertical Line Shaft Pumps).

Table ISTB-5300-2 defines the required acceptance criteria for Group A, Group B, and Comprehensive Tests (Reciprocating Positive Displacement Pumps).

4. Reason for Request

The ASME OM Code Committee has established Code Case OMN-18, "Alternate Testing Requirements for Pumps Tested Quarterly within ± 20% of Design Flow." This code case has not yet been approved for use in Regulatory Guide (RG) 1.192, "Operation and Maintenance Code Case Acceptability, ASME OM Code," June 2003. Although Code Case OMN-18 has not been approved for use, FENOC is proposing this alternative for Group A (and Group B re-classified as Group A) pumps.

The increased requirements imposed by the proposed alternative on the parameters to be monitored during every quarterly pump test and the more accurate instruments that must consistently be used during quarterly testing of pumps classified as Group A (and Group B pumps that are re-classified as Group A pumps), allows FENOC to perform better trending of pump performance data due to the more consistent requirements for each of the quarterly tests.

Due to the increased requirements on the parameters imposed by the proposed alternative during all quarterly tests there is no added value in performing the biennial Comprehensive Test.

5. Proposed Alternative and Basis for Use

FENOC proposes that in lieu of the requirements of ISTB-3400, Group A tests will be performed quarterly within ±20 percent of the pump design flow rate, with instrumentation meeting the instrument accuracy requirements of Table ISTB-3500-1 for the biennial Comprehensive Test, and the Comprehensive Test would not be required.

Specifically,

a. Pumps tested quarterly using this alternative must be tested within ±20 percent of pump design flow, as is required for the biennial Comprehensive Test in ISTB-3300(e) and (f).

b. The proposed alternative requires the accuracy of instruments used during quarterly Group A tests to meet the more accurate pressure and differential pressure requirements listed for the Comprehensive Test in Table ISTB-3500-1 (an accuracy improvement from ± 2 percent to ± 1/2 percent). Consistent use of these more accurate instruments during each quarterly test provides for improved Group A pump performance trend data evaluation.

c. Pumps that would normally be categorized as Group B pumps, but are re-categorized as Group A, may be tested according to the provisions of this alternative. As a result of this re-categorization from Group B to Group A, per Table ISTB-3000-1, additional data must be obtained quarterly rather than once every two years on the test parameters of Discharge pressure (for the Standby Liquid Control positive displacement pumps), and Vibration (for all the affected pumps).

d. Use of this alternative provides for consistent acceptance criteria for pump flow and differential pressure tests. FENOC will consistently utilize the Group A Test acceptance criteria in Tables ISTB-5100-1, ISTB-5200-1, and ISTB-5300-2 for pump tests rather than having to utilize the Comprehensive Test criterion for one biennial test.

The provisions of this request, as an alternative to the requirements of ISTB-3400, provide a reasonable alternative to the code requirements. The proposed alternative provides an acceptable level of quality and safety for monitoring the pumps and ensures they are capable of performing their safety function.

6. Duration of Proposed Alternative

The proposed alternative identified in this request shall be utilized during the Third Ten-Year IST Interval beginning May 18, 2009, or until the NRC publishes a new revision of RG 1.192 that approves Code Case OMN-18, whichever comes first.

7. Precedence

None

8. Reference

Code Case OMN-18, "Alternate Testing Requirements for Pumps Tested Quarterly within ± 20% of Design Flow"

2.3 Pump Testing System Index and Test Tables

2.3.1 Pump Testing System Index

System	Dwg. No.	Pump MPL	Coordinate
Standby Liquid Control (C41)	D-302-691	1C41-C001A	D-8
		1C41-C001B	G-8
Standby Liquid Control Transfer (C41)	D-302-692	C41-C002A	F-7
		C41-C002B	F-9
Residual Heat Removal (E12)	D-302-641	1E12-C002A	K-5
	D-302-643	1E12-C002B	J-12
		1E12-C002C	H-12
		1E12-C003	G-10
Low Pressure Core Spray (E21)	D-302-705	1E21-C001	G-5
		1E21-C002	F-9
High Pressure Core Spray (E22)	D-302-701	1E22-C001	F-12
		1E22-C003	H-10
Reactor Core Isolation Cooling (E51)	D-302-631	1E51-C001	C-4
		1E51-C003	F-5
Fuel Pool Cooling and Cleanup (G41)	D-302-654	G41-C003A	G-12
		G41-C003B	H-12
Emergency Closed Cooling Water (P42)	D-302-621	1P42-C001A	E-12
		1P42-C001B	G-12
Emergency Service Water (P45)	D-302-791	1P45-C001A	G-14
		1P45-C001B	G-11
		1P45-C002	G-9
Control Complex Chilled Water (P47)	D-913-001	P47-C001A	B-5
		P47-C001B	G-5
ESW Screen Wash (P49)	D-302-214	P49-C002A	C-12
		P49-C002B	G-12
Standby D.G. Fuel Oil (R45)	D-302-352	1R45-C001A	F-11
		1R45-C002A	F-9
		1R45-C001B	F-5
		1R45-C002B	F-3
	D-302-356	1R45-C001C	F-5
		1R45-C002C	F-4

2.3.2 Pump Test Table Nomenclature

The following abbreviations have been used in the Pump Test Table.

N	=	Rotative Speed
Pdiff	=	Differential Pressure Across Pump
Pdisch	=	Pump Discharge Pressure
PR	=	Relief Request
Q	=	Quarterly
2Y	=	2 Years (Biennially)
Qf	=	Flow Rate
RO	=	Refueling Outage
V	=	Vibration Velocity (unless otherwise noted)
X	=	Measurement/Observation Per OM Code ISTB

2.3.3 Pump Test Table

Quarterly Group A, Group B and Group AB Pump Tests

PUMP LISTING						MEASURED PARAMETERS				
SYSTEM	PUMP MPL	Group	INST. NO.	CLASS	FREQ.	N	Pdiff	Pdisch	Qf	V
Standby Liquid Control	1C41-C001A	AB	SVI-C41-T2001A	2	Q			X(3)(4)	X	X
	1C41-C001B	AB	SVI-C41-T2001B	2	Q			X(3)(4)	X	X
Standby Liquid Control Transfer (1)	C41-C002A	N/A	PTI-C41-P0001	O3	24M (1)		(1)		(1)	(1)
	C41-C002B	N/A	PTI-C41-P0001	O3	24M (1)		(1)		(1)	(1)
Residual Heat Removal	1E12-C002A	A	SVI-E12-T2001	2	Q		X(4)		X	X
	1E12-C002B	A	SVI-E12-T2002	2	Q		X(4)		X	X
	1E12-C002C	AB	SVI-E12-T2003	2	Q		X(4)		X	X
	1E12-C003	A	SVI-GEN-T2002	2	Q (2)			X		X
Low Pressure Core Spray	1E21-C001	AB	SVI-E21-T2001	2	Q		X(4)		X	X
	1E21-C002	A	SVI-GEN-T2002	2	Q (2)			X		X
High Pressure Core Spray	1E22-C001	AB	SVI-E22-T2001	2	Q		X(4)		X	X
	1E22-C003	A	SVI-GEN-T2002	2	Q (2)			X		X
Reactor Core Isolation Cooling	1E51-C001	AB	SVI-E51-T2001	2	Q	X	X(4)		X(5)	X
	1E51-C003	A	SVI-GEN-T2002	2	Q (2)			X		X
Fuel Pool Cooling and Cleanup	G41-C003A	A	SVI-G41-T2001	3	Q		X(4)		X	X
	G41-C003B	A	SVI-G41-T2001	3	Q		X(4)		X	X
Emergency Closed Cooling Water	1P42-C001A	A	SVI-P42-T2001A	3	Q		X(4)		X	X
	1P42-C001B	A	SVI-P42-T2001B	3	Q		X(4)		X	X
Emergency Service Water	1P45-C001A	A	SVI-P45-T2001	3	Q		X(4)		X	X
	1P45-C001B	A	SVI-P45-T2002	3	Q		X(4)		X	X
	1P45-C002	AB	SVI-P45-T2003	3	Q		X(4)		X	X

2.3.3 Pump Test Table (Continued)

Quarterly Group A, Group B and Group AB Pump Tests

PUMP LISTING						MEASURED PARAMETERS				
SYSTEM	PUMP MPL	Group	INST. NO.	CLASS	FREQ.	N	Pdiff	Pdisch	Qf	V
Control Complex Chilled Water	P47-C001A	A	SVI-P47-T2001A	3	Q		X(4)		X	X
	P47-C001B	A	SVI-P47-T2001B	3	Q		X(4)		X	X
Emergency Service Water Screen Wash (1)	P49-C002A	N/A	PTI-P49-P0001	O3	18M (1)		(1)		(1)	(1)
	P49-C002B	N/A	PTI-P49-P0001	O3	18M (1)		(1)		(1)	(1)
Standby Diesel Generator Fuel Oil	1R45-C001A	AB	SVI-R45-T2001	3	Q		X(4)		X	X
	1R45-C002A	AB	SVI-R45-T2001	3	Q		X(4)		X	X
	1R45-C001B	AB	SVI-R45-T2002	3	Q		X(4)		X	X
	1R45-C002B	AB	SVI-R45-T2002	3	Q		X(4)		X	X
	1R45-C001C	AB	SVI-R45-T2003	3	Q		X(4)		X	X
	1R45-C002C	AB	SVI-R45-T2003	3	Q		X(4)		X	X

Biennnnial Comprehensive Pump Tests

PUMP LISTING						MEASURED PARAMETERS				
SYSTEM	PUMP MPL	Group	INST. NO.	CLASS	FREQ.	N	Pdiff	Pdisch	Qf	V
Residual Heat Removal Water Leg Pump	1E12-C003	A	SVI-E12-T2023	2	RO (2)		X		X	X
Low Pressure Core Spray Water Leg Pump	1E21-C002	A	SVI-E21-T2004	2	RO (2)		X		X	X
High Pressure Core Spray Water Leg Pump	1E22-C003	A	SVI-E22-T2002	2	RO (2)		X		X	X
Reactor Core Isolation Cooling Water Leg Pump	1E51-C003	A	SVI-E51-T2003	2	RO (2)		X		X	X

2.3.3 Pump Test Table (Continued)

NOTE 1: The SLC Transfer pumps and ESW Screen Wash pumps are tested to satisfy requirements other than Technical Specification 5.5.6, "Inservice Testing Program." Where the requirements of the OM Code are determined to be impractical for these pumps, alternatives may be employed without prior approval. In addition, a Comprehensive pump test will not be performed.

NOTE 2: Full flow Inservice testing of the waterleg pumps will be performed in conjunction with the Comprehensive pump test during refueling outages in accordance with PR-1. These pumps shall have their discharge pressure and vibration monitored quarterly (SVI-GEN-T2002).

NOTE 3: When performing the quarterly Group AB test on the SLC pumps, discharge pressure is the fixed parameter. It is not identified in Table ISTB-5300-2 as a measured parameter.

NOTE 4: Measurements shall be acquired to satisfy the alternative test requirements of Code Case OMN-18 as addressed by relief request PR-3, pending NRC approval.

NOTE 5: 1E51-C001 'Reactor Core Isolation Cooling Pump' circuit has external recirculation flow through its lube oil cooler. Per ISTB-3550 the following has been evaluated: 1) This line is not practical to isolate due to the need for cooling water flow to the lube oil cooler. 2) This line contains a restricting orifice (1E51-D0012) with a fixed minimum flow rate of 16 gpm per calculation E51-25. and 3) This flow does not have a substantial effect on the test results as it equates to only 2.29% of the flow (16 gpm/700 gpm) X 100).

2.4 Hydraulic Circuits, Test Methods, and Instrumentation

Standby Liquid Control (SLC) Injection Pumps (Pump Group: AB)

MPL Nos.: 1C41-C001A, 1C41-C001B

Pump Type: reciprocating-type positive displacement

Hydraulic Circuit and Test Procedure:

The hydraulic circuits for inservice testing of the SLC pumps have a suction from the common suction line off of the SLC Test Tank, 1C41-A002. Pump discharges are directed through a common test return line back to the test tank. Reference conditions are established by throttling a valve in the common test return line. Discharge pressure is set to 1220 psig with flow rate being the variable parameter. Vibration velocity measurements (pump speed < 600 rpm) are taken in the vertical direction (crankshaft and plunger travel direction are in the horizontal plane) on the inboard and outboard pump bearings.

Instrumentation:

The instrumentation used is common to both pump tests. Discharge pressure is measured with a temporary M&TE gauge installed on the common discharge line. A permanently mounted flow meter located in the common discharge line is used to measure flow.

1C41-C001A and 1C41-C001B:

Parameter	Flow Rate	Discharge Pressure
MPL No.	1C41-R700	Temporary
Location	C-654-265	C-654-265
Elevation	NA	655
Reference Values	43 gpm (variable)	1220 psig (fixed)

Standby Liquid Control (SLC) Transfer Pumps (Pump Group N/A)

MPL Nos.: C41-C002A, C41-C002B

Pump Type: centrifugal

Hydraulic Circuit and Test Procedure:

The test loops for both pumps take a suction off of a common suction line from the Auxiliary Mixing Tank, C41-A003. The pump discharges are directed back to the Auxiliary Mixing Tank through a common return line. Valves in the return line are used to throttle flow until the pump dP is 33 psid. Flow is then measured with a temporary flowmeter. Vibration velocity measurements are taken in the horizontal, vertical and axial directions on the pump bearing housing. Since these pumps are outside the scope on the OM Code, a Comprehensive pump test will not be performed. The pumps are tested as Augmented components.

Instrumentation:

Pump differential pressure is determined with individual pump suction and discharge pressure measurements. A temporary M&TE gauge on the common suction line is used to measure suction pressure for both pump tests. Temporary M&TE gauges are installed at the discharge of each pump to measure discharge pressure. Flow is measured with an external clamp-on flowmeter located on the common portion of the return line.

C41-C002A and C41-C002B:

Parameter	Flow Rate	Suct. Press.	Disch. Press.
MPL No.	Temporary	Temporary	Temporary
Location	IBI/05-620	IBI/06-620	IBI/05-620
Elevation	NA	624	624
Reference Value	41.1 A - gpm (variable) 41.9 B - gpm (variable)		33 psid (fixed) 33 psid (fixed)

Residual Heat Removal (RHR) Pumps (Pump Group A (C002A&B), AB (C002C))

MPL Nos.: 1E12-C002A, 1E12-C002B, 1E12-C002C

Pump Type: vertical line shaft

IST Hydraulic Circuit and Test Procedure:

The suction paths for the RHR pump hydraulic circuits are through individual suction lines from the suppression pool. The return paths for inservice testing of 1E12-C002A and 1E12-C002B are through their respective heat exchangers and test lines back to the suppression pool. Heat exchanger outlet valves are used to throttle flow for these two pumps. The pump discharge for 1E12-C002C is routed directly back to the suppression pool through its test line. In this case a valve in the test line is used to throttle flow. Flow rate is set at 7100 to 7110 gpm (3.84 to 3.844 VDC) for all three pumps. Vibration velocity readings are taken in three orthogonal directions on the upper motor bearing housing.

Instrumentation:

Instrumentation for the three test circuits is similar. Differential pressure is determined by calculating the difference between suction and discharge pressure. Temporary M&TE gauges are installed to measure the suction and discharge pressures. Flow rate is monitored using permanent plant flow instrumentation and the integrated computer system (ICS).

1E12-C002A:

Parameter	Flow Rate *	Suct. Press.	Disch. Press.
MPL No.	E12EA005	Temporary	Temporary
Location	ICS	AXC/07-574	AXC/07-574
Elevation	NA	571	571
Reference Value	7100 gpm (fixed)		152.8 psid (Var)

* - E12EA005 is averaged for use of smoothed point E12S0005. A DMM may be used in lieu of ICS point if unavailable.

1E12-C002B:

Parameter	Flow Rate *	Suct. Press.	Disch. Press.
MPL No.	E12EA006	Temporary	Temporary
Location	ICS	AXC/03-574	AXC/03-574
Elevation	NA	571	571
Reference Value	7100 gpm (fixed)		148.2 psid (Var)

* - E12EA006 is averaged for use of smoothed point E12S0006. A DMM may be used in lieu of ICS point if unavailable.

1E12-C002C:

Parameter	Flow Rate *	Suct. Press.	Disch. Press.
MPL No.	E12EA007	Temporary	Temporary
Location	ICS	AXC/05-574	AXC/05-574
Elevation	NA	571	571
Reference Value	7100 gpm (fixed)		142.45 psid (Var)

* - E12EA007 is averaged for use of smoothed point E12S0007. A DMM may be used in lieu of ICS point if unavailable.

Low Pressure Core Spray (LPCS) Pump (Pump Group AB)

MPL No.: 1E21-C001

Pump Type: vertical line shaft

IST Hydraulic Circuit and Test Procedure:

The LPCS pump test loop suction path is from the suppression pool. The pump discharge is returned to the suppression pool through a test line. A valve in the test line is used to throttle flow until pump differential pressure is equal to 311 ±1 psid (3.522 VDC). Flow rate and vibration measurements are then taken after stabilization. Vibration velocity readings are taken in three orthogonal directions on the upper motor bearing housing.

Instrumentation:

Differential pressure is determined from individual suction and discharge pressure measurements. Temporary M&TE gauges are installed to measure suction and discharge pressures. Flow rate is monitored using permanent plant flow instrumentation and the integrated computer system (ICS).

1E21-C001:

Parameter	Flow Rate *	Suct. Press.	Disch. Press.
MPL No.	E21EA001	Temporary	Temporary
Location	ICS	AXC/08-568	AXC/08-568
Elevation	NA	572	572
Reference Value	6305 gpm (Var)		311 psid (Fixed)

* - A DMM may be used in lieu of ICS point if unavailable.

High Pressure Core Spray (HPCS) Pump (Pump Group AB)

MPL No.: 1E22-C001

Pump Type: vertical line shaft

IST Hydraulic Circuit and Test Procedure:

The hydraulic circuit for HPCS pump testing has a suction from either the suppression pool or the condensate storage tank. Pump discharge is routed back to the suction source through test lines. Valves in the test lines are used to vary system resistance. Flow rate is set at 6110 to 6140 gpm (3.444 to 3.456 VDC). Vibration velocity readings are taken in three orthogonal directions on the upper motor bearing housing.

Instrumentation:

Differential pressure is determined from individual suction and discharge pressure measurements. Temporary M&TE gauges are installed to measure suction and discharge pressures. Flow rate is monitored using permanent plant flow instrumentation and the integrated computer system (ICS).

1E22-C001:

Parameter	Flow Rate *	Suct. Press.	Disch. Press.
MPL No.	E22EA001	Temporary	Temporary
Location	ICS	AXC/02-574	AXC/03-568
Elevation	NA	572	572
Reference Value	6110 gpm (Fixed)		517.7 psid (Var)

* - E22EA001 is averaged for use of smoothed point E22EF001. A DMM may be used in lieu of ICS point if unavailable.

Reactor Core Isolation Cooling (RCIC) Pump (Pump Group AB)

MPL No.: 1E51-C001

Pump Type: centrifugal with variable speed drive (steam turbine)

IST Hydraulic Circuit and Test Procedure:

The RCIC pump suction for inservice testing is from the condensate storage tank. Pump discharge is routed back to the condensate storage tank through a test line. Flow is throttled with a valve in the test line to obtain 700 +5-0 gpm @ 4400 ±10 rpm. Vibration velocity is measured in the horizontal and vertical directions on the inboard bearing and outboard pump bearings, and in the axial direction on the outboard (thrust) bearing.

Instrumentation:

Differential pressure is determined by calculating the difference between suction and discharge pressures. Suction pressure is measured with a temporary M&TE gauge. Discharge pressure and flow rate are monitored using permanent plant instrumentation and the integrated computer system (ICS). Turbine (pump) speed is also monitored with permanent plant instrumentation, with readings taken from an indicator on a control room panel.

1E51-C001:

Parameter	Flow Rate	Suct. Press.	Disch. Press.	Pump Speed *
MPL No.	E51EA004	Temporary	Temporary	1E51-R607
Location	ICS	AXB/05-574	AXB/05-574	1H13-P601
Elevation	NA	572	572	NA
Reference Value	700 gpm (Fixed)		1211 psid (Var)	4400 rpm (Fixed)

* A calibrated strobe light is used in conjunction with 1E51-R607.

Waterleg Pumps (Pump Group A)

MPL Nos.: 1E12-C003, 1E21-C002, 1E22-C003, 1E51-C003

Pump Type: centrifugal

IST Hydraulic Circuit and Test Procedure:

The waterleg pumps take a suction off of the main suction line for their associated ECCS pump. Approximately 10 gpm is returned to the main pump suction through a recirculation line. In order to create enough additional flow to achieve the IST reference values for each pump, flow is directed through temporary hoses from vents, drains, and test connections. This requires the main pump breakers to be opened (RHR, LPCS, and HPCS) or the pump discharge to be isolated (RCIC) since the pump discharge headers are no longer assured to be full. Flow rate is measured in the waterleg pump suction line such that recirculation flow is included in the measured flow rate.

Flow through the temporary hoses is throttled until the reference flow rate is set as follows:

1E12-C003:	37.2 gpm (2.80 to 2.81 VDC)
1E21-C002:	41.0 gpm (3.10 to 3.11 VDC)
1E22-C003:	32.4 gpm (2.32 to 2.33 VDC)
1E51-C003:	41.5 gpm (3.15 to 3.16 VDC)

Vibration velocity measurements are then taken in the horizontal, vertical and axial directions on the pump housing.

Testing as described above is performed during refueling outages in conjunction with the Comprehensive Pump Test (CPT). Discharge pressure and vibration measurements are taken during the quarterly Group A test with the pumps in normal operation (approximately 10 gpm of recirculation flow) in accordance with relief request PR-1.

Instrumentation:

Differential pressure is determined by calculating the difference between the suction and discharge pressures. Suction and discharge pressures are measured using temporary M&TE gauges as described below. Flow rates are determined by measuring the dP across an orifice in the waterleg pump suction line with a temporary dP transmitter, then converting the dP to flow.

Waterleg Pumps (Cont.)

1E12-C003:

Parameter	Flow Rate	Suct. Press.	Disch. Press.
MPL No.	Temp. dP Xmtr *	Temporary	Temporary
Location	AXB/02-574	AXB/04-574	AXB/04-574
Elevation	NA	574	574
Reference Value	37.2 gpm (Fixed)		33 psid (Var)

* - With resistor box and DMM

1E21-C002:

Parameter	Flow Rate	Suct. Press.	Disch. Press.
MPL No.	Temp. dP Xmtr *	Temporary	Temporary
Location	AXC/07-574	AXC/07-574	AXC/07-574
Elevation	NA	574	574
Reference Value	41.0 gpm (Fixed)		35 psid (Var)

* - With resistor box and DMM

1E22-C003:

Parameter	Flow Rate	Suct. Press.	Disch. Press.
MPL No.	Temp. dP Xmtr *	Temporary	Temporary
Location	AXC/02-574	AXC/02-574	AXC/02-574
Elevation	NA	576	576
Reference Value	32.4 gpm (Fixed)		33.5 psid (Var)

* - With resistor box and DMM

1E51-C003:

Parameter	Flow Rate	Suct. Press.	Disch. Press.
MPL No.	Temp. dP Xmtr *	Temporary	Temporary
Location	AXB/06-574	AXB/06-574	AXB/06-574
Elevation	NA	576	576
Reference Value	41.5 gpm (Fixed)		33 psid (Var)

* - With resistor box and DMM

Fuel Pool Cooling and Cleanup Pumps (Pump Group A)

MPL Nos.: G41-C003A, G41-C003B

Pump Type: centrifugal

IST Hydraulic Circuit and Test Procedure:

The normal suction and discharge lines are used for inservice testing of the fuel pool cooling and cleanup pumps. For testing purposes the filter/demineralizers are bypassed and the full test flow rate goes through the filter/demineralizer bypass line. The flow rate is set at 1400-1410 gpm (4.733 to 4.760) by using a valve in the bypass line. Vibration velocity is measured in the horizontal and vertical directions for the inboard and outboard pump bearings, and in the axial direction for the outboard (thrust) bearing.

Instrumentation:

Pump differential pressure is determined using individual suction and discharge pressure gauges. Suction pressures are measured with temporary M&TE gauges installed on each pump's suction line. Discharge pressure measurements utilize permanent plant instrumentation on the pump discharge lines. Flow rate is determined by measuring a voltage in the instrument loop for filter/demineralizer bypass flow, then converting the voltage to a flow rate.

G41-C003A(B):

Parameter	Flow Rate *	Suction Pressure	Discharge Pressure
MPL No.	1G41-N076/K020	Temporary	Temporary
Location	1H13-P969B	IBH/07-574	IBH/07-574
Elevation	NA	577	577
Reference Value	1400 gpm - A (fixed) 1400 gpm - B (Fixed)		119.4 psid (Var) 118.0 psid (Var)

* Listed instruments with DMM

Emergency Closed Cooling Water (ECC) Pumps (Pump Group A)

MPL Nos.: 1P42-C001A, 1P42-C001B

Pump Type: centrifugal

IST Hydraulic Circuit and Test Procedure:

The hydraulic circuit for inservice testing of the ECC pumps uses the normal closed loop with the control complex chillers bypassed. A valve in the bypass line is used to establish the reference flow rate of 2000 gpm (4.20 VDC). Vibration velocity measurements are taken in the horizontal and vertical planes on the inboard and outboard pump bearings. Vibration velocity is also measured in the axial direction for the outboard (thrust) bearing.

Instrumentation:

Differential pressure is the variable parameter and is determined with individual suction and discharge pressure gauges. Suction pressure measurements utilize permanent plant instrumentation on the pump suction lines. Discharge pressures are measured with temporary M&TE gauges installed on each pump's discharge line. Flow rate is monitored using permanent plant flow instrumentation and the integrated computer system (ICS).

1P42-C001A:

Parameter	Flow Rate	Suction Pressure	Discharge Pressure
MPL No.	P42EA001 *	Temporary	Temporary
Location	ICS	CCB/03-574	CCD/03-574
Elevation	NA	576	577
Reference Value	2000 gpm (Fixed)		64.5 psid (Var)

* - A DMM may be used in lieu of ICS point if unavailable.

1P42-C001B:

Parameter	Flow Rate	Suction Pressure	Discharge Pressure
MPL No.	P42EA004 *	Temporary	Temporary
Location	ICS	CCE/03-574	CCD/04-574
Elevation	NA	576	577
Reference Value	2000 gpm (Fixed)		65.0 psid (Var)

* - A DMM may be used in lieu of ICS point if unavailable.

Emergency Service Water (ESW) Pumps (Pump Group A (1P45-C001A&B), AB (1P45-C002)

MPL Nos.: 1P45-C001A, 1P45-C001B, 1P45-C002

Pump Type: vertical line shaft

IST Hydraulic Circuit and Test Procedure:

The test loops for all three pumps establish flow through all of their associated heat exchangers (with the exception of the fuel pool cooling heat exchangers where the flow is through the bypass line), with suction from Lake Erie. The differential pressure is set at 96 psid for 1P45-C001A&B and 90 psid for 1P45-C002 by throttling the pump discharge valves. Differential pressure is determined by first measuring the suction bay water level as a distance beneath the ESW Pumphouse floor. That distance is used to calculate the elevation difference between the water level and the discharge pressure gauge (suction lift distance) in feet, which is then converted to pressure. A test discharge pressure is determined by subtracting the suction lift from the required pump dP. Throttling flow to establish the calculated test discharge pressure thus sets the differential pressure across the submerged pump impeller to the required value. Once the pump differential pressure is established, total pump flow is determined by summing the measured flows in each of the branch lines. Vibration velocity readings are then taken in three orthogonal directions on the upper motor bearing housing.

Instrumentation:

Bay level measurements are taken to the nearest ½ inch using a dipstick or tape measure with the floor to water surface measurement expected to be between 14'6" and 14'11". Discharge pressure is measured with a temporary M&TE gauge. Flow measurements through the RHR heat exchangers, ECC heat exchangers, and standby diesel generator heat exchangers are obtained with permanent plant flow instrumentation and the integrated computer system (ICS). Flow rates through the fuel pool heat exchanger bypass lines (through the Unit 2 ECC System) and the HPCS room cooler are determined by measuring flow element dP with temporary M&TE dP gauges, then converting the dP to a flow rate.

1P45-C001A:

Parameter	RHR Hx Flow *	Unit 1 ECC Flow *	DG Hx Flow *	Unit 2 ECC Flow **	Suction Bay Level	Discharge Pressure
MPL No.	E12EA008	P45EA002	P45EA003	Temporary dP Gauge	Physical Meas.	Temporary
Location	ICS	ICS	ICS	CCD/06-574	EWC/01-586	EWC/05-586
Elevation	NA	NA	NA	NA	NA	590
Reference Value	Total Flow	10482 gpm (Var)				96 psid (Fixed)

* - A DMM may be used in lieu of ICS point if unavailable.

** - A Controlotron ultrasonic flowmeter may be used if restricting orifice is unavailable.

Emergency Service Water (ESW) Pumps (Continued)

1P45-C001B:

Parameter	RHR Hx Flow *	Unit 1 ECC Flow *	DG Hx Flow *	Unit 2 ECC Flow **	Suction Bay Level	Discharge Pressure
MPL No.	E12EA009	P45EA007	P45EA006	Temporary dP Gauge	Physical Measurement	Temporary
Location	ICS	ICS	ICS	CCD/06-574	EWC/01-586	EWC/05-586
Elevation	NA	NA	NA	NA	NA	590
Reference Value	Total Flow	10941.6 gpm (Var)				96 psid (Fixed)

* - A DMM may be used in lieu of ICS point if unavailable.

** - A Controlotron ultrasonic flowmeter may be used if restricting orifice is unavailable.

1P45-C002:

Parameter	HPCS DG Hx Flow *	HPCS Room Cooler Flow	Suction Bay Level	Discharge Pressure
MPL No.	P42EA004	Temporary dP Gauge	Physical Measurement	Temporary
Location	ICS	EWC/03-568	EWC/01-586	EWC/01-586
Elevation	NA	NA	NA	588
Reference Value	Total Flow	906.4 gpm (Var)		90.0 psid (Fixed)

* - A DMM may be used in lieu of ICS point if unavailable.

Control Complex Chilled Water (CCCW) Pumps (Pump Group A)

MPL Nos.: P47-C001A, P47-C001B

Pump Type: centrifugal

IST Hydraulic Circuit and Test Procedure:

The normal closed loops of the CCCW system are used as the hydraulic circuits for inservice testing of the CCCW pumps. The control complex chiller outlet isolation valves are used to throttle flow until the reference value of 1400 gpm is established. Vibration velocity measurements are taken in the horizontal and vertical planes on the inboard and outboard pump bearings. Vibration velocity is also measured in the axial direction for the outboard (thrust) bearing.

Instrumentation:

Pump differential pressure is determined from the difference between individual suction and discharge pressure readings. Suction and discharge pressures are measured with temporary M&TE gauges. Flow rate readings are from a permanent local flow indicator.

P47-C001A(B):

Parameter	Flow Rate	Suction Pressure	Discharge Pressure
MPL No.	P47-N141A(B)	Temporary	Temporary
Location	CCD/02-574	CCD/02-574	CCD/02-574
Elevation	NA	578	576
Reference value	1400 gpm (Fixed) for A and B		61 psid (Var) for A and B

Emergency Service Water Screen Wash Pumps (Pump Group N/A)

MPL Nos.: P49-C002A, P49-C002B

Pump Type: vertical line shaft

IST Hydraulic Circuit and Test Procedure:

These pumps take suction from Lake Erie and discharge through screen and trough wash nozzles. In order to achieve the reference values for differential pressure, flow is also directed through strainer drain valves. The trough wash and strainer drain valves are used to adjust flow until the required dP is established.

Pump differential pressure is calculated by first recording suction bay water level in feet of elevation. The suction pressure is then determined by calculating the height of the water column above the pump impeller and converting it to pressure. A test discharge pressure is calculated by adding the suction pressure to the required pump dP and subtracting the pressure equivalent of the elevation difference between the pump impeller and the discharge pressure gauge. Once the test discharge pressure is established, flow rate is measured with a temporary flow meter on the pump discharge line. Vibration velocity readings are then taken in three orthogonal directions on the upper motor bearing housing. Since these pumps are outside the scope on the OM Code, a Comprehensive pump test will not be performed. The pumps are tested as Augmented components.

Instrumentation:

Suction bay level is read from a permanent local indicator. Temporary M&TE gauges are installed to measure discharge pressure. Flow rate is measured with an external clamp-on flow meter.

P49-C002A(B):

Parameter	Flow Rate	Suction Bay Level	Discharge Pressure
MPL No.	Temporary	0P45-R240	Temporary
Location	EWA/04-586	EWC/01-586	EWB/01-586
Elevation	NA	NA	593
Reference Value	368 gpm A (Var) 381 gpm B (Var)		120 psid - A (Fixed) 119 psid - B (Fixed)

Standby Diesel Generator Fuel Oil Transfer Pumps (Pump Group AB)

MPL Nos.: 1R45-C001A, 1R45-C002A, 1R45-C001B, 1R45-C002B, 1R45-C001C, 1R45-C002C

Pump Type: centrifugal

IST Hydraulic Circuit and Test Procedure:

The hydraulic circuits for fuel oil transfer pump testing use the normal flow paths for filling the fuel oil day tanks. The pump suction is from the day tank and the discharge goes through an eductor in the main storage tank. The increased flow then returns to the day tank. When the fuel oil transfer pumps are tested, they are run long enough to fill the day tank to the overflow point (which is directed back to the main storage tank), thus creating a repeatable condition. Once conditions are stable, the pump discharge valve is throttled to set the pump differential pressure to the desired value. The reference dP is 70 psid for 1R45-C001A, 1R45-C002A, 1R45-C001B, 1R45-C002B, 72.7 psid for 1R45-C001C, and 71.1 psid for 1R45-C002C. After the pump dP is set, flow rate is measured with a temporary flow meter on the pump suction line. Vibration velocity readings are then taken in the horizontal and vertical directions on the inboard and outboard pump bearings.

Instrumentation:

Pump differential pressure is determined using individual suction and discharge pressure gauges. Both gauges are temporary M&TE. Flow rate is measured with an external clamp-on flow meter.

1R45-C001A, 1R45-C002A, 1R45-C001B, 1R45-C002B:

Parameter	Flow Rate	Suction Pressure	Discharge Pressure
MPL No.	Temporary	Temporary	Temporary
Location	DGD/01-620	DGD/01-620	DGD/01-620
Elevation	NA	621	623
Reference Value	92.0 gpm - 1A (Var) 96.7 gpm - 2A (Var) 98.9 gpm - 1B (Var) 84.8 gpm - 2B (Var)		70 psid (Fixed) for all 4 pumps

1R45-C001C, 1R45-C002C:

Parameter	Flow Rate	Suction Pressure	Discharge Pressure
MPL No.	Temporary	Temporary	Temporary
Location	DGD/01-620	DGD/01-620	DGD/01-620
Elevation	NA	621	623
Reference Value	83.0 gpm - 1C (Var) 87.5 gpm - 2C (Var)		72.7 psid - 1C (Fixed) 71.1 psid - 2C (Fixed)

3.0 INSERVICE TESTING PROGRAM FOR VALVES

3.1 General Information

3.1.1 Applicable Code

The valve testing program for ISI Class 1, 2, 3, MC and Optional valves meets the requirements of ASME OM Code-2001 Edition with Addenda through OMb-2003. Where these requirements are determined to be impractical, specific requests for relief have been written and included in Section 3.2. In addition, cold shutdown and refueling outage justifications are included in Section 3.2 for those requirements that have been determined to be impractical to meet at the stated test frequencies.

3.1.2 Valve Program Tables

The tables in Section 3.4 list the ISI Class 1, 2, 3, MC and Optional valves and pressure relief devices included in the PNPP IST program. Information provided for each valve or pressure relief device is as follows:

VALVE/DEVICE IDENTIFICATION AND IST REQUIREMENTS

SYSTEM P&ID:

The system and MPL are located in the top left hand corner of the program table and in the top right hand corner is the drawing number (DWG. No.). This identifies the valves associated system and P&ID.

VALVE/DEVICE:

The valve or pressure relief device Master Parts List (MPL) number.

ISI CLASS:

The ISI safety classification of the valve or pressure relief device.

P&ID COOR.:

The coordinates on P&ID at which the valve or pressure relief device is located.

ACTIVE:

Valves which are required to change obturator position to accomplish a specific function.

PASSIVE:

Valves which maintain obturator position and are not required to change position to accomplish a specific function.

VALVE CATEGORY:

The category assigned to the valve based on the definitions provided in ISTC. Four (4) separate categories are defined in this standard and any combination of these categories may exist.

CATEGORY A - Valves for which seat leakage is limited to a specific maximum amount in the closed position for fulfillment of their required function.

CATEGORY B - Valves for which seat leakage in the closed position is inconsequential for fulfillment of their required function.

CATEGORY C - Valves which are self-actuating in response to some system characteristic, such as pressure (pressure relief devices) or flow direction (check valves) for fulfillment of their required function.

CATEGORY D - Valves which are actuated by an energy source capable of only one operation, such as rupture disks or explosively-actuated valves.

SIZE:

The nominal pipe size of the valve in inches.

VALVE TYPE:

The type of valve/device is indicated by the following abbreviations:

BALL	BA
BUTTERFLY	BF
CHECK	CH
DIAPHRAGM	DI
GATE	GT
GLOBE	GL
RELIEF	RE
RUPTURE DISK	RU
SAFETY	SV
POWER ACTUATED SAFETY/RELIEF	SR/AO
SET PRESSURE DEVICE	SD
STOP CHECK	SC
THREE WAY	TW

ACTUATOR TYPE:

The type of valve/device actuator is indicated by the following abbreviations:

MOTOR OPERATOR	MO
AIR OPERATOR	AO
SOLENOID OPERATOR	SO
HYDRAULIC OPERATOR	HO
MANUAL	MA
SELF-ACTUATED	SE

NORMAL POSITION:

The position of the valve/device during normal plant operation, specified as follows:

Normally Open	O
Normally Closed	C
Throttled	TH
Locked Open	LO
Locked Closed	LC
Locked Throttled	LTH

TEST REQUIREMENTS:

The test(s) that will be performed to fulfill the requirements of the OM Code. The test descriptions and abbreviations used are identified in Table 3.1-1.

TEST FREQUENCY:

The frequency at which the above mentioned tests will be performed to fulfill the requirements of OM Code and augmented requirements are defined in Table 3.1-2.

SURVEILLANCE (SVI) NO.:

The surveillance instruction in which the valve or device is tested.

STROKE TIME:

The stroke time is the reference value assigned, in tenth of seconds, for power operated Category A or B valves.

SEAT LEAKAGE:

The limiting maximum value of seat leakage, in gpm or sccm, for Category A and AC valves.

SET PRESSURE:

The pressure relief device set pressure (psi) is provided for safety valve, relief valve, safety relief valve, power actuated pressure relief valve, rupture disk device, vacuum relief device and set pressure relief device with deviations noted in the Remarks Section.

RELIEF REQUEST:

The reference to a relief request in Section 3.2 for valve and pressure relief device testing. Requests for relief are identified as VR-XX.

COLD SHUTDOWN JUSTIFICATION:

The reference to a Cold Shutdown Justification in Section 3.2 for valve testing. This justification provides the mechanism for documenting the bases for performing a specific test during a cold shutdown. Cold Shutdown Justifications are identified as CS-XX and comply with the rules of the OM Code.

REFUEL OUTAGE JUSTIFICATION:

The reference to a Refueling Outage Justification in Section 3.2 for valve testing. This justification provides the mechanism for documenting the bases for performing a specific test during a refueling outage. Refueling Outage Justifications are identified as RO-XX and comply with the rules of the OM Code.

REMARKS:

Remarks in the valve test table are to clarify any special requirement due to design or identify other documents affecting testing requirements.

3.1.3 Measurement of Test Quantities

STROKE TIME:

Stroke time is that time interval from initiation of the actuating signal to the end of the actuating cycle. Stroke time reference values for each power operated valve are specified in the valve test table for the open or closed direction. Stroke time for all power operated valves is measured to the nearest one-tenth of a second.

POSITION INDICATION:

Valve disk movement is determined by exercising the valve while observing an appropriate indicator that signals the required change of disk position. Actual valve movement or observing indirect evidence, such as changes in system pressure, flow rate, level or temperature, which reflect stem or disk position will be used to verify that remote valve position indicators agree with valve travel direction, if practicable.

SEAT LEAKAGE:

Seat leakage is measured by one of the following methods:

a) measuring leakage through a downstream telltale connection while maintaining test pressure on one side of the valve,

or

b) measuring the feed rate required to maintain test pressure in the test volume or between two seats of a gate valve, provided the total apparent leakage rate is charged to the valve or gate valve seat being tested, and that the conditions required by ISTC-3630(b) are satisfied;

or

c) determining leakage by measuring pressure decay in the test volume, provided the total apparent leakage rate is charged to the valve or valve combination or gate valve seat being tested, and that the conditions required by ISTC-3630(b) are satisfied.

CHECK VALVE EXERCISE:

a) During exercise testing with flow, the necessary obturator movement shall be demonstrated by performing both an open and a close test. [ISTC-5221(a)]

   (1) Check valves that have a safety function in both the open and close directions shall be exercised by initiating flow and observing that the obturator has traveled to either the full open position or the position required to perform its intended function(s) and verify that on cessation or reversal of flow, the obturator has traveled to its seat.

   (2) Check valves that have a safety function in only the open direction shall be exercised by initiating flow and observing that the obturator has traveled to either the full open position or the position required to perform its intended function(s) and verify closure.

   (3) Check valves that have a safety function in only the close direction shall be exercised by initiating flow and observing that the obturator has traveled at least to the partially open position (normal or expected system flow), and verify that on cessation of reversal of flow, the obturator has traveled to the seat.

Observations shall be made by observing a direct indicator (e.g., position indicating device) or other positive means (e.g., changes in system pressure, flow rate, level, temperature, seat leakage testing, or non-intrusive testing results.

b) If a mechanical exerciser is used to exercise a valve, the force or torque required to move the obturator and fulfill its safety function(s) shall meet the acceptance criteria specified by PNPP [ISTC-5221(b)]. If practicable, the force(s) or torque(s) required to move the obturator and fulfill any non-safety function should be evaluated to detect abnormality or erratic action for corrective action. The following shall be considered when determining acceptance criteria for mechanical exercising:

(1) Exercise test(s) shall detect a missing obturator, sticking (closed or open), binding (throughout obturator movement), and the loss of any weight(s). Both an open and closed test may not be required.

(2) Acceptance criteria shall consider the specific design, application, and historical performance.

(3) If impracticable to detect a missing obturator or the loss or movement of any weight(s) using a mechanical exerciser, other positive means may be used (e.g., seat leakage tests and visual observations to detect obturator loss and the loss or movement of external weight(s), respectively).

c) Per ISTC-5221(c); If the test methods in ISTC-5221(a) (flow exercising) and ISTC-5221(b) (mechanical exercising) are impractical for certain check valves, or if sufficient flow cannot be achieved or verified, a sample disassembly and inspection program shall be used to verify obturator movement. If maintenance is performed on one of these valves that could affect its performance, the post-maintenance testing shall be conducted in accordance with ISTC-5221(c)(4).

Check valves that will be disassembled and inspected shall be grouped by similar design, application, and service condition and require a periodic examination of one valve from group each refueling outage. The details and bases of the sampling program shall be documented and recorded

in the test plan. The following shall be considered when implementing a sample disassembly and inspection program:

1) Grouping of check valves for the sample disassembly and inspection program shall be technically justified and shall consider, as a minimum, valve manufacturer, design, service, size, materials of construction, and orientation. [ISTC-5221(c)(1)]

   Maintenance and modification history should be considered in the grouping process. Valve groupings should also consider potential flow instabilities, required degree of disassembly, and the need for tolerance or critical dimension checks.

(2) During the disassembly process, the full stroke motion of the obturator shall be verified. Full stroke motion of the obturator shall be verified immediately prior to completing reassembly. Check valves that have their obturator disturbed before full stroke motion is verified shall be examined to determine if a condition exists that could prevent full opening or reclosure of the obturator. Examples of valves that could have their obturators disturbed prior to verifying full stroke motion include; spring loaded check valves or check valves with the obturator supported from the bonnet. [ISTC-5221(c)(2)]

(3) At least one valve from each group shall be disassembled and inspected each refueling outage; and all valves in the group be disassembled and inspected at least once every 8 years. [ISTC-5221(c)(3)]

(4) Before return to service, valves that were disassembled for inspection or that received maintenance that could affect their performance, shall be exercised full- or part-stroke, if practicable, with flow in accordance with ISTC-3520. Those valves shall also be tested for other requirements (e.g., closure verification or leak rate testing) before returning them to service. [ISTC-5221(c)(4)]

SERIES VALVES IN PAIRS:

If two check valves are in a series configuration without provisions to verify individual reverse flow closure and the plant safety analysis assumes closure of either valve (but not both), the valve pair may be operationally tested closed as a unit. If the plant safety analysis assumes that a specific valve or both valves of the pair close to perform the safety function(s), the required valve(s) shall be tested to demonstrate individual valve closure.

CHECK VALVE CONDITION MONITORING:

As an alternative to the requirements of paragraphs ISTC-3510, ISTC-3520, ISTC-3530, ISTC-3550, and ISTC-5221, PNPP may establish a Check Valve Condition Monitoring (CVCM) Program per ISTC-5222. The purpose of this program is to both (a) improve check valve performance and to (b) optimize testing, examination, and preventive maintenance activities in order to maintain the continued acceptable performance of a select group of check valves. PNPP may implement this program on a valve or a group of similar valves basis.

a) Examples of candidates for (a) improved valve performance are check valves that:

   (1) have an unusually high failure rate during inservice testing or operations

   (2) cannot be exercised under normal operating conditions or during shutdown

   (3) exhibit unusual, abnormal, or unexpected behavior during exercising or operation

   (4) the Owner elects to monitor for improved valve performance

b) Examples of candidates for (b) optimization of testing, examination, and preventive maintenance activities are check valves with documented acceptable performance that:

   (1) have had their performance improved under the Check Valve Condition Monitoring Program

   (2) cannot be exercised or are not readily exercised during normal operating conditions or during shutdowns

   (3) can only be disassembled and examined

   (4) the Owner elects to optimize all the associated activities of the valve or valve group in a consolidated program.

The program shall be implemented in accordance with Appendix II, "Check Valve Condition Monitoring Program", of OMb-2003 Addenda. a site administrative procedure, and site implementing procedures which perform the specified tests identified in the individual Check Valve Condition Monitoring (CVCM) Program Plans.

If the Appendix II CVCM Program for a valve or group of valves is discontinued then the requirements of ISTC-3510, ISTC-3520, ISTC-3530, ISTC-3550, and ISTC-5221 shall be implemented.

SET PRESSURE:

Set pressure testing for relief devices is measured by one of the following methods:

a) Pressure Relief Valves - valves requiring a set pressure measurement may be tested in place or removed for bench testing. Valves designed to operate on steam shall be set pressure tested using saturated steam. Valves on systems using other compressible fluids shall be tested with the normal operating fluid. Valves used on liquid service systems shall be tested with the normal system operating fluid for which they were designed. Alternative test media may be used provided the requirements contained in Appendix I of the OM Code are met.

b) Reclosing Relief Devices (i.e., Vacuum Relief or Set Pressure) - shall be actuated to verify open and close capability, set pressure, and performance of any pressure and position sensing accessories.

NOTE: Non-Reclosing pressure relief devices used in BWR Scram accumulators are exempt from the requirements of the OM Code. (OMb-2003, ISTC-1200)

c) Non-Reclosing Rupture Disks - Devices are visually inspected upon receipt, functional testing is not required. Devices are periodically replaced as provided for in Appendix I of the OM Code.

MANUAL VALVES:

Although ISTC-3540 permits manual valves to be full-stroke exercised at least once every 5 years; pursuant to 10 CFR 50.55a(b)(3)(vi), manual valves within the IST program scope that perform an active safety function shall be exercised through a complete cycle at least once every 2 years. Exercise testing shall be considered acceptable if valve stem travel exhibits unrestricted movement with no abnormal resistance or binding through one complete cycle. Where practical, process parameters may be utilized to verify obturator movement. However, where process parameters are utilized to verify obturator movement it is not necessary to be performed simultaneous to manual exercising. If a valve fails to exhibit the required change of obturator position, the valve shall immediately declared inoperable.

The use of a valve persuader (cheater) for additional mechanical advantage will not invalidate the test, as it is recognized that larger valves may exhibit increased packing friction and/or increased friction associated with the disk to seat interface. In addition, a valve persuader may be used for personnel safety depending on a valve's service application (i.e., main steam). Must receive Senior Reactor Operator permission to use mechanical advantage devices.

SKID-MOUNTED COMPONENTS:

Skid-mounted valves are exempt perr Subsection ISTC-1200, provided they are tested as part of the major component and are justified by PNPP to be adequately tested. Skid-Mounted pumps and valves are those which are integral to or that support operation of major components, even though these pumps and valves may not be located on the skid. In general, these valves are supplied by the manufacturer of the major component. Examples include: air start valves associated with the emergency diesel generators, and solenoid operated pilot valves used to control air operated valves and ADS/Safety Relief valves. Valves considered as skid-mounted shall be included in the valve test tables with "skid-mounted" specified in the Remarks column.

3.1.4 Allowable Ranges of Test Quantities

STROKE TIME:

Stroke times shall be compared to the initial reference values established per the OM Code. Stroke times shall meet the criteria listed below. Valves not meeting this criteria shall be immediately retested or declared inoperable. Valves declared inoperable may be repaired, replaced, or the data may be analyzed to determine the cause of the deviation and the valve shown to be operating acceptably. Valve operability based on analysis shall have the results of the analysis recorded in the record of tests.

a) Electric motor operated valves with reference stroke times greater than 10 sec. shall exhibit no more than ±15% change in stroke time when compared to the reference value.

b) Other power operated valves with reference stroke times greater than 10 sec. shall exhibit no more than ±25% change in stroke time when compared to the reference value.

NOTE: As an alternative to the requirements of paragraph ISTC-5120 of the ASME OM Code-2001 through OMb-2003, Code Case OMN-1 "Alternative Rules for Preservice and Inservice Testing of Certain Electric Motor-Operated Valve Assemblies in LWR Power Plants" provides an alternative to MOV stroke time testing.

PNPP shall adopt the alternative test requirements specified in ASME OM Code Case OMN-1 in lieu of stroke timing certain motor operated valves (MOVs) in accordance with the requirements specified in paragraph ISTC-5120 and position indication testing in accordance with the requirements specified in paragraph ISTC-3700. The PNPP MOV Program satisfies the criteria specified in ASME OM Code Case OMN-1 and the

conditional acceptance specified in Reg. Guide 1.192, "Operation and Maintenance Code Case Acceptability, ASME OM Code". Paragraph 3.6 of OMN-1 requires MOVs to be full stroke exercised (not timed) to the position(s) required to fulfill their function(s) on an interval not to exceed one year or one refueling cycle (which ever is longer). Full stroke exercising is based on the practicality of exercising during power operation, cold shutdown, or refueling. Justification for extended full stroke exercising of ASME OM Code Case OMN-1 scoped MOVs beyond a quarterly frequency are provided in Section 3.2 of the PNPP IST Program. Also, refer to Valve Relief Request VR-3.

c) Electric motor operated valves with stroke times less than or equal to 10 sec. shall exhibit no more than a ±25% or ±1 sec. change in stroke time, whichever is greater, when compared to the reference value.

d) Other power operated valves with reference stroke times less than or equal to 10 sec. shall exhibit no more than ±50% change in stroke time when compared to the reference value.

e) Valves that stroke in less than 2 sec. may be exempted from (d) above. In such cases the maximum limiting stroke time shall be 2 sec.

f) Valve stroke time shall not exceed either the values used to satisfy PNPP Technical Specifications or the owner's (CEI) established stroke times.

NOTE: The most limiting action limit shall be used from Technical Specifications, USAR or Recommended Practice (if applicable).

POSITION INDICATION:

The valve travel direction (open/closed) will agree with remote position indicators.

SEAT LEAKAGE:

Valve leakage rates shall not exceed either the value specified by Technical Specifications or the Owner's (CEI) established leakage rates.

SET PRESSURE:

Set pressure shall not exceed the greater of either the ± tolerance limit of the Owner-established set pressure acceptance criteria or ± 3% of the valves nameplate set pressure.

3.1.5 Instrument Accuracy

Instruments used to measure stroke times shall be capable of measurement to the nearest hundredth of a second.

3.1.6 Post-Maintenance Testing

During the inservice life of a valve, work may be required to restore the valve performance to within acceptable ranges. This work can be in the form of: routine servicing, maintenance (preventive/corrective), repair, and replacement. The following work scope guidelines, test types to work scope required, steps to determine retest requirements, and retest flowpath (with examples) should be utilized in determining post-maintenance test requirements.

WORK SCOPE GUIDELINES

a. Routine - Performance of planned, preventive maintenance which does not require disassembly of the valve or replacement of parts such as greasing a bearing, stem lubrication, adjustment of stem packing and etc.

b. Maintenance - Performance of preventive or corrective maintenance which does require disassembly of the valve or replacement of consumable items to correct or prevent an abnormal or unsatisfactory condition. Examples: removal of bonnet, stem assembly or actuator, and disconnection of hydraulic or electrical lines.

c. Repair - Performance of welding or grinding on a valve to correct a defect.

d. Replacement - Installation of a new valve, valve part, or a modification to the valve.

TEST TYPES TO WORK SCOPE REQUIRED

Test Types	Work Scope
EC,EO,STC,STO,FS	Routine servicing, maintenance, repair or replacement.
LJ	Specified maintenance, repair or replacement. Specified maintenance: repacking, lowering of motor-operated valve closing torque switch setting, replacement of motor-operated valve torque switch mechanism, adjustment of motor-operated valves that close on limit switch, disassembly of valve internals, removal of the valve actuator or alteration to seating surface. MOVATS Data may be used as an alternative test to verify existing conditions have not degraded.
LW	Specified maintenance, repair or replacement. Specified maintenance: alteration to seating surface, lowering of motor-operated valve closing torque switch setting, replacement of motor-operated valve torque switch mechanism, adjustment of motor-operated valve closing unit switch for motor-operated valves that close on limit switch. MOVATS Data may be used as an alternative test to verify existing conditions have not degraded.
LK	Same as LW.
LD	Same as LW.
PI	Specified maintenance, repair or replacement. Specified maintenance: reconnection of the valve actuator, adjustment or disassembly of limit switch mechanism for remote position indicator, or terminating/reterminating wiring for the remote indicator circuitry. Exception: No retest for replacement of fuses or light bulbs. Lifting and landing a single lead requires no retest.

Test Types	Work Scope
RT	Specified maintenance, repair or replacement. Specified maintenance: adjustment of setting, disassembly, internal gagging, remachining or cleaning of any critical part, lapping of seat and disc or any other operation which may affect the flow passage, capacity, function or pressure retaining integrity. NOTE: Changing the blowdown setting and/or the nameplate set pressure for safety and safety relief valves requires testing by other than the bench test method.
RD	Maintenance, repair or replacement.
EX	None (Manufacturer's Data acceptable).

STEPS TO DETERMINE RETEST REQUIREMENTS

Step 1: Locate the valve or device by MPL number in the Valve Test Table (Section 3.4).

Step 2: If the work scope is applicable to the test requirement then the surveillance located on the valve test table should be performed, however other documents may be used if ASME OM Code requirements are followed.

Step 3: When the work scope is applicable to the test requirement, other means for documenting a retest may be used (i.e., Work Orders). When using other means for documentation of a retest, ensure all ASME OM Code requirements are being followed (i.e., all appropriate retests (EC, EO, STC, STO, PI etc.) are being performed). Also any test conditions established within the applicable surveillance must be met (i.e., flowrate of 7100 GPM for stroke timing of valve). To establish surveillance test conditions within the RETEST document (Work Order) any approved PNPP instruction may be used (e.g., SVI, SOI, IOI, etc.).

This is accomplished by extracting the steps from the appropriate instruction (SVI, SOI, IOI, etc.) and inserting them into the re-testing document (Work Order).

Step 4: If a valve test exists within the pump operability portion of a surveillance instruction, and the pump must be started to test this valve, only the set reference value for the pump need be established. It is not required to perform entire pump data collection (e.g., if flow is set to 7100 GPM to establish conditions for pump data collection, then set flow to 7100 GPM and N/A all other data entries on pump data sheet).

Retest Flowpath

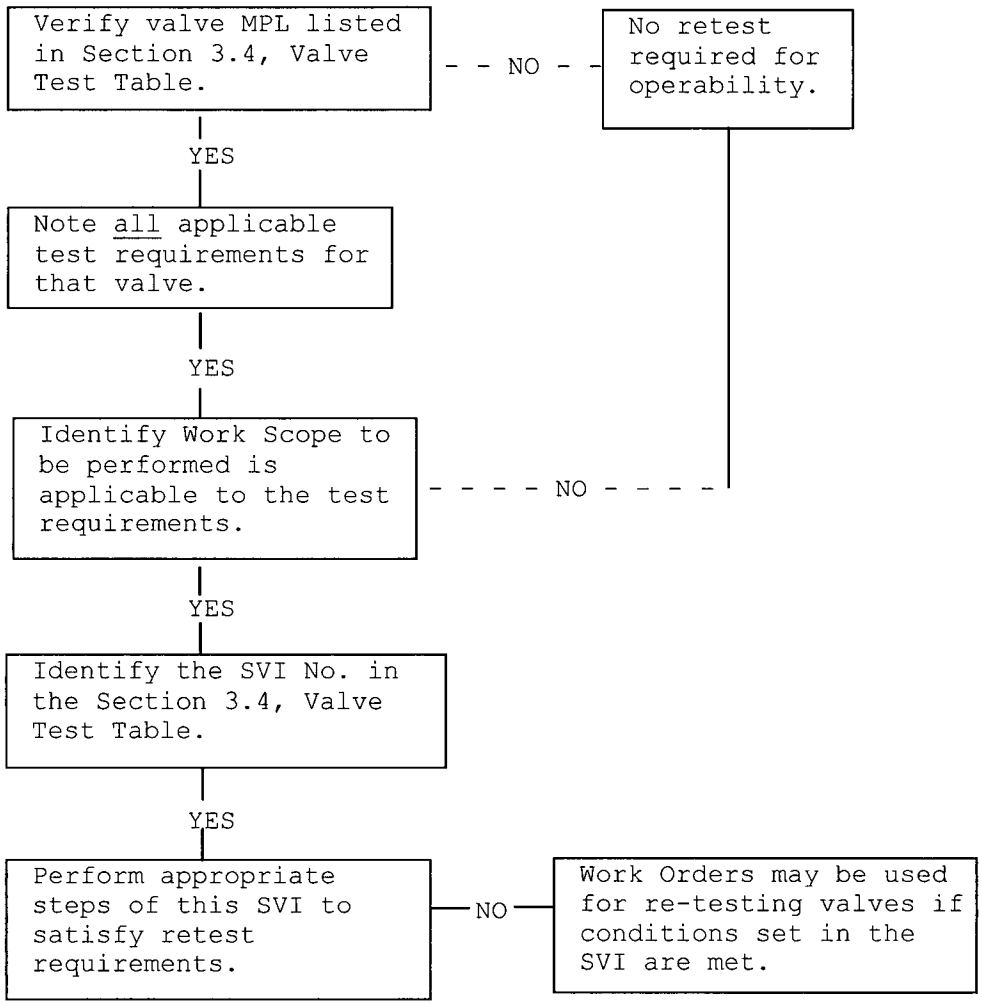

Examples:

1. 1B21-F028A requires the valve seating surface to be lapped per Work Order and the appropriate Surveillance Instructions be used for retest.

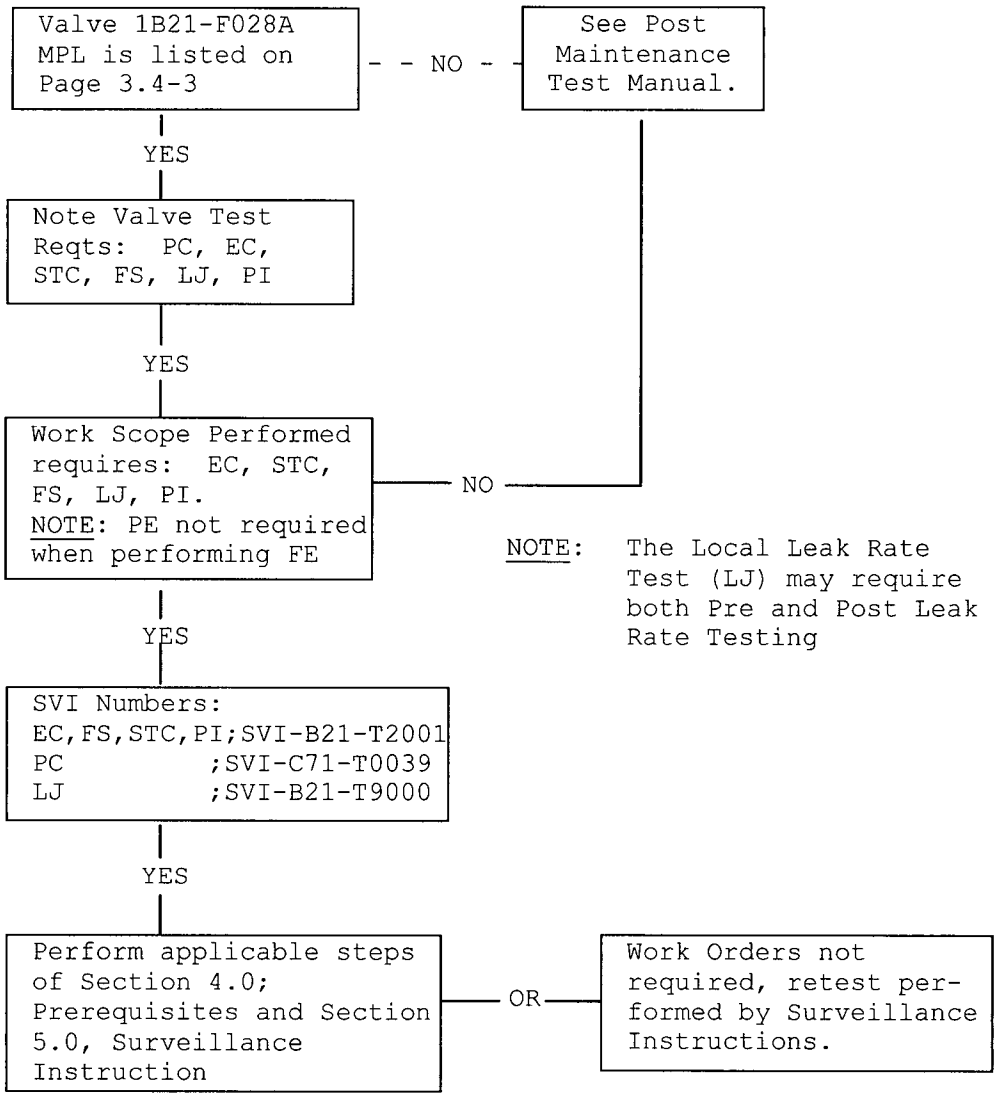

2. 1E12-F025B requires the valve seating surface to be lapped per Work Order and the appropriate Surveillance Instructions be used for retest.

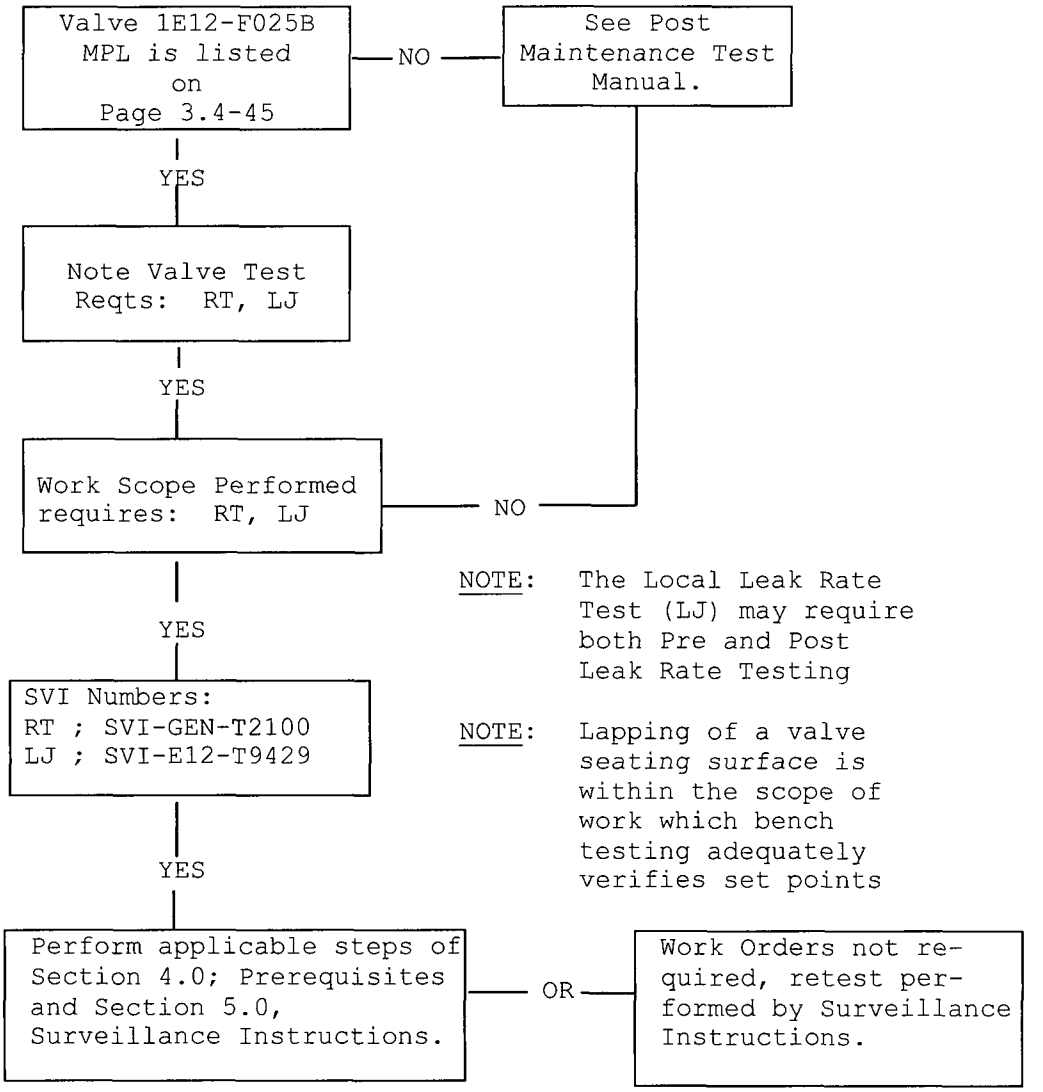

3. 1E12-F024A requires the stem packing to be adjusted to minimize leaking and the retest is to be performed within the Work Order Package.

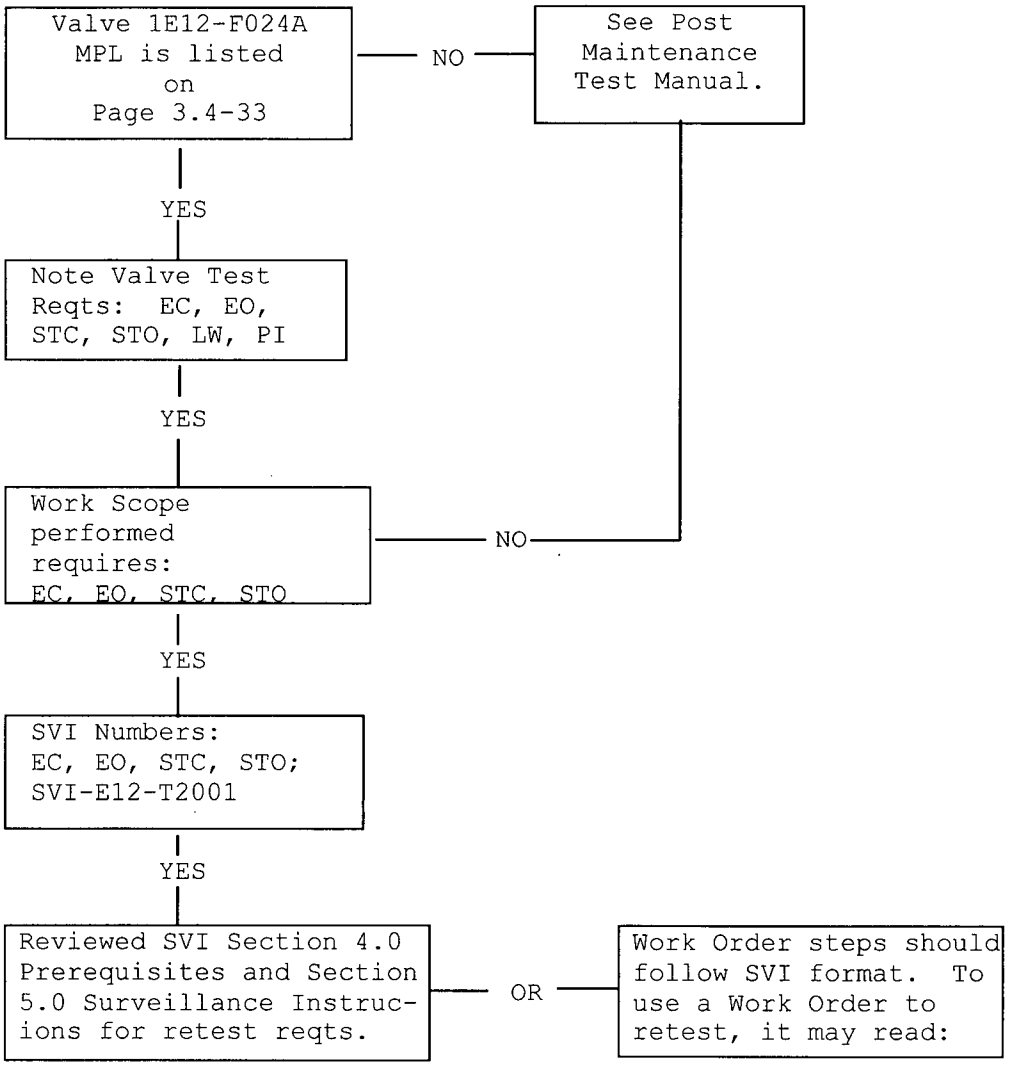

↓

1) Start RHR Pump A (SOI-E12).
2) Establish a flowrate of ≥7100 GPM (SOI-E12).
3) Close 1E12-F024A while measuring and recording stroke time (SVI-E12-T2001).

TABLE 3.1-1

INSERVICE TEST REQUIREMENTS

TEST	TEST NAME	TEST DESCRIPTION
LJ	Containment Isolation Valve	Containment isolation valves will be seat leak tested in accordance with 10CFR50, Appendix J, Option B, with exceptions as detailed in Technical Specification 5.5.12.
LW	Seal System Containment Isolation Valve	Seal System - Containment isolation valves will be seat leak tested in accordance with 10CFR50, Appendix J, Type C Leak Test and PNPP Technical Specification requirements to ensure long term viability of a seal system.
LK	Pressure Isolation Valve	Pressure isolation valves will be seat leak tested in accordance with the OM Code.
LD	Other Isolation Valves	Other Category A valves requiring seat leakage tests per the OM Code.
EO	Exercise Open	Exercise testing of Category A, B or C (Check) valves from the closed to open position.
EC	Exercise Closed	Exercise testing of Category A, B or C (Check) valves from the open to closed position.
STO	Stroke Time Open	Stroke time is the measurement of the time required to exercise a power operated Category A or B valve from the closed to open position required for the valve to perform its function.
STC	Stroke Time Closed	Stroke time is the measurement of the time required to exercise a power operated Category A or B valve from the open to closed position required for the valve to perform its function.
PO	Partial Stroke Open	Partial stroke exercise testing will be performed to confirm partial stroke open capability for power operated Category A or B valves when full stroke exercise is impractical. Partial stroke exercise will also be performed on Category C check valves subsequent to reassembly, if practicable.

TABLE 3.1-1 (Cont.)

INSERVICE TEST REQUIREMENTS

TEST	TEST NAME	TEST DESCRIPTION
PC	Partial Stroke Closed	Partial stroke exercise testing will be performed to confirm partial stroke closed capability for power operated Category A or B valves when full stroke exercise is impractical.
RD	Rupture Device Set Pressure	Device (i.e., rupture disk) actuation set point will be verified in accordance with Appendix I of the OM Code, Section I-3340 or Technical Specification. These devices will be replaced periodically to satisfy testing requirements. This requirement does not apply to rupture discs associated with the scram accumulators.
RC	Replacement Cycling	Power actuated relief valve cycling following a replacement with a pre-tested valve.
RT	Relief Valve Set Pressure	Valve (i.e., relief, safety, safety relief, or power actuated relief valve) set point will be verified in accordance with Appendix I of the OM Code or Technical Specifications.
SP	Relief Device Set Pressure	Device (i.e., vacuum relief or set pressure relief) actuation set point will be verified in accordance with Appendix I of the OM Code, Section I-3370 or Technical Specification. These devices must open and close within a specific set pressure tolerance which differ them from check valves.
EX	Explosive Charge	Testing of explosive charges by firing, per ISTC-5260 of the OM Code, shall be with at least 20% of the charges in a batch fired every 2 years with no charge testing exceeding 10 years.
FS	Fail Safe Test	Valves which change obturator position to perform the specific function by loss of valve actuating power to the actuator (e.g., air operated, spring loaded, solenoid operated and hydraulic operated).
PI	Position Indicator Verification	Valves with remote position indicators will be verified to accurately reflect valve travel direction. This is typically performed every 2 years. For certain MOVs the frequency will reflect that of OMN-1.

TABLE 3.1-2

INSERVICE TESTS FREQUENCY

TEST INTERVAL	OPERATIONAL MODE	FREQUENCY DESCRIPTION
Weekly (W)	Any Mode	At least once every seven (7) days (T/S 5.5.6 states at least once every 92 days with an extension of 25% being permitted T/S SR 3.0.2)
Monthly (M)	Any Mode	At least once every thirty-one (31) days (T/S 5.5.6 states at least once every 92 days with an extension of 25% being permitted T/S SR 3.0.2)
Quarterly (Q)	Any Mode	At least once every three (3) months (T/S 5.5.6 states at least once every 92 days with an extension of 25% being permitted T/S SR 3.0.2)
Cold Shutdown (CS)	Cold Shutdown	Testing which cannot be performed quarterly shall commence within 48 hours of achieving cold shutdown, and continue until all testing is complete or the plant is ready to return to power (e.g., it is not the intent to keep the plant in cold shutdown in order to complete cold shutdown testing). For extended outages, testing need not be commenced in 48 hours provided all valves required to be tested during cold shutdown will be tested prior to plant startup. Testing completed within the quarterly requirements need not be performed in subsequent cold shutdowns.
Refuel Outage (RO)	Refueling Outage	Testing which cannot be performed at cold shutdown shall be completed when the plant is shutdown for the purpose of replacing fuel (T/S 5.5.6 states at least once every 731 days with an extension of 25% being permitted T/S SR 3.0.2). For certain OMN-1 MOVs, a maintenance plan will be used to representing the number of refueling outages or years between tests.
2-Year (2Y)	Any Mode	Testing every two years (T/S 5.5.6 states at least once every 731 days with an extension of 25% being permitted T/S SR 3.0.2).

TABLE 3.1-2

INSERVICE TESTS FREQUENCY

TEST INTERVAL	OPERATIONAL MODE	FREQUENCY DESCRIPTION
2-Year Device (2YD)	Refueling Outage	Testing at each refueling outage or every 2 years whichever is sooner, unless historical data requires more frequent testing (i.e., ISI Class 2, 3, MC and Optional Reclosing Devices).
5-Year (5Y)	Any Mode	Testing every 5 years, with no maximum limit specified for the number of valves to be tested within each interval; however, a minimum of 20% of the valves from each valve group shall be tested within any 24 month interval. This 20% shall consist of valves that have not been tested during the current 5-year interval, if they exist. The interval for any individual valve shall not exceed 5 years (i.e., ISI Class 1 Pressure Relief Valves).
5-Year Replacement (5YR)	Any Mode	Replacing every 5 years, unless historical data indicates a requirement for more frequent replacement (i.e., ISI Class 2, 3, and Optional Non-Reclosing Devices).
10-Year (10Y)	Any Mode	Testing every 10 years, with no maximum limit specified for the number of valves to be tested during any single plant operating cycle; however, a minimum of 20% of the valves from each valve group shall be tested within any 48 months interval. This 20% shall consist of valves that have not been tested during the current 10-year test interval, if they exist. The test interval for any individual valve shall not exceed 10 years (i.e., ISI Class 2, 3, and Optional Pressure Relief Valves).
10-Year Explosive (10YE)	Refueling Mode	At least 20% of the charges shall be fired and replaced at least once every 2 years (T/S 5.5.6 states at least once every 731 days with an extension of 25% being permitted T/S SR 3.0.2) but in no case shall the service life exceed 10 years for a charge.

TABLE 3.1-2

INSERVICE TESTS FREQUENCY

TEST INTERVAL	OPERATIONAL MODE	FREQUENCY DESCRIPTION
Performance Based (PB)	Any Mode	Testing based on a valve's performance history and assigned an interval up to 5 years (an extension of 25% being permitted T/S SR 3.0.2).
Condition Monitoring (CM)	Refueling or On-line	Test frequency specified in the applicable Check Valve Condition Monitoring Program Plan. The test interval for a single valve or Group of valves shall not exceed the test interval specified in the Plan.
Periodic Verification (PV)	Refueling or On-Line	Test frequency specified in the valve test tables for certain motor operated valves reflects the frequency designated by the MOV Program.

3.2 Cold Shutdown Justifications, Refueling Outage Justifications and Relief Requests for Inservice Valve Testing Program

Cold Shutdown Justification

CS-1

System: Feedwater (N27)

Valves: 1B21-F065A, 1B21-F065B

Category: A

Class: 2

Function: Main Feedwater Shutoff Valves

Test Requirements: ISTC-3510, "Exercise Test Frequency"; Active Category A, Category B, and Category C check valves shall be tested nominally every 3 months.

Basis for Justification: Exercising these valves during normal operation would require a significant reduction in power and stopping one line of feedwater flow. Isolation of one line of feedwater flow during normal operation introduces undesirable operational transients and could result in a reactor trip. Partial stroke testing cannot be performed since valves stroke fully on initiation and conformance with the quarterly requirements is impractical for the facility due to the potential for a reactor trip.

This cold shutdown justification had been previously found to be acceptable in a NRC Safety Evaluation dated August 9, 1999 (Log No. PY-NRR/CEI-0989L).

Alternate Testing: Exercise valves during cold shutdown when plant conditions permit isolation of feedwater flow.

Cold Shutdown Justification

CS-2

System: Main Steam System (N11)

Valves: 1N11-F020A, 1N11-F020B, 1N11-F020C, 1N11-F020D

Category: B

Class: 2

Function: Main Steam Shutoff Valve

Test Requirements: ISTC-3510, "Exercise Test Frequency"; Active Category A, Category B, and Category C check valves shall be tested nominally every 3 months.

Basis for Justification: Valves fully stroke on initiation of close signal making partial valve stroke impractical. Full stroke exercising results in loss of steam flow from one main steam line to the turbine creating adverse transients and potential of valve damage due to steam erosion of valve seat. Also, the design of these 28 inch gate valves does not allow exercising against the magnitude of differential pressure encountered without valve damage. Therefore, conformance to the quarterly requirements is impractical for the facility due to the potential for a reactor scram and equipment damage.

This cold shutdown justification had been previously found to be acceptable in a NRC Safety Evaluation dated August 9, 1999 (TAC No. MA3328) (Log No. PY-NRR/CEI-0989L).

Alternate Testing: Exercise valves during cold shutdown when plant conditions permit isolation of Main Steam.

Cold Shutdown Justification

CS-3

System: Reactor Coolant Pressure Isolation Valves - Motor operated (e.g., RHR, LPCS, HPCS, and Feedwater Leakage Control).

Valves: 1E12-F008, 1E12-F009, 1E12-F023, 1E12-F042A, 1E12-F042B, 1E12-F042C, 1E12-F053A, 1E12-F053B, 1E21-F005, 1E22-F004, 1N27-F737, 1N27-F740

Category: A

Class: 1, 2

Function: Provide pressure isolation from high pressure coolant systems (e.g., Rx. Coolant, Feedwater) to other safety-related systems containing low pressure designed components.

Test Requirements: ISTC-3510, "Exercise Test Frequency"; Active Category A, Category B, and Category C check valves shall be tested nominally every 3 months.

Basis for Justification: These pressure isolation motor operated valves maintain one of the two high to low pressure barriers during plant operation. Exercising these valves during plant operation would involve a loss of one isolation barrier. The probability of causing an internal loss of coolant accident is significantly increased by exercising these motor operated valves quarterly. Therefore, conformance to the quarterly requirements is impractical for the facility due to the potential for equipment damage.

This cold shutdown justification had been previously found to be acceptable in a NRC Safety Evaluation dated August 9, 1999 (TAC No. MA3328) (Log No. PY-NRR/CEI-0989L).

Alternate Testing: Exercise valves during cold shutdown when reactor pressure has been reduced to below the design pressure of attached piping and components.

Cold Shutdown Justification

CS-4

System: Reactor Core Isolation Cooling (E51)

Valves: 1E51-F013

Category: A

Class: 1

Function: Provide primary containment isolation and isolation of the RCIC injection to reactor coolant system.

Test Requirements: ISTC-3510, "Exercise Test Frequency"; Active Category A, Category B, and Category C check valves shall be tested nominally every 3 months.

Basis for Justification: The RCIC motor operated injection isolation valve is normally closed and interlocked with the turbine steam supply valve to prevent inadvertent opening if the RCIC system is not in operation. System design precluded the installation of a RCIC pump discharge check valve, thus the motor operated injection isolation valve provides a second isolation between high pressure and low pressure RCIC components. Testing of the RCIC injection isolation valve during plant operation would require either defeating the safety interlock, increasing the likelihood of an internal loss of coolant accident, or using the RCIC system to inject into the reactor vessel, which would cause the undesirable effects of nozzle thermal stress cycling and moisture carry-over. Therefore, conformance to the quarterly requirements is impractical for the facility due to the potential for equipment damage.

This cold shutdown justification had been previously found to be acceptable in a NRC Safety Evaluation dated August 9, 1999 (TAC No. MA3328) (Log No. PY-NRR/CEI-0989L).

Alternate Testing: Exercise valve during cold shutdown when system conditions permit opening the valve without the potential for equipment damage.

Cold Shutdown Justification

CS-5

System: Nuclear Boiler (B21)

Valves: 1B21-F022A, 1B21-F022B, 1B21-F022C, 1B21-F022D, 1B21-F028A, 1B21-F028B, 1B21-F028C, 1B21-F028D

Category: A

Class: 1

Function: Main Steam Isolation Valves

Test Requirements: ISTC-3510, "Exercise Test Frequency"; Active Category A, Category B, and Category C check valves shall be tested nominally every 3 months.

Basis for Justification: Full stroke exercising requires a reduction in power to approximately 80% due to the loss of steam flow from one main steam line to the turbine. Recent industry information indicates that closing these valves with high steam flow in the line may be a large contributing factor in observed seat degradation. The valves are designed for and receive a partial stroke exercise quarterly to verify proper position indication, limit switch actuation and partial fail safe with full steam flow during plant operation. Partial stroke exercising is accomplished by bleeding down the accumulator air supply to the operator. Therefore, conformance to the quarterly requirements is impractical for the facility due to the potential for equipment damage.

This cold shutdown justification had been previously found to be acceptable in a NRC Safety Evaluation dated August 9, 1999 (TAC No. MA3328) (Log No. PY-NRR/CEI-0989L).

Alternate Testing: Exercise and fail safe test valves during cold shutdown when system conditions permit full closure of the MSIVs without the potential for equipment damage.

Cold Shutdown Justification

CS-6

System: Control Rod Drive Hydraulic (C11)

Valves: 1C11-F083

Category: A

Class: 2

Function: Condensate Water to Control Rod Drive Outboard Containment Isolation Valve.

Test Requirements: ISTC-3510, "Exercise Test Frequency"; Active Category A, Category B, and Category C check valves shall be tested nominally every 3 months.

Basis for Justification: Closing of this valve during plant operation would result in a loss of drive and cooling water to the control rods. This would inhibit normal operation of the control rods possibly resulting in a reactor shutdown and/or overheating of the control rods causing equipment damage. This valve fully strokes upon initiation and cannot be partial stroke tested. Therefore, conformance to the quarterly requirements is impractical for the facility due to the potential for equipment damage.

This cold shutdown justification had been previously found to be acceptable in a NRC Safety Evaluation dated August 9, 1999 (TAC No. MA3328) (Log No. PY-NRR/CEI-0989L).

Alternate Testing: Exercise valve during cold shutdown when system conditions permit isolation of drive and cooling water to the control rods without the potential for equipment damage.

Cold Shutdown Justification

CS-7

System: Reactor Coolant Pressure Isolation Check Valves (RHR, LPCS, and HPCS) of a testable nature.

Valves: 1E12-F041A, 1E12-F041B, 1E12-F041C, 1E21-F006, 1E22-F005,

Category: AC

Class: 1

Function: Provide pressure isolation of the reactor coolant pressure boundary between the high pressure reactor coolant system and other safety-related systems containing low pressure designed components.

Test Requirement: ISTC-3510, "Exercise Test Frequency"; Active Category A, Category B, and Category C check valves shall be tested nominally every 3 months.

Basis for Justification: These pressure isolation valves maintain one of the two high to low pressure barriers during plant operation. To exercise these valves during plant operation would involve a loss of one isolation barrier. The possibility of an internal loss of coolant accident is significantly increased by exercising these valves quarterly. Therefore, conformance to the quarterly exercise requirement is impractical for the facility due to the potential for equipment damage.

The closed exercise will be satisfied by obtaining the closed position indicating signal following the open exercise during cold shutdown.

This cold shutdown justification had been previously found to be acceptable in a NRC Safety Evaluation dated August 9, 1999 (TAC No. MA3328) (Log No. PY-NRR/CEI-0989L) and FENOC response to an RAI dated February 26, 2001 (PY-CEI/NRR-2549L).

Alternate Testing: Perform valve exercising (open and close) during cold shutdown when reactor pressure has been reduced to below the design pressure of attached piping and components.

Cold Shutdown Justification

CS-8

System: RHR Relief Line Discharge to Suppression Pool

Valves: 1E12-F605A and F605B

Category: C

Class: 2

Function: Vacuum breakers ensure discharge lines equalize to the environment's pressure.

Test Requirement: ISTC-3510, "Exercise Test Frequency"; Active Category A, Category B, and Category C check valves shall be tested nominally every 3 months.

Basis for Justification: The RHR relief line to suppression pool discharge vacuum breakers provide a means for releasing a vacuum developed in the discharge line from condensing steam. The vacuum breakers are normally closed during plant operation. The forward flow exercising of these valves can be verified manually. Exercising these valves during operation would require entry into the containment. Also, there is no method to prevent actuation of the relief valves that discharge into these discharge lines, placing personnel at risk if exercising was performed. Therefore, quarterly testing is impractical during power operations for personnel safety reasons.

The closed exercise is satisfied by witnessing the valves return to the closed position after the valves have been manually open exercised.

This cold shutdown justification had been previously found to be acceptable in a NRC Safety Evaluation dated August 9, 1999 (TAC No. MA3328) (Log No. PY-NRR/CEI-0989L).

Alternate Testing: Perform valve exercising (open, closed) during cold shutdown when containment entry is possible without concerns for personnel safety.

Cold Shutdown Justification

CS-9

System: Reactor Water Cleanup System (G33)

Valves: 1G33-F001, 1G33-F004, 1G33-F039, 1G33-F040, 1G33-F053, 1G33-F054

Category: A

Class: 1

Function: To provide containment isolation of the Reactor Water Cleanup System.

Test Requirements: ISTC-3510, "Exercise Test Frequency"; Active Category A, Category B, and Category C check valves shall be tested nominally every 3 months.

Basis for Justification: The Reactor Water Cleanup System is inservice during normal plant operation and provides a backup function in post accident cleanup. This system ensures that reactor coolant pH, chlorides, conductivity, and activity are maintained within specified limits. These limits are to prevent the likelihood of exceeding 10CFR100 guidelines or allowing stress corrosion cracking of the stainless steel systems which is important since the facility is currently monitoring indicated feedwater nozzle cracks for size propagation. A closure of any valve during surveillance testing would require the removal of the system from service causing prolonged system inoperability. PNPP (BWR6) has "hot leg" RWCU pumps with pump seal run times greater than 5 years. The thermal transients placed on our RWCU CAN-6 pump seals during a shutdown from rated temperature and pressure significantly increases the chance of a RWCU pump seal failure. Seal failure results in an expensive and dose intensive work activity (approximately $300,000.00 and 1.5 Rem). Therefore, quarterly testing is impractical due to unnecessary system equipment challenges.

This cold shutdown justification had been previously found to be acceptable as CS-10 in a NRC Safety Evaluation dated August 9, 1999 (TAC No. MA3328) (Log No. PY-NRR/CEI-0989L) and FENOC response to an RAI dated February 26, 2001 (PY-CEI/NRR-2549L).

Alternate Testing: Exercise valves during cold shutdown when plant conditions permit isolation of RWCU to preclude unnecessary system equipment challenges.

Cold Shutdown Justification

CS-10

System: Containment Atmosphere Monitoring System

Valves: 1D23-F010A, 1D23-F010B, 1D23-F020A, 1D23-F020B, 1D23-F030A, 1D23-F030B, 1D23-F040A, 1D23-F040B, 1D23-F050

Category: A

Class: 2

Function: Provide instrumentation isolation in case of an instrument line failure to maintain containment integrity.

Test Requirements: ISTC-3510, "Exercise Test Frequency"; Active Category A, Category B, and Category C check valves shall be tested nominally every 3 months.

Basis for Justification: The Containment Atmosphere Monitoring System provides highly reliable instrumentation for detecting abnormal conditions in the containment, drywell and the suppression pool, and for monitoring of these areas after postulated accidents. These valves have a normal and accident position as open. Opening and closing of these valves will cause unanalyzed perturbations which may initiate the trip logic associated with the instrumentation being isolated, which could cause a plant shutdown to occur. These valves affect instrumentation for five (5) Emergency Safety Feature Systems and more than ten (10) Limiting Condition of Operation Technical Specifications. Therefore, quarterly testing is impractical since testing could result in a plant trip.

This cold shutdown justification had been previously found to be acceptable as CS-11 in a NRC Safety Evaluation dated August 9, 1999 (TAC No. MA3328) (Log No. PY-NRR/CEI-0989L).

Alternate Testing: Exercise valves during cold shutdown when plant conditions permit closure of these valves without the potential for a plant trip.

Cold Shutdown Justification

CS-11

Systems: Residual Heat Removal (RHR)

Valves: 1E12-F037A, 1E12-F037B

Category: A

Class: 2

Function: These valves are used during refueling activities to provide an alternate mode of reactor vessel shutdown cooling when reduced turbulence and improved water clarity is necessary.

Test Requirements: ISTC-3510, "Exercise Test Frequency"; Active Category A, Category B, and Category C check valves shall be tested nominally every 3 months.

Basis for Justification: These valves (1E12-F037A and 1E12-F037B) provide isolation between the RHR System and the Upper Containment Pool (UCP). A reactor pressure interlock is provided to prevent inadvertent valve opening above 135 psig. Overriding this interlock to test these valves will provide an alternate flow path that would divert flow from the reactor vessel if a LPCI initiation were to occur. Also testing would open an isolation boundary between the higher energy piping upstream of the interlocked valve and the lower energy piping downstream of the interlocked valve. Therefore, quarterly testing is impractical due to system design and the potential for equipment damage.

This cold shutdown justification had been previously found to be acceptable as CS-12 in a NRC Safety Evaluation dated August 9, 1999 (TAC No. MA3328) (Log No. PY-NRR/CEI-0989L) and FENOC response to an RAI dated February 26, 2001 (PY-CEI/NRR-2549L).

Alternate Testing: Exercise valves during cold shutdown when reactor pressure has been reduced to a level that the potential for equipment damage is not a concern.

Cold Shutdown Justification

CS-12

System: Residual Heat Removal Head Spray Line (E12)

Valve: 1E12-F019

Category: AC

Class: 1

Function: Provide a flowpath for RHR spray to the reactor vessel dome to condense steam accumulated in the upper portion of the reactor vessel.

Test Requirement: ISTC-3510, "Exercise Test Frequency"; Active Category A, Category B, and Category C check valves shall be tested nominally every 3 months.

Basis of Justification:

This simple check valve is within the normal flowpath for RHR spray to the reactor vessel head. The simple check valve has no external means for exercising and must rely on system operation (i.e., change in flow) to ensure that the valve opens to the position required to fulfill its function.

During plant operation this normally closed check valve performs a pressure isolation safety function. Its safety function prevents over-pressurization of the Residual Heat Removal Loop A low pressure piping from either 1) reactor vessel pressure or 2) RCIC operation when controlling RPV level and pressure. Therefore, system/component design makes compliance with the quarterly open exercise requirements impractical.

Each plant shutdown to cold conditions should allow RHR head spray to be periodically initiated. Spraying the reactor vessel dome condenses steam accumulated in the upper portion of the reactor vessel. Initiation of head spray flow provides for a full-stroke exercise open of the check valve to fulfill its function. The Integrated Operating Instruction (IOI) note's that if only one RHR loop is to be used for Shutdown Cooling, it is preferable to use RHR Loop A because only this loop is capable of head spray.

This had been previously found to be acceptable, as a valve relief request, in a NRC Safety Evaluation dated April 5, 1993 (Log No. PY-NRR/CEI-0629L).

Alternate Testing: Perform valve open exercise during cold shutdowns when RHR Loop A is capable of initiating head spray.

Cold Shutdown Justification

CS-13

System: Reactor Core Isolation Cooling (E51)

Valves: 1E51-F065, 1E51-F066

Category: AC

Class: 1

Function: These check valves provide the normal flowpath for RHR spray to the reactor vessel head and RCIC operation controlling RPV level and pressure.

Test Requirement: ISTC-3510, "Exercise Test Frequency"; Active Category A, Category B, and Category C check valves shall be tested nominally every 3 months.

Basis of Justification: These simple check valves are within the normal flowpath for both 1) RHR spray to the reactor vessel head and 2) RCIC operation when controlling RPV level and pressure. Both check valves have their own unique external exercising device. These valves satisfy the necessary open obturator movement by; relying on system operation (i.e., change in flow) or using the external exercising device.

During plant operation, these normally closed check valves perform the reactor coolant system (RCS) pressure isolation safety function. Their safety function is required to prevent over-pressurization of either the Residual Heat Removal A Loop and/or the RCIC System low pressure piping.

Additionally, limitations exist for the external exerciser's use. Both exercisers will not properly function unless minimum resistance to obturator movement (i.e., low differential pressure) exists. Therefore, system/ valve design makes compliance with the quarterly open exercise requirements impractical.

Testing during plant shutdown to cold conditions could be accomplished by initiating RHR head spray. Spraying the reactor vessel dome condenses steam accumulated in the upper portion of the reactor vessel. Initiation of head spray flow provides the conditions to satisfy a full-stroke exercise open of both check valves to the position required to fulfill its function. The Integrated Operating Instruction (IOI) note's that if only one RHR loop is to be used for Shutdown Cooling, it is preferable to use RHR Loop A because only this loop is capable of head spray.

Exercising the check valves open using the RCIC system, (i.e., during plant operation, for controlling RPV level and pressure) would be considered an Emergency Safety Feature (ESF) actuation. If the initiation was caused by Level 2 in the reactor vessel or manual initiation it would trip the Main Turbine and Reactor Feed Pump Turbines. As such RCIC system operation would not be considered an option to satisfy the quarterly open exercise.

Additionally, during plant cold shutdown conditions local access would be afforded for use of the check valve external exercisers. However, the operation of these exercisers would still be limited by ALARA and test duration concerns.

This had been previously found to be acceptable, as a valve relief request, in a NRC Safety Evaluation dated April 5, 1993 (Log No. PY-NRR/CEI-0629L).

Alternate Testing: Perform valve open exercise during cold shutdowns by either 1) RHR Loop A initiating head spray or 2) for 1E51-F065 by using the external exercisers as plant conditions would dictate.

Refueling Outage Justification

RO-1

System: Residual Heat Removal System

Valves: 1E12-F558A, 1E12-F558B

Category: AC

Class: 2

Function: These check valves are located in the RHR Heat Exchangers vent line back to containment and serve as Containment Isolation Valves.

Test Requirement: ISTC-3510, "Exercise Test Frequency"; Active Category A, Category B, and Category C check valves shall be tested nominally every 3 months.

Basis for Justification: These check valves are located in an open ended line leading from the RHR Heat Exchangers to the drywell suppression pool. To verify that these valves exercise to the closed position requires installation of test equipment inside containment and installation of a blank flange, also located in the containment. This evolution would cause an open flowpath from the drywell to the containment during the time required for installation and removal of this flange. The verification that these valves exercise to the open position also requires test equipment to be installed inside the containment, increasing the exposure to radiation of those involved in the testing. Therefore, quarterly or cold shutdown testing is impractical due to system design and geometry as well as personnel radiation exposure.

This refueling outage justification had been previously found to be acceptable in a NRC Safety Evaluation dated August 9, 1999 (TAC No. MA3328) (Log No. PY-NRR/CEI-0989L)

Alternate Testing: As an alternative to the exercise requirements of the OM Code, these valve may be included in the Check Valve Condition Monitoring Program per ISTC-5222 and Appendix II.

or

Exercising to verify open and closed positions shall be performed on a refueling outage frequency when plant conditions allow a containment entry to facilitate the use of temporary test equipment without exposing personnel to excessive radiation.

Refueling Outage Justification

RO-2

System: As applicable

Valves: 1E51-F030, 1P45-F575, 1E21-F501, 1E22-F007

Category: C

Class: 2 and 3

Function: These complex (1E51-F030, 1P45-F575, 1E21-F501)and simple (1E22-F007) check valves perform different system functions which are described within the Basis for Justification.

Test Requirement: ISTC-3510, "Exercise Test Frequency"; Active Category A, Category B, and Category C check valves shall be tested nominally every 3 months.

Basis for Justification: The complex valves are of a unique design called Duo-Check. The Duo-Check design is constructed as an integral unit permitting removal and installation in the same manner as an ordinary pipe orifice. The valve's removal for inspection and exercising is accomplished without any disassembly of the obturator or its actuating components. The exercise of a Duo-Check valve is similar to other check valves such as vacuum breakers whose obturator is exposed to permit direct observation.

1E22-F007 is a simple check and serves as the inboard valve of a series pair in the discharge path of a safety related keep fill pump. It provides the high to low pressure interface to prevent over-pressurization of the low pressure piping.

1E51-F030

1E51-F030 is a check valve located in the supply line from the suppression pool (backup source) for the RCIC system. The preferred source of water for the RCIC system is the condensate storage tank (CST). PNPP maintains the RCIC system as a "clean" system with minimal internal contamination by preferentially using the CST as the water supply during normal RCIC system operation including testing. Minimizing RCIC system contamination supports ALARA goals as well as reduces radwaste generation resulting from system flushes.

These operational considerations preclude establishment of flow in the involved line during plant operation, cold shutdowns or refueling outages.

The system would have to be substantially redesigned and modified to perform the code required testing. Valve removal and inspection with exercising to assess operational readiness provides a reasonable alternative to the Code test method.

At a refueling frequency valve removal and manual exercising with closure verification ensures operational readiness. Proper orientation of this valve is achieved through direct visual observation. Visual verification of orientation upon reinstallation is sufficient to ensure operability and is the only practical method since initiation of flow through this line is undesirable.

1P45-F575

1P45-F575 is a check valve in a line providing an alternative emergency source of water from the Emergency Service Water (ESW) system (i.e., raw untreated water from Lake Erie) for the RHR system. This valve is one valve in a series of three normally closed valves. Flow through this line is extremely undesirable except under actual emergency conditions. This emergency line-up is never expected to be used.

These operational considerations preclude establishment of flow in the involved line during plant operation, cold shutdowns or refueling outages. The system would have to be substantially redesigned and modified to perform the code required testing. Valve removal and inspection with exercising to assess operational readiness provides a reasonable alternative to the Code test method.

At a refueling frequency valve removal and manual exercising with closure verification ensures operational readiness. Proper orientation of these valves is achieved through direct visual observation. Visual verification of orientation upon reinstallation is sufficient to ensure operability and is the only practical method since initiation of flow through this line is undesirable.

1E21-F501

1E21-F501 is a check valve in the LPCS minimum flow and test return to the suppression pool. This valve is exercised open quarterly by obtaining proper LPCS flow. The piping configuration does not include isolation capability downstream of the check valve, precluding closure verification without installation of a blind flange.

Installation of the blind flange requires extensive preparation, equipment staging and would result in a significant period of inoperability of the LPCS (estimated 1 - 2 days).

Although the possibility exists to perform this reverse flow test during refueling outages, the test requires expenditure of significantly more resources than simply removing the valve for exercise testing. Also this valve is a TRW Mission Duo check valve, which when removed may be better assessed by visual inspection rather than by testing. When removed the check valves spring tangs and hinge pin may be inspected to ensure they have not failed or worn to the point of failure. Therefore, it is impractical to test when the disassembly, inspection and reassembly of the valve provides a superior assessment of the valves functionality.

At a refueling frequency valve removal and manual exercising including closure verification ensures operational readiness. Visual verification of proper orientation during installation and verification of flow after installation ensures operability.

1E22-F007

System configuration does not include test connections, which precludes closure verification of the 1E22-F007. The system would have to be redesigned and modified to allow performance of the quarterly or cold shutdown Code required testing. Disassembly and inspection of this valve to assess its' closure capability will be performed in accordance with the Code at a refueling outage frequency.

Refueling Outage Justification

RO-2 (Continued)

This refueling outage justification had been previously found to be acceptable in a NRC Safety Evaluation dated August 9, 1999 (TAC No. MA3328) (Log No. PY-NRR/CEI-0989L) and FENOC response to an RAI dated February 26, 2001 (PY-CEI/NRR-2549L).

Alternate Testing: As an alternative to the exercise requirements of the OM Code, these valve may be included in the Check Valve Condition Monitoring Program per ISTC-5222 and Appendix II.

or

At a refueling frequency each valve is removed and manually exercised including closure verification. Visual verification of proper orientation is performed upon reinstallation.

Refueling Outage Justification

RO-3

System: Nuclear Closed Cooling Water System (P43)

Valves: 1P43-F055, 1P43-F140, 1P43-F215, 1P43-F355, 1P43-F400, 1P43-F410

Category: A (1P43-F055, 1P43-F140, 1P43-F215)
B (1P43-F355, 1P43-F400, 1P43-F410)

Class: 2

Function: Containment (i.e., drywell and primary) isolation valves for cooling water to the reactor recirculation coolant pumps and other safety-related systems.

Test Requirements: ISTC-3510, "Exercise Test Frequency"; Active Category A, Category B, and Category C check valves shall be tested nominally every 3 months.

Basis for Justification: These valves are the inlet and outlet isolation valves for nuclear closed cooling water. Closing these valves would result in a loss of cooling water to the reactor recirculation pumps and motors causing serious damage to the equipment. The recirculation pumps are used during all modes of operation except for refueling to prevent reactor vessel water stratification. Therefore, conformance to the quarterly and cold shutdown requirements are impractical for the facility due to the potential for equipment damage.

This refueling outage justification had been previously found to be acceptable in a NRC Safety Evaluation dated August 9, 1999 (TAC No. MA3328) (Log No. PY-NRR/CEI-0989L).

Alternate Testing: Exercise valves during each refueling outage when the reactor recirculation pumps can be removed from service.

Refueling Outage Justification

RO-4

System: Reactor Water Cleanup (G33)

Valves: 1G33-F052A, 1G33-F052B

Category: C

Class: 2

Function: Normal return flow path for Reactor Water Cleanup (RWCU) water to the reactor vessel via feedwater.

Test Requirements: ISTC-3510, "Exercise Test Frequency"; Active Category A, Category B, and Category C check valves shall be tested nominally every 3 months.

Basis for Justification: These simple check valves are within the normal flowpath for reactor water cleanup return to feedwater system. The RWCU returns to the Residual Heat Removal (RHR) shutdown cooling return line, which then returns to Feedwater (FW). The current test method requires access to the steam tunnel, which is inaccessible during power operations and a high radiation and highly contaminated area during cold shutdowns. Also, testing requires the isolation and venting of the RWCU return line to the reactor vessel (via the FW system). The RWCU system is necessary for cleanup and chemistry control caused by transients (i.e., shutdowns) and loss of this capability could prolong any shutdown. Therefore, quarterly or cold shutdown testing is impractical due to unnecessary removal of plant safety systems (Residual Heat Removal shutdown cooling and Feedwater) from service resulting in unnecessary cycling of safety related systems. Also testing would result in unnecessary personnel radiation exposure.

This refueling outage justification had been previously found to be acceptable in a NRC Safety Evaluation dated August 9, 1999 (TAC No. MA3328) (Log No. PY-NRR/CEI-0989L) and FENOC response to an RAI dated February 26, 2001 (PY-CEI/NRR-2549L).

Alternate Testing: Valve exercising to the opened and closed position shall be performed during refueling outages when RWCU can be removed from service and when the steam tunnel can be safely entered with out exposing personnel to excessive amounts of radiation.

Refueling Outage Justification

RO-5

System: Nuclear Boiler

Valves: 1B21-F036C, D, G, H, J, K, M, N, R, S
1B21-F036U, 1B21-F039A, B, E, F, L, P, T, V

Category: C

Class: 3

Function: To prevent depressurization of the non-ADS SRV's air accumulators on a loss of instrument air and the ADS SRV's air accumulators on a loss of Safety Related Instrument Air.

Test Requirement: ISTC-3510, "Exercise Test Frequency"; Active Category A, Category B, and Category C check valves shall be tested nominally every 3 months.

Basis for Justification: To perform the open and close exercise of these non-ADS and ADS accumulator supply check valves on a quarterly or cold shutdown frequency, access is required into the drywell for valve manipulations, test equipment installation and depressurization of the instrument air. Performance of these tests during operation would expose personnel to high neutron radiation. During Cold Shutdowns, personnel would still experience unnecessary radiation exposure. This testing would also make the Instrument Air System (which supplies engineered safety features systems) to the containment and drywell and the Safety Related Instrument Air System inoperative for an extended period of time. Therefore, quarterly or cold shutdown testing is impractical due to isolation of instrument air to safety-related systems and extensive test setup time.

This refueling outage justification had bee previously found to be acceptable in a NRC Safety Evaluation dated August 9, 1999 (TAC No. MA3328) (Log No. PY-NRR/CEI-0989L).

Alternate Testing: Perform valve exercising (open, closed) during refueling outages when the drywell can be safely entered without exposing personnel to excessive amounts of radiation.

Refueling Outage Justification

RO-6

System: Fire Service Carbon Dioxide (P54)

Valve: 1P54-F1098

Category: AC

Class: 2

Function: This valve is the inboard containment isolation valve for the Recirculation Pump Carbon Dioxide System. Upon sensing a fire (heat) the CO2 is designed to extinguish the fire by releasing a measured amount of carbon dioxide to the affected area.

Test Requirement: ISTC-3510, "Exercise Test Frequency"; Active Category A, Category B, and Category C check valves shall be tested nominally every 3 months.

Basis for Justification: To adequately exercise the carbon dioxide supply check valve in the open and closed direction requires isolation of the penetration, which in turn would require an alternate method of extinguishing a possible fire (local CO2 fire extinguishers) being available. Access to the drywell is not available during operation or during all normal cold shutdowns in order to stage the alternate method of fire extinguishment. Therefore, quarterly or cold shutdown testing is impractical due to personnel and equipment safety.

This refueling outage justification had been previously found to be acceptable in a NRC Safety Evaluation dated August 9, 1999 (TAC No. MA3328) (Log No. PY-NRR/CEI-0989L).

Alternate Testing: As an alternative to the exercise requirements of the OM Code, these valve may be included in the Check Valve Condition Monitoring Program per ISTC-5222 and Appendix II.

or

Perform valve exercising in the open and closed directions during refueling outages when the drywell is accessible.

Refueling Outage Justification

RO-7

Systems: As applicable

Valves: 1E22-F039, 1E51-F021, 1E51-F040, 1E51-F090

Category: AC

Class: 2

Function: These check valves serve various functions to allow for proper operation of the HPCS and RCIC systems. Each valve's function will be described briefly in the Basis for Justification.

Test Requirements: ISTC-3510, "Exercise Test Frequency"; Active Category A, Category B, and Category C check valves shall be tested nominally every 3 months.

Basis for Justification: RCIC Pump Minimum Flow Check Valve 1E51-F021 allows for pump minimum flow when operating in a shutoff head or low flow conditions and rapid penetration isolation on loss of pump prior to closure of the containment isolation valve.

RCIC Turbine Exhaust Line Check Valve 1E51-F040 allows for turbine exhaust steam to be transferred into the suppression pool as part of the heat cycle and rapid penetration isolation on loss of the turbine prior to closure of the containment isolation valve. Both of these check valves are located in the RHR "A" Heat Exchanger Room. Accessing the valves for testing requires entering a high radiation area during normal plant operation or cold shutdown when RHR "A" Loop is in the shutdown cooling mode of operation. Verifying that these valves have been exercised to their closed seat position is performed utilizing standard seat leakage techniques which require significant test duration for valve lineups, equipment installation and removal.

Check valve 1E22-F039 is located in the HPCS return line to the Condensate Storage Tank and serves as a thermal relief device to preclude an over pressure condition in this line. Opening of the valve is accomplished quarterly when the HPCS pump recircs back to the CST. However, verification of valve closure is performed using standard seat leakage techniques which require significant test duration for valve lineups, draining the main condensate return header, equipment installation and removal.

Check valve 1E51-F090 is located in the RCIC return line to the Condensate Storage Tank and serves as a thermal relief device to preclude an over pressure condition in this line. Opening of the valve is accomplished quarterly when the RCIC pump recircs back to the CST. However, verification of valve closure is performed using standard seat leakage techniques which require significant test duration for valve lineups, draining the main condensate return header, equipment installation and removal.

Therefore, quarterly and cold shutdown testing is impractical due to extended safety system unavailability as well as unnecessary personnel radiation exposure.

This refueling outage justification had been previously found to be acceptable in a NRC Safety Evaluation dated August 9, 1999 (TAC No. MA3328) (Log No. PY-NRR/CEI-0989L)

Alternate Testing: Verification of valve closure capability will be performed during refueling outages when system conditions permit sufficient time to perform seat leakage testing.

or

As an alternative to the exercise requirements of the OM Code, the 1E51-F040 valve may be included in the Check Valve Condition Monitoring Program per ISTC-5222 and Appendix II.

Refueling Outage Justification

RO-8

System: Combustible Gas Control System

Valves: 1M51-F531A, 1M51-F531B, 1M51-F532A, 1M51-F532B, 1M51-F618A, 1M51-F618B

Category: C

Class: 2

Function: These sample line check valves allow automatic draining of condensate in sample lines and isolation to perform a localized sample.

Test Requirements: ISTC-3510, "Exercise Test Frequency"; Active Category A, Category B, and Category C check valves shall be tested nominally every 3 months.

Basis for Justification: These sample line drain check valves are located inside the drywell and containment. Access to the drywell is not available during plant operation or normal cold shutdowns. Also, the erection of scaffolding over the suppression pool is not permitted during operation.

Performance of the open exercise requires passing air through the valves and monitoring the flowrate. This task involves securing the hydrogen analyzer, installing blank flanges, hanging tags, erecting scaffolding inside containment over the suppression pool for test hookups and restoration after testing. Returning the Hydrogen Analyzer (CGC) to an operable status following testing will require a minimum of 6 hours for temperature stabilization prior to declaring the system as operable.

Ensuring that the valves have exercised to the closed position requires the Hydrogen Analyzer to be operating with access to each valve for installation of test equipment to allow measurement of the bypass flow. Since entry into the drywell is not always possible during each cold shutdown and scaffolding (or ladder) is required, establishing the test conditions places a significant impact on the plant by the extended duration for test setup.

This refueling outage justification had been previously found to be acceptable in a NRC Safety Evaluation dated August 9, 1999 (TAC No. MA3328) (Log No. PY-NRR/CEI-0989L)

Alternate Testing: Perform the open and close exercise tests during refueling outages when sufficient time exists for the installation of temporary test equipment and scaffolding.

Refueling Outage Justification

RO-9

System: Residual Heat Removal System

Valves: 1E12-F063A, 1E12-F063B, 1E12-F063C, 1E12-F086

Category: C

Class: 2

Function: These "simple" check valves, 1E12-F063A, 1E12-F063B, 1E12-F063C, and 1E12-F086 provide a means for alternate keepfill of the RHR loop. These valves are also used for system filling and maintenance flush purposes when required.

Test Requirements: ISTC-3510, "Exercise Test Frequency"; Active Category A, Category B, and Category C check valves shall be tested nominally every 3 months.

Basis for Justification: These check valves must close to prevent gross diversion of LPCI injection flow during accident conditions. The Residual Heat Removal (RHR) Systems lack the design provisions to allow Quarterly or Cold Shutdown testing of these check valves without extending system outages for the associated RHR loop. By design the valves must open slightly to provide sufficient flow to maintain RHR pressurized when used for Alternate Keepfill. To maintain RHR pressurized per the USAR, takes approximately 1 gpm for each loop to account for all boundary valve leakage. This flowrate would require these 8 inch check valves to barely break away from their closed seats and may only open one of the two seats on these duo disk check valves. To establish a flow path to ensure the valves are opening sufficiently to verify closure would generate several hundreds of gallons of radwaste. Based on the low flow rate for Alternate Keepfill and radwaste generation, non-intrusive testing would be impractical to verify valve closure. The only means of adequately verifying valve closure is to disassemble and exercise these check valves. Disassembly of these check valves again requires an extended period of inoperability for the associated RHR loop.

The time involved would include tagging, draining, transport to test shop, test equipment setup, testing, transport back to field, tag removal, and filling and venting. Also only a single air operated butterfly valve exists for isolation from the remainder of the P11 system. Failure of this butterfly to provide isolation for check valve removal would require inoperability of the P11 system. Therefore, quarterly and cold shutdown testing is impractical due to unnecessary challenges to safety systems, unnecessary personnel radiation exposure as well as limitations of system design (inability to perform in-situ leak testing).

These check valves have no safety function to open. However, when open they must close if the associated system initiates to ensure bypassing of injection flow does not occur. The opening function of these valves is an operational convenience.

This refueling outage justification had been previously found to be acceptable in a NRC Safety Evaluation dated August 9, 1999 (TAC No. MA3328) (Log No. PY-NRR/CEI-0989L) and FENOC response to an RAI dated February 26, 2001 (PY-CEI/NRR-2549L).

Alternate Testing: Perform valve exercising (open, closed) during refueling outages in conjunction with the check valve disassembly program and ISTC-5221(C).

or

As an alternative to the OM Code requirements the valves may be included in the Check Valve Condition Monitoring Program per ISTC-5222 and Appendix II.

Refueling Outage Justification

RO-10

System: Standby Liquid Control (C41)

Valves: 1C41-F006, 1C41-F007

Category: AC

Class: 1

Function: Standby Liquid Control Injection Check Valve

Test Requirements: ISTC-3510, "Exercise Test Frequency"; Active Category A, Category B, and Category C check valves shall be tested nominally every 3 months.

Basis for Justification: To verify that these check valves exercise to the open position during normal operation would require firing a squib valve and injecting water into the reactor vessel using the SLC pumps. Injecting water during operation could result in adverse plant conditions such as changes in reactivity, power transients, thermal shock induced cracking, a dramatic change in plant water chemistry, and a possible plant trip.

Verification of closure capability of these valves will be satisfied by obtaining a satisfactory seat leakage measurement. Verifying valve closure by any other means is not practical. This testing method requires prolonged periods in the drywell for isolating and draining of the injection line, causing increased radiation exposure. Therefore, quarterly and cold shutdown testing is impractical due to prolonged periods of SLC inoperability, increased exposure to radiation, and extensive test setup time.

This refueling outage justification had been previously found to be acceptable in a NRC Safety Evaluation dated August 9, 1999 (TAC No. MA3328) (Log No. PY-NRR/CEI-0989L).

Alternate Testing: Perform valve exercising (open, closed) during refueling outages when water can be injected into the vessel by SLC and a drywell entry can be made to perform seat leakage testing.

Refueling Outage Justification

RO-11

System: Residual Heat Removal Shutdown Cooling (E12)

Valves: 1E12-F050A, 1E12-F050B

Category: AC

Class: 2

Function: Provide a flowpath for RHR water for shutdown cooling (e.g., using the feedwater nozzles).

Test Requirement: ISTC-3510, "Exercise Test Frequency"; Active Category A, Category B, and Category C check valves shall be tested nominally every 3 months.

Basis for Justification: These simple check valves are within the normal flowpath for shutdown cooling (e.g., using the feedwater nozzles). The valves are normally closed during plant operation and require forward flow exercising. Initiation of shutdown cooling is used to verify forward flow exercising. Both loops of shutdown cooling may not be required during cold shutdown. The initiation of a loop of shutdown cooling requires flushing of the system generating thousands of gallons of liquid radwaste that would have to be processed. Therefore, compliance with the quarterly and cold shutdown requirements is impractical since the generation of massive amounts of liquid radwaste is undesirable.

Verification of valve closure capability will be satisfied by obtaining a satisfactory seat leakage measurement. Verifying valve closure by any other means is not practical. This test requires isolation of a loop of feedwater, reactor water cleanup, shutdown cooling, and involves entry into the drywell and steam tunnel (includes scaffolding). Therefore, quarterly or cold shutdown testing is impractical due to causing prolonged losses of reactor vessel heat removal sources and loss of cleanup water source, and increased exposure to radiation.

This refueling outage justification had been previously found to be acceptable in a NRC Safety Evaluation dated August 9, 1999 (TAC No. MA3328) (Log No. PY-NRR/CEI-0989L) and FENOC response to an RAI dated February 26, 2001 (PY-CEI/NRR-2549L).

RO-11 (Continued)

Alternate Testing: Perform valve exercising (open and closed) during refueling outages when plant conditions permit forward exercising and the performance of seat leakage testing.

Refueling Outage Justification

RO-12

System: Residual Heat Removal Head Spray Line (E12)

Valve: 1E12-F019

Category: AC

Class: 1

Function: Provide a pressure isolation safety function preventing over-pressurization of the Residual Heat Removal Loop A low pressure piping from either 1) reactor vessel pressure or 2) RCIC operation when controlling RPV level and pressure.

Test Requirement: ISTC-3510, "Exercise Test Frequency"; Active Category A, Category B, and Category C check valves shall be tested nominally every 3 months.

Basis of Justification: This simple check valve is within the normal flowpath for RHR spray to the reactor vessel head. The valve has no external means for exercising and must rely on system operation (i.e., cessation or reversal of flow) to ensure that the valve seats/closes.

During plant operation this normally closed check valve performs a pressure isolation safety function. Its safety function prevents over-pressurization of the Residual Heat Removal Loop A low pressure piping from either 1) reactor vessel pressure or 2) RCIC operation when controlling RPV level and pressure. Therefore, system/component design makes compliance with the quarterly exercise closed requirement, by observing that the obturator travels to the seat on cessation or reversal of flow, impractical.

Each plant shutdown to cold conditions could require RHR head spray to be periodically initiated providing for a full-stroke exercise open. The closure of the check valve on cessation of flow is unverifiable. The RHR head spray line is design such that no system operation or instrumentation exists that would provide positive means for closure verification.

Check valve's with a safety function to provide pressure isolation are designated Category AC. Category AC valves shall be leakage tested in

accordance with ISTC-3630, Leakage Rate for Other Than Containment Isolation Valves. The seat leakage testing is to verify the valve's seat leak-tight integrity. Per ISTC-3630(a) The tests are conducted at a frequency of at least once every 2 years, which would agree with refueling outages. Therefore since this check valve's closure is unverifiable, observation by an other indicator such as the seat leakage testing is an acceptable test.

This refueling outage justification had been previously found to be acceptable in a NRC Safety Evaluation dated August 9, 1999 (TAC No. MA3328) (Log No. PY-NRR/CEI-0989L) and FENOC response to an RAI dated February 26, 2001 (PY-CEI/NRR-2549L).

Alternate Testing: Perform valve closure exercise during refueling outage when is capable of being tested for seat leakage.

Refueling Outage Justification

RO-13

System: Primary Containment Isolation Check Valves

Valves: 1B21-F032A, 1B21-F032B, 1C11-F122, 1G41-F522, 1N27-F559A, 1N27-F559B, 1P43-F721, 1P50-F539

Category: AC

Class: 1, 2

Function: System check valves for systems penetrating primary containment.

Test Requirement: ISTC-3510, "Exercise Test Frequency"; Active Category A, Category B, and Category C check valves shall be tested nominally every 3 months.

Basis for Justification: These check valves are the inboard and outboard primary containment isolation valves for systems that are inservice during plant operation. These normally open check valves are required to be exercised to both the open and closed position. The closed position exercise is verified by leakage testing while the open exercise is accomplished when the systems are placed back into service, generally following a refueling outage. The only exception to this is 1C11-F122, which can only be exercised open by inserting a reactor scram. Attaining the desired system flow ensures that the valves have been exercised open while attaining a satisfactory leakage rate verifies the valves exercised closed. Therefore, quarterly or cold shutdown testing is impractical due to prolonged periods of component inoperability and increased exposure to radiation. These valves are listed below with a description of the system needs during operation or cold shutdown.

This refueling outage justification had been previously found to be acceptable in a NRC Safety Evaluation dated August 9, 1999 (TAC No. MA3328) (Log No. PY-NRR/CEI-0989L) and FENOC response to an RAI dated February 26, 2001 (PY-CEI/NRR-2549L).

Alternate Testing: Perform valve 1C11-F122 exercising in the open and closed directions during refueling outages. Valves 1B21-F032A, 1B21-F032B, 1G41-F522, 1N27-F559A, 1N27-F559B, 1P43-F721, and 1P50-F539 will be exercised closed during refueling outages as well as verified open quarterly.

As an alternative to reverse exercising during each refueling outage, valves 1C11-F122, 1G41-F522, 1P43-F721, and 1P50-F539 may be placed in the Check Valve Condition Monitoring Program and reverse exercised in conjunction with seat leakage testing at the Option B frequency.

With the exception of 1C11-F122, these valves are open during normal plant operation and normally remain open during cold shutdown, therefore, imposing restrictions to exercise to the open and closed position to allow use of nonintrusive test techniques is not practical.

Valve No's.	System Description
1B21-F032A, B 1N27-F559A, B	These valves are the feedwater inboard and outboard containment isolation valves. The Feedwater System is the normal method of level control for the reactor vessel. Testing of these valves can only be performed during prolonged shutdowns when other sources of level control are available and area radiation levels are reduced. Therefore, quarterly or cold shutdown testing is impractical due to prolonged system shutdowns and unnecessary exposure to radiation.
1C11-F122	This valve is the inboard containment isolation valve for the Control Rod Drive System. The CRD System is required for normal rod motion and cooling of the control rod drive mechanisms. Thus, testing of this valve can only be performed during prolonged shutdowns when a reactor scram can be inserted and rod movement and cooling is not required. Therefore, quarterly or cold shutdown testing is impractical due to prolonged shutdowns, isolation of cooling water to the CRD's and unnecessary exposure to radiation.
1G41-F522	This valve is the inboard containment isolation valve for the Fuel Pool Cooling and Clean-up System. The FPCC System is required to remove heat and maintain the purity, clarity, and level of water in the upper containment pools. Thus, testing of this valve can only be performed during prolonged shutdowns. Therefore, quarterly or cold shutdown testing is impractical due to prolonged shutdowns and unnecessary exposure to radiation.

Valve No's.	System Description
1P43-F721	This valve is the inboard containment isolation valve for the Nuclear Closed Cooling System. The NCC System is required to supply cooling water to numerous plant components which include: control complex chillers, fuel pool cooling and cleanup heat exchangers, air system compressors, reactor water cleanup pumps, CRD hydraulic pumps, drywell coolers, reactor recirculation pumps, and containment chillers. Thus, testing of this valve can only be performed during prolonged shutdowns. Therefore, quarterly or cold shutdown testing is impractical due to prolonged shutdowns and unnecessary exposure to radiation.
1P50-F539	This valve is the inboard containment isolation valve for the Containment Vessel Chilled Water System. The CVCW System is required to maintain the containment environment acceptable for equipment qualification and personnel occupancy. Thus, testing of this valve can only be performed during prolonged shutdowns. Therefore, quarterly or cold shutdown testing is impractical due to prolonged shutdowns and unnecessary exposure to radiation.

Refueling Outage Justification

RO-14

Systems: Residual Heat Removal (RHR)

Valves: 1E12-F550

Category: AC

Class: 1

Function: Provides Pressure Isolation for the Reactor Coolant Pressure Boundary System and provides thermal relief for the shutdown cooling suction penetration.

Test Requirements: ISTC-3510, "Exercise Test Frequency"; Active Category A, Category B, and Category C check valves shall be tested nominally every 3 months.

Basis for Justification: During cold shutdowns, technical specifications require that two modes of shutdown cooling and two ECCS systems be maintained operable unless the plant is in the refueling mode with the reactor vessel head removed and the cavity flooded. Open and closed exercising of this valve, which is located in the shutdown cooling supply line, is accomplished by performing leak rate testing. To perform this testing in any mode other than refueling, renders one or more ECCS and shutdown cooling modes inoperable, in violation of Technical Specifications. Testing of this valve during the actual refueling outage ensures that adequate alternate means of decay heat removal exists and enhances system availability.

Therefore, performing the open and close exercising of the 1E12-F550 simple check valve quarterly or during cold shutdown is impractical due to prolonged system inoperability and an increased exposure to radiation.

This refueling outage justification had been previously found to be acceptable in a NRC Safety Evaluation dated August 9, 1999 (TAC No. MA3328) (Log No. PY-NRR/CEI-0989L).

Alternate Testing: Perform valve open and closed exercising during refueling outages when plant conditions permit testing without violating Technical Specifications.

Refueling Outage Justification

RO-15

System: Emergency Closed Cooling System (P42)

Valves: P42-F260A, P42-F260B, P42-F265A, P42-F265B

Category: B

Class: 3

Function: These valves provide an alternate emergency cooling water supply to the fuel pool cooling and cleanup (FPCC) System Heat Exchangers upon loss of nuclear closed cooling (NCC) water due to a loss of coolant accident (LOCA) or system inoperability.

Test Requirement: ISTC-3510, "Exercise Test Frequency"; Active Category A, Category B, and Category C check valves shall be tested nominally every 3 months.

Basis for Justification: The design of the FPCC system allows two methods of supplying cooling water to the FPCC Heat Exchangers. The supply methods include: 1) normal closed cooling water supply using Unit 1, Nuclear Closed Cooling System, 1P43; 2) alternate emergency cooling water supply using Unit 1, Emergency Service Water (ESW) System, 1P45. Therefore, the alternate emergency cooling water supply (1P45) must be available within 24 hours upon loss of the normal closed cooling water supply (1P43).

The emergency service water spectacle flanges were removed due to the safety concern raised over the 24 hour duration required for flange rotation, thus making these P42 valves the new interface between the closed loop cooling and the open loop cooling system. This alternate emergency cooling water supply (1P45) should be used only as a last resort since this would adversely affect the water chemistry of the NCC system (1P43) and eliminates the closed loop barrier establishing a potential direct leakage path for radioactive water into an open loop system (1P45).

Thus, these valves are to be exercised on a refueling outage frequency when the FPCC Hx can be removed from service to allow valve cycling and minimal intrusion of ESW water into the NCC system. Upon completion of the exercise the FPCC Hx and portions of the NCC System require numerous flushes to remove the lake water. Therefore, quarterly or cold shutdown testing is impractical due to the increased likelihood of lake water intrusion and prolonged periods of system inoperability.

This refueling outage justification had been previously found to be acceptable in a NRC Safety Evaluation dated August 9, 1999 (TAC No. MA3328) (Log No. PY-NRR/CEI-0989L).

Alternate Testing: Exercise valves during refueling outage to minimize the intrusion of lake water into the NCC system and when sufficient time exists to perform flushing.

Refueling Outage Justification

RO-16

System: Standby Liquid Control (C41)

Valves: 1C41-F033A and 1C41-F033B

Category: AC

Class: 2

Function: Standby Liquid Control Pump Discharge Check Valves

Test Requirement: ISTC-3510, "Exercise Test Frequency"; Active Category A, Category B, and Category C check valves shall be tested nominally every 3 months.

Basis for Justification: These check valves are exercised to the open position (verified open) on a quarterly basis when the SBLC pumps are operated. However, ensuring the closure capability of these valves requires isolation of a train of the Standby Liquid Control System, draining of a portion of the system and removal of a relief valve to measure seat leakage. Therefore, quarterly or cold shutdown testing is impractical due to the prolonged period of system inoperability.

This refueling outage justification had been previously found to be acceptable in a NRC Safety Evaluation dated August 9, 1999 (TAC No. MA3328) (Log No. PY-NRR/CEI-0989L).

Alternate Testing: Perform valve exercising to the closed position when performing the seat leakage test during refueling outages.

Refueling Outage Justification

RO-17

System: Penetration Pressurization (P53)

Valves: 1P53-F601A, 1P53-F601B, 1P53-F602A, 1P53-F602B, 1P53-F633A, 1P53-F633B

Category: A, AC

Class: 2

Function: The check valves supply air to the drywell airlock air accumulator system for the drywell air lock door seals. The drywell air lock door equalizing ball valves allow for air lock pressure equalization during operation.

Test Requirement: ISTC-3510, "Exercise Test Frequency"; Active Category A, Category B, and Category C check valves shall be tested nominally every 3 months.

Basis for Justification: These check valves are only opened to charge the seal accumulators following seal pressurization, verification of adequate seal pressure ensures that the valves exercised open. Leak testing of the seal accumulator system is only required by Technical Specifications every 24 months, which verifies that the valves exercised closed. Entry through the drywell airlock, to exercising the check valves open, may not occur during every cold shutdown. When tested at a refueling outage frequency, failure of the check valves to open after using the airlock door would be identified by a limit switch indication that one or both doors are open (i.e., the unsafe condition).

The ball valves are only utilized to equalize pressure across the airlock when making a drywell entry, which for the most part is only done during a refueling outage prior to the equipment hatch being removed. Failure of the ball valves to exercise to the open position would be detected by the inability to equalize pressure across the airlock door during cycling. Drywell airlock leakage testing, which is only required every 24 months, verifies that these ball valves were exercised to the closed position.

RO-17 (Continued)

After having been opened the drywell air lock door would require testing prior to plant startup. This testing would require that the drywell airlock blast shields be unlocked, pulled back for access to the airlock, sufficient time for Health Physics to establish a boundary, and Site Safety must be present for opening an unknown atmosphere. This testing also requires significant test duration for valve lineups, equipment installation, stabilization time and equipment removal. It would be impractical on a quarterly or cold shutdown frequency to force the plant to enter the drywell just to open the drywell airlock check valves and ball valves that are being maintained in their accident positions. Also an existing technical specification requires testing at a specified frequency.

This refueling outage justification had been previously found to be acceptable in a NRC Safety Evaluation dated August 9, 1999 (TAC No. MA3328) (Log No. PY-NRR/CEI-0989L) and FENOC response to an RAI dated February 26, 2001 (PY-CEI/NRR-2549L).

Alternate Testing: Perform valve exercising (open, closed) during refueling outages when the drywell airlock doors are most likely to be used. Additionally, this frequency is consistent with that required by Technical Specifications.

Refueling Outage Justification

RO-18

System: Safety Relief Valves (SRV) and Reactor Head Vent

Valves: 1B21-F037A, B, C, D, E, F, G, H, J, K, L, M, N, P, R, S, T, U, V
1B21-F078A, B, C, D, E, F, G, H, J, K, L, M, N, P, R, S, T, U, V
1B21-F040

Category: C

Class: 2, 3

Function: Vacuum breakers ensure that the steam exhausted into the discharge lines equalizes to the environment's pressure.

Test Requirement: ISTC-3510, "Exercise Test Frequency"; Active Category A, Category B, and Category C check valves shall be tested nominally every 3 months.

Basis for Justification: The SRV and reactor head vent discharge vacuum breakers provide a means for releasing a vacuum developed in the discharge lines from condensing steam. The vacuum breakers are normally closed during plant operation. Exercising of these valves to the open position can be verified manually, however, this would require entry into the drywell which is not permitted during operation and not normally required during cold shutdowns. Also, there is no method to prevent actuation or steam seat leakage into the discharge lines, placing personnel at risk if exercising was performed. Therefore, quarterly or cold shutdown testing would be impractical due to personnel safety and increased exposure to radiation.

Verifying that these valves exercised to the closed position will be performed during the manual exercise by witnessing the valves return to the closed position.

This refueling outage justification had been previously found to be acceptable in a NRC Safety Evaluation dated August 9, 1999 (TAC No. MA3328) (Log No. PY-NRR/CEI-0989L.

Alternate Testing: Perform valve exercising (open, closed) during refueling outages when potential for steam pressure does not exist for personal safety concerns and when drywell entry can be made without exposing personal to excessive levels of radiation.

Refueling Outage Justification

RO-19

Systems: Nuclear Boiler (B21) and Safety Related Instrument Air (P57)

Valves: 1B21-F024A, B, C, D
1B21-F029A, B, C, D
1P57-F572B
1P57-F574B

Category: AC

Class: 3

Function: Prevent depressurization of air accumulators on a Loss of Instrument Air and supply air for the exercising of the Main Steam Isolation Valves (MSIV). The Safety Related Instrument Air valves supply air to the outboard MSIV's from the Instrument Air system and isolate the Instrument Air system from the Safety Related Instrument Air system if the Instrument Air system is lost.

Test Requirements: ISTC-3510, "Exercise Test Frequency"; Active Category A, Category B, and Category C check valves shall be tested nominally every 3 months.

Basis for Justification: To adequately exercise these check valves in the open and closed directions requires instrumentation hook ups and valve manipulations that would make the associated MSIV's inoperative. Performance of these tests require entry into the drywell (1B21-F024A/B/C/D) and the steam tunnel, which would expose personnel to high neutron radiation in the drywell and high gamma radiation in the steam tunnel (1B21-F029A/B/C/D, 1P57-F572B, and 1P57-F574B). Therefore, quarterly or cold shutdown testing is impractical due to the increased radiation exposure, and safety concerns created.

This refueling outage justification had been previously found to be acceptable in a NRC Safety Evaluation dated August 9, 1999 (TAC No. MA3328) (Log No. PY-NRR/CEI-0989L) and FENOC response to an RAI dated February 26, 2001 (PY-CEI/NRR-2549L).

Alternate Testing: Perform valve exercising (open, closed) during refueling outages when entry into the drywell and steam tunnel is possible without exposing personal to excessive levels of radiation.

Refueling Outage Justification

RO-20

System: Nuclear Boiler (B21)

Valves: 1B21-R011A-F, 1B21-R011A-G, 1B21-R011B-F, 1B21-R011B-G, 1B21-R011C-F, 1B21-R011C-G, 1B21-R011D-F, 1B21-R011D-G

Category: AC

Class: 2

Function: These check valves provide the flowpath for CRD water to the RPV level sensing line reference leg, preventing the buildup of non-condensable gases.

Test Requirement: ISTC-3510, "Exercise Test Frequency"; Active Category A, Category B, and Category C check valves shall be tested nominally every 3 months.

Basis for Justification: These valves are the safety interface between the RPV level reference leg and the non-safety portion of the CRD system. The instrument reference leg purge system provides a continuous water flow of approximately 0.002 gpm up to 0.020 gpm to prevent creation of a non-conservative instrument error. The instrument error is attributed to gases coming out of solution during a rapid depressurization event. These check valves are located in the containment building and require instrumentation/equipment to be connected to confirm the open and closed exercising. The safety significance of this system and the additional radiation exposure that would be incurred during testing precludes the justification for testing during normal plant operation. Therefore, quarterly or cold shutdown testing is impractical due to inoperability of a safety significant system and unnecessary exposure to radiation.

This refueling outage justification had been previously found to be acceptable in a NRC Safety Evaluation dated August 9, 1999 (TAC No. MA3328) (Log No. PY-NRR/CEI-0989L) and FENOC response to an RAI dated February 26, 2001 (PY-CEI/NRR-2549L).

Alternate Testing: Perform valve exercising (open, closed) during refueling outages when the interruption of CRD water to the RPV level reference leg is possible. Additionally, performing these tests during refueling outages minimizes test personal to radiation exposure.

Refueling Outage Justification

RO-21

System: Feedwater Leakage Control (N27)

Valves: 1N27-F739A, 1N27-F739B, 1N27-F742A, 1N27-F742B

Category: AC

Class: 2

Function: These valves allow a flowpath to the feedwater system during feedwater leakage control operations and provide a pressure isolation from the feedwater system during normal power operations.

Test Requirements: ISTC-3510, "Exercise Test Frequency"; Active Category A, Category B, and Category C check valves shall be tested nominally every 3 months.

Basis for Justification: To perform the open exercising of these valves would require opening upstream valves 1N27-F737 and 1N27-F740. These valves are interlocked (feedwater header pressure must be <35 psig) to prevent full stroke exercising during normal operation. Performance of both the open and closed exercise requires valve manipulations and equipment to be installed which would prolong system down time. In addition, these valves are located in the steam tunnel and testing during operation or cold shutdown would result in increased radiation exposure. Therefore, quarterly or cold shutdown testing is impractical due to prolonged system down time and increased radiation exposure.

This refueling outage justification had been previously found to be acceptable in a NRC Safety Evaluation dated August 9, 1999 (TAC No. MA3328) (Log No. PY-NRR/CEI-0989L).

Alternate Testing: Perform valve exercising (open, closed) during refueling outages when feedwater pressure is at an acceptable level and to minimize radiation exposure to test personnel.

Refueling Outage Justification

RO-22

System: Parallel Instrument Air (P52)

Valves: 1P52-F550

Category: AC

Class: 2

Function: Supplies instrument air to various components throughout the containment and drywell.

Test Requirement: ISTC-3510, "Exercise Test Frequency"; Active Category A, Category B, and Category C check valves shall be tested nominally every 3 months.

Basis for Justification: Performing the open and close exercising of this valve could lead to a loss of instrument air to the containment and drywell. Components that could be affected by this loss of air are the inboard MSIV accumulators, non ADS SRV accumulators, RWCU Filter/Demineralizers, CRD HCU's, Scram Discharge Volume valves, Reactor Protection Air and miscellaneous control valves (B33, G33, G36, G50, G61, M11, M14, M16, P43 and P50). Isolation of the containment would not allow the instrument air header to be monitored in the control room since there is no instrumentation or alarm functions on that portion of the instrument air system. As a result normal instrument air leakage/usage could lead to anomalous component position changes (ventilation dampers closing, scram outlet valves could start to open causing their associated control rods to drift in, and MSIV's' could close on a decreasing pressure). Also several other systems such as containment vessel cooling (M11), containment and drywell purge (M14) could be lost creating habitability concerns in the containment. Therefore, quarterly or cold shutdown testing is impractical due to potential unnecessary challenges to plant systems.

This refueling outage justification had been previously found to be acceptable in a NRC Safety Evaluation dated August 9, 1999 (TAC No. MA3328) (Log No. PY-NRR/CEI-0989L) and FENOC response to an RAI dated February 26, 2001 (PY-CEI/NRR-2549L).

RO-22 (Continued)

Alternate Testing: Perform valve exercising (open, closed) during refueling outages when plant conditions permit the isolation of instrument air to the containment and drywell.

As an alternative to reverse exercising during each refueling outage, this valve may be placed in the Check Valve Condition Monitoring Program and reverse exercised in conjunction with seat leakage testing at the Option B frequency.

Refueling Outage Justification

RO-23

System: Safety Related Instrument Air (P57)

Valves: 1P57-F524A and 1P57-F524B

Category: AC

Class: 2

Function: These check valves are located in the supply piping from the Safety Related Instrument Air receivers to the eight ADS SRV accumulators and one non-ADS accumulator. They also serve as containment isolation valves.

Test Requirement: ISTC-3510, "Exercise Test Frequency"; Active Category A, Category B, and Category C check valves shall be tested nominally every 3 months.

Basis for Justification: To adequately exercise these check valves in the open and closed directions requires equipment installation and valve manipulations inside the containment that could possibly make the associated SRV's inoperative. Therefore, testing to verify open and closed capability quarterly and during cold shutdown is impractical due to the increased radiation exposure and due to the necessity for isolation of the ADS SRV accumulator air supply. Isolation of the containment and drywell would not allow the safety related instrument air system header pressure to monitored in the control room since there is no instrumentation or alarms associated with that portion of the safety related instrument air system. If pressure were to decrease below 150 psig without being monitored the Safety Relief Valves (SRV's) would be inoperable without control room knowledge. Therefore, quarterly or cold shutdown testing is impractical due to potential unnecessary challenges to a safety system.

This refueling outage justification had been previously found to be acceptable in a NRC Safety Evaluation dated August 9, 1999 (TAC No. MA3328) (Log No. PY-NRR/CEI-0989L) and FENOC response to an RAI dated February 26, 2001 (PY-CEI/NRR-2549L).

RO-23 (Continued)

Alternate Testing: As an alternative to reverse exercising during each refueling outage, these valves may be placed in the Check Valve Condition Monitoring Program and reverse exercised in conjunction with seat leakage testing at the Option B frequency.

or

Perform valve exercising (open, closed) during refueling outages when unnecessary challenges to a safety system is not a concern and when test personnel are not exposed to excessive levels of radiation.

Refueling Outage Justification

RO-24

System: High Pressure Core Spray

Valves: 1E22-F621, 1E22-F622

Category: C

Class: 2

Function: Relieve vacuum in the HPCS discharge line to the suppression pool.

Test Requirements: ISTC-3510, "Exercise Test Frequency"; Active Category A, Category B, and Category C check valves shall be tested nominally every 3 months.

Basis for Justification: 1E22-F621 and 1E22-F622 allow the HPCS full flow test line, leading to the suppression pool, to drain in a timely manner after the HPCS pump is secured. This in turn minimizes the potential for a damaging water hammer to occur if the HPCS system were called upon to restart. Verification that these internal spring check valves are closed is accomplished quarterly during HPCS pump operation by verifying no leakage past the seating surface. Testing to verify the full open capability of these vacuum breakers would require a clearance to be hung, removal of the vacuum breaker, testing of the vacuum breaker, reinstallation of the vacuum breaker, and the clearance to be removed. These actions combined would result in extended out of service time for the High Pressure Core Spray System. Therefore, quarterly or cold shutdown testing is impractical due to the increased inoperability of the HPCS system.

This refueling outage justification had been previously found to be acceptable in a NRC Safety Evaluation dated August 9, 1999 (TAC No. MA3328) (Log No. PY-NRR/CEI-0989L).

Alternate Testing: Perform valve exercising in the open direction during refueling outages when plant conditions permit the HPCS system to be removed from service and sufficient time exists for removal, testing and reinstallation of the vacuum breakers.

Refueling Outage Justification

RO-25

System: Reactor Core Isolation Cooling (E51)

Valves: 1E51-F065, 1E51-F066

Category: AC

Class: 1

Function: These check valves are part of the normal flowpath for RHR spray to the reactor vessel head and RCIC operation when controlling RPV level and pressure.

Test Requirement: ISTC-3510, "Exercise Test Frequency"; Active Category A, Category B, and Category C check valves shall be tested nominally every 3 months.

Basis of Justification: These simple check valves are within the normal flowpath for both 1) RHR spray to the reactor vessel head and 2) RCIC operation when controlling RPV level and pressure. Both check valves have their own unique external exercising device.

During plant operation, these normally closed check valves perform the reactor coolant system (RCS) pressure isolation safety function, with 1E51-F066 additionally serving a primary containment isolation (PCI) safety function. Their RCS safety function closed is to prevent over-pressurization of either the RHR Loop A and/or RCIC System low pressure piping. The failure consequences for valve closure could be a loss of coolant accident (LOCA) outside of containment, which is an unanalyzed accident.

Limitations exist for the external exerciser's use. Both exercisers will not properly function unless minimum resistance to obturator movement (i.e., low differential pressure) exists. Additionally, the exercisers provide positive means to verify opening, but the ability to determine valve closure does not exist. Therefore, system/component design makes compliance with the quarterly exercise closed requirement, by observing that the obturator travels to the seat on cessation or reversal of flow, impractical.

During plant operation these normally closed check valves perform a pressure isolation safety function. Its safety function prevents over-pressurization of the Residual Heat Removal Loop A low pressure piping from either 1) reactor vessel pressure or 2) RCIC operation when controlling RPV level and pressure.

Therefore, system/component design makes compliance with the quarterly exercise closed requirement impractical.

Each plant shutdown to cold conditions could require RHR head spray to be periodically initiated. Spraying the reactor vessel dome condenses steam accumulated in the upper portion of the reactor vessel. Initiation of head spray flow demonstrates full-stroke exercise open capability of the check valve. The closure of the check valve on cessation of flow is currently unverifiable. The RHR head spray line is designed such that no system operation or instrument exists that would provide positive means for closure verification.

Check Valve's with a safety function to provide RCS pressure isolation are designated Category AC. Category AC valves shall be leakage tested in accordance with ISTC-3630, Leakage Rate for Other Than Containment Isolation Valves. The seat leakage testing is to verify the valve's seat leak-tight integrity. Per ISTC-3630(a) the tests are conducted at a frequency of at least once every 2 years, which coincide with refueling outages. Therefore since these check valves are unable to be verified closed by other means, observation by an indicator such as the seat leakage testing is an acceptable test.

This refueling outage justification had been previously found to be acceptable in a NRC Safety Evaluation dated August 9, 1999 (TAC No. MA3328) (Log No. PY-NRR/CEI-0989L) and FENOC response to an RAI dated February 26, 2001 (PY-CEI/NRR-2549L).

Alternate Testing: Perform valve closed exercise during a refueling outage when RHR Loop A Head Spray Line is capable of being seat leakage rate tested.

Refueling Outage Justification

RO-26

System: Primary Containment Isolation Check Valves

Valves: 1P11-F545, 1P22-F577, 1P51-F530, 1P86-F528

Category: AC

Class: 2

Function: System check valves for systems penetrating primary containment.

Test Requirement: ISTC-3510, "Exercise Test Frequency"; Active Category A, Category B, and Category C check valves shall be tested nominally every 3 months.

Basis for Justification: These check valves are the inboard containment isolation valves for systems of limited use during plant operation. These normally closed check valves are required to be exercised in both the open and closed direction. The closed position exercise is verified by leakage testing while the open exercise is accomplished during refueling outages when these systems are utilized more extensively. Attaining a desired system flow ensures the valves have exercised to the open position while attaining a satisfactory leakage rate verifies the valves exercised to the closed position. To adequately exercise these check valves to the closed position requires equipment installation and valve manipulations inside the containment which would result in prolonged periods of exposure to radiation. Therefore, quarterly or cold shutdown testing is impractical due to prolonged periods of exposure to radiation with little to no benefit.

This refueling outage justification had been previously found to be acceptable in a NRC Safety Evaluation dated August 9, 1999 (TAC No. MA3328) (Log No. PY-NRR/CEI-0989L).

Alternate Testing: As an alternative to reverse exercising during each refueling outage, these valves may be placed in the Check Valve Condition Monitoring Program and reverse exercised in conjunction with seat leakage testing at the Option B frequency.

Perform valve exercising to the open and closed position during refueling outages when plant conditions allow flow through the valves and sufficient time exists to perform seat leakage testing.

Refueling Outage Justification

RO-27

System: Safety Related Instrument Air

Valves: 1P57-F555A, 1P57-F555B, 1P57-F556A, 1P57-F556B

Category: AC

Class: 3

Function: System check valves that isolate the Non-Safety portion of the Safety Related Instrument Air System from the Safety Class portion.

Test Requirement: ISTC-3510, "Exercise Test Frequency"; Active Category A, Category B, and Category C check valves shall be tested nominally every 3 months.

Basis for Justification: These check valves provide the boundary between the non safety and safety portions of the Safety Related Air System. These valves are normally closed but do periodically partially open to provide makeup air to the safety related accumulators. To exercise these valves to the open position would require depressurizing the safety related instrument air system in order to develop the dp required to open the valves. To verify that these valves have exercised to the closed position would require isolating the makeup system and installing test equipment so a leakage rate test can be performed. Since this system supplies the air to the ADS SRV's, depressurizing the system to allow for testing would render the ADS SRV's inoperable.

Therefore, quarterly or cold shutdown testing is impractical due to making the ADS SRV's inoperable.

This refueling outage justification had been previously found to be acceptable in a NRC Safety Evaluation dated August 9, 1999 (TAC No. MA3328) (Log No. PY-NRR/CEI-0989L).

Alternate Testing: Perform valve exercising (open, closed) during refueling outages. Open exercising will be verified when the Safety Related air accumulators are filled following maintenance activities during a refueling outage. Verification that the valves have exercised to the closed position will be performed by leakage rate testing prior to plant startup.

Refueling Outage Justification

RO-28

System: Containment Vessel and Drywell Purge

Valves: 1M14-F045, 1M14-F055A, 1M14-F055B, 1M14-F060A, 1M14-F060B, 1M14-F065, 1M14-F070, 1M14-F085

Category: A and B

Class: 2

Function: To provide Containment and Drywell isolation for the Containment and Drywell Purge System.

Test Requirement: ISTC-3510, "Exercise Test Frequency"; Active Category A, Category B, and Category C check valves shall be tested nominally every 3 months.

Basis for Justification: These large (24", 36" and 42") air operated butterfly valves are considered inoperable during plant operations and are administratively sealed with a keylock switch.

Valves 1M14-F055A, 1M14-F055B, 1M14-F060A, and 1M14-F060B (24") are provided in the Drywell purge lines, which supply air from the containment to the drywell, primarily during refueling outages. In addition to being administratively sealed, (Technical Specifications does not permit these valves to be opened during Modes 1, 2 and 3) the piping between these valves is flooded during normal operation to serve as a radiation shield against streaming. Stroking of these valves on a quarterly or cold shutdown frequency would require draining the piping, performing valve manipulations and restoring the piping to a water filled status, all of which would be done inside the containment in a radiation environment. Therefore, quarterly or cold shutdown testing is impractical due to technical specification violations and increased exposure to radiation if the system were drained.

Valves 1M14-F045, 1M14-F065, 1M14-F070 and 1M14-F085 (36" and 42") are provided in the purge supply line to containment and purge exhaust line from the drywell. Technical Specifications does not permit these valves to be operated during Modes 1, 2 and 3 so these valves are administratively sealed closed during plant operations. In addition, the Technical Specifications state that leakage rate testing is required every time the 42" containment isolation

valves are opened. This additional leakage rate testing that could occur involves valves to be manipulated in the annulus structure, test equipment to be installed, and many hours of leak testing to allow for this large test volume to stabilize prior to recording leak rate data. Therefore, quarterly or cold shutdown is impractical due to technical specification violations, increased exposure to radiation if the system were drained and prolonged test setup times.

Also, in accordance with ISTC-3570, "valves in a system declared inoperable or not required to be operable, the exercising test schedule need not be followed".

This refueling outage justification had been previously found to be acceptable in a NRC Safety Evaluation dated August 9, 1999 (TAC No. MA3328) (Log No. PY-NRR/CEI-0989L).

Alternate Testing: Perform valve exercising and stroke time testing during refueling outages when Technical Specifications allow the valves to be exercised.

Refueling Outage Justification

RO-29

System: Fuel Pool Cooling

Valves: 1G41-F597A, 1G41-F597B

Category: C

Class: 3

Function: Provide isolation between the Surge Tanks and the Fuel Transfer Tube Drain System.

Test Requirement: ISTC-3510, "Exercise Test Frequency"; Active Category A, Category B, and Category C check valves shall be tested nominally every 3 months.

Basis for Justification: These check valves are in the discharge flow path of the Fuel Transfer Tube Drain Pumps which transfer water from the drain tank to the surge tanks. This system is only used during refueling operations and is considered inoperable during all other plant modes. Testing of this system to prove operability, including check valves 1G41-F597A and 1G41-F597B for their exercise open and close capabilities, is performed each refuel prior to fuel movement.

In accordance with ISTC-3570, "valves in a system declared inoperable or not required to be operable, the exercising test schedule need not be followed".

This refueling outage justification had been previously found to be acceptable in a NRC Safety Evaluation dated August 9, 1999 (TAC No. MA3328) (Log No. PY-NRR/CEI-0989L).

Alternate Testing: Perform valve exercising to the open and closed position prior to fuel movement.

Refueling Outage Justification

RO-30

System: Penetration Pressurization (P53)

Valves: 1P53-F572A, 1P53-F572B, 1P53-F573A, 1P53-F573B, 1P53-F574, 1P53-F587A, 1P53-F587B, 1P53-F588A, 1P57-F588B

Category: AC

Class: 2

Function: These check valves supply air to the upper and lower containment airlocks air accumulator systems for the air lock door seals.

Test Requirement: ISTC-3510, "Exercise Test Frequency"; Active Category A, Category B, and Category C check valves shall be tested nominally every 3 months.

Basis for Justification: These check valves are opened routinely to charge the seal accumulators following seal pressurization, which occurs each time the doors are opened and closed. Verification of adequate seal pressure ensures that the valves exercised open. However, verifying that these check valves have exercised to the closed position can only be accomplished by performing a leak test. Leak testing of the seal accumulator system is only required by Technical Specifications every 24 months, which verifies that the valves have exercised to the closed position.

Verifying that these valves have exercised to the closed position requires significant test duration for valve lineups, equipment installation, stabilization time and equipment removal. In addition, each time this testing is performed the affected air lock can not be used for egress or ingress for a minimum of 10 hours. Therefore, quarterly or cold shutdown testing is impractical due to an existing technical specification requiring testing at a specified frequency.

This refueling outage justification had been previously found to be acceptable in a NRC Safety Evaluation dated August 9, 1999 (TAC No. MA3328) (Log No. PY-NRR/CEI-0989L).

RO-30 (Continued)

Alternate Testing: Seat leakage testing of valves will be by conducting a seal pneumatic system leak test per technical specifications which also will perform the closed position verification. Additionally, valves 1P53-F572B, F573B and F574 are in a series configuration; however, only one valve is needed to close in this series configuration. Therefore, they will be tested as a unit per ISTC-5223. (Ref. CR 99-2553)

Refueling Outage Justification

RO-31

System: Control Rod Drive Hydraulic System (C11)

Valves: 1C11-115 (Typical of 177)

Category: C

Class: 2

Function: Accumulator Supply Check.

Test Requirements: ISTC-3510, "Exercise Test Frequency"; Active Category A, Category B, and Category C check valves shall be tested nominally every 3 months.

Basis for Relief: Check valve 1C11-115 Exercise Close is satisfied by performance of surveillance procedure SVI-C11-T2001 at least once every 2 years. 1C11-115, Accumulator supply check valve testing is performed by securing the operating Control Rod Drive pump, and verifying a no accumulator fault condition exists, or that there is only a minimal pressure drop observed. This testing is also supplemented by operational rounds every 7 days, where, HCU pressures are verified to be ≥ 1520 psig per Technical Specification surveillance requirement. The surveillance testing must be performed in operational Modes 4 or 5 due to the necessity to secure the Control Rod Drive pump. Securing the Control Rod Drive pumps would result in loss of charging water pressure, loss of Control Rod Drive Mechanism cooling water, loss of Reactor Pressure Vessel level instrument purge flow, and the loss of cooling water to the reactor recirculation pump seals. Performing this surveillance during power operation would be impractical due to the potential for equipment damage or reactor scram.

Alternate Testing: Accumulator supply check valve testing shall be performed at least once every 2 years during a refueling outage when the Control Rod Drive pumps can be secured.

Refueling Outage Justification

RO-32

Systems: ECCS Waterleg Pump Check Valves (RHR, LPCS, HPCS, AND RCIC)

Valves: 1E12-F084A, 1E12-F084B, 1E12-F084C, 1E12-F085A, 1E12-F085B, 1E12-F085C, 1E21-F033, 1E21-F034, 1E22-F006, 1E22-F007, 1E51-F061, 1E51-F062

Category: C

Class: 2

Function: To provide keep fill water for Emergency Core Cooling System discharge piping preventing possible water hammer.

Test Requirements: ISTC-3510, "Exercise Test Frequency"; Active Category A, Category B, and Category C check valves shall be tested nominally every 3 months.

Basis for Justification: Forward flow exercising of these check valves would require system alignment for a flow path and measurement of an established flow rate. The Waterleg pumps' Comprehensive pump testing accomplishes both items, therefore pump Relief Request PR-1 is applicable to these valves. The waterleg pumps were designed to be inservice to maintain functional systems (discharge/ suction piping) pressurized. The waterleg pump normal discharge path must be redirected to perform safety-related Comprehensive pump testing. This would require racking out of the ECCS main pump breakers (RHR, LPCS, and HPCS) or isolation of the pump (RCIC) to prevent system damage due to waterhammer or cavitation upon receipt of an actuation signal. Also, a fill and vent of each ECCS System would be required after testing, prolonging the time these systems are in a non-standby readiness mode. Therefore, conformance with the exercise requirements is impractical for the facility due to prolonged safety system inoperability. The appropriate time to demonstrate check valve full stroke capability is in conjunction with the biennial Comprehensive pump testing.

RO-32 (Continued)

This justification had been previously found to be acceptable as CS-13 in a NRC Safety Evaluation dated August 9, 1999 (TAC No. MA3328) (Log No. PY-NRR/CEI-0989L) and FENOC response to an RAI dated February 26, 2001 (PY-CEI/NRR-2549L). Since the biennial Comprehensive pump tests will be performed during refueling outages CS-13 was changed to a Refueling Outage test justification.

Alternate Testing: Perform valve exercising (open) during refueling outages, in conjunction with the waterleg keepfill pumps' Comprehensive pump tests.

Refueling Outage Justification

RO-33

Systems: Division 1, 2, 3 Diesel Generator Fuel Oil Transfer Systems, Safety-related Keep Fill Systems, and Reactor Core Isolation Cooling exhaust vacuum breakers.

Valves: 1E12-F084A, 1E12-F084B, 1E12-F084C, 1E51-F061, 1E51-F079, 1E51-F081, 1R45-F577A, 1R45-F577B, 1R45-F578A, 1R45-F578B, 1R45-F579A and 1R45-F579B

Category: C

Class: 2 and 3

Function: 1E12-F084A, 1E12-F084B, 1E12-F084C, and 1E51-F061 are Class 2 simple check valves that are used as in-line check valves for the safety-related keep fill pumps discharge lines, for the Low Pressure Core Spray, Residual Heat Removal and Reactor Core Isolation Cooling systems.

1R45-F577A, 1R45-F577B, 1R45-F578A, 1R45-F578B, 1R45-F579A, and 1R45-F579B are Class 3 simple lift check valves that serve to break the potential siphon between the Fuel Oil Day Tank and the Fuel Oil Storage Tank thereby, preventing the Fuel Oil Day Tank from siphoning back to the Fuel Oil Storage Tank.

1E51-F079 and 1E51-F081 are Class 2 simple lift check valves that serve to break the vacuum on the RCIC exhaust line thereby, ensuring suppression pool water is not drawn into the RCIC system piping due to condensing steam following RCIC shutdown.

Test Requirements: ISTC-3510, "Exercise Test Frequency"; Active Category A, Category B, and Category C check valves shall be tested nominally every 3 months.

Basis for Justification: 1E12-F084A/B/C and 1E51-F061

These simple check valves are the outboard checks of a series pair for the safety-related keep fill pump discharge. They provide the high to low pressure interface to prevent overpressurization of the low pressure portion of the system.

RO-33 (Continued)

Both the associated inboard and involved outboard check valves are in close proximity to each other. The valves being in such close proximity make non-intrusive testing an option that is not preferred due to the difficulty in analyzing the test data (e.g., with acoustics it is difficult to determine which valve closed). Also with the system configuration it is difficult to get reversal/ cessation of flow to close the valve with sufficient force to test. During refueling outages these valves are exercised open by verifying proper keep fill system flow during the Comprehensive pump tests.

The associated inboard stop check valves can be verified closed using the manual handwheel. The system configuration does not include test connections between the involved outboard valves and their associated inboard stop check valves. Therefore, the closure of the outboard check valves cannot be individually verified. The system would have to be redesigned and modified to perform the code required testing. Disassembly and inspection of these valves on a sampling basis to assess their closure capability provides reasonable assurance of the valves operational readiness.

1R45-F577A/B, 1R45-F578A/B, and 1R45-F579A/B

1R45-F577A and F578A, Division 1 Standby Diesel Generator Fuel Oil Transfer pump siphon breakers, 1R45-F577B and F578B, Division 2 Standby Diesel Generator Fuel Oil Transfer pump siphon breakers, and 1R45-F579A and F579B, Division 3 HPCS Diesel Generator Fuel Oil Transfer pump siphon breakers are simple lift check valves. These valves break the potential siphon between the Fuel Oil Day Tank and the Fuel Oil Storage Tank to prevent the Fuel Oil Day Tank from siphoning back to the Fuel Oil Storage Tank. An attempt was made to comply with the ASME Code required Exercise Closed (EC) by using both the Dynasonics and Controlotron non-intrusive ultrasonic flow meters. The Dynasonics was unable to accurately measure flow since it required suspended solids for proper indication of flow, which, clean Number 2 fuel oil does not have. The Controlotrons were unable to accurately measure flow since they need certain physical attributes (e.g., 15 pipe diameters from

flow disturbance) to be met for proper indication of flow, which, could not be met by the piping systems. Also the Controlotrons could not be physically installed in an area of the piping system with laminar flow (upstream side of check) for all the check valves. Acoustical testing was considered but not attempted due to the size of the check valves, the orientation of the check valves and the lack of reverse flow to positively seat the check valve while testing. Disassembly and inspection of these valves on a sampling basis to assess their closure capability provides reasonable assurance of the valves operational readiness.

1E51-F079 and 1E51-F081

1E51-F079 and 1E51-F081 break the vacuum of the RCIC exhaust piping upon RCIC shutdown. These simple check valves were evaluated by engineering and may not be treated as a series pair assembly, as both valves are needed to perform their function. These check valves currently have no intermediate test connections to allow individual valve testing. The intended long term fix for these valves is to install an intermediate test connection to allow for testing individually. However, in the interim period, sample disassembly and inspections will provide sufficient data to assess their closure capabilities and will provide reasonable assurance of the valves operational readiness. Both the associated inboard and involved outboard check valves are in close proximity to each other. The valves being in such close proximity make non-intrusive testing an option that is not preferred due to the difficulty in analyzing the test data (e.g., with acoustics it is difficult to determine which valve closed). Also with the system configuration it is difficult to get reversal/cessation of flow to close the valve with sufficient force to test.

This refueling outage justification had been previously found to be acceptable as relief request VR-4 in a NRC Safety Evaluation dated August 9, 1999 (TAC No. MA3328) (Log No. PY-NRR/CEI-0989L).

RO-33 (Continued)

Alternate Testing: The valves will be disassembled and inspected on a sampling basis pursuant to the requirements ISTC-5221(c). Due to the scope of the activity and system operating restrictions, these valve disassemblies will be performed during reactor refueling outages for the Safety-related Keep Fill System check valves and during on-line divisional diesel outages or reactor refueling outages for the Division 1, 2, 3 valves.

The keep fill check valves are exercised open following their re-assembly by verifying proper keep fill pump flow. The siphon breaker check valves are exercised open following their re-assembly by verifying no reverse rotation of the applicable pump when secured.

As an alternative to the OM Code requirements the valves may be included in the Check Valve Condition Monitoring Program per ISTC-5222 and Appendix II.

Proposed Alternative
in Accordance with 10 CFR 50.55a(a)(3)(i)

--Alternative Provides Acceptable Level of Quality and Safety--

9. ASME Code Component(s) Affected

Category B Valves (Typical of 177)

1C11-126, Scram Inlet Valve (Class 2)

1C11-127, Scram Exhaust Valve (Class 2)

Category C Valves (Typical of 177)

1C11-114, Scram Discharge Header Check Valve (Class 2)
[OPEN direction only]
1C11-115, Charging Water Check Valve (Class 2)
[OPEN direction only]

These valves operate as an integral part of their respective hydraulic control unit to rapidly insert the control rods in support of a scram function.

10. Applicable Code Edition and Addenda

ASME OM Code-2001, with Addenda through OMb-2003

11. Applicable Code Requirements

ISTC-3510, "Exercise Test Frequency," requires active Category B and Category C check valves to be exercised nominally every 3 months. If exercising every 3 months is not possible then exercising may be performed during cold shutdowns or refueling outages as permitted by ISTC-3520.

ISTC-5130, "Pneumatically Operated Valves," requires active valves to have their stroke times measured when exercised in accordance with ISTC-3500.

ISTC-5220, "Check Valves," requires that necessary valve obturator to be demonstrated by performing both an open and close test.

12. Reason for Request

These valves are not provided with position indication; therefore measuring their full stroke time in accordance with the code is impractical.

Exercising these valves at a frequency other than that specified by Technical Specifications could result in a plant trip, which is burdensome without a compensating increase in the level of quality and safety. Additionally, since the power operated valves are not provided with position indication, special test methods or test equipment would be required to determine valve position, which is also burdensome without a compensating increase in the level of quality and safety.

13. Proposed Alternative and Basis for Use

As discussed in NUREG-1482, Rev. 1, Section 4.4.6, the rod scram test frequency identified in the plant Technical Specifications may be used as the valve testing frequency to minimize rapid reactivity transients and unnecessary wear of the CRD mechanisms. Verifying that the associated control rod meets the scram insertion time limits defined in the Technical Specifications can be an acceptable alternative method of detecting degradation of these valves in lieu of valve stroke measurement.

Technical Specification Surveillance Requirement (SR) 3.1.4.1 requires the scram time for all control rods to be verified within limits prior to thermal power exceeding 40% of rated thermal power after fuel movement, and prior to thermal power exceeding 40% of rated thermal power after each reactor shutdown ≥120 days. In addition, Technical Specification SR 3.1.4.2 requires testing of a representative sample of the control rods at least once per 120 days of operation in Mode 1. The Technical Specification SRs assure the necessary quality of the system and components are maintained, and that facility operation will be within the Safety Limits and the Limiting Condition of Operation will be met. Therefore, scram insertion timing per Technical Specification SR 3.1.4.1 shall be substituted for individual valve testing.

Using the provisions of this relief request as an alternative to the requirements of ISTC-3510, 5130 and 5220 provides a reasonable alternative to the code requirements. The proposed alternative method of detecting degradation provides reasonable assurance of the valves' operational readiness. Therefore, the proposed alternative provides an acceptable level of quality and safety, and Perry Nuclear Power Plant (PNPP) requests that relief be granted pursuant to 10 CFR 50.55a(a)(3)(i).

14. Duration of Proposed Alternative

The proposed alternative identified in this relief request shall be utilized during the Third Ten-Year IST Interval.

15. Precedent

Perry Nuclear Power Plant, Docket No. 50-440, Safety Evaluation Report (SER) dated August 9, 1999, "Safety Evaluation of the Inservice Testing Program Second Ten-Year Interval for Pumps and Valves - Perry Nuclear Power Plant, (TAC No. MA3328)." Previously approved as VR-1 in the aforementioned SER.

8. References

1. Technical Specification SR 3.1.4.1, Control Rod Scram Times.

2. Technical Specification SR 3.1.4.2, Control Rod Scram Times.

3. NUREG-1482, Guidelines for Inservice Testing at Nuclear Power Plants, Revision 1, January 2005, Section 4.4.6, Testing Individual Scram Valves for Control Rods in Boiling-Water Reactors.

4. Refueling Outage Justification RO-31, Control Rod Drive Hydraulic System (C11), Valve 1C11-115.

Proposed Alternative
in Accordance with 10 CFR 50.55a(a)(3)(i)

--Alternative Provides Acceptable Level of Quality and Safety--

1. ASME Code Component(s) Affected

1B21-F041A, Dikkers Valve (ADS)
1B21-F041B, Dikkers Valve (ADS)
1B21-F041C, Dikkers Valve
1B21-F041D, Dikkers Valve
1B21-F041E, Dikkers Valve (ADS)
1B21-F041F, Dikkers Valve (ADS)
1B21-F041G, Dikkers Valve
1B21-F041K, Dikkers Valve
1B21-F047B, Dikkers Valve
1B21-F047C, Dikkers Valve
1B21-F047D, Dikkers Valve (ADS)
1B21-F047F, Dikkers Valve (LLS)
1B21-F047G, Dikkers Valve
1B21-F047H, Dikkers Valve (ADS)
1B21-F051A, Dikkers Valve (LLS)
1B21-F051B, Dikkers Valve (LLS)
1B21-F051C, Dikkers Valve (ADS/LLS)
1B21-F051D, Dikkers Valve (LLS)
1B21-F051G, Dikkers Valve (ADS/LLS)

The Nuclear Boiler System provides Reactor Pressure Vessel (RPV) over pressurization protection by opening the Safety/Relief Valves (SRVs). The SRVs open at the high reactor pressure trip set point. In addition to overpressure protection, the SRVs provide RPV pressure relief by opening to release steam and decrease vessel pressure. Pressure in the vessel is thereby maintained below the American Society of Mechanical Engineers (ASME) Code required limit.

In addition to the above, the Automatic Depressurization System (ADS) and the individual SRVs shall be capable of being manually operated from the main Control Room. This provides the capability to manually depressurize the RPV in the event of the main condenser is not available as a heat sink.

The Nuclear Boiler System ADS shall provide automatic depressurization of the RPV under certain small break Loss Of Coolant Accident (LOCA) conditions so that the low pressure Emergency Core Cooling Systems (ECCS) can adequately cool the core. Note that all of the SRVs, those used for ADS as well as those assigned purely for pressure relief, are used for overpressure protection. All of the SRVs work together to ensure that the ASME Code limit is not exceeded.

2. Applicable Code Edition and Addenda

ASME OM Code-2001, with Addenda through OMb-2003

3. Applicable Code Requirements

ASME OM Code, Appendix I (1995), Section 3410(d), requires that each valve that has been maintained or refurbished in place, removed for maintenance and testing, or both, and reinstalled, shall be remotely actuated at reduced or normal system pressure to verify open and close capability of the valve before resumption of electric power generation. Set-pressure verification is not required.

4. Reason for Request

The nuclear industry experience as a whole has shown that repeated manual actuation of the SRVs and ADS valves can lead to valve seat leakage during plant operation. This experience is substantiated within NUREG-0626, "Generic Evaluation of Feedwater Transients and Small Break Loss-of-Coolant Accidents in GE-Designed Operating Plants and Near Term Operating License Applications," and NUREG-0123, "Standard Technical Specifications for GE Boiling Water Reactors (BWR/5)," which recommend reducing the number of challenges to the ADS valves.

5. Proposed Alternative and Basis for Use

This relief request will allow testing of the SRVs to be performed in two separate stages. Stage 1 will be manual actuation of the valves at the qualified test facility. This will verify the open and close function of the valve with the actuator coupled to the valve stem, and includes both solenoids and the air block valve. Each solenoid is energized, one at a time, resulting in two separate lifts of the SRV disk from the seat. Stage 2 will be manual actuation of the SRV actuators following installation into the plant with the actuator uncoupled from the valve stem. The plant installed testing will verify full operation of the electrical circuitry, manual actuation solenoid valve, block valve, and the actuator. Therefore, all components associated with the SRVs will continue to be tested.

This uncoupled test may also be performed following any maintenance activity that could affect the relief mode of the associated SRV.

With this relief request the existing test method will also remain acceptable, i.e., full stroke exercise from the control room at adequate reactor steam pressure and flow.

The proposed test alternative provides verification of proper control connections by requiring the pneumatic and electrical controls to cycle the actuator on each SRV following installation, without stroking the SRV disk. The plant installed testing will verify full operation of the electrical circuitry, manual actuation solenoid valve, block valve, and the actuator. In addition, the test populations of SRVs removed each refuel outage for setpoint testing would also be tested in the relief mode during bench testing. This setpoint testing provides assurance that the SRV would perform as expected when control air pressure is applied to the actuator assembly.

The proposed test alternative continues to demonstrate full functionality of the SRVs while minimizing the potential for creating valve seat leakage caused by cycling the valve unnecessarily. Therefore, the proposed test alternative provides an acceptable level of quality and safety. Manual actuation of the valves at the qualified test facility will verify the open and close function of the valve with the actuator coupled to the valve stem. This actuation includes both solenoids and the air block valve, with each solenoid being energized, one at a time, and results in two separate lifts of the SRV disk from the seat.

Upon re-installation, uncoupled manual actuation will verify the appropriate function of the electric circuit, both solenoid valves, air block valve, and the valve actuator. This actuation includes both solenoids by lifting of the actuator with the first solenoid and maintaining the actuator open using the second solenoid, thereby, only lifting the actuator once.

Using the provisions of this relief request as an alternative to ASME OM Code, Appendix I (1995), Section 3410(d), provides a reasonable alternative to the Code requirements, based on the determination that the proposed alternative provides an acceptable level of quality and safety. In addition, the method of uncoupled exercising is recognized as acceptable per OM Code-2004, I-3410(d) whereas main disk movement is not required subsequent to installation after maintenance.

6. Duration of Proposed Alternative

The proposed alternative identified in this relief request shall be utilized during the Third Ten-Year IST Interval.

7. Precedents

Perry Nuclear Power Plant, Docket No. 50-440, Safety Evaluation Report (SER) dated February 10, 2005, "Valve Relief Request VR-13, RE: Testing of Safety/Relief Valves (TAC No. MC2518)." Previously approved as VR-13 in the aforementioned SER.

8. References

1. NUREG-0626, "Generic Evaluation of Feedwater Transients and Small Break Loss-of-Coolant Accidents in GE-Designed Operating Plants and Near Term Operating License Applications."

2. NUREG-0123, "Standard Technical Specifications for GE Boiling Water Reactors (BWR/5)."

3. OM Code-2004, Appendix I, Paragraph I-3410(d).

Proposed Alternative
in Accordance with 10 CFR 50.55a(a)(3)(i)

--Alternative Provides Acceptable Level of Quality and Safety--

1. ASME Code Component(s) Affected

Certain motor-operated valve assemblies currently included in the Perry Nuclear Power Plant (PNPP) Motor-Operated Valve (MOV) Program

2. Applicable Code Edition and Addenda

ASME OM Code-2001, with Addenda through OMb-2003

3. Applicable Code Requirements

ISTA-3130, "Application of Codes Cases," ISTA-3130(b) states that code cases shall be applicable to the edition and addenda specified in the test plan.

ISTC-5120, "Motor-Operated Valves," ISTC-5121(a) states that active valves shall have their stroke times measured when exercised in accordance with ISTC-3500.

ISTC-3700, "Position Verification Testing," states in part, that valves with remote position indicators shall be observed locally at least once every two (2) years to verify that valve position is accurately indicated.

4. Reason for Request

Code Case OMN-1 has been determined by the NRC to provide an acceptable level of quality and safety when implemented in conjunction with the conditions imposed in RG 1.192.

Since the NRC staff recommends licensees implement ASME Code Case OMN-1, PNPP proposes to implement Code Case OMN-1, Revision 1 in lieu of the stroke-time provisions specified in ISTC-5120 for MOVs as well as the position verification testing in ISTC-3700.

5. Proposed Alternative and Basis for Use

NUREG-1482, Revision 1, "Alternatives to Stroke-Time Testing," Section 4.2.5 states in part, that as an alternative to MOV stroke-time testing, ASME developed Code Case OMN-1, "Alternative Rules for Preservice and Inservice Testing of Certain Electric Motor-Operated Valve Assemblies in LWR Power Plants," which provides periodic exercising and diagnostic testing for use in assessing the operational readiness of MOVs. Section 4.2.5 further states that the NRC staff recommends licensees implement ASME Code Case OMN-1, as accepted by the NRC (with certain conditions) in the regulations, or Regulatory Guide (RG) 1.192, Revision 0, "Operation and Maintenance Code Case Acceptability, ASME OM Code," as alternatives to the stroke-time testing provisions in the ASME Code for MOV.

RG 1.192 allows licensees with an applicable code of record to implement ASME Code Case OMN-1 (in accordance with the provisions in the regulatory guide) as an alternative to the code provisions for MOV stroke-time testing, without submitting request for relief from their code of record. The code of record for PNPP Third 10-Year IST Interval is OM Code-2001 Edition with Addenda through OMb-2003 and the applicable Code for OMN-1, as stated in RG 1.192, is OMa-1999.

Using the provisions of this relief request as an alternative to the MOV stroke-time testing requirements of ISTC-5120 and position indication verification of ISTC-3700 provides an acceptable level of quality for the determination of valve operational readiness. Code Case OMN-1, Revision 1 should be considered acceptable for use with OM Code-2001 with OMb-2003 Addenda as the code of record.

6. Duration of Proposed Alternative

The proposed alternative identified in this relief request shall be utilized during the Third Ten-Year IST Interval.

7. Precedents

1. NUREG-1482, Revision 1, Section 4.2.5, "Alternatives to Stroke-Time Testing."

2. Regulatory Guide 1.192, Revision 0, "Operation and Maintenance Code Case Acceptability, ASME OM Code," Table 2, "Conditionally Acceptable OM Code Cases."

8. Reference

Code Case OMN-1, "Alternative Rules for Preservice and Inservice Testing of Certain Electric Motor-Operated Valve Assemblies in LWR Power Plants."

Proposed Alternative
in Accordance with 10 CFR 50.55a(a)(3)(i)

--Alternative Provides Acceptable Level of Quality and Safety--

WITHDRAWN DURING REQUEST FOR ADDITION INFORMATION REPONSES

WITHDRAWN DURING REQUEST FOR ADDITION INFORMATION REPONSES

WITHDRAWN DURING REQUEST FOR ADDITION INFORMATION REPONSES

WITHDRAWN DURING REQUEST FOR ADDITION INFORMATION REPONSES

WITHDRAWN DURING REQUEST FOR ADDITION INFORMATION REPONSES

WITHDRAWN DURING REQUEST FOR ADDITION INFORMATION REPONSES

WITHDRAWN DURING REQUEST FOR ADDITION INFORMATION REPONSES

WITHDRAWN DURING REQUEST FOR ADDITION INFORMATION REPONSES

WITHDRAWN DURING REQUEST FOR ADDITION INFORMATION REPONSES

Proposed Alternative
in Accordance with 10 CFR 50.55a(a)(3)(i)

--Alternative Provides Acceptable Level of Quality and Safety--

WITHDRAWN DURING REQUEST FOR ADDITION INFORMATION REPONSES

Proposed Alternative
in Accordance with 10 CFR 50.55a(a)(3)(i)

--Alternative Provides Acceptable Level of Quality and Safety--

1. ASME Code Component(s) Affected

1B21-F041A, Dikkers Valve (ADS) (Class 1)
1B21-F041B, Dikkers Valve (ADS) (Class 1)
1B21-F041C, Dikkers Valve (Class 1)
1B21-F041D, Dikkers Valve (Class 1)
1B21-F041E, Dikkers Valve (ADS) (Class 1)
1B21-F041F, Dikkers Valve (ADS) (Class 1)
1B21-F041G, Dikkers Valve (Class 1)
1B21-F041K, Dikkers Valve (Class 1)
1B21-F047B, Dikkers Valve (Class 1)
1B21-F047C, Dikkers Valve (Class 1)
1B21-F047D, Dikkers Valve (ADS) (Class 1)
1B21-F047F, Dikkers Valve (LLS) (Class 1)
1B21-F047G, Dikkers Valve (Class1)
1B21-F047H, Dikkers Valve (ADS) (Class 1)
1B21-F051A, Dikkers Valve (LLS) (Class 1)
1B21-F051B, Dikkers Valve (LLS) (Class 1)
1B21-F051C, Dikkers Valve (ADS/LLS) (Class 1)
1B21-F051D, Dikkers Valve (LLS) (Class 1)
1B21-F051G, Dikkers Valve (ADS/LLS) (Class 1)

The Nuclear Boiler System provides Reactor Pressure Vessel (RPV) overpressurization protection by opening the Safety/Relief Valves (SRVs). The SRVs open at their reactor pressure set point. In addition to overpressure protection, the SRVs provide RPV pressure relief by opening to release steam and decrease vessel pressure. Pressure in the vessel is thereby maintained below the American Society of Mechanical Engineers (ASME) Code required limit.

In addition to the above, the Automatic Depressurization System (ADS) and the individual SRVs shall be capable of being manually operated from the main control room. This provides the capability to manually depressurize the RPV in the event the main condenser is not available as a heat sink.

The Nuclear Boiler System ADS provides automatic depressurization of the RPV under certain small break Loss Of Coolant Accident (LOCA) conditions so that the low pressure Emergency Core Cooling Systems (ECCS) can adequately cool the core.

Note that all of the SRVs, those used for ADS as well as those assigned purely for pressure relief, are used for overpressure protection.

2. Applicable Code Edition and Addenda

ASME OM Code-2001, with Addenda through OMb-2003.

3. Applicable Code Requirements

Appendix I, Paragraph I-1320(a), "5-Year Test Interval," specifies that Class 1 pressure relief valves shall be tested at least once every five (5) years, starting with initial electric power generation. No maximum limit is specified for the number of valves to be tested within each interval; however, a minimum of 20% of the valves from each valve group shall be tested within any 24-month interval. This 20% shall consist of valves that have not been tested during the current five 5-year interval, if they exist. The test interval for any individual valve shall not exceed 5 years.

4. Reason for Request

The Perry Nuclear Power Plant (PNPP) transitioned from an 18-month fuel cycle to a 24-month fuel cycle on August 29, 2000 via Amendment 115. Prior to transitioning to the 24-month fuel cycle, ASME Code requirements could be satisfied by removing and testing approximately one-third of the 19 SRVs each refueling outage in order to comply with the 5-year test interval requirements for Class 1 pressure relief valves imposed by the code of record during that time. Since transitioning to the 24-month fuel cycle, PNPP must remove at least one-half of the subject relief valves each refueling outage for off-site testing.

The removal of half of the 19 valves versus a third of the valves each outage requires the removal of additional insulation, instrumentation, and other interferences. This additional work also results in an undesirable increase in radiation exposure to maintenance personnel. Therefore, PNPP proposes that each SRV be tested at least once every three refueling cycles (approximately six years) with a minimum of 20% of the valves tested within any 24-month interval.

5. Proposed Alternative and Basis for Use

As an alternative to the code required 5-year test interval per Appendix I, paragraph I-1320(a), PNPP proposes that the subject Class 1 pressure relief valves be tested at least once every three refueling cycles (approximately six years) with a minimum of 20% of the valves tested within any 24-month interval. This 20% would consist of valves that have not been tested during the current three cycle interval, if they exist. The test interval for any individual valve would not exceed three refueling cycles.

To provide technical basis for the proposed request, the setpoint testing results were evaluated for the time period from initial operation to the present time (approximately 20 years, 150 data points). The evaluation showed that the average variance from the setpoint testing data is 0.91% and the calculated standard deviation from the average is 0.72 of the nominal setpoint values.

Amendment 101, which was approved on March 3, 1999, changed the allowable SRV setpoint test range from ±1% to ±3%. As part of the evaluation of the setpoint testing data, it was identified that fifty-two (52) tests exceeded the Technical Specifications as-found value of ±1%. There were four (4) failures where the as-found setpoint exceeded the ±3%, with all 4 of the ±3% failures occurring prior to the adoption of Amendment 101. Two (2) of the 4 failures had no as-found setpoint data obtained, due to severe seat leakage. The PNPP data indicates a slight tendency toward higher as-found setpoints, but this tendency is well within the PNPP Technical Specification required limits, which require current SRV setpoint deviations to be within ±3%.

The proposed alternative of increasing the test interval for the subject Class 1 pressure relief valves from five years to three fuel cycles (approximately six years) would continue to provide an acceptable level of quality and safety while restoring the operational and maintenance flexibility that was lost when the 24-month fuel cycle created the unintended consequences of more frequent testing. This proposed alternative will continue to provide assurance of the valves' operational readiness and provides an acceptable level of quality and safety pursuant to 10 CFR 50.55a(a)(3)(i).

6. Duration of Proposed Alternative

The proposed alternative identified in this relief request shall be utilized during the Third Ten-Year IST Interval.

7. Precedent

Nine Mile Point Nuclear Station, Docket No. 50-410, Safety Evaluation Report (SER) dated April 17, 2001, "Safety Evaluation of the Alternative to ASME Code Regarding Inservice Testing of Main Steam Safety/Relief Valves, (TAC No. MB0290)."

8. References

1. SER dated August 29, 2000. Perry Nuclear Power Plant, Unit 1, Docket No. 50-440, "Issuance of Amendment RE: Revisions of Various Surveillance Requirements to Support a 24-Month Operating Cycle (TAC No. MA5930)."

2. SER dated March 3, 1999. Perry Nuclear Power Plant, Unit 1, Docket No. 50-440, Amendment 101 (SRVs 1% to 3%) to Facility Operating License No. NPF-58 Perry Nuclear Power Plant, Unit 1 (TAC No. MA2290).

3.3 Valve Testing Index

Valve Testing Index

System	Dwg. No.	Page(s)
Nuclear Boiler (B21)	D-302-121	3.4-1
	D-302-605	3.4-2 through 3.4-19
	D-302-607	3.4-20
Reactor Water Recirculation (B33)	D-302-602	3.4-21
Control Rod Drive Hydraulics (C11)	D-302-871	3.4-22
	D-302-872	3.4-23 through 3.4-24
Standby Liquid Control (C41)	D-302-691	3.4-25 through 3.4-26
	D-302-692	3.4-27 through 3.4-28
Plant Radiation Monitoring (D17)	D-806-004	3.4-29
	D-806-007	3.4-30
Containment Atmosphere Monitoring (D23)	D-302-881	3.4-31 through 3.4-32
Residual Heat Removal (E12)	D-302-641	3.4-33 through 3.4-36
	D-302-642	3.4-37 through 3.4-44
	D-302-643	3.4-45 through 3.4-48
Low Pressure Core Spray (E21)	D-302-705	3.4-49 through 3.4-50
High Pressure Core Spray (E22)	D-302-701	3.4-51 through 3.4-53
Reactor Core Isolation Cooling (E51)	D-302-631	3.4-54 through 3.4-57
	D-302-632	3.4-58 through 3.4-60
Containment Integrated Leak Rate Testing (E61)	D-302-811	3.4-61
Inclined Fuel Transfer	D-302-970	3.4-62
Reactor Water Cleanup (G33)	D-302-671	3.4-63
	D-302-672	3.4-64 through 3.4-65
Fuel Pool Cooling and Cleanup (G41)	D-302-651	3.4-66
	D-302-654	3.4-67
	D-302-655	3.4-68
Suppression Pool Cleanup (G42)	D-302-681	3.4-69

Valve Testing Index (Cont.)

System	Dwg. No.	Page(s)
Suppression Pool Makeup (G43)	D-302-686	3.4-70 through 3.4-71
Liquid Radwaste (G50)	D-302-737	3.4-72
Liquid Radwaste Sumps (G61)	D-302-739 D-302-740	3.4-73 3.4-74
Containment Vessel and Drywell Purge (M14)	D-912-604	3.4-75 through 3.4-77
Drywell (M16) and Containment Vacuum Relief (M17)	D-912-606	3.4-78 through 3.4-80
Combustible Gas Control (M51)	D-302-831 D-302-832	3.4-81 3.4-82 through 3.4-85
Main Steam (N11)	D-302-011	3.4-86
Main, Reheat, Extraction, and Misc., Drains (N22)	D-302-121	3.4-87
Feedwater Leakage Control (N27)	D-302-082 D-302-971	3.4-88 3.4-89
Condensate Transfer and Storage (P11)	D-302-102	3.4-90
Mixed Bed Demin, and Distribution (P22)	D-302-713	3.4-91
Service Water (P41)	D-302-212	3.4-92
Emergency Closed Cooling Water (P42)	D-302-621 D-352-621 D-302-622	3.4-93 3.4-94 through 3.4-95 3.4-96
Nuclear Closed Cooling (P43)	D-302-613	3.4-97
Emergency Service Water (P45)	D-302-791 D-302-792	3.4-98 through 3.4-100 3.4-101
Control Complex Chilled Water (P47)	D-913-001 D-913-002	3.4-102 3.4-103
ESW Screen Wash (P49)	D-302-214	3.4-104

Valve Testing Index (Cont.)

System	Dwg. No.	Page(s)
Containment Vessel Chilled Water (P50)	D-913-008	3.4-105
Service Air Distribution (P51)	D-302-242	3.4-106
Instrument Air (P52)	D-302-243 D-302-244	3.4-107 3.4-108
Penetration Pressurization (P53)	D-302-761 D-302-762	3.4-109 through 3.4-111 3.4-112 through 3.4-115
Fire Service Water and CO_2 (P54)	D-914-003 D-914-005	3.4-116 3.4-117
Safety-Related Instrument Air (P57)	D-302-271	3.4-118 through 3.4-119
Nitrogen Supply (P86)	D-302-950	3.4-120
Post Accident Sampling (P87)	D-302-431	3.4-121 through 3.4-124
Standby Diesel Generator Starting Air (R44)	D-302-351	3.4-125 through 3.4-127
HPCS Diesel Generator Air (E22A)	D-302-358	3.4-128
Standby Diesel Generator Fuel Oil (R45)	D-302-352 D-302-356	3.4-129 3.4-130
Standby Diesel Generator Jacket Water (R46)	D-302-354	3.4-131
Standby Diesel Generator Lube Oil (R47)	D-302-353	3.4-132

SYSTEM: NUCLEAR BOILER (B21) DWG. NO. D-302-121

VALVE/ DEVICE NO.	CLASS AND DWG. COOR.	VALVE CATEGORY/ ACTIVE OR PASSIVE	SIZE (in.) AND TYPE	ACTUATOR TYPE/ NORMAL POSITION	TEST REQ. AND FREQ.	SURV INST. NO. SVI-B21	STROKE TIME REFERENCE VALUE(sec)	LEAKAGE LIMIT (sccm or gpm)	DEVICE SET PRESS. REFERENCE VALUE(psi)	JUSTIFI-CATIONS & RELIEF REQUEST NO.	REMARKS
1B21-F016	1	A	3	MO	EC -Q	T2006					
	D-11	ACTIVE	GT	O	STC-Q	T2006	19.6			VR-3	VR-Pending 9186
					LJ -PB	T9423		1000.0			
					PI -2Y	T2006				VR-3	
1B21-F019	1	A	3	MO	EC -Q	T2006					SVI-B21-T2008
	D-10	ACTIVE	GT	O	STC-Q	T2006	20.2			VR-3	(PI) REMOTE S/D
					LJ -PB	T9423		1000.0			LOCAL BREAKER
					PI -2Y	T2006				VR-3	VR-Pending 16817

VALVE/ DEVICE NO.	CLASS AND DWG. COOR.	VALVE CATEGORY/ ACTIVE OR PASSIVE	SIZE (in.) AND TYPE	ACTUATOR TYPE/ NORMAL POSITION	TEST REQ. AND FREQ.	SURV INST. NO. SVI-B21	STROKE TIME REFERENCE VALUE(sec)	LEAKAGE LIMIT (sccm or gpm)	DEVICE SET PRESS. REFERENCE VALUE(psi)	JUSTIFI-CATIONS & RELIEF REQUEST NO.	REMARKS
1B21-F001	1	B	2	MO	PI -2Y	T2004					
	E-13	PASSIVE	GL	C							
1B21-F002	1	B	2	MO	PI -2Y	T2004					
	D-13	PASSIVE	GL	C							
1B21-F005	1	B	2	MO	PI -2Y	T2004					NOTE: 1
	D-13	PASSIVE	GL	O							
1B21-F022A	1	A	26	AO	PC -Q	T0039(C71)					SVI-C61-T1104
	C-8	ACTIVE	GL	O	EC -CS	T2001				CS-5	(PI) REMOTE S/D
					STC-CS	T2001	3.1			CS-5	PANEL
					FS -CS	T2001				CS-5	
					LJ -2Y	T9000		NOTE: 6			
					PI -2Y	T2001					
1B21-F022B	1	A	26	AO	PC -Q	T0039(C71)					SVI-C61-T1104
	E-9	ACTIVE	GL	O	EC -CS	T2001				CS-5	(PI) REMOTE S/D
					STC-CS	T2001	3.2			CS-5	PANEL
					FS -CS	T2001				CS-5	
					LJ -2Y	T9000		NOTE: 6			
					PI -2Y	T2001					
1B21-F022C	1	A	26	AO	PC -Q	T0039(C71)					SVI-C61-T1104
	F-9	ACTIVE	GL	O	EC -CS	T2001				CS-5	(PI) REMOTE S/D
					STC-CS	T2001	3.2			CS-5	PANEL
					FS -CS	T2001				CS-5	
					LJ -2Y	T9000		NOTE: 6			
					PI -2Y	T2001					

VALVE/ DEVICE NO.	CLASS AND DWG. COOR.	VALVE CATEGORY/ ACTIVE OR PASSIVE	SIZE (in.) AND TYPE	ACTUATOR TYPE/ NORMAL POSITION	TEST REQ. AND FREQ.	SURV INST. NO. SVI-B21	STROKE TIME REFERENCE VALUE(sec)	LEAKAGE LIMIT (sccm or gpm)	DEVICE SET PRESS. REFERENCE VALUE(psi)	JUSTIFI-CATIONS & RELIEF REQUEST NO.	REMARKS
1B21-F022D	1	A	26	AO	PC -Q	T0039(C71)					SVI-C61-T1104
	F-9	ACTIVE	GL	O	EC -CS	T2001				CS-5	(PI) REMOTE S/D
					STC-CS	T2001	3.0			CS-5	PANEL
					FS -CS	T2001				CS-5	
					LJ -2Y	T9000		NOTE: 6			
					PI -2Y	T2001					
1B21-F024A	3	AC	1	SE	EO -RO	T2009				RO-19	INBD MSIV
	B-8	ACTIVE	CH	C	EC -RO	T2200				RO-19	(FO22A) ACCUM.
					LD -2Y	T2200		2,885.0			NOTE: 3
1B21-F024B	3	AC	1	SE	EO -RO	T2009				RO-19	INBD MSIV
	E-9	ACTIVE	CH	C	EC -RO	T2200				RO-19	(FO22B) ACCUM.
					LD -2Y	T2200		2,885.0			NOTE: 3
1B21-F024C	3	AC	1	SE	EO -RO	T2009				RO-19	INBD MSIV
	F-9	ACTIVE	CH	C	EC -RO	T2200				RO-19	(FO22C) ACCUM.
					LD -2Y	T2200		2,885.0			NOTE: 3
1B21-F024D	3	AC	1	SE	EO -RO	T2009				RO-19	INBD MSIV
	F-9	ACTIVE	CH	C	EC -RO	T2200				RO-19	(FO22D) ACCUM.
					LD -2Y	T2200		2,885.0			NOTE: 3
1B21-F028A	1	A	26	AO	PC -Q	T0039(C71)					
	C-6	ACTIVE	GL	O	EC -CS	T2001				CS-5	
					STC-CS	T2001	3.3			CS-5	
					FS -CS	T2001				CS-5	
					LJ -2Y	T9000		NOTE: 6			
					PI -2Y	T2001					

VALVE/ DEVICE NO.	CLASS AND DWG. COOR.	VALVE CATEGORY/ ACTIVE OR PASSIVE	SIZE (in.) AND TYPE	ACTUATOR TYPE/ NORMAL POSITION	TEST REQ. AND FREQ.	SURV INST. NO. SVI-B21	STROKE TIME REFERENCE VALUE(sec)	LEAKAGE LIMIT (sccm or gpm)	DEVICE SET PRESS. REFERENCE VALUE(psi)	JUSTIFI-CATIONS & RELIEF REQUEST NO.	REMARKS
1B21-F028B	1	A	26	AO	PC -Q	T0039(C71)					
	E-8	ACTIVE	GL	O	EC -CS	T2001				CS-5	
					STC-CS	T2001	3.2			CS-5	
					FS -CS	T2001				CS-5	
					LJ -2Y	T9000		NOTE: 6			
					PI -2Y	T2001					
1B21-F028C	1	A	26	AO	PC -Q	T0039(C71)					
	F-8	ACTIVE	GL	O	EC -CS	T2001				CS-5	
					STC-CS	T2001	4.5			CS-5	
					FS -CS	T2001				CS-5	
					LJ -2Y	T9000		NOTE: 6			
					PI -2Y	T2001					
1B21-F028D	1	A	26	AO	PC -Q	T0039(C71)					
	F-8	ACTIVE	GL	O	EC -CS	T2001				CS-5	
					STC-CS	T2001	3.9			CS-5	
					FS -CS	T2001				CS-5	
					LJ -2Y	T9000		NOTE: 6			
					PI -2Y	T2001					
1B21-F029A	3	AC	1	SE	EO -RO	T2009				RO-19	OUTBD MSIV
	B-6	ACTIVE	CH	C	EC -RO	T2201				RO-19	(FO28A) ACCUM.
					LD -2Y	T2201		1,873.4			NOTE: 4
1B21-F029B	3	AC	1	SE	EO -RO	T2009				RO-19	OUTBD MSIV
	E-8	ACTIVE	CH	C	EC -RO	T2201				RO-19	(FO28B) ACCUM.
					LD -2Y	T2201		1,873.4			NOTE: 4

VALVE/ DEVICE NO.	CLASS AND DWG. COOR.	VALVE CATEGORY/ ACTIVE OR PASSIVE	SIZE (in.) AND TYPE	ACTUATOR TYPE/ NORMAL POSITION	TEST REQ. AND FREQ.	SURV INST. NO. SVI-B21	STROKE TIME REFERENCE VALUE(sec)	LEAKAGE LIMIT (sccm or gpm)	DEVICE SET PRESS. REFERENCE VALUE(psi)	JUSTIFI-CATIONS & RELIEF REQUEST NO.	REMARKS
1B21-F029C	3	AC	1	SE	EO -RO	T2009				RO-19	OUTBD MSIV
	F-8	ACTIVE	CH	C	EC -RO	T2201				RO-19	(F028C) ACCUM.
					LD -2Y	T2201		1,873.4			NOTE: 4
1B21-F029D	3	AC	1	SE	EO -RO	T2009				RO-19	OUTBD MSIV
	F-8	ACTIVE	CH	C	EC -RO	T2201				RO-19	(F028D) ACCUM.
					LD -2Y	T2201		1,873.4			NOTE: 4
1B21-F036C	3	C	1	SE	EO -RO	T2009				RO-5	NON-ADS (F041C)
	B-11	ACTIVE	CH	C	EC -RO	T2007				RO-5	ACCUM.
1B21-F036D	3	C	1	SE	EO -RO	T2009				RO-5	NON-ADS (F041D)
	B-11	ACTIVE	CH	C	EC -RO	T2007				RO-5	ACCUM.
1B21-F036G	3	C	1	SE	EO -RO	T2009				RO-5	NON-ADS (F041G)
	B-11	ACTIVE	CH	C	EC -RO	T2007				RO-5	ACCUM.
1B21-F036H	3	C	1	SE	EO -RO	T2009				RO-5	NON-ADS (F041K)
	B-11	ACTIVE	CH	C	EC -RO	T2007				RO-5	ACCUM.
1B21-F036J	3	C	1	SE	EO -RO	T2009				RO-5	NON-ADS (F047B)
	B-11	ACTIVE	CH	C	EC -RO	T2007				RO-5	ACCUM.
1B21-F036K	3	C	1	SE	EO -RO	T2009				RO-5	NON-ADS (F047C)
	B-11	ACTIVE	CH	C	EC -RO	T2007				RO-5	ACCUM.
1B21-F036M	3	C	1	SE	EO -RO	T2009				RO-5	NON-ADS (F047F)
	B-11	ACTIVE	CH	C	EC -RO	T2007				RO-5	ACCUM.
1B21-F036N	3	C	1	SE	EO -RO	T2009				RO-5	NON-ADS (F047G)
	B-11	ACTIVE	CH	C	EC -RO	T2007				RO-5	ACCUM.

VALVE/ DEVICE NO.	CLASS AND DWG. COOR.	VALVE CATEGORY/ ACTIVE OR PASSIVE	SIZE (in.) AND TYPE	ACTUATOR TYPE/ NORMAL POSITION	TEST REQ. AND FREQ.	SURV INST. NO. SVI-B21	STROKE TIME REFERENCE VALUE(sec)	LEAKAGE LIMIT (sccm or gpm)	DEVICE SET PRESS. REFERENCE VALUE(psi)	JUSTIFI-CATIONS & RELIEF REQUEST NO.	REMARKS
1B21-F036R	3	C	1	SE	EO -RO	T2009				RO-5	NON-ADS (F051A)
	B-11	ACTIVE	CH	C	EC -RO	T2007				RO-5	ACCUM.
1B21-F036S	3	C	1	SE	EO -RO	T2009				RO-5	NON-ADS (F051B)
	B-11	ACTIVE	CH	C	EC -RO	T2007				RO-5	ACCUM.
1B21-F036U	3	C	1	SE	EO -RO	T2009				RO-5	NON-ADS (F051D)
	A-3	ACTIVE	CH	C	EC -RO	T2007				RO-5	ACCUM.
1B21-F037A	3	C	6	SE	EO -RO	T2011				RO-18	SRV (F041A)
	B-10	ACTIVE	CH	C	EC -RO	T2011				RO-18	DOWNCOMER
1B21-F037B	3	C	6	SE	EO -RO	T2011				RO-18	SRV (F041B)
	B-10	ACTIVE	CH	C	EC -RO	T2011				RO-18	DOWNCOMER
1B21-F037C	3	C	6	SE	EO -RO	T2011				RO-18	SRV (F041C)
	B-10	ACTIVE	CH	C	EC -RO	T2011				RO-18	DOWNCOMER
1B21-F037D	3	C	6	SE	EO -RO	T2011				RO-18	SRV (F041D)
	B-10	ACTIVE	CH	C	EC -RO	T2011				RO-18	DOWNCOMER
1B21-F037E	3	C	6	SE	EO -RO	T2011				RO-18	SRV (F041E)
	B-10	ACTIVE	CH	C	EC -RO	T2011				RO-18	DOWNCOMER
1B21-F037F	3	C	6	SE	EO -RO	T2011				RO-18	SRV (F041F)
	B-10	ACTIVE	CH	C	EC -RO	T2011				RO-18	DOWNCOMER
1B21-F037G	3	C	6	SE	EO -RO	T2011				RO-18	SRV (F041G)
	B-10	ACTIVE	CH	C	EC -RO	T2011				RO-18	DOWNCOMER
1B21-F037H	3	C	6	SE	EO -RO	T2011				RO-18	SRV (F041K)
	B-10	ACTIVE	CH	C	EC -RO	T2011				RO-18	DOWNCOMER

VALVE/ DEVICE NO.	CLASS AND DWG. COOR.	VALVE CATEGORY/ ACTIVE OR PASSIVE	SIZE (in.) AND TYPE	ACTUATOR TYPE/ NORMAL POSITION	TEST REQ. AND FREQ.	SURV INST. NO. SVI-B21	STROKE TIME REFERENCE VALUE(sec)	LEAKAGE LIMIT (sccm or gpm)	DEVICE SET PRESS. REFERENCE VALUE(psi)	JUSTIFI-CATIONS & RELIEF REQUEST NO.	REMARKS
1B21-F037J	3	C	6	SE	EO -RO	T2011				RO-18	SRV (F047B)
	B-10	ACTIVE	CH	C	EC -RO	T2011				RO-18	DOWNCOMER
1B21-F037K	3	C	6	SE	EO -RO	T2011				RO-18	SRV (F047C)
	B-10	ACTIVE	CH	C	EC -RO	T2011				RO-18	DOWNCOMER
1B21-F037L	3	C	6	SE	EO -RO	T2011				RO-18	SRV (F047D)
	B-10	ACTIVE	CH	C	EC -RO	T2011				RO-18	DOWNCOMER
1B21-F037M	3	C	6	SE	EO -RO	T2011				RO-18	SRV (F047F)
	B-10	ACTIVE	CH	C	EC -RO	T2011				RO-18	DOWNCOMER
1B21-F037N	3	C	6	SE	EO -RO	T2011				RO-18	SRV (F047G)
	B-10	ACTIVE	CH	C	EC -RO	T2011				RO-18	DOWNCOMER
1B21-F037P	3	C	6	SE	EO -RO	T2011				RO-18	SRV (F047H)
	B-10	ACTIVE	CH	C	EC -RO	T2011				RO-18	DOWNCOMER
1B21-F037R	3	C	6	SE	EO -RO	T2011				RO-18	SRV (F051A)
	B-10	ACTIVE	CH	C	EC -RO	T2011				RO-18	DOWNCOMER
1B21-F037S	3	C	6	SE	EO -RO	T2011				RO-18	SRV (F051B)
	B-10	ACTIVE	CH	C	EC -RO	T2011				RO-18	DOWNCOMER
1B21-F037T	3	C	6	SE	EO -RO	T2011				RO-18	SRV (F051C)
	B-10	ACTIVE	CH	C	EC -RO	T2011				RO-18	DOWNCOMER
1B21-F037U	3	C	6	SE	EO -RO	T2011				RO-18	SRV (F051D)
	B-2	ACTIVE	CH	C	EC -RO	T2011				RO-18	DOWNCOMER
1B21-F037V	3	C	6	SE	EO -RO	T2011				RO-18	SRV (F051G)
	B-10	ACTIVE	CH	C	EC -RO	T2011				RO-18	DOWNCOMER

SYSTEM: NUCLEAR BOILER (B21) DWG. NO. D-302-605

VALVE/ DEVICE NO.	CLASS AND DWG. COOR.	VALVE CATEGORY/ ACTIVE OR PASSIVE	SIZE (in.) AND TYPE	ACTUATOR TYPE/ NORMAL POSITION	TEST REQ. AND FREQ.	SURV INST. NO. SVI-B21	STROKE TIME REFERENCE VALUE(sec)	LEAKAGE LIMIT (sccm or gpm)	DEVICE SET PRESS. REFERENCE VALUE(psi)	JUSTIFI-CATIONS & RELIEF REQUEST NO.	REMARKS
1B21-F039A	3	C	1	SE	EO -RO	T2009				RO-5	ADS (F041A)
	D-10	ACTIVE	CH	C	EC -RO	T2007				RO-5	ACCUM.
1B21-F039B	3	C	1	SE	EO -RO	T2009				RO-5	ADS (F041B)
	D-10	ACTIVE	CH	C	EC -RO	T2007				RO-5	ACCUM.
1B21-F039E	3	C	1	SE	EO -RO	T2009				RO-5	ADS (F041E)
	D-10	ACTIVE	CH	C	EC -RO	T2007				RO-5	ACCUM.
1B21-F039F	3	C	1	SE	EO -RO	T2009				RO-5	ADS (F041F)
	D-10	ACTIVE	CH	C	EC -RO	T2007				RO-5	ACCUM.
1B21-F039L	3	C	1	SE	EO -RO	T2009				RO-5	ADS (F047D)
	D-10	ACTIVE	CH	C	EC -RO	T2007				RO-5	ACCUM.
1B21-F039P	3	C	1	SE	EO -RO	T2009				RO-5	ADS (F047H)
	D-10	ACTIVE	CH	C	EC -RO	T2007				RO-5	ACCUM.
1B21-F039T	3	C	1	SE	EO -RO	T2009				RO-5	ADS (F051C)
	D-10	ACTIVE	CH	C	EC -RO	T2007				RO-5	ACCUM.
1B21-F039V	3	C	1	SE	EO -RO	T2009				RO-5	ADS (F051G)
	D-10	ACTIVE	CH	C	EC -RO	T2007				RO-5	ACCUM.
1B21-F040	3	C	2	SE	EO -RO	T2011				RO-18	RX HEAD VENT
	F-13	ACTIVE	CH	C	EC -RO	T2011				RO-18	LINE
1B21-F041A	1	C	10	SE	RT -6Y	T2100			1165.0	VR-6	DIKKERS (ADS)
	D-10	ACTIVE	SR/AO	C	RC -RO	T2012/T2005			1123.0	VR-2	VALVE
1B21-F041B	1	C	10	SE	RT -6Y	T2100			1165.0	VR-6	DIKKERS (ADS)
	D-10	ACTIVE	SR/AO	C	RC -RO	T2012/T2005			1123.0	VR-2	VALVE

VALVE/ DEVICE NO.	CLASS AND DWG. COOR.	VALVE CATEGORY/ ACTIVE OR PASSIVE	SIZE (in.) AND TYPE	ACTUATOR TYPE/ NORMAL POSITION	TEST REQ. AND FREQ.	SURV INST. NO. SVI-B21	STROKE TIME REFERENCE VALUE(sec)	LEAKAGE LIMIT (sccm or gpm)	DEVICE SET PRESS. REFERENCE VALUE(psi)	JUSTIFI-CATIONS & RELIEF REQUEST NO.	REMARKS
1B21-F041C	1	C	10	SE	RT -6Y	T2100			1165.0	VR-6	DIKKERS VALVE
	C-10	ACTIVE	SR/AO	C	RC -R0	T2012/T2005			1123.0	VR-2	
1B21-F041D	1	C	10	SE	RT -6Y	T2100			1165.0	VR-6	DIKKERS VALVE
	C-10	ACTIVE	SR/AO	C	RC -R0	T2012/T2005			1123.0	VR-2	
1B21-F041E	1	C	10	SE	RT -6Y	T2100			1165.0	VR-6	DIKKERS (ADS)
	D-10	ACTIVE	SR/AO	C	RC -R0	T2012/T2005			1123.0	VR-2	VALVE
1B21-F041F	1	C	10	SE	RT -6Y	T2100			1165.0	VR-6	DIKKERS (ADS)
	D-10	ACTIVE	SR/AO	C	RC -R0	T2012/T2005			1123.0	VR-2	VALVE
1B21-F041G	1	C	10	SE	RT -6Y	T2100			1165.0	VR-6	DIKKERS VALVE
	C-10	ACTIVE	SR/AO	C	RC -R0	T2012/T2005			1123.0	VR-2	
1B21-F041K	1	C	10	SE	RT -6Y	T2100			1165.0	VR-6	DIKKERS VALVE
	C-10	ACTIVE	SR/AO	C	RC -R0	T2012/T2005			1123.0	VR-2	
1B21-F047B	1	C	10	SE	RT -6Y	T2100			1180.0	VR-6	DIKKERS VALVE
	C-10	ACTIVE	SR/AO	C	RC -R0	T2012/T2005			1113.0	VR-2	
1B21-F047C	1	C	10	SE	RT -6Y	T2100			1180.0	VR-6	DIKKERS VALVE
	C-10	ACTIVE	SR/AO	C	RC -R0	T2012/T2005			1113.0	VR-2	
1B21-F047D	1	C	10	SE	RT -6Y	T2100			1180.0	VR-6	DIKKERS (ADS)
	D-10	ACTIVE	SR/AO	C	RC -R0	T2012/T2005			1113.0	VR-2	VALVE
1B21-F047F	1	C	10	SE	RT -6Y	T2100			1180.0	VR-6	DIKKERS VALVE
	C-10	ACTIVE	SR/AO	C	RC -R0	T2012/T2005			1113.0	VR-2	
1B21-F047G	1	C	10	SE	RT -6Y	T2100			1180.0	VR-6	DIKKERS VALVE
	C-10	ACTIVE	SR/AO	C	RC -R0	T2012/T2005			1113.0	VR-2	

SYSTEM: NUCLEAR BOILER (B21) DWG. NO. D-302-605

VALVE/ DEVICE NO.	CLASS AND DWG. COOR.	VALVE CATEGORY/ ACTIVE OR PASSIVE	SIZE (in.) AND TYPE	ACTUATOR TYPE/ NORMAL POSITION	TEST REQ. AND FREQ.	SURV INST. NO. SVI-B21	STROKE TIME REFERENCE VALUE(sec)	LEAKAGE LIMIT (sccm or gpm)	DEVICE SET PRESS. REFERENCE VALUE(psi)	JUSTIFI-CATIONS & RELIEF REQUEST NO.	REMARKS
1B21-F047H	1	C	10	SE	RT -6Y	T2100			1180.0	VR-6	DIKKERS (ADS)
	D-10	ACTIVE	SR/AO	C	RC -R0	T2012/T2005			1113.0	VR-2	VALVE
1B21-F051A	1	C	10	SE	RT -6Y	T2100			1190.0	VR-6	DIKKERS VALVE
	C-10	ACTIVE	SR/AO	C	RC -R0	T2012/T2005			1113.0	VR-2	
1B21-F051B	1	C	10	SE	RT -6Y	T2100			1190.0	VR-6	DIKKERS VALVE
	C-10	ACTIVE	SR/AO	C	RC -R0	T2012/T2005			1113.0	VR-2	
1B21-F051C	1	C	10	SE	RT -6Y	T2100			1190.0	VR-6	DIKKERS (ADS)
	D-10	ACTIVE	SR/AO	C	RC -R0	T2012/T2005			1113.0	VR-2	VALVE SVI-C61-
											T1104 (PI)
1B21-F051D	1	C	10	SE	RT -6Y	T2100			1190.0	VR-6	DIKKERS (ADS)
	C-2	ACTIVE	SR/AO	C	RC -R0	T2012/T2005			1103.0	VR-2	VALVE SVI-C61-
											T1104 (PI)
1B21-F051G	1	C	10	SE	RT -6Y	T2100			1190.0	VR-6	DIKKERS (ADS)
	D-10	ACTIVE	SR/AO	C	RC -R0	T2012/T2005			1113.0	VR-2	VALVE SVI-C61-
											T1104 (PI)
1B21-F078A	3	C	6	SE	EO -R0	T2011				R0-18	SRV (F041A)
	B-10	ACTIVE	CH	C	EC -RO	T2011				R0-18	DOWNCOMER
1B21-F078B	3	C	6	SE	EO -R0	T2011				R0-18	SRV (F041B)
	B-10	ACTIVE	CH	C	EC -RO	T2011				R0-18	DOWNCOMER
1B21-F078C	3	C	6	SE	EO -R0	T2011				R0-18	SRV (F041C)
	B-10	ACTIVE	CH	C	EC -RO	T2011				R0-18	DOWNCOMER

SYSTEM: NUCLEAR BOILER (B21) DWG. NO. D-302-605

VALVE/ DEVICE NO.	CLASS AND DWG. COOR.	VALVE CATEGORY/ ACTIVE OR PASSIVE	SIZE (in.) AND TYPE	ACTUATOR TYPE/ NORMAL POSITION	TEST REQ. AND FREQ.	SURV INST. NO. SVI-B21	STROKE TIME REFERENCE VALUE(sec)	LEAKAGE LIMIT (sccm or gpm)	DEVICE SET PRESS. REFERENCE VALUE(psi)	JUSTIFI-CATIONS & RELIEF REQUEST NO.	REMARKS
1B21-F078D	3	C	6	SE	EO -RO	T2011				R0-18	SRV (F041D)
	B-10	ACTIVE	CH	C	EC -RO	T2011				R0-18	DOWNCOMER
1B21-F078E	3	C	6	SE	EO -RO	T2011				R0-18	SRV (F041E)
	B-10	ACTIVE	CH	C	EC -RO	T2011				R0-18	DOWNCOMER
1B21-F078F	3	C	6	SE	EO -RO	T2011				R0-18	SRV (F041F)
	B-10	ACTIVE	CH	C	EC -RO	T2011				R0-18	DOWNCOMER
1B21-F078G	3	C	6	SE	EO -RO	T2011				R0-18	SRV (F041G)
	B-10	ACTIVE	CH	C	EC -RO	T2011				R0-18	DOWNCOMER
1B21-F078H	3	C	6	SE	EO -RO	T2011				R0-18	SRV (F041K)
	B-10	ACTIVE	CH	C	EC -RO	T2011				R0-18	DOWNCOMER
1B21-F078J	3	C	6	SE	EO -RO	T2011				R0-18	SRV (F047B)
	B-10	ACTIVE	CH	C	EC -RO	T2011				R0-18	DOWNCOMER
1B21-F078K	3	C	6	SE	EO -RO	T2011				R0-18	SRV (F047C)
	B-10	ACTIVE	CH	C	EC -RO	T2011				R0-18	DOWNCOMER
1B21-F078L	3	C	6	SE	EO -RO	T2011				R0-18	SRV (F047D)
	B-10	ACTIVE	CH	C	EC -RO	T2011				R0-18	DOWNCOMER
1B21-F078M	3	C	6	SE	EO -RO	T2011				R0-18	SRV (F047F)
	B-10	ACTIVE	CH	C	EC -RO	T2011				R0-18	DOWNCOMER
1B21-F078N	3	C	6	SE	EO -RO	T2011				R0-18	SRV (F047G)
	B-10	ACTIVE	CH	C	EC -RO	T2011				R0-18	DOWNCOMER
1B21-F078P	3	C	6	SE	EO -RO	T2011				R0-18	SRV (F047H)
	B-10	ACTIVE	CH	C	EC -RO	T2011				R0-18	DOWNCOMER

VALVE/ DEVICE NO.	CLASS AND DWG. COOR.	VALVE CATEGORY/ ACTIVE OR PASSIVE	SIZE (in.) AND TYPE	ACTUATOR TYPE/ NORMAL POSITION	TEST REQ. AND FREQ.	SURV INST. NO. SVI-B21	STROKE TIME REFERENCE VALUE(sec)	LEAKAGE LIMIT (sccm or gpm)	DEVICE SET PRESS. REFERENCE VALUE(psi)	JUSTIFI-CATIONS & RELIEF REQUEST NO.	REMARKS
1B21-F078R	3	C	6	SE	EO -RO	T2011				R0-18	SRV (F051A)
	B-10	ACTIVE	CH	C	EC -RO	T2011				R0-18	DOWNCOMER
1B21-F078S	3	C	6	SE	EO -RO	T2011				R0-18	SRV (F051B)
	B-10	ACTIVE	CH	C	EC -RO	T2011				R0-18	DOWNCOMER
1B21-F078T	3	C	6	SE	EO -RO	T2011				R0-18	SRV (F051C)
	B-10	ACTIVE	CH	C	EC -RO	T2011				R0-18	DOWNCOMER
1B21-F078U	3	C	6	SE	EO -RO	T2011				R0-18	SRV (F051D)
	B-2	ACTIVE	CH	C	EC -RO	T2011				R0-18	DOWNCOMER
1B21-F078V	3	C	6	SE	EO -RO	T2011				R0-18	SRV (F051G)
	B-10	ACTIVE	CH	C	EC -RO	T2011				R0-18	DOWNCOMER
1B21-F410A	3	B	2	SO	E0 -RO	T2012/T2005					SRV (F041A)
	D-11	ACTIVE	TW	C	EC -RO	T2012/T2005					CONTROL VALVE
					STO-RO	T2012/T2005	N/A				Skid-Mounted
					STC-RO	T2012/T2005	N/A				Note 12
					FS -RO	T2012/T2005					
					PI -RO	T2012/T2005					
1B21-F410B	3	B	2	SO	E0 -RO	T2012/T2005					SRV (F041A)
	D-11	ACTIVE	TW	C	EC -RO	T2012/T2005					CONTROL VALVE
					STO-RO	T2012/T2005	N/A				Skid-Mounted
					STC-RO	T2012/T2005	N/A				Note 12
					FS -RO	T2012/T2005					
					PI -RO	T2012/T2005					
1B21-F411A	3	B	2	SO	E0 -RO	T2012/T2005					SRV (F041B)
	D-11	ACTIVE	TW	C	EC -RO	T2012/T2005					CONTROL VALVE
					STO-RO	T2012/T2005	N/A				Skid-Mounted
					STC-RO	T2012/T2005	N/A				Note 12
					FS -RO	T2012/T2005					
					PI -RO	T2012/T2005					

VALVE/ DEVICE NO.	CLASS AND DWG. COOR.	VALVE CATEGORY/ ACTIVE OR PASSIVE	SIZE (in.) AND TYPE	ACTUATOR TYPE/ NORMAL POSITION	TEST REQ. AND FREQ.	SURV INST. NO. SVI-B21	STROKE TIME REFERENCE VALUE(sec)	LEAKAGE LIMIT (sccm or gpm)	DEVICE SET PRESS. REFERENCE VALUE(psi)	JUSTIFI-CATIONS & RELIEF REQUEST NO.	REMARKS
1B21-F411B	3	B	2	SO	E0 -RO	T2012/T2005					SRV (F041B)
	D-11	ACTIVE	TW	C	EC -RO	T2012/T2005					CONTROL VALVE
					STO-RO	T2012/T2005	N/A				Skid-Mounted
					STC-RO	T2012/T2005	N/A				Note 12
					FS -RO	T2012/T2005					
					PI -RO	T2012/T2005					
1B21-F412A	3	B	2	SO	E0 -RO	T2012/T2005					SRV (F041C)
	B-11	ACTIVE	TW	C	EC -RO	T2012/T2005					CONTROL VALVE
					STO-RO	T2012/T2005	N/A				Skid-Mounted
					STC-RO	T2012/T2005	N/A				Note 12
					FS -RO	T2012/T2005					
					PI -RO	T2012/T2005					
1B21-F412B	3	B	2	SO	E0 -RO	T2012/T2005					SRV (F041C)
	B-11	ACTIVE	TW	C	EC -RO	T2012/T2005					CONTROL VALVE
					STO-RO	T2012/T2005	N/A				Skid-Mounted
					STC-RO	T2012/T2005	N/A				Note 12
					FS -RO	T2012/T2005					
					PI -RO	T2012/T2005					
1B21-F413A	3	B	2	SO	E0 -RO	T2012/T2005					SRV (F041D)
	B-11	ACTIVE	TW	C	EC -RO	T2012/T2005					CONTROL VALVE
					STO-RO	T2012/T2005	N/A				Skid-Mounted
					STC-RO	T2012/T2005	N/A				Note 12
					FS -RO	T2012/T2005					
					PI -RO	T2012/T2005					
1B21-F413B	3	B	2	SO	E0 -RO	T2012/T2005					SRV (F041D)
	B-11	ACTIVE	TW	C	EC -RO	T2012/T2005					CONTROL VALVE
					STO-RO	T2012/T2005	N/A				Skid-Mounted
					STC-RO	T2012/T2005	N/A				Note 12
					FS -RO	T2012/T2005					
					PI -RO	T2012/T2005					

VALVE/ DEVICE NO.	CLASS AND DWG. COOR.	VALVE CATEGORY/ ACTIVE OR PASSIVE	SIZE (in.) AND TYPE	ACTUATOR TYPE/ NORMAL POSITION	TEST REQ. AND FREQ.	SURV INST. NO. SVI-B21	STROKE TIME REFERENCE VALUE(sec)	LEAKAGE LIMIT (sccm or gpm)	DEVICE SET PRESS. REFERENCE VALUE(psi)	JUSTIFI-CATIONS & RELIEF REQUEST NO.	REMARKS
1B21-F414A	3	B	2	SO	E0 -RO	T2012/T2005					SRV (F041E)
	D-11	ACTIVE	TW	C	EC -RO	T2012/T2005					CONTROL VALVE
					STO-RO	T2012/T2005	N/A				Skid-Mounted
					STC-RO	T2012/T2005	N/A				Note 12
					FS -RO	T2012/T2005					
					PI -RO	T2012/T2005					
1B21-F414B	3	B	2	SO	E0 -RO	T2012/T2005					SRV (F041E)
	D-11	ACTIVE	TW	C	EC -RO	T2012/T2005					CONTROL VALVE
					STO-RO	T2012/T2005	N/A				Skid-Mounted
					STC-RO	T2012/T2005	N/A				Note 12
					FS -RO	T2012/T2005					
					PI -RO	T2012/T2005					
1B21-F415A	3	B	2	SO	E0 -RO	T2012/T2005					SRV (F041F)
	D-11	ACTIVE	TW	C	EC -RO	T2012/T2005					CONTROL VALVE
					STO-RO	T2012/T2005	N/A				Skid-Mounted
					STC-RO	T2012/T2005	N/A				Note 12
					FS -RO	T2012/T2005					
					PI -RO	T2012/T2005					
1B21-F415B	3	B	2	SO	E0 -RO	T2012/T2005					SRV (F041F)
	D-11	ACTIVE	TW	C	EC -RO	T2012/T2005					CONTROL VALVE
					STO-RO	T2012/T2005	N/A				Skid-Mounted
					STC-RO	T2012/T2005	N/A				Note 12
					FS -RO	T2012/T2005					
					PI -RO	T2012/T2005					
1B21-F416A	3	B	2	SO	E0 -RO	T2012/T2005					SRV (F041G)
	B-11	ACTIVE	TW	C	EC -RO	T2012/T2005					CONTROL VALVE
					STO-RO	T2012/T2005	N/A				Skid-Mounted
					STC-RO	T2012/T2005	N/A				Note 12
					FS -RO	T2012/T2005					
					PI -RO	T2012/T2005					

VALVE/ DEVICE NO.	CLASS AND DWG. COOR.	VALVE CATEGORY/ ACTIVE OR PASSIVE	SIZE (in.) AND TYPE	ACTUATOR TYPE/ NORMAL POSITION	TEST REQ. AND FREQ.	SURV INST. NO. SVI-B21	STROKE TIME REFERENCE VALUE(sec)	LEAKAGE LIMIT (sccm or gpm)	DEVICE SET PRESS. REFERENCE VALUE(psi)	JUSTIFI-CATIONS & RELIEF REQUEST NO.	REMARKS
1B21-F416B	3	B	2	SO	E0 -RO	T2012/T2005					SRV (F041G)
	B-11	ACTIVE	TW	C	EC -RO	T2012/T2005					CONTROL VALVE
					STO-RO	T2012/T2005	N/A				Skid-Mounted
					STC-RO	T2012/T2005	N/A				Note 12
					FS -RO	T2012/T2005					
					PI -RO	T2012/T2005					
1B21-F417A	3	B	2	SO	E0 -RO	T2012/T2005					SRV (F041K)
	B-11	ACTIVE	TW	C	EC -RO	T2012/T2005					CONTROL VALVE
					STO-RO	T2012/T2005	N/A				Skid-Mounted
					STC-RO	T2012/T2005	N/A				Note 12
					FS -RO	T2012/T2005					
					PI -RO	T2012/T2005					
1B21-F417B	3	B	2	SO	E0 -RO	T2012/T2005					SRV (F041K)
	B-11	ACTIVE	TW	C	EC -RO	T2012/T2005					CONTROL VALVE
					STO-RO	T2012/T2005	N/A				Skid-Mounted
					STC-RO	T2012/T2005	N/A				Note 12
					FS -RO	T2012/T2005					
					PI -RO	T2012/T2005					
1B21-F420A	3	B	2	SO	E0 -RO	T2012/T2005					SRV (F047B)
	B-11	ACTIVE	TW	C	EC -RO	T2012/T2005					CONTROL VALVE
					STO-RO	T2012/T2005	N/A				Skid-Mounted
					STC-RO	T2012/T2005	N/A				Note 12
					FS -RO	T2012/T2005					
					PI -RO	T2012/T2005					
1B21-F420B	3	B	2	SO	E0 -RO	T2012/T2005					SRV (F047B)
	B-11	ACTIVE	TW	C	EC -RO	T2012/T2005					CONTROL VALVE
					STO-RO	T2012/T2005	N/A				Skid-Mounted
					STC-RO	T2012/T2005	N/A				Note 12
					FS -RO	T2012/T2005					
					PI -RO	T2012/T2005					

VALVE/ DEVICE NO.	CLASS AND DWG. COOR.	VALVE CATEGORY/ ACTIVE OR PASSIVE	SIZE (in.) AND TYPE	ACTUATOR TYPE/ NORMAL POSITION	TEST REQ. AND FREQ.	SURV INST. NO. SVI-B21	STROKE TIME REFERENCE VALUE(sec)	LEAKAGE LIMIT (sccm or gpm)	DEVICE SET PRESS. REFERENCE VALUE(psi)	JUSTIFI-CATIONS & RELIEF REQUEST NO.	REMARKS
1B21-F421A	3	B	2	SO	E0 -RO	T2012/T2005					SRV (F047C)
	B-11	ACTIVE	TW	C	EC -RO	T2012/T2005					CONTROL VALVE
					STO-RO	T2012/T2005	N/A				Skid-Mounted
					STC-RO	T2012/T2005	N/A				Note 12
					FS -RO	T2012/T2005					
					PI -RO	T2012/T2005					
1B21-F421B	3	B	2	SO	E0 -RO	T2012/T2005					SRV (F047C)
	B-11	ACTIVE	TW	C	EC -RO	T2012/T2005					CONTROL VALVE
					STO-RO	T2012/T2005	N/A				Skid-Mounted
					STC-RO	T2012/T2005	N/A				Note 12
					FS -RO	T2012/T2005					
					PI -RO	T2012/T2005					
1B21-F422A	3	B	2	SO	E0 -RO	T2012/T2005					SRV (F047D)
	D-11	ACTIVE	TW	C	EC -RO	T2012/T2005					CONTROL VALVE
					STO-RO	T2012/T2005	N/A				Skid-Mounted
					STC-RO	T2012/T2005	N/A				Note 12
					FS -RO	T2012/T2005					
					PI -RO	T2012/T2005					
1B21-F422B	3	B	2	SO	E0 -RO	T2012/T2005					SRV (F047D)
	D-11	ACTIVE	TW	C	EC -RO	T2012/T2005					CONTROL VALVE
					STO-RO	T2012/T2005	N/A				Skid-Mounted
					STC-RO	T2012/T2005	N/A				Note 12
					FS -RO	T2012/T2005					
					PI -RO	T2012/T2005					
1B21-F423A	3	B	2	SO	E0 -RO	T2012/T2005					SRV (F047F)
	B-11	ACTIVE	TW	C	EC -RO	T2012/T2005					CONTROL VALVE
					STO-RO	T2012/T2005	N/A				Skid-Mounted
					STC-RO	T2012/T2005	N/A				Note 12
					FS -RO	T2012/T2005					
					PI -RO	T2012/T2005					

VALVE/ DEVICE NO.	CLASS AND DWG. COOR.	VALVE CATEGORY/ ACTIVE OR PASSIVE	SIZE (in.) AND TYPE	ACTUATOR TYPE/ NORMAL POSITION	TEST REQ. AND FREQ.	SURV INST. NO. SVI-B21	STROKE TIME REFERENCE VALUE(sec)	LEAKAGE LIMIT (sccm or gpm)	DEVICE SET PRESS. REFERENCE VALUE(psi)	JUSTIFI-CATIONS & RELIEF REQUEST NO.	REMARKS
1B21-F423B	3	B	2	SO	E0 -RO	T2012/T2005					SRV (F047F)
	B-11	ACTIVE	TW	C	EC -RO	T2012/T2005					CONTROL VALVE
					STO-RO	T2012/T2005	N/A				Skid-Mounted
					STC-RO	T2012/T2005	N/A				Note 12
					FS -RO	T2012/T2005					
					PI -RO	T2012/T2005					
1B21-F424A	3	B	2	SO	E0 -RO	T2012/T2005					SRV (F047G)
	B-11	ACTIVE	TW	C	EC -RO	T2012/T2005					CONTROL VALVE
					STO-RO	T2012/T2005	N/A				Skid-Mounted
					STC-RO	T2012/T2005	N/A				Note 12
					FS -RO	T2012/T2005					
					PI -RO	T2012/T2005					
1B21-F424B	3	B	2	SO	E0 -RO	T2012/T2005					SRV (F047G)
	B-11	ACTIVE	TW	C	EC -RO	T2012/T2005					CONTROL VALVE
					STO-RO	T2012/T2005	N/A				Skid-Mounted
					STC-RO	T2012/T2005	N/A				Note 12
					FS -RO	T2012/T2005					
					PI -RO	T2012/T2005					
1B21-F425A	3	B	2	SO	E0 -RO	T2012/T2005					SRV (F047H)
	D-11	ACTIVE	TW	C	EC -RO	T2012/T2005					CONTROL VALVE
					STO-RO	T2012/T2005	N/A				Skid-Mounted
					STC-RO	T2012/T2005	N/A				Note 12
					FS -RO	T2012/T2005					
					PI -RO	T2012/T2005					
1B21-F425B	3	B	2	SO	E0 -RO	T2012/T2005					SRV (F047H)
	D-11	ACTIVE	TW	C	EC -RO	T2012/T2005					CONTROL VALVE
					STO-RO	T2012/T2005	N/A				Skid-Mounted
					STC-RO	T2012/T2005	N/A				Note 12
					FS -RO	T2012/T2005					
					PI -RO	T2012/T2005					

VALVE/ DEVICE NO.	CLASS AND DWG. COOR.	VALVE CATEGORY/ ACTIVE OR PASSIVE	SIZE (in.) AND TYPE	ACTUATOR TYPE/ NORMAL POSITION	TEST REQ. AND FREQ.	SURV INST. NO. SVI-B21	STROKE TIME REFERENCE VALUE(sec)	LEAKAGE LIMIT (sccm or gpm)	DEVICE SET PRESS. REFERENCE VALUE(psi)	JUSTIFI-CATIONS & RELIEF REQUEST NO.	REMARKS
1B21-F440A	3	B	2	SO	E0 -RO	T2012/T2005					SRV (F051A)
	B-11	ACTIVE	TW	C	EC -RO	T2012/T2005					CONTROL VALVE
					STO-RO	T2012/T2005	N/A				Skid-Mounted
					STC-RO	T2012/T2005	N/A				Note 12
					FS -RO	T2012/T2005					
					PI -RO	T2012/T2005					
1B21-F440B	3	B	2	SO	E0 -RO	T2012/T2005					SRV (F051A)
	B-11	ACTIVE	TW	C	EC -RO	T2012/T2005					CONTROL VALVE
					STO-RO	T2012/T2005	N/A				Skid-Mounted
					STC-RO	T2012/T2005	N/A				Note 12
					FS -RO	T2012/T2005					
					PI -RO	T2012/T2005					
1B21-F441A	3	B	2	SO	E0 -RO	T2012/T2005					SRV (F051B)
	B-11	ACTIVE	TW	C	EC -RO	T2012/T2005					CONTROL VALVE
					STO-RO	T2012/T2005	N/A				Skid-Mounted
					STC-RO	T2012/T2005	N/A				Note 12
					FS -RO	T2012/T2005					
					PI -RO	T2012/T2005					
1B21-F441B	3	B	2	SO	E0 -RO	T2012/T2005					SRV (F051B)
	B-11	ACTIVE	TW	C	EC -RO	T2012/T2005					CONTROL VALVE
					STO-RO	T2012/T2005	N/A				Skid-Mounted
					STC-RO	T2012/T2005	N/A				Note 12
					FS -RO	T2012/T2005					
					PI -RO	T2012/T2005					
1B21-F442A	3	B	2	SO	E0 -RO	T2012/T2005					SRV (F051C)
	D-11	ACTIVE	TW	C	EC -RO	T2012/T2005					CONTROL VALVE
					STO-RO	T2012/T2005	N/A				Skid-Mounted
					STC-RO	T2012/T2005	N/A				Note 12
					FS -RO	T2012/T2005					
					PI -RO	T2012/T2005					

VALVE/ DEVICE NO.	CLASS AND DWG. COOR.	VALVE CATEGORY/ ACTIVE OR PASSIVE	SIZE (in.) AND TYPE	ACTUATOR TYPE/ NORMAL POSITION	TEST REQ. AND FREQ.	SURV INST. NO. SVI-B21	STROKE TIME REFERENCE VALUE(sec)	LEAKAGE LIMIT (sccm or gpm)	DEVICE SET PRESS. REFERENCE VALUE(psi)	JUSTIFI-CATIONS & RELIEF REQUEST NO.	REMARKS
1B21-F442B	3	B	2	SO	E0 -RO	T2012/T2005					SRV (F051C)
	D-11	ACTIVE	TW	C	EC -RO	T2012/T2005					CONTROL VALVE
					STO-RO	T2012/T2005	N/A				Skid-Mounted
					STC-RO	T2012/T2005	N/A				Note 12
					FS -RO	T2012/T2005					
					PI -RO	T2012/T2005					
1B21-F443A	3	B	2	SO	E0 -RO	T2012/T2005					SRV (F051D)
	B-11	ACTIVE	TW	C	EC -RO	T2012/T2005					CONTROL VALVE
					STO-RO	T2012/T2005	N/A				Skid-Mounted
					STC-RO	T2012/T2005	N/A				Note 12
					FS -RO	T2012/T2005					
					PI -RO	T2012/T2005					
1B21-F443B	3	B	2	SO	E0 -RO	T2012/T2005					SRV (F051D)
	B-11	ACTIVE	TW	C	EC -RO	T2012/T2005					CONTROL VALVE
					STO-RO	T2012/T2005	N/A				Skid-Mounted
					STC-RO	T2012/T2005	N/A				Note 12
					FS -RO	T2012/T2005					
					PI -RO	T2012/T2005					
1B21-F444A	3	B	2	SO	E0 -RO	T2012/T2005					SRV (F051G)
	D-11	ACTIVE	TW	C	EC -RO	T2012/T2005					CONTROL VALVE
					STO-RO	T2012/T2005	N/A				Skid-Mounted
					STC-RO	T2012/T2005	N/A				Note 12
					FS -RO	T2012/T2005					
					PI -RO	T2012/T2005					
1B21-F444B	3	B	2	SO	E0 -RO	T2012/T2005					SRV (F051G)
	D-11	ACTIVE	TW	C	EC -RO	T2012/T2005					CONTROL VALVE
					STO-RO	T2012/T2005	N/A				Skid-Mounted
					STC-RO	T2012/T2005	N/A				Note 12
					FS -RO	T2012/T2005					
					PI -RO	T2012/T2005					

VALVE/ DEVICE NO.	CLASS AND DWG. COOR.	VALVE CATEGORY/ ACTIVE OR PASSIVE	SIZE (in.) AND TYPE	ACTUATOR TYPE/ NORMAL POSITION	TEST REQ. AND FREQ.	SURV INST. NO. SVI-B21	STROKE TIME REFERENCE VALUE(sec)	LEAKAGE LIMIT(sccm gpm or bubbles)	DEVICE SET PRESS. REFERENCE VALUE(psi)	JUSTIFI-CATIONS & RELIEF REQUEST NO.	REMARKS
1B21-R011A-F	2	AC	3/8	SE	E0 -RO	T2222				RO-20	RX INSTRUMENT
	C-3	ACTIVE	CH	O	EC -RO	T2222				RO-20	REFERENCE
					LD -2Y	T2222		0.0			LEG FILL
1B21-R011A-G	2	AC	3/8	SE	E0 -RO	T2222				RO-20	RX INSTRUMENT
	C-4	ACTIVE	CH	O	EC -RO	T2222				RO-20	REFERENCE
					LD -2Y	T2222		0.0			LEG FILL
1B21-R011B-F	2	AC	3/8	SE	E0 -RO	T2223				RO-20	RX INSTRUMENT
	F-3	ACTIVE	CH	O	EC -RO	T2223				RO-20	REFERENCE
					LD -2Y	T2223		0.0			LEG FILL
1B21-R011B-G	2	AC	3/8	SE	E0 -RO	T2223				RO-20	RX INSTRUMENT
	F-4	ACTIVE	CH	O	EC -RO	T2223				RO-20	REFERENCE
					LD -2Y	T2223		0.0			LEG FILL
1B21-R011C-F	2	AC	3/8	SE	E0 -RO	T2222				RO-20	RX INSTRUMENT
	J-12	ACTIVE	CH	O	EC -RO	T2222				RO-20	REFERENCE
					LD -2Y	T2222		0.0			LEG FILL
1B21-R011C-G	2	AC	3/8	SE	E0 -RO	T2222				RO-20	RX INSTRUMENT
	J-13	ACTIVE	CH	O	EC -RO	T2222				RO-20	REFERENCE
					LD -2Y	T2222		0.0			LEG FILL
1B21-R011D-F	2	AC	3/8	SE	E0 -RO	T2223				RO-20	RX INSTRUMENT
	J-8	ACTIVE	CH	O	EC -RO	T2223				RO-20	REFERENCE
					LD -2Y	T2223		0.0			LEG FILL
1B21-R011D-G	2	AC	3/8	SE	E0 -RO	T2223				RO-20	RX INSTRUMENT
	J-9	ACTIVE	CH	O	EC -RO	T2223				RO-20	REFERENCE
					LD -2Y	T2223		0.0			LEG FILL

SYSTEM: REACTOR WATER RECIRCULATION (B33) DWG. NO. D-302-602

VALVE/ DEVICE NO.	CLASS AND DWG. COOR.	VALVE CATEGORY/ ACTIVE OR PASSIVE	SIZE (in.) AND TYPE	ACTUATOR TYPE/ NORMAL POSITION	TEST REQ. AND FREQ.	SURV INST. NO. SVI-B33	STROKE TIME REFERENCE VALUE(sec)	LEAKAGE LIMIT(sccm gpm or bubbles)	DEVICE SET PRESS. REFERENCE VALUE(psi)	JUSTIFI-CATIONS & RELIEF REQUEST NO.	REMARKS
1B33-F019	2	B	3/4	AO	EC -Q	T2001					
	B-6	ACTIVE	DI	C	STC-Q	T2001	3.1*				
					FS -Q	T2001					
					PI -2Y	T2001					
1B33-F020	2	B	3/4	AO	EC -Q	T2001					
	B-4	ACTIVE	DI	C	STC-Q	T2001	3.2*				
					FS -Q	T2001					
					PI -2Y	T2001					

SYSTEM: CONTROL ROD DRIVE HYDRAULICS (C11) DWG. NO. D-302-871

VALVE/ DEVICE NO.	CLASS AND DWG. COOR.	VALVE CATEGORY/ ACTIVE OR PASSIVE	SIZE (in.) AND TYPE	ACTUATOR TYPE/ NORMAL POSITION	TEST REQ. AND FREQ.	SURV INST. NO. SVI-C11	STROKE TIME REFERENCE VALUE(sec)	LEAKAGE LIMIT(sccm gpm or bubbles)	DEVICE SET PRESS. REFERENCE VALUE(psi)	JUSTIFI-CATIONS & RELIEF REQUEST NO.	REMARKS
1C11-F010	2	B	1	AO	EC -Q	T2004					SUPPLEMENTAL
	D-11	ACTIVE	GL	O	STC-Q	T2004	12.7*				(PI) PTI-C11-
					FS -Q	T2004					P0007 AND
					PI -2Y	T2004					NOTE: 2
1C11-F011	2	B	2	AO	EC -Q	T2004					SUPPLEMENTAL
	F-11	ACTIVE	GL	O	STC-Q	T2004	19.4*				(PI) PTI-C11-
					FS -Q	T2004					P0007 AND
					PI -2Y	T2004					NOTE: 2
1C11-F083	2	A	2 1/2	MO	EC -CS	T2002				CS-6	
	H-4	ACTIVE	GT	O	STC-CS	T2002	9.0*			CS-6/VR-3	VR-
											Pending10296
					LJ -PB	T9204		1,000.0			
					PI -2Y	T2002				VR-3	
1C11-F180	2	B	1	AO	EC -Q	T2004					SUPPLEMENTAL
	D-12	ACTIVE	GL	O	STC-Q	T2004	25.2*				(PI) PTI-C11-
					FS -Q	T2004					P0007 AND
					PI -2Y	T2004					NOTE: 2
1C11-F181	2	B	2	AO	EC -Q	T2004					SUPPLEMENTAL
	F-12	ACTIVE	GL	O	STC-Q	T2004	26.1*				(PI) PTI-C11-
					FS -Q	T2004					P0007 AND
					PI -2Y	T2004					NOTE: 2

SYSTEM: CONTROL ROD DRIVE HYDRAULICS (C11) DWG. NO. D-302-872

VALVE/ DEVICE NO.	CLASS AND DWG. COOR.	VALVE CATEGORY/ ACTIVE OR PASSIVE	SIZE (in.) AND TYPE	ACTUATOR TYPE/ NORMAL POSITION	TEST REQ. AND FREQ.	SURV INST. NO. SVI-C11	STROKE TIME REFERENCE VALUE(sec)	LEAKAGE LIMIT(sccm gpm or bubbles)	DEVICE SET PRESS. REFERENCE VALUE(psi)	JUSTIFI-CATIONS & RELIEF REQUEST NO.	REMARKS
1C11-F122	2	AC	2 1/2	SE	EC -CVCM	T9204				RO-13	
	G-13	ACTIVE	CH	O	EO -RO	T1300-1 (ISI-B21)				RO-13	
					LJ-PB	T9204		1,000.0			
ASSEMBLY 1C11-114	2	C	3/4	SE	EO -RO	T1006				VR-1	TYPICAL OF 177 HCUs, SCRAM INSERTION TIME Skid Mounted Note 14
	C-4	ACTIVE	CH	C	EC -RO	N/A					
ASSEMBLY 1C11-115	2	B	3/4	SE	EO -RO	T1006				VR-1	TYPICAL OF 177 HCUs, SCRAM INSERTION TIME
	D-10	ACTIVE	CH	C	EC -RO	T2001				RO-31	
ASSEMBLY 1C11-120	2	B	3/4	SO	EO -W	T1003A(B)					TYPICAL OF 177 HCUs, ROUTINE ROD NOTCH
	C-7	ACTIVE	GT	C	EC -W	T1003A(B)					
					FS -W	T1003A(B)					
ASSEMBLY 1C11-121	2	B	3/4	SO	EO -W	T1003A(B)					TYPICAL OF 177 HCUs, ROUTINE ROD NOTCH
	C-6	ACTIVE	GT	C	EC -W	T1003A(B)					
					FS -W	T1003A(B)					
ASSEMBLY 1C11-122	2	B	3/4	SO	EO -W	T1003A(B)					TYPICAL OF 177 HCUs, ROUTINE ROD NOTCH
	C-6	ACTIVE	GT	C	EC -W	T1003A(B)					
					FS -W	T1003A(B)					
ASSEMBLY 1C11-123	2	B	3/4	SO	EO -W	T1003A(B)					TYPICAL OF 177 HCUs, ROUTINE ROD NOTCH
	C-7	ACTIVE	GT	C	EC -W	T1003A(B)					
					FS -W	T1003A(B)					

SYSTEM: CONTROL ROD DRIVE HYDRAULICS (C11) DWG. NO. D-302-872

VALVE/ DEVICE NO.	CLASS AND DWG. COOR.	VALVE CATEGORY/ ACTIVE OR PASSIVE	SIZE (in.) AND TYPE	ACTUATOR TYPE/ NORMAL POSITION	TEST REQ. AND FREQ.	SURV INST. NO. SVI-C11	STROKE TIME REFERENCE VALUE(sec)	LEAKAGE LIMIT(sccm gpm or bubbles)	DEVICE SET PRESS. REFERENCE VALUE(psi)	JUSTIFI-CATIONS & RELIEF REQUEST NO.	REMARKS
ASSEMBLY	2	B	1/2	AO	EO -RO	T1006				VR-1	TYPICAL OF 177
1C11-126	C-9	ACTIVE	GL	C	ST0-RO	T1006	N/A			VR-1	HCUs, SCRAM
					FS -RO	T1006				VR-1	INSERTION TIME
ASSEMBLY	2	B	3/4	AO	EO -RO	T1006				VR-1	TYPICAL OF 177
1C11-127	B-5	ACTIVE	GL	C	ST0-RO	T1006	N/A			VR-1	HCUs, SCRAM
					FS -RO	T1006				VR-1	INSERTION TIME
ASSEMBLY	2	C	1/2	SE	EO -Q	T2001(GEN)					TYPICAL OF 177
1C11-138	D-8	ACTIVE	CH	O	EC -W	T1003A(B)					HCUs, ROUTINE
											ROD NOTCH

SYSTEM: STANDBY LIQUID CONTROL (C41) DWG. NO. D-302-691

VALVE/ DEVICE NO.	CLASS AND DWG. COOR.	VALVE CATEGORY/ ACTIVE OR PASSIVE	SIZE (in.) AND TYPE	ACTUATOR TYPE/ NORMAL POSITION	TEST REQ. AND FREQ.	SURV INST. NO. SVI-C41	STROKE TIME REFERENCE VALUE(sec)	LEAKAGE LIMIT(sccm gpm or bubbles)	DEVICE SET PRESS. REFERENCE VALUE(psi)	JUSTIFI-CATIONS & RELIEF REQUEST NO.	REMARKS
1C41-F001A	2	B	4	MO	EO -Q	T2001A					
	D-6	ACTIVE	GL	C	STO-Q	T2001A	15*			VR-3	VR-Pending 6276
					PI -2Y	T2001A				VR-3	
1C41-F001B	2	B	4	MO	EO -Q	T2001B					
	F-6	ACTIVE	GL	C	STO-Q	T2001B	16*			VR-3	VR-Pending 12650
					PI -2Y	T2001B				VR-3	
1C41-F004A	2	D	1 1/2	EX	EX -10YE	T2002					
	D-12	ACTIVE	SQ	C							
1C41-F004B	2	D	1 1/2	EX	EX -10YE	T2002					
	G-11	ACTIVE	SQ	C							
1C41-F006	1	AC	1 1/2	SE	EO -RO	T2002				RO-10	
	F-13	ACTIVE	CH	C	EC -RO	T2200				RO-10	
					LK -2Y	T2200		0.75			
1C41-F007	1	AC	1 1/2	SE	EO -RO	T2002				RO-10	
	F-13	ACTIVE	CH	C	EC -RO	T2200				RO-10	
					LK -2Y	T2200		0.75			
1C41-F029A	2	C	1 1/2	SE	RT -10Y	T2100(GEN)			1,400.0		5.0 psi BACK PRESSURE
	D-9	ACTIVE	RE	C							
1C41-F029B	2	C	1 1/2	SE	RT -10Y	T2100(GEN)			1,400.0		5.0 psi BACK PRESSURE
	F-9	ACTIVE	RE	C							

SYSTEM: STANDBY LIQUID CONTROL (C41) DWG. NO. D-302-691

VALVE/ DEVICE NO.	CLASS AND DWG. COOR.	VALVE CATEGORY/ ACTIVE OR PASSIVE	SIZE (in.) AND TYPE	ACTUATOR TYPE/ NORMAL POSITION	TEST REQ. AND FREQ.	SURV INST. NO. SVI-C41	STROKE TIME REFERENCE VALUE(sec)	LEAKAGE LIMIT(sccm gpm or bubbles)	DEVICE SET PRESS. REFERENCE VALUE(psi)	JUSTIFI-CATIONS & RELIEF REQUEST NO.	REMARKS
1C41-F033A	2	AC	1 1/2	SE	EO -Q	T2001A					
	D-10	ACTIVE	CH	C	EC -RO	T2201				RO-16	
					LD -2Y	T2201		1.0			
1C41-F033B	2	AC	1 1/2	SE	EO -Q	T2001B					
	F-10	ACTIVE	CH	C	EC -RO	T2201				RO-16	
					LD -2Y	T2201		1.0			
1C41-F036	1	B	1 1/2	MA	PI -2Y	T2200					MAINTENANCE
	F-14	PASSIVE	GT	LO							ONLY

SYSTEM: STANDBY LIQUID CONTROL TRANSFER (C41) DWG. NO. D-302-692

VALVE/ DEVICE NO.	CLASS AND DWG. COOR.	VALVE CATEGORY/ ACTIVE OR PASSIVE	SIZE (in.) AND TYPE	ACTUATOR TYPE/ NORMAL POSITION	TEST REQ. AND FREQ.	SURV INST. NO. SVI-C41	STROKE TIME REFERENCE VALUE(sec)	LEAKAGE LIMIT(sccm gpm or bubbles)	DEVICE SET PRESS. REFERENCE VALUE(psi)	JUSTIFI-CATIONS & RELIEF REQUEST NO.	REMARKS
C41-F511A	O3	B	3/4	MA	EO -RO	P0001 (PTI)					OPTIONAL (ISI)
	F-6	ACTIVE	GL	C	EC -RO	P0001 (PTI)					SYSTEM
C41-F511B	O3	B	3/4	MA	EO -RO	P0001 (PTI)					OPTIONAL (ISI)
	F-9	ACTIVE	GL	C	EC -RO	P0001 (PTI)					SYSTEM
C41-F513A	O3	C	2	SE	EO -RO	P0001 (PTI)					OPTIONAL (ISI)
	G-7	ACTIVE	CH	C	EC -RO	P0001 (PTI)					SYSTEM
C41-F513B	O3	C	2	SE	EO -RO	P0001 (PTI)					OPTIONAL (ISI)
	G-9	ACTIVE	CH	C	EC -RO	P0001 (PTI)					SYSTEM
C41-F514A	O3	B	2	MA	EO -RO	P0001 (PTI)					OPTIONAL (ISI)
	H-7	ACTIVE	GL	C	EC -RO	P0001 (PTI)					SYSTEM
C41-F514B	O3	B	2	MA	EO -RO	P0001 (PTI)					OPTIONAL (ISI)
	H-9	ACTIVE	GL	C	EC -RO	P0001 (PTI)					SYSTEM
C41-F515	O3	B	2	MA	EO -RO	P0001 (PTI)					OPTIONAL (ISI)
	H-8	ACTIVE	GL	C	EC -RO	P0001 (PTI)					SYSTEM
C41-F516A	O3	B	2	MA	EO -RO	P0001 (PTI)					OPTIONAL (ISI)
	G-6	ACTIVE	GL	C	EC -RO	P0001 (PTI)					SYSTEM
C41-F516B	O3	B	2	MA	EO -RO	P0001 (PTI)					OPTIONAL (ISI)
	H-8	ACTIVE	GL	C	EC -RO	P0001 (PTI)					SYSTEM
1C41-F518	2	A	2	MA	N/A	N/A					VERIFICATION
	H-5	PASSIVE	GL	LC	N/A	N/A					OPEN PTI-C41-
					LJ -PB	T9315		1,000.0			P0001

SYSTEM: STANDBY LIQUID CONTROL TRANSFER (C41) DWG. NO. D-302-692

VALVE/ DEVICE NO.	CLASS AND DWG. COOR.	VALVE CATEGORY/ ACTIVE OR PASSIVE	SIZE (in.) AND TYPE	ACTUATOR TYPE/ NORMAL POSITION	TEST REQ. AND FREQ.	SURV INST. NO. SVI-C41	STROKE TIME REFERENCE VALUE(sec)	LEAKAGE LIMIT(sccm gpm or bubbles)	DEVICE SET PRESS. REFERENCE VALUE(psi)	JUSTIFI-CATIONS & RELIEF REQUEST NO.	REMARKS
1C41-F520	2	AC	2	SE	EO -RO	T2005 (GEN)					VERIFICATION
	H-4	PASSIVE	CH	C	EC -PB	T9315					OPEN PTI-C41-
					LJ -PB	T9315		1,000.0			P0001
1C41-F527	O3	B	2	MA	EO -RO	P0001 (PTI)					OPTIONAL
											(ISI)
	J-6	ACTIVE	GL	C	EC -RO	P0001 (PTI)					SYSTEM
C41-F529A	O3	C	1	SE	RT -10Y	T2100 (GEN)			39.0		OPTIONAL
											(ISI)
	G-7	ACTIVE	RE	C							SYSTEM
C41-F529B	O3	C	1	SE	RT -10Y	T2100 (GEN)			39.0		OPTIONAL
											(ISI)
	G-10	ACTIVE	RE	C							SYSTEM
C41-F542A	O3	C	3/4	SE	N/A	N/A					VERIFICATION
	D-5	ACTIVE	CH	C	N/A	N/A					OPEN PTI-C41-
											P0001
C41-F542B	O3	C	3/4	SE	N/A	N/A					VERIFICATION
	D-8	ACTIVE	CH	C	N/A	N/A					OPEN PTI-C41-
											P0001

SYSTEM: PLANT RADIATION MONITORING (D17) DWG. NO. D-806-004

VALVE/ DEVICE NO.	CLASS AND DWG. COOR.	VALVE CATEGORY/ ACTIVE OR PASSIVE	SIZE (in.) AND TYPE	ACTUATOR TYPE/ NORMAL POSITION	TEST REQ. AND FREQ.	SURV INST. NO. SVI-D17	STROKE TIME REFERENCE VALUE(sec)	LEAKAGE LIMIT(sccm gpm or bubbles)	DEVICE SET PRESS. REFERENCE VALUE(psi)	JUSTIFI-CATIONS & RELIEF REQUEST NO.	REMARKS
1D17-F071A	2	A	1	HO	EC -Q	T2001					SPRING TO
	B-13	ACTIVE	BA	O	STC-Q	T2001	2.0*				CLOSE, ON
					FS -Q	T2001					LOSS OF POWER
					LJ -PB	T9201		1,000.0			
					PI -2Y	T2001					
1D17-F071B	2	A	1	HO	EC -Q	T2001					SPRING TO
	B-14	ACTIVE	BA	O	STC-Q	T2001	2.0*				CLOSE, ON
					FS -Q	T2001					LOSS OF POWER
					LJ -PB	T9201		1,000.0			
					PI -2Y	T2001					
1D17-F079A	2	A	1	SO	EC -Q	T2001					SOLENOID TO
	B-11	ACTIVE	GL	O	STC-Q	T2001	2.0*				OPEN, SOLENOID
					LJ -PB	T9201		1,000.0			TO CLOSE
					PI -2Y	T9201/T2003					
1D17-F079B	2	A	1	SO	EC -Q	T2001					SOLENOID TO
	B-11	ACTIVE	GL	O	STC-Q	T2001	2.0*				OPEN, SOLENOID
					LJ -PB	T9201		1,000.0			TO CLOSE
					PI -2Y	T9201/T2003					

SYSTEM: PLANT RADIATION MONITORING (D17) DWG. NO. D-806-007

VALVE/ DEVICE NO.	CLASS AND DWG. COOR.	VALVE CATEGORY/ ACTIVE OR PASSIVE	SIZE (in.) AND TYPE	ACTUATOR TYPE/ NORMAL POSITION	TEST REQ. AND FREQ.	SURV INST. NO. SVI-D17	STROKE TIME REFERENCE VALUE(sec)	LEAKAGE LIMIT(sccm gpm or bubbles)	DEVICE SET PRESS. REFERENCE VALUE(psi)	JUSTIFI-CATIONS & RELIEF REQUEST NO.	REMARKS
1D17-F081A	2	A	1	HO	EC -Q	T2001					SPRING TO
	B-13	ACTIVE	BA	O	STC-Q	T2001	2.0*				CLOSE, ON
					FS -Q	T2001					LOSS OF POWER
					LJ -PB	T8317		1,000.0			
					PI -2Y	T2001					
1D17-F081B	2	A	1	HO	EC -Q	T2001					SPRING TO
	B-13	ACTIVE	BA	O	STC-Q	T2001	2.0*				CLOSE, ON
					FS -Q	T2001					LOSS OF POWER
					LJ -PB	T8317		1,000.0			
					PI -2Y	T2001					
1D17-F089A	2	A	1	SO	EC -Q	T2001					SOLENOID TO
	B-11	ACTIVE	GL	O	STC-Q	T2001	2.0*				OPEN, SOLENOID
					LJ -PB	T8317		1,000.0			TO CLOSE
					PI -2Y	T8317/T2003					
1D17-F089B	2	A	1	SO	EC -Q	T2001					SOLENOID TO
	B-10	ACTIVE	GL	O	STC-Q	T2001	2.0*				OPEN, SOLENOID
					LJ -PB	T8317		1,000.0			TO CLOSE
					PI -2Y	T8317/T2003					

SYSTEM: CONTAINMENT ATMOSPHERE MONITORING (D23) DWG. NO. D-302-881

VALVE/ DEVICE NO.	CLASS AND DWG. COOR.	VALVE CATEGORY/ ACTIVE OR PASSIVE	SIZE (in.) AND TYPE	ACTUATOR TYPE/ NORMAL POSITION	TEST REQ. AND FREQ.	SURV INST. NO. SVI-D23	STROKE TIME REFERENCE VALUE(sec)	LEAKAGE LIMIT(sccm gpm or bubbles)	DEVICE SET PRESS. REFERENCE VALUE(psi)	JUSTIFI-CATIONS & RELIEF REQUEST NO.	REMARKS
1D23-F010A	2	A	3/4	SO	EC -CS	T2001				CS-10	CONTAINMENT
	B-4	ACTIVE	GL	O	STC-CS	T2001	2.0*			CS-10	INSTRUMENT
					FS -CS	T2001				CS-10	LINE
					LD -2Y	T2002A		1,000.0			
					PI -2Y	T2002A					
1D23-F010B	2	A	3/4	SO	EC -CS	T2001				CS-10	CONTAINMENT
	B-11	ACTIVE	GL	O	STC-CS	T2001	2.0*			CS-10	INSTRUMENT
					FS -CS	T2001				CS-10	LINE
					LD -2Y	T2002B		1,000.0			
					PI -2Y	T2002B					
1D23-F020A	2	A	3/4	SO	EC -CS	T2001				CS-10	CONTAINMENT
	C-4	ACTIVE	GL	O	STC-CS	T2001	2.0*			CS-10	INSTRUMENT
					FS -CS	T2001				CS-10	LINE
					LD -2Y	T2002A		1,000.0			
					PI -2Y	T2002A					
1D23-F020B	2	A	3/4	SO	EC -CS	T2001				CS-10	CONTAINMENT
	C-11	ACTIVE	GL	O	STC-CS	T2001	2.0*			CS-10	INSTRUMENT
					FS -CS	T2001				CS-10	LINE
					LD -2Y	T2002B		1,000.0			
					PI -2Y	T2002B					
1D23-F030A	2	A	3/4	SO	EC -CS	T2001				CS-10	CONTAINMENT
	F-4	ACTIVE	GL	O	STC-CS	T2001	2.0*			CS-10	INSTRUMENT
					FS -CS	T2001				CS-10	LINE
					LD -2Y	T2002A		1,000.0			
					PI -2Y	T2002A					

VALVE/ DEVICE NO.	CLASS AND DWG. COOR.	VALVE CATEGORY/ ACTIVE OR PASSIVE	SIZE (in.) AND TYPE	ACTUATOR TYPE/ NORMAL POSITION	TEST REQ. AND FREQ.	SURV INST. NO. SVI-D23	STROKE TIME REFERENCE VALUE(sec)	LEAKAGE LIMIT(sccm gpm or bubbles)	DEVICE SET PRESS. REFERENCE VALUE(psi)	JUSTIFI-CATIONS & RELIEF REQUEST NO.	REMARKS
1D23-F030B	2	A	3/4	SO	EC -CS	T2001				CS-10	CONTAINMENT
	F-11	ACTIVE	GL	O	STC-CS	T2001	2.0*			CS-10	INSTRUMENT
					FS -CS	T2001				CS-10	LINE
					LD -2Y	T2002B		1,000.0			
					PI -2Y	T2002B					
1D23-F040A	2	A	3/4	SO	EC -CS	T2001				CS-10	CONTAINMENT
	F-4	ACTIVE	GL	O	STC-CS	T2001	2.0*			CS-10	INSTRUMENT
					FS -CS	T2001				CS-10	LINE
					LD -2Y	T2002A		1,000.0			
					PI -2Y	T2002A					
1D23-F040B	2	A	3/4	SO	EC -CS	T2001				CS-10	CONTAINMENT
	F-11	ACTIVE	GL	O	STC-CS	T2001	2.0*			CS-10	INSTRUMENT
					FS -CS	T2001				CS-10	LINE
					LD -2Y	T2002B		1,000.0			
					PI -2Y	T2002B					
1D23-F050	2	A	3/4	SO	EC -CS	T2001				CS-10	CONTAINMENT
	B-4	ACTIVE	GL	O	STC-CS	T2001	2.0*			CS-10	INSTRUMENT
					FS -CS	T2001				CS-10	LINE
					LD -2Y	T2002C		1,000.0			
					PI -2Y	T2002C					

SYSTEM: RESIDUAL HEAT REMOVAL (E12) DWG. NO. D-302-641

VALVE/ DEVICE NO.	CLASS AND DWG. COOR.	VALVE CATEGORY/ ACTIVE OR PASSIVE	SIZE (in.) AND TYPE	ACTUATOR TYPE/ NORMAL POSITION	TEST REQ. AND FREQ.	SURV INST. NO. SVI-E12	STROKE TIME REFERENCE VALUE(sec)	LEAKAGE LIMIT(sccm gpm or bubbles)	DEVICE SET PRESS. REFERENCE VALUE(psi)	JUSTIFI-CATIONS & RELIEF REQUEST NO.	REMARKS
1E12-F003A	2	B	18	MO	EO -Q	T2001					SVI-C61-T1201
	D-12	ACTIVE	GL	O	EC -Q	T2001					REMOTE S/D
					STO-Q	T2001	56.0*			VR-3	PANEL
					STC-Q	T2001	55.6*			VR-3	
					PI -2Y	T2001				VR-3	VR-Pending 23104
1E12-F011A	2	A	4	MO	EO -Q	T2001					SVI-C61-T1201
	C-10	ACTIVE	GL	C	EC -Q	T2001					REMOTE S/D
					STO-Q	T2001	29.9*				PANEL
					STC-Q	T2001	29.2*				
					LW -PB	T9105		5.0			
					PI -2Y	T2001					
1E12-F024A	2	A	18	MO	EO -Q	T2001					SVI-C61-T1201
	F-4	ACTIVE	GL	C	EC -Q	T2001					REMOTE S/D
					STO-Q	T2001	96.0			VR-3	PANEL
					STC-Q	T2001	95.0			VR-3	
					LW -PB	T9105		5.0			
					PI -2Y	T2001				VR-3	VR-Pending 40316
1E12-F025A	2	AC	1	SE	RT -10Y	T2100 (GEN)			485.0		
	C-5	ACTIVE	RE	C	LJ -PB	T9107		1386.0			

VALVE/ DEVICE NO.	CLASS AND DWG. COOR.	VALVE CATEGORY/ ACTIVE OR PASSIVE	SIZE (in.) AND TYPE	ACTUATOR TYPE/ NORMAL POSITION	TEST REQ. AND FREQ.	SURV INST. NO. SVI-E12	STROKE TIME REFERENCE VALUE(sec)	LEAKAGE LIMIT(sccm gpm or bubbles)	DEVICE SET PRESS. REFERENCE VALUE(psi)	JUSTIFI-CATIONS & RELIEF REQUEST NO.	REMARKS
1E12-F031A	2	C	18	SE	EO -Q	T2001					
	K-7	ACTIVE	CH	C	EC -Q	T2001					
1E12-F040	2	B	8	MO	EO -Q	T2001					SVI-C61-T1201
	F-7	ACTIVE	GL	C	EC -Q	T2001					REMOTE S/D
					STO-Q	T2001	17.0*				PANEL
					STC-Q	T2001	17.0*				
					PI -2Y	T2001					
1E12-F046A	2	C	6	SE	EO -Q	T2001					
	G-6	ACTIVE	CH	C	EC -Q	T2001					
1E12-F047A	2	B	18	MO	EO -Q	T2001					SVI-C61-T1201
	F-10	ACTIVE	GT	O	EC -Q	T2001					REMOTE S/D
					STO-Q	T2001	85.0*				PANEL
					STC-Q	T2001	85.0*				
					PI -2Y	T2001					
1E12-F048A	2	B	18	MO	EO -Q	T2001					SVI-C61-T1201
	E-7	ACTIVE	GL	O	EC -Q	T2001					REMOTE S/D
					STO-Q	T2001	75.0*			VR-3	PANEL
					STC-Q	T2001	73.0*			VR-3	
					PI -2Y	T2001				VR-3	VR-Pending 26029
1E12-F049	2	B	8	MO	EO -Q	T2001					
	E-7	ACTIVE	GT	C	EC -Q	T2001					
					STO-Q	T2001	41.2*				
					STC-Q	T2001	40.8*				
					PI -2Y	T2001					

SYSTEM: RESIDUAL HEAT REMOVAL (E12) DWG. NO. D-302-641

VALVE/ DEVICE NO.	CLASS AND DWG. COOR.	VALVE CATEGORY/ ACTIVE OR PASSIVE	SIZE (in.) AND TYPE	ACTUATOR TYPE/ NORMAL POSITION	TEST REQ. AND FREQ.	SURV INST. NO. SVI-E12	STROKE TIME REFERENCE VALUE(sec)	LEAKAGE LIMIT(sccm gpm or bubbles)	DEVICE SET PRESS. REFERENCE VALUE(psi)	JUSTIFI-CATIONS & RELIEF REQUEST NO.	REMARKS
1E12-F055A	2	AC	4	SE	RT -10Y	T2100 (GEN)			485.0		
	E-9	ACTIVE	RE	C	LJ -PB	T9107		1386.00			
1E12-F060A	2	B	3/4	SO	EO -Q	T2001					
	E-13	ACTIVE	GL	C	EC -Q	T2001					
					STO-Q	T2001	2.0*				
					STC-Q	T2001	2.0*				
					FS-Q	T2001					
					PI -2Y	T2017					
1E12-F064A	2	A	6	MO	EO -Q	T2001					SVI-C61-T1201
	H-6	ACTIVE	GT	O	EC -Q	T2001					REMOTE S/D
					STO-Q	T2001	12.0			VR-3	PANEL
					STC-Q	T2001	12.0			VR-3	
					LW -PB	T9105/T8105		3.0			
					PI -2Y	T2001				VR-3	VR-Pending 46229
1E12-F073A	2	A	1	MO	EO -Q	T2001					
	F-9	ACTIVE	GL	C	EC -Q	T2001					
					STO-Q	T2001	9.0*				
					STC-Q	T2001	9.0*				
					LJ -2Y	T9118		1,000.0			
					PI -2Y	T2001					
1E12-F074A	2	B	1	MO	EO -Q	T2001					
	G-9	ACTIVE	GL	C	EC -Q	T2001					
					STO-Q	T2001	8.3				
					STC-Q	T2001	7.7				
					PI -2Y	T2001					

SYSTEM: RESIDUAL HEAT REMOVAL (E12) DWG. NO. D-302-641

VALVE/ DEVICE NO.	CLASS AND DWG. COOR.	VALVE CATEGORY/ ACTIVE OR PASSIVE	SIZE (in.) AND TYPE	ACTUATOR TYPE/ NORMAL POSITION	TEST REQ. AND FREQ.	SURV INST. NO. SVI-E12	STROKE TIME REFERENCE VALUE(sec)	LEAKAGE LIMIT(sccm gpm or bubbles)	DEVICE SET PRESS. REFERENCE VALUE(psi)	JUSTIFI-CATIONS & RELIEF REQUEST NO.	REMARKS
1E12-F075A	2	B	3/4	SO	EO -Q	T2001					
	E-14	ACTIVE	GL	C	EC -Q	T2001					
					STO-Q	T2001	2.0*				
					STC-Q	T2001	2.0*				
					FS -Q	T2001					
					PI -2Y	T2017					
1E12-F084A	2	C	1 1/2	SE	EO -CVCM	T2004 (E21)				RO-32	
	J-7	ACTIVE	CH	C	EC -CVCM	T2000 (GEN)				RO-33	
1E12-F085A	2	C	1 1/2	SE	EO -RO	T2004 (E21)				RO-32	CLOSED USING
	J-7	ACTIVE	SC	C	EC -Q	T2001					HANDWHEEL
1E12-F552A	2	C	10	SE	EO -Q	T2002 (G42)					CLOSE USING
	C-4	ACTIVE	SC	LC	EC -Q	T2002 (G42)					HANDWHEEL
1E12-F609	2	A	6	MO	EO -Q	T2001					SVI-C61-T1201
	F-3	ACTIVE	GT	C	EC -Q	T2001					REMOTE S/D
					STO-Q	T2001	27.0*			VR-3	PANEL
					STC-Q	T2001	27.0*			VR-3	
					LW -PB	T9105		5.0			
					PI -2Y	T2001				VR-3	VR-Pending 22987
1E12-F610	2	A	6	MO	EO -Q	T2001					
	E-3	ACTIVE	GT	C	EC -Q	T2001					
					STO-Q	T2001	27.0*			VR-3	
					STC-Q	T2001	27.0*			VR-3	
					LW -PB	T9105		5.0			
					PI -2Y	T2001				VR-3	VR-Pending 12586

SYSTEM: RESIDUAL HEAT REMOVAL (E12) DWG. NO. D-302-642

VALVE/ DEVICE NO.	CLASS AND DWG. COOR.	VALVE CATEGORY/ ACTIVE OR PASSIVE	SIZE (in.) AND TYPE	ACTUATOR TYPE/ NORMAL POSITION	TEST REQ. AND FREQ.	SURV INST. NO. SVI-E12	STROKE TIME REFERENCE VALUE(sec)	LEAKAGE LIMIT(sccm gpm or bubbles)	DEVICE SET PRESS. REFERENCE VALUE(psi)	JUSTIFI-CATIONS & RELIEF REQUEST NO.	REMARKS
1E12-F004A	2	A	24	MO	EO -Q	T2001					SVI-C61-T1201
	H-12	ACTIVE	GT	O	EC -Q	T2001					REMOTE S/D
					STO-Q	T2001	115.5*			VR-3	PANEL
					STC-Q	T2001	112.5*			VR-3	
					LW -PB	T9102		5.0			
					PI -2Y	T2001				VR-3	VR-Pending 13650
1E12-F004B	2	A	24	MO	EO -Q	T2002					SVI-C61-T1202
	H-5	ACTIVE	GT	O	EC -Q	T2002					REMOTE S/D
					STO-Q	T2002	115.0*			VR-3	LOCAL BREAKER
					STC-Q	T2002	115.0*			VR-3	
					LW -PB	T9402		5.0			
					PI -2Y	T2002				VR-3	VR-Pending 12816
1E12-F005	2	AC	1	SE	RT -10Y	T2100 (GEN)			185.0		
	J-9	ACTIVE	RE	C	LJ -PB	T9429		1386.0			
1E12-F006A	2	B	18	MO	EO -Q	T2001					SVI-C61-T1201
	J-13	ACTIVE	GT	C	EC -Q	T2001					REMOTE S/D
					STO-Q	T2001	84.1*				PANEL
					STC-Q	T2001	82.9*				
					PI -2Y	T2001					
1E12-F006B	2	B	18	MO	EO -Q	T2002					SVI-C61-T1200
	J-4	ACTIVE	GT	C	EC -Q	T2002					REMOTE S/D
					STO-Q	T2002	83.0*				PANEL
					STC-Q	T2002	83.0*				
					PI -2Y	T2002					

VALVE/ DEVICE NO.	CLASS AND DWG. COOR.	VALVE CATEGORY/ ACTIVE OR PASSIVE	SIZE (in.) AND TYPE	ACTUATOR TYPE/ NORMAL POSITION	TEST REQ. AND FREQ.	SURV INST. NO. SVI-E12	STROKE TIME REFERENCE VALUE(sec)	LEAKAGE LIMIT(sccm gpm or bubbles)	DEVICE SET PRESS. REFERENCE VALUE(psi)	JUSTIFI-CATIONS & RELIEF REQUEST NO.	REMARKS
1E12-F008	1	A	20	MO	EO -Q	T2022				CS-3	SVI-C61-T1201
	G-12	ACTIVE	GT	C	EC -Q	T2022				CS-3	REMOTE S/D
					STO-Q	T2022	30.4*			CS-3/VR-3	PANEL
					STC-Q	T2022	30.2*			CS-3/VR-3	INTERSYSTEM
					LJ -PB	T9421		4159.0			LEAKAGE LIMIT
					LK -2Y	T2200		5.0			OF 0.3 GPM
					PI -2Y	T2022				VR-3	VR-Pending
											16841
1E12-F009	1	A	20	MO	EO -Q	T2022				CS-3	SVI-C61-T1200
	G-10	ACTIVE	GT	C	EC -Q	T2022				CS-3	REMOTE S/D
					STO-Q	T2022	29.4*			CS-3/VR-3	PANEL
					STC-Q	T2022	28.8*			CS-3/VR-3	INTERSYSTEM
					LJ -PB	T9421		12,000.0			LEAKAGE LIMIT
					LK -2Y	T2200		5.0			OF 0.3 GPM
					PI -2Y	T2022				VR-3	VR-Pending
											16843
1E12-F010	1	B	20	MA	PI -2Y	T2200					MAINTENANCE
	G-10	PASSIVE	GT	O							ONLY
1E12-F017A	2	C	1	SE	RT -10Y	T2100 (GEN)		5 dpm	200.0		LOC PROGRAM
	J-12	ACTIVE	RE	C							
1E12-F017B	2	C	1	SE	RT -10Y	T2100 (GEN)		5 dpm	200.0		LOC PROGRAM
	H-4	ACTIVE	RE	C							
1E12-F017C	2	C	1	SE	RT -10Y	T2100 (GEN)		5 dpm	200.0		LOC PROGRAM
	G-4	ACTIVE	RE	C							
1E12-F019	1	AC	6	SE	EO -CS	T2016 OR				CS-12	
						E51-T2010					
	B-13	ACTIVE	CH	C	EC -RO	T2202				RO-12	
					LK -2Y	T2202		3.0			

SYSTEM: RESIDUAL HEAT REMOVAL (E12) DWG. NO. D-302-642

VALVE/ DEVICE NO.	CLASS AND DWG. COOR.	VALVE CATEGORY/ ACTIVE OR PASSIVE	SIZE (in.) AND TYPE	ACTUATOR TYPE/ NORMAL POSITION	TEST REQ. AND FREQ.	SURV INST. NO. SVI-E12	STROKE TIME REFERENCE VALUE(sec)	LEAKAGE LIMIT(sccm gpm or bubbles)	DEVICE SET PRESS. REFERENCE VALUE(psi)	JUSTIFI-CATIONS & RELIEF REQUEST NO.	REMARKS
1E12-F023	1	A	6	MO	EO -CS	T2004A				CS-3	SVI-C61-T1201
	C-13	ACTIVE	GL	C	EC -CS	T2004A				CS-3	REMOTE S/D
					STO-CS	T2004A	32.1*			CS-3	PANEL
					STC-CS	T2004A	30.6*			CS-3	
					LJ -PB	T9123 (E51)		1386.0			
					LK -2Y	T2202		3.0/0.036			NOTE 10
					PI -2Y	T2004A					
1E12-F025C	2	AC	1	SE	RT -10Y	T2100 (GEN)			485.0		
	C-3	ACTIVE	RE	C	LJ -PB	T9429		1386.0			
1E12-F027A	2	A	12	MO	EO -Q	T2001					SVI-C61-T1201
	D-12	ACTIVE	GT	0	EC -Q	T2001					REMOTE S/D
					STO-Q	T2001	52.9*			VR-3	PANEL
					STC-Q	T2001	51.7*			VR-3	
					LJ -PB	T9113		2773.0			
					PI -2Y	T2001				VR-3	VR-Pending 10841
1E12-F027B	2	A	12	MO	EO -Q	T2002					SVI-C61-T1202
	E-4	ACTIVE	GT	0	EC -Q	T2002					REMOTE S/D
					STO-Q	T2002	52.0*			VR-3	LOCAL BREAKER
					STC-Q	T2002	51.0*			VR-3	
					LJ -PB	T9412		2773.0			
					PI -2Y	T2002				VR-3	VR-Pending 16078
1E12-F028A	2	A	12	MO	EO -Q	T2001					SVI-C61-T1201
	A-10	ACTIVE	GT	C	EC -Q	T2001					REMOTE S/D
					STO-Q	T2001	76.8*			VR-3	PANEL
					STC-Q	T2001	74.7*			VR-3	
					LJ -PB	T9113		2773.0			
					PI -2Y	T2001				VR-3	VR-Pending 16223

VALVE/ DEVICE NO.	CLASS AND DWG. COOR.	VALVE CATEGORY/ ACTIVE OR PASSIVE	SIZE (in.) AND TYPE	ACTUATOR TYPE/ NORMAL POSITION	TEST REQ. AND FREQ.	SURV INST. NO. SVI-E12	STROKE TIME REFERENCE VALUE(sec)	LEAKAGE LIMIT(sccm gpm or bubbles)	DEVICE SET PRESS. REFERENCE VALUE(psi)	JUSTIFI-CATIONS & RELIEF REQUEST NO.	REMARKS
1E12-F028B	2	A	12	MO	EO -Q	T2002					SVI-C61-T1202
	B-6	ACTIVE	GT	C	EC -Q	T2002					REMOTE S/D
					STO-Q	T2002	75.6*			VR-3	LOCAL BREAKER
					STC-Q	T2002	74.3*			VR-3	
					LJ -PB	T9412		2773.0			
					PI -2Y	T2002				VR-3	VR-Pending 16102
1E12-F037A	2	A	12	MO	EO -CS	T2004A				CS-11	SVI-C61-T1201
	B-11	ACTIVE	GL	C	EC -CS	T2004A				CS-11	REMOTE S/D
					STO-CS	T2004A	58.4*			CS-11	PANEL
					STC-CS	T2004A	58.3*			CS-11	
					LJ -PB	T8113		2773.0			
					PI -2Y	T2004A					
1E12-F037B	2	A	12	MO	EO -CS	T2004B				CS-11	SVI-C61-T1202
	B-6	ACTIVE	GL	C	EC -CS	T2004B				CS-11	REMOTE S/D
					STO-CS	T2004B	58.0*			CS-11	LOCAL BREAKER
					STC-CS	T2004B	58.0*			CS-11	
					LJ -PB	T8412		2773.0			
					PI -2Y	T2004B					
1E12-F039A	1	B	12	MA	PI -2Y	T2204					MAINTENANCE
	D-9	PASSIVE	GT	O							ONLY
1E12-F039B	1	B	12	MA	PI -2Y	T2205					MAINTENANCE
	E-7	PASSIVE	GT	O							ONLY
1E12-F039C	1	B	12	MA	PI -2Y	T2206					MAINTENANCE
	C-7	PASSIVE	GT	O							ONLY

VALVE/ DEVICE NO.	CLASS AND DWG. COOR.	VALVE CATEGORY/ ACTIVE OR PASSIVE	SIZE (in.) AND TYPE	ACTUATOR TYPE/ NORMAL POSITION	TEST REQ. AND FREQ.	SURV INST. NO. SVI-E12	STROKE TIME REFERENCE VALUE(sec)	LEAKAGE LIMIT(sccm gpm or bubbles)	DEVICE SET PRESS. REFERENCE VALUE(psi)	JUSTIFI-CATIONS & RELIEF REQUEST NO.	REMARKS
1E12-F041A	1	AC	12	SE/HO	EO -CS	T2003 (GEN)				CS-7	TESTABLE
	D-10	ACTIVE	CH	C	EC -CS	T2003 (GEN)				CS-7	CHECK VALVE
					LK -2Y	T2204		5.0			
					PI -2Y	T2003 (GEN)					
1E12-F041B	1	AC	12	SE/HO	EO -CS	T2003 (GEN)				CS-7	TESTABLE
	E-6	ACTIVE	CH	C	EC -CS	T2003 (GEN)				CS-7	CHECK VALVE
					LK -2Y	T2205		5.0			
					PI -2Y	T2003 (GEN)					
1E12-F041C	1	AC	12	SE/HO	EO -CS	T2003 (GEN)				CS-7	TESTABLE
	C-6	ACTIVE	CH	C	EC -CS	T2003 (GEN)				CS-7	CHECK VALVE
					LJ -PB	T9411		2,773.0			
					LK -2Y	T2206		5.0			
					PI -2Y	T2003 (GEN)					
1E12-F042A	1	A	12	MO	EO -CS	T2004A				CS-3	SVI-C61-T1201
	D-11	ACTIVE	GT	C	EC -CS	T2004A				CS-3	REMOTE S/D
					STO-CS	T2004A	28.0			CS-3/VR-3	PANEL
					STC-CS	T2004A	27.0			CS-3/VR-3	
					LJ -PB	T9113		2773.0			
					LK -2Y	T2204		5.0			
					PI -2Y	T2004A				VR-3	VR-Pending 9189
1E12-F042B	1	A	12	MO	EO -CS	T2004B				CS-3	SVI-C61-T1202
	E-5	ACTIVE	GT	C	EC -CS	T2004B				CS-3	REMOTE S/D
					STO-CS	T2004B	28.0			CS-3/VR-3	LOCAL BREAKER
					STC-CS	T2004B	28.0			CS-3/VR-3	
					LJ -PB	T9412		2773.0			
					LK -2Y	T2205		5.0			
					PI -2Y	T2004B				VR-3	VR-Pending 39158

VALVE/ DEVICE NO.	CLASS AND DWG. COOR.	VALVE CATEGORY/ ACTIVE OR PASSIVE	SIZE (in.) AND TYPE	ACTUATOR TYPE/ NORMAL POSITION	TEST REQ. AND FREQ.	SURV INST. NO. SVI-E12	STROKE TIME REFERENCE VALUE(sec)	LEAKAGE LIMIT(sccm gpm or bubbles)	DEVICE SET PRESS. REFERENCE VALUE(psi)	JUSTIFI-CATIONS & RELIEF REQUEST NO.	REMARKS
1E12-F042C	1	A	12	MO	EO -CS	T2004B				CS-3	
	C-4	ACTIVE	GT	C	EC -CS	T2004B				CS-3	
					STO-CS	T2004B	28.0			CS-3/VR-3	
					STC-CS	T2004B	28.0			CS-3/VR-3	
					LJ -PB	T9411		2773.0			
					LK -2Y	T2206		5.0			
					PI -2Y	T2004B				VR-3	VR-Pending 22927
1E12-F050A	2	AC	12	SE	EO -RO	T2016				RO-11	INTERSYS LEAK
	F-12	ACTIVE	CH	C	EC -RO	T2210				RO-11	LIMIT = 0.163
					LK -2Y	T2210		5.0			GPM
1E12-F050B	2	AC	12	SE	EO -RO	T2021				RO-11	INTERSYS LEAK
	F-4	ACTIVE	CH	C	EC -RO	T2211				RO-11	LIMIT = 0.163
					LK -2Y	T2211		5.0			GPM
1E12-F053A	2	A	12	MO	EO -CS	T2004A				CS-3	SVI-C61-T1201
	F-13	ACTIVE	GL	C	EC -CS	T2004A				CS-3	REMOTE S/D
					STO-CS	T2004A	27.0*			CS-3/VR-3	PANEL,
					STC-CS	T2004A	27.0*			CS-3/VR-3	INTERSYS LEAK
					LJ -PB	T9121		12,000.00			LIMIT = 0.163
					LK -2Y	T2210		5.0			GPM
					PI -2Y	T2004A				VR-3	VR-Pending 17570
1E12-F053B	2	A	12	MO	EO -CS	T2004B				CS-3	SVI-C61-T1202
	F-3	ACTIVE	GL	C	EC -CS	T2004B				CS-3	REMOTE S/D
					STO-CS	T2004B	27.0*			CS-3/VR-3	LOCAL BREAKER,
					STC-CS	T2004B	27.0*			CS-3/VR-3	INTERSYS LEAK
					LJ -PB	T9414		12,000.00			LIMIT = 0.163
					LK -2Y	T2211		5.0			GPM
					PI -2Y	T2004B				VR-3	VR-Pending 44183

SYSTEM: RESIDUAL HEAT REMOVAL (E12) DWG. NO. D-302-642

VALVE/ DEVICE NO.	CLASS AND DWG. COOR.	VALVE CATEGORY/ ACTIVE OR PASSIVE	SIZE (in.) AND TYPE	ACTUATOR TYPE/ NORMAL POSITION	TEST REQ. AND FREQ.	SURV INST. NO. SVI-E12	STROKE TIME REFERENCE VALUE(sec)	LEAKAGE LIMIT(sccm gpm or bubbles)	DEVICE SET PRESS. REFERENCE VALUE(psi)	JUSTIFI-CATIONS & RELIEF REQUEST NO.	REMARKS
1E12-F063A	2	C	8	SE	EO -RO	T2000 (GEN)				RO-9	EO IS OPTIONAL
	F-13	ACTIVE	CH	C	EC -RO	T2000 (GEN)				RO-9	LOC PROGRAM
1E12-F063B	2	C	8	SE	EO -RO	T2000 (GEN)				RO-9	EO IS OPTIONAL
	F-3	ACTIVE	CH	C	EC -RO	T2000 (GEN)				RO-9	LOC PROGRAM
1E12-F063C	2	C	8	SE	EO -RO	T2000 (GEN)				RO-9	EO IS OPTIONAL
	D-4	ACTIVE	CH	C	EC -RO	T2000 (GEN)				RO-9	LOC PROGRAM
1E12-F086	2	C	6	SE	EO -RO	T2000 (GEN)				RO-9	EO IS OPTIONAL
	C-13	ACTIVE	CH	C	EC -RO	T2000 (GEN)				RO-9	LOC PROGRAM
1E12-F105	2	A	24	MO	EO -Q	T2003					
	H-5	ACTIVE	GT	0	EC -Q	T2003					
					STO-Q	T2003	114.0*			VR-3	
					STC-Q	T2003	114.0*			VR-3	
					LW -PB	T9403		5.0			
					PI -2Y	T2003				VR-3	VR-Pending 16192
1E12-F537A	2	B	12	MO	EO -Q	T2001					
	A-9	ACTIVE	GT	C	EC -Q	T2001					
					STO-Q	T2001	68.0*			VR-3	
					STC-Q	T2001	65.0*			VR-3	
					PI -2Y	T2001				VR-3	VR-Pending 16106

VALVE/ DEVICE NO.	CLASS AND DWG. COOR.	VALVE CATEGORY/ ACTIVE OR PASSIVE	SIZE (in.) AND TYPE	ACTUATOR TYPE/ NORMAL POSITION	TEST REQ. AND FREQ.	SURV INST. NO. SVI-E12	STROKE TIME REFERENCE VALUE(sec)	LEAKAGE LIMIT(sccm gpm or bubbles)	DEVICE SET PRESS. REFERENCE VALUE(psi)	JUSTIFI-CATIONS & RELIEF REQUEST NO.	REMARKS
1E12-F537B	2	B	12	MO	EO -Q	T2002					
	B-8	ACTIVE	GT	C	EC -Q	T2002					
					STO-Q	T2002	67.0*			VR-3	
					STC-Q	T2002	64.0*			VR-3	
					PI -2Y	T2002				VR-3	VR-Pending 23212
1E12-F550	2	AC	3/4	SE	EO -RO	T2200				RO-14	FOR THERMAL
	G-10	ACTIVE	CH	C	EC -RO	T2200				RO-14	EXPANSION,
					LJ -PB	T9421		12,000.0			INTERSYSTEM
					LK -2Y	T2200		5.0			LEAKAGE LIMIT
											OF 0.3 GPM
1E12-F558A	2	AC	1	SE	EO -CVCM	T9118				RO-1	
	F-11	ACTIVE	CH	C	EC -CVCM	T9118				RO-1	
					LJ -PB	T9118		1,000.0			
1E12-F558B	2	AC	1	SE	EO -CVCM	T9431				RO-1	
	F-5	ACTIVE	CH	C	EC -CVCM	T9431				RO-1	
					LJ -PB	T9431		1,000.0			
1E12-F605A	2	C	6	SE	EO -CS	T2004 (B21)				CS-8	
	G-11	ACTIVE	CH	C	EC -CS	T2004 (B21)				CS-8	
1E12-F605B	2	C	6	SE	EO -CS	T2004 (B21)				CS-8	
	G-5	ACTIVE	CH	C	EC -CS	T2004 (B21)				CS-8	

SYSTEM: RESIDUAL HEAT REMOVAL (E12) DWG. NO. D-302-643

VALVE/ DEVICE NO.	CLASS AND DWG. COOR.	VALVE CATEGORY/ ACTIVE OR PASSIVE	SIZE (in.) AND TYPE	ACTUATOR TYPE/ NORMAL POSITION	TEST REQ. AND FREQ.	SURV INST. NO. SVI-E12	STROKE TIME REFERENCE VALUE(sec)	LEAKAGE LIMIT(sccm gpm or bubbles)	DEVICE SET PRESS. REFERENCE VALUE(psi)	JUSTIFI-CATIONS & RELIEF REQUEST NO.	REMARKS
1E12-F003B	2	B	18	MO	EO -Q	T2002					SVI-C61-T1202
	E-4	ACTIVE	GL	O	EC -Q	T2002					REMOTE S/D
					STO-Q	T2002	58.2*			VR-3	LOCAL BREAKER
					STC-Q	T2002	58.4*			VR-3	
					PI -2Y	T2002				VR-3	VR-Pending 16268
1E12-F011B	2	A	4	MO	EO -Q	T2002					SVI-C61-T1202
	D-6	ACTIVE	GL	C	EC -Q	T2002					REMOTE S/D
					STO-Q	T2002	30.0*				LOCAL BREAKER
					STC-Q	T2002	30.0*				
					LW -PB	T9407		5.0			
					PI -2Y	T2002					
1E12-F021	2	A	18	MO	EO -Q	T2003					
	C-14	ACTIVE	GL	C	EC -Q	T2003					
					STO-Q	T2003	73.2*			VR-3	
					STC-Q	T2003	73.9*			VR-3	
					LJ -PB	T9408		4159			
					PI -2Y	T2003				VR-3	VR-Pending 16297
1E12-F024B	2	A	18	MO	EO -Q	T2002					SVI-C61-T1202
	D-13	ACTIVE	GL	C	EC -Q	T2002					REMOTE S/D
					STO-Q	T2002	96.0			VR-3	LOCAL BREAKER
					STC-Q	T2002	96.0			VR-3	
					LW -PB	T9407		5.0			
					PI -2Y	T2002				VR-3	VR-Pending 24063
1E12-F025B	2	AC	1	SE	RT -10Y	T2100 (GEN)			485.0		
	D-11	ACTIVE	RE	C	LJ -PB	T9429		1386.0			

VALVE/ DEVICE NO.	CLASS AND DWG. COOR.	VALVE CATEGORY/ ACTIVE OR PASSIVE	SIZE (in.) AND TYPE	ACTUATOR TYPE/ NORMAL POSITION	TEST REQ. AND FREQ.	SURV INST. NO. SVI-E12	STROKE TIME REFERENCE VALUE(sec)	LEAKAGE LIMIT(sccm gpm or bubbles)	DEVICE SET PRESS. REFERENCE VALUE(psi)	JUSTIFI-CATIONS & RELIEF REQUEST NO.	REMARKS
1E12-F031B	2	C	18	SE	EO -Q	T2002					
	J-10	ACTIVE	CH	C	EC -Q	T2002					
1E12-F031C	2	C	18	SE	EO -Q	T2003					
	E-11	ACTIVE	CH	C	EC -Q	T2003					
1E12-F046C	2	C	6	SE	EO -Q	T2003					
	F-13	ACTIVE	CH	C	EC -Q	T2003					
1E12-F047B	2	B	18	MO	EO -Q	T2002					SVI-C61-T1202
	E-7	ACTIVE	GT	O	EC -Q	T2002					REMOTE S/D
					STO-Q	T2002	86.0*				LOCAL BREAKER
					STC-Q	T2002	85.0*				
					PI -2Y	T2002					
1E12-F048B	2	B	18	MO	EO -Q	T2002					SVI-C61-T1202
	D-9	ACTIVE	GL	O	EC -Q	T2002					REMOTE S/D
					STO-Q	T2002	75.0*			VR-3	LOCAL BREAKER
					STC-Q	T2002	77.0*			VR-3	
					PI -2Y	T2002				VR-3	VR-Pending 16165
1E12-F055B	2	AC	4	SE	RT -10Y	T2100 (GEN)			485.0		
	E-8	ACTIVE	RE	C	LJ -PB	T9429		1386.0			
1E12-F060B	2	B	3/4	SO	EO -Q	T2002					
	E-2	ACTIVE	GL	C	EC -Q	T2002					
					STO-Q	T2002	2.0*				
					STC-Q	T2002	2.0*				
					FS -Q	T2002					
					PI -2Y	T2020					

VALVE/ DEVICE NO.	CLASS AND DWG. COOR.	VALVE CATEGORY/ ACTIVE OR PASSIVE	SIZE (in.) AND TYPE	ACTUATOR TYPE/ NORMAL POSITION	TEST REQ. AND FREQ.	SURV INST. NO. SVI-E12	STROKE TIME REFERENCE VALUE(sec)	LEAKAGE LIMIT(sccm gpm or bubbles)	DEVICE SET PRESS. REFERENCE VALUE(psi)	JUSTIFI-CATIONS & RELIEF REQUEST NO.	REMARKS
1E12-F064B	2	A	6	MO	EO -Q	T2002					SVI-C61-T1202
	J-11	ACTIVE	GT	O	EC -Q	T2002					REMOTE S/D
					STO-Q	T2002	13.0			VR-3	LOCAL BREAKER
					STC-Q	T2002	12.0			VR-3	
					LW -PB	T9407		3.0			
					PI -2Y	T2002				VR-3	VR-Pending 16169
1E12-F064C	2	A	6	MO	EO -Q	T2003					
	F-12	ACTIVE	GT	O	EC -Q	T2003					
					STO-Q	T2003	12.0			VR-3	
					STC-Q	T2003	12.0			VR-3	
					LW -PB	T8408		3.0			
					PI -2Y	T2003				VR-3	VR-Pending 18129
1E12-F073B	2	A	1	MO	EO -Q	T2002					
	F-8	ACTIVE	GL	O	EC -Q	T2002					
					STO-Q	T2002	13.0*			VR-3	
					STC-Q	T2002	12.0*			VR-3	
					LJ -2Y	T9431		1,000.0			
					PI -2Y	T2002				VR-3	VR-Pending 43093
1E12-F074B	2	B	1	MO	EO -Q	T2002					
	G-8	ACTIVE	GL	C	EC -Q	T2002					
					STO-Q	T2002	6.8				
					STC-Q	T2002	6.9				
					PI -2Y	T2002					
1E12-F075B	2	B	3/4	SO	EO -Q	T2002					
	E-1	ACTIVE	GL	C	EC -Q	T2002					
					STO-Q	T2002	2.0*				
					STC-Q	T2002	2.0*				
					FS -Q	T2002					
					PI -2Y	T2020					

SYSTEM: RESIDUAL HEAT REMOVAL (E12) DWG. NO. D-302-643

VALVE/ DEVICE NO.	CLASS AND DWG. COOR.	VALVE CATEGORY/ ACTIVE OR PASSIVE	SIZE (in.) AND TYPE	ACTUATOR TYPE/ NORMAL POSITION	TEST REQ. AND FREQ.	SURV INST. NO. SVI-E12	STROKE TIME REFERENCE VALUE(sec)	LEAKAGE LIMIT(sccm gpm or bubbles)	DEVICE SET PRESS. REFERENCE VALUE(psi)	JUSTIFI-CATIONS & RELIEF REQUEST NO.	REMARKS
1E12-F084B	2	C	1 1/2	SE	EO -CVCM	T2023				RO-32	
	H-9	ACTIVE	CH	C	EC -CVCM	T2000 (GEN)				RO-33	
1E12-F084C	2	C	1 1/2	SE	EO -CVCM	T2023				RO-32	
	E-10	ACTIVE	CH	C	EC -CVCM	T2000 (GEN)				RO-33	
1E12-F085B	2	C	1 1/2	SE	EO -RO	T2023				RO-32	CLOSED USING
	H-9	ACTIVE	SC	C	EC -Q	T2002					HANDWHEEL
1E12-F085C	2	C	1 1/2	SE	EO -RO	T2023				RO-32	CLOSED USING
	E-10	ACTIVE	SC	C	EC -Q	T2003					HANDWHEEL
1E12-F102	2	A	1 1/2	MA	EO -N/A	NONE					
	E-9	PASSIVE	GL	LC	EC -N/A	NONE					
					LJ -PB	T9115 (E51)		1,000.0			

SYSTEM: LOW PRESSURE CORE SPRAY (E21) DWG. NO. D-302-705

VALVE/ DEVICE NO.	CLASS AND DWG. COOR.	VALVE CATEGORY/ ACTIVE OR PASSIVE	SIZE (in.) AND TYPE	ACTUATOR TYPE/ NORMAL POSITION	TEST REQ. AND FREQ.	SURV INST. NO. SVI-E21	STROKE TIME REFERENCE VALUE(sec)	LEAKAGE LIMIT(sccm gpm or bubbles)	DEVICE SET PRESS. REFERENCE VALUE(psi)	JUSTIFI-CATIONS & RELIEF REQUEST NO.	REMARKS
1E21-F001	2	A	24	MO	EC -Q	T2001					
	G-10	ACTIVE	GT	O	STC-Q	T2001	113.0			VR-3	
					LW -PB	T9103		5.0			
					PI -2Y	T2001				VR-3	VR-Pending 13735
1E21-F003	2	C	14	SE	EO -Q	T2001					
	C-6	ACTIVE	CH	C	EC -Q	T2001					
1E21-F005	1	A	12	MO	EO -CS	T2004				CS-3	
	C-9	ACTIVE	GT	C	EC -CS	T2004				CS-3	
					STO-CS	T2004	27.0			CS-3/VR-3	
					STC-CS	T2004	28.0			CS-3/VR-3	
					LJ -PB	T9112		2,773.0			
					LK -2Y	T2200		5.0			
					PI -2Y	T2004				VR-3	VR-Pending 11500
1E21-F006	1	AC	12	SE/HO	EO -CS	T2003 (GEN)				CS-7	TESTABLE
	C-12	ACTIVE	CH	C	EC -CS	T2003 (GEN)				CS-7	CHECK VALVE
					LJ -PB	T9112		2,773.0			
					LK -2Y	T2200		5.0			
					PI -2Y	T2003 (GEN)					
1E21-F007	1	B	12	MA	E0 -N/A	NONE					MAINTENANCE
	C-13	PASSIVE	GT	LO	EC -N/A	NONE					ONLY
					PI -2Y	T2200					
1E21-F011	2	A	4	MO	EC -Q	T2001					
	E-6	ACTIVE	GT	O	STO-Q	T2001	21.1			VR-3	
					STC-Q	T2001	21.0			VR-3	
					LW -PB	T9105 (E12)		5.0			
					PI -2Y	T2001				VR-3	VR-Pending 13738

SYSTEM: LOW PRESSURE CORE SPRAY (E21) DWG. NO. D-302-705

VALVE/ DEVICE NO.	CLASS AND DWG. COOR.	VALVE CATEGORY/ ACTIVE OR PASSIVE	SIZE (in.) AND TYPE	ACTUATOR TYPE/ NORMAL POSITION	TEST REQ. AND FREQ.	SURV INST. NO. SVI-E21	STROKE TIME REFERENCE VALUE(sec)	LEAKAGE LIMIT(sccm gpm or bubbles)	DEVICE SET PRESS. REFERENCE VALUE(psi)	JUSTIFI-CATIONS & RELIEF REQUEST NO.	REMARKS
1E21-F012	2	A	12	MO	EC -Q	T2001					
	D-8	ACTIVE	GL	C	STC-Q	T2001	59.0*			VR-3	
					LW -PB	T9105 (E12)		5.0			
					PI -2Y	T2001				VR-3	VR-Pending 13761
1E21-F018	2	AC	1 1/2	SE	RT -10Y	T2100 (GEN)			585.0		
	B-8	ACTIVE	RE	C	LJ -PB	T9107 (E12)		1,386.0			
1E21-F031	2	C	1	SE	RT -10Y	T2100 (GEN)		5 dpm	100.0		LOC PROGRAM
	H-8	ACTIVE	RE	C							
1E21-F033	2	C	1 1/2	SE	EO -RO	T2004				RO-32	
	F-7	ACTIVE	CH	C	EC -Q	T2001					
1E21-F034	2	C	1 1/2	SE	EO -RO	T2004				RO-32	CLOSED USING
	F-7	ACTIVE	SC	C	EC -Q	T2001					HANDWHEEL
1E21-F501	2	C	12	SE	EO -Q	T2001					REFERENCE
	E-8	ACTIVE	CH	C	EC -CVCM	T2000 (GEN)				RO-2	IEB: 83-03

VALVE/ DEVICE NO.	CLASS AND DWG. COOR.	VALVE CATEGORY/ ACTIVE OR PASSIVE	SIZE (in.) AND TYPE	ACTUATOR TYPE/ NORMAL POSITION	TEST REQ. AND FREQ.	SURV INST. NO. SVI-E22	STROKE TIME REFERENCE VALUE(sec)	LEAKAGE LIMIT(sccm gpm or bubbles)	DEVICE SET PRESS. REFERENCE VALUE(psi)	JUSTIFI-CATIONS & RELIEF REQUEST NO.	REMARKS
1E22-F001	2	B	16	MO	EO -Q	T2001					
	H-13	ACTIVE	GT	O	EC -Q	T2001					
					STO-Q	T2001	68.6*			VR-3	
					STC-Q	T2001	67.0*			VR-3	
					PI -2Y	T2001				VR-3	VR-Pending 16194
1E22-F002	2	C	16	SE	EO -Q	T2001					
	H-13	ACTIVE	CH	C	EC -Q	T2004					
1E22-F004	1	A	12	MO	EO -CS	T2002				CS-3	
	D-7	ACTIVE	GT	C	EC -CS	T2002				CS-3	
					STO-CS	T2002	13.4			CS-3/VR-3	
					STC-CS	T2002	14.1			CS-3/VR-3	
					LJ -PB	T9410		2,773.0			
					LK -2Y	T2200		5.0			
					PI -2Y	T2002				VR-3	VR-Pending 16662
1E22-F005	1	AC	12	SE/HO	EO -CS	T2003 (GEN)				CS-7	TESTABLE
	D-5	ACTIVE	CH	C	EC -CS	T2003 (GEN)				CS-7	CHECK VALVE
					LJ -PB	T9410		2,773.0			
					LK -2Y	T2200		5.0			
					PI -2Y	T2003 (GEN)					
1E22-F006	2	C	1 1/2	SE	EO -RO	T2002				RO-32	CLOSED USING
	G-10	ACTIVE	SC	C	EC -Q	T2001					HANDWHEEL
1E22-F007	2	C	1 1/2	SE	EO -CVCM	T2002				RO-32	
	G-10	ACTIVE	CH	C	EC -CVCM	T2000 (GEN)				RO-2	
1E22-F010	2	B	10	MO	EC -Q	T2001					
	C-9	ACTIVE	GL	C	STC-Q	T2001	46.0*			VR-3	
					PI -2Y	T2001				VR-3	VR-Pending 14427

SYSTEM: HIGH PRESSURE CORE SPRAY (E22) DWG. NO. D-302-701

VALVE/ DEVICE NO.	CLASS AND DWG. COOR.	VALVE CATEGORY/ ACTIVE OR PASSIVE	SIZE (in.) AND TYPE	ACTUATOR TYPE/ NORMAL POSITION	TEST REQ. AND FREQ.	SURV INST. NO. SVI-E22	STROKE TIME REFERENCE VALUE(sec)	LEAKAGE LIMIT(sccm gpm or bubbles)	DEVICE SET PRESS. REFERENCE VALUE(psi)	JUSTIFI-CATIONS & RELIEF REQUEST NO.	REMARKS
1E22-F011	2	B	10	MO	EC -Q	T2001					
	C-11	ACTIVE	GL	C	STC-Q	T2001	48.0*			VR-3	
					PI -2Y	T2001				VR-3	VR-Pending 32717
1E22-F012	2	A	4	MO	EC -Q	T2001					
	D-10	ACTIVE	GT	C	EO -Q	T2001					
					STO-Q	T2001	7.3			VR-3	
					STC-Q	T2001	7.1			VR-3	
					LJ -PB	T9409		2,773.0			
					PI -2Y	T2001				VR-3	VR-Pending 8617
1E22-F014	2	C	1	SE	RT -10Y	T2100 (GEN)		5 dpm	100.0		LOC PROGRAM
	H-11	ACTIVE	RE	C							
1E22-F015	2	A	24	MO	EC -Q	T2001					
	H-7	ACTIVE	GT	C	EO -Q	T2001					
					STO-Q	T2001	21.0*			VR-3	
					STC-Q	T2001	21.0*			VR-3	
					LW -PB	T9401		5.0			
					PI -2Y	T2001				VR-3	VR-Pending 16200
1E22-F016	2	C	24	SE	EO -Q	T2001					
	H-7	ACTIVE	CH	C	EC -Q	T2004					
1E22-F023	2	A	12	MO	EC -Q	T2001					
	E-8	ACTIVE	GL	C	STC-Q	T2001	53.0*			VR-3	
					LJ -PB	T9409		2,773.0			
					PI -2Y	T2001				VR-3	VR-Pending 16197

SYSTEM: HIGH PRESSURE CORE SPRAY (E22) DWG. NO. D-302-701

VALVE/ DEVICE NO.	CLASS AND DWG. COOR.	VALVE CATEGORY/ ACTIVE OR PASSIVE	SIZE (in.) AND TYPE	ACTUATOR TYPE/ NORMAL POSITION	TEST REQ. AND FREQ.	SURV INST. NO. SVI-E22	STROKE TIME REFERENCE VALUE(sec)	LEAKAGE LIMIT(sccm gpm or bubbles)	DEVICE SET PRESS. REFERENCE VALUE(psi)	JUSTIFI-CATIONS & RELIEF REQUEST NO.	REMARKS
1E22-F024	2 D-10	C ACTIVE	16 CH	SE C	EO -Q EC -Q	T2001 T2001					
1E22-F035	2 D-7	AC ACTIVE	1 1/2 RE	SE C	RT -10Y LJ -PB	T2100 (GEN) T9409		 2,773.0	1560.0		
1E22-F036	1 D-4	B PASSIVE	12 GT	MA O	EO -N/A EC -N/A PI -2Y	NONE NONE T2200					MAINTENANCE ONLY
1E22-F039	2 C-9	C ACTIVE	1 CH	SE C	EO -Q EC -RO	T2001 T2005 (GEN)				 RO-7	FOR THERMAL EXPANSION PTI-P0008(EC)
1E22-F621	2 F-6	C ACTIVE	1 CH	SE C	EO -RO EC -Q	T2101 (GEN) T2001				RO-24	INTERNAL SPRING CHECK
1E22-F622	2 F-6	C ACTIVE	1 CH	SE C	EO -RO EC -Q	T2101 (GEN) T2001				RO-24	INTERNAL SPRING CHECK

SYSTEM: REACTOR CORE ISOLATION COOLING (E51) DWG. NO. D-302-631

VALVE/ DEVICE NO.	CLASS AND DWG. COOR.	VALVE CATEGORY/ ACTIVE OR PASSIVE	SIZE (in.) AND TYPE	ACTUATOR TYPE/ NORMAL POSITION	TEST REQ. AND FREQ.	SURV INST. NO. SVI-E51	STROKE TIME REFERENCE VALUE(sec)	LEAKAGE LIMIT(sccm gpm or bubbles)	DEVICE SET PRESS. REFERENCE VALUE(psi)	JUSTIFI-CATIONS & RELIEF REQUEST NO.	REMARKS
1E51-F010	2	B	6	MO	EC -Q	T2001					T1272 (EC, ST)
	F-6	ACTIVE	GT	O	STO-Q	T2001	24.2*			VR-3	DURING S/U
					STC-Q	T2001	25.0*			VR-3	SVI-C61-T1200
					PI -2Y	T1272				VR-3	REMOTE S/D PAN
											VR-Pending 16666
1E51-F011	2	C	6	SE	EO -Q	T2001					T1272 (EO, EC)
	F-6	ACTIVE	CH	C	EC -Q	T2001					DURING S/U
1E51-F013	1	A	6	MO	EO -CS	T2003				CS-4	SVI-C61-T1200
	C-8	ACTIVE	GT	C	EC -CS	T2003				CS-4	REMOTE S/D
					STO-CS	T2003	11.0			CS-4/VR-3	PANEL
					STC-CS	T2003	11.0			CS-4/VR-3	
					LJ -PB	T9123		1,386.0			
					LK -2Y	T2202 (E12)		0.036			NOTE 10
					PI -2Y	T2003				VR-3	VR-Pending 15296
1E51-F017	2	C	1	SE	RT -10Y	T2100 (GEN)		5 dpm	100.0		LOC PROGRAM
	E-4	ACTIVE	RE	C							
1E51-F019	2	A	2	MO	EO -Q	T2001					T1272
	E-8	ACTIVE	GL	C	EC -Q	T2001					(EC, EO, ST)
					STO-Q	T2001	4.0			VR-3	DURING S/U
					STC-Q	T2001	4.0			VR-3	SVI-C61-T1200
					LJ -PB	T9104		1,000.0			REMOTE S/D PAN
					PI -2Y	T1272				VR-3	VR-Pending 19324
1E51-F021	2	C	2	SE	EO -Q	T2001					T1272 (EO)
	E-7	ACTIVE	CH	C	EC -RO	T2009				RO-7	DURING S/U

SYSTEM: REACTOR CORE ISOLATION COOLING (E51) DWG. NO. D-302-631

VALVE/ DEVICE NO.	CLASS AND DWG. COOR.	VALVE CATEGORY/ ACTIVE OR PASSIVE	SIZE (in.) AND TYPE	ACTUATOR TYPE/ NORMAL POSITION	TEST REQ. AND FREQ.	SURV INST. NO. SVI-E51	STROKE TIME REFERENCE VALUE(sec)	LEAKAGE LIMIT(sccm gpm or bubbles)	DEVICE SET PRESS. REFERENCE VALUE(psi)	JUSTIFI-CATIONS & RELIEF REQUEST NO.	REMARKS
1E51-F022	2	B	4	MO	EC -Q	T2001					T1272 (EC, ST)
	C-8	ACTIVE	GL	C	STC-Q	T2001	10.1*			VR-3	DURING S/U
					PI -2Y	T1272				VR-3	SVI-C61-T1200
											REMOTE S/D PAN
											VR-Pending 16812
1E51-F030	2	C	6	SE	EO -CVCM	T2000 (GEN)				RO-2	
	H-8	ACTIVE	CH	C	EC -CVCM	T2000 (GEN)				RO-2	
1E51-F031	2	A	6	MO	EC -Q	T2001					T1272 (EC, ST)
	H-8	ACTIVE	GT	C	STO-Q	T2001	16.9*			VR-3	DURING S/U
					STC-Q	T2001	17.0*			VR-3	SVI-C61-T1200
					LW -PB	T9101		3.0			REMOTE S/D PAN
					PI -2Y	T1272				VR-3	VR-Pending 19326
1E51-F040	2	C	10	SE	EO -Q	T2001					T1272 (EO)
	G-5	ACTIVE	CH	C	EC -CVCM	T9106				RO-7	DURING S/U,
					LJ -PB	T9106		2773.0			REFERENCE
											IEB: 83-03
1E51-F059	2	B	4	MO	EC -Q	T2001					T1272 (EC, ST)
	B-8	ACTIVE	GT	C	STC-Q	T2001	10.9*			VR-3	DURING S/U,
					PI -2Y	T1272				VR-3	SVI-C61-T1200
											REMOTE S/D PAN
											VR-Pending 5296
1E51-F061	2	C	1 1/2	SE	EO -CVCM	T2003				RO-32	
	E-4	ACTIVE	CH	C	EC -CVCM	T2000 (GEN)				RO-33	

SYSTEM: REACTOR CORE ISOLATION COOLING (E51) DWG. NO. D-302-631

VALVE/ DEVICE NO.	CLASS AND DWG. COOR.	VALVE CATEGORY/ ACTIVE OR PASSIVE	SIZE (in.) AND TYPE	ACTUATOR TYPE/ NORMAL POSITION	TEST REQ. AND FREQ.	SURV INST. NO. SVI-E51	STROKE TIME REFERENCE VALUE(sec)	LEAKAGE LIMIT(sccm gpm or bubbles)	DEVICE SET PRESS. REFERENCE VALUE(psi)	JUSTIFI-CATIONS & RELIEF REQUEST NO.	REMARKS
1E51-F062	2	C	1 1/2	SE	EO -RO	T2003				RO-32	T1272 (EC)
	E-4	ACTIVE	SC	C	EC -Q	T2001					DURING S/U,
											CLOSED USING
											HANDWHEEL
1E51-F065	1	AC	6	SE	EO -CS	T2010				CS-13	MANUALLY
	C-9	ACTIVE	CH	C	EC -RO	T2202 (E12)				RO-25	TESTABLE
					LK -2Y	T2202 (E12)		3.0			
1E51-F066	1	AC	6	SE/HO	EO -CS	T2010				CS-13	TESTABLE
	C-11	ACTIVE	CH	C	EC -RO	T2201				RO-25	CHECK VALVE
					LJ -PB	T8123		5,500.0			
					LK -2Y	T2201		3.0			
					PI -2Y	T2010					
1E51-F068	2	A	12	MO	EO -Q	T2001					
	G-7	ACTIVE	GT	0	EC -Q	T2001					
					STO-Q	T2001	40.1*			VR-3	T1272 (EC, ST)
					STC-Q	T2001	39.6*			VR-3	DURING S/U,
					LJ -PB	T9106		2,773.0			SVI-C61-T1200
					PI -2Y	T1272				VR-3	REMOTE S/D PAN
											VR-Pending 19321

SYSTEM: REACTOR CORE ISOLATION COOLING (E51) DWG. NO. D-302-631

VALVE/ DEVICE NO.	CLASS AND DWG. COOR.	VALVE CATEGORY/ ACTIVE OR PASSIVE	SIZE (in.) AND TYPE	ACTUATOR TYPE/ NORMAL POSITION	TEST REQ. AND FREQ.	SURV INST. NO. SVI-E51	STROKE TIME REFERENCE VALUE(sec)	LEAKAGE LIMIT(sccm gpm or bubbles)	DEVICE SET PRESS. REFERENCE VALUE(psi)	JUSTIFI-CATIONS & RELIEF REQUEST NO.	REMARKS
1E51-F079	2	C	1 1/2	SE	EO -CVCM	T2000 (GEN)				RO-33	
						T2008					
	E-7	ACTIVE	CH	C	EC -CVCM	T2000 (GEN)				RO-33	
1E51-F081	2	C	1 1/2	SE	EO -CVCM	T2000 (GEN)				RO-33	
						T2008					
	E-8	ACTIVE	CH	C	EC -CVCM	T2000 (GEN)				RO-33	
1E51-F090	2	C	1	SE	EO -Q	T2001					T1272 (EO)
	C-8	ACTIVE	CH	C	EC -RO	T2005 (GEN)				RO-7	DURING S/U, FOR THERMAL EXPANSION PTI-P0004 (EC)
1E51-F577	2	C	6	SE	EO -Q	T2001					T1272 (EO, EC)
	F-4	ACTIVE	CH	C	EC -Q	T2001					DURING S/U

SYSTEM: REACTOR CORE ISOLATION COOLING (E51) DWG. NO. D-302-632

VALVE/ DEVICE NO.	CLASS AND DWG. COOR.	VALVE CATEGORY/ ACTIVE OR PASSIVE	SIZE (in.) AND TYPE	ACTUATOR TYPE/ NORMAL POSITION	TEST REQ. AND FREQ.	SURV INST. NO. SVI-E51	STROKE TIME REFERENCE VALUE(sec)	LEAKAGE LIMIT(sccm gpm or bubbles)	DEVICE SET PRESS. REFERENCE VALUE(psi)	JUSTIFI-CATIONS & RELIEF REQUEST NO.	REMARKS
1E51-D001	2 G-12	D ACTIVE	8 RU	SE C	RD -5YP	NONE					REPETITIVE PROCEDURE 1E51D001,001
1E51-D002	O2 G-13	D ACTIVE	8 RU	SE C	RD -5YP	NONE					REPETITIVE PROCEDURE 1E51D002,001
1E51-F004	2 J-10	B ACTIVE	1 DI	AO O	E0 -Q STO-Q STC-Q FS -Q PI 2Y	T2001 T2001 T2001 T2001 T1272	 3.7* 3.5*				T1272 (EO, STO, STC, FS) DURING S/U
1E51-F005	2 J-11	B ACTIVE	1 DI	AO C	E0 -Q STO-Q STC-Q FS -Q PI 2Y	T2001 T2001 T2001 T2001 T1272	 2.5* 4.3*				T1272 (EO, STO, STC, FS) DURING S/U
1E51-F018	2 D-7	C ACTIVE	1 RE	SE C	RT -10Y	T2100 (GEN)		5 dpm	150.0		LOC PROGRAM
1E51-F025	2 F-4	B ACTIVE	1 DI	AO O	E0 -Q STO-Q STC-Q FS -Q PI 2Y	T2001 T2001 T2001 T2001 T1272	 4.8* 4.9*				T1272 (EO, STO, STC, FS) DURING S/U
1E51-F026	2 F-4	B ACTIVE	1 DI	AO O	E0 -Q STO-Q STC-Q FS -Q PI 2Y	T2001 T2001 T2001 T2001 T1272	 5.0* 6.2*				T1272 (EO, STO, STC, FS) DURING S/U

SYSTEM: REACTOR CORE ISOLATION COOLING (E51) DWG. NO. D-302-632

VALVE/ DEVICE NO.	CLASS AND DWG. COOR.	VALVE CATEGORY/ ACTIVE OR PASSIVE	SIZE (in.) AND TYPE	ACTUATOR TYPE/ NORMAL POSITION	TEST REQ. AND FREQ.	SURV INST. NO. SVI-E51	STROKE TIME REFERENCE VALUE(sec)	LEAKAGE LIMIT(sccm gpm or bubbles)	DEVICE SET PRESS. REFERENCE VALUE(psi)	JUSTIFI-CATIONS & RELIEF REQUEST NO.	REMARKS
1E51-F045	2	B	4	MO	EO -Q	T2001					T1272 (EC, EO,
	E-6	ACTIVE	GL	C	EC -Q	T2001					STO, STC)
					STO-Q	T2001	9.1*			VR-3	DURING S/U,
					STC-Q	T2001	10.1*			VR-3	SVI-C61-T1200
					PI -2Y	T1272				VR-3	REMOTE S/D PAN
											VR-Pending 16790
1E51-F063	1	A	10	MO	EO -Q	T2001					T1272 (EC, EO,
	C-5	ACTIVE	GT	0	EC -Q	T2001					STO, STC)
					STO-Q	T2001	17.6			VR-3	DURING S/U,
					STC-Q	T2001	17.9			VR-3	SVI-C61-T1200
					LJ -PB	T9422		2,311.0		VR-3	REMOTE S/D PAN
					PI -2Y	T9422/T2004 (GEN)					VR-Pending 9065
1E51-F064	1	A	10	MO	EO -Q	T2001					T1272 (EC, EO,
	C-3	ACTIVE	GT	0	EC -Q	T2001					STO, STC)
					STO-Q	T2001	17.8			VR-3	DURING S/U,
					STC-Q	T2001	18.3			VR-3	SVI-C61-T1200
					LJ -PB	T9422		2,311.0			REMOTE S/D PAN
					PI -2Y	T1272				VR-3	VR-Pending 16845
1E51-F076	1	A	1	MO	EO -Q	T2001					T1272 (EC, EO,
	D-5	ACTIVE	GL	C	EC -Q	T2001					STO, STC)
					STO-Q	T2001	8.5*			VR-3	DURING S/U,
					STC-Q	T2001	8.6*			VR-3	SVI-C61-T1200
					LJ -PB	T9422		2,311.0			REMOTE S/D PAN
					PI -2Y	T9422/T2004 (GEN)				VR-3	VR-Pending 16847

SYSTEM: REACTOR CORE ISOLATION COOLING (E51) DWG. NO. D-302-632

VALVE/ DEVICE NO.	CLASS AND DWG. COOR.	VALVE CATEGORY/ ACTIVE OR PASSIVE	SIZE (in.) AND TYPE	ACTUATOR TYPE/ NORMAL POSITION	TEST REQ. AND FREQ.	SURV INST. NO. SVI-E51	STROKE TIME REFERENCE VALUE(sec)	LEAKAGE LIMIT(sccm gpm or bubbles)	DEVICE SET PRESS. REFERENCE VALUE(psi)	JUSTIFI-CATIONS & RELIEF REQUEST NO.	REMARKS
1E51-F510	2 E-8	B ACTIVE	4 GL	MO O	EC -Q STC-Q PI -2Y	T2001 T2001 T1272	8.4*				T1272 (EC, ST) DURING S/U, SVI-C61-T1200 REMOTE S/D PANEL RCIC TRIP VALVE
1E51-F511	2 E-9	B ACTIVE	4 GT	HO O	PI -2Y	T1272					SKID MOUNTED PRV WITH NO FS SAFETY FUNCTION <L01937>
1E51-F561	O3 N/A	C ACTIVE	½ RE	SE C	RT -10Y	T2100 (GEN)			27.0		RCIC TURBINE CONTROL OIL

SYSTEM: CONTAINMENT INTEGRATED LEAK RATE TESTING (E61) DWG. NO. D-302-811

VALVE/ DEVICE NO.	CLASS AND DWG. COOR.	VALVE CATEGORY/ ACTIVE OR PASSIVE	SIZE (in.) AND TYPE	ACTUATOR TYPE/ NORMAL POSITION	TEST REQ. AND FREQ.	SURV INST. NO. SVI-E61	STROKE TIME REFERENCE VALUE(sec)	LEAKAGE LIMIT(sccm gpm or bubbles)	DEVICE SET PRESS. REFERENCE VALUE(psi)	JUSTIFI-CATIONS & RELIEF REQUEST NO.	REMARKS
1E61-F549	2 D-10	A PASSIVE	½ GL	MA LC	LJ -PB	T9317		1,000.0			
1E61-F550	2 D-11	A PASSIVE	¾ GL	MA LC	LJ -PB	T9317		1,000.0			
1E61-F551	2 D-10	A PASSIVE	¾ GL	MA LC	LJ -PB	T9319		1,000.0			
1E61-F552	2 D-10	A PASSIVE	½ GL	MA LC	LJ -PB	T9319		1,000.0			

SYSTEM: INCLINED FUEL TRANSFER (F42) DWG. NO. D-302-970

VALVE/ DEVICE NO.	CLASS AND DWG. COOR.	VALVE CATEGORY/ ACTIVE OR PASSIVE	SIZE (in.) AND TYPE	ACTUATOR TYPE/ NORMAL POSITION	TEST REQ. AND FREQ.	SURV INST. NO. SVI-F42	STROKE TIME REFERENCE VALUE(sec)	LEAKAGE LIMIT(sccm gpm or bubbles)	DEVICE SET PRESS. REFERENCE VALUE(psi)	JUSTIFI-CATIONS & RELIEF REQUEST NO.	REMARKS
1F42-F003	2 G-9	A PASSIVE	4 BA	MA/MO C	LJ -PB	T8205		1,000.0			Non-Class 1E power to motor

SYSTEM: REACTOR WATER CLEANUP (G33) DWG. NO. D-302-671

VALVE/ DEVICE NO.	CLASS AND DWG. COOR.	VALVE CATEGORY/ ACTIVE OR PASSIVE	SIZE (in.) AND TYPE	ACTUATOR TYPE/ NORMAL POSITION	TEST REQ. AND FREQ.	SURV INST. NO. SVI-G33	STROKE TIME REFERENCE VALUE(sec)	LEAKAGE LIMIT(sccm gpm or bubbles)	DEVICE SET PRESS. REFERENCE VALUE(psi)	JUSTIFI-CATIONS & RELIEF REQUEST NO.	REMARKS
1G33-F001	1	A	6	MO	EC -CS	T2003				CS-9	
	J-8	ACTIVE	GT	O	STC-CS	T2003	17	1,386.0		CS-9/VR-3	
					LJ -PB	T9131					
					PI -2Y	T2003				VR-3	VR-Pending 15026

SYSTEM: REACTOR WATER CLEANUP (G33) DWG. NO. D-302-672

VALVE/ DEVICE NO.	CLASS AND DWG. COOR.	VALVE CATEGORY/ ACTIVE OR PASSIVE	SIZE (in.) AND TYPE	ACTUATOR TYPE/ NORMAL POSITION	TEST REQ. AND FREQ.	SURV INST. NO. SVI-G33	STROKE TIME REFERENCE VALUE(sec)	LEAKAGE LIMIT(sccm gpm or bubbles)	DEVICE SET PRESS. REFERENCE VALUE(psi)	JUSTIFI-CATIONS & RELIEF REQUEST NO.	REMARKS
1G33-F004	1	A	6	MO	EC -CS	T2003				CS-9	SVI-G33-T2004
	H-7	ACTIVE	GT	O	STC-CS	T2003	17	1,386.0		CS-9/VR-3	(PI) REMOTE
					LJ -PB	T9131					S/D LOCAL BRKR
					PI -2Y	T2003				VR-3	VR-Pending 16729
1G33-F028	2	A	4	MO	EC -Q	T2001					
	B-8	ACTIVE	GT	C	STC-Q	T2001	14	1,000.0		VR-3	
					LJ -PB	T9424					
					PI -2Y	T2001				VR-3	VR-Pending 16751
1G33-F034	2	A	4	MO	EC -Q	T2001					
	B-6	ACTIVE	GT	C	STC-Q	T2001	13	1,000.0			
					LJ -PB	T9424					
					PI -2Y	T2001					
1G33-F039	2	A	6	MO	EC -CS	T2003				CS-9	
	C-6	ACTIVE	GT	O	STC-CS	T2003	20.7	1,386.0		CS-9/VR-3	
					LJ -PB	T9132					
					PI -2Y	T2003				VR-3	VR-Pending 39164
1G33-F040	2	A	6	MO	EC -CS	T2003				CS-9	
	C-7	ACTIVE	GT	O	STC-CS	T2003	20.5	1,386.0		CS-9/VR-3	
					LJ -PB	T9132					
					PI -2Y	T2003				VR-3	VR-Pending 8480
1G33-F052A	2	C	6	SE	EO -RO	T2002A				RO-4	
	C-2	ACTIVE	CH	O	EC -RO	T2210 (E12)				RO-4	
1G33-F052B	2	C	6	SE	EO -RO	T2002B				RO-4	
	C-2	ACTIVE	CH	O	EC -RO	T2211 (E12)				RO-4	

SYSTEM: REACTOR WATER CLEANUP (G33) DWG. NO. D-302-672

VALVE/ DEVICE NO.	CLASS AND DWG. COOR.	VALVE CATEGORY/ ACTIVE OR PASSIVE	SIZE (in.) AND TYPE	ACTUATOR TYPE/ NORMAL POSITION	TEST REQ. AND FREQ.	SURV INST. NO. SVI-G33	STROKE TIME REFERENCE VALUE(sec)	LEAKAGE LIMIT(sccm gpm or bubbles)	DEVICE SET PRESS. REFERENCE VALUE(psi)	JUSTIFI-CATIONS & RELIEF REQUEST NO.	REMARKS
1G33-F053	2	A	4	MO	EC -CS	T2003				CS-9	
	E-7	ACTIVE	GT	O	STC-CS	T2003	13	1,000.0		CS-9/VR-3	
					LJ -PB	T9419					
					PI -2Y	T2003				VR-3	VR-Pending 44141
1G33-F054	2	A	4	MO	EC -CS	T2003				CS-9	
	E-6	ACTIVE	GT	O	STC-CS	T2003	14	1,000.0		CS-9/VR-3	
					LJ -PB	T9419					
					PI -2Y	T2003				VR-3	VR-Pending 11523
1G33-F646	2	C	¼	SE	RT -10Y	T2100 (GEN)			1600		
	B-7	ACTIVE	RE	C	LJ -PB	T9424		1,000.0			
1G33-F647	03	C	¼	SE	RT -10Y	T2100 (GEN)			1600		
	B-8	ACTIVE	RE	C							

SYSTEM: FUEL POOL COOLING AND CLEANUP (G41) DWG. NO. D-302-651

VALVE/ DEVICE NO.	CLASS AND DWG. COOR.	VALVE CATEGORY/ ACTIVE OR PASSIVE	SIZE (in.) AND TYPE	ACTUATOR TYPE/ NORMAL POSITION	TEST REQ. AND FREQ.	SURV INST. NO. SVI-G41	STROKE TIME REFERENCE VALUE(sec)	LEAKAGE LIMIT(sccm gpm or bubbles)	DEVICE SET PRESS. REFERENCE VALUE(psi)	JUSTIFI-CATIONS & RELIEF REQUEST NO.	REMARKS
1G41-F090	3	B	8	MO	EC -Q	T2001					
	H-13	ACTIVE	BF	O	STC-Q	T2001	28.0*				
					PI -2Y	T2001					
1G41-F100	2	A	8	MO	EC -Q	T2001					
	F-13	ACTIVE	BF	O	STC-Q	T2001	28.0*			VR-3	
					LJ -PB	T9203		1,849.0			
					PI -2Y	T2001				VR-3	VR-Pending 15706
1G41-F140	2	A	10	MO	EC -Q	T2001					
	C-11	ACTIVE	BF	O	STC-Q	T2001	29.0*			VR-3	
					LJ -PB	T9301		2,311.0			
					PI -2Y	T2001				VR-3	VR-Pending 16108
1G41-F145	2	A	10	MO	EC -Q	T2001					
	C-13	ACTIVE	BF	O	STC-Q	T2001	29.0*			VR-3	
					LJ -PB	T9301		2,311.0			
					PI -2Y	T2001				VR-3	VR-Pending 23004
1G41-F522	2	AC	8	SE	EC -CVCM	T9203				RO-13	
	E-13	ACTIVE	CH	O	EO -Q	T2001					
					LJ -PB	T9203		1,849.0			
1G41-F801	2	AC	3/4	SE	SP-2YD	T2101(GEN)					
	C-11	ACTIVE	SD	C	LJ -PB	T9301		2,311.0			

SYSTEM: FUEL POOL COOLING AND CLEANUP (G41) DWG. NO. D-302-654

VALVE/ DEVICE NO.	CLASS AND DWG. COOR.	VALVE CATEGORY/ ACTIVE OR PASSIVE	SIZE (in.) AND TYPE	ACTUATOR TYPE/ NORMAL POSITION	TEST REQ. AND FREQ.	SURV INST. NO. SVI-G41	STROKE TIME REFERENCE VALUE(sec)	LEAKAGE LIMIT(sccm gpm or bubbles)	DEVICE SET PRESS. REFERENCE VALUE(psi)	JUSTIFI-CATIONS & RELIEF REQUEST NO.	REMARKS
G41-F280	3	B	12	MO	EC -Q	T2001					
	C-4	ACTIVE	BF	O	STC-Q	T2001	11.0*				
					PI -2Y	T2001					
G41-F285	3	B	12	MO	EC -Q	T2001					
	C-5	ACTIVE	BF	O	STC-Q	T2001	10.0*				
					PI -2Y	T2001					
G41-F290	3	B	12	MO	EC -Q	T2001					
	C-10	ACTIVE	BF	O	STC-Q	T2001	10.0*				
					PI -2Y	T2001					
G41-F295	3	B	12	MO	EC -Q	T2001					
	C-11	ACTIVE	BF	O	STC-Q	T2001	10.0*				
					PI -2Y	T2001					
G41-F545A	3	C	10	SE	EO -Q	T2001					
	G-11	ACTIVE	CH	C	EC -Q	T2001					
G41-F545B	3	C	10	SE	EO -Q	T2001					
	J-11	ACTIVE	CH	C	EC -Q	T2001					
G41-F548A	3	C	3/4	SE	RT -10Y	T2100 (GEN)		5 dpm	150.0		LOC PROGRAM
	H-5	ACTIVE	RE	C							
G41-F548B	3	C	3/4	SE	RT -10Y	T2100 (GEN)		5 dpm	150.0		LOC PROGRAM
	G-5	ACTIVE	RE	C							

SYSTEM: FUEL POOL COOLING AND CLEANUP (G41) DWG. NO. D-302-655

VALVE/ DEVICE NO.	CLASS AND DWG. COOR.	VALVE CATEGORY/ ACTIVE OR PASSIVE	SIZE (in.) AND TYPE	ACTUATOR TYPE/ NORMAL POSITION	TEST REQ. AND FREQ.	SURV INST. NO. SVI-G41	STROKE TIME REFERENCE VALUE(sec)	LEAKAGE LIMIT(sccm gpm or bubbles)	DEVICE SET PRESS. REFERENCE VALUE(psi)	JUSTIFI-CATIONS & RELIEF REQUEST NO.	REMARKS
G41-F085	3	B	10	MO	EC -Q	T2001					
	G-10	ACTIVE	BF	O	STC-Q	T2001	34.0*				
					PI -2Y	T2001					
G41-F597A	3	C	3	SE	EO -RO	T2002				RO-29	ACOUSTIC
	D-10	ACTIVE	CH	C	EC -RO	T2002				RO-29	MONITORING
G41-F597B	3	C	3	SE	EO -RO	T2002				RO-29	ACOUSTIC
	D-12	ACTIVE	CH	C	EC -RO	T2002				RO-29	MONITORING
G41-F746A	3	C	3/4	SE	RT -10Y	T2100 (GEN)			150.0		
	H-5	ACTIVE	RE	C							

SYSTEM: SUPPRESSION POOL CLEANUP (G42) DWG. NO. D-302-681

VALVE/ DEVICE NO.	CLASS AND DWG. COOR.	VALVE CATEGORY/ ACTIVE OR PASSIVE	SIZE (in.) AND TYPE	ACTUATOR TYPE/ NORMAL POSITION	TEST REQ. AND FREQ.	SURV INST. NO. SVI-G42	STROKE TIME REFERENCE VALUE(sec)	LEAKAGE LIMIT(sccm gpm or bubbles)	DEVICE SET PRESS. REFERENCE VALUE(psi)	JUSTIFI-CATIONS & RELIEF REQUEST NO.	REMARKS
1G42-F010	2	B	12	MO	EC -Q	T2001					
	G-4	ACTIVE	BF	C	STC-Q	T2001	29.7*			VR-3	
					PI -2Y	T2001				VR-3	VR-Pending 16848
1G42-F020	2	B	12	MO	EC -Q	T2001					
	G-5	ACTIVE	BF	C	STC-Q	T2001	29.4*			VR-3	
					PI -2Y	T2001				VR-3	VR-Pending 8641
1G42-F060	3	B	10	MO	EC -Q	T2001					
	G-7	ACTIVE	BF	C	STC-Q	T2001	28.0*				
					PI -2Y	T2001					
1G42-F080	3	B	8	MO	EC -Q	T2001					
	E-11	ACTIVE	BF	C	STC-Q	T2001	28.0*				
					PI -2Y	T2001					

SYSTEM: SUPPRESSION POOL MAKEUP (G43) DWG. NO. D-302-686

VALVE/ DEVICE NO.	CLASS AND DWG. COOR.	VALVE CATEGORY/ ACTIVE OR PASSIVE	SIZE (in.) AND TYPE	ACTUATOR TYPE/ NORMAL POSITION	TEST REQ. AND FREQ.	SURV INST. NO. SVI-G43	STROKE TIME REFERENCE VALUE(sec)	LEAKAGE LIMIT(sccm gpm or bubbles)	DEVICE SET PRESS. REFERENCE VALUE(psi)	JUSTIFI-CATIONS & RELIEF REQUEST NO.	REMARKS
1G43-F030A	2	B	24	MO	EO -Q	T2001					
	E-9	ACTIVE	BF	C	STO-Q	T2001	29.0			VR-3	
					PI -2Y	T2001				VR-3	VR-Pending 16020
1G43-F030B	2	B	24	MO	EO -Q	T2001					
	B-9	ACTIVE	BF	C	STO-Q	T2001	30.0			VR-3	
					PI -2Y	T2001				VR-3	VR-Pending 16042
1G43-F040A	2	B	24	MO	EO -Q	T2001					
	F-9	ACTIVE	BF	C	STO-Q	T2001	33.0			VR-3	
					PI -2Y	T2001				VR-3	VR-Pending 16044
1G43-F040B	2	B	24	MO	EO -Q	T2001					
	B-8	ACTIVE	BF	C	STO-Q	T2001	29.0			VR-3	
					PI -2Y	T2001				VR-3	VR-Pending 16046
1G43-F050A	2	A	3/4	SO	EO -Q	T2001					CONTAINMENT
	H-8	ACTIVE	GL	O	EC -Q	T2001					INSTRUMENT
					STO-Q	T2001	2.0*				LINE, LEAKAGE
					STC-Q	T2001	2.0*				EQUIVALENT
					FS -Q	T2001					TO 0.5 gpm
					LD -2Y	T2002		1,890.0			
					PI -2Y	T2002					
1G43-F050B	2	A	3/4	SO	EO -Q	T2001					CONTAINMENT
	H-13	ACTIVE	GL	O	EC -Q	T2001					INSTRUMENT
					STO-Q	T2001	2.0*				LINE, LEAKAGE
					STC-Q	T2001	2.0*				EQUIVALENT
					FS -Q	T2001					TO 0.5 gpm
					LD -2Y	T2002		1,890.0			
					PI -2Y	T2002					

SYSTEM: SUPPRESSION POOL MAKEUP (G43) DWG. NO. D-302-686

VALVE/ DEVICE NO.	CLASS AND DWG. COOR.	VALVE CATEGORY/ ACTIVE OR PASSIVE	SIZE (in.) AND TYPE	ACTUATOR TYPE/ NORMAL POSITION	TEST REQ. AND FREQ.	SURV INST. NO. SVI-G43	STROKE TIME REFERENCE VALUE(sec)	LEAKAGE LIMIT(sccm gpm or bubbles)	DEVICE SET PRESS. REFERENCE VALUE(psi)	JUSTIFI-CATIONS & RELIEF REQUEST NO.	REMARKS
1G43-F060	2	A	3/4	SO	EO -Q	T2001					CONTAINMENT
	H-5	ACTIVE	GL	O	EC -Q	T2001					INSTRUMENT
					STO-Q	T2001	2.0*				LINE, LEAKAGE
					STC-Q	T2001	2.0*				EQUIVALENT
					FS -Q	T2001					TO 0.5 gpm
					LD -2Y	T2002		1,890.0			
					PI -2Y	T2002					
1G43-F508A	2	C	2	SE	EO -Q	T2003					FOR THERMAL
	E-9	ACTIVE	CH	C	EC -Q	T2003					EXPANSION
1G43-F508B	2	C	2	SE	EO -Q	T2003					FOR THERMAL
	C-9	ACTIVE	CH	C	EC -Q	T2003					EXPANSION

SYSTEM: LIQUID RADWASTE (G50) DWG. NO. D-302-737

VALVE/ DEVICE NO.	CLASS AND DWG. COOR.	VALVE CATEGORY/ ACTIVE OR PASSIVE	SIZE (in.) AND TYPE	ACTUATOR TYPE/ NORMAL POSITION	TEST REQ. AND FREQ.	SURV INST. NO. SVI-G50	STROKE TIME REFERENCE VALUE(sec)	LEAKAGE LIMIT(sccm gpm or bubbles)	DEVICE SET PRESS. REFERENCE VALUE(psi)	JUSTIFI-CATIONS & RELIEF REQUEST NO.	REMARKS
1G50-F272	2	A	4	MO	EC -Q	T2001					
	E-11	ACTIVE	GT	O	STC-Q	T2001	16.7*			VR-3	
					LJ -PB	T9420		1,000.0			
					PI -2Y	T2001				VR-3	VR-Pending 17539
1G50-F277	2	A	4	MO	EC -Q	T2001					
	E-10	ACTIVE	GT	O	STC-Q	T2001	15.0*			VR-3	
					LJ -PB	T9420		1,000.0			
					PI -2Y	T2001				VR-3	VR-Pending 17561
1G50-F823	2	AC	1/4	SE	RT-10Y	T2100(GEN)			150 ±25		
	D-10	ACTIVE	RE	C	LJ -PB	T9420		1,000.0			

SYSTEM: LIQUID RADWASTE SUMPS (G61) DWG. NO. D-302-739

VALVE/ DEVICE NO.	CLASS AND DWG. COOR.	VALVE CATEGORY/ ACTIVE OR PASSIVE	SIZE (in.) AND TYPE	ACTUATOR TYPE/ NORMAL POSITION	TEST REQ. AND FREQ.	SURV INST. NO. SVI-G61	STROKE TIME REFERENCE VALUE(sec)	LEAKAGE LIMIT(sccm gpm or bubbles)	DEVICE SET PRESS. REFERENCE VALUE(psi)	JUSTIFI-CATIONS & RELIEF REQUEST NO.	REMARKS
1G61-F030	O2	B	2 1/2	MO	EC -Q	T2001					
	A-9	ACTIVE	GT	O	STC-Q	T2001	16.0*			VR-3	
					PI -2Y	T2001				VR-3	VR-Pending 18020
1G61-F035	O2	B	2 1/2	MO	EC -Q	T2001					
	A-8	ACTIVE	GT	O	STC-Q	T2001	15.2*			VR-3	
					PI -2Y	T2001				VR-3	VR-Pending 9220
1G61-F075	2	A	3	MO	EC -Q	T2001					
	C-6	ACTIVE	GT	O	STC-Q	T2001	17.4*			VR-3	
					LJ -PB	T9417		1,000.0			
					PI -2Y	T2001				VR-3	VR-Pending 16132
1G61-F080	2	A	3	MO	EC -Q	T2001					
	C-5	ACTIVE	GT	O	STC-Q	T2001	16.0*			VR-3	
					LJ -PB	T9417		1,000.0			
					PI -2Y	T2001				VR-3	VR-Pending 26084
1G61-F655	2	AC	1/4	SE	SP -2YD	T2101 (GEN)		100.0			
	C-6	ACTIVE	SD	C	LJ -PB	T9417		1,000.0			

SYSTEM: LIQUID RADWASTE SUMPS (G61) DWG. NO. D-302-740

VALVE/ DEVICE NO.	CLASS AND DWG. COOR.	VALVE CATEGORY/ ACTIVE OR PASSIVE	SIZE (in.) AND TYPE	ACTUATOR TYPE/ NORMAL POSITION	TEST REQ. AND FREQ.	SURV INST. NO. SVI-G61	STROKE TIME REFERENCE VALUE(sec)	LEAKAGE LIMIT(sccm gpm or bubbles)	DEVICE SET PRESS. REFERENCE VALUE(psi)	JUSTIFI-CATIONS & RELIEF REQUEST NO.	REMARKS
1G61-F150	O2	B	2 1/2	MO	EC -Q	T2001					
	B-10	ACTIVE	GT	O	STC-Q	T2001	16.0*			VR-3	
					PI -2Y	T2001				VR-3	VR-Pending 32021
1G61-F155	O2	B	2 1/2	MO	EC -Q	T2001					
	B-9	ACTIVE	GT	O	STC-Q	T2001	15.0*			VR-3	
					PI -2Y	T2001				VR-3	VR-Pending 32024
1G61-F165	2	A	3	MO	EC -Q	T2001					
	B-7	ACTIVE	GT	O	STC-Q	T2001	17.6*			VR-3	
					LJ -PB	T9418		1,000.0			
					PI -2Y	T2001				VR-3	VR-Pending 16134
1G61-F170	2	A	3	MO	EC -Q	T2001					
	B-6	ACTIVE	GT	O	STC-Q	T2001	16.0*			VR-3	
					LJ -PB	T9418		1,000.0			
					PI -2Y	T2001				VR-3	VR-Pending 16138
1G61-F657	2	AC	3/4	SE	SP-2YD	T2101(GEN)					
	B-7	ACTIVE	SD	C	LJ -PB	T9418		1,000.0			

SYSTEM: CONTAINMENT VESSEL AND DRYWELL PURGE (M14) DWG. NO. D-912-604

VALVE/ DEVICE NO.	CLASS AND DWG. COOR.	VALVE CATEGORY/ ACTIVE OR PASSIVE	SIZE (in.) AND TYPE	ACTUATOR TYPE/ NORMAL POSITION	TEST REQ. AND FREQ.	SURV INST. NO. SVI-M14	STROKE TIME REFERENCE VALUE(sec)	LEAKAGE LIMIT(sccm gpm or bubbles)	DEVICE SET PRESS. REFERENCE VALUE(psi)	JUSTIFI-CATIONS & RELIEF REQUEST NO.	REMARKS
1M14-F040	2	A	42	AO	EC -Q	T2001					
	C-8	ACTIVE	BF	C	STC-Q	T2001	3.5				
					FS -Q	T2001					
					LJ -Q	T9313		4,310.0			
					PI -2Y	T2001					
1M14-F045	2	A	42	AO	EC -R0	T2003				RO-28	ADMINISTRATIVE
	C-9	ACTIVE	BF	C	STC-R0	T2003	4.0			RO-28	SEALED WITH
					FS -R0	T2003				RO-28	KEYLOCK SW IN
					LJ -Q	T9313		4,310.0			MODES 1, 2 & 3
					PI -2Y	T2003					
1M14-F055A	O2	B	24	AO	EC -R0	T2003				RO-28	ADMINISTRATIVE
	G-13	ACTIVE	BF	C	STC-R0	T2003	2.0			RO-28	SEALED WITH
					FS -R0	T2003				RO-28	KEYLOCK SW IN
					PI -2Y	T2003					MODES 1, 2 & 3
1M14-F055B	O2	B	24	AO	EC -R0	T2003				RO-28	ADMINISTRATIVE
	G-10	ACTIVE	BF	C	STC-R0	T2003	2.4			RO-28	SEALED WITH
					FS -R0	T2003				RO-28	KEYLOCK SW IN
					PI -2Y	T2003					MODES 1, 2 & 3
1M14-F060A	O2	B	24	AO	EC -R0	T2003				RO-28	ADMINISTRATIVE
	J-13	ACTIVE	BF	C	STC-R0	T2003	2.4			RO-28	SEALED WITH
					FS -R0	T2003				RO-28	KEYLOCK SW IN
					PI -2Y	T2003					MODES 1, 2 & 3

SYSTEM: CONTAINMENT VESSEL AND DRYWELL PURGE (M14) DWG. NO. D-912-604

VALVE/ DEVICE NO.	CLASS AND DWG. COOR.	VALVE CATEGORY/ ACTIVE OR PASSIVE	SIZE (in.) AND TYPE	ACTUATOR TYPE/ NORMAL POSITION	TEST REQ. AND FREQ.	SURV INST. NO. SVI-M14	STROKE TIME REFERENCE VALUE(sec)	LEAKAGE LIMIT(sccm gpm or bubbles)	DEVICE SET PRESS. REFERENCE VALUE(psi)	JUSTIFI-CATIONS & RELIEF REQUEST NO.	REMARKS
1M14-F060B	O2	B	24	AO	EC -R0	T2003				RO-28	ADMINISTRATIVE
	J-10	ACTIVE	BF	C	STC-R0	T2003	3.0			RO-28	SEALED WITH
					FS -R0	T2003				RO-28	KEYLOCK SW IN
					PI -2Y	T2003					MODES 1, 2 & 3
1M14-F065	O2	B	36	AO	EC -R0	T2003				RO-28	ADMINISTRATIVE
	F-13	ACTIVE	BF	C	STC-R0	T2003	4.0			RO-28	SEALED WITH
					FS -R0	T2003				RO-28	KEYLOCK SW IN
					PI -2Y	T2003					MODES 1, 2 & 3
1M14-F070	O2	B	36	AO	EC -R0	T2003				RO-28	ADMINISTRATIVE
	F-11	ACTIVE	BF	C	STC-R0	T2003	3.3			RO-28	SEALED WITH
					FS -R0	T2003				RO-28	KEYLOCK SW IN
					PI -2Y	T2003					MODES 1, 2 & 3
1M14-F085	2	A	42	AO	EC -R0	T2003				RO-28	ADMINISTRATIVE
	F-9	ACTIVE	BF	C	STC-R0	T2003	3.0			RO-28	SEALED WITH
					FS -R0	T2003				RO-28	KEYLOCK SW IN
					LJ -Q	T9314		4,310.0			MODES 1, 2 & 3
					PI -2Y	T2003					
1M14-F090	2	A	42	AO	EC -Q	T2001					
	G-8	ACTIVE	BF	C	STC-Q	T2001	3.0				
					FS -Q	T2001					
					LJ -Q	T9314		4,310.0			
					PI -2Y	T2001					

SYSTEM: CONTAINMENT VESSEL AND DRYWELL PURGE (M14) DWG. NO. D-912-604

VALVE/ DEVICE NO.	CLASS AND DWG. COOR.	VALVE CATEGORY/ ACTIVE OR PASSIVE	SIZE (in.) AND TYPE	ACTUATOR TYPE/ NORMAL POSITION	TEST REQ. AND FREQ.	SURV INST. NO. SVI-M14	STROKE TIME REFERENCE VALUE(sec)	LEAKAGE LIMIT(sccm gpm or bubbles)	DEVICE SET PRESS. REFERENCE VALUE(psi)	JUSTIFI-CATIONS & RELIEF REQUEST NO.	REMARKS
1M14-F190	2	A	18	AO	EC -Q	T2001					
	C-9	ACTIVE	BF	C	STC-Q	T2001	2.3				
					FS -Q	T2001					
					LJ -Q	T9313		4,310.0			
					PI -2Y	T2001					
1M14-F195	2	A	18	AO	EC -Q	T2001					
	C-10	ACTIVE	BF	C	STC-Q	T2001	2.0				
					FS -Q	T2001					
					LJ -Q	T9313		4,310.0			
					PI -2Y	T2001					
1M14-F200	2	A	18	AO	EC -Q	T2001					
	E-9	ACTIVE	BF	C	STC-Q	T2001	3.0				
					FS -Q	T2001					
					LJ -Q	T9314		4,310.0			
					PI -2Y	T2001					
1M14-F205	2	A	18	AO	EC -Q	T2001					
	E-10	ACTIVE	BF	C	STC-Q	T2001	2.0				
					FS -Q	T2001					
					LJ -Q	T9314		4,310.0			
					PI -2Y	T2001					

SYSTEM: DRYWELL (M16) AND CONTAINMENT VACUUM RELIEF (M17) DWG. NO. D-912-606

VALVE/ DEVICE NO.	CLASS AND DWG. COOR.	VALVE CATEGORY/ ACTIVE OR PASSIVE	SIZE (in.) AND TYPE	ACTUATOR TYPE/ NORMAL POSITION	TEST REQ. AND FREQ.	SURV INST. NO. SVI-M17	STROKE TIME REFERENCE VALUE(sec)	LEAKAGE LIMIT(sccm gpm or bubbles)	DEVICE SET PRESS. REFERENCE VALUE(psi)	JUSTIFI-CATIONS & RELIEF REQUEST NO.	REMARKS
1M16-F010A	O2	B	10	MO	EO -M	T2001 (M16)					NOTE 5
	H-8	ACTIVE	BF	C	EC -M	T2001 (M16)					
					STO-M	T2001 (M16)	5.0			VR-3	
					STC-M	T2001 (M16)	5.0*			VR-3	
					PI -PI	T2001 (M16)				VR-3	
1M16-F010B	O2	B	10	MO	EO -M	T2001 (M16)					NOTE 5
	H-5	ACTIVE	BF	C	EC -M	T2001 (M16)					
					STO-M	T2001 (M16)	5.0			VR-3	
					STC-M	T2001 (M16)	5.0*			VR-3	
					PI -PI	T2001 (M16)				VR-3	
1M16-F020A	O2	C	10	SE/AO	SP -2YD	T0414 (M16)					TESTABLE
	H-8	ACTIVE	SD	C							VACUUM BREAKER
1M16-F020B	O2	C	10	SE/AO	SP -2YD	T0414 (M16)					TESTABLE
	H-4	ACTIVE	SD	C							VACUUM BREAKER
1M17-F010	2	AC	24	SE/AO	SP -2YD	T0408					TSTBL VAC BRKR
	B-13	ACTIVE	SD	C	LJ -PB	T9114		4,159.0			EC/EO MONTHLY
1M17-F015	2	A	24	MO	EO -M	T2002					NOTE 5
	B-12	ACTIVE	BF	O	EC -M	T2002					
					STO-M	T2002	5.0			VR-3	
					STC-M	T2002	5.0*			VR-3	
					LJ -PB	T9114		4,159.0			
					PI -PI	T2002				VR-3	
1M17-F020	2	AC	24	SE/AO	SP -2YD	T0408					TSTBL VAC BRKR
	D-13	ACTIVE	SD	C	LJ -PB	T9208		4,159.0			EC/EO MONTHLY

SYSTEM: DRYWELL (M16) AND CONTAINMENT VACUUM RELIEF (M17) DWG. NO. D-912-606

VALVE/ DEVICE NO.	CLASS AND DWG. COOR.	VALVE CATEGORY/ ACTIVE OR PASSIVE	SIZE (in.) AND TYPE	ACTUATOR TYPE/ NORMAL POSITION	TEST REQ. AND FREQ.	SURV INST. NO. SVI-M17	STROKE TIME REFERENCE VALUE(sec)	LEAKAGE LIMIT(sccm gpm or bubbles)	DEVICE SET PRESS. REFERENCE VALUE(psi)	JUSTIFI-CATIONS & RELIEF REQUEST NO.	REMARKS
1M17-F025	2	A	24	MO	EO -M	T2002					NOTE 5
	D-12	ACTIVE	BF	O	EC -M	T2002					
					STO-M	T2002	5.0			VR-3	
					STC-M	T2002	5.0*			VR-3	
					LJ -PB	T9208		4,159.0			
					PI -PI	T2002				VR-3	
1M17-F030	2	AC	24	SE/AO	SP -2YD	T0408					TSTBL VAC BRKR
	G-13	ACTIVE	SD	C	LJ -PB	T9428		4,159.0			EC/EO MONTHLY
1M17-F035	2	A	24	MO	EO -M	T2002					NOTE 5
	G-12	ACTIVE	BF	O	EC -M	T2002					
					STO-M	T2002	5.0			VR-3	
					STC-M	T2002	5.0*			VR-3	
					LJ -PB	T9428		4,159.0			
					PI -PI	T2002				VR-3	
1M17-F040	2	AC	24	SE/AO	SP -2YD	T0408					TSTBL VAC BRKR
	J-13	ACTIVE	SD	C	LJ -PB	T9436		4,159.0			EC/EO MONTHLY
1M17-F045	2	A	24	MO	EO -M	T2002					NOTE 5
	J-12	ACTIVE	BF	O	EC -M	T2002					
					STO-M	T2002	5.0			VR-3	
					STC-M	T2002	5.0*			VR-3	
					LJ -PB	T9436		4,159.0			
					PI -PI	T2002				VR-3	

SYSTEM: DRYWELL (M16) AND CONTAINMENT VACUUM RELIEF (M17) DWG. NO. D-912-606

VALVE/ DEVICE NO.	CLASS AND DWG. COOR.	VALVE CATEGORY/ ACTIVE OR PASSIVE	SIZE (in.) AND TYPE	ACTUATOR TYPE/ NORMAL POSITION	TEST REQ. AND FREQ.	SURV INST. NO. SVI-M17	STROKE TIME REFERENCE VALUE(sec)	LEAKAGE LIMIT(sccm gpm or bubbles)	DEVICE SET PRESS. REFERENCE VALUE(psi)	JUSTIFI-CATIONS & RELIEF REQUEST NO.	REMARKS
1M17-F055	2	A	3/4	SO	EC -Q	T2001					
	D-9	ACTIVE	GL	O	STC-Q	T2001	2.0				
					FS -Q	T2001					
					LD 2Y	T2003		1,000.0			
					PI -2Y	T2003					
1M17-F065	2	A	3/4	SO	EC -Q	T2001					
	D-4	ACTIVE	GL	O	STC-Q	T2001	2.0				
					FS -Q	T2001					
					LD 2Y	T2003		1,000.0			
					PI -2Y	T2003					

VALVE/ DEVICE NO.	CLASS AND DWG. COOR.	VALVE CATEGORY/ ACTIVE OR PASSIVE	SIZE (in.) AND TYPE	ACTUATOR TYPE/ NORMAL POSITION	TEST REQ. AND FREQ.	SURV INST. NO. SVI-M51	STROKE TIME REFERENCE VALUE(sec)	LEAKAGE LIMIT(sccm gpm or bubbles)	DEVICE SET PRESS. REFERENCE VALUE(psi)	JUSTIFI-CATIONS & RELIEF REQUEST NO.	REMARKS
1M51-F010A	2	B	4	MO	EC -Q	T2001					
	B-12	ACTIVE	GL	C	STO-Q	T2001	28.9*			VR-3	
					STC-Q	T2001	28.1*			VR-3	
					PI -2Y	T2001				VR-3	VR-Pending 23107
1M51-F010B	2	B	4	MO	EC -Q	T2001					
	F-12	ACTIVE	GL	C	STO-Q	T2001	29.3*			VR-3	
					STC-Q	T2001	28.7*			VR-3	
					PI -2Y	T2001				VR-3	VR-Pending 23110
1M51-F020A	2	B	2	MO	EO -Q	T2001					
	A-9	ACTIVE	GL	C	STO-Q	T2001	14.1*			VR-3	
					PI -2Y	T2001				VR-3	VR-Pending 23213
1M51-F020B	2	B	2	MO	EO -Q	T2001					
	E-9	ACTIVE	GL	C	STO-Q	T2001	15.0*			VR-3	
					PI -2Y	T2001				VR-3	VR-Pending 23109
1M51-F090	2	A	2	MO	EC -Q	T2001					
	J-8	ACTIVE	GL	C	STC-Q	T2001	15.0*			VR-3	
					LJ -PB	T9302		1,000.0			
					PI -2Y	T2001				VR-3	VR-Pending 23124
1M51-F110	2	A	2	MO	EC -Q	T2001					
	J-6	ACTIVE	GL	C	STC-Q	T2001	10.0*			VR-3	
					LJ -PB	T9302		1,000.0			
					PI -2Y	T2001				VR-3	VR-Pending 23148
1M51-F501A	2	C	4	SE	EO -Q	T2003A					
	B-11	ACTIVE	CH	C	EC -Q	T2003A					
1M51-F501B	2	C	4	SE	EO -Q	T2003B					
	F-11	ACTIVE	CH	C	EC -Q	T2003B					

VALVE/ DEVICE NO.	CLASS AND DWG. COOR.	VALVE CATEGORY/ ACTIVE OR PASSIVE	SIZE (in.) AND TYPE	ACTUATOR TYPE/ NORMAL POSITION	TEST REQ. AND FREQ.	SURV INST. NO. SVI-M51	STROKE TIME REFERENCE VALUE(sec)	LEAKAGE LIMIT(sccm gpm or bubbles)	DEVICE SET PRESS. REFERENCE VALUE(psi)	JUSTIFI-CATIONS & RELIEF REQUEST NO.	REMARKS
1M51-F210A	2	A	1/2	SO	EO -Q	T2001					CONTAINMENT
	E-5	ACTIVE	GL	C	EC -Q	T2001					INSTRUMENT
					STO-Q	T2001	2.0*				LINE, SOLENOID
					STC-Q	T2001	2.0*				OPEN & CLOSED
					LJ -PB	T9425		1,000.0			
					PI -2Y	T9425/T2007A					
1M51-F210B	2	A	1/2	SO	EO -Q	T2001					CONTAINMENT
	E-11	ACTIVE	GL	C	EC -Q	T2001					INSTRUMENT
					STO-Q	T2001	2.0*				LINE, SOLENOID
					STC-Q	T2001	2.0*				OPEN & CLOSED
					LJ -PB	T9318		1,000.0			
					PI -2Y	T9318/T2007B					
1M51-F220A	2	A	1/2	SO	EO -Q	T2001					CONTAINMENT
	F-5	ACTIVE	GL	C	EC -Q	T2001					INSTRUMENT
					STO-Q	T2001	2.0*				LINE, SOLENOID
					STC-Q	T2001	2.0*				OPEN & CLOSED
					LJ -PB	T9425		1,000.0			
					PI -2Y	T9425/T2007A					
1M51-F220B	2	A	1/2	SO	EO -Q	T2001					CONTAINMENT
	F-11	ACTIVE	GL	C	EC -Q	T2001					INSTRUMENT
					STO-Q	T2001	2.0*				LINE, SOLENOID
					STC-Q	T2001	2.0*				OPEN & CLOSED
					LJ -PB	T9318		1,000.0			
					PI -2Y	T9318/T2007B					

VALVE/ DEVICE NO.	CLASS AND DWG. COOR.	VALVE CATEGORY/ ACTIVE OR PASSIVE	SIZE (in.) AND TYPE	ACTUATOR TYPE/ NORMAL POSITION	TEST REQ. AND FREQ.	SURV INST. NO. SVI-M51	STROKE TIME REFERENCE VALUE(sec)	LEAKAGE LIMIT(sccm gpm or bubbles)	DEVICE SET PRESS. REFERENCE VALUE(psi)	JUSTIFI-CATIONS & RELIEF REQUEST NO.	REMARKS
1M51-F230A	2	A	1/2	SO	EO -Q	T2001					CONTAINMENT
	F-5	ACTIVE	GL	C	EC -Q	T2001					INSTRUMENT
					STO-Q	T2001	2.0*				LINE, SOLENOID
					STC-Q	T2001	2.0*				OPEN & CLOSED
					LJ -PB	T9425		1,000.0			
					PI -2Y	T9425/T2007A					
1M51-F230B	2	A	1/2	SO	EO -Q	T2001					CONTAINMENT
	F-11	ACTIVE	GL	C	EC -Q	T2001					INSTRUMENT
					STO-Q	T2001	2.0*				LINE, SOLENOID
					STC-Q	T2001	2.0*				OPEN & CLOSED
					LJ -PB	T9318		1,000.0			
					PI -2Y	T9318/T2007B					
1M51-F240A	2	A	1/2	SO	EO -Q	T2001					CONTAINMENT
	G-5	ACTIVE	GL	C	EC -Q	T2001					INSTRUMENT
					STO-Q	T2001	2.0*				LINE, SOLENOID
					STC-Q	T2001	2.0*				OPEN & CLOSED
					LJ -PB	T9425		1,000.0			
					PI -2Y	T9425/T2007A					
1M51-F240B	2	A	1/2	SO	EO -Q	T2001					CONTAINMENT
	G-11	ACTIVE	GL	C	EC -Q	T2001					INSTRUMENT
					STO-Q	T2001	2.0*				LINE, SOLENOID
					STC-Q	T2001	2.0*				OPEN & CLOSED
					LJ -PB	T9318		1,000.0			
					PI -2Y	T9318/T2007B					

SYSTEM: COMBUSTIBLE GAS CONTROL (M51) DWG. NO. D-302-832

VALVE/ DEVICE NO.	CLASS AND DWG. COOR.	VALVE CATEGORY/ ACTIVE OR PASSIVE	SIZE (in.) AND TYPE	ACTUATOR TYPE/ NORMAL POSITION	TEST REQ. AND FREQ.	SURV INST. NO. SVI-M51	STROKE TIME REFERENCE VALUE(sec)	LEAKAGE LIMIT(sccm gpm or bubbles)	DEVICE SET PRESS. REFERENCE VALUE(psi)	JUSTIFI-CATIONS & RELIEF REQUEST NO.	REMARKS
1M51-F250A	2	A	1/2	SO	EO -Q	T2001					CONTAINMENT
	G-5	ACTIVE	GL	C	EC -Q	T2001					INSTRUMENT
					STO-Q	T2001	2.0*				LINE, SOLENOID
					STC-Q	T2001	2.0*				OPEN & CLOSED
					LJ -PB	T9425		1,000.0			
					PI -2Y	T9425/T2007A					
1M51-F250B	2	A	1/2	SO	EO -Q	T2001					CONTAINMENT
	G-11	ACTIVE	GL	C	EC -Q	T2001					INSTRUMENT
					STO-Q	T2001	2.0*				LINE, SOLENOID
					STC-Q	T2001	2.0*				OPEN & CLOSED
					LJ -PB	T9318		1,000.0			
					PI -2Y	T9318/T2007B					
1M51-F260A	3	B	3/4	SO	EC -Q	T2004					SOLENOID OPEN
	E-4	ACTIVE	GL	O	STC-Q	T2004	2.0*				AND CLOSED
					PI -2Y	T2004					
1M51-F260B	3	B	3/4	SO	EC -Q	T2004					SOLENOID OPEN
	E-13	ACTIVE	GL	O	STC-Q	T2004	2.0*				AND CLOSED
					PI -2Y	T2004					
1M51-F270A	3	B	3/4	SO	EC -Q	T2004					SOLENOID OPEN
	D-4	ACTIVE	GL	O	STC-Q	T2004	2.0*				AND CLOSED
					PI -2Y	T2004					
1M51-F270B	3	B	3/4	SO	EC -Q	T2004					SOLENOID OPEN
	D-13	ACTIVE	GL	O	STC-Q	T2004	2.0*				AND CLOSED
					PI -2Y	T2004					

SYSTEM: COMBUSTIBLE GAS CONTROL (M51) DWG. NO. D-302-832

VALVE/ DEVICE NO.	CLASS AND DWG. COOR.	VALVE CATEGORY/ ACTIVE OR PASSIVE	SIZE (in.) AND TYPE	ACTUATOR TYPE/ NORMAL POSITION	TEST REQ. AND FREQ.	SURV INST. NO. SVI-M51	STROKE TIME REFERENCE VALUE(sec)	LEAKAGE LIMIT(sccm gpm or bubbles)	DEVICE SET PRESS. REFERENCE VALUE(psi)	JUSTIFI-CATIONS & RELIEF REQUEST NO.	REMARKS
1M51-F531A	2	C	1	SE	EO -RO	T2006				RO-8	
	F-7	ACTIVE	CH	O	EC -RO	T2005				RO-8	
1M51-F531B	2	C	1	SE	EO -RO	T2006				RO-8	
	F-9	ACTIVE	CH	O	EC -RO	T2005				RO-8	
1M51-F532A	2	C	1	SE	EO -RO	T2006				RO-8	
	G-7	ACTIVE	CH	O	EC -RO	T2005				RO-8	
1M51-F532B	2	C	1	SE	EO -RO	T2006				RO-8	
	G-9	ACTIVE	CH	O	EC -RO	T2005				RO-8	
1M51-F618A	2	C	1	SE	EO -RO	T2006				RO-8	
	F-7	ACTIVE	CH	O	EC -RO	T2005				RO-8	
1M51-F618B	2	C	1	SE	EO -RO	T2006				RO-8	
	F-10	ACTIVE	CH	O	EC -RO	T2005				RO-8	

SYSTEM: MAIN STEAM (N11) DWG. NO. D-302-011

VALVE/ DEVICE NO.	CLASS AND DWG. COOR.	VALVE CATEGORY/ ACTIVE OR PASSIVE	SIZE (in.) AND TYPE	ACTUATOR TYPE/ NORMAL POSITION	TEST REQ. AND FREQ.	SURV INST. NO. SVI-N11	STROKE TIME REFERENCE VALUE(sec)	LEAKAGE LIMIT(sccm gpm or bubbles)	DEVICE SET PRESS. REFERENCE VALUE(psi)	JUSTIFI-CATIONS & RELIEF REQUEST NO.	REMARKS
1N11-F020A	2	B	28	MO	EO -CS	T2001				CS-2	
	D-13	ACTIVE	GT	O	EC -CS	T2001				CS-2	
					STO-CS	T2001	104.6*			CS-2/VR-3	
					STC-CS	T2001	101.9*			CS-2/VR-3	
					PI -2Y	T2001				VR-3	VR-Pending 9214
1N11-F020B	2	B	28	MO	EO -CS	T2001				CS-2	
	G-13	ACTIVE	GT	O	EC -CS	T2001				CS-2	
					STO-CS	T2001	100.8*			CS-2/VR-3	
					STC-CS	T2001	99.4*			CS-2/VR-3	
					PI -2Y	T2001				VR-3	VR-Pending 11497
1N11-F020C	2	B	28	MO	EO -CS	T2001				CS-2	
	C-13	ACTIVE	GT	O	EC -CS	T2001				CS-2	
					STO-CS	T2001	103.0*			CS-2/VR-3	
					STC-CS	T2001	100.0*			CS-2/VR-3	
					PI -2Y	T2001				VR-3	VR-Pending 8774
1N11-F020D	2	B	28	MO	EO -CS	T2001				CS-2	
	F-13	ACTIVE	GT	O	EC -CS	T2001				CS-2	
					STO-CS	T2001	100.2*			CS-2/VR-3	
					STC-CS	T2001	100.1*			CS-2/VR-3	
					PI -2Y	T2001				VR-3	VR-Pending 15050

VALVE/ DEVICE NO.	CLASS AND DWG. COOR.	VALVE CATEGORY/ ACTIVE OR PASSIVE	SIZE (in.) AND TYPE	ACTUATOR TYPE/ NORMAL POSITION	TEST REQ. AND FREQ.	SURV INST. NO. SVI-N22	STROKE TIME REFERENCE VALUE(sec)	LEAKAGE LIMIT(sccm gpm or bubbles)	DEVICE SET PRESS. REFERENCE VALUE(psi)	JUSTIFI-CATIONS & RELIEF REQUEST NO.	REMARKS
1N22-F420A	2	B	1 1/2	AO	EO -Q	T2001					
	D-6	ACTIVE	GL	C	EC -Q	T2001					
					STO-Q	T2001	8.3*				
					STC-Q	T2001	4.1*				
					FS -Q	T2001					
					PI -2Y	T2001					
1N22-F420B	2	B	1 1/2	AO	EO -Q	T2001					
	D-5	ACTIVE	GL	C	EC -Q	T2001					
					STO-Q	T2001	4.4*				
					STC-Q	T2001	6.0*				
					FS -Q	T2001					
					PI -2Y	T2001					
1N22-F420C	2	B	1 1/2	AO	EO -Q	T2001					
	D-6	ACTIVE	GL	C	EC -Q	T2001					
					STO-Q	T2001	5.9*				
					STC-Q	T2001	4.5*				
					FS -Q	T2001					
					PI -2Y	T2001					
1N22-F420D	2	B	1 1/2	AO	EO -Q	T2001					
	D-5	ACTIVE	GL	C	EC -Q	T2001					
					STO-Q	T2001	4.5*				
					STC-Q	T2001	3.8*				
					FS -Q	T2001					
					PI -2Y	T2001					

VALVE/ DEVICE NO.	CLASS AND DWG. COOR.	VALVE CATEGORY/ ACTIVE OR PASSIVE	SIZE (in.) AND TYPE	ACTUATOR TYPE/ NORMAL POSITION	TEST REQ. AND FREQ.	SURV INST. NO. SVI-N27	STROKE TIME REFERENCE VALUE(sec)	LEAKAGE LIMIT(sccm gpm or bubbles)	DEVICE SET PRESS. REFERENCE VALUE(psi)	JUSTIFI-CATIONS & RELIEF REQUEST NO.	REMARKS
1B21-F032A	1	AC	20	SE	EO -Q	T2001 (GEN)					Note 9
	B-8	ACTIVE	CH	O	EC -RO	T2005 (GEN)				RO-13	
					LD -2Y	P9121 (PTI)		200.0			
1B21-F032B	1	AC	20	SE	EO -Q	T2001 (GEN)					Note 9
	C-8	ACTIVE	CH	O	EC -RO	T2005 (GEN)				RO-13	
					LD -2Y	P9414 (PTI)		200.0			
1B21-F065A	2	A	20	MO	EC -CS	T2004 (B21)				CS-1	SEAT LEAKAGE
	B-12	ACTIVE	GT	O	STC-CS	T2004 (B21)	75.0			CS-1/VR-3	INCLUDED IN
					LD -2Y	T7121		3.0 GPH			LOC TOTALS
					PI -2Y	T2004 (B21)				VR-3	VR-Pending 16819
1B21-F065B	2	A	20	MO	EC -CS	T2004 (B21)				CS-1	SEAT LEAKAGE
	D-11	ACTIVE	GT	O	STC-CS	T2004 (B21)	72.6			CS-1/VR-3	INCLUDED IN
					LD -2Y	T7414		3.0 GPH			LOC TOTALS
					PI -2Y	T2004 (B21)				VR-3	VR-Pending 14814
1N27-F559A	1	AC	20	SE	EO -Q	T2001 (GEN)					Note 9
	B-6	ACTIVE	CH	O	EC -RO	T2005 (GEN)				RO-13	
					LD -2Y	P9121 (PTI)		200.0			
1N27-F559B	1	AC	20	SE	EO -Q	T2001 (GEN)					Note 9
	C-6	ACTIVE	CH	O	EC -RO	T2005 (GEN)				RO-13	
					LD -2Y	P9414 (PTI)		200.0			

SYSTEM: FEEDWATER LEAKAGE CONTROL (N27) DWG. NO. D-302-971

VALVE/ DEVICE NO.	CLASS AND DWG. COOR.	VALVE CATEGORY/ ACTIVE OR PASSIVE	SIZE (in.) AND TYPE	ACTUATOR TYPE/ NORMAL POSITION	TEST REQ. AND FREQ.	SURV INST. NO. SVI-N27	STROKE TIME REFERENCE VALUE(sec)	LEAKAGE LIMIT(sccm gpm or bubbles)	DEVICE SET PRESS. REFERENCE VALUE(psi)	JUSTIFI-CATIONS & RELIEF REQUEST NO.	REMARKS
1N27-F737	2	A	1 1/2	MO	EO -CS	T2001				CS-3	
	C-12	ACTIVE	GL	C	STO-CS	T2001	15.7*			CS-3/VR-3	
					STC-CS	T2201	14.8*			CS-3/VR-3	
					LK -2Y	T2201		0.75			
					PI -2Y	T2001				VR-3	VR-Pending 16754
1N27-F739A	2	AC	1	SE	EO -RO	T2201				RO-21	
	D-8	ACTIVE	CH	C	EC -RO	T2201				RO-21	
					LK -2Y	T2201		1.0			
1N27-F739B	2	AC	1	SE	EO -RO	T2201				RO-21	
	C-8	ACTIVE	CH	C	EC -RO	T2201				RO-21	
					LK -2Y	T2201		1.0			
1N27-F740	2	A	1 1/2	MO	EO -CS	T2001				CS-3	
	G-12	ACTIVE	GL	C	STO-CS	T2001	16.0*			CS-3/VR-3	
					STC-CS	T2001	14.3*			CS-3/VR-3	
					LK -2Y	T2202		0.75			
					PI -2Y	T2001				VR-3	VR-Pending 8649
1N27-F742A	2	AC	1	SE	EO -RO	T2202				RO-21	
	H-8	ACTIVE	CH	C	EC -RO	T2202				RO-21	
					LK -2Y	T2202		1.0			
1N27-F742B	2	AC	1	SE	EO -RO	T2202				RO-21	
	G-8	ACTIVE	CH	C	EC -RO	T2202				RO-21	
					LK -2Y	T2202		1.0			
1N27-F751	2	A	1	MA	LJ -PB	T9107 (E12)		1,000.0			
	F-6	PASSIVE	GL	LC							

SYSTEM: CONDENSATE TRANSFER AND STORAGE (P11) DWG. NO. D-302-102

VALVE/ DEVICE NO.	CLASS AND DWG. COOR.	VALVE CATEGORY/ ACTIVE OR PASSIVE	SIZE (in.) AND TYPE	ACTUATOR TYPE/ NORMAL POSITION	TEST REQ. AND FREQ.	SURV INST. NO. SVI-P11	STROKE TIME REFERENCE VALUE(sec)	LEAKAGE LIMIT(sccm gpm or bubbles)	DEVICE SET PRESS. REFERENCE VALUE(psi)	JUSTIFI-CATIONS & RELIEF REQUEST NO.	REMARKS
1P11-F060	2	A	12	MO	EO -Q	T2002					
	C-10	ACTIVE	BF	O	EC -Q	T2002					
					STO-Q	T2002	28.1*			VR-3	
					STC-Q	T2002	28.7*			VR-3	
					LJ -PB	T9108		2,773.0			
					PI -2Y	T2002				VR-3	VR-Pending 16787
1P11-F080	2	A	10	MO	EO -Q	T2002					
	B-4	ACTIVE	BF	C	EC -Q	T2002					
					STO-Q	T2002	27.9*			VR-3	
					STC-Q	T2002	27.9*			VR-3	
					LJ -PB	T9111		2,311.0			
					PI -2Y	T2002				VR-3	VR-Pending 126781
1P11-F090	2	A	10	MO	EO -Q	T2002					
	B-6	ACTIVE	BF	C	EC -Q	T2002					
					STO-Q	T2002	29.0*			VR-3	
					STC-Q	T2002	29.0*			VR-3	
					LJ -PB	T9111		2,311.0			
					PI -2Y	T2002				VR-3	VR-Pending 126782
1P11-F545	2	AC	12	SE	EO -CVCM	T2005 (GEN)				RO-26	
	C-11	ACTIVE	CH	C	EC -CVCM	T9108				RO-26	
					LJ -PB	T9108		2,773.0			

SYSTEM: MIXED BED DEMIN & DISTRIBUTION (P22) DWG. NO. D-302-713

VALVE/ DEVICE NO.	CLASS AND DWG. COOR.	VALVE CATEGORY/ ACTIVE OR PASSIVE	SIZE (in.) AND TYPE	ACTUATOR TYPE/ NORMAL POSITION	TEST REQ. AND FREQ.	SURV INST. NO. SVI-P22	STROKE TIME REFERENCE VALUE(sec)	LEAKAGE LIMIT(sccm gpm or bubbles)	DEVICE SET PRESS. REFERENCE VALUE(psi)	JUSTIFI-CATIONS & RELIEF REQUEST NO.	REMARKS
1P22-F010	2	A	3	MO	EC -Q	T2002					
	F-11	ACTIVE	GT	O	STC-Q	T2002	17.0*			VR-3	
					LJ -PB	T9309		1,000.0			
					PI -2Y	T2002				VR-3	VR-Pending 13880
1P22-F015	O2	B	1 1/4	MO	EC -Q	T2002					
	H-11	ACTIVE	GL	C	STC-Q	T2002	16.0*				
					PI -2Y	T2002					
1P22-F577	2	AC	3	SE	EO -CVCM	T2005(GEN)				RO-26	
	G-11	ACTIVE	CH	C	EC -CVCM	T9309				RO-26	
					LJ -PB	T9309		1,000.0			

SYSTEM: SERVICE WATER SYSTEM (P41) DWG. NO. D-302-212

VALVE/ DEVICE NO.	CLASS AND DWG. COOR.	VALVE CATEGORY/ ACTIVE OR PASSIVE	SIZE (in.) AND TYPE	ACTUATOR TYPE/ NORMAL POSITION	TEST REQ. AND FREQ.	SURV INST. NO. SVI-P41	STROKE TIME REFERENCE VALUE(sec)	LEAKAGE LIMIT(sccm gpm or bubbles)	DEVICE SET PRESS. REFERENCE VALUE(psi)	JUSTIFI-CATIONS & RELIEF REQUEST NO.	REMARKS
P41-F420	3	B	36	MO	EC -Q	T2001					
	J-12	ACTIVE	BF	O	STC-Q	T2001	16.0*			VR-3	
					PI -2Y	T2001				VR-3	VR-Pending 13014
P41-F430	3	B	36	MO	EC -Q	T2001					
	J-11	ACTIVE	BF	O	STC-Q	T2001	16.0*			VR-3	
					PI -2Y	T2001				VR-3	VR-Pending 13012

SYSTEM: EMERGENCY CLOSED COOLING SYSTEM (P42) DWG. NO. D-302-621

VALVE/ DEVICE NO.	CLASS AND DWG. COOR.	VALVE CATEGORY/ ACTIVE OR PASSIVE	SIZE (in.) AND TYPE	ACTUATOR TYPE/ NORMAL POSITION	TEST REQ. AND FREQ.	SURV INST. NO. SVI-P42	STROKE TIME REFERENCE VALUE(sec)	LEAKAGE LIMIT(sccm gpm or bubbles)	DEVICE SET PRESS. REFERENCE VALUE(psi)	JUSTIFI-CATIONS & RELIEF REQUEST NO.	REMARKS
1P42-F519A	3	C	12	SE	EO -Q	T2001A					
	E-11	ACTIVE	CH	C	EC -2Y	T2001A					Acoustic Monitoring
1P42-F519B	3	C	12	SE	EO -Q	T2001B					
	G-11	ACTIVE	CH	C	EC -2Y	T2001B					Acoustic Monitoring
P42-F543A	3	C	3/4	SE	RT -10Y	T2100 (GEN)			150.0		
	C-5	ACTIVE	RE	C							
P42-F543B	3	C	3/4	SE	RT -10Y	T2100 (GEN)			150.0		
	H-5	ACTIVE	RE	C							
P42-F543C	3	C	3/4	SE	RT -10Y	T2100 (GEN)			150.0		
	F-5	ACTIVE	RE	C							

SYSTEM: EMERGENCY CLOSED COOLING SYSTEM (P42) DWG. NO. D-352-621

VALVE/ DEVICE NO.	CLASS AND DWG. COOR.	VALVE CATEGORY/ ACTIVE OR PASSIVE	SIZE (in.) AND TYPE	ACTUATOR TYPE/ NORMAL POSITION	TEST REQ. AND FREQ.	SURV INST. NO. SVI-P42	STROKE TIME REFERENCE VALUE(sec)	LEAKAGE LIMIT(sccm gpm or bubbles)	DEVICE SET PRESS. REFERENCE VALUE(psi)	JUSTIFI-CATIONS & RELIEF REQUEST NO.	REMARKS
P42-F255A	3	B	10	MO	EC -Q	T2002					
	C-7	ACTIVE	BF	O	STC-Q	T2002	28.0				
					PI -2Y	T2002					
P42-F255B	3	B	10	MO	EC -Q	T2002					
	G-6	ACTIVE	BF	O	STC-Q	T2002	29.3				
					PI -2Y	T2002					
P42-F260A	3	B	10	MO	EO -RO	T2003A				RO-15	
	D-8	ACTIVE	BF	C	STO-RO	T2003A	30.0			RO-15	
					PI -2Y	T2003A					
P42-F260B	3	B	10	MO	EO -RO	T2003B				RO-15	
	F-7	ACTIVE	BF	C	STO-RO	T2003B	25.0			RO-15	
					PI -2Y	T2003B					
P42-F265A	3	B	10	MO	EO -RO	T2003A				RO-15	
	D-4	ACTIVE	BF	C	STO-RO	T2003A	29.0			RO-15	
					PI -2Y	T2003A					
P42-F265B	3	B	10	MO	EO -RO	T2003B				RO-15	
	F-4	ACTIVE	BF	C	STO-RO	T2003B	26.0			RO-15	
					PI -2Y	T2003B					
P42-F380A	3	B	10	MO	EC -Q	T2002					
	D-7	ACTIVE	BF	O	STC-Q	T2002	31.0				
					PI -2Y	T2002					

SYSTEM: EMERGENCY CLOSED COOLING SYSTEM (P42) DWG. NO. D-352-621

VALVE/ DEVICE NO.	CLASS AND DWG. COOR.	VALVE CATEGORY/ ACTIVE OR PASSIVE	SIZE (in.) AND TYPE	ACTUATOR TYPE/ NORMAL POSITION	TEST REQ. AND FREQ.	SURV INST. NO. SVI-P42	STROKE TIME REFERENCE VALUE(sec)	LEAKAGE LIMIT(sccm gpm or bubbles)	DEVICE SET PRESS. REFERENCE VALUE(psi)	JUSTIFI-CATIONS & RELIEF REQUEST NO.	REMARKS
P42-F380B	3	B	10	MO	EC -Q	T2002					
	E-7	ACTIVE	BF	O	STC-Q	T2002	29.0				
					PI -2Y	T2002					
P42-F390A	3	B	10	MO	EC -Q	T2002					
	D-4	ACTIVE	BF	O	STC-Q	T2002	28.0				
					PI -2Y	T2002					
P42-F390B	3	B	10	MO	EC -Q	T2002					
	E-3	ACTIVE	BF	O	STC-Q	T2002	28.0				
					PI -2Y	T2002					
P42-F440	3	B	10	MO	EC -Q	T2002					
	E-7	ACTIVE	BF	O	STC-Q	T2002	28.0				
					PI -2Y	T2002					
P42-F445	3	B	10	MO	EC -Q	T2002					
	E-3	ACTIVE	BF	O	STC-Q	T2002	30.0				
					PI -2Y	T2002					
P42-F590A	3	C	3/4	SE	RT -10Y	T2100 (GEN)			150.0		
	D-5	ACTIVE	RE	C							
P42-F590B	3	C	3/4	SE	RT -10Y	T2100 (GEN)			150.0		
	E-5	ACTIVE	RE	C							

SYSTEM: EMERGENCY CLOSED COOLING SYSTEM (P42) DWG. NO. D-302-622

VALVE/ DEVICE NO.	CLASS AND DWG. COOR.	VALVE CATEGORY/ ACTIVE OR PASSIVE	SIZE (in.) AND TYPE	ACTUATOR TYPE/ NORMAL POSITION	TEST REQ. AND FREQ.	SURV INST. NO. SVI-P42	STROKE TIME REFERENCE VALUE(sec)	LEAKAGE LIMIT(sccm gpm or bubbles)	DEVICE SET PRESS. REFERENCE VALUE(psi)	JUSTIFI-CATIONS & RELIEF REQUEST NO.	REMARKS
1P42-F540	3 C-3	C ACTIVE	3/4 RE	SE C	RT -10Y	T2100 (GEN)			94.0		56.0 psi BACK-PRESSURE
1P42-F566A	3 D-7	C ACTIVE	3/4 RE	SE C	RT -10Y	T2100 (GEN)			94.0		56.0 psi BACK-PRESSURE
1P42-F566B	3 H-11	C ACTIVE	3/4 RE	SE C	RT -10Y	T2100 (GEN)			94.0		56.0 psi BACK-PRESSURE
1P42-F566C	3 H-6	C ACTIVE	3/4 RE	SE C	RT -10Y	T2100 (GEN)			94.0		56.0 psi BACK-PRESSURE
1P42-F570	3 C-11	C ACTIVE	3/4 RE	SE C	RT -10Y	T2100 (GEN)			94.0		56.0 psi BACK-PRESSURE
1P42-F671A	3 B-6	C ACTIVE	¾ RE	SE C	RT-10Y	T2100 (GEN)			150.0		
1P42-F671B	3 F-11	C ACTIVE	¾ RE	SE C	RT-10Y	T2100 (GEN)			150.0		
1P42-F671C	3 F-6	C ACTIVE	¾ RE	SE C	RT-10Y	T2100 (GEN)			150.0		

VALVE/ DEVICE NO.	CLASS AND DWG. COOR.	VALVE CATEGORY/ ACTIVE OR PASSIVE	SIZE (in.) AND TYPE	ACTUATOR TYPE/ NORMAL POSITION	TEST REQ. AND FREQ.	SURV INST. NO. SVI-P43	STROKE TIME REFERENCE VALUE(sec)	LEAKAGE LIMIT(sccm gpm or bubbles)	DEVICE SET PRESS. REFERENCE VALUE(psi)	JUSTIFI-CATIONS & RELIEF REQUEST NO.	REMARKS
1P43-F055	2	A	12	MO	EC -RO	T2001				RO-3	
	J-13	ACTIVE	BF	O	STC-RO	T2001	28.6*			RO-3/VR-3	
					LJ -PB	T9310		2,773.0			
					PI -2Y	T2001				VR-3	VR-Pending 23028
1P43-F140	2	A	12	MO	EC -RO	T2001				RO-3	
	J-4	ACTIVE	BF	O	STC-RO	T2001	27.9*			RO-3/VR-3	
					LJ -PB	T9311		2,773.0			
					PI -2Y	T2001				VR-3	VR-Pending 23024
1P43-F215	2	A	12	MO	EC -RO	T2001				RO-3	
	J-4	ACTIVE	BF	O	STC-RO	T2001	28.1*			RO-3/VR-3	
					LJ -PB	T9311		2,773.0			
					PI -2Y	T2001				VR-3	VR-Pending 22930
1P43-F355	O2	B	10	MO	EC -RO	T2001				RO-3	
	J-11	ACTIVE	BF	O	STC-RO	T2001	9.9*			RO-3/VR-3	
					PI -2Y	T2001				VR-3	VR-Pending 9652
1P43-F400	O2	B	10	MO	EC -RO	T2001				RO-3	
	J-7	ACTIVE	BF	O	STC-RO	T2001	10.0*			RO-3/VR-3	
					PI -2Y	T2001				VR-3	VR-Pending 32599
1P43-F410	O2	B	10	MO	EC -RO	T2001				RO-3	
	J-6	ACTIVE	BF	O	STC-RO	T2001	10.0*			RO-3/VR-3	
					PI -2Y	T2001				VR-3	VR-Pending 30518
1P43-F721	2	AC	12	SE	EO -Q	T2001 (GEN)					
	J-12	ACTIVE	CH	O	EC -CVCM	T9310/T2003				RO-13	
					LJ-PB	T9310		2,773.0			
1P43-F851	2	AC	1/4	SE	RT-10Y	T2100 (GEN)			150 ±30		
	J-4	ACTIVE	RE	C	LJ -PB	T9311		2,773.0			
1P43-F852	O2	C	1/4	SE	RT-10Y	T2100 (GEN)			150 ±30		
	J/6		RE	C							

SYSTEM: EMERGENCY SERVICE WATER (P45) DWG. NO. D-302-791

VALVE/ DEVICE NO.	CLASS AND DWG. COOR.	VALVE CATEGORY/ ACTIVE OR PASSIVE	SIZE (in.) AND TYPE	ACTUATOR TYPE/ NORMAL POSITION	TEST REQ. AND FREQ.	SURV INST. NO. SVI-P45	STROKE TIME REFERENCE VALUE(sec)	LEAKAGE LIMIT(sccm gpm or bubbles)	DEVICE SET PRESS. REFERENCE VALUE(psi)	JUSTIFI-CATIONS & RELIEF REQUEST NO.	REMARKS
1P45-F130A	3	B	24	MO	EO -Q	T2001					SVI-C61-T1201
	C-13	ACTIVE	BF	C	EC -Q	T2001					REMOTE S/D
					STO-Q	T2001	29.4*			VR-3	PANEL
					STC-Q	T2001	29.6*			VR-3	
					PI -2Y	T2001				VR-3	VR-Pending 23041
1P45-F130B	3	B	24	MO	EO -Q	T2002					SVI-C61-T1202
	C-11	ACTIVE	BF	C	EC -Q	T2002					REMOTE S/D
					STO-Q	T2002	29.0*			VR-3	LOCAL BREAKER
					STC-Q	T2002	29.0*			VR-3	
					PI -2Y	T2002				VR-3	VR-Pending 13766
1P45-F140	3	B	8	MO	EO -Q	T2003					
	D-8	ACTIVE	BF	C	EC -Q	T2003					
					STO-Q	T2003	29.8*			VR-3	
					STC-Q	T2003	29.9*			VR-3	
					PI -2Y	T2003				VR-3	VR-Pending 22942
1P45-F501A	3	C	24	SE	EO -Q	T2001					REFERENCE
	G-13	ACTIVE	CH	C	EC -Q	T2001					IEB: 83-03
1P45-F501B	3	C	24	SE	EO -Q	T2002					REFERENCE
	G-11	ACTIVE	CH	C	EC -Q	T2002					IEB: 83-03
1P45-F502A	3	C	2	SE	EO -Q	T2006					
	G-13	ACTIVE	CH	C	EC -Q	T2001					
1P45-F502B	3	C	2	SE	EO -Q	T2006					
	G-10	ACTIVE	CH	C	EC -Q	T2002					

SYSTEM: EMERGENCY SERVICE WATER (P45) DWG. NO. D-302-791

VALVE/ DEVICE NO.	CLASS AND DWG. COOR.	VALVE CATEGORY/ ACTIVE OR PASSIVE	SIZE (in.) AND TYPE	ACTUATOR TYPE/ NORMAL POSITION	TEST REQ. AND FREQ.	SURV INST. NO. SVI-P45	STROKE TIME REFERENCE VALUE(sec)	LEAKAGE LIMIT(sccm gpm or bubbles)	DEVICE SET PRESS. REFERENCE VALUE(psi)	JUSTIFI-CATIONS & RELIEF REQUEST NO.	REMARKS
1P45-F506	3	C	2	SE	EO -Q	T2006					
	G-8	ACTIVE	CH	C	EC -Q	T2003					
1P45-F517	3	C	3/4	SE	RT -10Y	T2100 (GEN)			150.0		
	A-6	ACTIVE	RE	C							
1P45-F520	3	C	3/4	SE	RT -10Y	T2100 (GEN)			150.0		
	F-5	ACTIVE	RE	C							
1P45-F525	3	B	8	MA	EO -Q	See Remarks					Note 11:
	C-2	ACTIVE	BF	O	EC -Q	See Remarks					Note 11:
1P45-F526	3	B	24	MA	EO -Q	See Remarks					Note 11:
	B-2	ACTIVE	BF	O	EC -Q	See Remarks					Note 11:
1P45-F527	3	B	24	MA	EO -Q	See Remarks					Note 11:
	D-2	ACTIVE	BF	O	EC -Q	See Remarks					Note 11:
1P45-F552	3	C	8	SE	EO -Q	T2003					REFERENCE
	G-8	ACTIVE	CH	C	EC -Q	T2003					IEB: 83-03
P45-F006A	3	AC	1/2	SE	EO -Q	T2007					Note 8:
	H-5	ACTIVE	CH	C	EC -Q	T2007					
					LD -1Y	T2007		2.0 SCFH			
P45-F006B	3	AC	1/2	SE	EO -Q	T2007					Note 8:
	G-5	ACTIVE	CH	C	EC -Q	T2007					
					LD -1Y	T2007		2.0 SCFH			

SYSTEM: EMERGENCY SERVICE WATER (P45) DWG. NO. D-302-791

VALVE/ DEVICE NO.	CLASS AND DWG. COOR.	VALVE CATEGORY/ ACTIVE OR PASSIVE	SIZE (in.) AND TYPE	ACTUATOR TYPE/ NORMAL POSITION	TEST REQ. AND FREQ.	SURV INST. NO. SVI-P45	STROKE TIME REFERENCE VALUE(sec)	LEAKAGE LIMIT(sccm gpm or bubbles)	DEVICE SET PRESS. REFERENCE VALUE(psi)	JUSTIFI-CATIONS & RELIEF REQUEST NO.	REMARKS
P45-F007A	3	AC	1/2	SE	EO -Q	T2007					Note 8:
	H-5	ACTIVE	CH	C	EC -Q	T2007					
					LD -1Y	T2007		2.0 SCFH			
P45-F007B	3	AC	1/2	SE	EO -Q	T2007					Note 8:
	G-5	ACTIVE	CH	C	EC -Q	T2007					
					LD -1Y	T2007		2.0 SCFH			
P45-F009A	3	AC	1/2	SE	EO -Q	T2007					Note 8:
	H-5	ACTIVE	CH	C	EC -Q	T2007					
					LD -1Y	T2007		2.0 SCFH			
P45-F009B	3	AC	1/2	SE	EO -Q	T2007					Note 8:
	G-5	ACTIVE	CH	C	EC -Q	T2007					
					LD -1Y	T2007		2.0 SCFH			

SYSTEM: EMERGENCY SERVICE WATER (P45) DWG. NO. D-302-792

VALVE/ DEVICE NO.	CLASS AND DWG. COOR.	VALVE CATEGORY/ ACTIVE OR PASSIVE	SIZE (in.) AND TYPE	ACTUATOR TYPE/ NORMAL POSITION	TEST REQ. AND FREQ.	SURV INST. NO. SVI-P45	STROKE TIME REFERENCE VALUE(sec)	LEAKAGE LIMIT(sccm gpm or bubbles)	DEVICE SET PRESS. REFERENCE VALUE(psi)	JUSTIFI-CATIONS & RELIEF REQUEST NO.	REMARKS
1P45-F531A	3 B-13	C ACTIVE	3/4 RE	SE C	RT -10Y	T2100 (GEN)			150.0		
1P45-F531B	3 J-13	C ACTIVE	3/4 RE	SE C	RT -10Y	T2100 (GEN)			150.0		
1P45-F537A	3 C-10	C ACTIVE	3/4 RE	SE C	RT -10Y	T2100 (GEN)			150.0		
1P45-F537B	3 G-10	C ACTIVE	3/4 RE	SE C	RT -10Y	T2100 (GEN)			150.0		
1P45-F543A	3 E-8	C ACTIVE	3/4 RE	SE C	RT -10Y	T2100 (GEN)			150.0		
1P45-F543B	3 F-8	C ACTIVE	3/4 RE	SE C	RT -10Y	T2100 (GEN)			150.0		
1P45-F571A	3 B-5	C ACTIVE	1 1/2 RE	SE C	RT -10Y	T2100 (GEN)			125.0		
1P45-F571B	3 K-6	C ACTIVE	1 1/2 RE	SE C	RT -10Y	T2100 (GEN)			125.0		
1P45-F575	2 F-9	C ACTIVE	18 CH	SE C	EO -CVCM EC -CVCM	T2000 (GEN) T2000 (GEN)				RO-2 RO-2	optionally tested

SYSTEM: CONTROL COMPLEX CHILLED WATER (P47) DWG. NO. D-913-001

VALVE/ DEVICE NO.	CLASS AND DWG. COOR.	VALVE CATEGORY/ ACTIVE OR PASSIVE	SIZE (in.) AND TYPE	ACTUATOR TYPE/ NORMAL POSITION	TEST REQ. AND FREQ.	SURV INST. NO. SVI-P47	STROKE TIME REFERENCE VALUE(sec)	LEAKAGE LIMIT(sccm gpm or bubbles)	DEVICE SET PRESS. REFERENCE VALUE(psi)	JUSTIFI-CATIONS & RELIEF REQUEST NO.	REMARKS
P47-F506A	3	C	10	SE	EO -Q	T2001A					
	C-5	ACTIVE	CH	C	EC -Q	T2001C					
P47-F506B	3	C	10	SE	EO -Q	T2001B					
	H-5	ACTIVE	CH	C	EC -Q	T2001C					
P47-F506C	3	C	10	SE	EO -Q	T2001C					
	E-5	ACTIVE	CH	C	EC -Q	T2001C					
P47-F574A	3	C	3/4	SE	RT -10Y	T2100 (GEN)			150.0		
	C-5	ACTIVE	RE	C							
P47-F574B	3	C	3/4	SE	RT -10Y	T2100 (GEN)			150.0		
	H-5	ACTIVE	RE	C							
P47-F574C	3	C	3/4	SE	RT -10Y	T2100 (GEN)			150.0		
	E-5	ACTIVE	RE	C							

SYSTEM: CONTROL COMPLEX CHILLED WATER (P47) DWG. NO. D-913-002

VALVE/ DEVICE NO.	CLASS AND DWG. COOR.	VALVE CATEGORY/ ACTIVE OR PASSIVE	SIZE (in.) AND TYPE	ACTUATOR TYPE/ NORMAL POSITION	TEST REQ. AND FREQ.	SURV INST. NO. SVI-P47	STROKE TIME REFERENCE VALUE(sec)	LEAKAGE LIMIT(sccm gpm or bubbles)	DEVICE SET PRESS. REFERENCE VALUE(psi)	JUSTIFI-CATIONS & RELIEF REQUEST NO.	REMARKS
P47-F290A	3	B	6	MO	EC -Q	T2001A					
	D-3	ACTIVE	BF	O	STC-Q	T2001A	28.0*				
					PI -2Y	T2001A					
P47-F290B	3	B	6	MO	EC -Q	T2001B					
	E-3	ACTIVE	BF	O	STC-Q	T2001B	30.0*				
					PI -2Y	T2001B					
P47-F295A	3	B	6	MO	EC -Q	T2001A					
	E-4	ACTIVE	BF	O	STC-Q	T2001A	32.0*				
					PI -2Y	T2001A					
P47-F295B	3	B	6	MO	EC -Q	T2001B					
	F-3	ACTIVE	BF	O	STC-Q	T2001B	29.0*				
					PI -2Y	T2001B					

SYSTEM: EMERGENCY SERVICE SCREEN WASH (P49) DWG. NO. D-302-214

VALVE/ DEVICE NO.	CLASS AND DWG. COOR.	VALVE CATEGORY/ ACTIVE OR PASSIVE	SIZE (in.) AND TYPE	ACTUATOR TYPE/ NORMAL POSITION	TEST REQ. AND FREQ.	SURV INST. NO. SVI-P47	STROKE TIME REFERENCE VALUE(sec)	LEAKAGE LIMIT(sccm gpm or bubbles)	DEVICE SET PRESS. REFERENCE VALUE(psi)	JUSTIFI-CATIONS & RELIEF REQUEST NO.	REMARKS
P49-F502A	03 C-11	C ACTIVE	6 CH	SE C	EO -N/A EC -N/A	NONE NONE					REFERENCE IEB: 83-03, OPEN VERIFICATION PTI-P49-P0001
P49-F502B	03 G-11	C ACTIVE	6 CH	SE C	EO -N/A EC -N/A	NONE NONE					REFERENCE IEB: 83-03, OPEN VERIFICATION PTI-P49-P0001

SYSTEM: CONTAINMENT VESSEL CHILLED (P50) DWG. NO. D-913-008

VALVE/ DEVICE NO.	CLASS AND DWG. COOR.	VALVE CATEGORY/ ACTIVE OR PASSIVE	SIZE (in.) AND TYPE	ACTUATOR TYPE/ NORMAL POSITION	TEST REQ. AND FREQ.	SURV INST. NO. SVI-P50	STROKE TIME REFERENCE VALUE(sec)	LEAKAGE LIMIT(sccm gpm or bubbles)	DEVICE SET PRESS. REFERENCE VALUE(psi)	JUSTIFI-CATIONS & RELIEF REQUEST NO.	REMARKS
1P50-F060	2	A	6	MO	EC -Q	T2001					
	F-4	ACTIVE	BF	O	STC-Q	T2001	28.0*			VR-3	
					LJ -PB	T9404		1,386.0			
					PI -2Y	T2001				VR-3	VR-Pending 32630
1P50-F140	2	A	6	MO	EC -Q	T2001					
	E-5	ACTIVE	BF	O	STC-Q	T2001	31.0*			VR-3	
					LJ -PB	T9405		1,386.0			
					PI -2Y	T2001				VR-3	VR-Pending 14482
1P50-F150	2	A	6	MO	EC -Q	T2001					
	E-4	ACTIVE	BF	O	STC-Q	T2001	29.9*			VR-3	
					LJ -PB	T9405		1,386.0			
					PI -2Y	T2001				VR-3	VR-Pending 14424
1P50-F539	2	AC	6	SE	EO -Q	T2001 (GEN)					
	F-5	ACTIVE	CH	O	EC -CVCM	T9404				RO-13	
					LJ -PB	T9404		1,386.0			
1P50-F606	O2	AC	1/4	SE	RT-10Y	T2100 (GEN)			200 ±40		
	E-5	ACTIVE	RE	C	LJ -PB	T9405		1,386.0			

SYSTEM: SERVICE AIR DISTRIBUTION (P51) DWG. NO. D-302-242

VALVE/ DEVICE NO.	CLASS AND DWG. COOR.	VALVE CATEGORY/ ACTIVE OR PASSIVE	SIZE (in.) AND TYPE	ACTUATOR TYPE/ NORMAL POSITION	TEST REQ. AND FREQ.	SURV INST. NO. SVI-P51	STROKE TIME REFERENCE VALUE(sec)	LEAKAGE LIMIT(sccm gpm or bubbles)	DEVICE SET PRESS. REFERENCE VALUE(psi)	JUSTIFI-CATIONS & RELIEF REQUEST NO.	REMARKS
1P51-F150	2	A	2 1/2	AO	EC -Q	T2001					
	G-9	ACTIVE	GL	O	STC-Q	T2001	9.7*				
					FS -Q	T2001					
					LJ -PB	T9308		1,000.0			
					PI 2Y	T2001					
1P51-F530	2	AC	2 1/2	SE	EO -CVCM	T2005 (GEN)				RO-26	
	H-9	ACTIVE	CH	C	EC -CVCM	T9308/T2003				RO-26	
					LJ -PB	T9308		1,000.0			
1P51-F652	O2	B	1 1/2	MO	EC -Q	T2001					
	K-11	ACTIVE	GL	C	STC-Q	T2001	9.0*				
					PI -2Y	T2001					

SYSTEM: INSTRUMENT AIR (P52) DWG. NO. D-302-243

VALVE/ DEVICE NO.	CLASS AND DWG. COOR.	VALVE CATEGORY/ ACTIVE OR PASSIVE	SIZE (in.) AND TYPE	ACTUATOR TYPE/ NORMAL POSITION	TEST REQ. AND FREQ.	SURV INST. NO. SVI-P52	STROKE TIME REFERENCE VALUE(sec)	LEAKAGE LIMIT(sccm gpm or bubbles)	DEVICE SET PRESS. REFERENCE VALUE(psi)	JUSTIFI-CATIONS & RELIEF REQUEST NO.	REMARKS
1P52-F170	2	A	3/4	SO	EC -Q	T2002					
	G-11	ACTIVE	GL	O	STC-Q	T2002	2.0*				
					FS -Q	T2002					
					LJ -PB	T9312 (P53)		1,000.0			
					PI 2Y	T9312 (P53)/ T2004 (P53)					

SYSTEM: INSTRUMENT AIR (P52) DWG. NO. D-302-244

VALVE/ DEVICE NO.	CLASS AND DWG. COOR.	VALVE CATEGORY/ ACTIVE OR PASSIVE	SIZE (in.) AND TYPE	ACTUATOR TYPE/ NORMAL POSITION	TEST REQ. AND FREQ.	SURV INST. NO. SVI-P52	STROKE TIME REFERENCE VALUE(sec)	LEAKAGE LIMIT(sccm gpm or bubbles)	DEVICE SET PRESS. REFERENCE VALUE(psi)	JUSTIFI-CATIONS & RELIEF REQUEST NO.	REMARKS
1P52-F160	2	A	3/4	SO	EC -Q	T2002					
	G-11	ACTIVE	GL	O	STC-Q	T2002	2.0*				
					FS -Q	T2002					
					LJ -PB	T9305 (P53)		1,000.0			
					PI 2Y	T9305 (P53)/ T2003 (P53)					
1P52-F200	2	A	2	MO	EC -Q	T2001					
	D-8	ACTIVE	GL	O	STC-Q	T2001	14.0*			VR-3	
					LJ -PB	T9306		1,000.0			
					PI -2Y	T2001				VR-3	VR-Pending 37676
1P52-F550	2	AC	1 1/2	SE	EO -RO	T2009 (B21)				RO-22	
	E-8	ACTIVE	CH	C	EC -CVCM	T9306				RO-22	
					LJ -PB	T9306		1,000.0			
1P52-F646	O2	B	2	MO	EC -Q	T2001					
	G-7	ACTIVE	GL	O	STC-Q	T2001	13.0*			VR-3	
					PI -2Y	T2001				VR-3	VR-Pending 43270

SYSTEM: PENETRATION PRESSURIZATION (P53) DWG. NO. D-302-761

VALVE/ DEVICE NO.	CLASS AND DWG. COOR.	VALVE CATEGORY/ ACTIVE OR PASSIVE	SIZE (in.) AND TYPE	ACTUATOR TYPE/ NORMAL POSITION	TEST REQ. AND FREQ.	SURV INST. NO. SVI-P53	STROKE TIME REFERENCE VALUE(sec)	LEAKAGE LIMIT(sccm gpm or bubbles)	DEVICE SET PRESS. REFERENCE VALUE(psi)	JUSTIFI-CATIONS & RELIEF REQUEST NO.	REMARKS
1P53-F010	2	A	¾	SO	E0 -Q	T2001					
	B-9	ACTIVE	GL	C	EC -Q	T2001					
					STO-Q	T2001	2.0*				
					STC-Q	T2001	2.0*				
					FS -Q	T2001					
					LJ -PB	T9305		1,000.0			
					PI -2Y	T9305/T2003					
1P53-F015	2	A	¾	SO	E0 -Q	T2001					
	C-9	ACTIVE	GL	C	EC -Q	T2001					
					STO-Q	T2001	2.0*				
					STC-Q	T2001	2.0*				
					FS -Q	T2001					
					LJ -PB	T9305		1,000.0			
					PI -2Y	T9305/T2003					
1P53-F020	2	A	¾	SO	E0 -Q	T2001					
	F-9	ACTIVE	GL	C	EC -Q	T2001					
					STO-Q	T2001	2.0*				
					STC-Q	T2001	2.0*				
					FS -Q	T2001					
					LJ -PB	T9312		1,000.0			
					PI -2Y	T9312/T2004					
1P53-F025	2	A	¾	SO	E0 -Q	T2001					
	G-9	ACTIVE	GL	C	EC -Q	T2001					
					STO-Q	T2001	2.0*				
					STC-Q	T2001	2.0*				
					FS -Q	T2001					
					LJ -PB	T9312		1,000.0			
					PI -2Y	T9312/T2004					

SYSTEM: PENETRATION PRESSURIZATION (P53) DWG. NO. D-302-761

VALVE/ DEVICE NO.	CLASS AND DWG. COOR.	VALVE CATEGORY/ ACTIVE OR PASSIVE	SIZE (in.) AND TYPE	ACTUATOR TYPE/ NORMAL POSITION	TEST REQ. AND FREQ.	SURV INST. NO. SVI-P53	STROKE TIME REFERENCE VALUE(sec)	LEAKAGE LIMIT(sccm gpm or bubbles)	DEVICE SET PRESS. REFERENCE VALUE(psi)	JUSTIFI-CATIONS & RELIEF REQUEST NO.	REMARKS
1P53-F030	2	A	¾	SO	E0 -Q	T2001					SOLENOID OPEN
	C-11	ACTIVE	GL	O	EC -Q	T2001					AND CLOSED
					STO-Q	T2001	2.0*				
					STC-Q	T2001	2.0*				
					LJ -PB	T9305		1,000.0			
					PI -2Y	T9305/T2003					
1P53-F035	2	A	¾	SO	E0 -Q	T2001					SOLENOID OPEN
	D-12	ACTIVE	GL	C	EC -Q	T2001					AND CLOSED
					STO-Q	T2001	2.0*				
					STC-Q	T2001	2.0*				
					LJ -PB	T9305		1,000.0			
					PI -2Y	T9305/T2003					
1P53-F040	2	A	¾	SO	E0 -Q	T2001					SOLENOID OPEN
	H-11	ACTIVE	GL	O	EC -Q	T2001					AND CLOSED
					STO-Q	T2001	2.0*				
					STC-Q	T2001	2.0*				
					LJ -PB	T9312		1,000.0			
					PI -2Y	T9312/T2004					
1P53-F045	2	A	¾	SO	E0 -Q	T2001					SOLENOID OPEN
	J-12	ACTIVE	GL	C	EC -Q	T2001					AND CLOSED
					STO-Q	T2001	2.0*				
					STC-Q	T2001	2.0*				
					LJ -PB	T9312		1,000.0			
					PI -2Y	T9312/T2004					

SYSTEM: PENETRATION PRESSURIZATION (P53) DWG. NO. D-302-761

VALVE/ DEVICE NO.	CLASS AND DWG. COOR.	VALVE CATEGORY/ ACTIVE OR PASSIVE	SIZE (in.) AND TYPE	ACTUATOR TYPE/ NORMAL POSITION	TEST REQ. AND FREQ.	SURV INST. NO. SVI-P53	STROKE TIME REFERENCE VALUE(sec)	LEAKAGE LIMIT(sccm gpm or bubbles)	DEVICE SET PRESS. REFERENCE VALUE(psi)	JUSTIFI-CATIONS & RELIEF REQUEST NO.	REMARKS
1P53-F070	2	A	¾	SO	EC -Q	T2001					SOLENOID OPEN
	B-8	ACTIVE	GL	O	STC-Q	T2001	2.0*				AND CLOSED
					LJ -PB	T9305		1,000.0			
					PI -2Y	T9305/T2003					
1P53-F075	2	A	¾	SO	EC -Q	T2001					SOLENOID OPEN
	F-8	ACTIVE	GL	O	STC-Q	T2001	2.0*				AND CLOSED
					LJ -PB	T9312		1,000.0			
					PI -2Y	T9312/T2004					
1P53-F536	2	A	1	MA	LJ -PB	T9305		1,000.0			
	D-9	PASSIVE	GL	LC							
1P53-F541	2	A	1	MA	LJ -PB	T9312		1,000.0			
	H-9	PASSIVE	GL	LC							
1P53-F556	2	A	3/4	MA	LJ -PB	T9305		1,000.0			
	C-13	PASSIVE	GL	LO							
1P53-F561	2	A	3/4	MA	LJ -PB	T9312		1,000.0			
	G-13	PASSIVE	GL	LO							
1P53-F570	2	A	1	MA	LJ -PB	T9305		1,000.0			
	D-9	PASSIVE	GL	LC							
1P53-F571	2	A	1	MA	LJ -PB	T9312		1,000.0			
	H-9	PASSIVE	GL	LC							

SYSTEM: PENETRATION PRESSURIZATION (P53) DWG. NO. D-302-762

VALVE/ DEVICE NO.	CLASS AND DWG. COOR.	VALVE CATEGORY/ ACTIVE OR PASSIVE	SIZE (in.) AND TYPE	ACTUATOR TYPE/ NORMAL POSITION	TEST REQ. AND FREQ.	SURV INST. NO. SVI-P53	STROKE TIME REFERENCE VALUE(sec)	LEAKAGE LIMIT(sccm gpm or bubbles)	DEVICE SET PRESS. REFERENCE VALUE(psi)	JUSTIFI-CATIONS & RELIEF REQUEST NO.	REMARKS
1P53-F572A	2	AC	½	SE	EO -Q	T2022					
	C-3	ACTIVE	CH	C	EC -RO	T7305				RO-30	
					LD -2Y	T7305		N/A			
1P53-F572B	2	AC	½	SE	EO -Q	T2022					
	C-6	ACTIVE	CH	C	EC -R0	T7305				RO-30	
					LD -2Y	T7305		N/A			
1P53-F573A	2	AC	½	SE	EO -Q	T2022					
	D-3	ACTIVE	CH	C	EC -RO	T7305				R0-30	
					LD -2Y	T7305		N/A			
1P53-F573B	2	AC	½	SE	EO -Q	T2022					
	D-6	ACTIVE	CH	C	EC -RO	T7305				RO-30	
					LD -2Y	T7305		N/A			
1P53-F574	2	AC	½	SE	EO -Q	T2022					
	C-5	ACTIVE	CH	C	EC -R0	T7305				RO-30	
					LD-2Y	T7305					
1P53-F579A	2	A	1	MA	EO -Q	T2022					
	D-2	ACTIVE	BA	C	EC -Q	T2022					
					LJ -PB	T7305		1,000.0			
1P53-F579B	2	A	1	MA	EO -Q	T2022					
	D-5	ACTIVE	BA	C	EC -Q	T2022					
					LJ -PB	T7305		1,000.0			
1P53-F580A	2	A	1	MA	EO -Q	T2022					
	D-3	ACTIVE	BA	C	EC -Q	T2022					
					LJ -PB	T7305		1,000.0			

SYSTEM: PENETRATION PRESSURIZATION (P53) DWG. NO. D-302-762

VALVE/ DEVICE NO.	CLASS AND DWG. COOR.	VALVE CATEGORY/ ACTIVE OR PASSIVE	SIZE (in.) AND TYPE	ACTUATOR TYPE/ NORMAL POSITION	TEST REQ. AND FREQ.	SURV INST. NO. SVI-P53	STROKE TIME REFERENCE VALUE(sec)	LEAKAGE LIMIT(sccm gpm or bubbles)	DEVICE SET PRESS. REFERENCE VALUE(psi)	JUSTIFI-CATIONS & RELIEF REQUEST NO.	REMARKS
1P53-F580B	2	A	1	MA	EO -Q	T2022					
	D-6	ACTIVE	BA	C	EC -Q	T2022					
					LJ -PB	T7305		1,000.0			
1P53-F581	2	AC	1	SE	SP -2YD	T8305			2.5		
	E-4	ACTIVE	SD	C	LJ -PB	T8305		1,000.0			
1P53-F582	2	AC	1	SE	SP -2YD	T8305			2.5		
	E-5	ACTIVE	SD	C	LJ -PB	T8305		1,000.0			
1P53-F587A	2	AC	½	SE	EO -Q	T2022					
	B-10	ACTIVE	CH	C	EC -RO	T7312				RO-30	
					LD -2Y	T7312		N/A			
1P53-F587B	2	AC	½	SE	EO -Q	T2022					
	B-13	ACTIVE	CH	C	EC -RO	T7312				RO-30	
					LD -2Y	T7312		N/A			
1P53-F588A	2	AC	½	SE	EO -Q	T2022					
	C-10	ACTIVE	CH	C	EC -RO	T7312				RO-30	
					LD -2Y	T7312		N/A			
1P53-F588B	2	AC	½	SE	EO -Q	T2022					
	C-13	ACTIVE	CH	C	EC -RO	T7312				RO-30	
					LD -2Y	T7312		N/A			
1P53-F593A	2	A	1	MA	EO -Q	T2022					
	D-9	ACTIVE	BA	C	EC -Q	T2022					
					LJ -PB	T7312		1,000.0			

SYSTEM: PENETRATION PRESSURIZATION (P53) DWG. NO. D-302-762

VALVE/ DEVICE NO.	CLASS AND DWG. COOR.	VALVE CATEGORY/ ACTIVE OR PASSIVE	SIZE (in.) AND TYPE	ACTUATOR TYPE/ NORMAL POSITION	TEST REQ. AND FREQ.	SURV INST. NO. SVI-P53	STROKE TIME REFERENCE VALUE(sec)	LEAKAGE LIMIT(sccm gpm or bubbles)	DEVICE SET PRESS. REFERENCE VALUE(psi)	JUSTIFI-CATIONS & RELIEF REQUEST NO.	REMARKS
1P53-F593B	2	A	1	MA	EO -Q	T2022					
	D-12	ACTIVE	BA	C	EC -Q	T2022					
					LJ -PB	T7312		1,000.0			
1P53-F594A	2	A	1	MA	EO -Q	T2022					
	D-10	ACTIVE	BA	C	EC -Q	T2022					
					LJ -PB	T7312		1,000.0			
1P53-F594B	2	A	1	MA	EO -Q	T2022					
	D-13	ACTIVE	BA	C	EC -Q	T2022					
					LJ -PB	T7312		1,000.0			
1P53-F595	2	AC	1	SE	SP -2YD	T8312			2.5		
	E-11	ACTIVE	SD	C	LJ -PB	T8312		1,000.0			
1P53-F596	2	AC	1	SE	SP -2YD	T8312			2.5		
	E-12	ACTIVE	SD	C	LJ -PB	T8312		1,000.0			
1P53-F601A	O2	AC	½	SE	EO -RO	T2021				RO-17	
	H-7	ACTIVE	CH	C	EC -RO	T9023				RO-17	
					LD -2Y	T9023		N/A			
1P53-F601B	O2	AC	½	SE	EO -RO	T2021				RO-17	
	H-10	ACTIVE	CH	C	EC -RO	T9023				RO-17	
					LD -2Y	T9023		N/A			
1P53-F602A	O2	AC	½	SE	EO -RO	T2021				RO-17	
	G-7	ACTIVE	CH	C	EC -RO	T9023				RO-17	
					LD -2Y	T9023		N/A			

SYSTEM: PENETRATION PRESSURIZATION (P53) DWG. NO. D-302-762

VALVE/ DEVICE NO.	CLASS AND DWG. COOR.	VALVE CATEGORY/ ACTIVE OR PASSIVE	SIZE (in.) AND TYPE	ACTUATOR TYPE/ NORMAL POSITION	TEST REQ. AND FREQ.	SURV INST. NO. SVI-P53	STROKE TIME REFERENCE VALUE(sec)	LEAKAGE LIMIT(sccm gpm or bubbles)	DEVICE SET PRESS. REFERENCE VALUE(psi)	JUSTIFI-CATIONS & RELIEF REQUEST NO.	REMARKS
1P53-F602B	O2	AC	½	SE	E0 -RO	T2021				RO-17	
	G-10	ACTIVE	CH	C	EC -RO	T9023				RO-17	
					LD -2Y	T9023		N/A			
1P53-F633A	O2	A	1	MA	E0 -RO	T2021				RO-17	
	H-7	ACTIVE	BA	C	EC -RO	T2021				RO-17	
					LD -2Y	T2021		N/A			
1P53-F633B	O2	A	1	MA	E0 -RO	T2021				RO-17	
	H-10	ACTIVE	BA	C	EC -RO	T2021				RO-17	
					LD -2Y	T2021		N/A			
1P53-F638	O2	AC	1	SE	SP -2YD	T2021			2.5		
	J-9	ACTIVE	SD	C	LD -2Y	T2021		1,180.0			

SYSTEM: FIRE SERVICE WATER (P54) DWG. NO. D-914-003

VALVE/ DEVICE NO.	CLASS AND DWG. COOR.	VALVE CATEGORY/ ACTIVE OR PASSIVE	SIZE (in.) AND TYPE	ACTUATOR TYPE/ NORMAL POSITION	TEST REQ. AND FREQ.	SURV INST. NO. SVI-P54	STROKE TIME REFERENCE VALUE(sec)	LEAKAGE LIMIT(sccm gpm or bubbles)	DEVICE SET PRESS. REFERENCE VALUE(psi)	JUSTIFI-CATIONS & RELIEF REQUEST NO.	REMARKS
1P54-F726	2	A	4	MA	LJ -PB	T9406					
	G-5	PASSIVE	GT	LC	PI -2Y	T9406/T2004 (GEN)		1,000.0			
1P54-F727	2	A	4	MA	LJ -PB	T9406					
	B-8	PASSIVE	GT	LC	PI -2Y	T9406/T2004 (GEN)		1,000.0			

SYSTEM: FIRE SERVICE CARBON DIOXIDE (P54) DWG. NO. D-914-005

VALVE/ DEVICE NO.	CLASS AND DWG. COOR.	VALVE CATEGORY/ ACTIVE OR PASSIVE	SIZE (in.) AND TYPE	ACTUATOR TYPE/ NORMAL POSITION	TEST REQ. AND FREQ.	SURV INST. NO. SVI-P54	STROKE TIME REFERENCE VALUE(sec)	LEAKAGE LIMIT(sccm gpm or bubbles)	DEVICE SET PRESS. REFERENCE VALUE(psi)	JUSTIFI-CATIONS & RELIEF REQUEST NO.	REMARKS
1P54-F340	2	A	4	MO	EC -Q	T2002					
	G-7	ACTIVE	GT	C	STC-Q	T2002	15.0*				
					LJ -PB	T9210		1,000.0			
					PI -2Y	T2002					
1P54-F395	O2	B	4	MO	EC -Q	T2002					
	G-6	ACTIVE	GT	O	STC-Q	T2002	14.0*				
					PI -2Y	T2002					
1P54-F1098	2	AC	4	SE	EO - CVCM	T9210/T2003				RO-6	
	G-7	ACTIVE	CH	C	EC - CVCM	T9210/T2003				RO-6	
					LJ -PB	T9210		1,000.0			
1P54-F5604	O2	C	¾	SE	RT -10Y	T2100 (GEN)			500.0 (S/N 009)		490.0 (S/N 015)
	G-7	ACTIVE	SV	C							

SYSTEM: SAFETY RELATED INSTRUMENT AIR (57) DWG. NO. D-302-271

VALVE/ DEVICE NO.	CLASS AND DWG. COOR.	VALVE CATEGORY/ ACTIVE OR PASSIVE	SIZE (in.) AND TYPE	ACTUATOR TYPE/ NORMAL POSITION	TEST REQ. AND FREQ.	SURV INST. NO. SVI-P57	STROKE TIME REFERENCE VALUE(sec)	LEAKAGE LIMIT(sccm gpm or bubbles)	DEVICE SET PRESS. REFERENCE VALUE(psi)	JUSTIFI-CATIONS & RELIEF REQUEST NO.	REMARKS
1P57-F015A	2	A	1	MO	EC -Q	T2001					SVI-P57-T2003
	B-7	ACTIVE	GL	O	STC-Q	T2001	11.0*			VR-3	(PI) REMOTE
					LJ -PB	T9304		1,000.0			S/D LOCAL BRKR
					PI -2Y	T2001				VR-3	VR-Pending 10239
1P57-F015B	2	A	1	MO	EC -Q	T2001					
	G-7	ACTIVE	GL	O	STC-Q	T2001	10.7*			VR-3	
					LJ -PB	T9116		1,000.0			
					PI -2Y	T2001				VR-3	VR-Pending 26272
1P57-F020A	3	B	1	MO	EC -Q	T2001					SVI-P57-T2003
	B-5	ACTIVE	GL	O	STC-Q	T2001	11.0*			VR-3	(PI) REMOTE
					PI -2Y	T2001				VR-3	S/D LOCAL BRKR
											VR-Pending 14033
1P57-F020B	3	B	1	MO	EC -Q	T2001					
	G-5	ACTIVE	GL	O	STC-Q	T2001	10.9*			VR-3	
					PI -2Y	T2001				VR-3	VR-Pending 15924
1P57-F524A	2	AC	1	SE	EO -RO	T2005				RO-23	
	B-6	ACTIVE	CH	C	EC -CVCM	T9304/T2005				RO-23	
					LJ -PB	T9304		1,000.0			
1P57-F524B	2	AC	1	SE	EO -RO	T2005				RO-23	
	G-6	ACTIVE	CH	C	EC -CVCM	T9116/T2005				RO-23	
					LJ -PB	T9116		1,000.0			
1P57-F555A	3	AC	1	SE	EO -RO	T2005(GEN)				RO-27	
	C-8	ACTIVE	CH	C	EC -RO	T2200				RO-27	
					LD -2Y	T2200		295.0			

VALVE/ DEVICE NO.	CLASS AND DWG. COOR.	VALVE CATEGORY/ ACTIVE OR PASSIVE	SIZE (in.) AND TYPE	ACTUATOR TYPE/ NORMAL POSITION	TEST REQ. AND FREQ.	SURV INST. NO. SVI-P57	STROKE TIME REFERENCE VALUE(sec)	LEAKAGE LIMIT(sccm gpm or bubbles)	DEVICE SET PRESS. REFERENCE VALUE(psi)	JUSTIFI-CATIONS & RELIEF REQUEST NO.	REMARKS
1P57-F555B	3	AC	1	SE	EO -RO	T2005(GEN)				RO-27	
	H-8	ACTIVE	CH	C	EC -RO	T2201				RO-27	
					LD -2Y	T2201		295.0			
1P57-F556A	3	AC	1	SE	EO -RO	T2005(GEN)				RO-27	
	C-8	ACTIVE	CH	C	EC -RO	T2200				RO-27	
					LD -2Y	T2200		295.0			
1P57-F556B	3	AC	1	SE	EO -RO	T2005(GEN)				RO-27	
	H-8	ACTIVE	CH	C	EC -RO	T2201				RO-27	
					LD -2Y	T2201		295.0			
1P57-F559A	3	AC	1	SE	RT -10Y	T2100 (GEN)		0.167	180.0		
	C-6	ACTIVE	SV	C							
1P57-F559B	3	AC	1	SE	RT -10Y	T2100 (GEN)		0.167	180.0		
	G-6	ACTIVE	SV	C							
1P57-F569B	3	AC	1	SE	RT -10Y	T2100 (GEN)		40.0	150.0		
	G-3	ACTIVE	SV	C				BUBBLES			
1P57-F572B	3	AC	1	SE	EO -RO	T2004				RO-19	
	G-2	ACTIVE	CH	C	EC -RO	T2004				RO-19	
					LD -2Y	T2004		188.7			
1P57-F574B	3	AC	1	SE	EO -RO	T2004				RO-19	
	G-2	ACTIVE	CH	C	EC -RO	T2004				RO-19	
					LD -2Y	T2004		188.7			

SYSTEM: NITROGEN (P86) DWG. NO. D-302-950

VALVE/ DEVICE NO.	CLASS AND DWG. COOR.	VALVE CATEGORY/ ACTIVE OR PASSIVE	SIZE (in.) AND TYPE	ACTUATOR TYPE/ NORMAL POSITION	TEST REQ. AND FREQ.	SURV INST. NO. SVI-P86	STROKE TIME REFERENCE VALUE(sec)	LEAKAGE LIMIT(sccm gpm or bubbles)	DEVICE SET PRESS. REFERENCE VALUE(psi)	JUSTIFI-CATIONS & RELIEF REQUEST NO.	REMARKS
1P86-F002	2	A	2	MO	EC -Q	T2001					
	F-7	ACTIVE	GL	C	STC-Q	T2001	14.0*			VR-3	
					LJ -PB	T9117		1,000.0			
					PI -2Y	T2001				VR-3	VR-Pending 43284
1P86-F528	2	AC	2	SE	EO -RO	T2005 (GEN)				RO-26	
	F-6	ACTIVE	CH	C	EC -CVCM	T9117				RO-26	
					LJ -PB	T9117		1,000.0			

SYSTEM: POST ACCIDENT SAMPLING (P87) DWG. NO. D-302-431

VALVE/ DEVICE NO.	CLASS AND DWG. COOR.	VALVE CATEGORY/ ACTIVE OR PASSIVE	SIZE (in.) AND TYPE	ACTUATOR TYPE/ NORMAL POSITION	TEST REQ. AND FREQ.	SURV INST. NO. SVI-P87	STROKE TIME REFERENCE VALUE(sec)	LEAKAGE LIMIT(sccm gpm or bubbles)	DEVICE SET PRESS. REFERENCE VALUE(psi)	JUSTIFI-CATIONS & RELIEF REQUEST NO.	REMARKS
1P87-F001	2	B	3/8	SO	EO -Q	T2001					
	C-12	ACTIVE	GL	C	STO-Q	T2001	2.0*				
					FS -Q	T2001					
					PI -2Y	T2002					
1P87-F007	2	B	3/8	SO	EO -Q	T2001					
	D-12	ACTIVE	GL	C	STO-Q	T2001	2.0*				
					FS -Q	T2001					
					PI -2Y	T2002					
1P87-F025	2	B	3/8	SO	EO -Q	T2001					
	F-12	ACTIVE	GL	C	STO-Q	T2001	2.0*				
					FS -Q	T2001					
					PI -2Y	T2002					
1P87-F028	2	B	3/8	SO	EO -Q	T2001					
	G-12	ACTIVE	GL	C	STO-Q	T2001	2.0*				
					FS -Q	T2001					
					PI -2Y	T2002					
1P87-F037	2	A	3/4	SO	EO -Q	T2001					CONTAINMENT
	H-11	ACTIVE	GL	C	EC -Q	T2001					INSTRUMENT
					STO-Q	T2001	2.0*				LINE
					STC-Q	T2001	2.0*				
					FS -Q	T2001					
					LW -PB	T8401		0.5			
					PI -2Y	T8401/T2004 (GEN)					

VALVE/ DEVICE NO.	CLASS AND DWG. COOR.	VALVE CATEGORY/ ACTIVE OR PASSIVE	SIZE (in.) AND TYPE	ACTUATOR TYPE/ NORMAL POSITION	TEST REQ. AND FREQ.	SURV INST. NO. SVI-P87	STROKE TIME REFERENCE VALUE(sec)	LEAKAGE LIMIT(sccm gpm or bubbles)	DEVICE SET PRESS. REFERENCE VALUE(psi)	JUSTIFI-CATIONS & RELIEF REQUEST NO.	REMARKS
1P87-F046	2	A	3/4	SO	EO -Q	T2001					
	E-10	ACTIVE	GL	C	EC -Q	T2001					
					STO-Q	T2001	2.0*				
					STC-Q	T2001	2.0*				
					FS -Q	T2001					
					LJ -PB	T9413		1,000.0			
					PI -2Y	T9413					
1P87-F049	2	A	3/4	SO	EO -Q	T2001					
	D-10	ACTIVE	GL	C	EC -Q	T2001					
					STO-Q	T2001	2.0*				
					STC-Q	T2001	2.0*				
					FS -Q	T2001					
					LJ -PB	T9413		1,000.0			
					PI -2Y	T9413/T2002					
1P87-F052	2	A	3/4	SO	EO -Q	T2001					
	E-9	ACTIVE	GL	C	EC -Q	T2001					
					STO-Q	T2001	2.0*				
					STC-Q	T2001	2.0*				
					FS -Q	T2001					
					LJ -PB	T9413		1,000.0			
					PI -2Y	T9413					
1P87-F055	2	A	3/4	SO	EO -Q	T2001					
	D-9	ACTIVE	GL	C	EC -Q	T2001					
					STO-Q	T2001	2.0*				
					STC-Q	T2001	2.0*				
					FS -Q	T2001					
					LJ -PB	T9413		1,000.0			
					PI -2Y	T9413/T2002					

VALVE/ DEVICE NO.	CLASS AND DWG. COOR.	VALVE CATEGORY/ ACTIVE OR PASSIVE	SIZE (in.) AND TYPE	ACTUATOR TYPE/ NORMAL POSITION	TEST REQ. AND FREQ.	SURV INST. NO. SVI-P87	STROKE TIME REFERENCE VALUE(sec)	LEAKAGE LIMIT(sccm gpm or bubbles)	DEVICE SET PRESS. REFERENCE VALUE(psi)	JUSTIFI-CATIONS & RELIEF REQUEST NO.	REMARKS
1P87-F065	2	A	1/2	SO	EO -Q	T2001					CONTAINMENT
	C-5	ACTIVE	GL	C	EC -Q	T2001					INSTRUMENT
					STO-Q	T2001	2.0*				LINE
					STC-Q	T2001	2.0*				
					FS -Q	T2001					
					LJ -PB	T9318 (M51)		1,000.0			
					PI -2Y	T9318 (M51)/ T2007B (M51)					
1P87-F071	2	A	1/2	SO	EO -Q	T2001					CONTAINMENT
	B-8	ACTIVE	GL	C	EC -Q	T2001					INSTRUMENT
					STO-Q	T2001	2.0*				LINE
					STC-Q	T2001	2.0*				
					FS -Q	T2001					
					LJ -PB	T9318 (M51)		1,000.0			
					PI -2Y	T9318 (M51)/ T2007B (M51)					
1P87-F074	2	A	1/2	SO	EO -Q	T2001					CONTAINMENT
	B-8	ACTIVE	GL	C	EC -Q	T2001					INSTRUMENT
					STO-Q	T2001	2.0*				LINE
					STC-Q	T2001	2.0*				
					FS -Q	T2001					
					LJ -PB	T9318 (M51)		1,000.0			
					PI -2Y	T9318 (M51)/ T2007B (M51)					

VALVE/ DEVICE NO.	CLASS AND DWG. COOR.	VALVE CATEGORY/ ACTIVE OR PASSIVE	SIZE (in.) AND TYPE	ACTUATOR TYPE/ NORMAL POSITION	TEST REQ. AND FREQ.	SURV INST. NO. SVI-P87	STROKE TIME REFERENCE VALUE(sec)	LEAKAGE LIMIT(sccm gpm or bubbles)	DEVICE SET PRESS. REFERENCE VALUE(psi)	JUSTIFI-CATIONS & RELIEF REQUEST NO.	REMARKS
1P87-F077	2	A	1/2	SO	EO -Q	T2001					CONTAINMENT
	A-8	ACTIVE	GL	C	EC -Q	T2001					INSTRUMENT
					STO-Q	T2001	2.0*				LINE
					STC-Q	T2001	2.0*				
					FS -Q	T2001					
					LJ -PB	T9318 (M51)		1,000.0			
					PI -2Y	T9318 (M51)/ T2007B (M51)					
1P87-F083	2	A	1/2	SO	EO -Q	T2001					
	H-8	ACTIVE	GL	C	EC -Q	T2001					
					STO-Q	T2001	2.0*				
					STC-Q	T2001	2.0*				
					FS -Q	T2001					
					LJ -PB	T9429 (E12)		1,000.0			
					PI -2Y	T9429 (E12)/ T2004 (GEN)					
1P87-F264	2	A	1/2	SO	EO -Q	T2001					
	H-8	ACTIVE	GL	C	EC -Q	T2001					
					STO-Q	T2001	2.0*				
					STC-Q	T2001	2.0*				
					FS -Q	T2001					
					LJ -PB	T9429 (E12)		1,000.0			
					PI -2Y	T9429 (E12)/ T2004 (GEN)					
1P87-F277	2	AC	1/4	SE	RT-10Y	T2100 (GEN)			1650 ±40		
	D-9	ACTIVE	RE	C	LJ -PB	T9413		1,000.0			

SYSTEM: STANDBY DIESEL GENERATOR STARTING AIR (R44) DWG. NO. D-302-351

VALVE/ DEVICE NO.	CLASS AND DWG. COOR.	VALVE CATEGORY/ ACTIVE OR PASSIVE	SIZE (in.) AND TYPE	ACTUATOR TYPE/ NORMAL POSITION	TEST REQ. AND FREQ.	SURV INST. NO. SVI-R44	STROKE TIME REFERENCE VALUE(sec)	LEAKAGE LIMIT(sccm gpm or bubbles)	DEVICE SET PRESS. REFERENCE VALUE(psi)	JUSTIFI-CATIONS & RELIEF REQUEST NO.	REMARKS
1R44-F010A	3	B	1/4	SO	EO -M	T2001					Skid-Mounted
	G-12	ACTIVE	GL	C	STO-M	T2001	N/A				Note 13
					FS -M	T2001					
1R44-F011A	3	B	3	AO	EO -M	T2001					Skid-Mounted
	G-12	ACTIVE	GT	C	STO-M	T2001	N/A				Note 13
					FS -M	T2001					
1R44-F010B	3	B	1/4	SO	EO -M	T2002					Skid-Mounted
	D-12	ACTIVE	GL	C	STO-M	T2002	N/A				Note 13
					FS -M	T2002					
1R44-F011B	3	B	3	AO	EO -M	T2002					Skid-Mounted
	D-12	ACTIVE	GT	C	STO-M	T2002	N/A				Note 13
					FS -M	T2002					
1R44-F015A	3	B	1/4	SO	EO -M	T2001					Skid-Mounted
	G-11	ACTIVE	GL	C	STO-M	T2001	N/A				Note 13
					FS -M	T2001					
1R44-F016A	3	B	3	AO	EO -M	T2001					Skid-Mounted
	G-11	ACTIVE	GT	C	STO-M	T2001	N/A				Note 13
					FS -M	T2001					
1R44-F015B	3	B	1/4	SO	EO -M	T2002					Skid-Mounted
	D-11	ACTIVE	GL	C	STO-M	T2002	N/A				Note 13
					FS -M	T2002					
1R44-F016B	3	B	3	AO	EO -M	T2002					Skid-Mounted
	D-11	ACTIVE	GT	C	STO-M	T2002	N/A				Note 13
					FS -M	T2002					

SYSTEM: STANDBY DIESEL GENERATOR STARTING AIR (R44) DWG. NO. D-302-351

VALVE/ DEVICE NO.	CLASS AND DWG. COOR.	VALVE CATEGORY/ ACTIVE OR PASSIVE	SIZE (in.) AND TYPE	ACTUATOR TYPE/ NORMAL POSITION	TEST REQ. AND FREQ.	SURV INST. NO. SVI-R44	STROKE TIME REFERENCE VALUE(sec)	LEAKAGE LIMIT(sccm gpm or bubbles)	DEVICE SET PRESS. REFERENCE VALUE(psi)	JUSTIFI-CATIONS & RELIEF REQUEST NO.	REMARKS
1R44-F020A	3 G-12	B ACTIVE	1/4 GL	SO C	EO -M STO-M FS -M	T2001 T2001 T2001	N/A				Skid-Mounted Note 13
1R44-F021A	3 G-12	B ACTIVE	3 GT	AO C	EO -M STO-M FS -M	T2001 T2001 T2001	N/A				Skid-Mounted Note 13
1R44-F020B	3 D-12	B ACTIVE	1/4 GL	SO C	EO -M STO-M FS -M	T2002 T2002 T2002	N/A				Skid-Mounted Note 13
1R44-F021B	3 D-12	B ACTIVE	3 GT	AO C	EO -M STO-M FS -M	T2002 T2002 T2002	N/A				Skid-Mounted Note 13
1R44-F025A	3 G-12	B ACTIVE	1/4 GL	SO C	EO -M STO-M FS -M	T2001 T2001 T2001	N/A				Skid-Mounted Note 13
1R44-F026A	3 G-12	B ACTIVE	3 GT	AO C	EO -M STO-M FS -M	T2001 T2001 T2001	N/A				Skid-Mounted Note 13
1R44-F025B	3 D-12	B ACTIVE	1/4 GL	SO C	EO -M STO-M FS -M	T2002 T2002 T2002	N/A				Skid-Mounted Note 13
1R44-F026B	3 D-12	B ACTIVE	3 GT	AO C	EO -M STO-M FS -M	T2002 T2002 T2002	N/A				Skid-Mounted Note 13

SYSTEM: STANDBY DIESEL GENERATOR STARTING AIR (R44) DWG. NO. D-302-351

VALVE/ DEVICE NO.	CLASS AND DWG. COOR.	VALVE CATEGORY/ ACTIVE OR PASSIVE	SIZE (in.) AND TYPE	ACTUATOR TYPE/ NORMAL POSITION	TEST REQ. AND FREQ.	SURV INST. NO. SVI-R44	STROKE TIME REFERENCE VALUE(sec)	LEAKAGE LIMIT(sccm gpm or bubbles)	DEVICE SET PRESS. REFERENCE VALUE(psi)	JUSTIFI-CATIONS & RELIEF REQUEST NO.	REMARKS
1R44-F503A	3 E-6	C ACTIVE	1 1/2 CH	SE C	EO -M EC -Q	T1317 (R43) T2001 (R45)					
1R44-F503B	3 C-6	C ACTIVE	1 1/2 CH	SE C	EO -M EC -Q	T1318 (R43) T2002 (R45)					
1R44-F504A	3 E-9	C ACTIVE	1 1/2 CH	SE C	EO -M EC -Q	T1317 (R43) T2001 (R45)					
1R44-F504B	3 C-9	C ACTIVE	1 1/2 CH	SE C	EO -M EC -Q	T1318 (R43) T2002 (R45)					
1R44-F508A	3 E-7	C ACTIVE	1 SV	SE C	RT -10Y	T2100 (GEN)			278.0		275.0 ADJUST FOR COLD SET
1R44-F508B	3 C-7	C ACTIVE	1 SV	SE C	RT -10Y	T2100 (GEN)			278.0		275.0 ADJUST FOR COLD SET
1R44-F518A	3 E-10	C ACTIVE	1 SV	SE C	RT -10Y	T2100 (GEN)			278.0		275.0 ADJUST FOR COLD SET
1R44-F518B	3 C-10	C ACTIVE	1 SV	SE C	RT -10Y	T2100 (GEN)			278.0		275.0 ADJUST FOR COLD SET

SYSTEM: HPCS DIESEL GENERATOR STARTING AIR (E22A) DWG. NO. D-302-358

VALVE/ DEVICE NO.	CLASS AND DWG. COOR.	VALVE CATEGORY/ ACTIVE OR PASSIVE	SIZE (in.) AND TYPE	ACTUATOR TYPE/ NORMAL POSITION	TEST REQ. AND FREQ.	SURV INST. NO. SVI-E22	STROKE TIME REFERENCE VALUE(sec)	LEAKAGE LIMIT(sccm gpm or bubbles)	DEVICE SET PRESS. REFERENCE VALUE(psi)	JUSTIFI-CATIONS & RELIEF REQUEST NO.	REMARKS
1E22-F533A	3 B-7	C ACTIVE	¾ SV	SE C	RT -10Y	T2100 (GEN)			250.0		
1E22-F533B	3 F-7	C ACTIVE	¾ SV	SE C	RT -10Y	T2100 (GEN)			250.0		
1E22-F538A	3 B-7	C ACTIVE	1 1/2 CH	SE C	EO -M EC -Q	T1319 T2003 (R45)					
1E22-F538B	3 F-7	C ACTIVE	1 1/2 CH	SE C	EO -M EC -Q	T1319 T2003 (R45)					
1E22-F541A	3 C-3	B ACTIVE	1 1/2 GT	AO C	EO -M STO-M FS -M	T1319 T1319 T1319	N/A				Skid-Mounted Note 13
1E22-F541B	3 F-3	B ACTIVE	1 1/2 GT	AO C	EO -M STO-M FS -M	T1319 T1319 T1319	N/A				Skid-Mounted Note 13
1E22-F543A	3 C-4	B ACTIVE	1 1/2 GT	SO C	EO -M STO-M FS -M	T1319 T1319 T1319	N/A				Skid-Mounted Note 13
1E22-F543B	3 F-4	B ACTIVE	1 1/2 GT	SO C	EO -M STO-M FS -M	T1319 T1319 T1319	N/A				Skid-Mounted Note 13

SYSTEM: STANDBY DIESEL GENERATOR FUEL OIL (R45) DWG. NO. D-302-352

VALVE/ DEVICE NO.	CLASS AND DWG. COOR.	VALVE CATEGORY/ ACTIVE OR PASSIVE	SIZE (in.) AND TYPE	ACTUATOR TYPE/ NORMAL POSITION	TEST REQ. AND FREQ.	SURV INST. NO. SVI-R45	STROKE TIME REFERENCE VALUE(sec)	LEAKAGE LIMIT(sccm gpm or bubbles)	DEVICE SET PRESS. REFERENCE VALUE(psi)	JUSTIFI-CATIONS & RELIEF REQUEST NO.	REMARKS
1R45-F502A	3 H-12	C ACTIVE	3 CH	SE C	EO -Q EC -Q	T2001 T2001					
1R45-F502B	3 H-6	C ACTIVE	3 CH	SE C	EO -Q EC -Q	T2002 T2002					
1R45-F548A	3 H-11	C ACTIVE	3 CH	SE C	EO -Q EC -Q	T2001 T2001					
1R45-F548B	3 H-5	C ACTIVE	3 CH	SE C	EO -Q EC -Q	T2002 T2002					
1R45-F559A	3 D-11	C ACTIVE	1 1/2 RE	SE C	RT 10Y	T2100(GEN)			71.0		4.0 psi BACK PRESSURE
1R45-F559B	3 D-5	C ACTIVE	1 1/2 RE	SE C	RT 10Y	T2100(GEN)			71.0		4.0 psi BACK PRESSURE
1R45-F577A	3 G-10	C ACTIVE	3/4 CH	SE C	EO -Q EC -CVCM	T2001 T2000(GEN)				RO-33	Sample Disassembly
1R45-F577B	3 G-4	C ACTIVE	3/4 CH	SE C	EO -Q EC -CVCM	T2002 T2000(GEN)				RO-33	Sample Disassembly
1R45-F578A	3 G-10	C ACTIVE	3/4 CH	SE C	EO -Q EC -CVCM	T2001 T2000(GEN)				RO-33	Sample Disassembly
1R45-F578B	3 G-4	C ACTIVE	3/4 CH	SE C	EO -Q EC -CVCM	T2002 T2000(GEN)				RO-33	Sample Disassembly

SYSTEM: STANDBY DIESEL GENERATOR FUEL OIL (R45) DWG. NO. D-302-356

VALVE/ DEVICE NO.	CLASS AND DWG. COOR.	VALVE CATEGORY/ ACTIVE OR PASSIVE	SIZE (in.) AND TYPE	ACTUATOR TYPE/ NORMAL POSITION	TEST REQ. AND FREQ.	SURV INST. NO. SVI-R45	STROKE TIME REFERENCE VALUE(sec)	LEAKAGE LIMIT(sccm gpm or bubbles)	DEVICE SET PRESS. REFERENCE VALUE(psi)	JUSTIFI-CATIONS & RELIEF REQUEST NO.	REMARKS
1R45-F510A	3	C	3	SE	EO -Q	T2003					
	H-6	ACTIVE	CH	C	EC -Q	T2003					
1R45-F510B	3	C	3	SE	EO -Q	T2003					
	H-6	ACTIVE	CH	C	EC -Q	T2003					
1R45-F579A	3	C	3/4	SE	EO -Q	T2003					Sample
	G-5	ACTIVE	CH	C	EC -CVCM	T2000(GEN)				RO-33	Disassembly
1R45-F579B	3	C	3/4	SE	EO -Q	T2003					Sample
	G-4	ACTIVE	CH	C	EC -CVCM	T2000(GEN)				RO-33	Disassembly

SYSTEM: STANDBY DIESEL GENERATOR JACKET WATER (R46) DWG. NO. D-302-354

VALVE/ DEVICE NO.	CLASS AND DWG. COOR.	VALVE CATEGORY/ ACTIVE OR PASSIVE	SIZE (in.) AND TYPE	ACTUATOR TYPE/ NORMAL POSITION	TEST REQ. AND FREQ.	SURV INST. NO. SVI-R46	STROKE TIME REFERENCE VALUE(sec)	LEAKAGE LIMIT(sccm gpm or bubbles)	DEVICE SET PRESS. REFERENCE VALUE(psi)	JUSTIFI-CATIONS & RELIEF REQUEST NO.	REMARKS
1R46-F504A	3	C	1	SE	EO -M	T1317 (R43)					
	E-9	ACTIVE	CH	O	EC -M	T1317 (R43)					
1R46-F504B	3	C	1	SE	EO -M	T1318 (R43)					
	E-3	ACTIVE	CH	O	EC -M	T1318 (R43)					
1R46-F508A	3	C	8	SE	EO -M	T1317 (R43)					REFERENCE
	F-12	ACTIVE	CH	C	EC -M	T1317 (R43)					IEB: 83-03
1R46-F508B	3	C	8	SE	EO -M	T1318 (R43)					REFERENCE
	F-6	ACTIVE	CH	C	EC -M	T1318 (R43)					IEB: 83-03

SYSTEM: STANDBY DIESEL GENERATOR LUBE OIL (R47) DWG. NO. D-302-353

VALVE/ DEVICE NO.	CLASS AND DWG. COOR.	VALVE CATEGORY/ ACTIVE OR PASSIVE	SIZE (in.) AND TYPE	ACTUATOR TYPE/ NORMAL POSITION	TEST REQ. AND FREQ.	SURV INST. NO. SVI-R47	STROKE TIME REFERENCE VALUE(sec)	LEAKAGE LIMIT(sccm gpm or bubbles)	DEVICE SET PRESS. REFERENCE VALUE(psi)	JUSTIFI-CATIONS & RELIEF REQUEST NO.	REMARKS
1R47-F502A	3 J-11	C ACTIVE	6 CH	SE C	EO -M EC -M	T1317 (R43) T1317 (R43)					
1R47-F502B	3 J-5	C ACTIVE	6 CH	SE C	EO -M EC -M	T1318 (R43) T1318 (R43)					
1R47-F504A	3 H-10	C ACTIVE	2 RE	SE C	RT -10Y	T2100 (GEN)			44.0		6.0 psi BACK PRESSURE
1R47-F504B	3 H-3	C ACTIVE	2 RE	SE C	RT -10Y	T2100 (GEN)			44.0		6.0 psi BACK PRESSURE
1R47-F506A	3 G-12	C ACTIVE	1 1/2 RE	SE C	RT -10Y	T2100 (GEN)			70.0		
1R47-F506B	3 G-5	C ACTIVE	1 1/2 RE	SE C	RT -10Y	T2100 (GEN)			70.0		

3.5 Valve Test Table Notes

NOTE 1: The exercising and stroke timing of the 1B21-F005 with SVI-B21-T2004 is for reasons other than satisfying Technical Specification requirements (ASME Code). Reference resolution to NRC concerns on the ISTP submittal (NRC Site Meeting Summary Correspondence Dated May 29, 1991 Log No. PY-NRR/CEI-0559L).

NOTE 2: The scram volume vent and drain valves do not have a specific leakage limit and seat leakage is being tested for reasons other than satisfying Technical Specification requirement (ASME Code). The testing requirement for seat leakage, to address the concerns of IEN 85-72 involving failures of Scram Discharge Volume Vent and Drain Valves, is specified in PTI-C11-P0007 and will be performed after maintenance only.

NOTE 3: The inboard MSIV Accumulator check valves are tested at 68.0 to 69.0 psig.

NOTE 4: The outboard MSIV Accumulator check valves are tested at 43.0 to 45.0 psig with an acceptance criteria of 1873.4 SCCM, however DES is to be notified if leakage exceeds 849.4 SCCM.

NOTE 5: Valves 1M16-F010A, 1M16-F010B, 1M17-F015, 1M17-F025, 1M17-F035 and 1M17-F045 may have their closed stroke times rounded down as not to exceed the maximum closing stroke times (e.g., 5.04 sec may be rounded down to 5 sec.). Their open stroke times may not be rounded.

NOTE 6: Each Main Steam Line leakage is less than or equal to 100 SCF per hour as long as the total leakage rate through all four main steam lines is less than or equal to 250 SCF per hour.

NOTE 7: Deleted based on implementation of DCP 02-213 and 02-213A.

NOTE 8: Valves 0P45-F006A, 0P45-F006B, 0P45-F007A, 0P45-F007B, 0P45-F009A, and 0P45-F009B will be tested prior to the ESW Sluice Gates being inflated on a yearly bases. They will additionally be tested quarterly when required to be in operation. This testing includes Exercise Open, Exercise Close, and leak testing to ensure system integrity. When the ESW Sluice Gates are not required to inflated this testing will not be performed. This approach is an OM Code accepted method per paragraph ISTC-3570, Valves in Systems Out of Service.

NOTE 9: The 200 gpm leak rate test on Feedwater check valves F032A/B and F559A/B is based on Appendix A to Calculation 3.2.15.7 "Feedwater Line Break Accident"; letter PY-CEI/NRR-2370L dated March 4, 1999; the NRC Safety Evaluation for Amendment 105 dated March 26, 1999 (PY-NRR/CEI-0964L); an NRC Clarification Letter on Amendment 105, dated April 27, 1999 (PY-NRR/CEI-0976L); the Exception to Regulatory Guide 1.163 "Performance Based Containment Leak-Test Program" provided for the Feedwater check valves (see USAR Table 1.8-1 and Technical Specification 5.5.12); and Calculation N27-054 "Feedwater Check Valve Leak Test Acceptance Criteria". If the check valves do not pass the water leak test acceptance criteria curve within Calculation N27-054 which was developed to meet the intent of OM Code, paragraph ISTC-3630(b)(4), then a visual examination using a fiberscope is performed to verify significant orifice seat defect(s) do not exist. This inspection includes lifting the check valve disc up off of its seat. Significant observed defects or any leak rate test results equivalent to more than 200 gpm at 1.1 Pa require additional investigation/repair and retest per ISTP program requirements.

NOTE 10: Based on issuance of GE SIL No. 643 and NRC Information Notice 2002-15, Perry initiated Condition Report CR 02-00995. Based on all the evaluation performed to eliminate the potential for Hydrogen detonation of the Reactor Core Isolation Cooling Injection/Residual Heat Removal Head Spray piping, Calculation E51-031 was initiated. This calculation has determined that allowable leakage for 1E12-F023 and 1E51-F013 when tested in parallel is 0.036 gpm.

NOTE 11: The manual swale isolation valves are to be full exercised each quarter in accordance with Condition Report 06-00428. Currently this is accomplished via Repetitive Maintenance Plan Number 89362 and completion of a Test Requirements Applicability form (NOP-WM-2003-03) to document Technical Specification compliance.

NOTE 12: The solenoid valves are proven operable by remotely actuating the SRV to verify open and close capability of the relief valve prior to resumption of electric power generation. The solenoid operated valves will be tested at the Technical Specification Surveillance required frequency of testing. ISTC-1200, the valves associated with the control circuitry of ADS/SRVs are considered skid-mounted.

NOTE 13: At least one set of diesel starting air valves shall be verified operable during monthly Division 1 and Division 2 diesel generator surveillance testing with both sets of diesel starting air solenoids being tested quarterly per a separate surveillance instruction. Satisfactory diesel start times shall demonstrate operability of the starting air valves.

The operability of Division 3 HPCS starting air valves shall be determined by monitoring HPCS diesel starting time.

NOTE 14: These valves (1C11-114 typical of 177) are classified as skid-mounted and verified to function through testing of each respective hydraulic control unit, of which the valve is a subcomponent. The HCUs are verified functional per satisfaction of Technical Specification Surveillance Requirements SR 3.1.3.4, 3.1.4.1, 3.1.4.2, 3.1.4.3, 3.1.4.4 and 3.1.5.1.

* Identifies valves that may have their stroke times rounded to the nearest tenth of a second, even if the obtained stroke time exceeds the surveillance stroke time (e.g., 1D23-F010A strokes in 2.04 seconds, 2.0 seconds may be recorded).

Enclosure B to Letter L-11-082

Perry Nuclear Power Plant Snubber Program

(40 pages follow)

SNUBBER AUGMENTED VISUAL INSERVICE INSPECTION/EXAMINATION AND FUNCTIONAL TESTING PROGRAM

Plant Administrative Procedure

Effective Date: 11-8-10

Preparer: Gerry Freddo / 9-1-10
Date

Approver: Scott Seman / 10-29-10
Date

TABLE OF CONTENTS

		Page
1.0	PURPOSE	3
2.0	SCOPE	3
3.0	DEFINITIONS	3
4.0	PROCEDURE DETAILS	6
4.1	Responsibilities	6
4.2	Compliance Requirements for ORM Applicable Snubbers	9
4.3	Functional Testing Requirements for ORM Applicable Snubbers	12
4.4	Visual Inspection/Examination Requirements for ORM Applicable Snubbers	17
4.5	Scheduling for ORM Applicable Snubbers	22
4.6	Administration for ORM Applicable Snubbers	24
5.0	RECORDS	27
6.0	REFERENCES	28
7.0	SCOPE OF REVISION	30

ATTACHMENTS

Attachment 1 -	Alternate Qualification Record	31
Attachment 2 -	OM Code Table 4252-1	33
Attachment 3 -	Requirements for Non-Safety/Non-Seismic Snubbers	34
Attachment 4 -	Failure Mode Groups (FMGs) & Additional Testing	39

1.0 PURPOSE

To establish administrative requirements for performance, scheduling, evaluation and follow-up action (e.g., corrective) of the snubber preservice and inservice inspection/examination, testing and service life monitoring surveillances.

2.0 SCOPE

This procedure applies to all safety-related and/or Seismic Category I snubbers on systems affecting safe operation or shutdown of the reactor, or to ensure the integrity of the reactor coolant pressure boundary. The visual inspection/examination of safety-related and/or Seismic Category I snubbers shall be in compliance with Operational Requirements Manual (ORM) TR 6.4.1.1.a, b, c, and d and ASME OM Code (2001 Edition with Addenda through 2003). The functional testing of safety-related and/or Seismic Category I snubbers shall be in compliance with ORM TR 6.4.1.1.e, f, g and h and ASME OM Code (2001 Edition with Addenda through 2003). The service life monitoring of snubbers shall be in compliance with ORM TR 6.4.1.1.i and OM Code, ISTD-6000 and procedure SVI-L51-T2011.

The visual inspection/examination and functional testing of non-safety/non-seismic snubbers shall be to the parameters as stated within this procedure. Reference Attachment 3 for a list of those snubbers.

3.0 DEFINITIONS

NOTE
The definitions of ISTA-2000 and ISTD-2000 shall apply, as applicable, in addition to the definitions below.

3.1 Accessible Snubbers - Those snubbers that can be inspected/examined during normal plant operating conditions.

3.2 Activation Acceleration (Mechanical) - Snubber distinct acceleration which is usually characterized by an abrupt increase in resistive force or reduction in velocity.

3.3 Activation Velocity (Hydraulic) - Snubber distinct velocity which is usually characterized by an abrupt increase in resistive force or reduction in velocity.

3.4 Authorized Nuclear Inservice Inspector (ANII) - An individual holding a commission from the National Board of Boiler and Pressure Vessel Inspectors, qualified in accordance with ANSI/ASME-626.1-1975. This individual is responsible for certifying results of activities carried out under the requirements of the ASME Boiler and Pressure Vessel Code, Section XI.

3.5 As Found - The condition of a snubber as it exists in the system prior to any preventive maintenance, corrective maintenance, or disassembly to perform testing.

3.6 Augmented Inservice Inspection Program - An inspection/examination program which meets additional requirements beyond those of the ASME OM Code, ISTD. Augmented requirements may be established by the Regulatory Authority or other agencies and do not require complete compliance with the ASME OM Code, ISTD.

3.7 Bleed Rate (Hydraulic) - See definition of release rate.

3.8 Breakaway Force (Mechanical) - The minimum applied force required to initiate extension or retraction of the snubber.

3.9 Component - Denotes an item in a Nuclear Power Plant such as a vessel, pump, valve, support, snubber, or piping system.

3.10 Design Test Plan Group (DTPG) - A population of snubbers selected for testing in accordance with the 10% or 37 testing sample plan.

3.11 Drag Force (Mechanical) - The force required to maintain the snubber movement at a constant velocity prior to actuation.

3.12 Equipment Dynamic Restraint - See definition of snubber.

3.13 Inspection - For the purposes of this program, Inspection denotes the performance of a visual observation in which the inspector shall be qualified by the owner or his agent in accordance with the comparable levels of competency as defined in ANSI N45.2.6-1978.

NOTE
When the visual observation is also being performed in accordance with ASME Section XI, Article IWF-2000 the term examination is used in place of inspection. (See 3.26)

3.14 Failure Mode Group (FMG) - A group of snubbers that have failed and those other snubbers that have similar potential for similar failure.

3.15 Functional Adequacy - A visual examination to confirm operability by the verification of the settings or freedom of motion.

3.16 Functional Testing - An in-place or bench test exercise of a snubber while measuring and observing all the required parameters.

3.17 Hydraulic Snubber - A device which provides restraint to a component or system during a sudden application of force in which load is transmitted through a hydraulic fluid. The device shall allow essentially free motion during thermal movement.

3.18 Inaccessible Snubbers - Snubbers within a high radiation area or under conditions that would render it impractical for examinations during reactor operation without endangering personnel.

3.19 Maintenance - Actions taken to prevent or correct deficiencies in the functional operation of a snubber.

3.20 Mechanical Snubber - A device which provides restraint to a component or system during a sudden application of force in which load is transmitted entirely through mechanical parts/items. The device shall allow essentially free motion during thermal movement.

3.21 Release Rate (Hydraulic) - The velocity of snubber movement under a load and/or after activation takes place.

3.22 Replacement Snubber - Snubbers that have a proven suitability for the application and environment which replace existing snubbers.

3.23 Service Life - The period of time from installation/acceptance that the snubber or individual snubber parts are expected to meet the operational readiness requirements without maintenance.

3.24 Structural Integrity - The capability of a given component or structure to perform the design function (e.g., pressure retaining boundary, support of structural weight, restriction of movement, etc.). Structural integrity is not related to operability of components being tested (e.g., pumps, valves, or snubbers).

3.25 Transient Event - An unexpected or potentially damaging occurrence which was determined from review of operating data or during a visual inspection/examination.

3.26 Visual Examination - Observing, monitoring, or measuring to determine conformance to Owner-specified requirements.

1. VT-3 Visual Examination Method - Examination to determine the general mechanical and structural conditions of components and their supports.

4.0 PROCEDURE DETAILS

4.1 Responsibilities

4.1.1 Director, Site Engineering, has overall responsibility for:

1. Implementation of the Perry Plant Unit 1 Snubber Testing Program.

2. Evaluating the snubber program's effectiveness.

4.1.2 Manager, Technical Services Engineering, has responsibility for:

1. Identifying the required safety-related snubber and/or Seismic Category I testing and inspections/examinations. Identifying the required non-safety/non-seismic snubber testing and inspections/examinations.

2. Verifying procedures and instructions are revised to comply with Operational Requirements Manual (ORM), ASME OM Code, Regulatory Guides, 10CFR50.55a(g), and other industry practices.

4.1.3 Supervisor, Nuclear Engineering Programs, has responsibility for:

1. Approving the snubber testing and inspection/examination sample method employed and transmitting the functional testing sampling method to Licensing and Compliance Section for submittal to the NRC.

2. Maintaining a status of the current snubber testing sample and snubber inspection/examination frequency.

3. Implementing preparation and approval of instructions for testing and inspection/examination for compliance to Operational Requirements Manual and ASME OM Code, ISTD Inservice Test Requirements.

4. Providing Environmental Qualification (EQ) Program resources in support of snubber Service Life determinations.

4.1.4 Site Engineering Program Owner (SEPO)-Snubbers, has responsibility for:

1. Identifying snubbers subject to surveillance and instructions for performance of the required testing and inspections/examinations. Coordinating all snubber activities with the Surveillance Coordinator, Work Control Section, Perry Maintenance.

2. Changing the inspection/examination frequency requirements upon identification of an unacceptable (i.e., inoperable) condition and the testing sample upon exceeding testing acceptance criteria.

3. Entering testing, inspection/examination, repair, and replacement data into the applicable plant computer system (e.g. SnubbWorks).

4. Implementing performance of snubber inspection/examination and functional testing.

5. Reviewing industry Operating Experience (OE) for applicability to PNPP snubber population and the PNPP snubber program.

6. Evaluating all captured Snubber program data (i.e. testing, inspection/examination, repair and replacement data) for trending. Snubber SEPO shall report those evaluation results per the communication requirements specified in NOBP-CC-1006, FENOC Conduct of Engineering and make changes to the Snubber Program commensurate with identified trends (e.g. increased examination frequency, adjustments to Service Life Monitoring program, etc.).

7. Maintaining the Snubber Program configuration management including the recognition and communication of controlled program information to other site organizations. Communication shall be per NOBP-CC-1006, FENOC Conduct of Engineering.

4.1.5 Director, Site Maintenance, has responsibility for:

1. Implementing performance of snubber removal, repair, internal parts examination, replacement, and installation.

4.1.6 Manager, Design Engineering Section, has the responsibility for:

1. Determining snubber functional testing acceptance criteria.

2. Dispositioning Condition Reports pertaining to snubber visual examination or functional testing failures.

3. Conducting root cause failure analysis.

4. Maintaining the list of snubbers required for containment integrity (reference Eng. Calc. EA-113).

5. Defining the scope of all safety related and/or Seismic Category I snubber MPL's and all non-safety/non-seismic snubber MPL's.

6. Establishing acceptance guidelines for snubber inspection/ examination and direct efforts to evaluate, repair or replace snubber/snubber parts declared inoperable.

7. Transmitting revised snubber settings (design cold set tolerances and snubber movements) to Snubber SEPO in accordance with Engineering Design Guide (EDG) 97-015.

4.1.7 Manager, Site Work Management:

1. Has the responsibility for scheduling the identified snubber tests and inspections/examinations.

4.2 Compliance Requirements for ORM Applicable Snubbers

4.2.1 Snubbers

The snubbers included in this section of the program were selected in accordance with their safety significance. Factors considered in snubber categorizations were accessibility, manufacturer, design characteristics, operating environment, design application, and size. Factors considered when establishing snubber types were manufacturer and design characteristics (i.e., hydraulic or mechanical).

4.2.2 Procedure

This procedure and all supporting instructions have been written to comply with specific requirements of the ASME OM Code, Subsection ISTD for functional testing and visual inspection/examination.

1. Functional Testing Requirements:

   Testing implements the requirements of ORM TR 6.4.1.1.e, f, g and h and ISTD-5000.

   a. Sampling and additional testing criteria shall be in accordance with ORM TR 6.4.1.1.e functional tests, ISTD-5260, ISTD-5270 and ISTD-5280.

2. Visual Inspection/Examination Requirements:

   Visual inspection/examination implements the requirements of ORM TR 6.4.1.1.a, b, c, d and h. and ISTD-4000.

3. Service Life Monitoring Requirements:

   Service Life Monitoring instruction SVI-L51-T2011 implements the requirements of ORM TR 6.4.1.1.i and ISTD-6000.

   a. Service Life Monitoring is initially established by the Environmental Qualification Program requirements and shall be extended or shortened based on monitoring test results and failure history.

   b. Snubber service life is based upon manufacturer recommendations and evaluated performance.

   c. Each refuel cycle, the Snubber SEPO will evaluate the performance of the snubber population and based upon the results of that evaluation, may assign certain snubbers to be tested for service life monitoring purposes. The results of such testing do not require testing of additional snubbers; however, the results of such testing will be evaluated.

NOTE

PNPP has established an extended range of operability for snubbers. When snubber test results fall within this extended range, they are categorized as degraded and replaced with pretested spare snubbers from inventory. Performance of all snubbers included in this program is evaluated by the Snubber SEPO each refuel cycle. This ensures that snubbers that begin to show degradation prior to the established service life will be replaced and the service life for that location will be evaluated.

4. Personnel Qualification Requirements:

   a. Personnel performing visual examinations shall be qualified/certified as either a VT Level II (unlimited) or a VT Level II-Limited to VT-3 in accordance with NOP-CC-5708. Prior to performing examination activities in support of PNPP, vendor personnel qualifications/ certifications shall be processed in accordance with NOP-CC-5709.

b. As an alternative to the above, personnel who perform non-ASME Section XI visual inspections of snubbers only (i.e., ORM required visual inspection only), may be qualified as a Snubber Inspector in accordance with the requirements listed in Attachment 1.

c. Snubber Functional Testing, Rebuild/Overhaul and Failure Analysis: Vendors providing these services at PNPP must submit personnel certification records to the Snubber SEPO for review and approval at least 45 days prior to scheduled work start. Certification records shall include: Name of certified individual, Level of certification and test method, Educational background and experience, Statements indicating satisfactory completion of training, Results of the physical examinations and eye tests, Evidence of successful completion of examinations (i.e. qualification records with examination results), signed by a Level III Examiner, Other suitable evidence of satisfactory qualifications, when such qualifications are used in lieu of examinations, Dates of certification and/or recertification, Signature of employers designated representative (e.g. Level III Examiner) and Individual's resume.

For any work performed by vendor outside of PNPP program procedure scope, vendor shall have in place, and available for review by the Snubber SEPO, a Quality Assurance program which meets 10CFR50, Appendix B, of the ASME Code, and applicable industry standards/regulatory guides/codes for personnel certifications associated with intended work scope.

d. Snubber SEPO, Primary and Backup Qualification shall be as specified in NOP-SS-2101, Engineering Program Management.

e. Personnel performing snubber rebuild, overhaul and failure analysis activities shall have successfully completed formal training related to the activity to be performed for the specific snubber model/type being rebuilt, overhauled or analyzed. In addition, personnel shall have a documented history of performing said activities with an amount of experience commensurate with the complexity of the activity to be performed. Documentation related to both training and experience shall be made available to the Snubber SEPO for review prior to commencement of any related activities.

5. Storage Requirements:

Replacement seal kits for hydraulic snubbers are to be stored in level "B" storage facility per ANSI N45.2.2. Assembled hydraulic snubbers are to be stored per NOBP-CC-7006, Storage Maintenance Requirements, SMR-009 (E-Systems Snubbers) and SMR-012 (Hydraulic-Lisega-Snubbers).

4.3 Functional Testing Requirements for ORM Applicable Snubbers

4.3.1 Test requirements shall be measured and parameters observed to verify operability of either hydraulic or mechanical snubbers. Test methods of ISTD-5200 shall be used. The acceptance criteria for each parameter shall be established by DES in accordance with ISS-2600. Guidelines noted in OM Code, ISTD Non Mandatory Appendix H are considered.

4.3.2 Parameters Measured or Observed for Mechanical Snubbers

1. Breakaway/Running Drag Force - compliance to ORM TR 6.4.1.1.f.3.

2. Activation Acceleration - compliance to ORM TR 6.4.1.1.f.1.

4.3.3 Parameters Measured or Observed for Hydraulic Snubbers

1. Activation Velocity - compliance to ORM TR 6.4.1.1.f.1.

2. Bleed/Release Rate - compliance to ORM TR 6.4.1.1.f.2.

4.3.4 Evaluation

Snubber test data that exceeds the acceptable level acceptance criteria established in the Surveillance Instruction shall require an Engineering evaluation by submitting a Condition Report (CR). [Exception: PSA mechanical snubbers whose Drag Values are found in the expanded (degraded) range do not require a condition report. Reference ISS-2600 (SEN 515) and Engineering Calculation EA-0101.]

NOTE

Pre-service and inservice testing is intended to verify operational readiness. When testing is conducted at ambient temperature, as was the original factory test, no correction factors are required.

Design Engineering shall evaluate/disposition the deviation with three possible disposition conditions as follows:

1. ACCEPTABLE - reinstall existing snubber.

2. DEGRADED - replace existing snubber with a new or rebuilt snubber, no additional testing sample is required.

3. FUNCTIONAL FAILURE - replace existing snubber with a new or rebuilt snubber - additional testing sample is required per ORM TR 6.4.1.1.e - additional evaluation will be required per ORM TR 6.4.1.1.g. The results of this evaluation shall be used, if applicable, in selecting snubbers to be tested in an effort to determine the operability of other snubbers irrespective of type which may be subject to the same failure mode.

4. Evaluations shall contain as a minimum;

   a. General Description

      1) System and component affected

      2) Location

b. Nature of Problem

1) How the problem was found

2) Description of problem

3) Probable cause(s) of the existing condition (e.g., manufacturer or design deficiency)

c. Safety Concern

1) Consequences on the component and/or system.

NOTE
The purpose of this evaluation shall be to determine if the attached component was adversely affected by the problem.

d. Service Life

1) Snubber or individual snubber part repetitive failures.

(INTENTIONALLY BLANK)

NOTE

Repetitive failures or evidence of degradation require the evaluation to determine if the snubber or individual snubber parts service life should be revised. Snubber SEPO shall also consider the need for testing for SLM purposes as a result of this evaluation.

4.3.5 Disposition

Functional test failures or degraded snubbers shall be repaired or replaced with the repaired or replaced snubbers being retested prior to installation.

If the snubber performs below the functional capability or performance level, a Limiting Condition for Operation exists and the applicability/action statements within ORM 6.4.1 must be followed.

1. Retest Requirements:

   a. Snubbers placed in the location of a failed snubber shall be tested during the next functional test (i.e., next refueling).

      1) The snubber shall not be included in the sample plan.

      2) The snubber's failure shall not be the sole cause for increasing the sample size for the sample plan.

      3) Snubbers having been repaired shall be tested before installation if the repair could affect the functional test results.

      4) Replacement snubbers shall be tested before installation.

         a) Mechanical snubbers shall have met the acceptance criteria subsequent to their most recent service and the freedom-of-motion test must have been performed within 12 months before being installed.

2. Additional Testing Requirements:

Upon snubber testing failure, additional testing shall be established in accordance with the sample plan used (i.e., sample plan provided to the NRC).

a. 10% Plan - At least 10% of the total of each Design Test Plan Group to be tested.

1) Each failure requires an additional 5% from the same Design Test Plan Group or Failure Mode Group to be tested until no further failures occur or all snubbers of that Design Test Plan Group or Failure Mode Group have been functionally tested and the requirements of ISTD-5330 and 5331 are met.

b. 37 Plan - A random sample of 37 snubbers from each Design Test Plan Group to be tested in accordance with Figure ISTD-5431-1.

1) For each snubber type that fails, another sample of at least one half the size of the initial sample shall be tested per ISTD-5400 requirements. When sample plan test results fall on or below the "Accept" line, testing of that type of snubber may be terminated.

a) Accept line follows evaluation $N = 36.49 + 18.18C$ where N = number of snubbers of that type tested and C = number of failed snubbers.

2) Terminate testing if all the snubbers of that type have been tested.

If any snubber selected for functional testing either fails to lock up or fails to move; i.e., frozen-in-place; the root cause will be evaluated by Engineering and, if caused by manufacturer or design deficiency, all snubbers of the same type subject to the same defect shall be functionally tested. This testing requirement shall be independent of the requirements stated in ORM TR 6.4.1.1.e for snubbers not meeting the functional test acceptance criteria.

4.4 Visual Inspection/Examination Requirements for ORM Applicable Snubbers

4.4.1 Acceptance Standards

NOTES

- The snubber settings contained in the SnubbWorks database are specified in decimal form, consistent with design calculation data format and as-received by the Snubber SEPO from DES (ref. EDG-97-015), while design drawings may provide the same data in fractions of an inch. Either the design calculation data (decimal) or the design drawing data (fractions) can be used when performing snubber inspections/ examinations and the existence of both does not constitute an unevaluated condition (ref. CR 06-7968).

- The Snubber Visual/VT-3 Examination form (PNPP No. 6985) is a dual purpose form that can be used for snubber surveillance program visual inspections, VT-3 examinations, or both. The Acceptance Standards provided here are specific to the snubber surveillance program requirements as detailed in surveillance instruction SVI-L51-T2000. The Acceptance Standards for snubber VT-3 Visual Examinations performed per ASME Boiler and Pressure Vessel Code Section XI requirements and/or as dictated by the Inservice Examination Plan (ISEP), include larger "examination boundaries" and are governed by the ISEP and NOP-CC-5708.

- Examination boundary for the snubber surveillance program shall include the snubber assembly from pin to pin inclusive.

Acceptance criteria, established by Design Engineering to meet the requirements of ORM TR 6.4.1.1.c, includes verification that indications recorded during the visual inspection/examination (hydraulic fluid level, hot/cold setting, etc.) are categorized as inoperable (unsat./rejectable), operable relevant (sat./acceptable), or operable nonrelevant (sat./acceptable). Categorization details are as follows:

1. Inoperable (rejectable) conditions.

NOTE

An inoperable indication may require entering into a Limiting Condition of Operation (LCO) and shall require a disposition.

a. Hydraulic Fluid Level:

1) E-System (all sizes) indicator rod at empty or below.

2) Lisega (all sizes) leading edge or any part of the gold color brass alloy of the reservoir piston appears in the sight glass.

b. Hot/Cold Setting - recorded hot or cold setting indicates the snubber to be topped or bottomed out and/or the calculated thermal growth would cause snubber to top or bottom out.

c. Indications - missing, detached, or loosened snubber or snubber attachment devices (within the augmented examination boundary). Arc strikes, weld spatter, roughness, general corrosion, paint, or scoring on close tolerance machined or sliding surfaces. Deformed or structurally degraded snubber or snubber attachment devices.

2. Operable relevant (acceptable) conditions.

NOTE

An operable relevant indication shall require a disposition.

a. Hydraulic Fluid Level:

1) E-System (all sizes) indicator rod at less than seventy percent (70%) and greater than zero percent (0%) of full or reservoir capacity.

2) Lisega (all sizes) not applicable.

b. Hot/Cold Setting - Not applicable.

c. Indications - detached, loosened, or missing locking devices. Damaged or bound spherical bearings. Thread engagement less than flush. Incorrect or missing identification tags. Tape (or tape residue) on the PSA Mechanical Snubber between the inner and outer tube for PSA 1/4, 1/2, or on the Support Cylinder for all other sizes.

d. Excessive gap - between the snubber paddle (spherical bearing) and the pipe attachment or structural attachment greater than one washer thickness that could not be temporarily corrected by use of clips (ISS-2600).

3. Operable nonrelevant (acceptable).

NOTE
An operable nonrelevant indication requires no disposition.

a. Hydraulic Fluid Level:

1) E-Systems (all sizes) - Not applicable.

2) Lisega (all sizes) is the appearance of the silver color of the stainless steel cylinder tube completely across the sight glass.

b. Hot/Cold Setting - Not applicable.

c. Indications - weld spatter, scratches, or surface abrasion marks on other than close tolerance machined or sliding surfaces. Fabrication marks. Roughness or general corrosion showing no visible evidence of snubber or snubber attachment device weakening. Chipped or discolored paint resulting from other than actual snubber degradation. Tape (or tape residue) on the snubber which does not interfere with the intended snubber operation.

d. Existing gap - between the snubber paddle (spherical bearing)and the pipe attachment or structural attachment of one washer thickness or less that were temporarily corrected by use of clips (ISS-2600).

4.4.2 Evaluation

Snubber inspection/examination indications which exceed the acceptance criteria established in the Surveillance Instruction shall require an Engineering evaluation by submitting a Condition Report (CR) to Design Engineering. When performing evaluations on inspection/examination indications, the following items shall be addressed:

1. General Description:
   a. System and component affected
   b. Location
2. Nature of Problem:
   a. How problem was identified
   b. Description of problem
   c. Probable cause(s) of the existing condition
3. Safety Concerns:
   a. Importance to plant and/or system operation
   b. Probability and consequence of snubber failure

4.4.3 Disposition

Visual inspection/examination indications categorized as inoperable or operable relevant shall be addressed to determine a final resolution. Final resolution may require repair, replacement, evaluation, or testing.

If the snubber indicates that its performance would be below the functional capability or performance level, a Limiting Condition for Operation may exist and the action statements within ORM 6.4.1 must be followed.

1. Re-inspection/Re-examination:
   a. Snubber installed after repair, replacement, or testing shall be re-inspected/re-examined.

2. Additional Visual Inspection/Examination:

   a. All snubbers attached to sections of systems that have experienced unexpected or potentially damaging transients shall be inspected/examined.

      1) Accessible systems shall be inspected/examined within 72 hours.

      2) Inaccessible systems shall be inspected/examined within 6 months.

      3) Snubbers shall be verified to have freedom-of-motion by one of the following:

         a) Manually induced

         b) In-place snubber piston setting

         c) Stroking through full range of travel

3. Functional Testing:

   Snubbers that fail a visual examination may be functionally tested to determine operability of the snubber. This functional test data may be used to reclassify the snubber as "Operable Non-Relevant" or "Operable Relevant." Such testing shall be in accordance with ISTD-4233 and 4240.

4.5 Scheduling for ORM Applicable Snubbers

4.5.1 Frequency

1. Visual Inspection/Examination:

   a. A visual inspection of all snubbers shall be performed according to the schedule determined by ISTD Table 4252-1 (Attachment 2). Snubbers are categorized as inaccessible or accessible during reactor operation. Each of these categories inaccessible or accessible may be inspected independently. The visual inspection for each type of snubber shall be determined based on the criteria provided in ISTD Table 4252-1 and the initial inspection interval utilizing this criteria shall be 18-months, beginning from the conclusion of the last visual inspection conducted during RFO4.

   b. Surveillance and general maintenance instructions shall implement an (As-Found) visual inspection/examination prior to (defined as within the previous six months) and after (As-Left) performance of repairs, replacement, testing or any other evolution which involves the unpinning of at least one end of a snubber.

   c. Increased or decreased visual inspection frequency shall conform to ISTD Table 4252-1.

   d. PNPP may also implement the extended visual examination interval allowed by ASME Code Case OMN-13. This Code Case allows the extension of the visual examination interval beyond the maximum of 48 months allowed by ISTD Table 4252-1, provided certain prerequisites are satisfied. This Code Case has been approved for use by the NRC in Regulatory Guide 1.192. Adjustments to the extended interval of this Code Case shall be in accordance with SVI-L51-T2000, paragraph 5.1.4.

2. Functional Testing:

   a. During the first refueling outage and at least once per refueling interval thereafter. The test interval is based upon a fuel cycle. The test interval may start sixty (60) days prior to a scheduled refueling outage and shall be completed prior to the end of the scheduled refueling outage.

   b. Retests and additional testing requirements shall conform to Section 4.3.5 of this procedure.

4.5.2 Sample Plan

1. Visual Inspection/Examination:

   a. Snubbers shall be visually inspected during each inspection interval as determined in ORM 6.4.1.1.

2. Functional Testing:

   One of the following methods shall be used to select a representative sample of snubbers from each Design Test Plan Group for functional testing.

NOTE
Snubbers that do not meet testing requirements shall be evaluated and additional testing shall be determined in accordance with ISTD-5200. Failure Mode Groups (FMG's) shall be established if applicable based upon failure evaluation results. FMG guidance can be found in Attachment 4.

   a. 10% Plan - At least 10% of the total of each snubber Design Test Plan Group and ISTD-5300.

   b. 37 Plan - An initial random sample of 37 snubbers for each Design Test Plan Group in accordance with ISTD-5400.

   c. Any change in the sample plan selection methodology from originally submitted to the NRC shall require formal communication with the Nuclear Regulatory Commission.

4.6 Administration for ORM Applicable Snubbers

4.6.1 Sample Plan Development/Routing

1. Snubber functional testing sample plan.

   a. The Snubber SEPO shall:

      1) Generate an appropriate sample plan for each snubber type as identified in Section 4.5.2.2.

      2) Generate any additional (augmented) test plans, as appropriate.

      3) Review and submit initial sample plans and/or additional sample selection for approval to the Supervisor, Test & Performance.

   b. The Supervisor, Nuclear Engineering Programs, or designee, shall:

      1) Approve the sample plans generated.

      2) Forward approved sample plans to the appropriate organizations.

2. Snubber visual inspection/examination sample plan.

   a. The Snubber SEPO shall:

      1) For each required interval population/category of snubbers generate a sample plan using a representative selection of snubbers in each category/type.

      2) Forward sample plan(s) to the appropriate organizations.

      3) Following the refueling outage adjust the snubber inspection/examination frequency (by failure rate, in accordance with Table ISTD 4252-1) and notify Surveillance Coordinator.

4.6.2 Computer Update

1. The Snubber SEPO shall update the plant site applicable computer software (e.g. SnubbWorks) by reviewing the surveillance data sheets listed below.

   a. Snubber functional testing SVI-L51-T2010

      1) Functional Test Data Sheet(s), PNPP No. 7117 and/or PSA Snubber Validator Test Data Sheet, PNPP No. 7640, or computer equivalent forms, as applicable.

   b. Snubber visual inspection/examination SVI-L51-T2000

      1) Snubber Visual/VT-3 Examination, PNPP No. 6985, or computer equivalent forms, as applicable.

   c. Snubber Service Life Monitoring SVI-L51-T2011

      1) Snubber Service Life is implemented and scheduled by NOP-WM-3001.

4.6.3 Snubber Location Data

SVI-L51-T2011, Snubber Service Life Monitoring, contains a listing of all snubbers included in the Perry Unit 1 Snubber Augmented Inservice Visual Inspection/Examination and Functional Testing Program.

Snubber location data, shown under the table heading "Location Data" on that listing (SVI-L51-T2011 Attachments 1, 2, and 3), supports ongoing snubber service life monitoring by providing a unique set of location-specific data for each installed snubber included in the Perry Unit 1 Snubber Augmented Inservice Visual Inspection/Examination and Functional Testing Program.

NOTE

Unique snubber Functional Location Numbers provide additional location-specific information, specifically; The Unit, System, and Snubber (Hanger) Number assigned for each in-plant / installed snubber location.

The information provided by the 6 digit alpha-numeric Location Data field is as follows;

First Digit - (H) Hydraulic (M) Mechanical (L) Lisega.

Second Digit - (1) Accessible (2) Inaccessible

Third Digit for PSA Mechanical Snubbers - (1) PSA 1/4 (2) PSA ½ (3) PSA 1 (4) PSA 3 (5) PSA 10 (6) PSA 35 (7) PSA 100

Third Digit for (E-Systems) Hydraulic Snubbers (1) 20 Kip (2) 30 Kip (3) 50 Kip (4) 70 Kip (5) 100 Kip

Third Digit for Lisega Hydraulic Snubbers (1) 3018 (2) 3038 (3) 3042 (4) 3052 (5) 3062 (6) 3072 (7) 3082 (8) 3092

Fourth Digit -- (1) Inservice System (2) Functional System

Fifth Digit -- Operating Temperature (1) Less than 200°F (2) 200°F and Greater

Sixth Digit -- Vibration Displacement (1) Less than 20 Mils (2) 20 Mils and Greater.

4.6.4 Snubbers Required for Containment Integrity

The listing of snubbers required for Containment Vessel Integrity can be found in PDB-B0007. Requirements for the removal of snubbers required for Containment Integrity can be found in OAI-0201.

NOTES

- Additions or deletions of snubbers due to design changes have no impact on the context of the PDB. Snubbers listed in PDB-B0005, PDB-B0006, and PDB-B0007 will be updated to reflect those types of changes on a periodic basis.
- Snubbers deleted for design changes shall nevertheless be considered in their respective examination population, examination category, or Failure Mode Group (FMG) for determining the corrective action.

4.6.5 Snubbers With Special Requirements

Snubbers attached to the Reactor Recirculation System have special requirements for removal activities, refer to OAI-0201.

4.6.6 Snubber Removal Cautions

1. **CAUTION** shall be exercised when removing a snubber from an Operable system when that system is required to be operable, refer to OAI-0201.

5.0 RECORDS

5.1 Records Handling

Records completed/generated by this document shall be handled in accordance with the established records management program.

5.2 Records Capture

The following records are completed/generated by this document:

Quality Records

Visual Inspection/Examination Sample Plans

Functional Testing Sample Plans

Quality Records (Cont.)

Functional Test Data Sheet (PNPP No. 7117)

PSA Snubber Validator Test Data Sheet (PNPP No. 7640)

Snubber Visual/VT-3 Examination (PNPP No. 6985)

Alternate Qualification Record

Non-Quality Records

None

6.0 REFERENCES

6.1 Discretionary

American National Standards Institute (ANSI)/ASME-626.1-1975

American National Standards Institute (ANSI) N45.2.6-1978

American Society for Nondestructive Testing Recommended Practice No. SNT-TC-1A, 1984 Edition

Engineering Calculation EQ-141, Qualification Life of Lisega Snubbers at PNPP

Engineering Calculation EQ-166, Service Life of E-System Snubbers within the Drywell

Engineering Calculation EQ-176, Service Life of E-System Snubbers in areas other than the Drywell

Engineering Calculation EA-0101, Evaluation of piping for pipe support 1E12H0460 topped out snubbers

Engineering Calculation EA-0113, Snubbers required for Containment Structural Integrity

ISS-2600, Fabrication and Installation of Pipe Supports

NOP-CC-5708, Written Practice for the Qualification and Certification of Nondestructive Examination Personnel

NOP-CC-5709, Review and Approval of Contracted Nondestructive Examination Activities

NOP-ER-3203, Snubber Program

NOP-WM-3001, Work Management PM Process

OAI-0201, Operating General Instructions and Operating Practices

PDB-B0005, Snubber MPL to Analytical Drawing Cross Reference

PDB-B0006, Analytical Drawing to Snubber MPL Cross Reference

PDB-B0007, Containment Integrity Penetration to Snubber MPL Cross Reference

PDB-R0001, Operational Requirements Manual (ORM)

SVI-L51-T2010, Augmented Snubber Functional Testing of Safety Related Snubbers

SVI-L51-T2000, Augmented Visual Inservice Inspection/Examination of Safety - Related Snubbers

SVI-L51-T2011, Snubber Service Life Monitoring

Technical Assignment File (TAF) 81542, Snubber Service Life Monitoring Program

Technical Assignment File (TAF) 81655, SP-2600 to allow the use of Lisega Snubber Data

6.2 Obligations

American Society of Mechanical Engineers (ASME) OM Code, 2001 Edition with Addenda through 2003

American Society of Mechanical Engineers (ASME) Section XI, 2001 Edition with Addenda through 2003

ISEP, Inservice Examination Program

NRC Regulatory Guide 1.192

PNPP Snubber Test Plan

PNPP Technical Specifications

PNPP Updated Safety Analysis Report (USAR)

Title 10 of the Code of Federal Regulations (CFR) 50.55a(b): Codes and Standards, Reference Applicability

Title 10 of the Code of Federal Regulations (CFR) 50.55a(g): Inservice Inspection Requirements

Commitments addressed in this document:

F00871

7.0 SCOPE OF REVISION

Rev. 15

1. Added ISTD-6000 reference to paragraph 4.2.2.3, Service Life Monitoring Requirements.
2. Retitled and revised Section 4.6.3, Snubber Location Data, to reflect transfer of related data from ISEP to SVI-L51-T2011 and to better align this procedure with that SVI.
3. Added reference to NOP-ER-3203, Snubber Program.

ATTACHMENT 1: ALTERNATE QUALIFICATION RECORD
Page 1 of 2

_____, of _____ is qualified in accordance with the guidelines of ANSI N45.2.6 to a competency of Level II for the sole purpose of performing snubber visual inspections and review of non-ASME Section XI, Snubber Visual Inspection/Examination Reports per PAP-1115, "Snubber Augmented Visual Inservice Inspection/Examination and Functional Testing Program". This qualification is valid for three (3) years from the date of approval and is based on the following education and experience:

EDUCATION

_____	_____	
High School	Graduated (Year)	
_____	_____	_____
College	Graduated (Year)	Degree
_____	_____	
Other	Completion (Year)	

TRAINING

ISEP:	_____	___/___/___
PAP-1115:	_____	___/___/___
SVI-L51-T2000:	_____	___/___/___
SP-2600:	_____	___/___/___
ORM 6.4.1:	_____	___/___/___
	Signature	Date

ATTACHMENT 1: ALTERNATE QUALIFICATION RECORD
Page 2 of 2

PRACTICAL

Demonstrate the ability to perform required snubber inspections on all types of snubbers (i.e., any one PSA 1/4 to PSA 10, any one PSA 35 or 100, any one E-Systems Hydraulic, and any one Lisega Hydraulic snubber):

_____ ____/____/____
Witnessed By Date

EXPERIENCE

Six months experience in Fabrication, Installation, Testing, Visual Inspection, or VT-1,2,3 Examination of Component Support assemblies.

Dates	Employer	Job Description
Dates	Employer	Job Description
Dates	Employer	Job Description

OTHER: Documented satisfactory completion of a near distance visual acuity exam and a color vision test.

Applicants Signature: _____ _____
Date

Approved by: _____ _____
Manager Technical Services Engineering Date

ATTACHMENT 2: OM CODE TABLE 4252-1

Page 1 of 1

TABLE ISTD-4252-1 VISUAL EXAMINATION TABLE			
	Number of Unacceptable Snubbers		
Population or Category [Note (1)]	Column A for Extended Interval [Notes (2), (3)]	Column B for Interval Same as Previous [Notes (2), (4), (5)]	Column C for Interval Reduction to β [Notes (2), (5), (6)]
1	0	0	1
80	0	0	2
100	0	1	4
150	0	3	8
200	2	5	13
300	5	12	25
400	8	18	36
500	12	24	48
750	20	40	78
≥ 1000	29	56	109

NOTES: (1) Interpolation between population or category sizes and the number of unacceptable snubbers is permissible. The next lower integer shall be used when interpolation results in a fraction.

(2) The basic interval shall be the normal fuel cycle up to 24 months. The examination interval may be as great as twice, the same, or as small as fractions of the previous interval as required by the following Notes. The examination interval may vary ±25% of the current interval.

(3) If the number of unacceptable snubbers is equal to or less than the number in Column A, then the next examination interval may be increased to twice the previous examination interval, not to exceed 48 months. In that case, the next examination according to the previous interval may be skipped.

(4) If the number of unacceptable snubbers exceeds the number in Column A, but is equal to or less than the number in Column B, then the next visual examination shall be conducted at the same interval as the previous interval.

(5) If the number of unacceptable snubbers exceeds the number in Column B, but is equal to or less than the number in Column C, then the next examination interval shall be decreased to two-thirds of the previous examination interval or, in accordance with the interpolation between Columns B and C, in proportion to the exact number of unacceptable snubbers.

(6) If the number of unacceptable snubbers exceeds the number in Column C, then the next examination interval shall be decreased to two-thirds of the previous interval.

ATTACHMENT 3: REQUIREMENTS FOR NON-SAFETY/NON-SEISMIC SNUBBERS
Page 1 of 5

Non-Safety/Non-Seismic snubbers identified in Table 1 shall be functionally tested and visually inspected in accordance with this Attachment.

1. **Functional Testing of Non-Safety/Non-Seismic Snubbers**

   a. All non-safety/non-seismic snubbers shall be functionally tested over an approximate 10-12 year schedule beginning with RFO4. These snubbers shall be scheduled during Refueling Outages over this period to ensure that each is tested at least once.

   b. Functional testing parameters shall be the same as for the Safety-Related/Seismic Category 1 snubbers and tested in accordance with SVI-L51-T2010. Snubber test data that exceeds the acceptable level acceptance criteria established in the surveillance instruction shall require Engineering evaluation by submitting a Condition Report (CR), as determined by Technical Services Engineering to Design Engineering. [Exception: PSA mechanical snubbers whose Drag Values are found in the expanded (degraded) range do not require a condition report. Reference SP-2600, SEN 515 and Engineering Calculation EA-0101.]

      Design Engineering shall evaluate the deviation in accordance with Section 4.3.4.

   c. Functional test failures or degraded snubbers shall be repaired or replaced with repaired or replaced snubbers being retested prior to installation.

      1) Mechanical snubbers shall have met the acceptance criteria subsequent to their most recent service and freedom-of-motion test must have been performed within 12 months before being installed.

   d. Additional testing upon snubber testing failure shall be determined by DES based upon the failure mode and extent of condition.

ATTACHMENT 3: REQUIREMENTS FOR NON-SAFETY/NON-SEISMIC SNUBBERS
Page 2 of 5

2. **Visual Inspection of Non-Safety/Non-Seismic Snubbers**

   a. All non-safety/non-seismic snubbers shall be visually inspected at the discretion of the Snubber SEPO, however, generally on the same frequency as the Safety-Related/Seismic Category 1 snubbers.

   b. Visual inspection parameters shall be the same as for the Safety-Related/Seismic Category 1 snubbers and inspected in accordance with SVI-L51-T2000 with the exception that incorrect or missing identification tags shall be an "Operable Non-Relevant (acceptable)" concern. Snubber inspection results which exceed the acceptance criteria established in the surveillance instruction shall require Engineering evaluation by submitting a Condition Report (CR) as determined by Technical Services Engineering to Design Engineering.

   Design Engineering shall evaluate the deviation in accordance with Section 4.3.4.

   c. Personnel performing visual inspections shall be qualified in accordance with Section 4.2.2.4.

   d. Visual inspections which reveal "Inoperable (Rejectable)" conditions may be functionally tested to determine operability of the snubber. This functional test data may be used to reclassify the snubber as "Operable Relevant (acceptable)" or "Operable Non-Relevant (acceptable)".

   e. Additional visual inspections or increased frequency of inspections upon a visual failure shall be determined by Design Engineering based upon the failure mode and extent of condition.

3. **Administration for Non-Safety/Non-Seismic Snubbers**

   The Snubber SEPO is responsible for maintaining the status of visual inspection and testing of non-safety/non-seismic snubbers. Table 1 contains the listing of all Non-Safety/Non-Seismic snubbers. This listing will periodically be updated and not required to be changed upon DCP implementations.

ATTACHMENT 3: REQUIREMENTS FOR NON-SAFETY/NON-SEISMIC SNUBBERS
Page 3 of 5

TABLE 1 - Non-Safety/Non-Seismic Snubber Listing

Sorted by Support MPL/Asset Number

SUPPORT MPL/ASSET NUMBER	ANALYSIS NUMBER
1C85H6000	1N11-1G01A
1C85H6001	1N11-1G01A
1C85H6002	1N11-1G01
1C85H6003	1N11-1G01
1G50H0017 (abandoned in place)	1G50-0G57
1N11H0209	1N11G01
1N11H0210	1N11G01
1N11H0211	1N11G01
1N11H0212	1N11G01
1N11H0213	1N11G01
1N11H0214	1N11G01
1N11H0215	1N11G01
1N11H0216	1N11G01
1N11H0217	1N11G01
1N11H0218	1N11G01
1N11H0219	1N11G01
1N11H0220	1N11G01
1N11H0275	1N11G01
1N11H0276	1N11G01
1N11H0277	1N11G01
1N11H0326 (Tandem)	1N11G04
1N11H0327 (Tandem)	1N11G04
1N11H0332 (Tandem)	1N11G03
1N11H0333 (Tandem)	1N11G03
1N11H0338 (Tandem)	1N11G02
1N11H0339 (Tandem)	1N11G02
1N11H0343 (Tandem)	1N11G35
1N11H0344 (Tandem)	1N11G35

ATTACHMENT 3: REQUIREMENTS FOR NON-SAFETY/NON-SEISMIC SNUBBERS
Page 4 of 5

TABLE 1 - Non-Safety/Non-Seismic Snubber Listing

Sorted by Support MPL/Asset Number

SUPPORT MPL/ASSET NUMBER	ANALYSIS NUMBER
1N11H0349 (Tandem)	1N11G34
1N11H0350 (Tandem)	1N11G34
1N11H0355 (Tandem)	1N11G33
1N11H0356 (Tandem)	1N11G33
1N25H0025	1N25G19
1N25H0026	1N25G19
1N25H0027	1N25G19
1N26H0054	1N26G05
1N26H0055 (Tandem)	1N26G05
1N26H0056	1N26G05
1N26H0057	1N26G05
1N26H0058	1N26G05
1N26H0059	1N26G05
1N26H0060	1N26G05
1N26H0061	1N26G05
1N27H0270 (Tandem)	1N27G04
1N27H0271	1N27G04
1N27H0272	1N27G04
1N27H0273	1N27G04
1N27H0274	1N27G04
1N27H0275	1N27G04
1N27H0276	1N27G04
1N27H0277	1N27G03
1N27H0278	1N27G03
1N27H0279	1N27G03
1N27H0280	1N27G03
1N27H0281	1N27G03
1N33H0143	1N33G01

ATTACHMENT 3: REQUIREMENTS FOR NON-SAFETY/NON-SEISMIC SNUBBERS
Page 5 of 5

TABLE 1 - Non-Safety/Non-Seismic Snubber Listing

Sorted by Support MPL/Asset Number

SUPPORT MPL/ASSET NUMBER	ANALYSIS NUMBER
1N33H0144	1N33G01
1N33H0145	1N33G01
1N33H0146	1N33G01
1N63H0012	1N62G01
1N63H0013	1N62G01
1N63H0014	1N62G01
1N64H0017 (Tandem)	1N64G01
1N64H0021 (Tandem)	1N64G01
1N64H0022 (Tandem)	1N64G01
1N64H0023 (Tandem)	1N64G01

ATTACHMENT 4: FAILURE MODE GROUPS (FMG's) & ADDITIONAL TESTING
Page 1 of 2

Failure Mode Groups (FMG): Snubbers found unacceptable by inservice testing shall be evaluated for cause. The results of the evaluation shall be used if applicable to assign the unacceptable snubbers and all snubbers generically susceptible to the same failure to one or more of the Failure Mode Groups (FMG) defined below.

Application-induced failure - failures resulting from environmental conditions or improper application of the snubber.

Design or manufacturing failure - failures resulting from potential defects in manufacturing or design. This includes failures of any snubber that fails to withstand the environment or application for which it was designed.

Isolated failure - a failure which does not cause other snubbers to be suspect.

Maintenance, repair or installation failure - failures resulting from damage during maintenance, repair or installation activities.

Transient dynamic event failure - failures resulting from water or steam hammer.

Unexplained failure - failures that cannot be classified into any of the above Failure Mode Group categories.

ATTACHMENT 4: FAILURE MODE GROUPS (FMG's) & ADDITIONAL TESTING
Page 2 of 2

Additional Testing: Test failures may require additional testing depending on the Failure Mode Group category and the extent of corrective action. For each snubber found unacceptable through inservice testing one additional sample shall be selected and tested according to the table below. Except for unexplained and isolated failures, additional snubbers shall be selected randomly from the untested snubbers in the Failure Mode Group. For unexplained failures, the selection shall be from the test group (TG). However, regardless of whether the source of additional snubbers is selected from the Failure Mode Group or the test group, the size of any additional sample will be 1/2 of the test group's initial sample size rounded up to the next integer. Testing will continue until no more unacceptable snubbers are found.

FMG Category	Additional Testing	Sample Source	Sample Size
Application-induced failure	Not required if all FMG snubbers are replaced or modified OR if all unacceptable snubbers in the FMG are replaced or repaired and the environment or application is made compatible; otherwise required.	FMG/DTPG	1/2 initial sample
Design or manufacturing failure	Not required if all FMG snubbers are replaced or modified; otherwise required.	FMG/DTPG	1/2 initial sample
Maintenance, repair or installation failure	Required	FMG/DTPG	1/2 initial sample
Isolated failure	Not required	N/A	N/A
Transient dynamic event failure	Stroke or test all in FMG	FMG	100% FMG
Unexplained failure	Required	DTPG (Note 1)	1/2 initial sample

NOTE 1: As practical, the additional sample from the test group (DTPG) shall include the following:

(a) Snubbers of the same manufacturing design.
(b) Snubbers immediately adjacent to the unacceptable snubbers.
(c) Snubbers from the same piping system.
(d) Snubbers from the similar piping systems.
(e) Snubbers that are previously untested.