Palo Verde Nuclear Generating Station (PVNGS)
License Amendment Request
Pre-Licensing Meeting

Arizona Public Service Company (APS)

Presentation to

U.S. Nuclear Regulatory Commission (NRC) Staff

Rockville, MD – March 29, 2011

Agenda

- Introductions
- November 2010 NRC/APS Meeting
- Revised License Amendment Request (LAR)
- APS Responses to NRC Questions
- Q&A

November 2010 NRC/APS Meeting

- APS submitted LAR on August 25, 2010
- Nonconservative Technical Specification (TS)
  - TS 3.7.4, “Atmospheric Dump Valves (ADVs)”
  - Limiting Condition for Operation – two operable ADVs
  - Single failure criterion – four operable ADVs
- PVNGS main steam system
- ADV design and licensing bases
- ADV tests and performance history
- NUREG-1432 Standard Technical Specifications
- Combustion Engineering plants

November 2010 NRC/APS Meeting

- Description of proposed LAR
  - TS LCO 3.7.4
    - Two ADV lines per Steam Generator (SG) to be operable
  - Condition A
    - One inoperable ADV line – Continued operation for up to 7 days
    - Separate condition entry allowed for each SG
  - Condition B
    - Two inoperable ADV lines on one SG – Continued operation for up to 72 hours
  - Condition C
    - Four inoperable ADV lines – Continued operation for up to 24 hours

November 2010 NRC/APS Meeting

- Feedback from NRC staff
- APS withdrew LAR on December 9, 2010
- NRC acknowledgment of December 21, 2010
  - Pre-licensing meeting
  - Four NRC Staff questions

Revised LAR

- Limiting Condition for Operation (LCO)
- Conditions
  - Configurations with one or more inoperable ADVs
  - Action statements
  - Completion times
- Bases
  - Safety analyses
  - Single failures
  - NUREG-1432 STS and STS Bases
  - Other governing Technical Specifications

Revised LAR

- LCO 3.7.4, “Atmospheric Dump Valves (ADVs)”
  - Four ADV lines shall be operable
  - Modes 1, 2, 3, and 4 (when SG relied upon for heat removal)
- Bases for LCO
  - Resolves non-conservative TS
  - Design Basis Events
  - General Design Criteria (GDC) 34 – Heat removal
  - Safety analyses (e.g., LOCA) – credit one ADV per SG
  - Single failure – one ADV per SG rendered inoperable

Revised LAR

- Condition A
  - One required ADV line inoperable
  - Separate condition entry allowed for each SG
- Action
  - Restore ADV line to operable status
- Completion time
  - 7 days

Revised LAR

- Bases for Condition A
  - STS – 7-day CT for one inoperable ADV on one SG
  - Separate condition entry (one ADV inoperable per SG)
    - Plant configuration consistent with safety analyses
    - Single failure not postulated during CT (GL 80-030)
    - Maintenance considerations
    - Assessment of Risk – More than one hundred times below allowable RG 1.177 limits - Green RMAL
    - More restrictive TS exist for certain electrical components that support ADV operability

Revised LAR

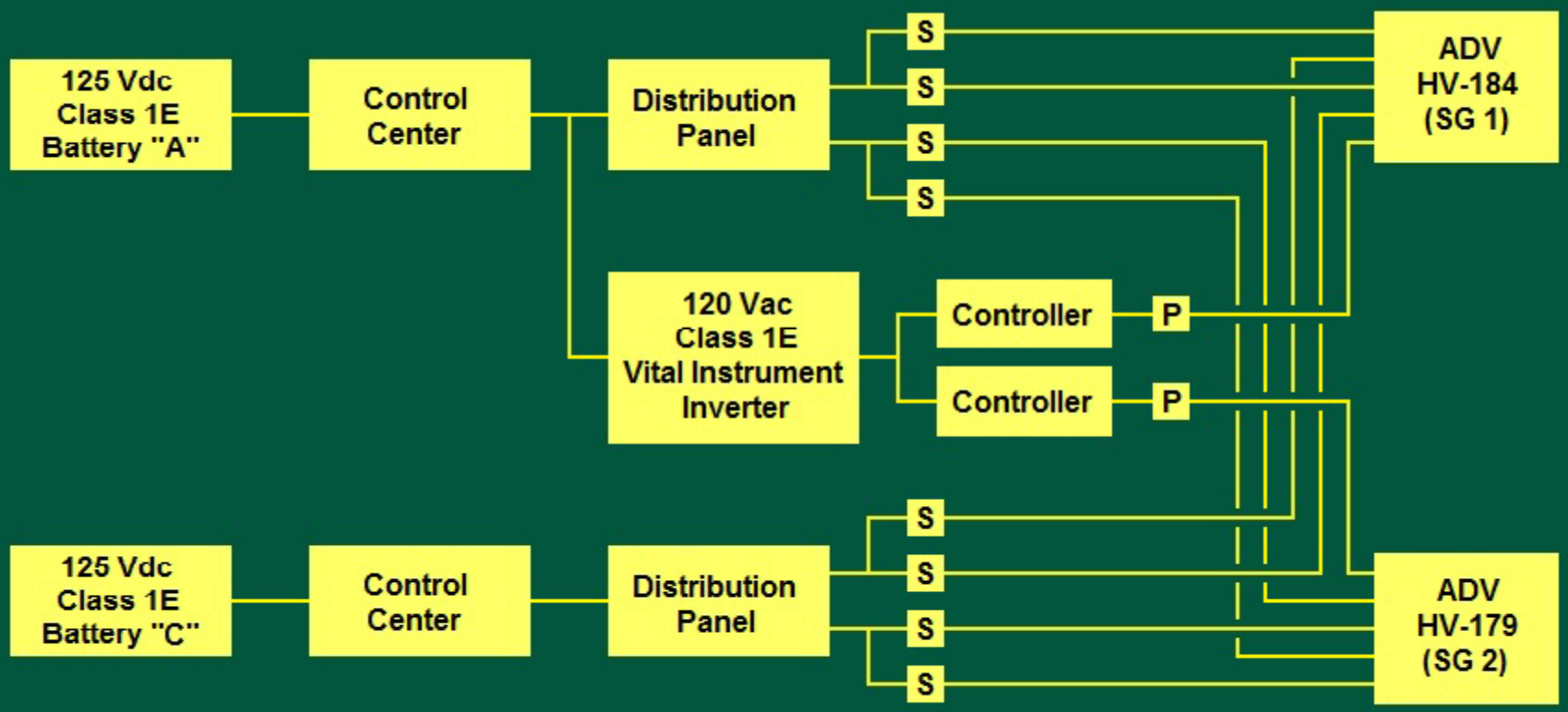

Simplified ADV Electrical Power and Control Schematic

S = Solenoid valve (open permissive)
P = I/P converter (open positioner)

Revised LAR

- Bases for Condition A (continued)
  - More restrictive TS
    - TS LCO 3.8.4, “DC Sources – Operating”
    - TS LCO 3.8.7, “Inverters – Operating”
    - TS LCO 3.8.9, “Distribution Systems – Operating”
    - Examples
      - One DC electrical power distribution subsystem inoperable – Restore within 2 hours
      - One AC vital instrument bus electrical power distribution subsystem inoperable – Restore within 2 hours
      - One inverter inoperable – Restore within 7 days
      - Unit shutdown required if actions and CTs not met

Revised LAR

- Bases for Condition A (continued)
  - Other guidance
    - PVNGS TS 3.0.3
      - LCO and actions not met / action not provided
      - Take action within one hour to initiate unit shutdown
    - STS 3.7.4 Condition B
      - 24-hour CT for two inoperable ADVs
      - CT is too restrictive for analyzed plant configuration
    - NRC staff guidance (ML071230105)
      - ". . . The STS typically allows a 72 hour or longer Completion Time for Conditions where the remaining operable equipment is able to mitigate postulated accidents without assuming a concurrent single active failure. . . ."

Revised LAR

- Condition B
  - Two or more ADV lines inoperable

  AND
  - Both ADV lines inoperable on one or more SGs
- Action
  - Restore all but one ADV line to operable status on each affected SG
- Completion time
  - 24 hours

Revised LAR

- Bases for Condition B
  - STS – 24-hour CT for two or more inoperable ADVs
  - STS Bases – 24-hour CT based on the availability of the Steam Bypass Control System (SBCS) and MSSVs, and the low probability of an event occurring during this period
  - Condition B modified to account for Condition A separate condition entry
  - Requires timely restoration of plant configuration to analyzed configuration

Revised LAR

- Condition C (not revised)
  - Required action and associated CT not met
- Actions and CTs
  - Be in Mode 3 within 6 hours, and
  - Be in Mode 4 without reliance on SG for heat removal within 24 hours
- Bases for Condition C
  - Same as STS
  - Same as current TS 3.7.4, Condition C

APS Responses to NRC Questions

- Question #1
  - The licensee is requesting "A separate condition entry for each SG" for Condition "A" for one ADV inoperable for a 7-day completion time (CT). Standard Technical Specifications (STS) do not permit separate condition entry. Please justify why separate entry condition would be acceptable.

APS Responses to NRC Questions

- Response to Question #1
  - Separate entry is justified by ADV redundancy
    - Two ADVs (one per SG) remain operable
    - Plant configuration analyzed (e.g., LOCA)
  - Other methods to support heat removal
    - Steam Bypass Control System (SBCS)
    - Main Steam Safety Valves (MSSVs)

APS Responses to NRC Questions

- Question #2
  - The licensee is requesting a 72-hour completion time for two ADVs inoperable on one SG for Condition "B." STS Condition "B" does not allow two inoperable ADVs on one SG for more than 24 hours. Please explain how a design-basis event could be mitigated if an accident on the SG with the operable ADV results in no ADVs available for accident mitigation.

APS Responses to NRC Questions

- Response to Question #2
  - Revised LAR is more restrictive
    - Would not allow continued operation for up to 72 hours with two ADV lines inoperable on one SG
    - Would allow continued operation for up to 24 hours in this configuration
    - Consistent with STS

APS Responses to NRC Questions

- Question #3
  - STS does not permit separate entry conditions on multiple SGs, and the limiting condition for operation is written to address only one SG at a time; therefore, only one SG is permitted to have two ADVs inoperable. In its LAR, the licensee assumes that STS Condition "B" allows two ADVs to be inoperable on two SGs for 24 hours, and uses this logic on page 9 of its LAR to help justify that the proposed 72-hour CT is more conservative than STS. Please justify the assumption and provide additional information to show that the design basis can be met.

APS Responses to NRC Questions

- Response to Question #3
  - Addressed by responses to Questions #1 and #2

APS Responses to NRC Questions

- Question #4
  - The NRC staff understands that the licensee is requesting a CT in order to perform maintenance and testing of the ADVs while the units are on-line. Please provide information to show the testing is a mandatory or a self-imposed requirement based upon plant-specific equipment reliability.

APS Responses to NRC Questions

- Response to Question #4

  TS 5.5.8, "Inservice Testing Program"

  - Quarterly Test Frequencies Specified by ASME OM Code
    - Check valve closure
      - Instrument air and N_2 accumulator supply check valves
      - Use Drop Test Method supplied by N_2 Accumulator
    - Bidirectional Open Test
    - ADV Stroke timing / Fail Safe / N_2 Supply System
      - Performed quarterly and prior to startup following refueling

APS Responses to NRC Questions

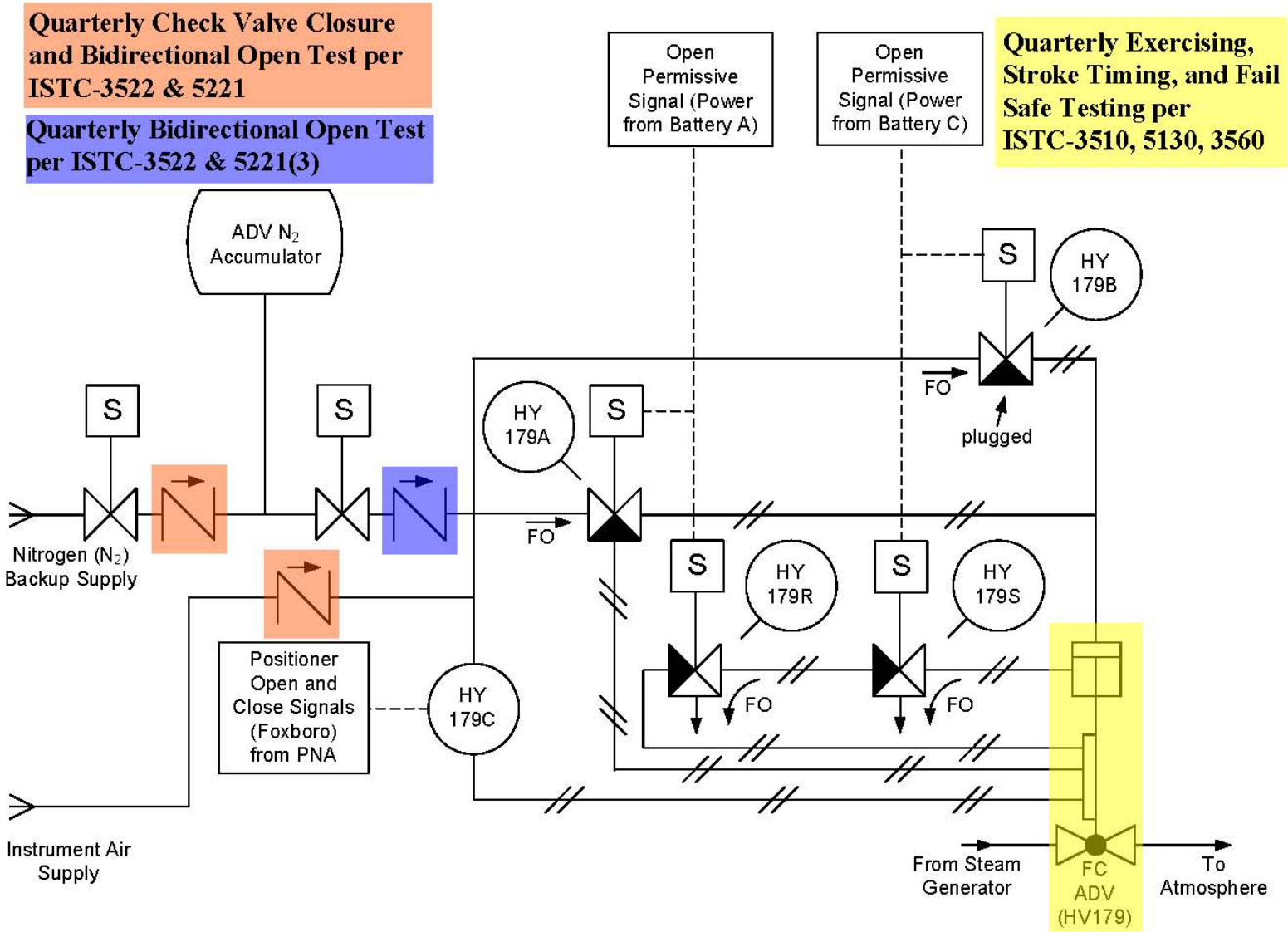

APS Responses to Four Questions

- Response to Question #4 (continued)

  TS 5.5.8, “Inservice Testing Program”

  – 2 Year Test Frequencies Specified by ASME OM Code
    - Leak test (ISTC-3630)
      - Palo Verde performs this test more frequently because credit is taken for the quarterly closure verification of the check valves
    - ADV Position Indication Test (ISTC-3700)

  TS Surveillance Requirement (SR) 3.7.4.1

    - Verify one complete cycle of each ADV every 18 months

Summary

Q&A