TABLE OF CONTENTS

Section	Title	Page
5.0	**REACTOR COOLANT SYSTEM**	
5.1	**SUMMARY DESCRIPTION**	**5.1-1**
5.1.1	SCHEMATIC FLOW DIAGRAM	5.1-6
5.1.2	PIPING AND INSTRUMENTATION DIAGRAMS	5.1-6
5.1.3	ELEVATION DRAWING	5.1-6
5.2	**INTEGRITY OF REACTOR COOLANT PRESSURE BOUNDARY**	**5.2-1**
5.2.1	DESIGN OF REACTOR COOLANT PRESSURE BOUNDARY COMPONENTS	5.2-2
5.2.1.1	PERFORMANCE OBJECTIVES	5.2-2
5.2.1.2	DESIGN PARAMETERS	5.2-3
5.2.1.3	COMPLIANCE WITH 10 CFR PART 50, SECTION 50.55A	5.2-4
5.2.1.4	APPLICABLE CODE CASES	5.2-4
5.2.1.5	DESIGN TRANSIENTS	5.2-5
5.2.1.6	IDENTIFICATION OF ACTIVE PUMPS AND VALVES	5.2-14
5.2.1.7	DESIGN OF ACTIVE PUMPS AND VALVES	5.2-15
5.2.1.8	INADVERTENT OPERATION OF VALVES	5.2-15
5.2.1.9	STRESS AND PRESSURE LIMITS	5.2-15
5.2.1.10	STRESS ANALYSIS FOR STRUCTURAL ADEQUACY	5.2-15
5.2.1.11	ANALYSIS METHODS FOR FAULTED CONDITIONS	5.2-33
5.2.1.12	PROTECTION AGAINST ENVIRONMENTAL FACTORS	5.2-33
5.2.1.13	COMPLIANCE WITH CODE REQUIREMENTS	5.2-33
5.2.1.14	STRESS ANALYSIS FOR FAULTED CONDITIONS LOADINGS	5.2-33
5.2.1.15	STRESS LEVELS IN CATEGORY I SYSTEMS	5.2-33
5.2.1.16	ANALYTICAL METHODS FOR STRESSES IN PUMPS AND VALVES	5.2-33
5.2.1.17	ANALYTICAL METHODS FOR EVALUATION OF PUMP SPEED AND BEARING INTEGRITY	5.2-33
5.2.1.18	OPERATION OF ACTIVE VALVES UNDER TRANSIENT LOADINGS	5.2-34
5.2.2	OVERPRESSURIZATION PROTECTION	5.2-34
5.2.2.1	LOCATION OF PRESSURE RELIEF DEVICES	5.2-34
5.2.2.2	MOUNTING OF PRESSURE RELIEF DEVICES	5.2-34
5.2.2.3	REPORT ON OVERPRESSURE PROTECTION	5.2-34

TABLE OF CONTENTS

Section	Title	Page
5.2.2.4	RCS PRESSURE CONTROL DURING LOW TEMPERATURE OPERATION	5.2-36
5.2.3	GENERAL MATERIAL CONSIDERATIONS	5.2-41
5.2.3.1	MATERIAL SPECIFICATIONS	5.2-41
5.2.3.2	COMPATIBILITY WITH REACTOR COOLANT	5.2-41
5.2.3.3	COMPATIBILITY WITH EXTERNAL INSULATION AND ENVIRONMENTAL ATMOSPHERE	5.2-42
5.2.3.4	CHEMISTRY OF REACTOR COOLANT	5.2-42
5.2.4	FRACTURE TOUGHNESS	5.2-43
5.2.4.1	COMPLIANCE WITH CODE REQUIREMENTS	5.2-43
5.2.4.2	ACCEPTABLE FRACTURE ENERGY LEVELS	5.2-44
5.2.4.3	OPERATING LIMITATIONS DURING STARTUP AND SHUTDOWN	5.2-44
5.2.5	AUSTENITIC STAINLESS STEEL	5.2-46
5.2.5.1	CLEANING AND CONTAMINATION PROTECTION PROCEDURES	5.2-47
5.2.5.2	SOLUTION HEAT TREATMENT REQUIREMENTS	5.2-48
5.2.5.3	MATERIAL INSPECTION PROGRAM	5.2-48
5.2.5.4	UNSTABLILIZED AUSTENITIC STAINLESS STEELS	5.2-48
5.2.5.5	PREVENTION OF INTERGRANULAR ATTACK OF UNSTABILIZED AUSTENITIC STAINLESS STEELS	5.2-48
5.2.5.6	RETESTING UNSTABILIZED AUSTENITIC STAINLESS STEEL EXPOSED TO SENSITIZATION TEMPERATURES	5.2-51
5.2.5.7	CONTROL OF DELTA FERRITE IN AUSTENITIC STAINLESS STEEL WELDING	5.2-52
5.2.6	PUMP FLYWHEELS	5.2-53
5.2.6.1	DESIGN BASIS	5.2-53
5.2.6.2	FABRICATION AND INSPECTION	5.2-54
5.2.6.3	ACCEPTANCE CRITERIA AND COMPLIANCE WITH REGULATORY GUIDE 1.14	5.2-54
5.2.7	RCPB LEAKAGE DETECTION SYSTEMS	5.2-55
5.2.7.1	COLLECTION OF IDENTIFIED LEAKAGE	5.2-55
5.2.7.2	UNIDENTIFIED LEAKAGE TO CONTAINMENT	5.2-56
5.2.7.3	METHODS OF DETECTION	5.2-56
5.2.7.4	INTERSYSTEM LEAKAGE DETECTION	5.2-59

TABLE OF CONTENTS

Section	Title	Page
5.2.7.5	UNIDENTIFIED LEAKAGE SYSTEM SENSITIVITY AND RESPONSE TIME	5.2-63
5.2.7.6	SEISMIC CAPABILITY	5.2-65
5.2.7.7	INDICATORS AND ALARMS	5.2-65
5.2.7.8	TESTING	5.2-65
5.2.8	INSERVICE INSPECTION OF ASME CODE CLASS 1 COMPONENTS	5.2-66
5.2.8.1	COMPONENTS SUBJECT TO EXAMINATION AND/OR TEST	5.2-66
5.2.8.2	ACCESSIBILITY	5.2-66
5.2.8.3	EXAMINATION TECHNIQUES AND PROCEDURES	5.2-68
5.2.8.4	INSPECTION INTERVALS	5.2-68
5.2.8.5	EXAMINATION CATEGORIES AND REQUIREMENTS	5.2-68
5.2.8.6	EVALUATION OF EXAMINATION RESULTS	5.2-68
5.2.8.7	SYSTEM PRESSURE TESTS	5.2-68
5.3	**THERMAL HYDRAULIC SYSTEM DESIGN**	**5.3-1**
5.3.1	ANALYTICAL METHODS AND DATA	5.3-1
5.3.2	OPERATING RESTRICTIONS ON PUMPS	5.3-1
5.3.3	POWER-FLOW OPERATING MAP (BWR)	5.3-1
5.3.4	TEMPERATURE-POWER OPERATING MAP	5.3-1
5.3.5	LOAD FOLLOWING CHARACTERISTICS	5.3-1
5.3.6	TRANSIENT EFFECTS	5.3-1
5.3.7	THERMAL AND HYDRAULIC CHARACTERISTICS SUMMARY TABLE	5.3-1
5.4	**REACTOR VESSEL AND APPURTENANCES**	**5.4-1**
5.4.1	DESIGN BASES	5.4-1
5.4.1.1	CODES AND SPECIFICATIONS	5.4-1
5.4.1.2	DESIGN TRANSIENTS	5.4-1
5.4.1.3	PROTECTION AGAINST NON-DUCTILE FAILURE	5.4-2
5.4.1.4	INSPECTION	5.4-2
5.4.2	DESCRIPTION	5.4-2
5.4.2.1	FABRICATION PROCESSES	5.4-3
5.4.2.2	PROTECTION OF CLOSURE STUDS	5.4-4
5.4.3	EVALUATION	5.4-4
5.4.3.1	STEADY STATE STRESSES	5.4-4
5.4.3.2	FATIGUE ANALYSIS BASED ON TRANSIENT STRESSES	5.4-4

TABLE OF CONTENTS

Section	Title	Page
5.4.3.3	THERMAL STRESSES DUE TO GAMMA HEATING	5.4-4
5.4.3.4	THERMAL STRESSES DUE TO LOSS OF COOLANT ACCIDENT	5.4-4
5.4.3.5	HEATUP AND COOLDOWN	5.4-4
5.4.3.6	IRRADIATION SURVEILLANCE PROGRAMS	5.4-4
5.4.3.7	CAPABILITY FOR ANNEALING THE REACTOR VESSEL	5.4-14
5.4.4	TESTS AND INSPECTIONS	5.4-15
5.4.4.1	ULTRASONIC EXAMINATIONS	5.4-15
5.4.4.2	PENETRANT EXAMINATIONS	5.4-15
5.4.4.3	MAGNETIC PARTICLE EXAMINATION	5.4-15
5.4.4.4	INSERVICE INSPECTION	5.4-16
5.5	**COMPONENT AND SUBSYSTEM DESIGN**	**5.5-1**
5.5.1	REACTOR COOLANT PUMPS	5.5-1
5.5.1.1	DESIGN BASES	5.5-1
5.5.1.2	DESIGN DESCRIPTION	5.5-1
5.5.1.3	DESIGN EVALUATION	5.5-3
5.5.1.4	TESTS AND INSPECTIONS	5.5-8
5.5.2	STEAM GENERATORS	5.5-8
5.5.2.1	DESIGN BASIS	5.5-8
5.5.2.2	DESIGN DESCRIPTION	5.5-9
5.5.2.3	DESIGN EVALUATION	5.5-9
5.5.2.4	TESTS AND INSPECTIONS	5.5-15
5.5.3	REACTOR COOLANT PIPING	5.5-16
5.5.3.1	DESIGN BASES	5.5-16
5.5.3.2	DESIGN DESCRIPTION	5.5-16
5.5.3.3	DESIGN EVALUATION	5.5-19
5.5.3.4	TESTS AND INSPECTIONS	5.5-20
5.5.4	STEAM OUTLET FLOW RESTRICTOR (STEAM GENERATOR)	5.5-21
5.5.4.1	DESIGN BASIS	5.5-21
5.5.4.2	DESCRIPTION	5.5-21
5.5.4.3	EVALUATION	5.5-21
5.5.4.4	TESTS AND INSPECTIONS	5.5-22
5.5.5	MAIN STEAM LINE ISOLATION SYSTEM	5.5-22
5.5.6	REACTOR VESSEL HEAD VENT SYSTEM	5.5-22
5.5.6.1	DESIGN BASIS	5.5-22

TABLE OF CONTENTS

Section	Title	Page
5.5.6.2	SYSTEM DESCRIPTION	5.5-22
5.5.6.3	DESIGN EVALUATION	5.5-24
5.5.7	RESIDUAL HEAT REMOVAL SYSTEM	5.5-25
5.5.7.1	DESIGN BASES	5.5-25
5.5.7.2	SYSTEM DESCRIPTION	5.5-26
5.5.7.3	DESIGN EVALUATION	5.5-30
5.5.7.4	TESTS AND INSPECTIONS	5.5-33
5.5.8	REACTOR COOLANT CLEANUP SYSTEM	5.5-33
5.5.9	MAIN STEAM LINE AND FEEDWATER PIPING	5.5-33
5.5.10	PRESSURIZER	5.5-33
5.5.10.1	DESIGN BASES	5.5-33
5.5.10.2	DESIGN DESCRIPTION	5.5-34
5.5.10.3	DESIGN EVALUATION	5.5-36
5.5.10.4	TESTS AND INSPECTIONS	5.5-38
5.5.11	PRESSURIZER RELIEF TANK	5.5-39
5.5.11.1	DESIGN BASES	5.5-39
5.5.11.2	DESIGN DESCRIPTION	5.5-39
5.5.11.3	DESIGN EVALUATION	5.5-40
5.5.12	VALVES	5.5-40
5.5.12.1	DESIGN BASES	5.5-40
5.5.12.2	DESIGN DESCRIPTION	5.5-40
5.5.12.3	DESIGN EVALUATION	5.5-41
5.5.12.4	TESTS AND INSPECTIONS	5.5-41
5.5.13	SAFETY AND RELIEF VALVES	5.5-42
5.5.13.1	DESIGN BASES	5.5-42
5.5.13.2	DESIGN DESCRIPTION	5.5-42
5.5.13.3	DESIGN EVALUATION	5.5-42
5.5.13.4	TESTS AND INSPECTIONS	5.5-43
5.5.14	COMPONENT SUPPORTS	5.5-43
5.5.14.1	DESIGN BASES	5.5-43
5.5.14.2	DESCRIPTION	5.5-43
5.5.14.3	EVALUATION	5.5-45
5.5.14.4	TESTS AND INSPECTIONS	5.5-45
5.6	**INSTRUMENTATION APPLICATION**	**5.6-1**

TABLE OF CONTENTS

Section	Title	Page

THIS PAGE INTENTIONALLY BLANK

LIST OF TABLES

Section	Title
TABLE 5.1-1	SYSTEM DESIGN AND OPERATING PARAMETERS
TABLE 5.2-1	APPLICABLE CODE ADDENDA
TABLE 5.2-2	SUMMARY OF REACTOR COOLANT SYSTEM DESIGN TRANSIENTS
TABLE 5.2-3	SUMMARY OF REACTOR COOLANT SYSTEM DESIGN TRANSIENTS (STEAM GENERATOR AND PRESSURIZER ONLY)
TABLE 5.2-4	LOADING COMBINATIONS FOR ASME CLASS 1 COMPONENTS AND SUPPORTS (EXCLUDING PIPE SUPPORTS)
TABLE 5.2-5	ALLOWABLE STRESSES FOR ASME SECTION III CLASS 1 COMPONENTS(1,3)
TABLE 5.2-6	RELIEF VALVE DISCHARGE TO THE PRESSURIZER RELIEF TANK
TABLE 5.2-7	REACTOR COOLANT SYSTEM DESIGN PRESSURE SETTINGS
TABLE 5.2-8	REACTOR COOLANT PRESSURE BOUNDARY MATERIAL CLASS 1 PRIMARY COMPONENTS
TABLE 5.2-9	REACTOR COOLANT PRESSURE BOUNDARY MATERIALS CLASS 1 AND 2 AUXILIARY COMPONENTS
TABLE 5.2-10	REACTOR COOLANT WATER CHEMISTRY SPECIFICATIONS
TABLE 5.2-11A	WATTS BAR UNIT 1 REACTOR VESSEL TOUGHNESS DATA
TABLE 5.2-11B	WATTS BAR UNIT NO. 2 REACTOR VESSEL TOUGHNESS DATA
TABLE 5.2-12	REACTOR VESSEL INTERNALS, INCLUDING EMERGENCY CORE COOLING SYSTEMS
TABLE 5.2-13	MAXIMUM RPV DISPLACEMENTS (NODE #3)
TABLE 5.2-14	MAXIMUM REACTOR VESSEL SUPPORT LOADS FOR POSTULATED PIPE RUPTURE CONDITIONS
TABLE 5.2-15	STEAM GENERATOR LOWER SUPPORT MEMBER STRESSES
TABLE 5.2-16	STEAM GENERATOR UPPER SUPPORT MEMBER STRESSES
TABLE 5.2-17	RC PUMP SUPPORT MEMBER STRESSES
TABLE 5.2-18	PRIMARY PIPE RESTRAINT LOADS AND STRESSES
TABLE 5.2-19	REACTOR VESSEL SUPPORT LOADS
TABLE 5.2-20	REACTOR VESSEL SUPPORT STRESSES
TABLE 5.2-21	CRDM HEAD ADAPTOR BENDING MOMENTS
TABLE 5.4-1	REACTOR VESSEL DESIGN PARAMETERS

LIST OF TABLES

Section	Title
TABLE 5.4-2	REACTOR VESSEL QUALITY ASSURANCE PROGRAM
TABLE 5.5-1	REACTOR COOLANT PUMP DESIGN PARAMETERS
TABLE 5.5-2	REACTOR COOLANT PUMP QUALITY ASSURANCE PROGRAM
TABLE 5.5-3B	STEAM GENERATOR DESIGN DATA
TABLE 5.5-4B	STEAM GENERATOR QUALITY ASSURANCE PROGRAM DURING CONSTRUCTION (1)
TABLE 5.5-5	REACTOR COOLANT PIPING DESIGN PARAMETERS (SHEET 1 OF 1)
TABLE 5.5-6	REACTOR COOLANT PIPING QUALITY ASSURANCE PROGRAM (SHEET 1 OF 1)
TABLE 5.5-7	DESIGN BASES FOR RESIDUAL HEAT REMOVAL SYSTEM OPERATION
TABLE 5.5-8	RESIDUAL HEAT REMOVAL SYSTEM COMPONENT DATA
TABLE 5.5-9	PRESSURIZER DESIGN DATA
TABLE 5.5-10	PRESSURIZER QUALITY ASSURANCE PROGRAM
TABLE 5.5-11	PRESSURIZER RELIEF TANK DESIGN DATA
TABLE 5.5-12	REACTOR COOLANT SYSTEM VALVE DESIGN PARAMETERS
TABLE 5.5-13	REACTOR COOLANT SYSTEM VALVES QUALITY ASSURANCE PROGRAM
TABLE 5.5-14	PRESSURIZER VALVES DESIGN PARAMETERS
TABLE 5.5-15	DELETED BY AMENDMENT 78
TABLE 5.5-15A	FAILURE MODES AND EFFECTS ANALYSIS FOR ACTIVE FAILURES FOR THE RESIDUAL HEAT REMOVAL SYSTEM
TABLE 5.5-15B	FAILURE MODES AND EFFECTS ANALYSIS FOR PASSIVE FAILURES FOR THE RESIDUAL HEAT REMOVAL SYSTEM
TABLE 5.5-16	REACTOR VESSEL HEAD VENT SYSTEM COMPONENT DATA (SHEET 1 OF 1)

LIST OF FIGURES

Section	Title
FIGURE 5.1-1	POWERHOUSE UNIT 1 - ELECTRICAL CONTROL DIAGRAM - REACTOR COOLANT SYSTEM (SHEET 3)
FIGURE 5.1-1	POWERHOUSE UNIT 1 - ELECTRICAL CONTROL DIAGRAM - REACTOR COOLANT SYSTEM (SHEET 3)
FIGURE 5.1-1	POWERHOUSE UNIT 1 - ELECTRICAL CONTROL DIAGRAM - REACTOR COOLANT SYSTEM (SHEET 4)
FIGURE 5.1-1	POWERHOUSE UNIT 1 - ELECTRICAL CONTROL DIAGRAM - REACTOR COOLANT SYSTEM (SHEET 3)
FIGURE 5.1-1	POWERHOUSE UNIT 1 - ELECTRICAL CONTROL DIAGRAM - REACTOR COOLANT SYSTEM (SHEET 4)
FIGURE 5.1-1	POWERHOUSE UNIT 2- ELECTRICAL CONTROL DIAGRAM - REACTOR COOLANT SYSTEM (SHEET 4A)
FIGURE 5.1-1-1	POWERHOUSE UNIT 1 - FLOW DIAGRAM - REACTOR COOLANT SYSTEM
FIGURE 5.1-1-2	POWERHOUSE UNIT 1 ELECTRICAL CONTROL DIAGRAM REACTOR COOLANT SYSTEM
FIGURE 5.1-1-2	POWERHOUSE UNIT 2 - ELECTRICAL CONTROL DIAGRAM - REACTOR COOLANT SYSTEM (SHEET A)
FIGURE 5.1-1-5	POWERHOUSE UNIT 1 - ELECTRICAL CONTROL DIAGRAM - REACTOR COOLANT SYSTEM
FIGURE 5.1-1-5	POWERHOUSE UNIT 2 - ELECTRICAL CONTROL DIAGRAM - REACTOR COOLANT SYSTEM (SHEET A)
FIGURE 5.1-1-6	POWERHOUSE UNIT 1 - ELECTRICAL CONTROL DIAGRAM - REACTOR COOLANT SYSTEM
FIGURE 5.1-1-6	POWERHOUSE UNIT 1- ELECTRICAL CONTROL DIAGRAM - REACTOR COOLANT SYSTEM (SHEET A)
FIGURE 5.1-1-7	POWERHOUSE UNIT 1 AND 2 - ELECTRICAL CONTROL DIAGRAM - REACTOR COOLANT SYSTEM
FIGURE 5.1-1-8	POWERHOUSE UNIT 1- ELECTRICAL CONTROL DIAGRAM - REACTOR COOLANT SYSTEM 20
FIGURE 5.1-2	PUMP HEAD - FLOW CHARACTERISTICS
FIGURE 5.1-3	REACTOR COOLANT SYSTEM - PROCESS FLOW DIAGRAM (SHEET 1)
FIGURE 5.1-1-3	POWERHOUSE UNIT 2 - ELECTRICAL CONTROL DIAGRAM - REACTOR COOLANT SYSTEM (SHEET A)
FIGURE 5.1-3	REACTOR COOLANT SYSTEM - PROCESS FLOW DIAGRAM FIGURE 5.2-1REACTOR COOLANT LOOP SUPPORTS SYSTEM, DYNAMIC STRUCTURAL MODE

LIST OF FIGURES

Section	Title
FIGURE 5.2-2	REACTOR PRESSURE VESSEL LUMPED - MASS MODEL
FIGURE 5.2-3	THROUGH-WALL THERMAL GRADIENTS
FIGURE 5.2-4	K_{ID} LOWER BOUND FRACTURE TOUGHNESS A533V (REFERENCE WCAP 7623) GRADE B CLASS 1
FIGURE 5.2-5	REACTOR VESSEL SUPPORT SHOE
FIGURE 5.2-6	STRUCTURAL STEEL EQUIPMENT SUPPORT REACTOR SUPPORTS
FIGURE 5.2-7A	DELETED BY AMENDMENT 97
FIGURE 5.2-7B	DELETED BY AMENDMENT 97
FIGURE 5.2-8A	DELETED BY AMENDMENT 97
FIGURE 5.2-8B	DELETED BY AMENDMENT 97
FIGURE 5.2-9	STEAM GENERATOR LOWER SUPPORT MODEL
FIGURE 5.2-10	REACTOR COOLANT PUMP SUPPORT MODEL
FIGURE 5.2-11	STEAM GENERATOR UPPER MODEL
FIGURE 5.2-12	NONLINEAR CRDM ROW MODEL
FIGURE 5.2-13	DELETED IN AMENDMENT 78
FIGURE 5.2-14	DELETED IN AMENDMENT 78
FIGURE 5.2-15	DELETED IN AMENDMENT 49
FIGURE 5.2-16	DELETED IN AMENDMENT 49
FIGURE 5.2-17	REACTOR BUILDING FLOOR AND EQUIPMENT DRAINS
FIGURE 5.3-1	REACTOR COOLANT SYSTEM TEMPERATURE - PERCENT POWER MAP
FIGURE 5.5-1	REACTOR COOLANT CONTROLLED LEAKAGE PUMP
FIGURE 5.5-2	REACTOR COOLANT PUMP ESTIMATED PERFORMANCE CHARACTERISTIC
FIGURE 5.5-3	UNIT 2 STEAM GENERATOR
FIGURE 5.5-4-1	POWERHOUSE UNITS 1 & 2 - FLOW DIAGRAM - RESIDUAL HEAT REMOVAL SYSTEM
FIGURE 5.5-4-2	POWERHOUSE UNIT 1 - ELECTRICAL CONTROL DIAGRAM - RESIDUAL HEAT REMOVAL SYSTEM
FIGURE 5.5-5	PRESSURIZER
FIGURE 5.5-6	REACTOR VESSEL SUPPORTS
FIGURE 5.5-7	ICE CONDENSER STEAM GENERATOR SUPPORTS
FIGURE 5.5-8	REACTOR COOLANT PUMP SUPPORTS

LIST OF FIGURES

Section	Title
FIGURE 5.5-9	PRESSURIZER SUPPORTS
FIGURE 5.5-10	CROSSOVER LEG RESTRAINTS
FIGURE 5.5-11	CROSSOVER LEG VERTICAL RUN RESTRAINT
FIGURE 5.5-12	STEAM GENERATOR INLET RESTRAINTS
FIGURE 5.5-13	PRIMARY SHIELD -WALL RESTRAINTS

LIST OF FIGURES

Section **Title**

THIS PAGE INTENTIONALLY BLANK

5.0 REACTOR COOLANT SYSTEM

5.1 SUMMARY DESCRIPTION

The reactor coolant system (RCS), shown in Figure 5.1-1-1, consists of four similar heat transfer loops connected in parallel to the reactor pressure vessel. Each loop contains a reactor coolant pump, steam generator and associated piping and valves. In addition, the system includes a pressurizer, a pressurizer relief tank, interconnecting piping and instrumentation necessary for operational control. The above components are located in the containment building.

During operation, the RCS transfers the heat generated in the core to the steam generators where steam is produced to drive the turbine generator. Borated demineralized light water is circulated in the RCS at a flow rate and temperature consistent with achieving the reactor core thermal-hydraulic performance presented in Section 4.4. The water also acts as a neutron moderator and reflector, and as a solvent for the neutron absorber used in chemical shim control.

The RCS pressure boundary provides a barrier against the release of radioactivity generated within the reactor, and is designed to ensure a high degree of integrity throughout the life of the plant.

RCS pressure is controlled by the use of the pressurizer where water and steam are maintained in equilibrium by electrical heaters and water sprays. Steam can be formed (by the heaters) or condensed (by the pressurizer spray) to minimize pressure variations due to contraction and expansion of the reactor coolant. Three spring-loaded safety valves and two power-operated relief valves are mounted on the pressurizer and discharge to the pressurizer relief tank, where the steam is condensed and cooled by mixing with water.

The extent of the RCS is defined as:

(1) The reactor vessel including control rod drive mechanism housings.

(2) The reactor coolant side of the steam generators.

(3) Reactor coolant pumps.

(4) A pressurizer attached to one of the reactor coolant loops.

(5) Safety and relief valves.

(6) The interconnecting piping, valves and fittings between the principal components listed above.

(7) The piping, fittings and valves leading to connecting auxiliary or support systems up to and including the second isolation valve (from the high pressure side) on each line.

Reactor Coolant System Components

Reactor Vessel

The reactor vessel is cylindrical, with a welded hemispherical bottom head and a removable, flanged and gasketed, hemispherical upper head. The vessel contains the core, core supporting structures, control rods and other parts directly associated with the core.

The vessel has inlet and outlet nozzles located in a horizontal plane just below the reactor vessel flange but above the top of the core. Coolant enters the vessel through the inlet nozzles and flows down the core barrel-vessel wall annulus, turns at the bottom and flows up through the core to the outlet nozzles.

The vessel head contains four vertical penetrations which are capped. One of the capped penetrations contains the Reactor Vessel Head Vent System (RVHVS) connection.

Steam Generators

The steam generators are vertical shell and U-tube evaporators with integral moisture separating equipment. The reactor coolant flows through the inverted U-tubes, entering and leaving through the nozzles located in the hemispherical bottom head of the steam generator. Steam is generated on the shell side and flows upward through the moisture separators to the outlet nozzle at the top of the vessel.

Reactor Coolant Pumps

The reactor coolant pumps are identical single-speed centrifugal units driven by air-water cooled, three-phase induction motors. The shaft is vertical with the motor mounted above the pump. A flywheel on the shaft above the motor provides additional inertia to extend pump coastdown. The inlet is at the bottom of the pump; discharge is on the side. Reverse rotation is prevented by a ratchet mechanism.

Reactor Vessel Head Vent System (RVHVS)

The RVHVS is a subsystem of the RCS designed to provide a means for venting noncondensibles and/or steam from the reactor vessel in a remotely operable, controlled manner. The active portion of this subsystem consists of four 1-inch solenoid-operated valves. Two parallel solenoid isolation valves are arranged in series with two parallel throttle valves. The RVHVS is connected to piping originating at the upper head of the reactor vessel and discharges to the pressurizer relief tank.

The RVHVS provides additional flexibility to the plant operator during both normal as well as accident mitigation operations. Air venting during plant startup, system venting during plant shutdown, or postaccident mitigation of nondesign basis events are all possible periods of RVHVS usage.

Piping

The reactor coolant loop piping is specified in the smallest sizes consistent with system requirements.

The hot leg inside diameter is 29 inches and the inside diameter of the cold leg return line to the reactor vessel is 27.5 inches. The piping between the steam generator and the pump suction is increased to a 31 inch inside diameter to reduce pressure drop and improve flow conditions to the pump suction.

Pressurizer

The pressurizer is a vertical, cylindrical vessel with hemispherical top and bottom heads. Electrical heaters are installed through the bottom head of the vessel while the spray nozzle, relief and safety valve connection are located in the top head of the vessel.

Pressurizer Relief Tank

The pressurizer relief tank is a horizontal, cylindrical vessel with hemispherical ends. Steam from the pressurizer safety and relief valves is discharged into the pressurizer relief tank through a sparger pipe under the water level. This condenses and cools the steam by mixing it with water that is near ambient temperature.

Safety and Relief Valves

The pressurizer safety valves are system pressure actuated, enclosed bonnet pop type valves with balancing bellows for maintaining full system pressure across the seat independent of back pressure.

The power-operated relief valves limit system pressure for large power mismatch. They are operated automatically or by remote manual control. Remotely operated valves are provided to isolate the inlet to the power-operated relief valves if excessive leakage occurs.

Reactor Coolant System Performance Characteristics

Tabulations of important design and performance characteristics of the RCS are provided in Table 5.1-1.

Reactor Coolant Flow

The reactor coolant flow, a major parameter in the design of the system and its components, is established with a detailed design procedure supported by operating plant performance data, by pump model tests and analysis, and by pressure drop tests and analyses of the reactor vessel and fuel assemblies. Data from operating plants have indicated that the actual flow has been well above the flow specified for the thermal design of the plant. By applying the design procedure described below, it is possible to specify the expected operating flow with reasonable accuracy.

Three reactor coolant flow rates are identified for the various plant design considerations. The definitions of these flows are presented in the following paragraphs, and the application of the definitions is illustrated by the system and pump hydraulic characteristics on Figure 5.1-2 for the original plant design basis. The flows for the current design basis are presented in Table 5.1-1.

Best Estimate Flow

The best estimate flow is the most likely value for the actual plant operating condition. This flow is based on a best estimate core bypass flow of 9.6% for Unit 2, on the best estimate of the reactor vessel, steam generator and piping flow resistance, and on the best estimate of the reactor coolant pump head-flow capacity, with no uncertainties assigned to either the system flow resistance or the pump head. System pressure drops, based on best estimate flow, are presented in Table 5.1-1. Although the best estimate flow is the most likely value to be expected in operation, more conservative flow rates are applied in the thermal and mechanical designs.

Thermal Design Flow

Thermal design flow is the basis for the reactor core thermal performance, the steam generator thermal performance, and the nominal plant parameters used throughout the design. To provide the required margin, the thermal design flow accounts for the uncertainties in reactor vessel, steam generator and piping flow resistances, reactor coolant pump head, and the methods used to measure flow rate. The combination of these uncertainties, which includes a conservative estimate of the pump discharge weir flow resistance, is equivalent to increasing the best estimate RCS flow resistance by approximately 19%. The intersection of this conservative flow resistance with the best estimate pump curve, as shown in Figure 5.1-2, establishes the thermal design flow. This procedure provided an original flow margin for thermal design of approximately 4.0%. Tabulations of important design and performance characteristics of the RCS as provided in Table 5.1-1 are based on the thermal design flow.

Mechanical Design Flow

Mechanical design flow is the conservatively high flow used in the mechanical design of the reactor vessel internals and fuel assemblies. To assure that a conservatively high flow is specified, the mechanical design flow for Unit 2 is based on a reduced system resistance (90% of best estimate) and on increased pump head capability (107% of best estimate). The intersection of this flow resistance with the higher pump curve, as shown on Figure 5.1-2, establishes for Unit 2 the mechanical design flow. The resulting mechanical design flow of 105,000 gpm is approximately 1.6% (Unit 2) greater than the initial best estimate flow of 103,300 gpm/loop for Unit 2.

Pump overspeed, due to a turbine generator overspeed of 20%, results in a peak reactor coolant flow of 120% of the mechanical design flow. The overspeed condition is applicable only to operating conditions when the reactor and turbine generator are at power.

The plant design system thermal and hydraulic data in Table 5.1-1 is based on plant operation with 0% steam generator tube plugging.

Interrelated Performance and Safety Functions

The interrelated performance and safety functions of the RCS and its major components are listed below:

(1) The RCS provides sufficient heat transfer capability to transfer the heat produced during power operation and when the reactor is subcritical, including the initial phase of plant cooldown, to the steam and power conversion system.

(2) The system provides sufficient heat transfer capability to transfer the heat produced during the subsequent phase of plant cooldown and cold shutdown to the residual heat removal system.

(3) The system heat removal capability under power operation and normal operational transients, including the transition from forced to natural circulation, shall assure no fuel damage within the operating bounds permitted by the reactor control and protection systems.

(4) The RCS provides the water used as the core neutron moderator and reflector and as solvent for-chemical shim control.

(5) The system maintains the homogeneity of soluble neutron poison concentration and rate of change of coolant temperature such that uncontrolled reactivity changes do not occur.

(6) The reactor vessel is an integral part of the RCS pressure boundary and is capable of accommodating the temperatures and pressures associated with the operational transients. The reactor vessel functions to support the reactor core and control rod drive mechanisms.

(7) The pressurizer maintains the system pressure during operation and limits pressure transients. During the reduction or increase of plant load, reactor coolant volume changes are accommodated in the pressurizer via the surge line.

(8) The reactor coolant pumps supply the coolant flow necessary to remove heat from the reactor core and transfer it to the steam generators.

(9) The steam generators provide high quality steam to the turbine. The tube and tubesheet boundary are designed to prevent or control to acceptable levels the transfer of activity generated within the core to the secondary system.

(10) The RCS piping serves as a boundary for containing the coolant under operating temperature and pressure conditions and for limiting leakage (and activity release) to the containment atmosphere. The RCS piping contains

demineralized borated water which is circulated at the flow rate and temperature consistent with achieving the reactor core thermal and hydraulic performance.

5.1.1 Schematic Flow Diagram

The reactor coolant system is shown schematically in Figure 5.1-3. Included on this figure is a tabulation of principal pressures, temperatures, and the flow rate of the system under normal steady state full power operating conditions. These parameters are based on the best estimate flow at the pump discharge. Reactor coolant system volume under the above conditions is presented in Table 5.1-1.

5.1.2 Piping and Instrumentation Diagrams

A piping and instrumentation diagram of the reactor coolant system is shown on Figure 5.1-1-1. The diagram shows the extent of the systems located within the containment, and the points of separation between the reactor coolant system, and the secondary (heat utilization) system.

5.1.3 Elevation Drawing

Reference information only: Figures 1.2-11, 1.2-12, 1.2-13 and 1.2-14 are cross sectional and elevation drawings providing principal dimensions of the reactor coolant system in relation to surrounding concrete structures.

References

None

Table 5.1-1 System Design And Operating Parameters
(Page 1 of 2)

	Unit 2
Plant Design Life, years	40
Nominal Operating Pressure, psig	2235
Total System Volume Including Pressurizer and Surge Line, ft^3	12,145
System Liquid Volume, Including Pressurizer Water at Maximum Guaranteed Power, ft^3	11,789
Pressurizer Spray Rate, maximum gpm	900
Pressurizer Heater Capacity, kw	1800
Pressurizer Relief Tank Volume, ft^3	1800

System Thermal and Hydraulic Data

	4 Pumps Running (0% SGTP) Unit 2
NSSS Power, MWt	3427 MWt
Reactor Power, MWt	3411 MWt
Thermal Design Flows, gpm/loop	93,100
Total Reactor Flow, 10^6 lb/hr	138.5
Temperatures, °F	
Reactor Vessel Outlet	618.6
Reactor Vessel Inlet	557.8
Steam Generator Outlet	557.4
Steam Generator Steam	542.9
Feedwater	438.4
Steam Pressure, psia	986
Total Steam Flow, 10^6 lb/hr	15.11
Best Estimate Flows, gpm	
Active Loop	103,300
Mechanical Design flows, gpm/loop	105,000

Table 5.1-1 System Design And Operating Parameters (Page 2 of 2)

System Pressure Drops
(4 loop best estimate flow of 103,300 gpm/loop Unit 2)

	Unit 2 0% SGTP
Reactor Vessel ΔP, psi	48.2
Steam Generator ΔP, psi	36.9
RCS Piping ΔP, psi	8.22
Pump Head, feet	290.8

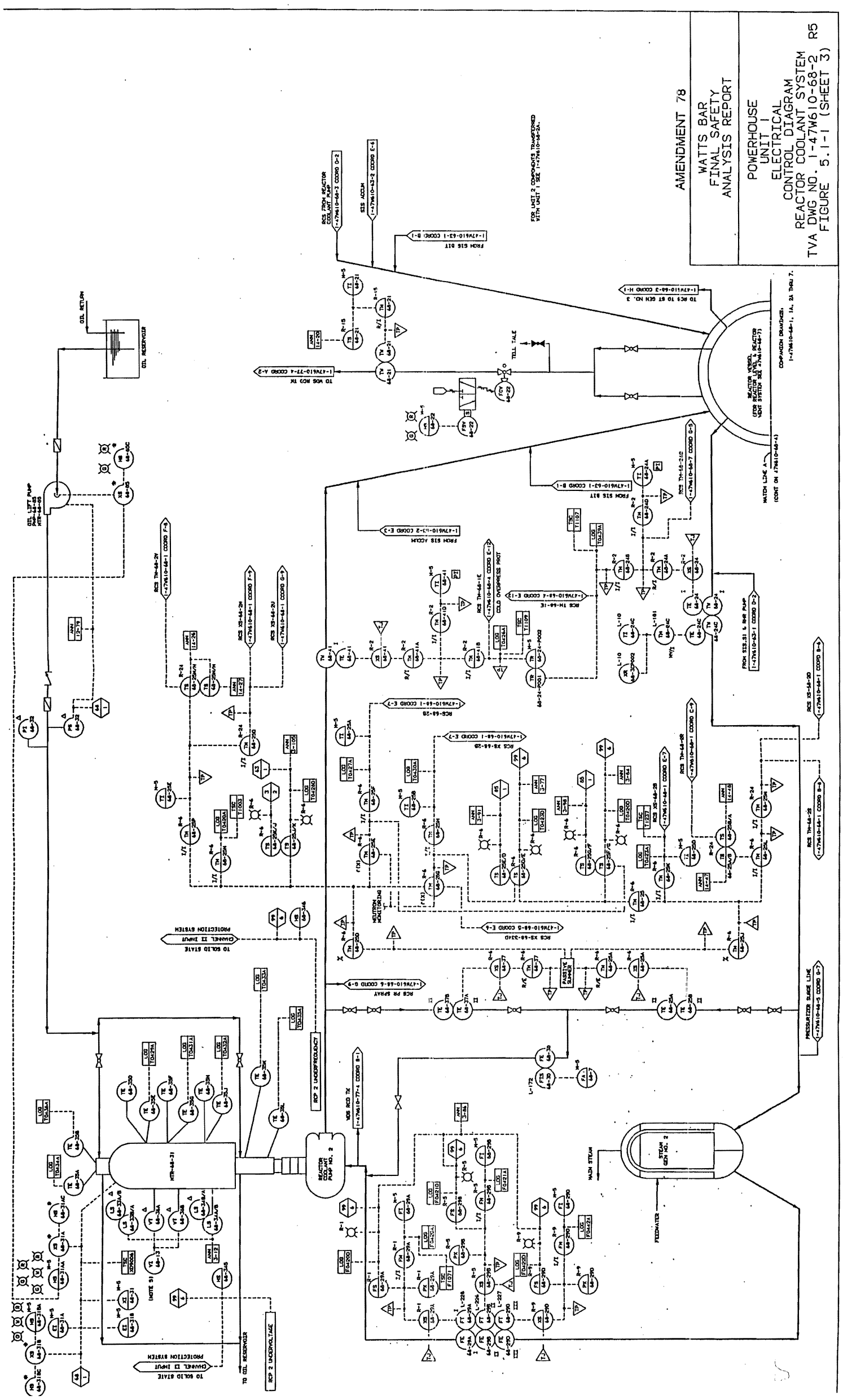

Figure 5.1-1 Powerhouse Unit 1 - Electrical Control Diagram - Reactor Coolant System (Sheet 3)

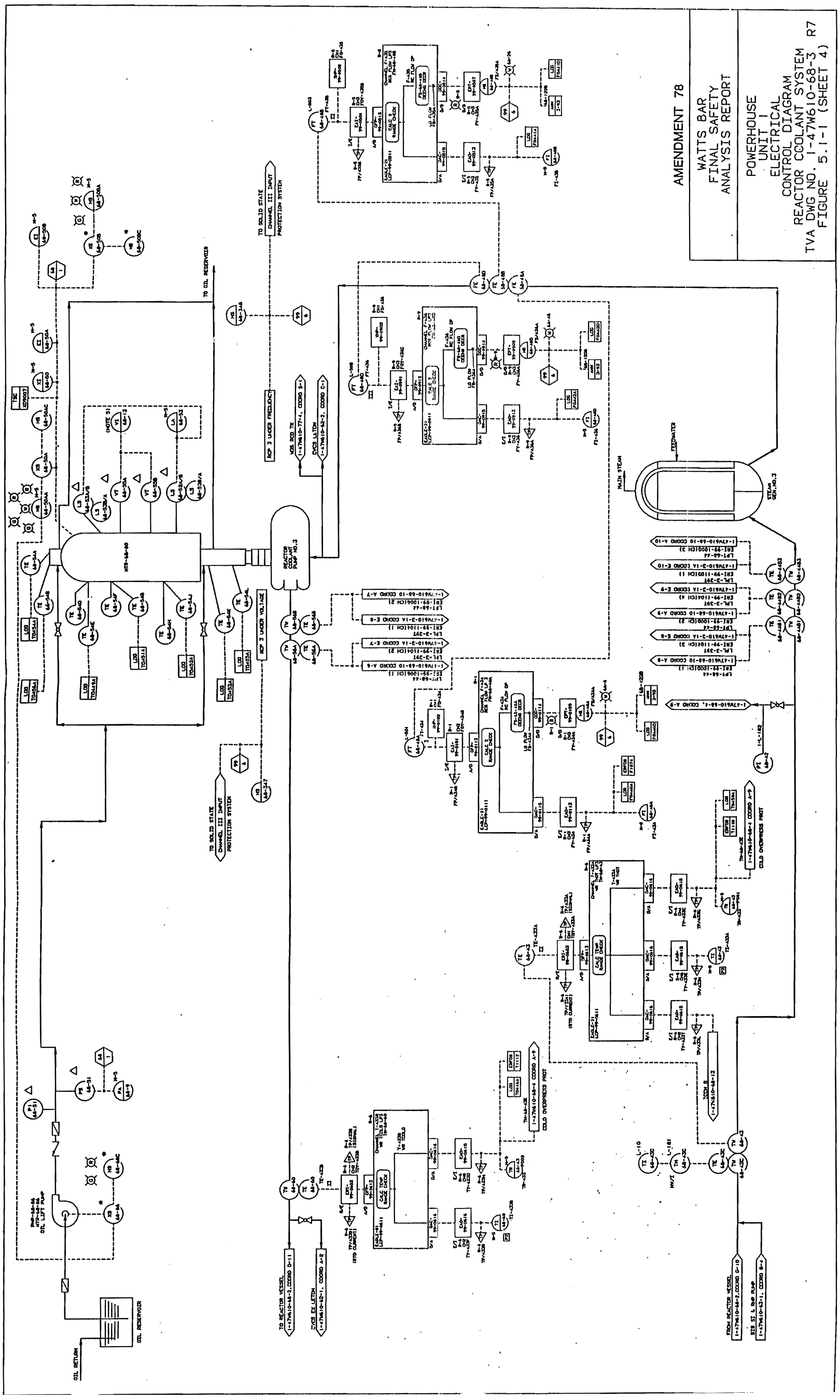

Figure 5.1-1 Powerhouse Unit 1 - Electrical Control Diagram - Reactor Coolant System (Sheet 4)

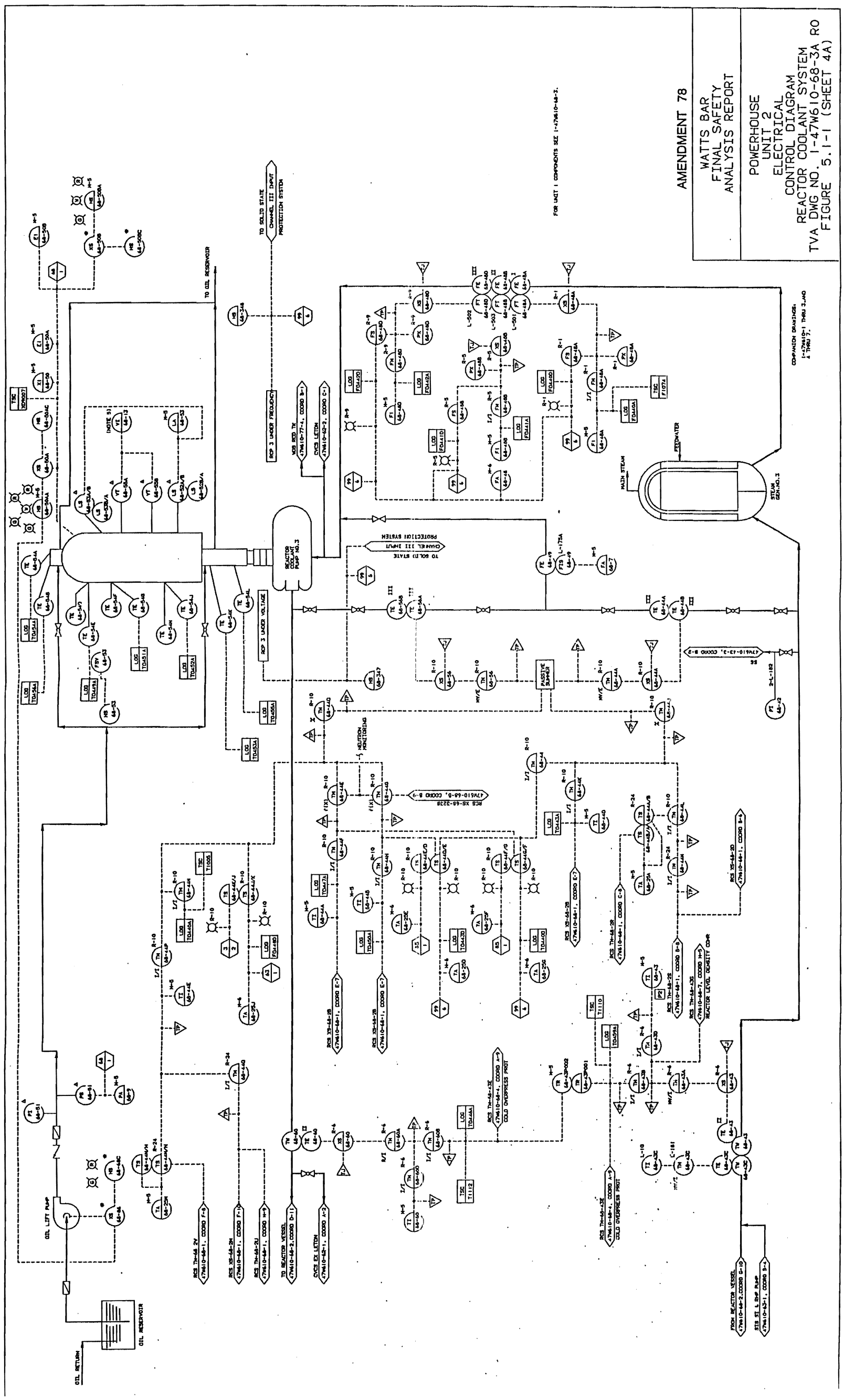

Figure 5.1-1 Powerhouse Unit 2- Electrical Control Diagram - Reactor Coolant System (Sheet 4a)

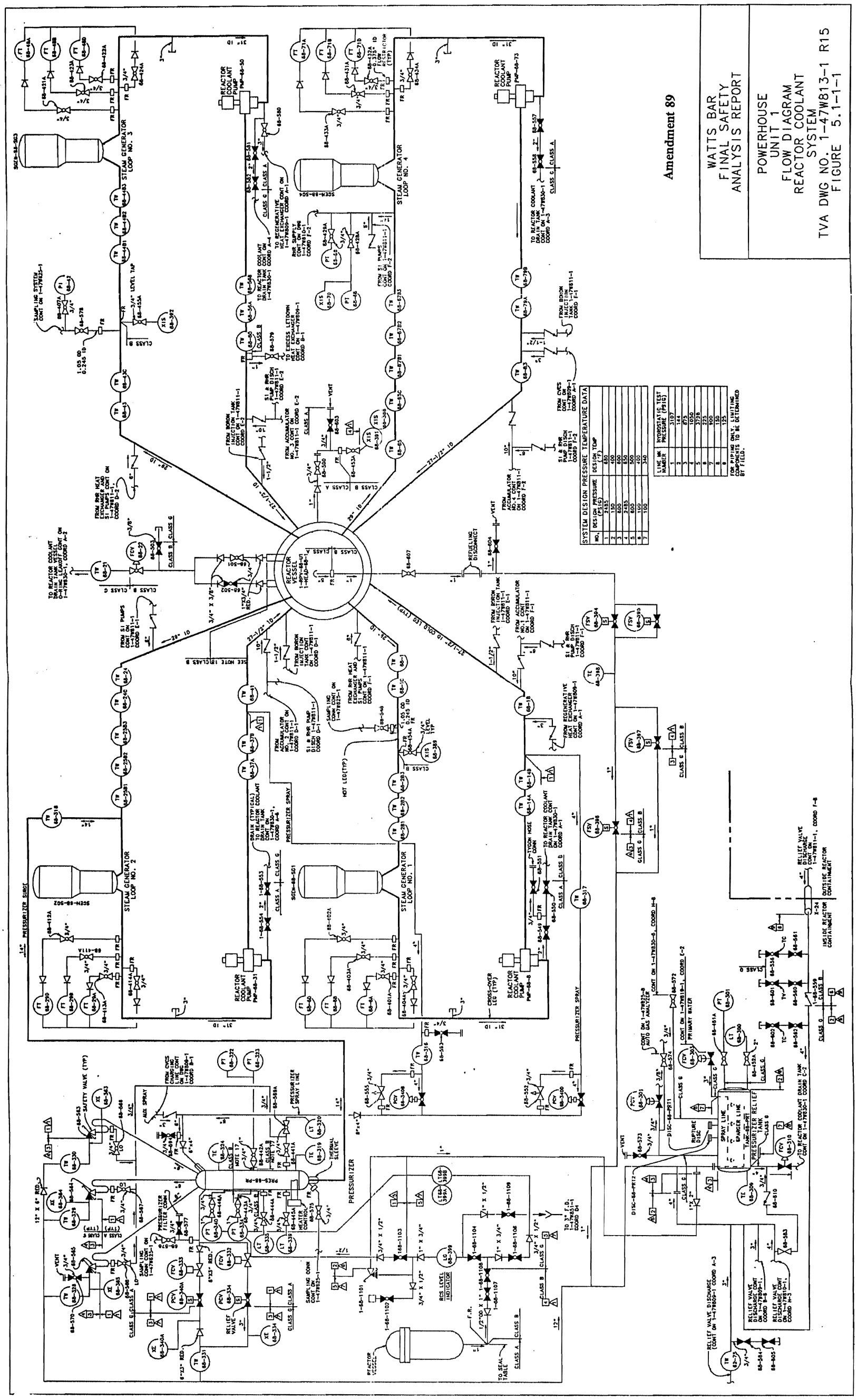

Figure 5.1-1-1 Powerhouse Unit 1 - Flow Diagram - Reactor Coolant System

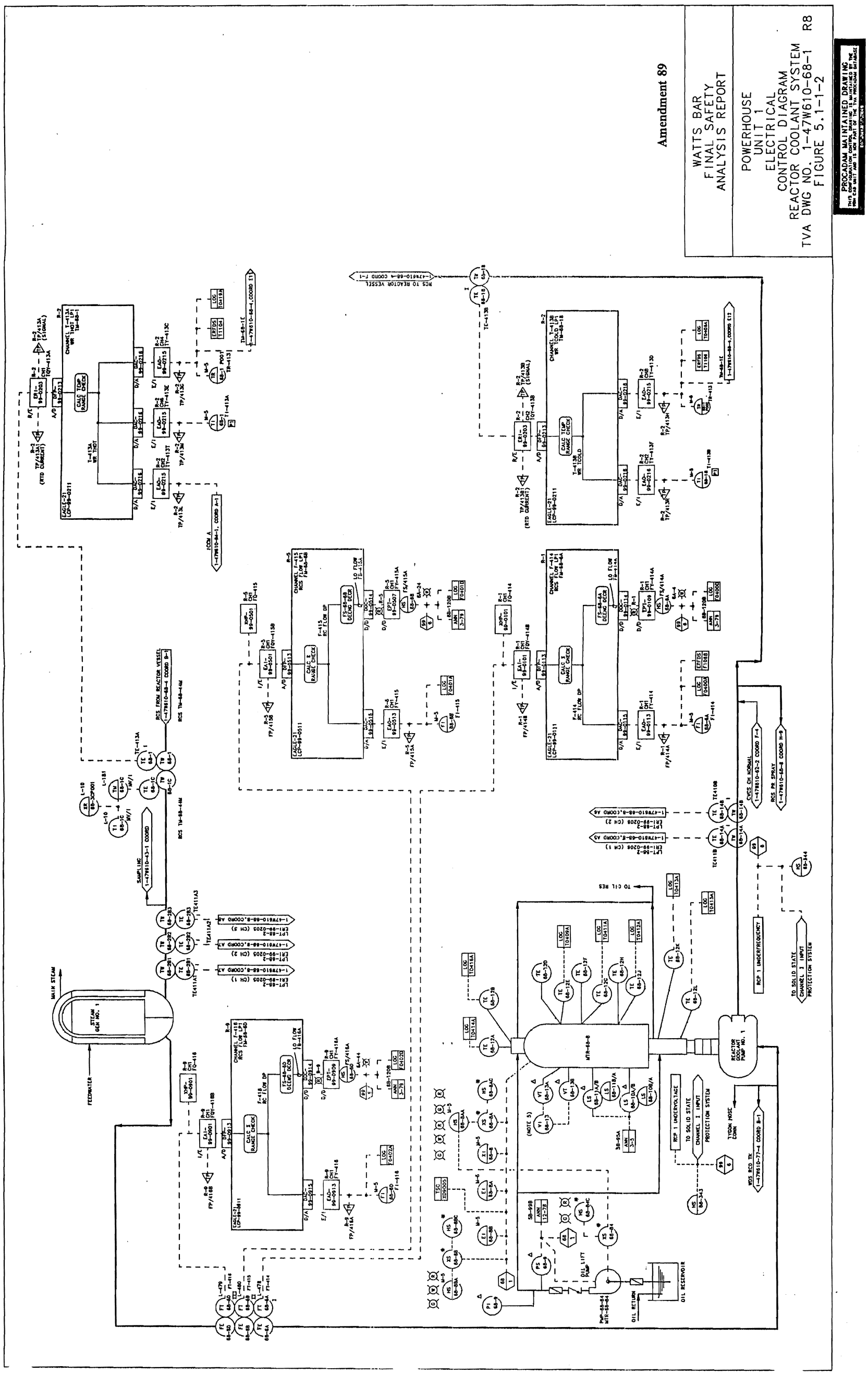

Figure 5.1-1-2 Powerhouse Unit 1 Electrical Control Diagram Reactor Coolant System

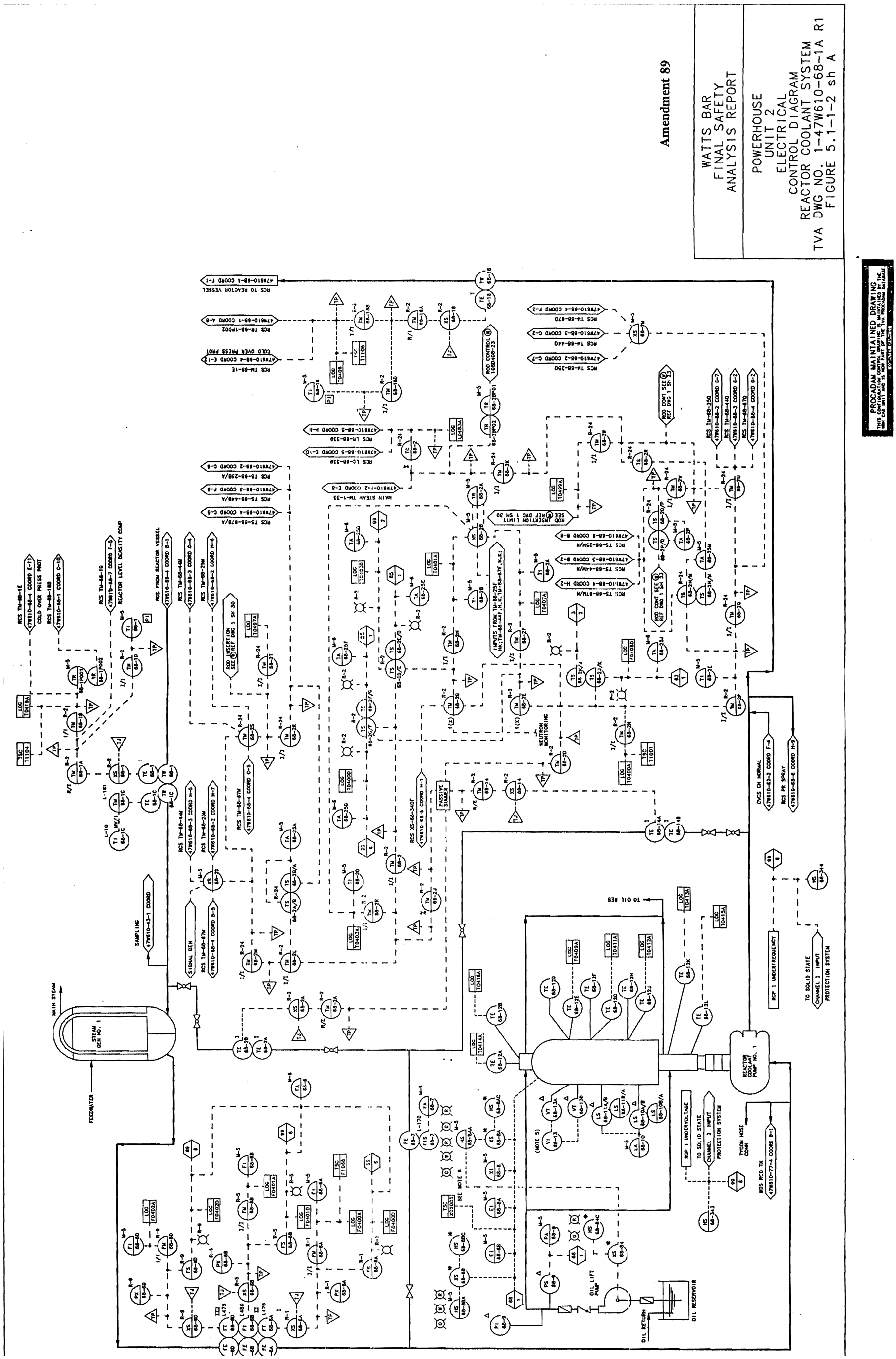

Figure 5.1-1-2 Powerhouse Unit 2 - Electrical Control Diagram - Reactor Coolant System (Sheet A)

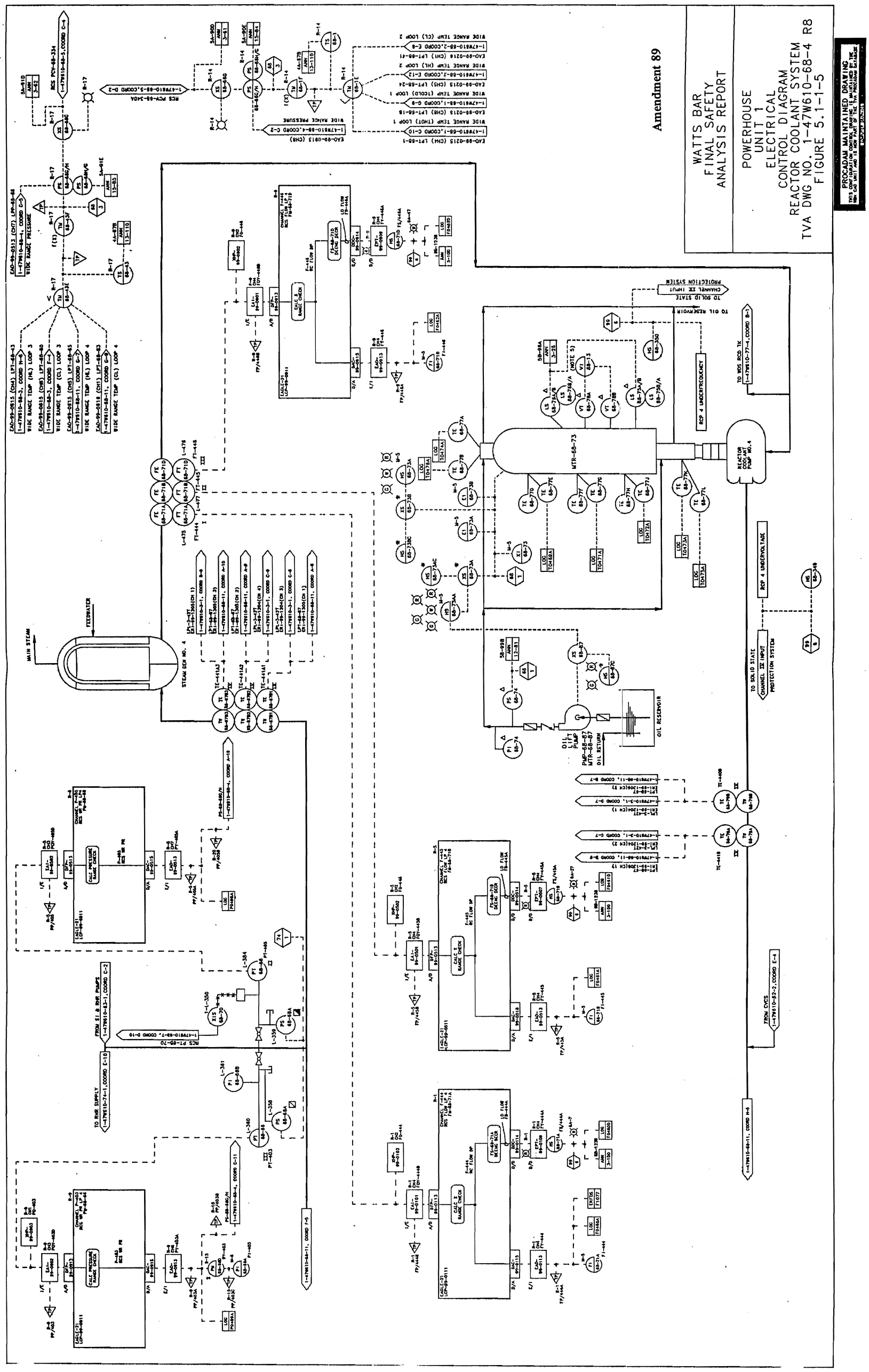

Figure 5.1-1-5 Powerhouse Unit 1 - Electrical Control Diagram - Reactor Coolant System

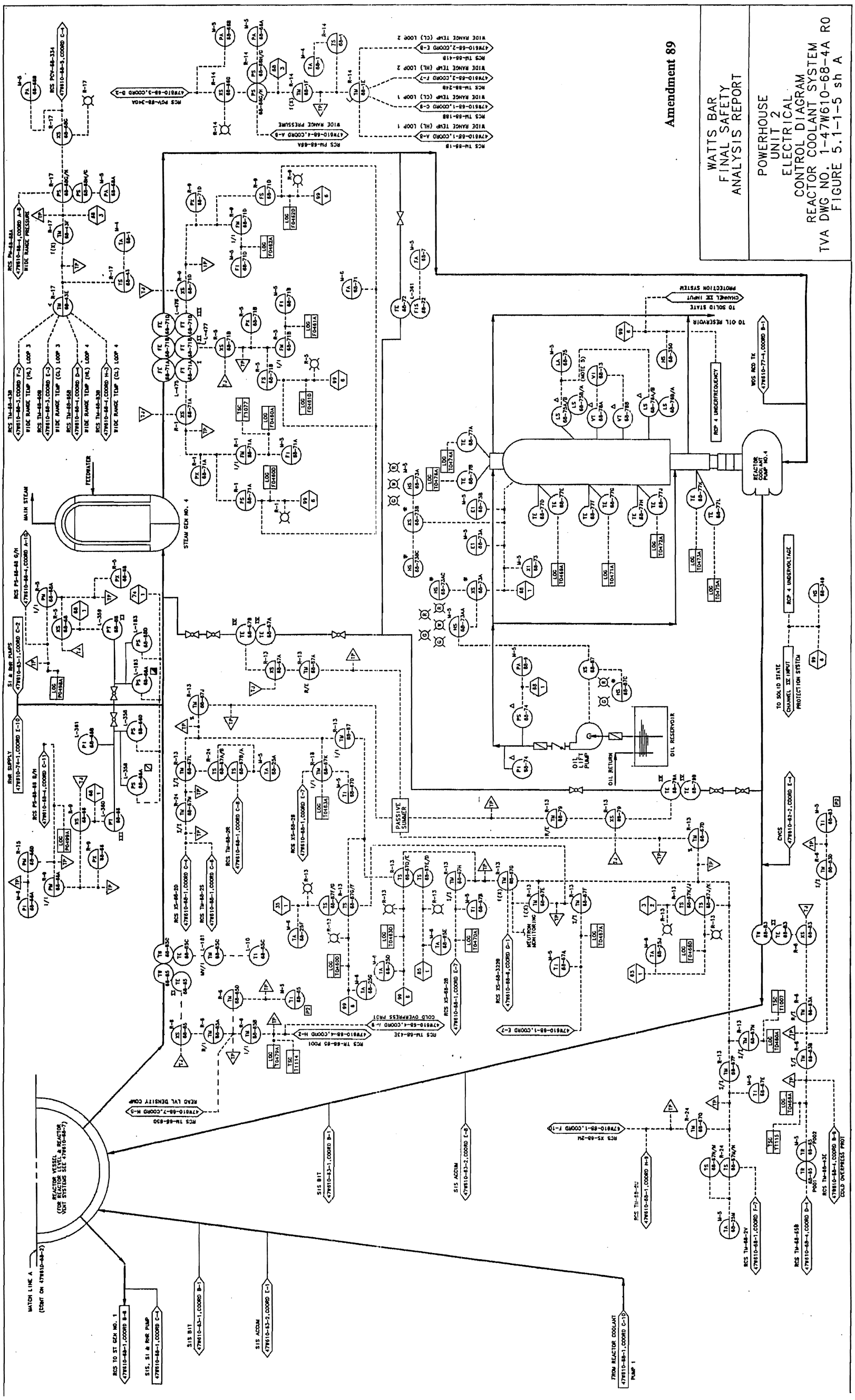

Figure 5.1-1-5 Powerhouse Unit 2 - Electrical Control Diagram - Reactor Coolant System (Sheet A)

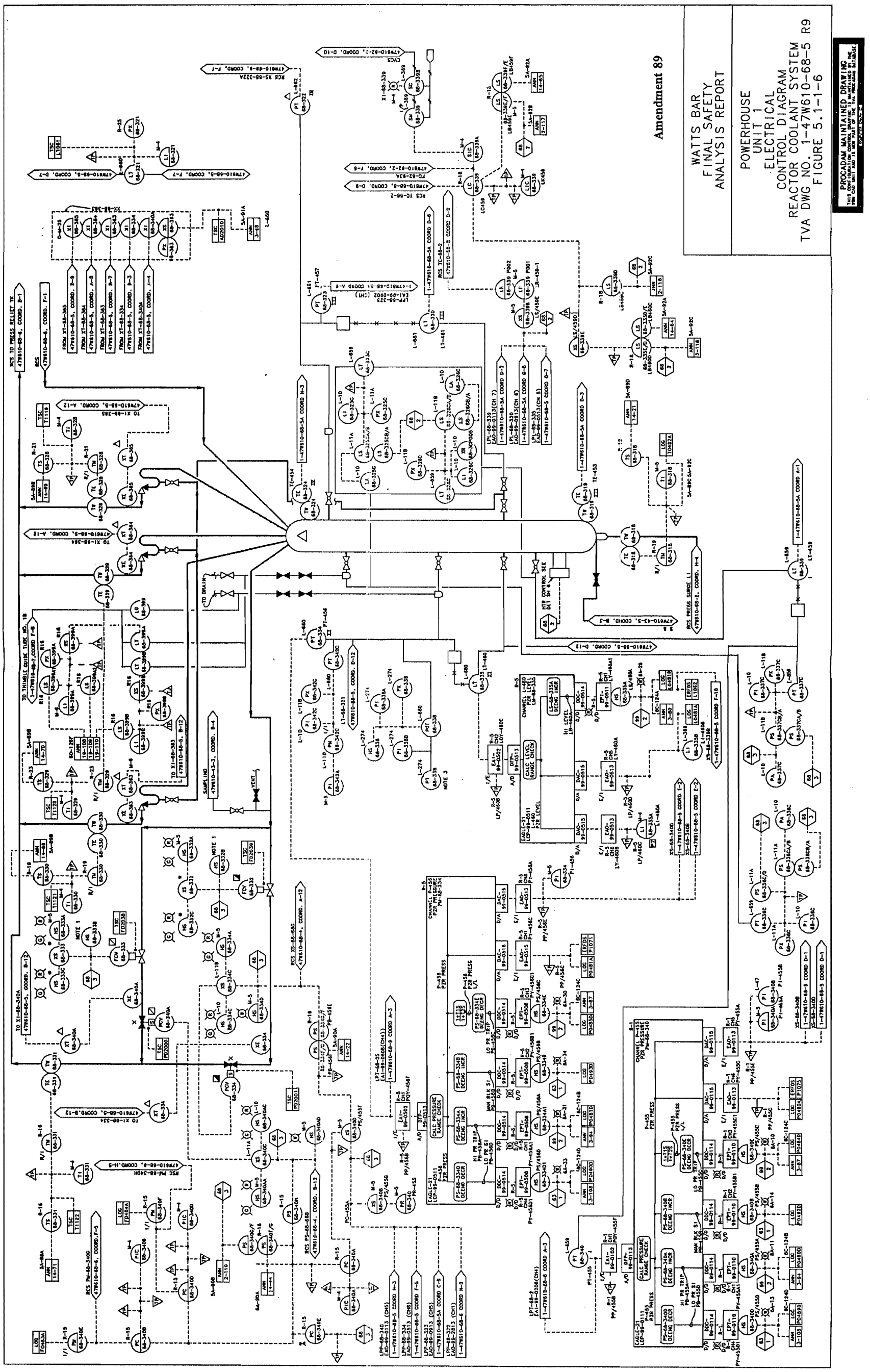

Figure 5.1-1-6 Powerhouse Unit 1 - Electrical Control Diagram - Reactor Coolant System

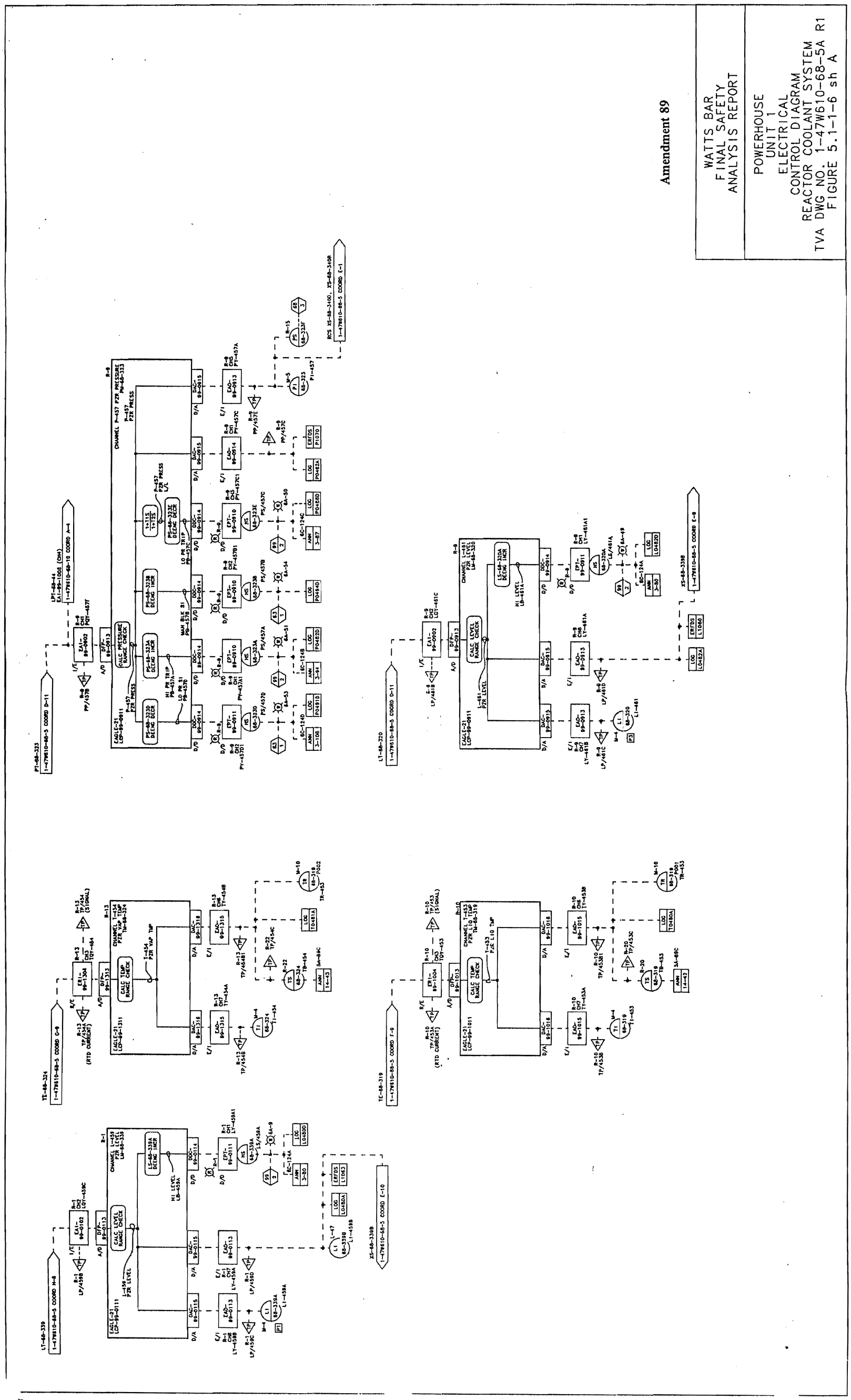

Figure 5.1-1-6 Powerhouse Unit 1- Electrical Control Diagram - Reactor Coolant System (Sheet A)

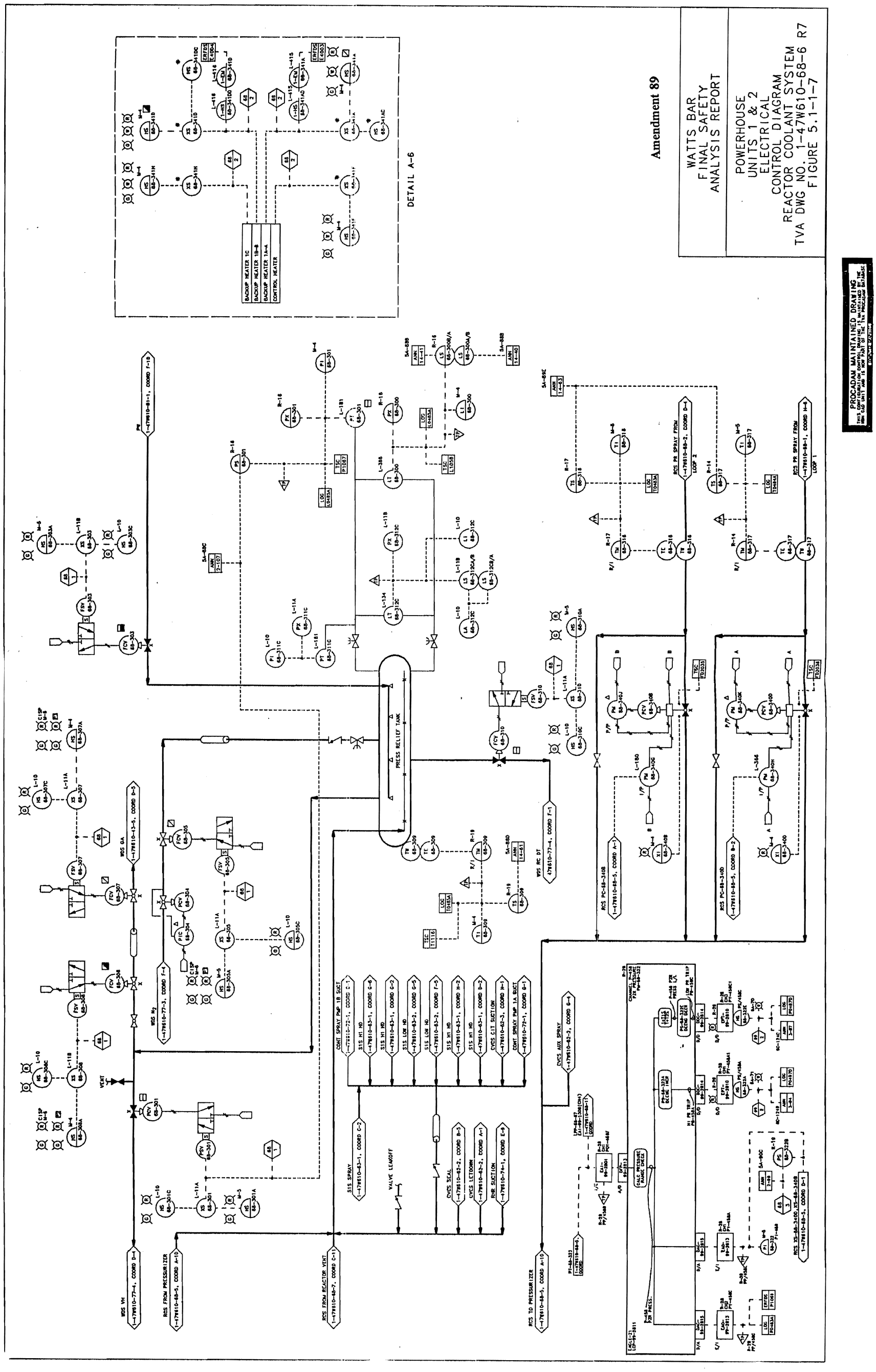

Figure 5.1-1-7 Powerhouse Unit 1 and 2 - Electrical Control Diagram - Reactor Coolant System

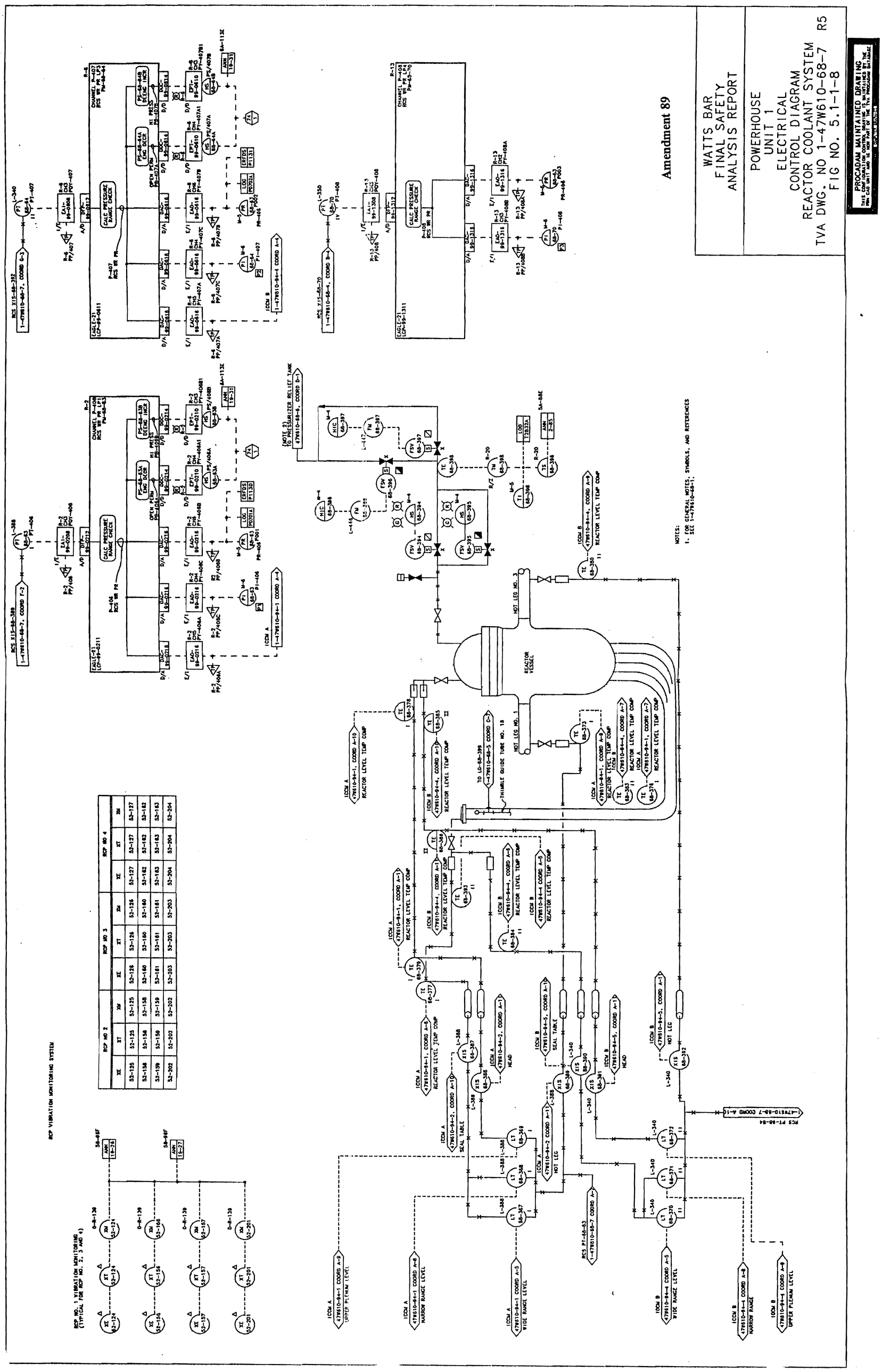

Figure 5.1-1-8 Powerhouse Unit 1- Electrical Control Diagram - Reactor Coolant System

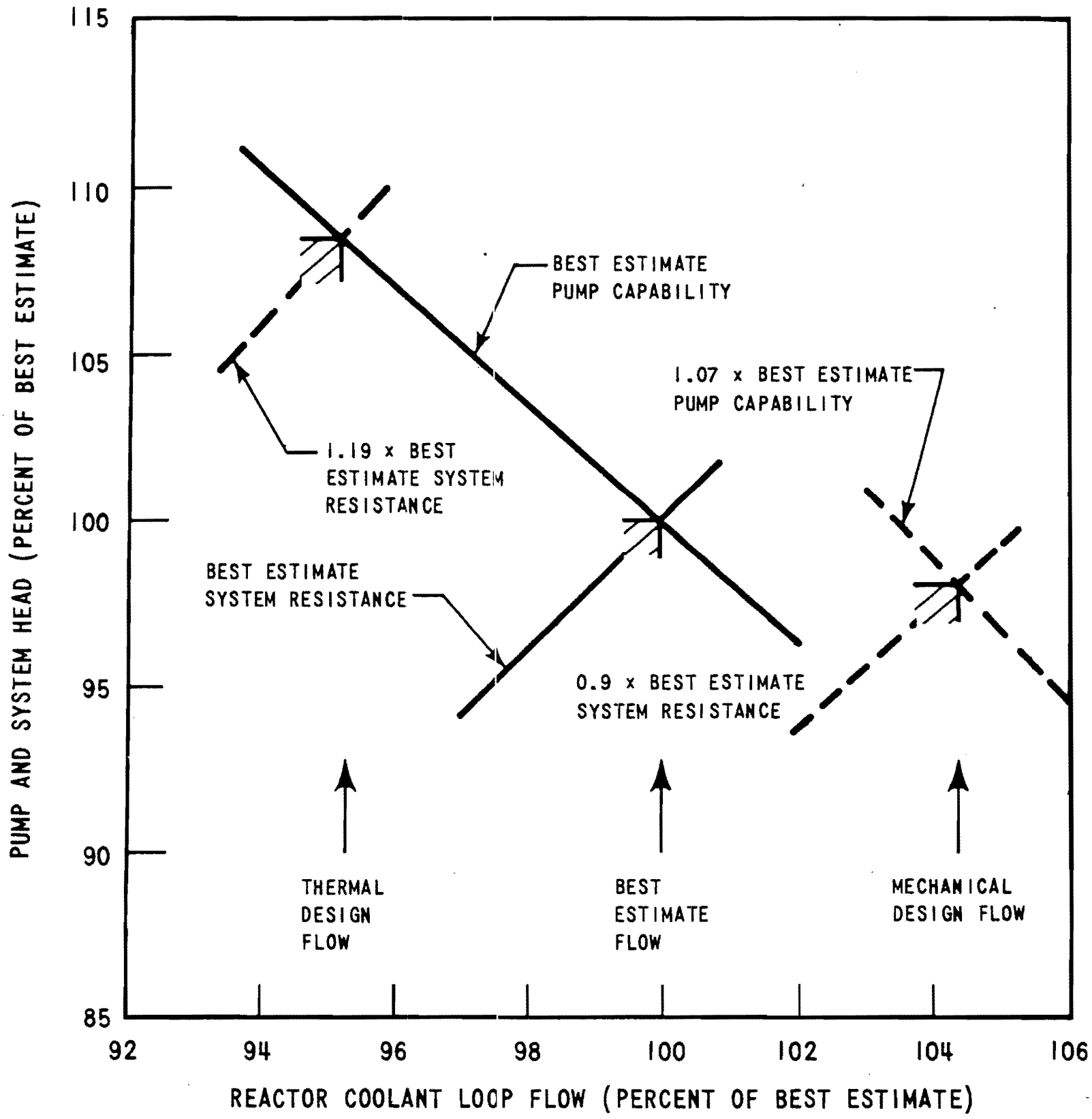

Figure 5.1-2. Pump Head - Flow Characteristics

Figure 5.1-2 Pump Head - Flow Characteristics

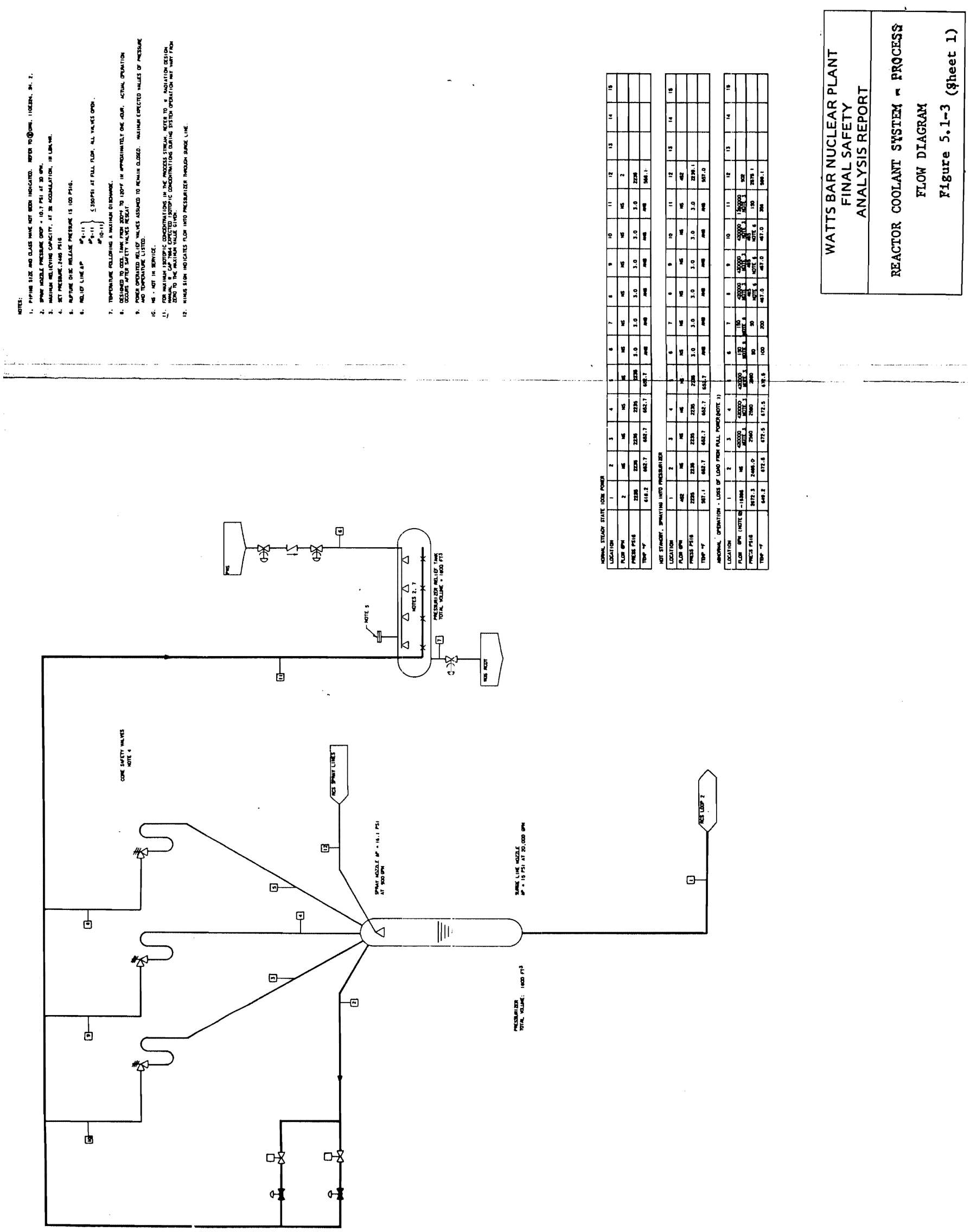

Figure 5.1-3 Reactor Coolant System - Process Flow Diagram (Sheet 1)

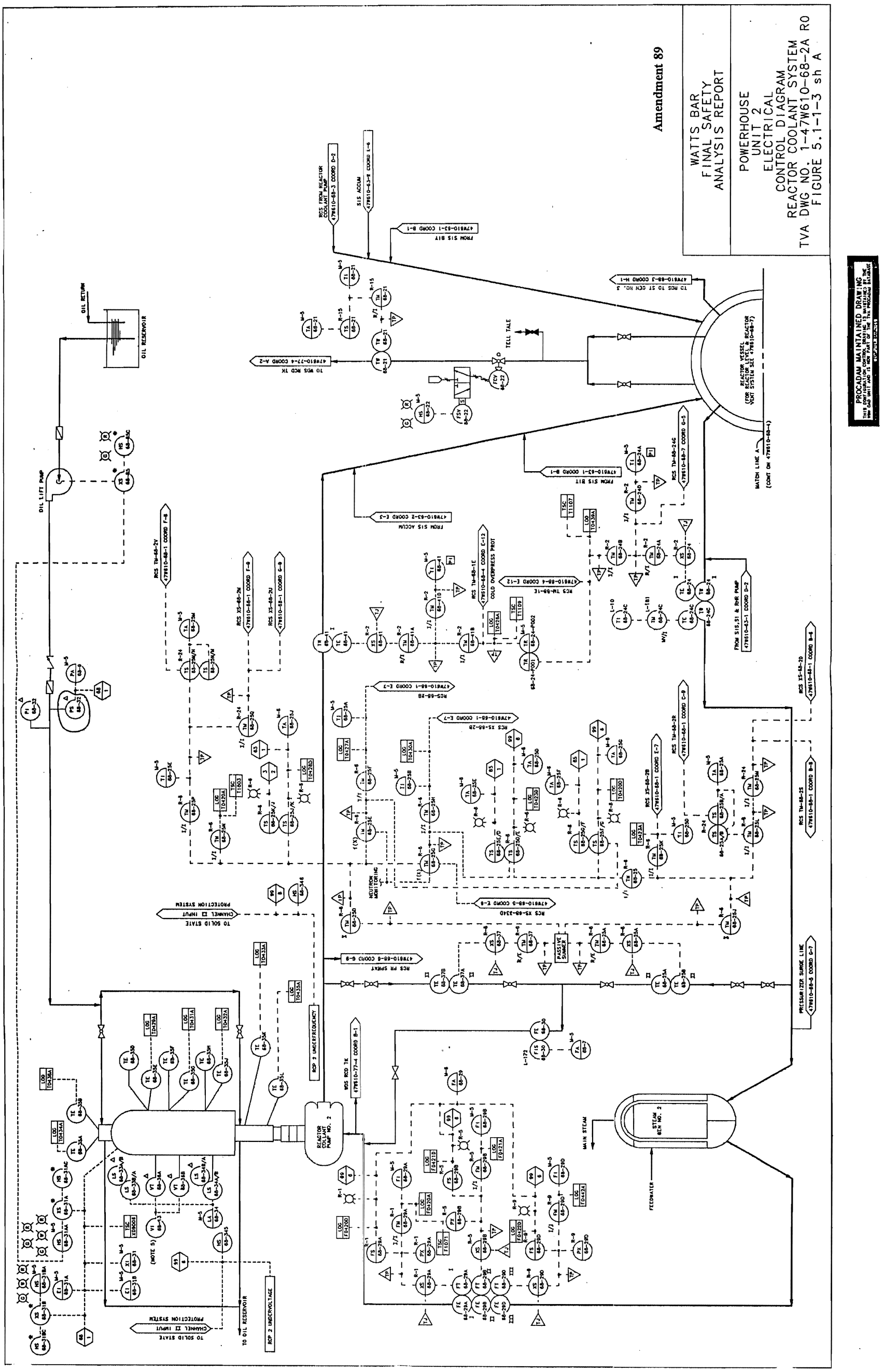

Figure 5.1-1-3 Powerhouse Unit 2 - Electrical Control Diagram - Reactor Coolant System (Sheet A)

NOTES:

1. PIPING SIZE AND CLASS HAVE NOT BEEN INDICATED. REFER TO (W) DWGS. 1 13E788 SH 1 AND 2 AND 1 13E807 FOR DETAILS.
2. ALL LOOPS IN OPERATION. LOOP 2 SHOWN AS TYPICAL.
3. MINUS SIGN INDICATES FLOW INTO PRESSURIZER.
4. VOLUMETRIC FLOW CORRECTED FOR DENSITY.
5. LOOP FLOWS ARE BASED ON THERMAL DESIGN DATA.
6. POWER-OPERATED RELIEF VALVES ASSUMED TO REMAIN CLOSED. MAXIMUM EXPECTED VALUES OF PRESSURE AND TEMPERATURE LISTED.
7. NS - NOT IN SERVICE.
8. FOR MAXIMUM ISOTROPIC CONCENTRATIONS IN THE PROCESS STREAM, REFER TO (W) RADIATION DESIGN MANUAL (W) CAP 7664. EXPECTED ISOTROPIC CONCENTRATIONS DURING SYSTEM OPERATION MAY VARY FROM ZERO TO THE MAXIMUM VALUE GIVEN.

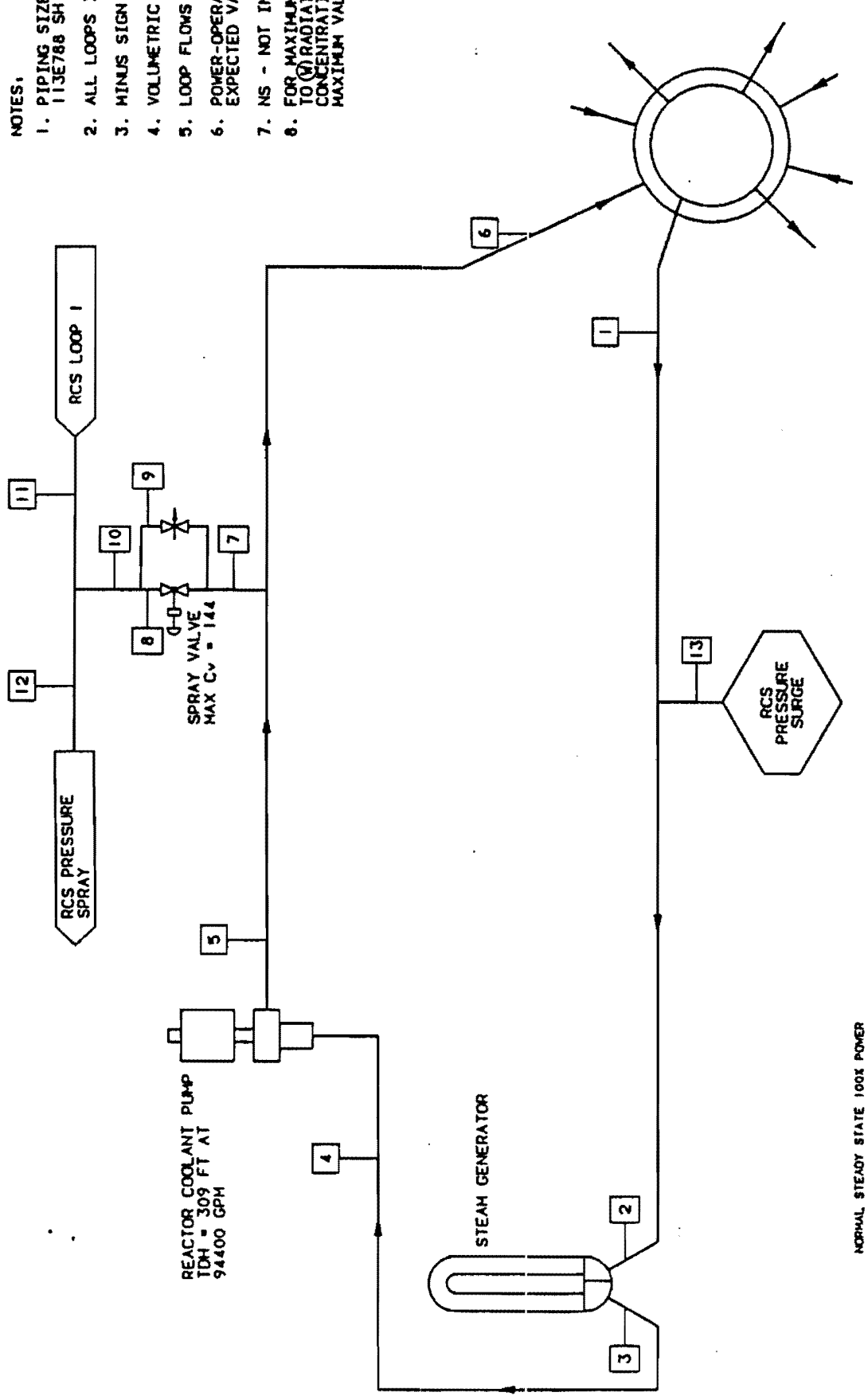

NORMAL STEADY STATE 100% POWER

LOCATION	1	2	3	4	5	6	7	8	9	10	11	12	13
FLOW GPM (SEE NOTE 4)	105.500	105.500	94.500	94.500	94.400	94.400	1	NS	1	1	1	2	2
PRESSURE PSIG	2235.0	2233 1	2199 0	2195 5	2293 8	2291.9	2306.8	2299.5	2299.5	2299.5	2299 5	2235 0	2235 0
TEMP °F	618 2	618 2	557 8	557 8	558 1	558 1	558.1	558 1	558.1	558.1	558.1	558.1	618 2

HOT STANDBY SPRAYING INTO PRESSURIZER

LOCATION	1	2	3	4	5	6	7	8	9	10	11	12	13
FLOW GPM (SEE NOTE 4)	94.500	94.500	94.500	94.500	94.400	94.400	451	450	1	451	1	452	452
PRESSURE PSIG	2235 0	2231 1	2199 0	2195 5	2293 8	2291 9	2306.8	2299.5	2299 5	2299 5	2299 5	2239.1	2239.0
TEMP °F	557 2	557 2	554 7	554.7	557 0	557 0	557 0	557 0	557 0	557 0	557 0	557 0	557 1

ABNORMAL OPERATION-LOSS OF LOAD FROM FULL POWER (NOTE 6)

LOCATION	1	2	3	4	5	6	7	8	9	10	11	12	13
FLOW GPM (SEE NOTE 4)	126.100	104.700	94.600	94.600	94.400	94.400	450	450	1	451	451	902	-19.396
PRESSURE PSIG	2672 3	2670 5	2638 5	2635.2	2726 0	2724 2	2738 3	2731 4	2731 4	2731 4	2731 4	2579 1	2672 3
TEMP °F	649 2	649 2	598 8	598 8	599 1	599 1	599 1	599 1	599 1	599 1	599 1	599 1	649 2

HEATUP AT 400°F (4 PUMPS IN OPERATION)

LOCATION	1	2	3	4	5	6	7	8	9	10	11	12	13
FLOW GPM (SEE NOTE 4)	94.400	94.400	94.400	94.400	94.400	94.400	1	NS	1	1	1	2	2
PRESSURE PSIG	985 0	982 8	943 2	939 2	1053 4	1051 2	1068 6	1060 2	1060 2	1060 2	1060 2	1060 2	985 0
TEMP °F	400 0	400 0	400 0	400 0	400 1	400 1	400 1	400 1	400 1	400 1	400 1	400 1	400 0

AMENDMENT 70

WATTS BAR NUCLEAR PLANT
FINAL SAFETY
ANALYSIS REPORT

REACTOR COOLANT SYSTEM -
PROCESS FLOW DIAGRAM
(SHEET 2)

Figure 5.1-3

WBN MI5755/20 GWJ

Figure 5.1-3 Reactor Coolant System - Process Flow Diagram (Sheet 2)

nn

5.2 INTEGRITY OF REACTOR COOLANT PRESSURE BOUNDARY

This section discusses measures employed to provide and maintain the integrity of the Reactor Coolant Pressure Boundary (RCPB) for the plant design lifetime. In this context, the RCPB is as defined in Section 50.2 of 10 CFR Part 50. In that definition, the RCPB means all those pressure-containing components which are:

(1) Part of the reactor coolant system, or

(2) Connected to the reactor coolant system, up to and including any and all of the following:

(a) The outermost containment isolation valve in system piping which penetrates primary reactor containment.

(b) The second of two valves normally closed during normal reactor operation in system piping which does not penetrate primary reactor containment.

(c) The reactor coolant system safety and relief valves.

Since other sections of this report already describe the components of these auxiliary fluid systems in detail, the discussion in this section is limited to the components of the RCS as defined in Section 5.1, unless otherwise noted.

For additional information on the components which are part of the RCPB (as defined in 10 CFR 50.2) and which are not described in this section, refer to the following sections:

Section 6.3 - For discussions of the RCPB components which are part of emergency core cooling system.

Section 9.3.4 - For discussions of the RCPB components which are part of the chemical and volume control system.

Section 3.9 - For discussions of the design loadings, stress limits and analyses applied to ASME Code Class 2 and 3 components.

The phrase, Reactor Coolant System, (RCS), as used in this section is as defined in Section 5.1. When the term RCPB is used in this section, its definition is that of Section 50.2 of 10 CFR Part 50.

The components which are within the Reactor Building and meet the following requirements, may be classified as TVA Class G:

(1) Piping and associated components in the RCPB which penetrate containment excluding the actual penetration and its associated components.

(2) Piping and associated components which perform no primary safety function.

(3) Piping and associated components which are isolated by a normally closed valve off a line in the RCPB that meets the exclusion requirements of 10 CFR 50.55a (c)(1) and (c)(2); for example, the ECCS check valve leak test lines.

5.2.1 Design of Reactor Coolant Pressure Boundary Components

5.2.1.1 Performance Objectives

The performance objectives of the RCS are described in Section 5.1. The equipment code and classification list for the components within the RCS are given in Table 5.2-1.

The RCS in conjunction with the reactor control and protection systems is designed to maintain the reactor coolant at conditions of temperature, pressure and flow adequate to protect the core from damage. The design requirement for safety is to prevent conditions of high power, high reactor coolant temperature or low reactor coolant pressure or combinations of these which could result in a departure from nucleate boiling ratio (DNBR) less than 1.3.

The RCS is designed to provide controlled changes in the boric acid concentration and the reactor coolant temperature. The reactor coolant is the core moderator, reflector, and solvent for the chemical shim. As a result, changes in the coolant temperature or boric acid concentration affect the reactivity level in the core.

Whenever the boron concentration of the RCS is reduced, plant operation will be such that good mixing is provided in order to ensure that the boron concentration is maintained uniformly throughout the RCS.

The following design bases have been selected to ensure that the uniform RCS boron concentration and temperature will be maintained:

(1) Coolant flow is provided by either a reactor coolant pump or a residual heat removal pump to ensure uniform mixing whenever the boron concentration is decreased.

(2) The design arrangement of the RCS eliminates dead ended sections and other areas of low coolant flow in which non-homogeneities in coolant temperature or boron concentration could develop.

(3) The RCS is designed to operate within the operating parameters, particularly the coolant temperature change limitations.

During plant cooldown, the boron concentration in the RCS is increased to the cold shutdown concentration, and the concentration is verified by sampling.

It is therefore concluded that the temperature changes imposed on the RCS during its normal modes of operation do not cause any abnormal or unacceptable reactivity changes.

Also, the design of the RCS is such that the distribution of flow around the system is not subject to the degree of variation which would be required to produce non-homogeneities in coolant temperature or boron concentration as a result of areas of low coolant flow rate. An exception to this is the pressurizer but for the reasons discussed above, it is of no concern. Operation with one reactor coolant pump inoperable is possible under certain conditions and in this case there would be backflow in the associated loop, even though the pump itself is prevented from rotating backwards by its antirotation device. The backflow through the loop would cause departure from the normal temperatures distribution around the loop but would maintain the boron concentration in the loop equal to that in the remainder of the RCS.

The range of coolant temperature variation during normal operation is limited and the associated reactivity change is well within the capability of the rod control group movement.

The RCS provides for heat transfer from the reactor to the steam generators under conditions of forced circulation flow and natural circulation flow. The heat transfer capabilities of the RCS are analyzed in Chapter 15 for various transients.

The heat transfer capability of the steam generators is sufficient to transfer to the steam and power conversion system the heat generated during normal operation, and during the initial phase of plant cooldown under natural circulation conditions.

During the second phase of plant cooldown and during cold shutdown and refueling, the heat exchangers of the residual heat removal system are employed. Their capability is discussed in Section 5.5.7.

The pumps of the RCS assure heat transfer by forced circulation flow. Design flow rates are discussed in conjunction with the reactor coolant pump description in Section 5.5.1.

Initial RCS tests are performed to determine the total delivery capability of the reactor coolant pumps. Thus, it is confirmed prior to plant operation that adequate circulation is provided by the RCS.

To assure a heat sink for the reactor under conditions of natural circulation flow, the steam generators are at a higher elevation than the reactor. In the design of the steam generators consideration is given to provide adequate tube area to ensure that the residual heat removal rate is achieved with natural circulation flow.

5.2.1.2 Design Parameters

The design pressure for the RCS is 2485 psig, except for the pressurizer relief line from the safety valves to the pressurizer relief tank, which is 600 psig, and the pressurizer relief tank, which is 100 psig. For components with design pressures of 2485 psig the normal operating pressure is 2235 psig. The design temperature for the RCS is 650°F except for the pressurizer and its surge line, spray line, and relief and safety valve inlet lines which are designed for 680°F, and the pressurizer relief line from the safety valve to the pressurizer relief tank, which is designed for 600°F.

Design parameters for the individual components in the RCS are given in the respective component description discussions of Section 5.5. Component hydrostatic testing is accomplished in accordance with the requirements of the ASME Boiler and Pressure Vessel Code, Section III. System hydrostatic testing is discussed in Section 5.2.1.5.

5.2.1.3 Compliance with 10 CFR Part 50, Section 50.55a

RCS components are designed and fabricated in accordance with the rules of 10 CFR 50, Section 50.55a, "Codes and Standards". At this time, there are no known cases wherein conformance to the rules of Section 50.55a would result in hardships or unusual difficulties. The actual addenda of the ASME Code applied are presented in Table 5.2-1.

5.2.1.4 Applicable Code Cases

The following is a listing of Class 1 code cases used for both units of the Watts Bar Nuclear Plant. This list includes those code cases listed in Table 5.2-8.

Class 1 Code Cases

Equipment	Unit #1	Unit #2
Closure studs for reactor vessel	1605	1605
Steam generators	1355 1484 1493-1 1593-1	1355 1484 1493-1
Pressurizer	1491-1	1528
Drive mechanism housings, part-length	1337-5	1337-5
Reactor coolant piping	1423-1	1423-1
Check valves and gate valves	1553	1553

5.2.1.5 Design Transients

The following five ASME operating conditions are considered in the design of the RCS.

(1) Normal Conditions

Any condition in the course of startup, operation in the design power range, hot standby and system shutdown, other than upset, emergency, faulted or testing conditions.

(2) Upset Conditions (Incidents of Moderate Frequency)

Any deviations from normal conditions anticipated to occur often enough that design should include a capability to withstand the conditions without operational impairment. The upset conditions include those transients which result from any single operator error or control malfunction, transients caused by a fault in a system component requiring its isolation from the system and transients due to loss of load or power. Upset conditions include any abnormal incidents not resulting in a forced outage and also forced outages for which the corrective action does not include any repair of mechanical damage. The estimated duration of an upset condition is included in the design specifications.

(3) Emergency Conditions (Infrequent Incidents)

Those deviations from normal conditions which require shutdown for correction of the conditions or repair of damage in the system. The conditions have a low probability of occurrence but are included to provide assurance that no gross loss of structural integrity will result as a concomitant effect of any damage developed in the system. The total number of postulated occurrences for such events shall not cause more than twenty-five stress cycles having an S_a value greater than that for 10^6 cycles from the applicable fatigue design curves of the ASME Code Section III.

(4) Faulted Conditions (Limiting Faults)

Those combinations of conditions associated with extremely low probability, postulated events whose consequences are such that the integrity and operability of the nuclear energy system may be impaired to the extent that consideration of public health and safety are involved. Such considerations require compliance with safety criteria as may be specified by jurisdictional authorities.

(5) Testing Conditions

Testing conditions are those pressure overload tests including hydrostatic tests, pneumatic tests, and leak tests specified. Other types of tests are classified under Normal, Upset, Emergency or Faulted Conditions.

To provide the necessary high degree of integrity for the equipment in the RCS the transient conditions selected for equipment fatigue evaluation are based upon a conservative estimate of the magnitude and frequency of the temperature and pressure transients resulting from various operating conditions in the plant. To a large extent, the specific transient operating condition to be considered for equipment fatigue analyses is based upon engineering judgment and experience. The transients selected are representative of operating conditions which prudently should be considered to occur during plant operation and are sufficiently severe or frequent to be of possible significance to component cyclic behavior. The transients selected may be regarded as a conservative representation of transients which, used as a basis for component fatigue evaluation, provide confidence that the component is appropriate for its application over the design life of the plant.

The following design conditions are given in the Equipment Specifications for RCS components.

The design transients and the number of cycles of each that is used for fatigue evaluations are shown in Table 5.2-2 and Table 5.2-3. Table 5.2-3 outlines transients on the steam generator and pressurizer only. In accordance with the ASME Boiler and Pressure Vessel Code, Emergency and Faulted Conditions are not included in fatigue evaluations.

Normal Conditions

The following primary system transients are considered Normal Conditions:

(1) Heatup and Cooldown at 100°F Per Hour

The design heatup and cooldown cases are conservatively represented by continuous operations performed at a uniform temperature rate of 100°F per hour. (These operations can take place at lower rates approaching the minimum of 0°F per hour.)

For these cases, the heatup occurs from ambient to the no-load temperature and pressure condition and the cooldown represents the reverse situation. In actual practice, the rate of temperature change of 100°F per hour will not be attained because of other limitations such as:

(a) Material ductility considerations which establish maximum permissible temperature rates of change, as a function of plant pressure and temperature, which are below the design rate of 100°F per hour. See Pressure and Temperature Limits Report.

(b) Slower initial heatup rates when using pump energy only.

(c) Interruptions in the heatup and cooldown cycles due to such factors as drawing a pressurizer steam bubble, rod withdrawal, sampling, water chemistry and gas adjustments.

(2) Unit Loading and Unloading at 5% of Full Power Per Minute

The unit loading and unloading cases are conservatively represented by a continuous and uniform ramp power change of 5% per minute between 15% load and full load. This load swing is the maximum possible consistent with operation under automatic reactor control. The reactor temperature will vary with load as prescribed by the reactor control system.

(3) Step Load Increase and Decrease of 10% of Full Power

The ±10% step change in load demand is a transient which is assumed to be a change in turbine control valve opening due to disturbances in the electrical network into which the plant output is tied. The reactor control system is designed to restore plant equilibrium without reactor trip following a ±10% step change in turbine load demand initiated from nuclear plant equilibrium conditions in the range between 15% and 100% full load, the power range for automatic reactor control. In effect, during load change conditions, the reactor control system attempts to match turbine and reactor outputs in such a manner that peak reactor coolant temperature is minimized and reactor coolant temperature is restored to its programmed setpoint at a sufficiently slow rate to prevent excessive pressurizer pressure decrease.

Following a step decrease in turbine load, the secondary side steam pressure and temperature initially increase since the decrease in nuclear power lags behind the step decrease in turbine load. During the same increment of time, the RCS average temperature and pressurizer pressure also initially increase. Because of the power mismatch between the turbine and reactor and the increase in reactor coolant temperature, the control system automatically inserts the control rods to reduce core power. With the load decrease, the reactor coolant temperature will ultimately be reduced from its peak value to a value below its initial equilibrium value at the inception of the transient. The reactor coolant average temperature setpoint change is made as a function of turbine-generator load as determined by first stage turbine pressure measurement. The pressurizer pressure will also decrease from its peak pressure value and follow the reactor coolant decreasing temperature trend. At some point during the decreasing pressure transient, the saturated water in the pressurizer begins to flash which reduces the rate of pressure decrease. Subsequently the pressurizer heaters come on to restore the plant pressure to its normal value.

Following a step increase in turbine load, the reverse situation occurs, i.e., the secondary side steam pressure and temperature initially decrease and the reactor coolant average temperature and pressure initially decrease. The control system automatically withdraws the control rods to increase core power. The decreasing pressure transient is reversed by actuation of the pressurizer heaters and eventually the system pressure is restored to its normal value. The reactor coolant average temperature will be raised to a value above its initial equilibrium value at the beginning of the transient.

(4) Large Step Load Decrease With Steam Dump

This transient applies to a step decrease in turbine load from full power of such magnitude that the resultant rapid increase in reactor coolant average temperature and secondary side steam pressure and temperature automatically initiates a secondary side steam dump system that prevents a reactor shutdown or lifting of main steam safety valves. Thus, when a plant is designed to accept a step decrease of 95% from full power, it signifies that a steam dump system provides a heat sink to accept 85% of the turbine load. The remaining 10% of the total step change is assumed by the rod control system. If a steam dump system were not provided to cope with this transient, there would be such a large mismatch between what the turbine is demanding and what the reactor is furnishing that a reactor trip and lifting of steam generator safety valves would occur.

Although WBNP has been designed for a 50% step change, the transient for the 95% step load decrease is considered since it represents a more severe condition.

(5) Steady State Fluctuations

It is assumed that the reactor coolant temperature and pressure at any point in the system vary around the nominal (steady state) value. For design purposes two cases are considered:

(a) Initial Fluctuations - These are due to control rod cycling during the first 20 full power months of reactor operation. Temperature is assumed to vary $\pm$3°F and pressure by $\pm$25 psi, once during each 2 minute period. The total number of occurrences is limited to 1.5×10^5. These fluctuations are assumed to occur consecutively, and not simultaneously with the random fluctuations.

(b) Random Fluctuations - Temperature is assumed to vary by $\pm$0.5°F and pressure by $\pm$6 psi, once every 6 minutes. With a 6 minute period, the total number of occurrences during the plant design life does not exceed 3.0×10^6.

Upset Conditions

The following primary system transients are considered Upset Conditions:

(1) Loss of Load (Without Immediate Reactor Trip)

This transient applies to a step decrease in turbine load from full power without immediately initiating at reactor trip and represents the most severe pressure transient on the RCS under Upset Conditions. The reactor eventually trips as a consequence of a high pressurizer level trip initiated by the Reactor Protection System (RPS). Since redundant means of tripping the

reactor are provided as a part of the RPS, transients of this nature are not expected, but are included to ensure a conservative design.

(2) Loss of Power

This transient applies to the loss of offsite electrical power to the station, followed by reactor and turbine trips. Under these circumstances, the reactor coolant pumps are de-energized and following coastdown of the reactor coolant pumps, natural circulation builds up in the system to some equilibrium value. This condition permits removal of core residual heat through the steam generators which at this time are receiving feedwater from the AFS operating from diesel generator power. Steam is removed for reactor cooldown through atmospheric relief valves provided for this purpose.

(3) Partial Loss of Flow

This transient applies to a partial loss of flow from full power in which a reactor coolant pump is tripped out of service as the result of a loss of power to that pump. The consequences of such an accident are a reactor and turbine trip, on low reactor coolant flow, followed by automatic opening of the steam dump system and flow reversal in the affected loop. The flow reversal causes reactor coolant at cold leg temperature to pass through the steam generator and be cooled still further. This cooler water then flows through the hot leg piping and enters the reactor vessel outlet nozzles. The net result of the flow reversal is a sizable reduction in the hot leg coolant temperature of the affected loop.

(4) Reactor Trip From Full Power

A reactor trip from full power may occur from a variety of causes resulting in temperature and pressure transients in the RCS and in the secondary side of the steam generator. This is the result of continued heat transfer from the reactor coolant in the steam generator. The transient continues until the reactor coolant and steam generator secondary side temperatures are in equilibrium at zero power conditions. A continued supply of feedwater and controlled dumping of steam remove the core residual heat and prevent the steam generator safety valves from lifting. The reactor coolant temperature and pressure undergo a rapid decrease from full power values as the RPS causes the control rods to move into the core.

(5) Reactor Trip with Cooldown and ECCS Actuation

A limited number of reactor trips may be accompanied by unusually rapid RCS cooldown caused by excessive feedwater flow. For design purposes, it is assumed that the cooldown continues until the emergency core cooling system is actuated and the feedwater flow is isolated. The RCS is eventually repressurized by continued operation of the charging pump.

(6) Inadvertent Reactor Coolant System Depressurization

Several events can be postulated as occurring during normal plant operation which will cause rapid depressurization of the RCS. These include:

(a) Actuation of a single pressurizer safety valve.

(b) Inadvertent opening of one pressurizer power operated relief valve due either to equipment malfunction or operator error.

(c) Malfunction of a single pressurizer pressure controller causing one power operated relief valve and two pressurizer spray valves to open.

(d) Inadvertent opening of one pressurizer spray valve, due either to equipment malfunction or operator error.

(e) Inadvertent auxiliary spray.

Of these events, the pressurizer safety valve actuation causes the most severe transients, and is used as an "umbrella" case to conservatively represent the reactor coolant pressure and temperature variations arising from any of them.

When a pressurizer safety valve opens, and remains open, the system rapidly depressurizes, and the reactor trips. The RCS pressure decreases to the saturation pressure of the reactor coolant, and boiloff of the reactor coolant through the pressurizer and open safety valves continues as the RCS reaches equilibrium conditions with the ECCS in operation.

For occurrences involving the power operated relief valves or pressurizer spray the transient is terminated by operator action. These effects are completed within approximately ten minutes. It is conservatively assumed that none of the pressurizer heaters are in operation.

(7) Operating Basis Earthquake

The mechanical stresses resulting from the Operating Basis Earthquake are considered on a component basis. Fatigue analysis, where required by the codes, is performed by the supplier as part of the stress analysis report. The earthquake loads are a part of the mechanical loading conditions specified in the equipment specifications. The origin of their determination is separate and distinct from those transients resulting from fluid pressure and temperature. They are, however, considered in the design analysis.

(8) Excessive Feedwater Flow

This transient is conservatively defined to cover the occurrence of several events of the same general nature. These include:

(a) Inadvertent opening of a feedwater control valve.

(b) Turbine overspeed (110%) with an open feedwater control valve.

(c) Small steamline break with an open feedwater control valve.

The excessive feedwater flow transient results from inadvertent opening of a feedwater control valve when the plant is at hot shutdown and the steam generator is in the no-load condition. The feedwater, condensate, and heater drain systems are in operation. The stem of a feedwater control valve has been assumed to fail, with the valve immediately reaching the full open position. The feedwater flow to the affected loop is assumed to step from essentially zero flow to the value determined by the system resistance and the developed head of all operating feedwater pumps. Steam flow is assumed to remain at zero, and the temperature of the feedwater entering the steam generator is conservatively assumed to be 32°F. Feedwater flow is isolated on a safety injection signal actuated by a low steamline pressure or low pressurizer pressure signal. Auxiliary feedwater flow, initiated by the safety injection signal, is assumed to continue with all pumps discharging into the affected steam generator. It is also assumed, for conservatism in the secondary side analysis, that auxiliary feedwater flows to the steam generators not affected by the malfunctioned valve, in the so-called "unfailed loops." Plant conditions stabilize at the values reached in 600 seconds, at which time auxiliary feedwater flow is terminated. The plant is then either taken to cold shutdown, or returned to the no-load condition at a normal heatup rate with the auxiliary feedwater system under manual control.

For design purposes, this transient is assumed to occur 30 times during the life of the plant.

(9) Reactor Coolant System (RCS) cold overpressurization occurs during startup and shutdown conditions at low temperature, with or without existence of a steam bubble in the pressurizer, and is especially severe when RCS is in water-solid configuration. The event is inadvertent and usually generated by any one of variety of malfunctions or operators errors. All events which have occured to a date may be categorized as belonging to either events resulting in the addition of mass (mass input transient) or events resulting in the addition of heat (heat input transient). All these possible transients are represented by composite umbrella design transients, referred to here as RCS cold overpressurization.

For design purposes, this transient is assumed to occur 10 times during the life of the plant.

Emergency Conditions

The following primary system transients are considered Emergency Conditions:

(1) Small Loss of Coolant Accident

For design purposes, the small loss of coolant accident is defined as a break equivalent to the severance of greater than a 3/8-inch inside diameter branch connection but less than 1 square foot in area. Following reactor trip, cooling and depressurization of the RCS continues and the emergency core cooling system and cold leg accumulators are actuated. The minimum required safeguards delivery from the ECCS pumps is assured.

(2) Small Steam Break

For design transient purposes, a small steam break is defined as a break equivalent in effect to a steam safety valve opening and remaining open. The following conservative assumptions are used in defining the transients:

(a) The reactor is initially in a hot, zero-power condition.

(b) The small steam break results in immediate reactor trip and ECCS actuation.

(c) A large shutdown margin, coupled with no feedback or decay heat, prevents heat generation during the transient.

(d) The ECCS operates at a design capacity and repressurizes the RCS within a relatively short time.

Faulted Conditions

The following primary system transients are considered Faulted Conditions:

(1) Reactor Coolant Pipe Break (Large Loss of Coolant Accident)

Following rupture of a reactor coolant pipe resulting in a large loss of coolant, the primary system pressure decreases causing the primary system temperature to decrease. Because of the rapid blowdown of coolant from the system and the comparatively large heat capacity of the metal sections of the components, it is likely that the metal will still be at or near the operating temperature by the end of blowdown. It is conservatively assumed that the ECCS is actuated to introduce water at a minimum temperature of 60°F into the RCS. The safety injection signal will also result in reactor and turbine trips.

(2) Large Steam Line Break

This transient is based on the complete severance of the largest steam line. The following conservative assumptions were made:

(a) The reactor is initially in a hot, zero-power condition.

(b) The steam line break results in immediate reactor trip and ECCS actuation.

(c) A large shutdown margin, coupled with no feedback or decay heat, prevents heat generation during the transient.

(d) The ECCS operates at design capacity and repressurizes the RCS within a relatively short time.

The above conditions result in the most severe temperature and pressure variations which the primary system will encounter during a steam break accident.

(3) Steam Generator Tube Rupture

This accident postulates the double-ended rupture of a steam generator tube resulting in a decrease in pressurizer level and reactor coolant pressure. Reactor trip will occur due to the resulting depressurization. This accident will result in a transient which is no more severe than that associated with a reactor trip from full power. Therefore it requires no special treatment insofar as fatigue evaluation is concerned, and no specific number of occurrences is postulated.

(4) Safe Shutdown Earthquake

The mechanical dynamic or static equivalent loads due to the vibratory motion of the Safe Shutdown Earthquake are considered on a component basis.

Test Conditions

The following primary system transients under Test Conditions are discussed:

(1) Turbine Roll Test

This transient is imposed upon the plant during the hot functional test period for turbine cycle checkout. Reactor coolant pump power will be used to heat the reactor coolant to operating temperature (no-load conditions) and the steam generated will be used to perform a turbine roll test. However, the plant cooldown during this test will exceed the 100°F per hour design rate.

This transient occurs before plant startup and the number of cycles is therefore independent of other operating transients.

(2) Primary Side Hydrostatic Test

The pressure tests include both shop and field hydrostatic tests which occur as a result of component or system testing. This hydrostatic test is performed at a water temperature which is compatible with reactor vessel material ductility requirements and a test pressure of 3107 psig (1.25 times design pressure). In this test, the RCS is pressurized to 3107 psig coincident with steam generator secondary side pressure of 0 psig. The number of cycles is independent of other operating transients.

(3) Secondary Side Hydrostatic Test

The secondary side of the steam generator is pressurized to 1.25 design pressure with a minimum water temperature of 120°F coincident with the primary side at 0 psig.

These tests may be performed either prior to plant startup, or subsequently following shutdown for major repairs or both. The number of cycles is therefore independent of other operating transients.

(4) Primary Side Leakage Test

Subsequent to each time the primary system has been opened, a leakage test will be performed. During this test the primary system pressure is, for design purposes, raised to 2500 psia, with the system temperature above the minimum temperature imposed by reactor vessel material ductility requirements, while the system is checked for leaks. In actual practice, the primary system is pressurized to less than 2500 psia as measured at the pressurizer, to prevent the pressurizer safety valves from lifting during the test.

During this leakage test, the secondary side of the steam generator must be pressurized such that the pressure differential across the tube sheet does not exceed 1600 psi. This is accomplished with the steam, feedwater, and blowdown lines closed off.

5.2.1.6 Identification of Active Pumps and Valves

Valves in the Reactor Coolant Pressure Boundary (RCPB) are tabulated in Section 3.9.3.2. These valves are identified as being either active or inactive.

Active valves are those whose operability through a mechanical motion is relied upon to perform a safety function during the transients or events considered in each operating condition category. Inactive valves have no required motion. They must only retain their structural integrity.

There are no active pumps in the reactor coolant pressure boundary. The reactor coolant pumps are classified as inactive.

The design methods and procedures, which are used to show that active valves will operate during a faulted condition, are described in Section 3.9.3.2.

5.2.1.7 Design of Active Pumps and Valves

The methods that will be used to assure that pumps required to function and valves required to open or close during (or following) a specified plant condition are described in Section 3.9.3.2.

5.2.1.8 Inadvertent Operation of Valves

Those valves which are used in the isolation of the RCPB during normal plant operation, and are not relied on to function after an accident, are redundant valves and do not increase the severity of any transient.

5.2.1.9 Stress and Pressure Limits

Inactive components are designed in accordance with ASME Boiler and Pressure Vessel Code Section III. The codes and stress limits used for Class 1 components are summarized in Section 5.2.1.10.

5.2.1.10 Stress Analysis for Structural Adequacy

Portions of the analyses and results discussed in this section were performed based upon postulated primary loop pipe breaks and pressurizer surge line breaks, the dynamic effects of which have been eliminated as discussed in Sections 3.6B and 3.6A, respectively. The affected analyses envelope the effects remaining from other postulated breaks and as such continue to demonstrate the adequacy of the plant design. Loads on primary component supports may be reduced based upon the above and upon consideration of the remaining postulated, high energy pipe breaks.

5.2.1.10.1 Loading Conditions

The structural stress analyses performed on the reactor coolant system considers the loadings specified as shown in Table 5.2-4. These loads result from thermal expansion, pressure, weight, Operating Basis Earthquake (OBE), Safe Shutdown Earthquake (SSE), design basis loss of coolant accident, and plant operational thermal and pressure transients.

5.2.1.10.2 Analysis of the Reactor Coolant Loop and Supports

The loads used in the analysis of the reactor coolant loop piping are described in detail below.

Pressure

Pressure loading is identified as either membrane design pressure or general operating pressure, depending upon its application. The membrane design pressure is used in connection with the longitudinal pressure stress and minimum wall thickness calculations in accordance with the ASME Code.

The term operating pressure is used in connection with determination of the system deflections and support forces. The steady-state operating hydraulic forces based on the system initial pressure are applied as general operating pressure loads to the reactor coolant loop model at changes in direction or flow area.

Weight

A dead weight analysis is performed to meet code requirements by applying a 1.0g load downward on the complete piping system. The piping is assigned a distributed mass or weight as a function of its properties. This method provides a distributed loading to the piping system as a function of the weight of the pipe and contained fluid during normal operating conditions.

Seismic

The forcing functions for the reactor coolant loop seismic piping analyses are derived from dynamic response analyses of the Reactor building subjected to seismic ground motion. Input is in the form of floor response spectrum curves at various elevations within the Reactor Building.

For the OBE and SSE seismic analyses, 1.0% critical damping, is used in the reactor coolant loop/supports system analysis.

For the spectrum analysis, the total response loading obtained from the seismic analysis consists of two parts: the inertia response loading of the piping system and the differential anchor movements loading. Two sets of seismic moments are required to perform an ASME Code analysis. The first set includes only the moments resulting from inertia effects and these moments are used in the resultant moment (M_i) value for Equations 9 and 13 of NB-3650. The second set includes the moments resulting from seismic anchor motions and are used in Equations 10 and 11 of NB-3650. Differential anchor movement is discussed in Section 3.7.3.9.

Loss-of-Coolant Accident

Blowdown loads are developed in the reactor coolant loops as a result of transient flow and pressure fluctuations following a postulated pipe break. Structural consideration of dynamic effects of postulated pipe breaks requires postulation of a finite number of break locations. Break locations are postulated at the accumulator line and RHR loop nozzles, and at the main steam and feedwater line steam nozzles. Breaks in the primary loop piping and the pressurizer surge line have been eliminated with the application of leak-before-break (see Sections 3.6A.2.1.5 and 3.6B.1).

Reactor coolant loop time history dynamic analyses are performed for these postulated break cases. Hydraulic models are used to generate time-dependent hydraulic forcing functions used in the analysis of the reactor coolant loop for each break case. For a further description of the hydraulic forcing functions, refer to Section 3.6B.2.

Transients

The Code requires satisfaction of certain requirements relative to operating transient conditions. Operating transients are discussed in Section 5.2.1.5.

The vertical thermal growth of the reactor pressure vessel nozzle centerlines is considered in the thermal analysis to account for equipment nozzle displacement as an external movement.

The hot moduli of elasticity, E, the coefficient of thermal expansion at the metal temperature, α, the external movements transmitted to the piping due to vessel growth, and the temperature rise above the ambient temperature, ΔT, define the required input data to perform the flexibility analysis for thermal expansion.

To provide the necessary high degree of integrity for the reactor coolant system, the transient conditions selected for fatigue evaluation are based on conservative estimates of the magnitude and anticipated frequency of occurrence of the temperature and pressure transients resulting from various plant operation conditions.

5.2.1.10.3 Reactor Coolant Loop Models and Methods

The analytical methods used in obtaining the solution consists of the transfer matrix method and stiffness matrix formulation for the static structural analysis, the response spectra method for seismic dynamic analysis, and time history integration method for the loss of coolant accident dynamic analysis.

The integrated reactor coolant loop/supports system model is the basic system model used to compute loadings on components, component supports, and piping. The system model includes the stiffness and mass characteristics of the reactor coolant loop piping and components, the stiffness of supports, the stiffness of auxiliary line piping which affect the system and the stiffness of piping restraints. The deflection solution of the entire system is obtained for the various loading cases from which the internal member forces and piping stresses are calculated.

Static

The reactor coolant loop/supports system model, constructed for the WESTDYN computer program, is represented by an ordered set of data which numerically describes the physical system. Figure 5.2-1 shows an isometric line schematic of this mathematical model. The steam generator and reactor coolant pump vertical and lateral support members are described in Section 5.5.14.

The spatial geometric description of the reactor coolant loop model is based upon the reactor coolant loop piping layout and equipment drawings. The node point coordinates and incremental lengths of the members are determined from these drawings. Geometrical properties of the piping and elbows along with the modulus of elasticity, E, the coefficient of thermal expansion, α, the average temperature change from ambient temperature, ΔT, and the weight per unit length are specified for each element. The primary equipment supports are represented by stiffness matrices which define restraint characteristics of the supports. Due to the symmetry of the static

loadings, the reactor pressure vessel centerline is represented by a fixed boundary in the system mathematical model. The vertical thermal growth of the reactor vessel nozzle centerline is considered in the construction of the model.

The model is made up of a number of sections, each having an overall transfer relationship formed from its group of elements. The linear elastic properties of the section are used to define the stiffness matrix for the section. Using the transfer relationship for a section, the loads required to suppress all deflections at the ends of the section arising from the thermal and boundary forces for the section are obtained. These loads are incorporated into the overall load vector.

After all the sections have been defined in this matter, the overall stiffness matrix and associated load vector to suppress the deflection of all the network points is determined. By inverting the stiffness matrix, the flexibility matrix is determined. The flexibility matrix is multiplied by the negative of the load vector to determine the network point deflections due to the thermal and boundary force effects. Using the general transfer relationship, the deflections and internal forces are then determined at all node points in the system.

The static solutions for deadweight, thermal, and general pressure loading conditions are obtained by using the WESTDYN computer program. The derivation of the hydraulic loads for the loss of coolant accident analysis of the loop is covered in Section 3.6.

Seismic

The model used in the static analysis is modified for the dynamic analysis by including the mass characteristics of the piping and equipment. All of the piping loops are included in the system model. The effect of the equipment motion on the reactor coolant loop/supports system is obtained by modeling the mass and the stiffness characteristics of the equipment in the overall system model.

The steam generator is represented by three discrete masses. The lower mass is located at the intersection of the centerlines of the inlet and outlet nozzles of the steam generator. The middle mass is located at the steam generator upper support elevation and the third mass is located at the top of the steam generator.

The reactor coolant pump is represented by a two discrete mass model. The lower mass is located at the intersection of the centerlines of the pump suction and discharge nozzles.

The reactor vessel and core internals are represented by approximately ten discrete masses. The masses are lumped at various locations along the length of the vessel and along the length of the representation of the core internals, as shown in Figure 5.2-2.

The primary equipment component upper and lower lateral supports are inactive during plant heatup, cooldown and normal plant operating conditions. However, these restraints become active when the plant is at power and under the rapid motions of the

reactor coolant loop components that occur from the dynamic loadings and are represented by stiffness matrices and/or individual tension or compression spring members in the dynamic model. The analyses are performed at the full power condition.

The solution for the seismic disturbance employs the response spectra method. This method employs the lumped mass technique, linear elastic properties, and the principle of modal superposition. The floor response spectra are applied along the N-S and vertical axes, and then along the E-W and vertical axes to consider the effects of two independent cases of shock.

From the mathematical description of the system, the overall stiffness matrix [K] is developed from the individual element stiffness matrices using the transfer matrix method. After deleting the rows and columns representing rigid restraints, the stiffness matrix is revised to obtain a reduced stiffness matrix [KR] associated with mass degrees of freedom only. From the mass matrix and the reduced stiffness matrix, the natural frequencies and the normal modes are determined. The modal participation factor matrix is computed and combined with the appropriate response spectra value to give the modal amplitude for each mode. The total modal amplitude is obtained by combining the horizontal and vertical shock directions using the absolute sum method and by combining each mode using the square root of the sum of the squares method.

The modal amplitudes are then converted to displacements in the global coordinate system and applied to the corresponding mass point. From these data the forces, moments, deflections, rotations, support reactions and piping stresses are calculated for all significant modes.

The total seismic response is computed by combining the contributions of the significant modes as described in Section 3.7.3.

Loss-of-Coolant Accident

The mathematical model used in the static analyses is modified for the loss-of-coolant accident analyses to represent the severance of the reactor coolant loop piping at the postulated break location. Modifications include addition of the mass characteristic of the piping and equipment. To obtain the proper dynamic solution, two masses, each containing six dynamic degrees of freedom and located on each side of the break, are included in the mathematical model. The natural frequencies and eigen-vectors are determined from this broken loop model.

The time-history hydraulic forces at the node points are combined to obtain the forces and moments acting at the corresponding structural lumped-mass node points.

The dynamic structural solution for the full power loss of coolant accident is obtained by using a modified-predictor-corrector-integration technique and normal mode theory.

When elements of the system can be represented as single acting members (tension or compression members), they are considered as nonlinear elements, which are represented mathematically by the combination of a gap, a spring, and a viscous

damper. The force in this nonlinear element is treated as an externally applied force in the overall normal mode solution. Multiple non-linear elements can be applied at the same node, if necessary.

The time-history solution is performed in the program WESTDYN. The input to this subprogram consists of the natural frequencies, normal modes, applied forces and nonlinear elements. The natural frequencies and normal modes for the modified reactor coolant loop dynamic model are determined with the WESTDYN program. To properly simulate the release of the strain energy in the pipe, the internal forces in the system at the postulated break location due to the initial steady-state hydraulic forces, thermal forces, and weight forces are determined. The release of the strain energy is accounted for by applying the negative of these internal forces as a step function loading. The initial conditions are equal to zero because the solution is only for the transient problem (the dynamic response of the system from the static equilibrium position). The time history displacement solution of all dynamic degrees of freedom is obtained using the program WESTDYN and employing 4% critical damping.

The reactor vessel is considered fixed in the time history analysis described above. The loss of coolant accident displacements of the reactor vessel are accounted for in the piping and support evaluation by superimposing the effect of the reactor vessel motions on the loop loss of coolant accident results.

The time-history displacement response is used in computing support loads and in performing stress evaluation of the reactor coolant loop piping.

The support loads [F] are computed by multiplying the support stiffness matrix [K] and the displacement vector [δ] at the support point. The support loads are used in the evaluation of the supports.

The time-history displacements are used in WESTDYN to determine the internal forces, deflections, and stresses at each end of the piping elements. For this calculation the displacements are treated as imposed deflections on the reactor coolant loop masses. The results of this solution are used in the piping stress evaluation.

Transients

Operating transients in a nuclear power plant cause thermal and/or pressure fluctuations in the reactor coolant fluid. The thermal transients cause time-varying temperature distributions across the pipe wall. These temperature distributions resulting in pipe wall stresses may be further subdivided in accordance with the code into three parts: a uniform, a linear, and a non-linear portion. The uniform portion results in general expansion loads. The linear portion causes a bending moment across the wall and the non-linear portion causes a skin stress.

The transients as defined in Section 5.2.1.5 are used to define the fluctuations in plant parameters. A one-dimensional finite difference heat conduction program is used to solve the thermal transient problem. The pipe is represented by at least fifty elements through the thickness of the pipe. The convective heat transfer coefficient employed in

this program represents the time varying heat transfer due to free and forced convection. The outer surface is assumed to be adiabatic while the inner surface boundary experiences the temperature of the coolant fluid. Fluctuations in the temperature of the coolant fluid produce a temperature distribution through the pipe wall thickness which varies with time. An arbitrary temperature distribution across the wall is shown in Figure 5.2-3.

The average through-wall temperature, T_A, is calculated by integrating the temperature distribution across the wall. This integration is performed for all time steps so that T_A is determined as a function of time.

$$T_A(t) = \frac{1}{H}\int_0^H T(X,t)\,dX$$

Where

H = pipe thickness;

X = distance through wall;

t = time;

T = temperature distributuion as a function of X and t; and

T_A = average through-wall temperature as a function of t.

The range of temperature between the largest and smallest value of T_A is used in the flexibility analysis to generate the moment loadings caused by the associated temperature changes.

The thermal moment about the mid-thickness of the wall caused by the temperature distribution through the wall is equal to:

$$M = E\alpha\int_0^H (X - \frac{H}{2})\,T(X,t)\,dX$$

The equivalent thermal moment produced by the linear thermal gradient as shown in Figure 5.2-3 about the mid-wall thickness is equal to:

$$M_L = E\alpha\frac{\Delta T_1}{12}H^2$$

Equating M_L and M, the solution for ΔT_1 as a function of time is:

$$\Delta T_1(t) = \frac{12}{H^2}\int_0^H (X - \frac{H}{2})\, T(X,t)\, dX$$

The maximum nonlinear thermal gradient, ΔT_2, is determined as the difference between the actual metal temperature on either the inside or the outside surface and half of the average linear thermal gradient plus the average temperature.

$$\Delta T_{2I}(t) = T(0,t) - T_A(t) - \frac{|\Delta T_1(t)|}{2}$$

Load Set Generation

A load set is defined as a set of pressure loads, moment loads, and through-wall thermal effects at a given location and time in each transient. The method of load set generation is based on Reference [1]. The through-wall thermal effects are functions of time and can be subdivided into four parts:

(1) Average temperature (T_A) is the average temperature through-wall of the pipe which contributes to general expansion loads.

(2) Radial linear thermal gradient which contributes to the through-wall bending moment (ΔT_1).

(3) Radial nonlinear thermal gradient (ΔT_2) which contributes to a peak stress associated with shearing of the surface.

(4) Discontinuity temperature (T_A - T_B) represents the difference in average temperature at the cross sections on each side of a discontinuity.

Each transient is described by at least two load sets representing the maximum and minimum stress state during each transient. The construction of the load sets is accomplished by combining the following to yield the maximum (minimum) stress state during each transient.

(1) ΔT_1

(2) ΔT_2

(3) $\alpha_A T_A - \alpha_B T_B$

(4) Moment loads due to T_A

(5) Pressure loads

This procedure produces at least twice as many load sets as transients for each point.

As a result of the normal mode spectral technique employed in the seismic analysis the load components cannot be given signed values. Eight load sets are used to represent all possible sign permutations of the seismic moments at each point, thus ensuring the most conservative combination of seismic loads are used in the stress evaluation.

For all possible load set combinations, the primary-plus-secondary and peak stress intensities, fatigue reduction factors (K_e) and cumulative usage factors, U, are calculated. The WESTDYN program is used to perform this analysis in accordance with the ASME Boiler and Pressure Vessel Code, Section III, Subsection NB-3650. Alternatively, detailed finite element stress analyses may be used to determine primary-plus-secondary and peak stress intensities, for the load set combinations. Since it is impossible to predict the order of occurrence of the transients over a forty-year life, it is assumed that the transients can occur in any sequence. This is a very conservative assumption.

The combination of load sets yielding the highest alternating stress intensity range is used to calculate the incremental usage factor. The next most severe combination is then determined and the incremental usage factor calculated. This procedure is repeated until all combinations having allowable cycles $<10^6$ are formed. The total cumulative usage factor at a point is the summation of the incremental usage factors.

5.2.1.10.4 Primary Component Supports Models and Methods

The static and dynamic structural analyses employ the matrix method and normal mode theory for the solution of lumped-parameter, multimass structural models. The equipment support structure models are dual-purpose since they are required 1) to quantitatively represent the elastic restraints which the supports impose upon the loop, and 2) to evaluate the individual support member stresses due to the forces imposed upon the supports by the loop.

Models for the STRUDL computer program are constructed for the steam generator lower, steam generator upper lateral, and reactor coolant pump supports. Structure geometry, topology and member properties are used in the modeling.

A description of the supports is found in Section 5.5.14. Detailed models are developed using beam elements and plate elements, where applicable.

The STRUDL computer program is used with these models to obtain support stiffness matrices and member influence coefficients for the steam generator and reactor coolant pump supports. Unit force along and unit moment about each coordinate axis are applied to the models at the equipment vertical centerline joint. Stiffness analyses are performed for each unit load for each model.

Joint displacements for applied unit loads are formulated into flexibility matrices. These are inverted to obtain support stiffness matrices which are included in the reactor coolant loop model.

Loads acting on the supports obtained from the reactor coolant loop analysis, support structure member properties, and influence coefficients at each end of each member are input into the WESAN program.

For each support case used, the following is performed:

(1) Combine the various types of support plane loads to obtain operating condition loads (Normal, Upset, or Faulted).

(2) Multiply member influence coefficients by operating condition loads to obtain all member internal forces and moments.

(3) Solve appropriate stress or interaction equations for the specified operating condition. Maximum normal stress, shear stress, and combined load interaction equation values are printed as a ratio of maximum actual valued divided by limiting values. ASME Boiler and Pressure Vessel Code Section III, Subsection NF, stress and interaction equations are used with limits for the operating condition specified.

Tables 5.2-15 through 5.2-17 present maximum stresses in each member of the steam generator and reactor coolant pump support structures expressed as a percentage of maximum permissible values for all operating condition loadings. Figures 5.2-9 through 5.2-11 illustrate the support models and show the member locations.

The results of pipe displacement restraint evaluation are presented in Table 5.2-18.

The reactor vessel support structures were analyzed using a finite-element model with the WECAN computer program for an applied force resulting from all loading conditions. Dynamic forces applied to these structures are the combination of forces obtained from the reactor coolant loop analysis and the reactor vessel internals analysis. The loads on the reactor vessel supports for all loading conditions are shown in Table 5.2-19 and the resulting stresses are shown in Table 5.2-20.

5.2.1.10.5 Analysis of Primary Components

Equipment which serves as part of the pressure boundary in the reactor coolant loop include the steam generators, the reactor coolant pumps, the pressurizer, and the reactor vessel. This equipment is ANS Safety Class 1 and the pressure boundary meets the requirements of the ASME Boiler and Pressure Vessel Code, Section III, Subsection NB. This equipment is evaluated for the loading combinations outlined in Table 5.2-4. The equipment is analyzed for 1) the normal loads of deadweight, pressure and thermal, 2) mechanical transients of OBE, SSE, and pipe ruptures, and 3) pressure and temperature transients outlined in Section 5.2.1.5.

The results of the reactor coolant loop analysis are used to determine the loads acting on the nozzles and the support/component interface locations. These loads are supplied for all loading conditions on an "umbrella" load basis. That is, on the basis of previous plant analyses, a set of loads are determined which should be larger than those seen in any single plant analysis. The umbrella loads represent a conservative

means of allowing detailed component analysis prior to the completion of the system analysis. Upon completion of the system analysis, conformance is demonstrated between the actual Plant loads and the loads used in the analyses of the components. Any deviations where the actual load is larger than the umbrella load will be handled by individualized analysis.

Seismic analyses are performed individually for the reactor coolant pump, the pressurizer, and the steam generator. Detailed and complex dynamic models are used for the dynamic analyses. The response spectra corresponding to the building elevation at the highest component/building attachment elevation is used for the component analysis. Seismic analyses for the steam generator is performed using damping values per Table 3.7-24. The analysis of the reactor coolant pump for determination of loads on the motor, main flange, and pump internals is performed using the damping for bolted steel structures per Table 3.7-24. This damping is applicable to the reactor coolant pump since the main flange, motor stand, and motor are all bolted assemblies (see Section 5.5). The reactor pressure vessel is qualified by static stress analysis based on loads that have been derived from dynamic analyses.

Reactor coolant pressure boundary components are further qualified to ensure against unstable crack growth under Faulted Conditions by performing detailed fracture analyses of the critical areas of this boundary. Actuation of the emergency core cooling system produces relatively high thermal stresses in the system. Regions of the pressure boundary which come into contact with emergency core cooling system water are given primary consideration. These regions include the reactor vessel beltline region, the reactor vessel primary coolant nozzle and the safety injection nozzles in the piping system.

Two methods of analysis are used to evaluate thermal effects in the regions of interest. The first method is linear elastic fracture mechanics (LEFM). The LEFM approach to the design against failure is basically a stress intensity consideration in which criteria are established for fracture instability in the presence of a crack. Consequently, a basic assumption employed in LEFM is that a crack or crack-like defect exists in the structure. The essence of the approach is to relate the stress field developed in the vicinity of the crack tip to the applied stress on the structure, the material properties, and the size of defect necessary to cause failure.

The elastic stress field at the crack-tip in any cracked body can be described by a single parameter designated as the stress intensity factor, K. The magnitude of the stress intensity factor, K, is a function of the geometry of the body containing the crack, the size and location of the crack, and the magnitude and distribution of the stress.

The criterion for failure in the presence of a crack is that failure will occur whenever the stress intensity factor exceeds some critical value. For the opening mode of loading (stresses perpendicular to the major plane of the crack) the stress intensity factor is designated as K_I and the critical stress intensity factor is designated K_{IC}. Commonly called the fracture toughness, K_{IC} is an inherent material property which is a function of temperature and strain rate. Any combination of applied load, structural

configuration, crack geometry and size which yields a stress intensity factor, K_{IC}, for the material will result in crack instability.

The criterion of the applicability of LEFM is based on plasticity considerations at the postulated crack tip. Strict applicability (as defined by ASTM) of LEFM to large structures where plane strain conditions prevail requires that the plastic zone developed at the tip of the crack does not exceed 2.25% of the crack depth. In the present analysis, the plastic zone at the tip of the postulated crack can reach 20% of the crack depth. However, LEFM has been successfully used quite often to provide conservative brittle fracture prevention evaluations even in cases where strict applicability of the theory is not permitted due to excessive plasticity. Recently, experimental results from Heavy Section Steel Technology (HSST) Program intermediate pressure vessel tests, have shown that LEFM can be applied conservatively as long as the pressure component of the stress does not exceed the yield strength of the material. The addition of the thermal stresses, calculated elastically, which result in total stresses in excess of the yield strength does not affect the conservatism of the results, provided that these thermal stresses are included in the evaluation of the stress intensity factors. Therefore, for faulted condition analyses, LEFM is considered applicable for the evaluation of the vessel inlet nozzle and beltline region.

In addition, it has been well established that the crack propagation of existing flaws in a structure subjected to cyclic loading can be defined in terms of fracture mechanics parameters. Thus, the principles of LEFM are also applicable to fatigue growth of a postulated flaw at the vessel inlet nozzle and beltline region.

For the safety injection and charging line nozzles, which are fabricated from 304 stainless steel, LEFM is not applicable because of extreme ductility of the material. For these nozzles, the thermal effects are evaluated using the principles of Miner's hypothesis of linear cumulative damage in conjunction with fatigue data from constant stress or strain fatigue tests. The cumulative usage fatigue defined as the sum of the ratios of the number of cycles of each transient (N) to the allowable number of cycles for the stress range associated with the transient (N) must not exceed 1.0.

An example of a Faulted Condition evaluation carried out according to the procedure discussed above is given in Reference [2]. This report discusses the evaluation procedure in detail as applied to a severe faulted condition (a postulated loss of coolant accident), and concludes that the integrity of the reactor coolant pressure boundary would be maintained in the event of such an accident.

Valves in the RCS are designated ASME Class 1 and are designed and analyzed to the limits outlined in Table 5.2-5. Valves in sample lines connected to the RCS are not considered to be ANS Safety Class 1 nor ASME Class 1. This is because the nozzles where the lines connect to the primary system piping are restricted by 3/8-inch orifices. These holes restrict the flow such that loss through a severance of one of these lines can be made up by normal charging flow.

5.2.1.10.6 Reactor Vessel Support LOCA Loads

5.2.1.10.6.1 Introduction

This section presents the method of computing the reactor pressure vessel loss of coolant accident (LOCA) support loads and displacements. The structural analysis considers simultaneous application of the time-history loads on the reactor vessel resulting from the reactor coolant loop vessel nozzle mechanical loads, internal hydraulic pressure transients, and reactor cavity pressurization. The vessel is restrained by reactor vessel support pads and shoes beneath four of the reactor vessel nozzles, and the reactor coolant loops with the primary supports of the steam generators and the reactor coolant pumps. The objective of this analysis is to obtain reactor vessel displacements and reactor vessel support loads.

Pipe displacement restraints installed in the primary shield wall limit the break opening area of the vessel nozzle pipe breaks to less than 127 square inches. This break area was determined to be an upper bound by using worst case vessel and pipe relative motions based on similar plant analyses. Detailed studies have shown that pipe breaks at the hot or cold leg reactor vessel nozzles, even with a limited break area, would give the highest reactor vessel support loads and the highest vessel displacements, primarily due to the influence of reactor cavity pressurization. By considering these breaks, the most severe reactor vessel support loads are determined. For completeness, a break outside the shield wall, for which there is no cavity pressurization, is also analyzed; specifically, the pump outlet nozzle pipe break is considered. In summary, three loss of coolant accident conditions are analyzed.

(1) Reactor vessel inlet nozzle pipe break

(2) Reactor vessel outlet nozzle pipe break

(3) Reactor coolant pump outlet nozzle pipe break

5.2.1.10.6.2 Interface Information

The Tennessee Valley Authority (TVA) is responsible for reactor containment design and analysis. Stiffness of the primary shield wall beneath the reactor vessel supports was provided, by TVA, to Westinghouse.

All other input information was developed within Westinghouse. These items are as follows: reactor internals properties, loop mechanical loads and loop stiffness, internal hydraulic pressure transients, asymmetric cavity pressurization loads and reactor support stiffnesses. These inputs allowed formulation of the mathematical models and performance of the analyses.

5.2.1.10.6.3 Loading Conditions

Following a postulated pipe rupture at the reactor vessel nozzle, the reactor vessel is excited by time-history forces. As described, these forces are the combined effect of three phenomena: (1) reactor coolant loop mechanical loads, (2) reactor cavity pressurization forces and (3) reactor internal hydraulic forces.

The reactor coolant loop mechanical forces are derived from the elastic analyses of the loop piping for the postulated break. This analysis is described in Section 5.2.1.10.3. The reactions on the nozzles of all the unbroken piping legs are applied to the vessel in the RPV blowdown analysis.

Reactor cavity pressurization forces arise for the pipe breaks at the vessel nozzles from the steam and water which is released into the reactor cavity through the annulus around the broken pipe. The reactor cavity is pressurized asymmetrically with higher pressure horizontally across the reactor cavity resulting in horizontal forces applied to the reactor vessel. Smaller vertical forces arising from pressure on the bottom of the vessel and the vessel flanges are also applied to the reactor vessel. The cavity pressure analysis is described in Section 6.2.

The internals reaction forces develop from asymmetric pressure distributions inside the reactor vessel. For a vessel inlet nozzle break and pump outlet nozzle break, the depressurization wave path is through the broken loop inlet nozzle and into the region between the core barrel and reactor vessel. (See Figure 3.9-1). This region is called the downcomer annulus. The initial waves propagate up, down and around the downcomer annulus and up through the fuel. In the case of an RPV outlet-nozzle break, the wave passes through the outlet nozzle and directly into the upper internals region, depressurizes the core, and enters the down comer annulus from the bottom of the vessel. Thus, for an outlet nozzle break, the downcomer annulus is depressurized with much smaller differences in pressure horizontally across the core barrel than for the inlet break. For both the inlet and outlet nozzle breaks, the depressurization waves continue their propagation by reflection and translation through the reactor vessel fluid but the initial depressurization wave has the greatest effect on the loads.

The reactor internals hydraulic pressure transients were calculated including the assumption that the structural motion is coupled with the pressure transients. This phenomena has been referred to as hydroelastic coupling or fluid-structure interaction. The hydraulic analysis considers the fluid structure interaction of the core barrel by accounting for the deflections of constraining boundaries which are represented by masses and springs. The dynamic response of the core barrel in its beam bending mode responding to blowdown forces compensates for internal pressure variation by increasing the volume of the more highly pressurized regions. The analytical methods used to develop the reactor internals hydraulics are described in WCAP-8708[11].

5.2.1.10.6.4 Reactor Vessel and Internals Modeling

A detailed discussion on Reactor Pressure Vessel (RPV) / Internals modeling and the RPV system dynamic analysis under faulted condition is provided in Section 3.9.2.5.

5.2.1.10.6.5 Analytical Methods

The time history effects of the cavity pressurization loads, internals loads and loop mechanical loads are combined and applied simultaneously to the appropriate nodes of the mathematical model of the reactor vessel and internals. The analysis is performed by numerically integrating the differential equations of motion to obtain the

transient response. The output of the analysis includes, among other things, the displacements of the reactor vessel and the loads in the reactor vessel supports which are combined with other applicable faulted condition loads and subsequently used to calculate the stresses in the supports. Also, the reactor coolant loop is analyzed by applying the reactor vessel displacements to the reactor coolant loop model. The resulting loads and stresses in the piping, components and supports are then combined with those from the loop dynamic blowdown analysis and the adequacy of the system is verified. Thus, the effect of vessel displacements upon loop response and the effect of loop blowdown upon vessel displacements are both evaluated.

5.2.1.10.6.6 Results of the Analysis

As described, the reactor vessel and internals were analyzed for three postulated break locations. Table 5.2-13 summarizes the displacements and rotations of and about a point representing the intersection of the centerline of the nozzle attached to the leg in which the break was postulated to occur and the vertical centerline of the reactor vessel. Positive vertical displacement is up and positive horizontal displacement is away from and along the centerline of the vessel nozzle in the loop in which the break was postulated to occur. These displacements were calculated using an assumed break opening area for the postulated pipe ruptures at the vessel nozzles of 127 square inches and a double-ended rupture at the pump outlet nozzle. These areas are estimated prior to performing the analysis. Following the reactor coolant system structural analysis, the relative motions of the broken pipe ends are obtained from the reactor vessel and reactor coolant loop blowdown analyses. These motions resulted in an average break opening area of 35 square inches (42 square inches, peak) for the vessel inlet nozzle break and 13 square inches (15 square inches, peak) for the vessel outlet nozzle break. Since these areas are less than the areas used to generate the applied loads, the system structural analysis is conservative.

The vessel outlet nozzle break opening area of 13 in^2 also verifies the conservatism of using the reactor cavity pressure loads for a 127 in^2 inlet nozzle break as input to the analysis of a pipe rupture at the vessel outlet nozzle.

The maximum loads induced in the vessel supports due to the postulated pipe break are given in Table 5.2-14. These loads are per vessel support and are applied at the vessel nozzle pad. It is conservatively assumed that the maximum horizontal and vertical loads occur simultaneously and on the same support, even though the time history results show that these loads do not occur simultaneously on the same support. The peak vertical and horizontal load occurs for a vessel inlet nozzle break. Note that the peak horizontal load is an extremely conservative value since the break opening area for the vessel inlet nozzle break is only 35 in^2 instead of the 127 in^2 area used to generate the applied loads. If additional analysis was performed using the lower break opening area, the load would be considerably reduced. Furthermore, the peak vertical load and peak horizontal load do not occur on the same vessel support. The largest vertical loads are produced on the supports beneath and opposite the broken nozzle. The largest horizontal loads are produced on the supports which are the most perpendicular to the broken nozzle horizontal centerline.

The LOCA loads are combined with other applicable faulted condition loads and the total applied loads are obtained. These loads(defined on a per load basis) are summarized in Table 5.2-19. This total combined load is applied to the reactor vessel supporting structure, which is analyzed into two independent components: (1) the U shaped vessel shoe (Figure 5.2-5) and (2) the cooling box which is the structure between the shoe and the concrete (Figure 5.2-6). Final analyses have been performed on the support shoe and the cooling box structure and the results are presented in Section 5.2.1.10.6.

The reactor coolant loop piping was evaluated for the primary membrane plus bending stress intensity against the faulted condition stress limit, Equation (9) of subarticle NB–3650 of the ASME Section III, Nuclear Power Piping Code. The loads included in the evaluation result from the SSE inertia loading, deadweight, pressure, LOCA loop hydraulic forces, and reactor vessel motion. Individual loadings at critical stress locations were combined and primary stress intensities were calculated for the combined load sets. The primary stress intensities at all locations were under the faulted condition stress limit. The primary loop pipe breaks have been eliminated with LBB, as discussed in Section 3.6B; however, the primary stress intensities at all locations were under the faulted condition stress limit for the remaining pipe ruptures. It is therefore concluded that the reactor coolant loop piping meets the faulted condition requirements of ASME Section III and is capable of withstanding the consequences resulting from the applicable pipe rupture in the reactor coolant system.

For the evaluation of the design adequacy of equipment, the maximum loads at the primary equipment nozzles resulting from the analysis of each loading condition were determined. The external loads imposed upon primary equipment by the reactor coolant loop produce stress intensities which can be shown to be below the faulted condition allowable values.

The effects of the postulated breaks at the reactor vessel nozzle locations on the CRDM's, reactor vessel internals, RCS component supports, and the reactor core are presented in Section 5.2.1.10.9, Section 3.9.2.5.1, Section 5.2.1.10.4, and Section 4.2.1.3.5, respectively.

The results of these analyses verify that the integrity of the safeguards systems is assured during a loss-of-coolant accident and that the reactor can be safely shut down and maintained in a safe condition.

Dynamic effects of postulated double ended pipe rupture in the main reactor coolant piping have been eliminated from the design basis by application of leak-before-break (LBB) technology in accordance with the final rule change to General Design Criterion 4 as per Reference [12] of Section 3.6B.1. Authorization for their elimination is also provided in Reference [6] and is based on the fracture mechanics analysis results presented in References [7] and [8] of Section 3.6B.1.

Since the effects of the main coolant loop piping no longer have to be considered in the structural design basis, only the dynamic effects of the next most limiting breaks of auxiliary lines need to be considered. Consequently, the vessel support loads and

displacements will be considerably less than from the main loop line breaks. This is due to the fact that the auxiliary line breaks are smaller in size and are farther away from the main loop RPV inlet nozzle/outlet nozzle breaks and also for auxiliary line breaks cavity pressurization loads are not considered. Therefore, the results presented in Tables 5.2-13, 5.2-14, and Tables 5.2-19 through 5.2-21 are the bounding results.

5.2.1.10.7 Stress Criteria for Class 1 Components and Component Supports

Component Supports

All Class 1 components and supports are designed and analyzed for the Design, Normal, Upset, and Emergency Conditions to the rules and requirements of the ASME Code Section III. The design analysis or test methods and associated stress or load allowable limits that are used in evaluation of Faulted Conditions are those that are defined in Appendix F of the ASME Code with supplementary options outlined below:

(1) The test load method given in F-1370(d) is an acceptable method of qualifying components in lieu of satisfying the stress/load limits established for the component analysis.

The reactor vessel support pads are qualified using the test option. The reactor pressure vessel support pads are designed to restrain unidirectional horizontal motion in addition to supporting the vessel. The design of the supports allows radial growth of the vessel but restrains the vessel from horizontal displacements since tangential displacement of the vessel is prevented at each vessel nozzle.

To duplicate the loads that act on the pads during faulted conditions, the tests, which utilized a one-eighth linear scale model, were performed by applying a unidirectional static load to the nozzle pad. The load on the nozzle pad was reacted by a support shoe which was mounted to the test fixture.

The above modeling and application of load thus allows the maximum load capacity of the support pads to be accurately established. The test load, LT, was then determined by multiplying the maximum collapse load by sixty-four (ratio of prototype area to model area) and including temperature effects in accordance with the rules of the ASME Code, Section III.

The loads on the reactor vessel support pads, as calculated in the system analysis for faulted conditions are limited to the value of .80 LT. The tests performed and the limits established for the test load method ensure that the experimentally obtained value for LT is accurate and that the support pad design is adequate for its intended function.

(2) The faulted condition buckling loads for the primary equipment supports are within the limits presented in ASME III, Appendix F, Paragraph F-1370(c).

(3) For the faulted condition, tensile loads in primary equipment support bolting are limited to 0.7 S_u, but not to exceed in any case 0.9 S_y. The allowables are taken at temperature. In those few cases where bolts are used in shear or tension and shear, ASME Code Appendix XVII-2460 requirements will apply with an increase factor that is defined in Regulatory Guide 1.124.

Loading combinations and allowable stresses for ASME III Class 1 components and supports are given in Tables 5.2-4 and 5.2-5. The methods of load combination for each operating condition are as follows:

Design-Loads are combined by algebraic sum.

Normal, Upset-These loads are used in the fatigue evaluation in accordance with the methods prescribed in the ASME Code. Load sets are defined for each transient including the OBE and are combined such that the maximum stress ranges are obtained without regard to the order in which the transients occur (this is discussed in more detail in Section 5.2.1.10.3.)

Emergency-Loads are combined by algebraic sum.

Faulted-For primary equipment, LOCA and SSE loads are combined using the square-root-of-the-sum-of-the-squares (SRSS) method on a load component basis (i.e., the LOCA F_x is combined with the SSE F_x by SRSS, the LOCA F_y is combined with the SSE F_y by SRSS, and likewise for F_z, M_x, M_y). The sustained loads, such as weight effects, are combined with the SRSS result by algebraic sum.

For primary equipment supports, LOCA and SSE loads are combined using the absolute sum method. In order to satisfy the 2/3 P_c buckling criteria, LOCA and SSE loads were combined by SRSS for the RCP support columns.

For RCL piping, the deadweight moments were added to the LOCA moments prior to the SRSS combination of the LOCA and SSE loads.

5.2.1.10.8 Computer Program Descriptions

The following computer programs have been used in dynamic and static analyses to determine mechanical loads, stresses, and deformations of Seismic Category I components and equipment[3,10].

(1) WESTDYN - static, dynamic, and time history stress analysis of piping systems.

(2) THRUST - hydraulic loads on loop components from blowdown information.

(3) WESAN - reactor coolant loop equipment support structures analysis and evaluation.

(4) WECAN - finite element structural analysis.

5.2.1.10.9 LOCA Evaluation of the Control Rod Drive Mechanisms

The response of the control rod drive mechanisms (CRDMs) to the postulated reactor vessel inlet nozzle and outlet nozzle limited displacement breaks has been evaluated. The time history analysis of the mechanism has been performed for the vessel motion developed previously. A one row model of the CRMDs was formulated with gaps at the upper CRDM support modeled as nonlinear elements. The CRDM's were represented by beam elements with lumped masses. The translation and rotation of the vessel head was applied to this model (see Figure 5.2-12). The resulting loads and stresses were compared to allowables to verify the adequacy of the system. The highest loads occur at the head adaptor, the location where the mechanisms penetrate the vessel head. The bending moments at this location are presented in Table 5.2-21 for the longest and shortest CRDM. The combined effect including seismic loads is shown to be less than the allowable bending moment at this location.

5.2.1.11 Analysis Methods For Faulted Conditions

The methods used for the evaluation of the Faulted Conditions are contained in Section 5.2.1.10.

5.2.1.12 Protection Against Environmental Factors

A discussion of the protection provided for the principal components of the RCS against environmental factors is found in Section 3.11.

5.2.1.13 Compliance With Code Requirements

A brief description of the analyses and methods used to assure compliance with the applicable codes is provided in Section 5.2.1.10.

5.2.1.14 Stress Analysis For Faulted Conditions Loadings

The stress analysis used for Faulted Condition Loadings are discussed in Section 5.2.1.10.

5.2.1.15 Stress Levels in Category I Systems

The stress intensity evaluations for the normal, upset, and faulted conditions will show the stress intensities to be below the allowables identified in section 5.2.1.10.7.

5.2.1.16 Analytical Methods for Stresses in Pumps and Valves

The pressure boundary portions of the Class 1 pump in the RCS (the reactor coolant pump) are designed and analyzed according to the requirements of NB-3400. The pressure boundary portions of Class 1 valves in the RCS are designed and analyzed according to the requirements of NB-3500. These valves are identified in Section 3.9.3.2.

5.2.1.17 Analytical Methods for Evaluation of Pump Speed and Bearing Integrity

The reactor coolant pump shaft is designed so that its operating speed is below the first shaft critical speed as discussed in Section 5.5.1.3.6. Reactor coolant pump bearing integrity is discussed in Section 5.5.1.3.4.

5.2.1.18 Operation of Active Valves Under Transient Loadings

The tests and analyses that are performed on active valves to assure operation under transient loadings are described in Section 3.9.3.

5.2.2 Overpressurization Protection

5.2.2.1 Location of Pressure Relief Devices

Pressure relief devices for the Reactor Coolant System (RCS) comprise the three pressurizer safety valves and two power operated relief valves shown in Figure 5.1-1-1; these discharge to the pressurizer relief tank by common header. Other relief valves in containment that discharge to the pressurizer relief tank are itemized in Table 5.2-6.

5.2.2.2 Mounting of Pressure Relief Devices

Westinghouse provides the architect engineer with installation guidelines and suggested physical layout. This information is transmitted to the architect engineer as part of a systems standard design criteria document. The architect engineer is required by Westinghouse to limit the piping reaction loads on the safety valves to acceptable values.

Westinghouse provides mounting brackets on the pressurizer which are used to support the pressurizer safety and relief valves. The architect engineer is responsible for the design and mounting of the supports for these valves. They are also responsible for determining reactions on the pressurizer mounting brackets.

These loads and layouts are transmitted by the architect engineer to Westinghouse for review and acceptability.

5.2.2.3 Report on Overpressure Protection

The pressurizer is designed to accommodate pressure increases (as well as decreases) caused by load transients. The spray system condenses steam to prevent the pressurizer pressure from reaching the setpoint of the power-operated relief valves during a step reduction in power level equivalent to 10% of full rated load.

The spray nozzle is located in the top head of the pressurizer. Spray is initiated when the pressure controlled spray demand signal is above a given setpoint. The spray rate increases proportionally with increasing compensated error signal until it reaches a maximum value. The compensated error signal is the output of PID (Proportional plus Integral plus Derivative) controller, the input to which is an error signal based on the difference between actual pressure and a reference pressure.

The pressurizer is equipped with power-operated relief valves which limit system pressure for a large power mismatch, and thus prevent actuation of the fixed high pressure reactor trip. The relief valves are operated automatically or by remote manual control. The operation of these valves also limits the undesirable opening of the spring-loaded safety valves. Remotely-operated stop valves are provided to isolate the power-operated relief valves if excessive leakage occurs. The relief valves are designed to limit the pressurizer pressure to a value below the high pressure trip

setpoint for all design transients up to and including the design percentage step load decrease with steam dump but without reactor trip.

Isolated output signals from the pressurizer pressure protection channels are used for pressure control. These are used to control pressurizer spray and heaters and power-operated relief valves.

In the event of a complete loss of heat sink, e.g., no steam flow to the turbine, protection of the RCS against overpressure is afforded by pressurizer and steam generator safety valves along with any of the following reactor trip functions:

(1) Reactor trip on turbine trip (if the turbine is tripped)

(2) High pressurizer pressure reactor trip

(3) Overtemperature ΔT reactor trip

(4) Low-low steam generator water level reactor trip

The ASME Code pressure limit is 110% of the 2485 psig design pressure. This limit is not exceeded as discussed in Reference [4]. The report describes in detail the pressure relief devices, location, reliability, and sizing. Transient analysis data is provided for the worst cases that require safety valve actuation as well as those cases which do not.

A detailed functional description of the process equipment associated with the high pressure trip is provided in References [5] and [15].

The upper limit of overpressure protection is based upon the positive surge of the reactor coolant produced as a result of turbine trip under full load, i.e. a 100% load mismatch assuming that the core continues to produce full power. The self-actuated safety valves are sized on the basis of steam flow from the pressurizer to accommodate this surge at a setpoint of 2500 psia and a total accumulation of 3%. The actual installed capacity of the safety valves is always greater than the capacity calculated from the sizing analysis and is indicated so by the ratio of safety valve flow to peak surge rate being greater than 1.0. Note that no credit is taken for the relief capability provided by the power operated relief valves during this surge.

The RCS design and operating pressure together with the safety, power relief and pressurizer spray valve setpoints and the protection system setpoint pressures are listed in Table 5.2-7.

System components whose design pressure and temperature are less than the RCS design limits are provided with overpressure protection devices and redundant isolation means. System discharge from overpressure protection devices is collected in the pressurizer relief tank.

5.2.2.4 RCS Pressure Control During Low Temperature Operation

Administrative procedures are developed to aid the operator in controlling RCS pressure during low temperature operation. However, to provide a backup to the operator and to minimize the frequency of RCS overpressurization, a manually armed, automatic system (commonly referred to as the Cold Overpressure Mitigating System) is provided to mitigate pressure excursions. Allowable pressures are provided in Reference [14], as required by Technical Specifications.

Analyses have shown that one PORV is sufficient to prevent violation of these limits due to anticipated mass and heat input transients.

However, redundant protection against such an overpressurization event is provided through use of two PORVs to mitigate any potential pressure transients. The mitigation system is required only during low temperature operation. It is manually armed and automatically actuated.

5.2.2.4.1 System Operation

Two pressurizer power operated relief valves are supplied with actuation logic to ensure that a redundant and independent RCS pressure control backup feature is provided for the operator during low temperature operations. The actuation logic and relief valves are redundant and independent. The relief valve arming circuit is manually actuated. Each of the two PORVs is supplied with an independent Class 1E power supply. This system provides the capability for RCS inventory letdown, thereby maintaining RCS pressure within allowable limits. Refer to Sections 5.5.7, 5.5.10, 5.5.13, and 9.3.4 for additional information on RCS pressure and inventory control during other modes of operation.

The basic function of the system logic is to continuously monitor RCS temperature and pressure conditions whenever plant operation is at low temperatures. An auctioneered system temperature is continuously converted to an allowable pressure and then compared to the actual RCS pressure. This system logic is first annunciated on a main board alarm whenever the measured pressure approaches within a predetermined amount of the allowable pressure, thereby indicating a pressure transient is occurring. On a further increase in measured pressure with respect to allowable pressure, an actuation signal is transmitted to the power operated relief valves when required to mitigate the pressure transient.

5.2.2.4.2 Pressure Transient Analyses

5.2.2.4.2.1 At-Power Overpressure Transients

For overpressure protection during power operation, the relief valves are provided with sufficient capacity to preclude actuation of the safety valves during normal operational transients, when assuming the following conditions:

(a) Reactor is operating at the licensed core thermal· power level.

(b) RCS and core parameters are at values within normal operating range that produce the highest anticipated pressure.

(c) All components, instrumentation and controls function normally.

The two PORVs are designed to limit the pressurizer pressure to a value below the high-pressure reactor trip setpoint for all design transients up to and including a 50% step load decrease with steam dump actuation. Isolated output signals from the pressurizer pressure protection channels are used to control pressurizer spray and the PORVs in the event of an increase in RCS pressure. The PORVs are pilot actuated valves which respond to pressure signals or to manual control. They provide a means for venting noncondensible gases or steam from the pressurizer which may impair stabilization of the RCS following a design basis event. They also provide a means to depressurize the RCS following a steam generator tube rupture event by reducing primary to secondary break flow as well as increasing safety injection flow to refill the pressurizer.

The pressurizer safety valves prevent RCS pressure from exceeding 110% of system design pressure, in compliance with ASME Nuclear Power Plant Components Code. These are totally enclosed pop-type, spring loaded valves and are self actuated by direct fluid pressure action and back-pressure compensation designed to ASME Boiler and Pressure Code, Section III. The combined capacity of two of the three safety valves is greater than or equal to the maximum surge rate resulting from the complete loss of load due to a turbine trip concurrent with the complete loss of main feedwater, all without a 'reactor trip or any other control.

A rise in coolant temperature can cause an insurge to the pressurizer. Pressurizer spray provides a method to decrease the rate of steam production in the pressurizer as spray injection condenses the steam at a faster rate than it is generated. The spray line enters the pressurizer at the top and terminates in the spray nozzle inside the unit. The spray rate is regulated by a PID controller which has remote overrides. In parallel with the spray valves are manual throttle valves. Temperature sensors in each spray line alert the operator of insufficient bypass flow. The spray rate is selected to prevent pressurizer pressure from reaching the PORV setpoint during a step load reduction of ten percent from full load.

The pressurizer is provided with heaters and their primary function is to heat and maintain water in the pressurizer at the saturation temperature corresponding to the operating pressure. The heaters limit the pressure decrease resulting from a drop in

average coolant temperature which, during unloading, causes an outsurge from the pressurizer. The heaters are actuated automatically during insurges and outsurges and they also have manual overrides.

The function of the pressurizer relief tank (PRT) is to condense and cool the discharge from the pressurizer safety and relief valves. Steam is discharged into the PRT through a sparger pipe under the level of the water. The tank is designed to condense and cool a discharge of steam equal to 110% of the volume above the full-power pressurizer water level set.

5.2.2.4.2.2 Evaluation of Low Temperature Overpressure Transients

10 CFR 50 Appendix G, establishes guidelines and upper limits for RCS primary pressure for low temperature conditions. The mitigation system discussed above satisfies these conditions as discussed in the following paragraphs.

Transient analyses were performed to determine the maximum pressure for the postulated mass input and heat input events.

The most limiting mass input transient is a charging-letdown mismatch in which one Centrifugal Charging Pump is charging water into a water solid reactor coolant system at approximately 485 gpm with the letdown path isolated.

The heat input transient analysis is performed over the entire RCS shutdown temperature range. This analysis assumes an inadvertent reactor coolant pump startup with a 50°F mismatch between the RCS and the temperature of the hotter secondary side of the steam generators.

Both the heat input and mass input analyses took into account the single failure criteria, and therefore, only one power operated relief valve was assumed to be available for pressure relief. The above events have been evaluated considering the allowable pressure/temperature limits provided in Reference [14], as required by Technical Specifications. The evaluation of the transient results conclude that the allowable limits will not be exceeded and therefore will not constitute an impairment to vessel integrity and plant safety.

5.2.2.4.2.3 Operating Basis Earthquake Evaluation

A fluid systems evaluation has been performed considering the potential for overpressure transients following an Operating Basis Earthquake (OBE).

The Watts Bar power operated relief valves have been designed in accordance with the ASME code to provide integrity required for the reactor coolant pressure boundary and qualified in accordance with the Westinghouse Valve Operability Program which is detailed in Section 3.9.3.2. Thus, the Watts Bar cold overpressure mitigation system will function as designed during and after an OBE.

5.2.2.4.3 Administrative Procedures

Although the system described in Section 5.2.2.4.1 is installed to maintain RCS pressure within allowable limits, administrative procedures are used for minimizing the potential for any transient that could actuate the overpressure relief system. The following discussion highlights these procedural controls, listed in hierarchy of their function in preventing RCS cold overpressurization transients.

Of primary importance is the basic method of operation of the plant. Normal plant operating procedures will maximize the use of a pressurizer cushion (steam/nitrogen bubble) during periods of low pressure, low temperature operation. This cushion will dampen the plant's response to potential transient generating inputs, providing easier pressure control with the slower response rates.

An adequate cushion substantially reduces the severity of some pressure transients such as reactor coolant pump induced heat input and slows the rate of pressure rise for others. In conjunction with the previously discussed alarms, this provides reasonable assurance that most potential transients can be terminated by operator action before the overpressure relief system actuates. However, for those modes of operation when water solid operation may still be possible, procedures further highlight precautions that minimize the severity of or the potential for developing an overpressurization transient. The following specific recommendations will be followed:

(1) Do not isolate the residual heat removal inlet lines from the reactor coolant loop unless the charging pumps are stopped. This precaution is to assure there is a relief path from the reactor coolant loop to the residual heat removal suction line relief valves when the RCS is at low pressure and is water solid.

(2) Whenever the plant is water solid and the reactor coolant pressure is being maintained by the low pressure letdown control valve, letdown flow must bypass the normal letdown orifices, and the valve in the bypass line should be in the full open position. During this mode of operation, the three letdown orifices must also remain open.

(3) If the reactor coolant pumps have stopped for more than 5 minutes during plant heatup, and the reactor coolant temperature is greater than the charging and seal injection water temperature, do not attempt to restart a pump unless a steam bubble is formed in the pressurizer. This precaution will minimize the pressure transient when the pump is started and the cold water previously injected by the charging pumps is circulated through the warmer reactor coolant components. The steam bubble will accommodate the resultant expansion as the cold water is rapidly warmed.

(4) If the reactor coolant pumps are stopped and the reactor coolant system is being cooled down by the residual heat exchangers, a non-uniform temperature distribution may occur in the reactor coolant loops. Do not attempt to restart a reactor coolant pump unless a steam bubble is formed in the pressurizer.

(5) During plant cooldown, the steam generators should be connected to the steam header to assure a uniform cooldown of the reactor coolant loops.

(6) At least one reactor coolant pump must remain in service until the reactor coolant temperature is reduced to 160°F.

These special precautions backup the normal operational mode of maximizing periods of steam bubble operation so that cold overpressure transient prevention or reduction is continued during periods of transitional operations.

The specific plant configurations of ECCS testing and alignment will also require procedures to prevent developing cold overpressurization transients. During these limited periods of plant operation, the following procedures will be followed:

(1) To preclude inadvertent ECCS actuation during heatup and cooldown, procedures will require blocking the low pressurizer pressure, and low steam pressure safety injection signal actuation logic below permissive P-11 (reference Table 7.3-3).

(2) During further cooldown, closure and power lockout of the accumulator isolation valves will be performed at 1000 psig, 425°F RCS conditions and power lockout of all but one charging pump will be performed when RCS cold leg temperatures are ≤ 350°F, providing additional backup to step 1, above.

(3) The procedure for periodic ECCS pump performance testing will be to test the pumps during normal power operation or at hot shutdown conditions when possible. This precludes any potential for developing a cold overpressurization transient. When cold shutdown testing of the charging pump is necessary, the procedures will require the following precautions:

(a) Test data will be taken on the charging pump in normal service and the other charging pumps will not be operating, or

(b) The charging pump discharge valve will be closed to isolate pump input to the RCS and the RHRS will be aligned to provide backup benefit of the RHRS relief valve.

(4) 'S' signal circuitry testing during cold shutdown will also require RHRS alignment, charging pump power lockout or discharge valve closure to preclude developing cold overpressurization transients.

The above procedural requirements covering normal operations with a steam bubble, transitional operations where potentially water solid, followed by specific testing operations provide in-depth cold overpressure preventions or reductions, augmenting the installed overpressure relief system.

5.2.3 General Material Considerations

5.2.3.1 Material Specifications

Material specifications used for the principal pressure retaining applications in each component comprising the Reactor Coolant Pressure Boundary (RCPB) are listed in Table 5.2-8 for ASME Class 1 Primary Components and Table 5.2-9 for ASME Class 1 and 2 Auxiliary Components. The materials are procured in accordance with the material specification requirements and include the special requirements of the ASME Boiler and Pressure Vessel Code, Section III, plus Addenda and Code Cases as are applicable and appropriate to meet 1O CFR 50 Appendix B. It should be noted that these material specifications are typical for the listed applications.

The welding materials used for joining the ferritic base materials of the RCPB conform to or are equivalent to ASME Material Specifications SFA 5.1, 5.2, 5.5, 5.17, 5.18 and 5.20. They are tested and qualified to the requirements of ASME Section III rules. In addition the ferritic materials of the reactor vessel beltline are restricted to the following maximum limits of copper, phosphorous and vanadium to reduce sensitivity to irradiation embrittlement in service:

Element	Base Metal(%)	As Deposited Weld Metal(%)
Copper	0.10 (Ladle)	0.10
	0.12 (Check)	
Phosphorous	0.012 (Ladle)	0.015
	0.017 (Check)	
Vanadium	0.05 (Check)	0.05 (as residual)

These limits were met for all beltline materials with the exception of the Unit 1 intermediate shell forging, which exhibited a value of 0.17% for copper.

The welding materials used for joining the austenitic stainless steel base materials of the RCPB conform to ASME Material Specifications SFA 5.4 and 5.9. They are tested and qualified to the requirements of ASME Section III rules.

The welding materials used for joining nickel-chromium-iron alloy in similar base material combination and in dissimilar ferritic or austenitic base material combination conform to ASME Material Specifications SFA 5.11 and 5.14. They are tested and qualified to the requirements of ASME Section III rules and are used only in procedures which have been qualified to these same rules.

5.2.3.2 Compatibility With Reactor Coolant

The ferritic low alloy and carbon steels which are used in pressure retaining applications are generally provided with corrosion resistant cladding on all surfaces

that are exposed to the reactor coolant [18]. This cladding material has a chemical analysis which is at least equivalent to the corrosion resistance of Types 304 and 316 austenitic stainless steel alloys or nickel-chromium-iron alloy, martensitic stainless steel and precipitation hardened stainless steel. Ferritic low alloy and carbon steel nozzles are safe ended with either stainless steel wrought materials, stainless steel weld metal analysis A-7, or nickel-chromium iron alloy weld metal F-Number 43. The latter buttering material requires further safe ending with austenitic stainless steel base material after completion of the post weld heat treatment when the nozzle is larger than a 4 inch nominal inside diameter and/or the wall thickness is greater than 0.531 inches.

The cladding on ferritic type base materials receives a post weld heat treatment.

All of the austenitic stainless steel and nickel-chromium-iron alloy base materials with primary pressure retaining applications are used in the solution anneal heat treat condition. These heat treatments are as required by the material specifications.

During subsequent fabrication, these materials are not heated above 800°F other than locally by welding operations. The solution annealed surge line material is subsequently formed by hot bending followed by a resolution annealing heat treatment. All other pipe bending is outside of Westinghouse Pressurized Water Reactor (PWR) Scope.

5.2.3.3 Compatibility With External Insulation and Environmental Atmosphere

In general, all of the materials listed in Tables 5.2-8 and 5.2-9 which are used in pressure retaining applications and which are subject to elevated temperature during system operation are in contact with thermal insulation that covers their outer surfaces.

The thermal insulation used on the reactor coolant pressure boundary is the reflective stainless steel type or stainless steel jacketed, hydrophobic grade, mass-type insulation. The latter type is only used, as required, to avoid interferences with electrical cable and components.

In the event of coolant leakage, the ferritic materials will show increased general corrosion rates. Where minor leakage is anticipated from service experience, such as valve packing, pump seals, etc., only materials which are compatible with the coolant are used. These are as shown in Tables 5.2-8 and 5.2-9. Ferritic materials exposed to coolant leakage can be readily observed as part of the inservice visual and/or nondestructive inspection program to assure the integrity of the component for subsequent service.

5.2.3.4 Chemistry of Reactor Coolant

The reactor coolant system (RCS) chemistry specifications are given in Table 5.2-10.

The RCS water chemistry is selected to minimize corrosion. A periodic analysis of the coolant chemical composition is performed to verify that the reactor coolant quality meets the specifications.

The chemical and volume control system provides a means for adding chemicals to the RCS. This controls the pH of the coolant during initial startup and subsequent operation, scavenges oxygen from the coolant during startup, controls the oxygen level of the coolant due to radiolysis during all power operations subsequent to startup, and modifies the primary system corrosion film layer. The Reactor Coolant water chemistry specifications are shown in Table 5.2-10.

The pH control chemical employed is Lithium-7 hydroxide. This chemical is chosen for its compatibility with the materials and water chemistry of borated-water/stainless steel/zirconium/ inconel systems. In addition, lithium is produced in solution from the neutron irradiation of the dissolved boron in the coolant. The Lithium-7 hydroxide is introduced into the RCS via the charging flow. The concentration of Lithium-7 hydroxide in the RCS is maintained in the range specified for pH control. If the concentration exceeds this range, the cation bed demineralizer is employed in the letdown line in series operation with the mixed bed demineralizer. Since the amount of lithium to be removed is small and its buildup can be readily calculated and determined by analysis, the flow through the cation bed demineralizer is not required to be full letdown flow.

During reactor startup, hydrazine or dissolved hydrogen may be used to scavenge oxygen. The hydrazine solution is introduced into the RCS via the CVCS chemical mixing tank.

Dissolved hydrogen is employed to control and scavenge oxygen produced due to radiolysis of water in the core region. Sufficient partial pressure of hydrogen is maintained in the volume control tank such that the specified equilibrium concentration of hydrogen is maintained in the reactor coolant. A self-contained pressure control valve maintains a minimum pressure in the vapor space of the volume control-tank. This can be adjusted to provide the correct equilibrium hydrogen concentration.

Components with stainless steel sensitized in the manner expected during component fabrication and installation will operate satisfactorily under normal plant chemistry conditions in PWR systems because chlorides, fluorides and oxygen are controlled to very low levels.

During power operation when zinc addition is desired, an aqueous solution of zinc acetate is injected into the RCS via the sample system return line to the VCT for reducing radionuclide content in the primary system corrosion films. Residual zinc level is maintained at 2 - 8 ppb nominal. Cobalt, nickel, and zinc are removed from the RCS by the mixed bed demineralizers via normal letdown. A flow limit of less than or equal to 8 mL/min. is required.

5.2.4 Fracture Toughness

5.2.4.1 Compliance With Code Requirements

Assurance of adequate fracture toughness of the ferritic materials in the reactor vessel is provided by compliance with Section III of the 1971 addenda. WBNP was designed and constructed before the present requirements of ASME III, Paragraph NB-2300, as

augmented by 10 CFR 50 Appendix G, were in force. The fracture toughness of the reactor vessel materials were therefore assessed by using methods of the Regulatory Review Plan Branch Technical Position MTEB5-2, "Fracture Toughness Requirements for Older Plants." A summary of the fracture toughness data for the Unit 1 and Unit 2 reactor pressure vessel materials is given in Tables 5.2-11a and 5.2-11b, respectively.

5.2.4.2 Acceptable Fracture Energy Levels

Initial upper shelf fracture energy levels for materials of the Reactor Vessel Beltline Region (including welds), as determined by Charpy-V-Notch Test on specimens oriented in the tangential and axial directions of the base material, are established for the reactor vessel irradiation surveillance test program. The surveillance program monitors the material properties of the beltline region to assure that adequate fracture toughness is maintained.

5.2.4.3 Operating Limitations During Startup and Shutdown

Startup and shutdown operating limitations are based on the properties of the core region materials of the reactor pressure vessel[6]. Actual material property test data is used. The methods outlined in Appendix G to Section XI of the ASME Code will be employed for the shell regions in the analysis of protection against non-ductile failure. The initial operating curves are calculated assuming a period of reactor operation such that the beltline material will be limiting. The heatup and cooldown curves are given in the Pressure and Temperature Limits Report (PTLR)[14] required by the Technical Specifications. Beltline material properties degrade with radiation exposure, and this degradation is measured in terms of the adjusted reference nil-ductility temperature which includes a reference nil-ductility temperature shift (ΔRT_{NDT}).

Predicted ΔRT_{NDT} values are derived using two curves: the effect of fluence and copper and nickel content on the shift of ΔRT_{NDT} for the reactor vessel steels exposed to 550°F temperature curve, and the maximum fluence at 1/4 T (thickness) and 3/4 T locations (tips of the code reference flaw when the flaw is assumed at inside diameter and outside diameter locations, respectively) curve. For a selected time of operation, this shift is assigned a sufficient magnitude so that no unirradiated ferritic materials in other components of the reactor coolant system are limiting in the analysis. Based on copper and nickel content and initial RT_{NDT}, the intermediate forging is determined to be limiting for Unit 1. The limiting material for Unit 2 is the intermediate forging through 7 EFPY.

The operating curves including pressure-temperature limitations are calculated in accordance with methodology referenced in the PTLR. Changes in fracture toughness of the core region forgings, weldments and associated heat affected zones due to radiation damage will be monitored by a surveillance program which is based on ASTM E-185-82, "Recommended Practice for Surveillance Tests for Nuclear Reactor Vessels" and 10 CFR Part 50, Appendix H. The Reactor Vessel Irradiation Surveillance Program is in compliance with these documents with the exception that all of the reactor vessel irradiation surveillance capsules will receive a fluence which is at least 4 times the maximum reactor vessel fluence. The above documents

recommend that the capsule to vessel maximum fluence not exceed a lead factor of 3.0. At the time of the design of the surveillance program, all capsules were positioned as near to the vessel wall as possible and were limited to a fluence less than 3 times the vessel fluence. Recently a more accurate method of calculating vessel and capsule fluence has been developed which results in a lead factor of at least 4.0 for all of the capsules which are in violation of the above documents. This violation is not considered to be of any significant consequence since the test results from the encapsulated specimens will represent the actual behavior of the material in the vessel and, therefore, the evaluation of the effects of radiation on the actual vessel material will not be influenced by the larger lead factor.

The evaluation of the radiation damage in this surveillance program is based on pre-irradiation testing of Charpy V-notch and tensile specimens and post-irradiation testing of Charpy V-notch, tensile, and 1/2 T compact tension specimens as required. The post-irradiation testing will be carried out during the lifetime of the reactor vessel. Specimens are irradiated in capsules located near the core midheight and removable from the vessel at specified intervals.

The results of the radiation surveillance program will be used to verify that the ΔT_{NDT} predicted from the effects of the fluence, copper content, and nickel content is valid. The results of the radiation surveillance program will also be used to make any changes necessary to the Pressure-Temperature (P-T) Limit curves for preservice hydrotests and P-T limit curves for inservice leak and hydrotests. These curves will be calculated in accordance with 10 CFR 50, Appendix G and ASME Section XI, Appendix G.

The 10 CFR 50.61 specifies screening criteria of 270°F for base materials and axial welds and 300°F for circumferential welds, and requires that projected reference temperatures (RT_{PTS}s) be calculated and evaluated to these criteria. The RT_{PTS}s are projected for the inner vessel surfaces of the limiting beltline materials from the time of FSAR submittal to the expiration date of the operating license. The basis for these projections is as follows.

RT_{PTS} projections for beltline materials are sensitive to copper and nickel content and initial RT_{NDT}. The copper and nickel contents and initial RT_{NDT}s for Units 1 and 2 beltline materials are provided in Tables 5.2-11a and 5.2-11b.

Unit	Material Description	Cu[(a)] (%)	Ni[(a)] (%)	I-RT_{NDT}[(a, b)] (°F)
1	Intermediate Shell Forging 05	0.17	0.80	47
	Lower Shell Forging 04	0.08	0.83	5
	Circumferential Weld, W05	0.05	0.70	-43
2	Intermediate Shell Forging 05	0.05	0.78	14
	Lower Shell Forging 04	0.05	0.81	5
	Circumferential Weld, W05	0.05	0.70	-50

(a) Analysis conducted by Rotterdam Dockyard Company.

(b) Values based on results of Charpy tests (WCAPs 9298 and 9455) and drop weight tests performed at the Rotterdam Dockyard Company. I-RT_{NDT} is the initial RT_{NDT} prior to irradiation of the reactor vessel.

(Note: The above data is from Reference [13].)

The projected RT_{PTS}s are also a function of accumulated neutron fluence at the inner surface of the beltline materials. The best estimate peak neutron fluence at the inner surface for the end-of-life (expiration of operating license) is taken to be 3.18 x 10^{19} n/cm^2 (E > 1.0 MeV) for Unit 1 and 3.17 x 10^{19} n/cm^2 (E > 1.0 MeV) for Unit 2 [15]. Based on a 40-year design life and an 80% capacity factor, end-of-life is taken to be 32 effective full power years (EFPY). Therefore, the best-estimate peak neutron fluence at the inner surface per EFPY is 9.94 x 10^{17}n/cm^2 for Unit 1 and 9.91 x 10^{17}n/cm^2 for Unit 2.

The projected RT_{PTS}s [15] for WBN Unit 1 intermediate forging and Unit 2 beltline materials were determined by using Equation 1 in the processes described in 10 CFR 50.61, paragraph (b)(2), and the resulting values are presented as follows:

	RT_{PTS}(°F)		
Material	**0 EFPY**	**3 EFPY**	**32 EFPY**
Unit 1 - Intermediate Forging	81	169	253
Unit 2 - Intermediate Forging	---	---	88
Unit 2 - Lower Shell Forging	---	---	79
Unit 2 - Intermediate to Lower Shell Circ. Weld Seam	----	----	95

The projected end-of-life RT_{PTS}s meets the screening criteria of 270°F for forgings and 300°F for welds. Therefore, no further action is required until changes in core loadings, surveillance measurements, or other information indicate a need for updated projections.

5.2.5 Austenitic Stainless Steel

The unstabilized austenitic stainless steel material specifications used for the 1) Reactor Coolant Pressure Boundary (RCPB), 2) systems required for reactor shutdown, and 3) systems required for emergency core cooling are listed in Tables 5.2-8 and 5.2-9.

The unstabilized austenitic stainless steel material for the reactor vessel internals which are required for emergency core cooling for any mode of normal operation or under postulated accident conditions and for core structural load bearing members are listed in Table 5.2-12.

All of the above tabulated materials are procured in accordance with the material specification requirements and include the special requirements of the ASME code, Section III, plus Addenda and Code Cases as are applicable to meet 10 CFR 50 Appendix B.

5.2.5.1 Cleaning and Contamination Protection Procedures

It is required that all austenitic stainless steel materials used in the fabrication, installation and testing of nuclear steam supply components and systems be handled, protected, stored and cleaned according to recognized and accepted methods which are designed to minimize contamination which could lead to stress corrosion cracking. The rules covering these controls are stipulated in the Westinghouse Electric Corporation process specifications. As applicable these process specifications supplement the equipment specifications and purchase order requirements of every individual austenitic stainless steel component or system which Westinghouse procures for a Nuclear Steam Supply System (NSSS), regardless of the ASME Code Classification. They are also given to the architect and to the owner of the power plant for use within their scope of supply and activity to assure compliance with the ANSI 45 committee specifications.

To assure that manufacturers and installers adhere to the requirements of these specifications, surveillance of operations by Westinghouse personnel is conducted either in residence at the manufacturer's plant and the installer's construction site or, when residency is not practical, during periodic engineering and quality assurance visitations and audits at these locations. Any deviation from these rules requires corrective action.

The process specifications which define these requirements and which are in compliance with The American National Standards Institute N-45 Committee specifications are as follows:

Process Number	Specification
82560HM	Requirements for Pressure Sensitive Tapes for use on Austenitic Stainless Steels.
83336KA	Requirements for Thermal Insulation Used on Austenitic Stainless Steel Piping and Equipment.
83860LA	Requirements for Marking of Reactor Plant Components and Piping.
84350HA	Site Receiving Inspection and storage Requirements for Systems, Material and Equipment.
84351NL	Determination of Surface Chloride and Fluoride on Austenitic Stainless Steel Materials. TVA will apply this specification to piping with an operating temperature above 140°F and will use the acceptance standards of Paragraph 4.3.2 of RDT-F5-1T of January 1978, for halogen contamination.

Process Number	Specification
85310QA	Packaging and Preparing Nuclear Components for Shipment and Storage.
292722	Cleaning and Packaging Requirements of Equipment for use in the NSSS.
597756	Pressurized Water Reactor Auxiliary Tanks Cleaning Procedures.
597760	Cleanliness Requirements During Storage Construction, Erection and Start-Up Activities of Nuclear Power Systems. TVA will apply this specification to piping which exceeds 200 °F at any time during normal or accident conditions.

5.2.5.2 Solution Heat Treatment Requirements

The austenitic stainless steels listed in Tables 5.2-8, 5.2-9, and 5.2-12 are utilized in the final heat treated condition required by the respective ASME Code Section II material specification for the particular type or grade of alloy.

5.2.5.3 Material Inspection Program

The Westinghouse practice is that austenitic stainless steel materials of product forms with single shapes need not be corrosion tested provided that the solution heat treatment is followed by water quenching. Simple shapes are defined as all plates, sheets, bars, pipe and tubes, as well as forgings, fittings, and other shaped products which do not have inaccessible cavities or chambers that would preclude rapid cooling when water quenched. When testing is required, the tests are performed in accordance with ASTM A 262-70, Practice A or E, as amended by Westinghouse Process Specification 84201 MW.

5.2.5.4 Unstablilized Austenitic Stainless Steels

The unstabilized austenitic stainless steels used in the RCPB and components are listed in Tables 5.2-8 and 5.2-9.

The materials are used in the as-welded condition as discussed in Section 5.2.5.2. The control of the water chemistry is stipulated in Section 5.2.3.4.

5.2.5.5 Prevention of Intergranular Attack of Unstabilized Austenitic Stainless Steels

Unstabilized austenitic stainless steels are subject to intergranular attack (IGA) provided that three conditions are present simultaneously. These are:

(1) An aggressive environment, e.g., an acidic aqueous medium containing chlorides or oxygen.

(2) A sensitized steel.

(3) A high temperature.

If any one of the three conditions described above is not present, intergranular attack will not occur. Since high temperatures cannot be avoided in all components in the NSSS, Westinghouse relies on the elimination of conditions 1 and 2 to prevent intergranular attack on wrought stainless steel components.

The water chemistry in the reactor coolant system of a Westinghouse Pressurized Water Reactor (PWR) is rigorously controlled to prevent the intrusion of aggressive species. In particular, the maximum permissible oxygen and chloride concentrations are 0.10 ppm and 0.15 ppm, respectively. Reference [7] describes precautions taken to prevent the intrusion of chlorides into the system during fabrication, shipping, and storage. The use of hydrogen overpressure precludes the presence of oxygen during operation. The effectiveness of these controls has been, demonstrated by both laboratory tests and operating experience. The long time exposure of severely sensitized stainless in early plants to PWR coolant environments has not resulted in any sign of intergranular attack. Reference [7] describes the laboratory experimental findings and the Westinghouse operating experience. The additional years of operations since the issuing of Reference [7] have provided further confirmation of the earlier conclusions. Severely sensitized stainless steels do not undergo any intergranular attack in Westinghouse PWR coolant environments.

In spite of the fact that no evidence exists that PWR coolant water attacks sensitized stainless steels, Westinghouse considers it good metallurgical practice to avoid the use of sensitized stainless steels in the NSSS components. Accordingly, measures are taken to prohibit the purchase of sensitized stainless steels and to prevent sensitization during component fabrication. Wrought austenitic stainless steel stock used for components that are part of (1) the reactor coolant pressure boundary, (2) systems required for reactor shutdown, (3) systems required for emergency core cooling, and (4) reactor vessel internals that are relied upon to permit adequate core cooling for normal operation or under postulated accident conditions is utilized in one of the following conditions:

(1) Solution annealed and water quench

(2) Solution annealed and cooled through the sensitization temperature range within less than approximately five minutes.

It is generally accepted that these practices will prevent sensitization. Westinghouse has verified this by performing corrosion tests (ASTM 393) on as-received wrought material.

Westinghouse recognizes that the heat affected zones of welded components must, of necessity, be heated into the sensitization temperature range, 800 to 1800°F. However, severe sensitization, i.e., continuous grain boundary precipitates of chromium carbide, with adjacent chromium depletion, can still be avoided by control of welding parameters and welding processes. The heat input* and associated cooling rate through the carbide precipitation range are of primary importance, Westinghouse has demonstrated this by corrosion testing a number of weldments.

Of 25 production and qualification weldments tested, representing all major welding processes, and a variety of components, and incorporating base metal thicknesses from 0.10 to 4.0 inches, only portions of two were severely sensitized. Of these, one involved a heat input of 120,000 joules, and the other involved a heavy socket weld in relatively thin walled material. In both cases, sensitization was caused primarily by high heat inputs relative to the section thickness. However, in only the socket weld did the sensitized condition exist at the surface, where the material is exposed to the environment. This component has been redesigned to eliminate this weld.

Westinghouse controls the heat input in all austenitic pressure boundary weldments by:

---

* Heat input is calculated according to the following formula:

$$H = \frac{(E)(I)(60)}{S}$$

where:

H = Joules/in

E = volts

I = Amperes

S = Travel Speed in inches/minute.

(1) Prohibiting the use of block welding.

(2) Limiting the maximum interpass temperature to 350°F.

(3) Exercising approval rights on all welding procedures.

To assure that these controls are effective in preventing sensitization, Westinghouse will, if necessary, conduct additional intergranular corrosion tests of qualification mock-ups of primary pressure boundary and core internal component welds, including the following:

Reactor Vessel Safe Ends
Pressurizer Safe Ends
Surge Line and Reactor Coolant Pump Nozzles
Control Rod Drive Mechanisms Head Adapters
Control Rod Drive Mechanisms Seal Welds
Control Rod Extensions
Lower Instrumentation Penetration Tubes

Primary boundary weldments that are not capable of passing ASTM 393 or ASTM 262, Practice A or E, as modified by Westinghouse Process Specification 84201 MW, will be requalified utilizing either low heat inputs or a material substitution.

To summarize, Westinghouse has a four point program designed to prevent intergranular attack of austenitic stainless steel components.

(1) Control of primary water chemistry to ensure a benign environment.

(2) Utilization of materials in the final heat treated condition and the prohibition of subsequent heat treatments in the 800 to 1800°F temperature range.

(3) Control of welding processes and procedures to avoid heat affected zone (HAZ) sensitization.

(4) Confirmation that the welding procedures used for the manufacture of components in the primary pressure boundary and of reactor internals do not result in the sensitization of heat affected zones.

Both operating experience and laboratory experiments in primary water have conclusively demonstrated that this program is 100% effective in preventing intergranular attack in Westinghouse NSSS's utilizing unstabilized austenitic stainless steel.

5.2.5.6 Retesting Unstabilized Austenitic Stainless Steel Exposed to Sensitization Temperatures

It is not normal Westinghouse practice to expose unstabilized austenitic stainless steels to the sensitization range of 800 to 1800°F during fabrication into components except as described in Section 5.2.3.2. If, during the course of fabrication, the steel is inadvertently exposed to the sensitization temperature range, 800 to 1800°F, the material may be tested in accordance with ASTM A393 or A262, as amended by Westinghouse Process Specification 84201 MW, to verify that it is not susceptible to intergranular attack, except that testing is not required for:

(1) Cast metal or weld metal with a ferrite content of 5% or more

(2) Material with a carbon content of 0.03% or less that is subjected to temperatures in the range of 800 to 1800°F for less than one hour

(3) Material exposed to special processing provided the processing is properly controlled to develop a uniform product and provided that adequate documentation exists of service experience and/or test data to demonstrate that the processing will not result in increased susceptibility to intergranular stress corrosion.

If it is not verified that such material is not susceptible to intergranular attack, the material will be resolution annealed and water quenched or rejected.

5.2.5.7 Control of Delta Ferrite in Austenitic Stainless Steel Welding

Regulatory Guide 1.31, Control of Ferrite Content in Stainless Steel Weld Metal, describes a method for implementing the requirements of 10 CFR 50 Appendix A (GDC 1) and 10 CFR 50 Appendix B with regard to control of welding austenitic stainless steel components and systems. The Interim Regulatory Position on this guide, March 1974, describes an alternative method of control. The following paragraphs describe the methods to be used and the verification of these methods for austenitic stainless steel welding on this application.

The welding of austenitic stainless steel is controlled to mitigate the occurrence of microfissuring or hot cracking in the weld. Although published data and experience have not confirmed that fissuring is detrimental to the quality of the weld, it is recognized that such fissuring is undesirable in a general sense. Also, it has been well documented in the technical literature that the presence of delta ferrite is one of the mechanisms for reducing the susceptibility of stainless steel welds to hot cracking. However, there is insufficient data to specify a minimum delta ferrite level below which the material will be prone to hot cracking. It is assumed that such a minimum lies somewhere between 0 and 3% delta ferrite.

The scope of these controls discussed herein encompasses welding processes used to join stainless steel parts in components designed, fabricated or stamped in accordance with ASME Boiler and Pressure Vessel Code, Section III Class 1, 2, and core support components. Delta ferrite control is appropriate for the above welding requirements except where no filler metal is used or for other reasons such control is not applicable. These exceptions include electron beam welding, autogenous gas shielded tungsten arc welding, explosive welding, and welding using fully austenitic welding materials.

The fabrication and installation specifications require welding procedure and welder qualification in accordance with Section III, and include the delta ferrite-determinations for the austenitic stainless steel welding materials that are used for welding qualification testing and for production processing. Specifically, the undiluted weld deposits of the "starting" welding materials are required to contain a minimum of 5% delta ferrite (The equivalent ferrite number may be substituted for percent delta ferrite.) as determined by chemical analysis and calculation using the appropriate weld metal constitution diagrams in Section III. When new welding procedure qualification tests are evaluated for these applications, including repair welding of raw materials, they are performed in accordance with the requirements of Sections III and IX.

The results of all the destructive and non-destructive tests are reported in the procedure qualification record in addition to the information required by Section III.

The "starting" welding materials used for fabrication and installation welds of austenitic stainless steel materials and components meet the requirements of Section III. The austenitic stainless steel welding material conforms to ASME weld metal analysis A-7, Type 308 for all applications except Type 308L weld metal analysis may be substituted for consumable inserts when used for weld root closures. Bare weld filler metal, including consumable inserts used in inert gas welding processes, conform to ASME

SFA-5.9, and are procured to contain not less than 5% delta ferrite according to Section III. Weld filler metal materials used in flux shielded welding processes conform to ASME SFA-5.4 or SFA-5.9 and are procured in a wire-flux combination to be capable of providing not less than 5% delta ferrite in the deposit according to Section III. Welding materials are tested using the welding energy inputs to be employed in production welding.

Combinations of approved heats and lots of "starting" welding materials are used for all welding processes. The welding quality assurance program includes identification and control of welding material by lots and heats as appropriate. All of the weld processing is monitored according to approved inspection programs which include review of "starting" materials, qualification records and welding parameters. Welding systems are also subject to quality assurance audit including calibration of gages and instruments; identification of "starting" and completed materials; welder and procedure qualifications; availability and use of approved welding and heat treating procedures; and documentary evidence of compliance with materials, welding parameters and inspection requirements. Fabrication and installation welds are inspected using non-destructive examination methods according to Section III rules.

To further assure the reliability of these controls, Westinghouse has initiated a verification program to last for at least one year [8]. Reference [8] presents the Westinghouse delta ferrite verification program. The proposed program has been approved as a valid approach to verify the Westinghouse hypothesis and is considered an acceptable alternative to production weld testing for conformance with the NRC Interim Position on Regulatory Guide 1.31. The Regulatory Staff's acceptance letter and topical report evaluation were received on December 30, 1974.

It should be noted that the criteria discussed above concerning delta ferrite determinations were incorporated in the Watts Bar components that were involved in the Westinghouse verification program; these components cannot necessarily be identified. Those components not involved in the verification program were fabricated in accordance with the applicable ASME code requirements, which do not include delta ferrite determinations. Therefore, the delta ferrite determinations performed on the Watts Bar components are in addition to the applicable ASME Code requirements.

5.2.6 Pump Flywheels

The integrity of the reactor coolant pump flywheel is assured on the basis of the following design and quality assurance procedures.

5.2.6.1 Design Basis

The calculated stresses at operating speed are based on stresses due to centrifugal forces. The stress resulting from the interference fit of the flywheel on the shaft is less than 2000 psi at zero speed, but this stress becomes zero at approximately 600 rpm because of radial expansion of the hub. The primary coolant pumps run at approximately 1190 rpm and may operate briefly at overspeeds up to 109% (1295 rpm) during loss of outside load. For conservatism, however, 125% of operating speed was

selected as the design speed for the primary coolant pumps. The flywheels are given a preoperational test of 125% of the maximum synchronous speed of the motor.

5.2.6.2 Fabrication and Inspection

The flywheel consists of two thick plates bolted together. The flywheel material is produced by a process that minimizes flaws in the material and improves its fracture toughness properties, such as vacuum degassing, vacuum-melting, or electroslag remelting. Each plate is fabricated from A533, Grade B, Class 1 steel. Supplier certification reports are available for all plates and demonstrate the acceptability of the flywheel material on the basis of the requirements of Regulatory Guide 1.14.

Flywheel blanks are flame-cut from the A533, Grade B, Class 1 plates with at least 1/2 inch of stock left on the outer and bore radii for machining to final dimensions. The finished machined bores, keyways, and drilled holes are subjected to magnetic particle or liquid penetrant examinations. The finished flywheels are subjected to 100% volumetric ultrasonic inspection per Paragraphs NB-2532.1 and NB-2532.2 of the ASME, Section III, Boiler and Pressure Vessel Code.

5.2.6.3 Acceptance Criteria and Compliance with Regulatory Guide 1.14

The reactor coolant pump motor flywheel conforms to the following material acceptance criteria.

(1) The Nil-Ductility Transition Temperature (NDTT) of the flywheel material has been obtained by two drop weight tests (DWT) which demonstrate that the flywheel will exhibit "no-break" performance at 20°F in accordance with ASTM E-208. The above drop weight tests demonstrate that the NDTT of the flywheel material is no higher than 10°F.

(2) A minimum of three Charpy V-notch impact specimens from each plate have been tested at ambient (70°F) temperature in accordance with the specification ASTM E-23. The Charpy V-notch (Cv) energy in both the parallel and normal orientation with respect to the rolling direction of the flywheel material was at least 50 foot pounds at 70°F to demonstrate compliance with Regulatory Guide 1.14. A lower bound K_{ID} reference curve (see Figure 5.2-4) has been constructed from dynamic fracture toughness data generated in A533, Grade B, Class 1 steel[9]. All data points are plotted on the temperature scale relative to the NDTT. The construction of the lower bound curve below which no single test point falls, combined with the use of dynamic data when flywheel loading is essentially static, together represent a large degree of conservatism. Reference of this curve to the guaranteed NDTT of +10°F indicates that, at the predicted fly-wheel operating temperature of 110°F, the minimum fracture toughness is in excess of 100 ksi-in$^{1/2}$. This conforms to the Regulatory (Safety) Guide 1.14 requirement that the dynamic stress intensity factor must be at least 100 ksi-in$^{1/2}$.

Precautionary measures taken to preclude missile formation from primary coolant pump components, assure that the pumps will not produce missiles under any

anticipated accident condition. Each component of the primary pump motors was analyzed for missile generation. Any fragments of the motor rotor would be contained by the heavy stator. The same conclusion applies to the pump impeller because the small fragments that might be ejected would be contained by the heavy case.

Thus, it is concluded that flywheel plate materials are suitable for use and meets Regulatory Guide 1.14 acceptance criteria on the bases of suppliers certification data.

5.2.7 RCPB Leakage Detection Systems

The leakage detection systems comply with the intent of NRC General Design Criterion 30 and Regulatory Guide 1.45. These systems provide a means of detecting, to the extent practical, leakage from the Reactor Coolant Pressure Boundary (RCPB).

5.2.7.1 Collection of Identified Leakage

The leakage within the containment that is expected from components of the RCPB that cannot practically be made completely leaktight is piped off to tanks. The flow rate from these components is established by a reactor coolant water inventory balance and tank level monitors.

Leakage from most of the valve stems is piped to the pressurizer relief tank. A few stem leakoffs are piped to the reactor coolant drain tank (RCDT). Some valves may have their leakoff line connections plugged after the packing has been upgraded with graphite packing rings. This packing configuration will reduce stem leakage to essentially zero. The tank levels can be monitored to determine total inflow. Individual valve leakage is not monitored.

The pressurizer relief tank is equipped with two level transmitters (100 inch span) which indicate continuously and alarm in the Main and Auxiliary Control Rooms on high and low water levels. The level indicators provide the ability to observe a 10 gpm leak rate into the tank in about 15 minutes. Reduction of the water level in the pressurizer relief tank is manually initiated and is accomplished by using the reactor coolant drain tank pumps.

The level of the RCDT is indicated continuously and alarmed on high and low level on a panel in the Auxiliary Building. The level indicator provides the ability to observe a 10 gpm inflow in about one minute. The level of the RCDT is automatically controlled between the high and low alarm setpoints by the RCDT pumps. Valve stem leakage is expected to be within 1 cc/hr per inch of valve stem diameter.

Flow past the reactor coolant pump No. 1 seal returns to the Chemical and Volume Control System (CVCS). A temperature detector is located in the seal leakoff flowpath downstream of the No. 1 seal of each reactor coolant pump. A temperature indicator for each detector and a common temperature alarm is provided in the Main Control Room. The No. 2 seal leakoff drains first to a standpipe which has a controlled (in-line orifice) leakoff near the top of the standpipe which is piped to the RCDT. The standpipe is equipped with high and low level sensors which alarm in the main control room. The standpipe also maintains a head of water on the No. 3 seal. A high or low level alarm would indicate excessive leakage from No. 2 and/or No. 3 seal. The leakoff

for the No. 3 seal also drains to the RCDT. Figure 9.3-15, Sheet 7, illustrates the instrumentation for the reactor coolant pumps.

Leakage from the reactor vessel main flange flows between the double O-ring seal to the vessel O-ring leakoff line and is piped to the reactor coolant drain tank. This line is provided with a temperature sensor that alarms in the Main Control Room.

Leakage from safety and relief valves is piped to the pressurizer relief tank. Each safety valve line and the relief valve lines are provided with a temperature sensor that initiates a high temperature alarm in the MCR when an excessively high leakage rate is detected.

The pressurizer relief tank has level sensors that indicate and alarm in the MCR. This tank is periodically drained to the RCDT. This tank is periodically pumped out to various holdup tanks.

Limits for reactor coolant leakage rates are described in the Technical Specifications.

5.2.7.2 Unidentified Leakage to Containment

Technical specifications specify limits on unidentified leakage. The unidentified leakage to the containment is collected in the Reactor Building floor and equipment drain (RBF&ED) pocket sump and monitored by the level monitor system. The level transmitters of the pocket sump furnish signals to the plant computer which calculates an inflow rate in order to detect a change in RCPB leakage of 1 gpm.

5.2.7.3 Methods of Detection

The following methods are used to measure reactor coolant pressure boundary (RCPB) leakage. The corresponding systems are not considered engineered safety feature systems and are not designed to IEEE 279 Criteria.

5.2.7.3.1 Containment Air Particulate Monitors and Containment Radioactive

Gas Monitors

The containment air from the lower compartment is sampled and monitored by a monitor assembly with backup monitoring capability provided by a separate monitor assembly which normally monitors containment air from the upper compartment (for an additional description of these monitors, see Section 11.4). These separate monitor assemblies are interconnected by stainless steel tubing to ensure containment monitoring may continue should one monitor assembly malfunction. The upper containment monitor assembly consists of a particulate, a gas, and an iodine detector channel. The lower containment monitor assembly consists of a particulate and a gas detector channel. Only the particulate and gas channels are used in leakage detection. In the case of both upper and lower compartments, a combined sample from two locations is taken by means of two sample lines which join upstream of the monitor assemblies. Each assembly has the capability of valving off either sample line, thus providing some minimum assistance in locating the general area of the abnormal leakage.

These monitors are qualified to Seismic Category I requirements, and are powered from separate Class IE power trains.

The containment air particulate and gas radiation monitors are used in conjunction with the Reactor Building floor and equipment drain pocket sump level monitor to provide the three primary methods of RCS leak detection as required by Regulatory Guide 1.45. A direct correlation of these three methods is not technically possible (a non-radioactive leak will increase the sump rate of rise but not affect the radiation monitors, and an increase in RCS source term due to increased failed fuel will increase monitor count rate without affecting the sump rate of rise). However, an indirect correlation exists since all three methods are evaluated by Operations if an RCS leak is suspected, and an RCS mass balance is performed to confirm an RCS leak upon receipt of a radiation monitor alarm concurrent with an increasing rate of rise on the sump monitor, or an alarm on the sump monitor.

When the RCS source terms are less than the design bases source terms provided in Table 11.1-7, the gas monitor may not detect a leak of 1 gpm within 1 hour. To account for this situation, the gas and particulate monitor setpoints are set as low as reasonable, but high enough to avoid spurious alarms. In addition, as indicated above, an RCS mass balance is performed if an alarm is received from the particulate or gas radiation monitor in conjunction with an increasing rate of rise on the pocket sump monitor, or an alarm is received from the pocket sump monitor. Further, as prescribed in Regulatory Guide 1.45, other indirect methods of RCS leak detection such as a humidity monitor and containment air temperature indication are also available to support detection of an RCS leak during times of low RCS source terms.

Containment Air Particulate Monitor

This channel takes continuous air samples from the containment atmosphere and measures the air particulate beta activity. The samples are transported outside the containment via stainless steel tubing to the sample assembly skid and are monitored by a beta detector-moving filter paper assembly. The filter paper collects particulates on its constantly moving surface, which is viewed by a beta scintillator. The filter paper drive mechanism, which controls the filter paper movement, is provided as an integral part of the detector unit. After passing through the air particulate matter monitor, the samples are returned to the containment via the gas monitor.

The detector assembly is in a completely closed housing. The detector output is amplified by a preamplifier and transmitted to the Radiation Monitoring System cabinet in the MCR for indication, recording and annunciation. Lead shielding is provided to reduce the background radiation level to improve detectors's sensitivity.

Containment Radioactive Gas Monitor

This channel measures the gaseous beta activity of the containment atmosphere sample after it has passed through the particulate monitor filter. The gas in the shielded volume is viewed by a beta scintillator. Lead shielding is provided to reduce the background radiation level in order to improve detection sensitivity. After passing through the monitor chamber, the samples are returned to the Containment.

Containment Iodine Monitor

This monitor assembly is not normally used for leak detection.

5.2.7.3.2 Reactor Building Floor and Equipment Drain (RBF&ED) Sump and the RBF&ED Pocket Sump Level Monitors

The RBF&ED sump and RBF&ED pocket sump (located outside the crane wall) collect liquid from the RBF&EDs. Gross leakage is indicated by the frequency of operation of the RBF&ED sump pumps as indicated by running time meters and computer based display. The RBF&ED sump pumps are controlled by level switches. The RBF&ED sump is monitored continuously by two level detecting devices. One of the level monitors transmits a signal to the plant computer which converts the signal to an inflow rate.

The RBF&ED pocket sump is a 210 gallon sump located inside of the RBF&ED sump in order to isolate the drain from the drain system inside the crane wall (Figure 5.2-17). The RBF&ED pocket sump system is sealed to elevation 716. Drainage into the RBF&ED pocket sump must be pumped into the RBF&ED sump by one of two 120 gpm pumps. The RBF&ED pocket sump is monitored continuously by two level detecting devices. Each level monitor transmits a signal to the plant computer which converts the signal to an inflow rate.

The RBF&ED pocket sump pumps are manually started from the MCR upon receipt of a high level alarm for the RBF&ED pocket sump. The pumps are stopped manually from the MCR or automatically upon the sump reaching the low water level set point. The RBF&ED pocket sump has two independent level switches to assure positive shutoff of the pump(s). Following a LOCA, the operator will verify that the pumps are not operating. The RBF&ED pocket sump instrumentation consists of two instrument loops capable of indicating the presence of a 1 gpm leak within 1 hour.

The RBF&ED sump and RBF&ED pocket sump level instrumentation has been evaluated for seismic qualification and is considered to be capable of functioning following seismic events equal to or less than the operating basis earthquake. The plant computer, which calculates the sump inflow rate based on the level signal, is not seismically qualified to function following seismic events. A secondary means of establishing inflow rate is provided using the pocket sump level indication in the main control room.

5.2.7.3.3 Humidity Monitors

The humidity detector system offers another means of detecting leakage into the containment. Two humidity sensors (one in lower compartment and one in upper compartment) are installed within each containment. The humidity detector system consists of a probe sensitive to moisture in the air and independent of its absolute temperature. The humidity probe uses a resistance temperature detector (RTD) to measure the equilibrium temperature of a lithium chloride solution and this temperature can be referenced to dewpoint vapor pressure, or some other equivalent of absolute humidity. The RTD is the input to a temperature transmitter which regulates a current

signal proportional to the temperature of the RTD. Water buildup originating from any system within the Containment (such as reactor coolant, steam, or feedwater systems) will be detected by this sensor.

The ice condenser has negligible effect on the humidity detector sensitivity for all coolant leaks which do not open the inlet doors.

5.2.7.3.4 Temperature Monitors

Temperature sensors are strategically located throughout the containment. These sensors are able to detect leaks from any hot system. The general location of a leak is determined from the Main Control Room indication of area temperatures.

5.2.7.4 Intersystem Leakage Detection

The following methods are employed to monitor systems connected to the RCPB for signs of intersystem leakage.

5.2.7.4.1 ECCS Intersystem Leakage

Leakage from the reactor coolant system into low pressure portions of several ECCS lines is prevented by the use of two check valves in series. The check valves are tested for leakage during the preoperational test program. The inservice test program under ASME O&M Code and its application to surveillance of the check valves is under review. With the inservice test program implemented, the probability of a major leak through any part of check valves is expected to be limited to approximately 5.5 x 10^{-9} per reactor year (as indicated in Reference 12). This probability is low enough to eliminate any concern for a major intersystem leak into low pressure ECCS systems.

However, means are available to continuously monitor and alarm intersystem leakage across the interfaces between the RCS and the following: Cold Leg Accumulator (CLA), Chemical and Volume Control System (CVCS), Safety Injection System (SIS), and Residual Heat Removal System (RHRS). Leakage into these systems can be detected both by monitoring for signs of incoming leakage and by monitoring the RCS for signs of outgoing leakage. First, means provided to monitor incoming leakage is described individually for each of the five system interfaces. Then means provided to monitor the RCS inventory for outgoing leakage is described.

Administrative testing procedures include provisions for ensuring ECCS lines are refilled, if there are any volumes drained for testing, prior to reactor operation to preclude a water hammer following leak testing.

ECCS Inleakage

Intersystem leakage across the two check valves in each of the four CLA lines would increase the liquid inventory in the respective four accumulator tanks. Two level sensors are provided on each accumulator each having continuous indication and alarm available in the Main Control Room (MCR). A high level alarm is annunciated when the tank water level increases above its setpoint.

There are no intersystem leakage problems of practical concern in the CVCS because of the high system design pressure for the interfacing CVCS piping and because the CVCS generally has a higher pressure than the RCS to provide the normal charging and seal injection functions.

Intersystem leakage across the two check valves in each of the four SIS cold leg injection lines or across the two check valves and one normally closed gate valve in each of the four SIS hot leg injection paths would increase the pressure in those segment of the lines. A separate pressure sensor is provided in each of the two SIS pump discharge lines with indication continuously available in the MCR. The two pump discharge lines are connected with a normally open crossover line so a pressure increase in this segment would be detectable by either sensor. Three pressure relief valves are also provided for these SIS lines. When the pressure in the lines reached 1750 psig, the relief valves would discharge a total of 60 gpm to the pressurizer relief tank. Discharge into this tank would increase the tank level, pressure, and temperature. A level sensor is provided on the tank having both continuous indication and alarm available in the MCR. A pressure sensor is provided having both continuous indication and alarm available in the MCR. In addition, a temperature sensor is provided having both continuous indication and alarm in the MCR.

Intersystem leakage across the two check valves in each of the four RHRS cold leg injection lines or across the two check valves and one normally closed gate valve in each of the two RHRS hot leg injection paths or across the series/parallel combination of four motor operated valves in the RHRS suction line would increase the pressure in those segments of the lines. Three pressure relief valves are provided for these RHRS lines. If the pressure in the lines reached 600 psig, the relief valves would discharge to the pressurizer relief tank. Leakage into this tank is monitored continuously as described for the SIS leakage. In the event that the RHR heat exchanger outlet check valves leak, pressure would increase at the RHR pump discharge. RHRS pump discharge lines have both continuous pressure indication and common alarm available in the MCR.

RCS Outleakage

At steady state power operation, intersystem leakage from the RCS would reduce the RCS inventory and also affect RCS inventory control operations. Monitoring of the RCS inventory and the inventory operations would enable significant leakage from the RCS to be detected. If the signs of this significant leakage were not observed in the primary containment, it could be assumed that it was intersystem leakage, possibly into the ECCS. Monitoring the RCS would not aid in identifying the leakage path. At steady state, intersystem leakage from the RCS would cause the pressurizer level to drop which would automatically increase the CVCS charging pump flow rate. A flow element is provided in the common discharge of the two charging pumps with indication in the MCR. The CVCS Volume Control Tank (VCT) level would drop due to increased charging flow rate. When a level setpoint was reached, automatic makeup from a primary water makeup pump would be initiated. Indication is provided in the MCR for operation of the makeup pumps. If the level continued to drop, a low level alarm setpoint would be reached. A level sensor is provided on the VCT having

both continuous indication and alarm in the MCR. The operator could detect a change in the indication of VCT level corresponding to a loss of approximately 30 gallons. In addition to monitoring the inventory control operations, an RCS inventory balance is performed during steady state operation in accordance with the Technical Specifications.

If the leakage detection methods described above indicate that the ECCS check valves have excessive leakage, the permanent test lines provided in the system design could be used to determine the amount and identify the location of the leakage. If the RCS leakage limits in the Technical Specifications were exceeded by these check valves, and the leakage could not be reduced to within allowable limits in the time allowed, the reactor would be brought to cold shutdown and the valves would be repaired and retested to ensure the integrity of the double check valve isolation system.

5.2.7.4.2 Condenser Vacuum Pump Air Exhaust Monitors

These monitors continuously (except as described in this section) monitor the mechanical vacuum pump air exhaust for an indication of a primary-to-secondary leak. The monitors have overlapping ranges. The ranges are provided by low, intermediate, and high range channels. An additional description of these monitors is given in Section 11.4.

Gaseous activity in the secondary system resulting from a primary-to-secondary leak is detected by these monitors. The low range monitor, which provides sensitive leakage detection capability, employs a beta scintillator to monitor pump exhaust flow enroute to a vent pipe in the Turbine Building (see Section 11.3 for a detailed description of the vent). The response time of this monitor to increases in leakage is dependent upon transit time from the point of leakage to the monitor, baseline leakage, the increase in leakage rate, and the amount of fission product gaseous activity in the primary coolant.

A description of the sensitivity of this monitor is given in Section 11.4. Leakage detection capability of monitor RE-90-119 is within the guidelines of Regulatory Guide 1.45, Revision 0. Monitors RE-90-255 and RE-90-256 are intermediate and high range post accident monitors and serve no Regulatory Guide 1.45 function.

These monitors are indicated, recorded, and annunciated in the MCR.

Prior to achieving a vacuum in the Main Condenser (6.5 inches Hg absolute), the high condenser vacuum exhaust (CVE) flow drives water into the normal range CVE Radiation Monitors. The monitor cannot be operated until a vacuum is achieved in the condenser. As an alternate measure to identify and assess steam generater tube leaks, the Steam Generator Blowdown Monitors are used in conjunction with assessment provisions in the Offsite Dose Calculation Manual (ODCM). If the normal range CVE Radiation Monitor is not available, the radioactive effluent through the condenser vacuum exhaust is assessed under the sampling provisions in the ODCM.

In the unlikely event of a steam generator tube rupture during the time the CVE Monitors are not operating, the tube rupture is identified by the main steam radiation

monitors and radioactive effluents through the CVE are determined by sampling. In addition, the steam activity, as determined by the main steam radiation monitors, can be used in conjunction with the quantity of steam entering the condenser to determine the amount of radioactivity released through the condenser vacuum exhaust.

When the condenser vacuum system is still in service after a turbine trip, condenser in–leakage increases, initiating a spurious low flow alarm in the CVE radiation monitor, RE-90-119. Manual valves at the radiation monitor can be adjusted to reset the flow switch and enable the monitor to detect a low flow condition. Upon return to full power, the valves are again adjusted to reset the flow switch for the normal flow condition.

5.2.7.4.3 Component Cooling System Liquid Effluent Monitors

Each monitor continuously monitors downstream of its respective component cooling heat exchanger for activity levels indicative of reactor coolant leakage into the component cooling system from the Reactor Coolant System (RCS) during power operation, or from the Residual Heat Removal (RHR) system during plant cooldown. The monitors are of the off-line type; the detectors are gamma scintillators. An additional description of these monitors is given in Section 11.4. The monitor response time is dependent upon the time needed for transport from point of leakage to point of detection, the leakage rate, and the amount of fission product and corrosion product activity in the primary coolant.

Sequential isolation of various components after detection of leakage can be used to identify the point of leakage within a relatively short time. The monitors provide an effective means to detect and identify the source of a 1 gpm leak. This is consistent with the guidance provided in Regulatory Guide 1.45, Revision 0.

Detection of activity in the component cooling system water does not always indicate leakage from the RCS pressure boundary, since leakages from radioactive systems other than RCS or the RHR system, that are served by the component cooling system, may also produce detector response after a period of time. However, since the activities in these other systems will generally be much less than reactor coolant activity, the leakages will, of necessity, need to be much larger to produce the same monitor response than a leakage from the RCS or the RHR system would produce. Leakages from these other systems that result in activity detection would result in large changes in the component cooling system surge tank level.

These monitors are indicated, recorded, and annunciated in the Main Control Room. Visual and audible alarms are initiated on high radiation level and instrument malfunction. In the event of high activity, the monitors automatically initiate closure of the component cooling surge tank vent. For a description of monitor sensitivity, refer to Table 11.4-1.

5.2.7.4.4 Steam Generator Blowdown Liquid Effluent Monitor

This monitor provides an indication of primary-to-secondary leakage by monitoring a continuous sampling of the steam generator blowdown fluid.

The combined blowdown of all four steam generators is continuously monitored for radioactivity by means of an offline radiation monitoring system; the detectors are gamma scintillators. A description of the operational characteristics of this monitoring system is given in Section 11.4. The monitor response time is dependent upon mixing time in the steam generator secondary side water volume, transit time to the monitor, steam generator blowdown rate, increase in leakage rate, and the amount of fission product and corrosion product activity in the primary coolant. Leakage detection capability of this monitor is within the guidelines of Regulatory Guide 1.45, Revision 0.

The steam generator blowdown liquid effluent monitor is indicated, recorded, and annunciated in the Main Control Room. Visual and audible alarms are initiated on high radiation level and instrument malfunction. Detection of a high radiation alarm condition by the steam generator blowdown effluent monitor initiates automatic diversion of steam generator blowdown effluent to the condenser thus suspending release to the cooling tower blowdown line. For a description of the sensitivity of this monitor, refer to Table 11.4-1.

5.2.7.5 Unidentified Leakage System Sensitivity and Response Time

The sensitivity and response time of each leakage detection method employed for monitoring unidentified leakage to the containment is discussed below. Those methods capable of detecting an increase in leakage rate (or its equivalent) to the containment of one gpm in less than one hour are indicated.

5.2.7.5.1 Containment Air Particulate Monitors and Containment Radioactive Gas Monitors

The sensitivity of these monitors is listed in Table 11.4-2.

These monitors support other leakage detection systems by providing the operator with radiation level trends, which will increase at a faster rate than steady baseline leakage radiation if an increase in leak rate occurs.

Containment Air Particulate Monitors

Particulate activity resulting from leakage of primary coolant to the containment atmosphere is detected by the Containment Building lower compartment (or back-up upper compartment) air monitor. The response time of the air particulate monitors is dependent upon many factors although for most leakage locations it is a minimum of approximately 90 seconds. This is the time required for mixing inside the lower compartment plus 30 seconds of transit time to the detector. Particulate activity is detected by means of a beta scintillator which views a constantly moving filter paper. This filter paper is exposed to the airstream pumped from the containment atmosphere. The response time of the particulate monitor is the sum of this minimum 90 seconds normally required for mixing and transit and a time which is dependent on many factors including the increased leakage rate, normal baseline leakage, fraction of particulates which escape the leakage water, the amount of plate out on containment surfaces, the collection rate of the filter mechanism, and the amount of corrosion product and fission product activity in the coolant. The amount of fission product inventory in the reactor coolant depends on the fraction of failed fuel, fission

product inventory in the failed fuel, escape rates from fuel to coolant of the fission products in the failed fuel, and reactor coolant processing history.

The monitor supports the detection of 1.0 gpm increase in leakage in the presence of normal baseline leakage in less than 1.0 hour. The calculation to support this result includes: (1) realistic values for reactor coolant activity, reactor coolant normal baseline leakage and containment purge frequency, and (2) assumed 10% of the airborne Kr-88 daughter, Rb-88, nuclides arriving in filterable particulate form at the monitor filter. This meets the requirements of Regulatory Guide 1.45.

Containment Radioactive Gas Monitor

Radioactive gas resulting from leakage of primary coolant into the containment atmosphere is monitored by the Containment Building lower compartment (or back-up upper compartment) air monitor system; the detector is a beta scintillator. The response time is dependent on the leakage rate, normal baseline leakage, and the amount of gaseous fission product activity in the coolant.

The monitors support detection of 1 gpm abnormal leakage within 1 hour assuming no baseline leakage. This supports the requirements of Regulatory Guide 1.45.

5.2.7.5.2 Reactor Building Floor and Equipment Drain (RBF&ED) Pocket Sump

The RBF&ED pocket sump instrumentation sensitivity and response time is such that the instrumentation can be used to detect a change in the inflow rate of 1 gpm in less than 1 hour. The instrumentation samples the sump level continuously while the plant computer converts this data to a level change rate (inches/hr). This level change rate is then correlated to a sump inflow rate (gpm).

5.2.7.5.3 Humidity Monitors

The humidity detector system is sensitive to leakage of the order of 2 to 10 gpm depending on the cooling water temperature, containment air temperature variation, and containment air recirculation rate. It is also sensitive to both radioactive and nonradioactive discharge. The humidity detector has a sensitivity of ±2% absolute humidity. Response time for the system ranges from approximately 10 minutes for a 10 gpm leak to about 50 minutes for a 2 gpm leak. The system is an indirect indication of leakage to the containment, in accordance with NRC Regulatory Guide 1.45, paragraph c.3.

If the humidity monitor detects an increase in containment moisture without a corresponding increase in activity level, the indicated source of leakage would be judged to be a nonradioactive system except when the reactor coolant activity level may be low.

5.2.7.5.4 Temperature Monitors

The temperature sensors have an accuracy of ±2°F. Their sensitivity and response time is dependent on the distance of the sensor from the leak and the amount of mixing

of the containment atmosphere. The temperature sensors are an aid in determining the location of a leak from a high temperature system.

5.2.7.6 Seismic Capability

The containment air particulate monitors and the containment radioactive gas monitors have the capability to remain functional during and after a safe shutdown earthquake. The component cooling system liquid effluent monitors and the RBF&ED pocket sump level monitor are maintained as Seismic Category I(L) and are not provided with 1E power. The temperature and humidity detection sensor instrumentation is seismically qualified to I(L). The steam generator blowdown liquid monitors and the condenser vacuum pump air exhaust monitors, which are located in the Turbine Building, are not seismically qualified. The vertical scale indicators, (with the exception of those located on the containment air particulate monitors and containment radioactive gas monitor ratemeters, which are Seismic Category I), recorders, and annunciators associated with the leakage detection monitors are not seismically qualified.

5.2.7.7 Indicators and Alarms

Indicators and alarms are provided in the Main Control Room for each leakage detection system as described below.

5.2.7.7.1 Radiation Monitors

The activity is indicated on meters and recorded in the Main Control Room. High activity alarm conditions are indicated on the control board annunciator. Alarms are also initiated for instrument malfunction (See Section 11.4.2).

5.2.7.7.2 RBF&ED Pocket Sump Level Monitors

The level change rate for the RBF&ED pocket sump is produced by the plant computer which actuates an alarm when the level change rate (inches/hr) exceeds the setpoint rate corresponding to a sump inflow rate of one gpm above the background rate at the time of calibration. Alarms are also actuated on high level indication.

5.2.7.7.3 Humidity Monitors

The humidity monitors give indication in the MCR of the primary containment absolute humidity. Alarms are initiated on a high rate of increase of containment moisture content.

5.2.7.7.4 Temperature Monitors

These monitors give MCR indication of containment air temperature (°F). These monitors initiate a high temperature alarm for a temperature in excess of 120°F.

5.2.7.8 Testing

The following testing methods are employed for the leakage detection system.

Process radiation monitors are tested and calibrated as described in Section 11.4.4. The containment particulate and gas monitors and the RBF&ED pocket sump level monitors are calibrated per the Technical Specifications.

The normally expected leakage is used for an operability test of the RBF&ED pocket sump level monitors.

5.2.8 Inservice Inspection of ASME Code Class 1 Components

5.2.8.1 Components Subject to Examination and/or Test

TVA Class A (ASME Code Class 1), B (ASME Code Class 2), C and D (ASME Code Class 3) components containing water, steam, or radioactive waste shall be examined and tested in accordance with Section XI of the ASME Boiler and Pressure Vessel Code as required by 10 CFR 50.55a(g), except where specific written relief has been requested. The in-service inspection requirements are contained in Section 6.6 for ASME Code Class 2 and 3 Components and Section 3.8.2.7.9 for ASME Code Class MC and metallic liners of Code Class CC components. The in-service inspection requirements are contained in Section 3.8.5.1.1 for ASME Code Class CC concrete components. In addition, this program implements applicable portions of the WBN Technical Specifications.

5.2.8.2 Accessibility

Consideration has been given to the inspectability of the ASME Code Class 1 systems in the design of components, in the equipment layout, and in the support structures to permit access for the purpose of inspection. Access for inspection is defined as access for examination by direct or remote means and/or by contacting vessel surfaces during nuclear unit shutdown.

Reactor Vessel

Access for inspection of the reactor vessel will be as follows:

(1) The vessel flange area and head can be inspected during refueling operations. Reactor internal components can be removed from the reactor vessel to allow inspection of the reactor internals and the complete reactor vessel internal surface.

(2) The closure head is stored dry during refueling to facilitate direct inspection. Reactor studs, nuts, and washers are removed to dry storage during refueling.

(3) Inner surfaces of the vessel outlet nozzles can be inspected by remote means during refueling periods. The internal surface of the inlet nozzles can be inspected by remote means following removal of the lower vessel internals.

(4) External surfaces of the vessel nozzle-to-piping welds can be inspected following removal of shielding and insulation. Insulation of primary system components and piping is of the removable type.

Pressurizer

The external surface is accessible for surface and volumetric inspection. Manways are provided to allow access for internal inspection.

Steam Generator

The external surfaces of the steam generator are accessible for surface and volumetric inspection. The reactor coolant side of the steam generator can be inspected internally by remote visual means by removing the manway covers in the steam generator head.

Reactor Coolant Pumps

The external surfaces of the pump casings are accessible for inspection. The internal surface of the pump is available for inspection by removing the pump internals.

Piping

The reactor coolant piping, fittings, and attachments to the piping external to the primary shield are accessible for external surface and volumetric Inspections.

Design and Construction Phase Inspection

During the design and construction phase, consideration was given to provide access to equipment to be inspected as listed below:

(1) 100% of reactor vessel welds and surface (either from the inside or outside, or a combination of both).

(2) Reactor vessel internals.

(3) Welds on other ASME Code Class 1 vessels.

(4) Reactor coolant piping welds.

(5) Interior surfaces of other ASME Code Class 1 vessels.

(6) Reactor coolant pump casings.

(7) External surfaces of reactor coolant pump casings.

(8) Internally welded supports.

(9) Mechanical connection supports.

(10) Control rod drive penetrations.

Removable metallic insulation provides access to the areas of interest on the steam generators, pressurizer, and piping.

5.2.8.3 Examination Techniques and Procedures

The visual, surface, and volumetric examination procedures used by TVA are performed in accordance with subarticle IWA-2200 of ASME Section XI.

Code cases to be used shall be identified in the inspection program in accordance with Subarticle IWA-2440 of ASME Section XI.

5.2.8.4 Inspection Intervals

An inspection schedule for Class 1 components was developed in accordance with subarticles IWA-2400 and IWB-2400 of ASME Section XI.

5.2.8.5 Examination Categories and Requirements

The examination categories and requirements for Class 1 components is in accordance with subsection IWB of ASME Section XI.

5.2.8.6 Evaluation of Examination Results

Evaluation of examination results shall be in accordance with article IWA-3000 of ASME Section XI. Components with unacceptable indications are repaired or replaced in accordance with articles IWA-4000 and/or IWA-7000.

5.2.8.7 System Pressure Tests

The program for Class 1 system pressure tests shall be in accordance with articles IWA-5000 and IWB-5000 of ASME Section XI except where specific written relief has been requested and approved by NRC.

REFERENCES

(1) "Samples Analysis of a Class 1 Nuclear Piping System," prepared by ASME Working Group on Piping, ASME Publication.

(2) Buchalet, C. and Mager, T. R., "A Summary Analysis of the April 30 Incident at the San Onofre Nuclear Generator Station Unit 1," WCAP-8099, April 1973.

(3) Vashi, K, M. (Ed.), "Documentation of Selected Westinghouse Structural Analysis Computer Codes," TCAP-8252, Revision 1, May 1977.

(4) Smith, M., et al, “Overpressure Protection Report for Watts Bar Nuclear Power Plant Unit 2,” March 2010.

(5) Nay, J. A., "Process Instrumentation for Westinghouse Nuclear Steam Supply Systems," WCAP-7547-L (Proprietary) and WCAP-7671 (Non-Proprietary), April 1971.

(6) Hazelton, W. S., et al., "Basis for Heatup and Cooldown Limit Curves," WCAP-7924-A, April 1975.

(7) Golik, M. A., "Sensitized Stainless Steel in Westinghouse PWR Nuclear Steam Supply Systems," WCAP-7477-L (Proprietary), March 1970 and WCAP-7735 (Non-Proprietary), August 1971.

(8) Enrietto, J. F., "Control of Delta Ferrite in Austenitic Stainless Steel Weldments," WCAP-8324-A, June 1974.

(9) Shabbits, W. O., "Dynamic Fracture Toughness Properties of Heavy Section A533 Grade B Class 1 Steel Plate," WCAP-7623, December 1970.

(10) "Bench Marks Problem Solutions Employed for Verification of WECAN Computer Program," WCAP-8929, June 1977.

(11) K. Takeuchi, et. al., "MULTIFLEX - a Fortran-IV Computer Program for Analyzing Thermal-Hydraulic-Structure System Dynamics," WCAP-8708, February 1976.

(12) Nuclear Technology, Vol. 37, January 1978, "Probablistic Analysis of the Interfacing System Loss-of-Coolant Accident and Implications on Design Decisions."

(13) Chicots, J. M., "Evaluation of Pressurized Thermal Shock for Watts Bar Unit 1," WCAP 13300, Revision 1, December 1992, and "Rosier, B. A., Watts Bar Unit 2 Heatup and Cooldown Limit Curves for Normal Operation and PTLR Support Documentation," WCAP-17035-NP, Rev 1, October 2009.

(14) System Description N3-68-4001, Appendix A, "Watts Bar Unit 1 - RCS Pressure and Temperature Limits Report (PTLR)" and Appendix B, "Watts Bar Unit 2 - Pressure and Temperature Limits Report (PTLR)".

(15) WCAP-12375, Rev 1 (Prop Class 3) and WCAP-12374, Rev 1 (Prop Class 2), "Topical Report Eagle-21 Microprocessor-Based Process Protection System".

Table 5.2-1 Applicable Code Addenda

Reactor Vessel	ASME III 1971 Ed. thru Winter 71
Steam Generator	ASME III 1971 Ed. thru Summer 71 (1972 Winter add. for Feedwater Nozzle)
Pressurizer	ASME III 1971 Ed. thru Summer 71
CRDM Housing Full length	ASME III 1971 Ed. thru Winter 72
CRDM Head Adapter	ASME III 1971 Ed. thru Winter 72
Reactor Coolant Pump	ASME III 1971 Ed. thru Summer 72
Reactor Coolant Pipe	ASME III 1971 Ed. thru Winter 71
Surge Line Thermal Stratification	ASME III 1986 Ed.
Surge Line	ASME III 1971 Ed. thru Winter 71
Pressurizer Safety Valves	ASME III 1971 Ed. thru Winter 72

Table 5.2-2 Summary Of Reactor Coolant System Design Transients

Normal Conditions	Occurrences
1. Heatup and cooldown at 100°F/hr (pressurizer cooldown 200°F/hr)	200 (each)
2. Unit loading and unloading at 5% of full power/min	18,300 (each)
3. Step load increase and decrease of 10% of full power	2,000 (each)
4. Large step load decrease with steam dump	200
5. Steady state fluctuations	
a. Initial fluctuations	1.5×10^5
b. Random fluctuations	3.0×10^6
Upset Conditions	
1. Loss of load, without immediate reactor trip	80
2. Loss of power (blackout with natural circulation in the Reactor Coolant System)	40
3. Partial loss of flow (loss of one pump)	80
4. Reactor trip from full power	400
5 .Reactor Trip with Cooldown and ECCS Actuation	10
6. Inadvertent RCS depressurization	20
7. Escessive Feedwater Flow	30
8. RCS Cold Overpressurization	10
Emergency Conditions*	
1. Small loss of coolant accident	5
2. Small steam break	5
Faulted Conditions*	
1. Main reactor coolant pipe break (large loss of coolant accident)	1
2. Large steam break	1
Test Conditions	
1. Turbine roll test	10
2. Primary side hydrostatic test	5
3 Primary side leak test	50

* In accordance with the ASME Nuclear Power Plant Components Code, emergency and faulted conditions are not included in fatigue evaluation.

Table 5.2-3 Summary Of Reactor Coolant System Design Transients (Steam Generator And Pressurizer Only) (Page 1 of 2)

Normal Conditions	Occurrences
1. Heatup and cooldown at 100°F/hr (pressurizer cooldown 200°F/hr)	200 (each)
2. Unit loading and unloading at 5% of full power/min	
a. Steam generator	13,200 (each)
b. Pressurizer	13,200 (each)
3. Step load increase and decrease of 10% of full power	2,000 (each)
4. Large step load decrease with steam dump	200
5. Steady state fluctuations	
a. Initial fluctuations	1.5×10^5
b. Random fluctuations	3.0×10^6
6. Feedwater cycling at hot shutdown	2,000
7. Loop out of service	
a. Normal loop shutdown	80
b. Normal loop startup	70
8. Unit loading and unloading between 0 and 15% of full power (Steam generator only)	500 (each)
9. Boron concentration equalization	26,400
10. Refueling (pressurizer only)	80
Upset Conditions	
1. Loss of load, without immediate reactor trip	80
2. Loss of power (blackout with natural circulation in the Reactor Coolant System)	40
3. Partial loss of flow (loss of one pump)	80
4. Reactor trip from full power	400
5. Inadvertent reactor coolant depressurization	
a. General	20
b. Inadvertent auxiliary spray (pressurizer only)	10
6. Inadvertent startup of an inactive loop	10
7. Control rod drop	80
8. Inadvertent Emergency Core Cooling System actuation	60
9. Operating Basis Earthquake (20 earthquakes of 20 cycles each)	400 cycles
10. Excessive Feedwater Flow	30
11. RCS Cold Overpressurization	10

Table 5.2-3 Summary Of Reactor Coolant System Design Transients (Steam Generator And Pressurizer Only) (Page 2 of 2)

Emergency Conditions*	Occurrences
1. Small loss of coolant accident	5
2. Small steam break	5
3. Complete loss of flow	5
Faulted Conditions*	
1. Main reactor coolant pipe break (large loss of coolant accident)	1
2. Large steam break	1
3. Feedwater line break	1
4. Reactor coolant pump locked rotor	1
5. Control rod ejection	1
6. Steam generator tube rupture	(included under upset conditions, reactor trip from full power)
7. Safe shutdown earthquake	1
Test Conditions	
1. Turbine roll test	20
2 Primary side hydrostatic test	10
3. Secondary side hydrostatic test	10
4. Primary side leak test	200
5. Secondary side leak test	80
6. Tube leakage test	800

* In accordance with the ASME Nuclear Power Plant Components Code, emergency and faulted conditions are not included in fatigue evaluation.

Table 5.2-4 Loading Combinations For ASME Class 1 Components And Supports (Excluding Pipe Supports)

Condition Classification	Loading Combination
Design	Design Pressure, Design Temperature, Deadweight, Operating Basis Earthquake
Normal	Normal Condition Transients, Deadweight
Upset	Upset Condition Transients, Deadweight, Operating Basis Earthquake
Faulted	Faulted Condition Transients, Deadweight, Safe Shutdown Earthquake or (Safe Shutdown Earthquake and Pipe Rupture Loads)

Table 5.2-5 Allowable Stresses For ASME Section III Class 1 Components[1,3]

Operating Condition Classification	Vessels/ Tanks	Piping	Pumps	Valves	Component Supports[2]
Normal	NB-3222	NB-3653	NB-3222	NB-3525	NF-3222 NF-3231.1
Upset	NB-3223	NB-3654	NB-3223	NB-3525	NF-3223 NF-3231.1
Emergency	NB-3224	NB-3655	NB-3224	NB-3526	NF-3224 NF-3231.1 (b)
				ACTIVE Valve	INACTIVE Valve
Faulted	NB-3225[2]	NB-3656	NB-3225	a) Calculate Pm from para. NB3545.1 with Internal Pressure Ps = 1.25 Ps Pm < 1.5Sm	a) Calculate Pm from para. NB3545.1 with Internal Pressure Ps = 1.50Ps Pm < 2.4Sm
				b) Calculate Sn from para. NB3545.2 with Cp = 1.5 Ps = 1.25Ps Qt2 = 0 Ped = 1.3X value of Ped from equations of NB3545.2(b)(1) Sn < 3Sm	b) Calculate Sn from para. NB3545.2 with Cp = 1.5 Ps = 1.50 Ps Qt2 = 0 Ped = 1.3X value of Ped from equations of NB3545.2(b)(1) Sn < 3Sm

Pe, Pm, Pb, Qt, Cp, Sn, and Sm as defined by Section III ASME Code

NOTES:
(1) Limits identified refer to subsections of the ASME Code, Section III.
(2) Also see Section 5.2.1.10.7.
(3) A test of the components may be performed in lieu of analysis.

Table 5.2-6 Relief Valve Discharge To The Pressurizer Relief Tank

Reactor Coolant System		
3	Pressurizer Safety Valves	Figure 5.1-1-1
2	Pressurizer Power-Operated Relief Valves	Figure 5.1-1-1
4	Reactor Vessel Head Vent Valves	Figure 5.1-1-1
Emergency Core Cooling System		
2	Safety Injection Pump Discharge to Hot Leg	Figure 6.3-1-1
1	Safety Injection Pump Discharge to Cold Leg	Figure 6.3-1-1
2	Safety Injection Pump Suction	Figure 6.3-1-1
Residual Heat Removal System		
1	Residual Heat Removal Pump Suction Line from the Reactor Coolant System Hot Leg	Figure 5.5-4-1
3	Residual Heat Removal Pump Discharge to Cold Leg/Hot Leg	Figure 6.3-1-1
Chemical and Volume Control System		
3	Charging Pump Suction	Figure 9.3-15, Sheet 1
1	Seal Water Return Line	Figure 9.3-15, Sheet 1
1	Letdown Line	Figure 9.3-15, Sheet 1
Containment Spray System		
2	Containment Spray Pump Suction	Figure 6.2.2-1

Table 5.2-7 Reactor Coolant System Design Pressure Settings

	PSIG
Hydrostatic Test Pressure	3107
Design Pressure	2485
Safety Valves (Begin to Open)	2485
High Pressure Reactor Trip	2385
High Pressure Alarm	2310
Power Operated Relief Valves (PORVs)	2324*
Pressurizer Spray Valves (Full Open)	2310
Pressurizer Spray Valves (Begin to Open)	2260
Proportional Heaters (Begin to Operate)	2250
Operating Pressure	2235
Proportional Heater (Full Operation)	2220
Backup Heaters On	2210
Low Pressure Alarm	2210
Low Pressure Reactor Trip	1970

* At 2324 psig, a pressure signal initiates actuation (opening) of these valves. Remote manual control is also provided.

Table 5.2-8 Reactor Coolant Pressure Boundary Material Class 1 Primary Components (Page 1 of 3)

Reactor Vessel Components	Material Specifications
Head Plates (top and bottom)	SA533 Gr A, B or C, Class 1 or 2 (Vacuum treated)
Shell Plates (core region)	SA508 class 2
Shell, Flange & Nozzle Forgings	SA508 Class 2 or 3
Nozzle Safe Ends	SA182 Type F304 or F316
CRDM and/or ECCS Appurtenances-Upper Head	SB166 or 167 and SA182 Type F304
Instrumentation Tube Appurtenances - Lower Head	SB166 and or 167 and SA182 Type F304, F304L or F316
Closure Studs, Nuts, Washers, Inserts and Adaptors	SA-540 class 3 Gr B-24 (as modified by Code Case 1605)
Core Support Pads	SB166 with Carbon less than 0.10%
Monitor Tubes & Vent Pipe	SA312 or 376 Type 304 or 316 or SB166
Vessel Supports, Seal Ledge & Head Lifting Lugs	SA516 Gr 70 Quenched & Tempered or SA 533 Gr A, B or C, Class 1 or 2. (Vessel supports may be of weld metal buildup of equivalent strength)
Cladding & Buttering	Stainless steel weld Metal Analysis A-7 and Ni-Cr-Fe Weld metal F-Number 43.
Steam Generator Components	
Pressure Plates	SA533 Gr A, B or C, Class 1 or 2
Secondary Opening Covers	SA516 Gr 70
Pressure Forgings (including nozzles and tubesheet)	SA508 Class 1 or 2
Nozzle Safe Ends	Stainless Steel Weld Metal Type 308L
Channel Head	SA216 Gr WCC
Tubes	SB163 Ni-Cr-Fe, Annealed
Cladding and Buttering	Stainless Steel Weld Metal Analysis A-7 and Ni-Cr-Fe Weld Metal F-Number 43
Closure Bolting	SA193 Gr B-7
Nuts	SA194 Gr 7
Washers	A F436 Through Hardened
Helicoils	SA479 and AMS 7245
Primary Insert	SA240, Type 304

Table 5.2-8 Reactor Coolant Pressure Boundary Material Class 1 Primary Components (Page 2 of 3)

Pressurizer Components	Material Specifications
Pressure Plates	SA533 Gr A, B or C, Class 1 or 2
Pressure Forgings	SA508 Class 2 or 3
Nozzle Safe Ends	SA182 or 376 Type 316 or 316L and Ni-Cr-Fe Weld Metal F-Number 43
Cladding and Buttering	Stainless Steel Weld Metal Analysis A-7 and Ni-Cr-Fe Weld Metal F-Number 43
Closure Bolting	SA193 Gr B-7
Pressurizer Safety Valve Forgings	SA182 Type F316
Reactor Coolant Pump	
Pressure Forgings	SA182 F304, F316, F347 or F348
Pressure Casting	SA351 Gr CF8, CF8A or CF8M
Tube & Pipe	SA213, SA376 or SA312 - Seamless Type 304 or 316
Pressure Plates	SA240 Type 304 or 316
Bar Material	SA479 Type 304 or 316
Closure Bolting	SA193, SA320, SA540, SA453, Gr 660
Flywheel	SA533 Gr B, Class 1

Table 5.2-8 Reactor Coolant Pressure Boundary Material Class 1 Primary Components (Page 3 of 3)

Reactor Coolant Piping	Material Specifications
Reactor Coolant Pipe	SA351 Gr CF8A; ASME Section III 1971 Add. W71
Reactor Coolant Fittings	SA351 Gr CF8A; ASME Section III 1971 Add. W71
Branch Nozzles	SA182 Gr 304N or GR 316 (Code Case 1423-1)
Surge Line	SA376 Gr 304, or Gr 316; ASME Section III 1971 Add. S71 and W71, respectively
Auxiliary Piping 1/2" through 12" and wall schedules 40S through 80S (ahead of second isolation valve)	ANSI B36.19
All other Auxiliary Piping (ahead of second isolation valve)	ANSI B36.10
Socket weld fittings	ANSI B16.11
Piping Flanges	ANSI B16.5
Full Length Control Rod Drive Mechanism	
Pressure Housings	SA182 Gr F304 or SA351 Gr CF8
Pressure Forgings	SA182 Gr F304 or SA336 Gr F8
Bar Materials	SA479 Type 304
Welding Materials	SFA 5.4 and 5.9 Type 308 or 308L

Table 5.2-9 Reactor Coolant Pressure Boundary Materials Class 1 And 2 Auxiliary Components (Page 1 of 3)

Valves	
Bodies	SA182 Type F316 or SA351 Gr CF8 or CF8M
Bonnets	SA182 Type F316 or SA351 Gr CF8 or CF8M
Discs	SA182 Type F316 or SA564 Gr 630 Cond 1100°F Heat Treatment or SA351 Gr CF8 or CF8M
Pressure Retaining Bolting	**Class 1** SA453 Gr 660 or SA193 Gr B7 **Class 2** SA453 Gr 660 or SA193 Gr B7 for temperature > 600°F SA564 Type 630*, SA193 Gr B7, or SA453 Gr 660 for temperature ≤ 600°F
Pressure Retaining Nuts	**Class 1** SA453 Gr 660 or (SA194 Gr 6) or SA194 Gr 2H **Class 2** SA453 Gr 660 (SA194 Gr 6) or SA194 Gr 2H for temperature > 600°F SA453 Gr 660 (SA194 Gr 6), SA564 Type 630*, or SA194 Gr 2H for temperature ≤ 600°F
Auxiliary Heat Exchangers	
Heads	SA240 Type 304 or 304L
Nozzle Necks	SA182 Gr F304
Tubes	SA 213 TP304 or SA249 Type 304
Tube Sheets	SA182 Gr F304 or SA240 Type 304
Shells	SA240 and SA312 Type 304 or SA351 CF8 or SA249 TP304
Pressure Retaining Bolting	**Class 1** SA453 Gr 660 or SA193 Gr B7 **Class 2** SA453 Gr 660 or SA193 Gr B7 for temperature > 600°F SA564 Type 630*, SA193 Gr B7, or SA453 Gr 660 for temperature ≤ 600°F
Pressure Retaining Nuts	**Class 1** SA453 Gr 660 (SA194 Gr 6) or SA194 Gr 2H **Class 2** SA453 Gr 660 (SA194 Gr 6) or SA194 Gr 2H for temperature > 600°F SA453 Gr 660 (SA194 Gr 6), SA564 Type 630*, or SA194 Gr 2H for temperature ≤ 600°F

Table 5.2-9 Reactor Coolant Pressure Boundary Materials Class 1 And 2 Auxiliary Components (Page 2 of 3)

Auxiliary Pressure Vessels, Tanks, Filters, etc.	
Shells & Heads	SA312 TP304 or SA182 F304 or SA240 Type 304 or SA264 consisting of SA537 CL1 with Stainless Steel Weld Metal Analysis A-8 Cladding or SA516 GR70 with SA240 TP304 Clad
Flanges & Nozzles	SA182 Gr F304 and SA105 or SA350 Gr LF2, LF3 with Stainless Steel Weld Metal Analysis A-8 Cladding or SA479 TP304
Piping	SA312 and SA240 TP304 or TP316 Seamless
Pipe Fittings	SA403 WP304 Seamless
Pressure Retaining Bolting	**Class 1** SA453 Gr 660 or SA193 Gr B7 **Class 2** SA453 Gr 660 or SA193 Gr B7 for temperature > 600°F SA564 Type 630*, SA193 Gr B7, or SA453 Gr 660 for temperature ≤ 600°F
Pressure Retaining Nuts	**Class 1** SA453 Gr 660 (SA194 Gr 6) or SA194 Gr 2H **Class 2** SA453 Gr 660 (SA194 Gr 6) or SA194 Gr 2H for temperature > 600°F SA453 Gr 660 (SA194 Gr 6), SA564 Type 630*, or SA194 Gr 2H for temperature ≤ 600°F
Auxiliary Pumps	
Pump Casing & Heads	SA351 Gr CF8 or CF8M, SA182 Gr F304 or F316, SA240 TP304 or SA479 TP304
Flanges & Nozzles	SA182 Gr F304 or F316, SA403 Gr WP316L Seamless
Piping	SA312 TP304 or TP316 or 304L Seamless
Stuffing or Packing Box Cover	SA351 Gr CF8 or CF8M, SA240 TP304 or TP316
Pipe Fittings	SA403 Gr WP316L Seamless or 304L, SA479 TP304 or 316
Pressure Retaining Bolting	**Class 1** SA453 Gr 660 or SA193 Gr B7 **Class 2** SA453 Gr 660 or SA193 Gr B7 for temperature > 600°F SA564 Type 630*, SA453 Gr 660 or SA193 Gr B6, B7, or B8M for temperature ≤ 600°F

Table 5.2-9 Reactor Coolant Pressure Boundary Materials Class 1 And 2 Auxiliary Components (Page 3 of 3)

Auxiliary Pumps (Continued)	
Pressure Retaining Nuts	**Class 1** SA453 Gr 660 (SA194 Gr 6) or SA194 Gr 2H **Class 2** SA453 Gr 660 (SA194 Gr 6) or SA194 Gr 2H for temperature > 600°F SA453 Gr 660 (SA194 Gr 6), SA564 Type 630*, or SA194 Gr 2H or 8M for temperature ≤ 600°F

* SA564 Type 630 required to be furnished with minimum aging temperature of 1100°F.

Table 5.2-10 Reactor Coolant Water Chemistry Specifications

Oxygen, ppm, maximum	Oxygen concentration of the reactor coolant is maintained below 0.1 ppm for plant operation above 250°F. Hydranzine may be used to chemically scavenge oxygen during heatup
Cholride, ppm, maximum	0.15
Fluoride, ppm, maximum	0.15
Hydrogen, cc(STP)/kg H20	
Reactor power level above 1 MWt, excluding decay heat during subcritical operation	25 - 50
Boric Acid, ppm B	Variable from 0 to approximately 4000
Zinc, ppb (normal power operation)	<40 ppb

Table 5.2-11a Watts Bar Unit 1 Reactor Vessel Toughness Data (Page 1 of 2)

Component	Mat'l Type	Ni (%)	Cu (%)	P (%)	NDTT (°F)	Minimum 50 Ft lb/ 35 Mil Temp (°F) Parallel to Major Working Direc	Minimum 50 Ft lb/ 35 Mil Temp (°F) Normal to Major Working Direc	RTNDT (°F)	Average Upper Shelf (Ft-lb) Parallel to Major Working Direc	Average Upper Shelf (Ft-lb) Normal to Major Working Direc
Closure Dome	A533-B-1	-	-	-	- 4	5	25*	- 4	99	64*
Closure HD Ring	A508-2	-	-	-	- 4	23	43*	- 4	147	96*
Head Flange	A508-2	-	-	-	-49	- 3	17*	-43	130	85*
Vessel Flange	A508-2	-	-	-	-40	-86	-66*	-40	155	101*
Inlet Nozzle	A508-2	-	-	-	- 4	46	66*	6	109	71*
Inlet Nozzle	A508-2	-			- 4	32	52*	- 4	124	81*
Inlet Nozzle	A508-2	-	-	-	5	45	65*	5	122	79*
Inlet Nozzle	A508-2	-	-	-	-13	3	23*	-13	128	83*
Outlet Nozzle	A508-2	-	-	-	-22	- 8	12*	-22	119	77*
Outlet Nozzle	A508-2	-	-	-	-31	13	33*	-27	120	78*
Outlet Nozzle	A508-2	-	-	-	- 4	-19	1*	- 4	141	92*
Outlet Nozzle	A508-2	-	-	-	-22	25	45*	-15	101	66*
Nozzle Shell	A508-2	0.87	0.12	0.005	-22	14	34*	-22	151	98*
Intermed. Shell	A508-2	0.80	0.17	0.012	-22	-5	107**	47	132	62**
Lower Shell	A508-2	0.83	0.08	0.006	5	-60	22***	5	135	111***
Shell Ring	A508-2	0.86	0.06	0.009	-40	10	30*	-30	147	96*
Bottom HD Trans Ring	A533-B-1	-	-	-	-31	- 4	16*	-31	128	83*
Bottom HD Trans Ring	A533-B-1	-	-	-	-31	-17	3*	-31	135	88*

Table 5.2-11a Watts Bar Unit 1 Reactor Vessel Toughness Data (Page 2 of 2)

Component	Mat'l Type	Ni (%)	Cu (%)	P (%)	NDTT (°F)	Minimum 50 Ft lb/ 35 Mil Temp (°F) Parallel to Major Working Direc	Minimum 50 Ft lb/ 35 Mil Temp (°F) Normal to Major Working Direc	RTNDT (°F)	Average Upper Shelf (Ft-lb) Parallel to Major Working Direc	Average Upper Shelf (Ft-lb) Normal to Major Working Direc
Bottom HD Trans Ring	A533-B-1	-	-	-	-40	-18	2*	-40	109	71*
Bottom HD Dome	A533-B-1	-	-	-	-31	34	54*	- 6	128	83*
Weld (Inter./ Lower Shell)	-	0.70	0.05	0.010	-67	-	17	-43**	-	134**
Heat Affected Zone	-	-	-	-	-	-	34	-26**	-	92**

* Estimated by the methods contained in NUREG-0800 "Standard Review Plan," Section 5.3.2, "Pressure-Temperature Limits"

** Based on transverse data from surveillance program

***Based on supplemental testing performed by Westinghouse.

Table 5.2-11b Watts Bar Unit No. 2
Reactor Vessel Toughness Data

COMPONENT	HEAT NO.	MAT'L SPEC. NO.	Ni (%)	Cu (%)	P (%)	TNDT (°F)	MINIMUM 50 FT LB/ 35 MIL TEMP (°F) MWD (°F)	NMWD (°F)	RTNDT (°F)	AVERAGE SHELF ENERGY MWD FT-LB	NMWD FT-LB
Closure Head Dome	55994-1	A533B C1.1	---	.08	.006	-4	-8	12*	-4	143	93*
Closure Head Ring	07793	A508 C1. 2	---	.08	.008	-4	28	48*	-4	138	90*
Closure Head Flange	528994	A508 C1. 2	---	.07	.009	-40	-13	7*	-40	146	95*
Vessel Flange	527944	A508 C1. 2	---	.06	.009	-22	10	30*	-22	219	142*
Inlet Nozzle	528209	A508 C1. 2	---	.05	.008	-22	5	25*	-22	120	78*
Inlet Nozzle	528267	A508 C1. 2	---	.06	.011	-22	26	46*	-14	101	66*
Inlet Nozzle	528267	A508 C1. 2	---	.06	.010	-13	23	43*	-13	93	60*
Inlet Nozzle	528329	A508 C1. 2	---	.04	.009	-13	25	45*	-13	129	84*
Outlet Nozzle	528095	A508 C1. 2	---	.06	.009	-22	17	37*	-22	138	90*
Outlet Nozzle	528207	A508 C1. 2	---	.06	.011	-13	7	27*	-13	109	71*
Outlet Nozzle	528209	A508 C1. 2	---	.05	.009	-40	5	25*	-35	128	83*
Outlet Nozzle	528329	A508 C1. 2	---	.04	.009	-31	26	46*	-14	128	83*
Nozzle Shell	411572	A508 C1. 2	0.91	.07	.005	-22	3	23*	-22	142	92*
Intermediate Shell	527828	A508 C1. 2	0.78	.05	.012	14	0	40***	14	138**	90**
Lower Shell	528658	A508 C1. 2	0.81	.05	.006	5	14	38***	5	162**	105*
Bottom Head Ring	528170	A508 C1. 2	0.87	.06	.009	-40	10	30*	-30	160	104*
Bottom Head Segment	55473-2	A533B C1. 1	---	.12	.006	-31	14	34*	-26	111	72*
Bottom Head Segment	55888-2	A533B C1. 1	---	.04	.010	-13	21	41*	-13	152	99*
Bottom Head Segment	55888-2	A533B C1. 1	---	.04	.010	5	14	34*	5	149	97*
Bottom Head Dome	55979-2	A533B C1. 1	---	.04	.011	-13	14	34*	-13	120	78*
Inter.-To-Lower Shell Girth Weld			0.70	.05	.010	-76	---	10*	-50	---	127**
Heat Affected Zone			---	---	---	-67	---	-50*	-67	---	127***

* Estimated per NUREG-0800, "Standard Review Plan," Section 5.3.2, "Pressure-Temperature Limits"

** Based on transverse surveillance program data.

*** Based on axially oriented surveillance program data.

Table 5.2-12 Reactor Vessel Internals, Including Emergency Core Cooling Systems

Forgings	SA182 Type F304
Plates	SA240 Type 304
Pipes	SA312 Type 304 Seamless or SA376 Type 304
Tubes	SA213 Type 304 or SA249 Type 304
Bars	SA479 Type 304 & 410
Castings	SA351 Gr CF8 or CF8A
Bolting	SA193 GrB8M (65 MYS/90MTS) Code Case 1618 Inconel 750 SA461 GR688
Nuts	SA193 Gr B-8
Locking Devices	SA479 Type 304
Weld Buttering	Stainless Steel Weld Metal Analysis A-7
Guide Tube Split Pins	Type 316 Strain Hardened Stainless Steel ASME Section II SA-193, Grade B8M Class 2, Code Case N-60; and SA-194 Grade 8M

Table 5.2-13 Maximum RPV Displacements (Node #3)

Displacement Component	Reactor Vessel Inlet Nozzle Break
UX (in)	Max. 0.4603E-2 Min. -0.3687E-1
UY (in)	Max. 0.1657E-1 Min. -0.3158E-1
UZ (in)	Max. 0.6437E-05 Min. -0.8259E-01

Table 5.2-14 Maximum Reactor Vessel Support Loads For Postulated Pipe Rupture Conditions

LOCA Maximum Vertical Load Per Support Including Deadweight	LOCA Maximum Horizontal Load Per Support
2900 Kips	3000 Kips

Table 5.2-15 Steam Generator Lower Support Member Stresses

	Member Stresses, Percent of Allowable Loading Condition		
Member	**Normal**	**Upset**	**Faulted**
17	--	67.7	60.3
18	--	60.2	53.4
19	--	39.6	42.5
20	--	35.1	58.3
22	--	15.2	31.6
23	--	3.2	5.7
24	--	5.5	13.9
26	--	45.1	66.9
27	--	31.2	41.3
28	--	55.7	57.2
29	--	61.7	62.5
38	41.2	68.2	71.5
39	43.3	75.4	68.8
40	55.9	85.5	61.2
41	33.9	74.1	67.0

Table 5.2-16 Steam Generator Upper Support Member Stresses

	Member Stresses, Percent of Allowable Loading Condition		
Member	**Normal**	**Upset**	**Faulted**
71,72,73,74,75	--	43.3	33.5
76,77	--	22.6	52.5
78,79	--	31.7	33.6
81,82	--	22.6	56.0
33-70	--	9.3	24.4

Table 5.2-17 RC Pump Support Member Stresses

	Member Stresses, Percent of Allowable Loading Condition		
Member	**Normal**	**Upset**	**Faulted**
10	--	16.2	56.9
11	--	33.4	91.1
12	--	61.7	98.7
7	59.9	73.3	98.2
8	61.5	51.3	79.9
9	29.0	98.3	82.5

Table 5.2-18 Primary Pipe Restraint Loads And Stresses

Restraint	Loading Condition	Maximum Load (kips)	Stress % of Allowable
Crossover Leg Bumper, SG side	Upset	194	5.8
	Faulted	1985[a]	83.2
Crossover Leg Bumper, RCP side	Upset	147	5.2
	Faulted	1179[a]	70.2

NOTES:

(a) This load is not the maximum, but when applied with the opposite bumper load, the restraint reaches its maximum stress.

Table 5.2-19 Reactor Vessel Support Loads

Loading Condition	Vertical (kips)	Tangential (kips)
Dead Weight	530.	0.
Thermal	290.	0.
Pressure	10.	0.
OBE	1696.	756.
SSE	1696.	756.
LOCA[(a)]	2900.	3000.
Normal	830.	0.
Upset	2526.	756.
Faulted	4606.	3756.

NOTES:

(a) Includes dead weight

Table 5.2-20 Reactor Vessel Support Stresses

Loading Condition	Actual Stress (ksi)	Allowable Stress (ksi)	Actual Stress, % of Allowable
Normal	$P_M = 3.78$	Sm = 21.7	17.4
	$P_M + P_B = 3.98$	$1.5\ S_m = 32.6$	12.2
Upset	$P_M = 5.22$	Sm = 21.7	24.1
	$P_M + P_B = 6.67$	$1.5\ S_m = 32.6$	20.5
Faulted	$P_M = 22.60$	$0.7\ S_u = 41.5$	54.5
	$P_M + P_B = 44.51$	$1.05\ S_u = 62.3$	71.4

Table 5.2-21 CRDM Head Adaptor Bending Moments

	LOCA* (in-kip)	Combination of SSE and LOCA** (in-kip)
Longest CRDM	29.3	278.6
Shortest CRDM	52.0	124.2

* Maximum moments are from reactor vessel inlet nozzle break. This break has been eliminated by application of LBB analysis.

** Reference:WCAP-13754

THIS PAGE INTENTIONALLY BLANK

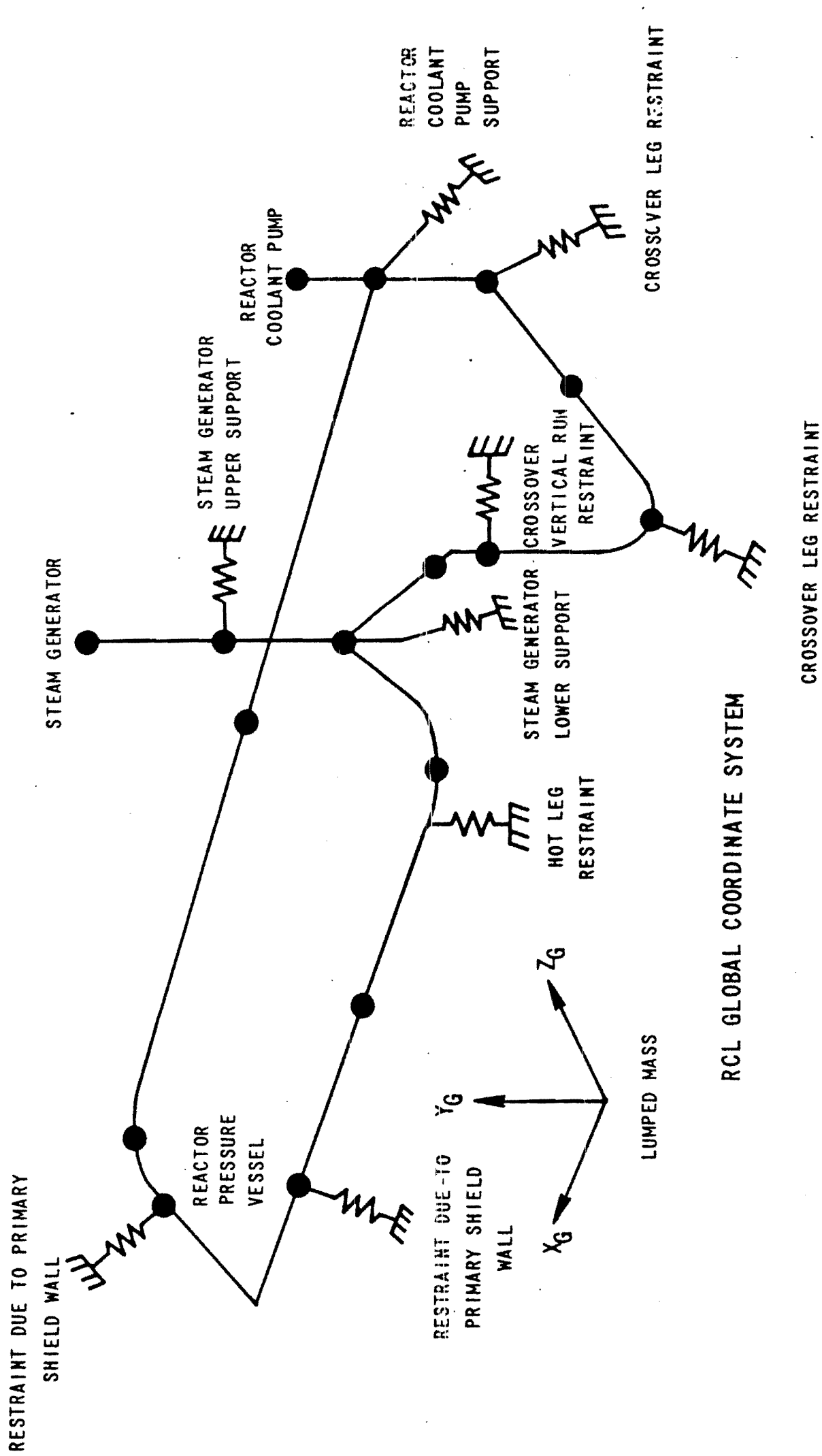

Figure 5.2-1 Reactor Coolant Loop Supports System, Dynamic Structural Mode

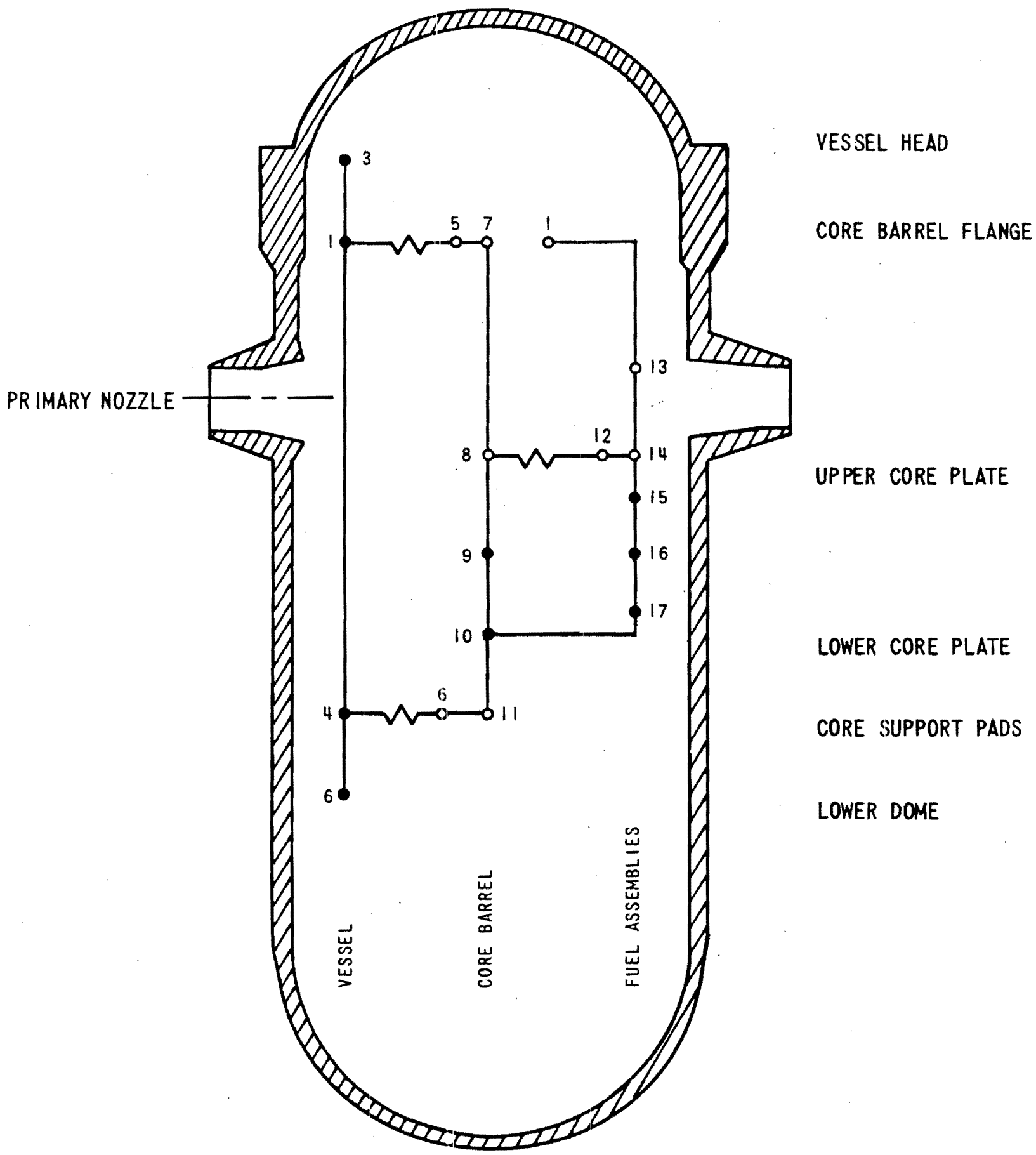

Figure 5 2-2. Reactor Pressure Vessel Lumped – Mass Model.

Figure 5.2-2 Reactor Pressure Vessel Lumped - Mass Model

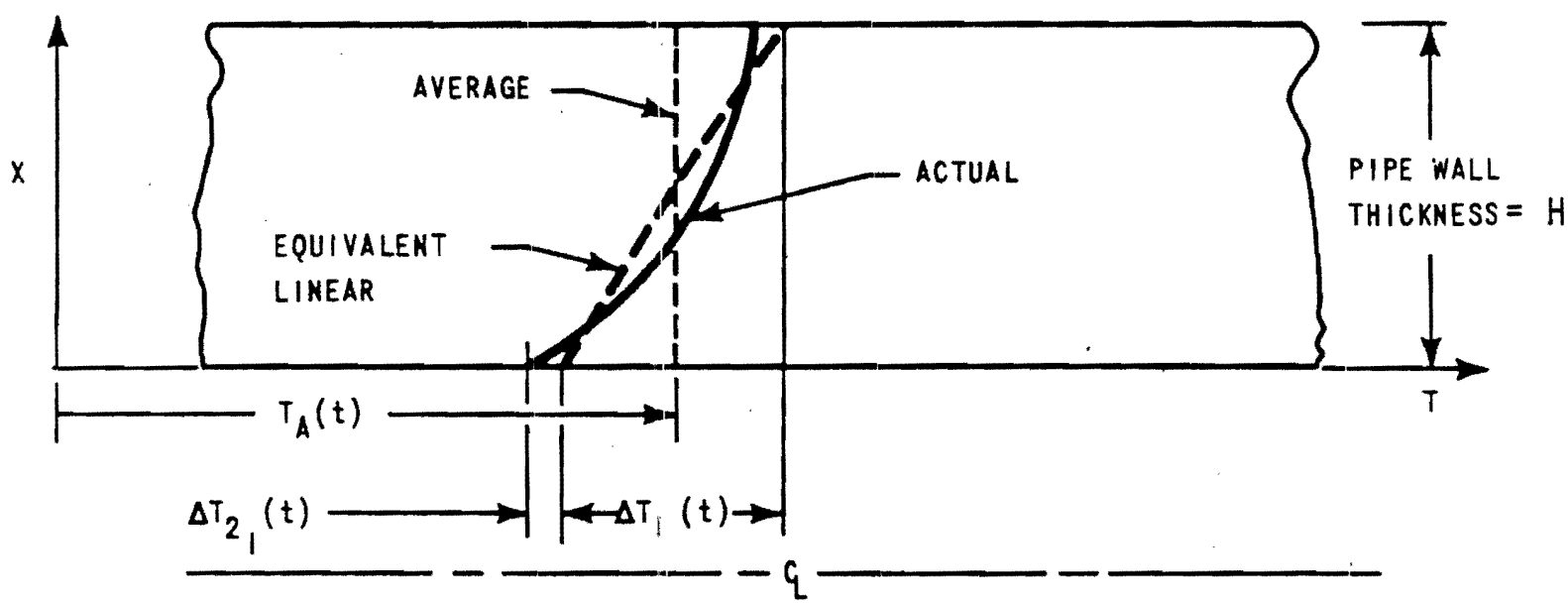

Figure 5.2-3 Through-Wall Thermal Gradients

Figure 5.2-3 Through-Wall Thermal Gradients

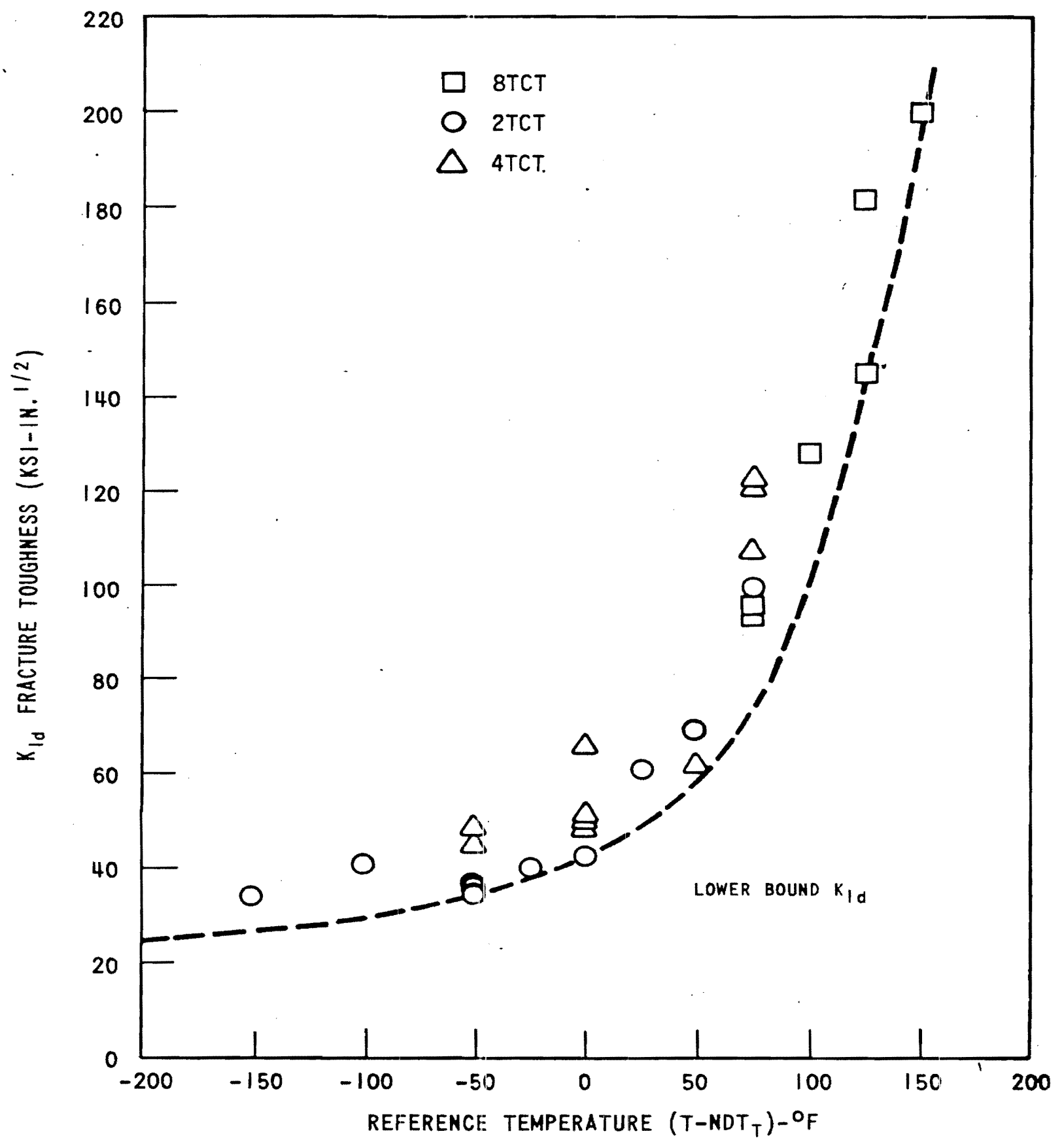

Figure 5.2-4. K_{Id} Lower Bound Fracture Toughness A533V (Reference WCAP 7623) GRADE B Class 1

Figure 5.2-4 K_{Id} Lower Bound Fracture Toughness A533V (Reference WCAP 7623) Grade B Class 1

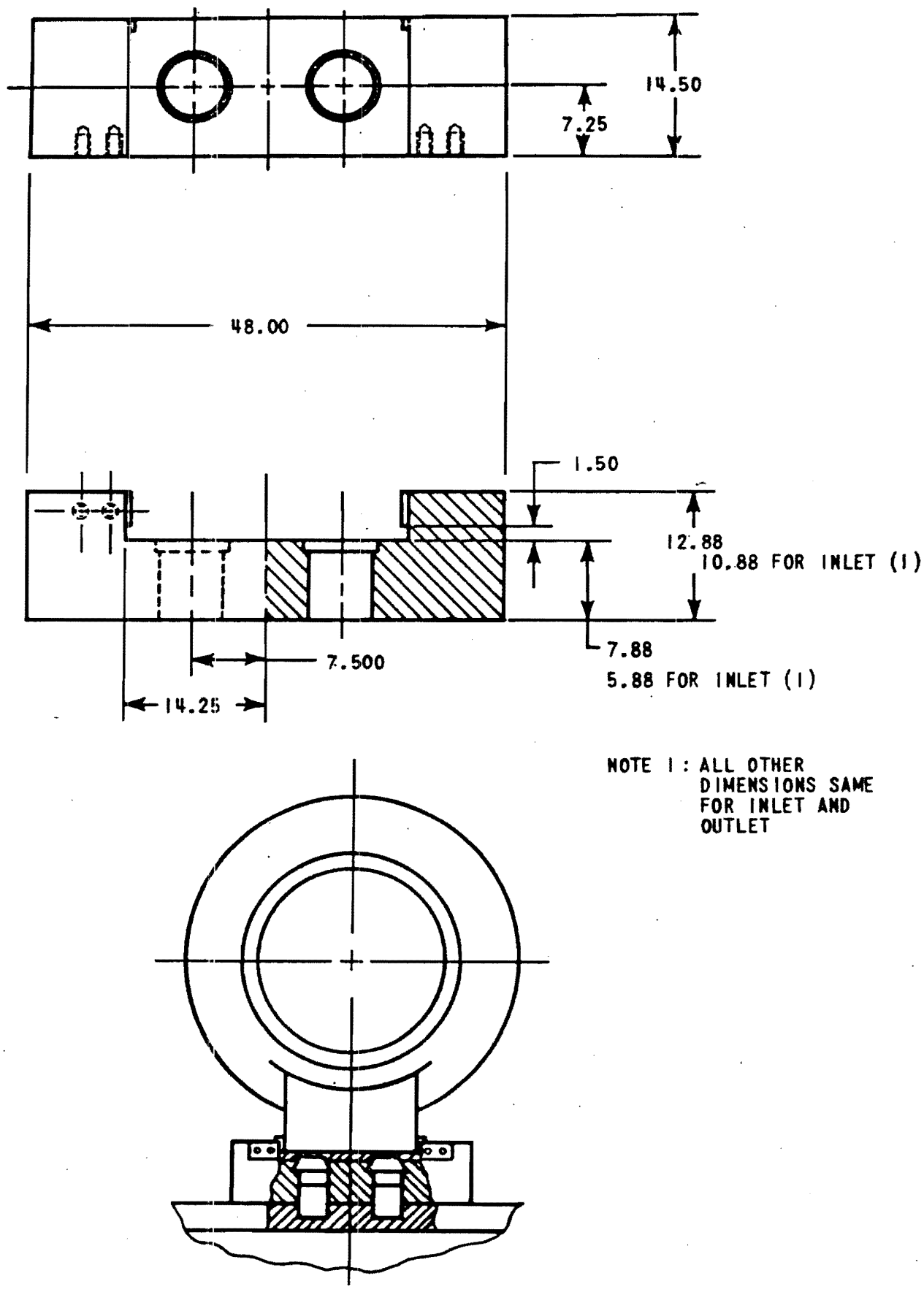

Figure 5.2-5 Reactor Vessel Support Shoe

Added by Amendment 31

Figure 5.2-5 Reactor Vessel Support Shoe

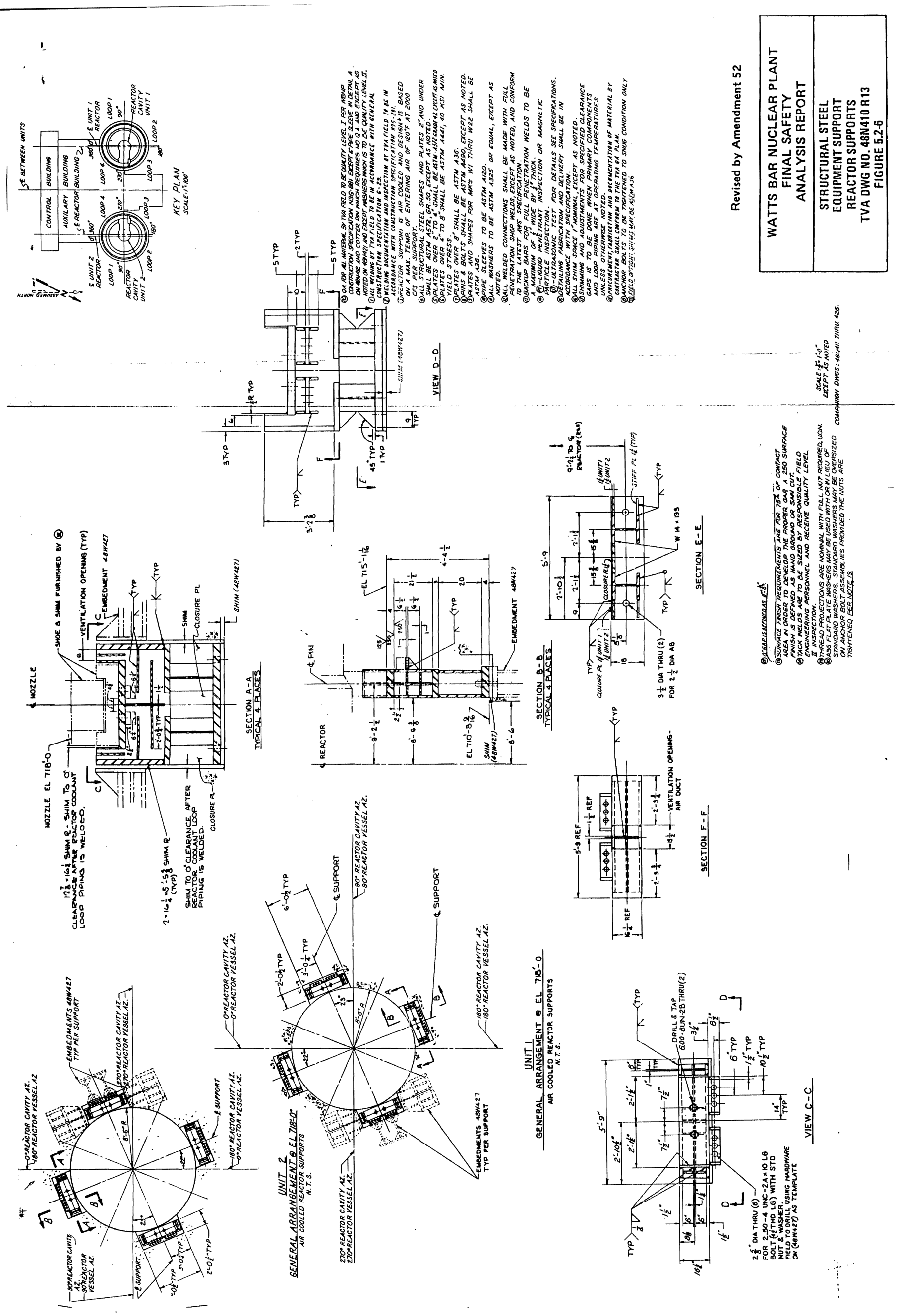

Revised by Amendment 52

WATTS BAR NUCLEAR PLANT
FINAL SAFETY
ANALYSIS REPORT

STRUCTURAL STEEL
EQUIPMENT SUPPORT
REACTOR SUPPORTS
TVA DWG NO. 48N410 R13
FIGURE 5.2-6

Figure 5.2-6 Structural Steel Equipment Support Reactor Supports

Figure 5.2-7a Deleted by Amendment 97

Figure 5.2-7b Deleted by Amendment 97

Figure 5.2-8a Deleted by Amendment 97

Figure 5.2-8b Deleted by Amendment 97

11,706-3

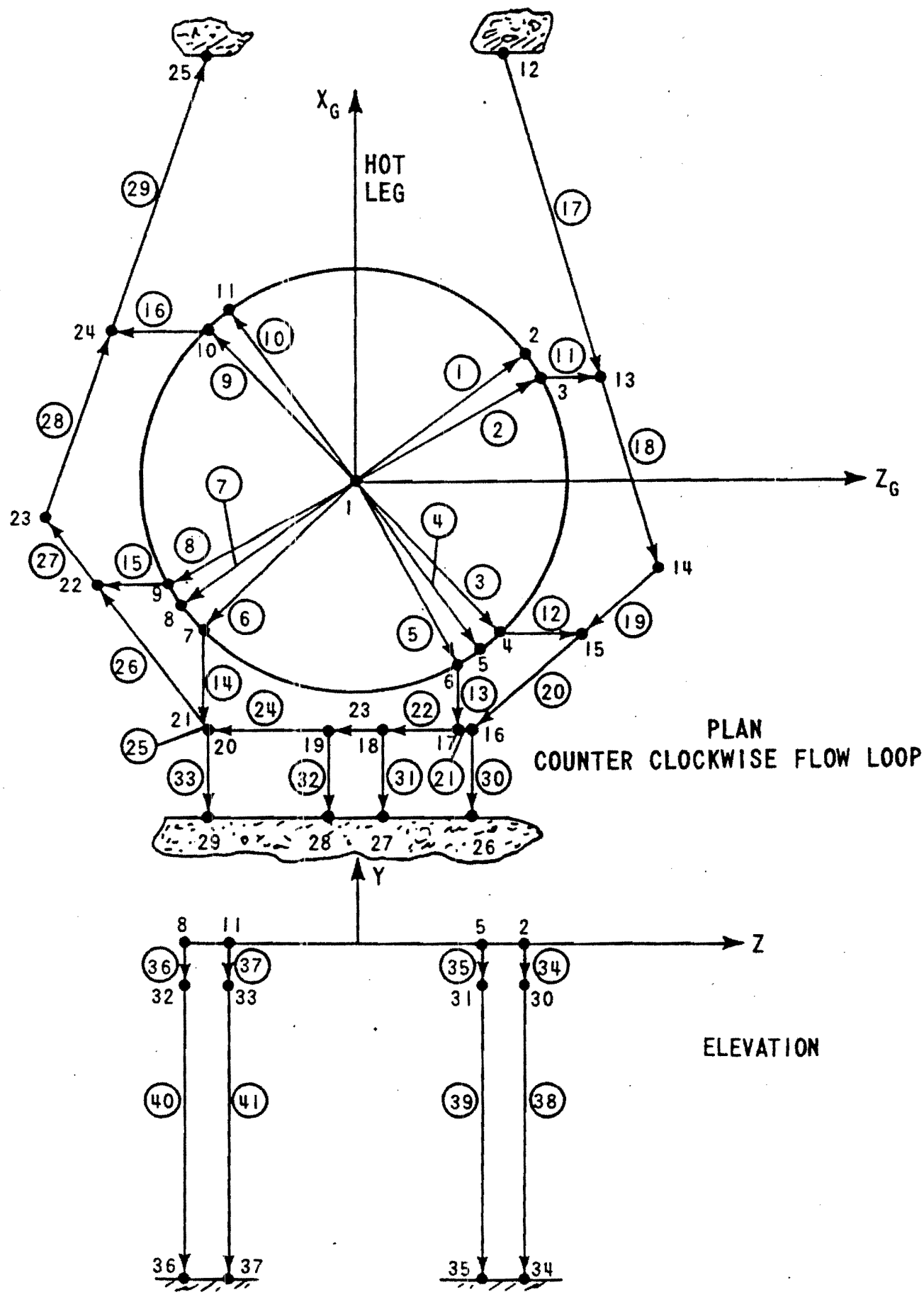

Figure 5.2-9 Steam Generator Lower Support Model

Added by Amendment 31

Figure 5.2-9 Steam Generator Lower Support Model

11,706-4

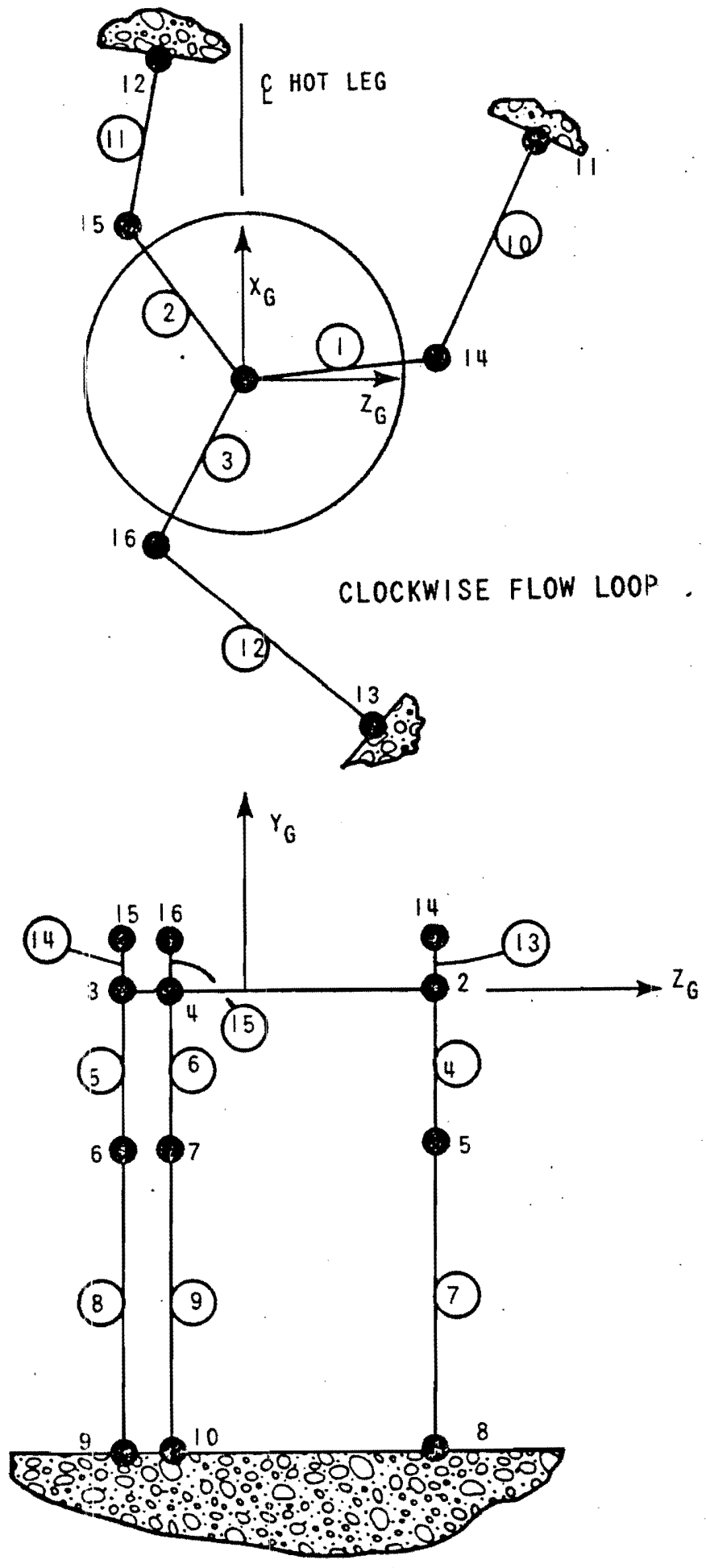

Figure 5.2-10 Reactor Coolant Pump Support Model

Added by Amendment 31

Figure 5.2-10 Reactor Coolant Pump Support Model

11,706-5

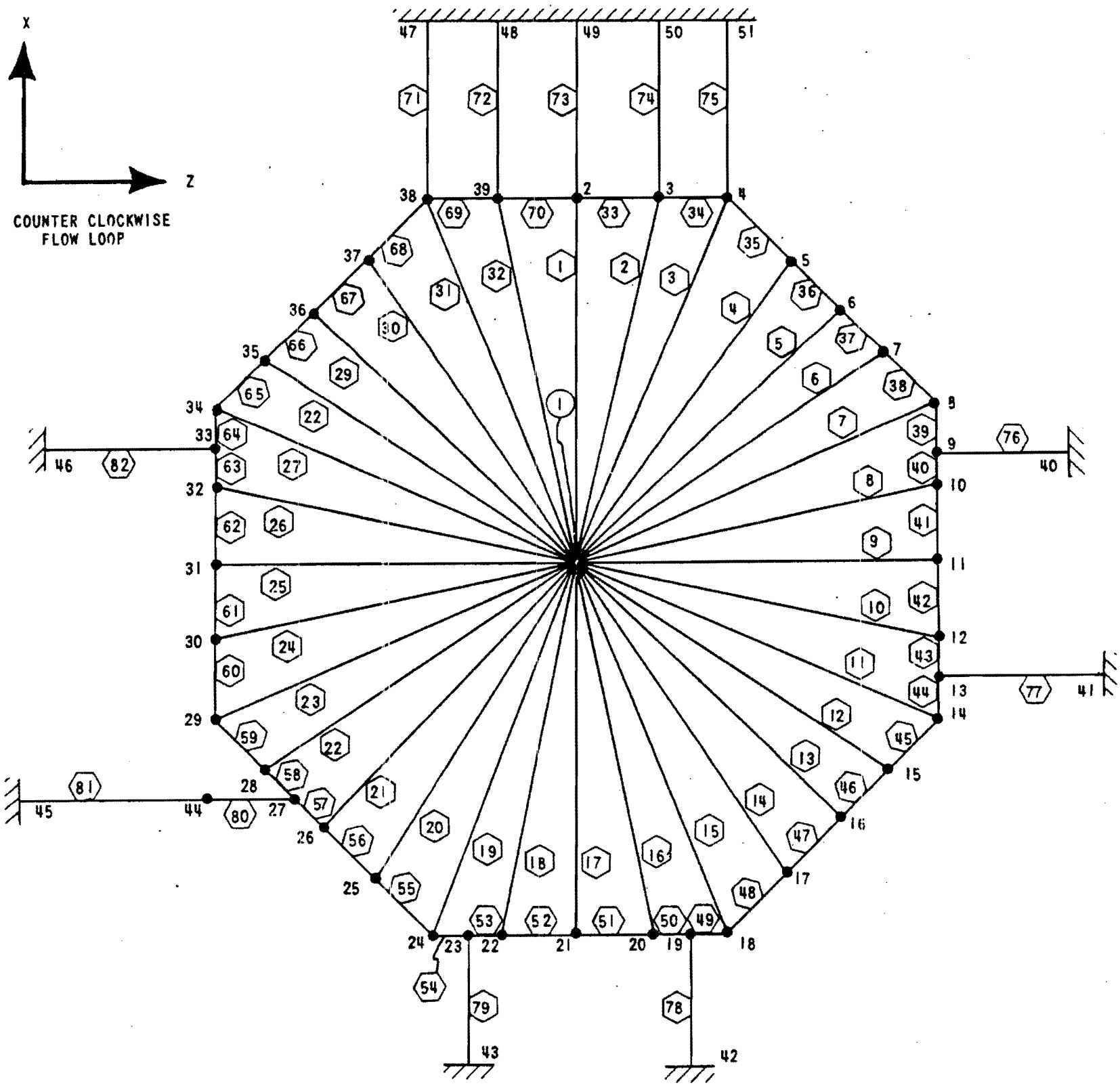

Figure 5.2-11 Steam Generator Upper Model

Added by Amendment 31

Figure 5.2-11 Steam Generator Upper Model

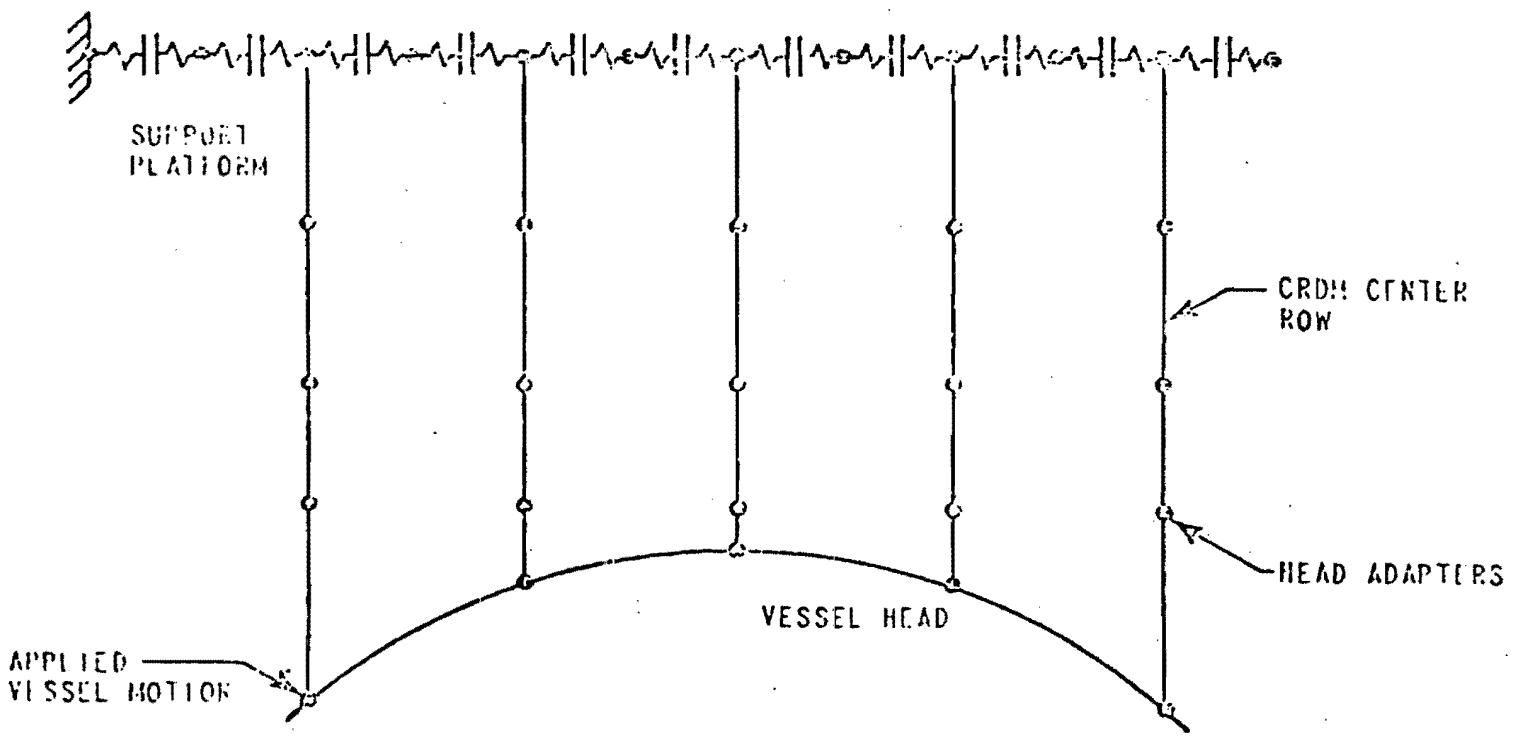

Figure 5.2-12 Nonlinear CRDM Row Model

Added by Amendment 33

Figure 5.2-12 Nonlinear CRDM Row Model

Figure 5.2-13 Deleted in Amendment 78

Figure 5.2-14 Deleted in Amendment 78

Figure 5.2-15 Deleted in Amendment 49

Figure 5.2-16 Deleted in Amendment 49

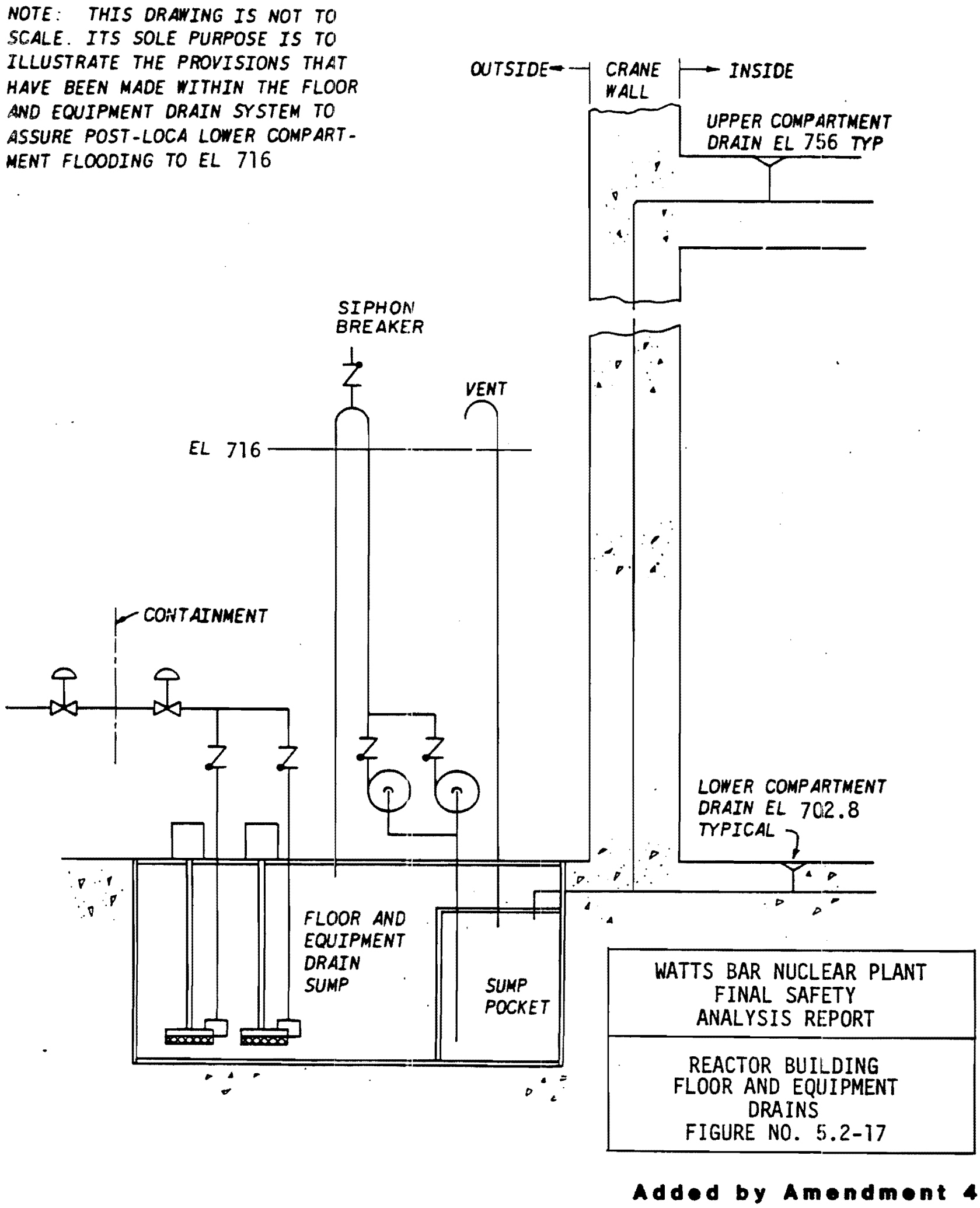

Added by Amendment 46

Figure 5.2-17 Reactor Building Floor and Equipment Drains

THIS PAGE INTENTIONALLY BLANK

5.3 THERMAL HYDRAULIC SYSTEM DESIGN

5.3.1 Analytical Methods and Data

The thermal and hydraulic design bases of the Reactor Coolant System are described in Section 5.5, “Component and Subsystem Design,” and in Section 4.4, “Thermal and Hydraulic Design,” in terms of core heat generation rates, DNBR, analytical models, peaking factors and other relevant aspects of the reactor.

5.3.2 Operating Restrictions On Pumps

The minimum Net Positive Suction Head (NPSH) and minimum seal injection flow rate must be established before operating the reactor coolant pumps. With the minimum 6 gpm labyrinth seal injection flow rate established, the operator will have to verify that the system pressure satisfies NPSH requirements. See Section 5.5.1, “Reactor Coolant Pumps.”

5.3.3 Power-Flow Operating Map (BWR)

Not applicable to Pressurized Water Reactors.

5.3.4 Temperature-Power Operating Map

The relationship between reactor coolant system temperature and power is shown in Figure 5.3-1.

The effects of reduced core flow due to inoperative pumps is discussed in Section 5.5.1, 15.2.5, and 15.3.4. Natural circulation is discussed in Section 15.4.2.

5.3.5 Load Following Characteristics

The reactor coolant system is designed on the basis of steady state operation at full power heat load. The reactor coolant pumps utilize constant speed drives as described in Section 5.5.1 and the reactor power is controlled to maintain average coolant temperature at a value which is a linear function of load, as described in Section 7.7.1. Operation with one pump out of service requires adjustment only in reactor trip system setpoints as discussed in Section 7.2. However, Technical Specifications do not allow continued operation with one pump out of service.

5.3.6 Transient Effects

Transient effects on the reactor coolant system are evaluated in Chapter 15.

5.3.7 Thermal and Hydraulic Characteristics Summary Table

The thermal and hydraulic characteristics are given in Table 4.4-1.

THIS PAGE INTENTIONALLY BLANK

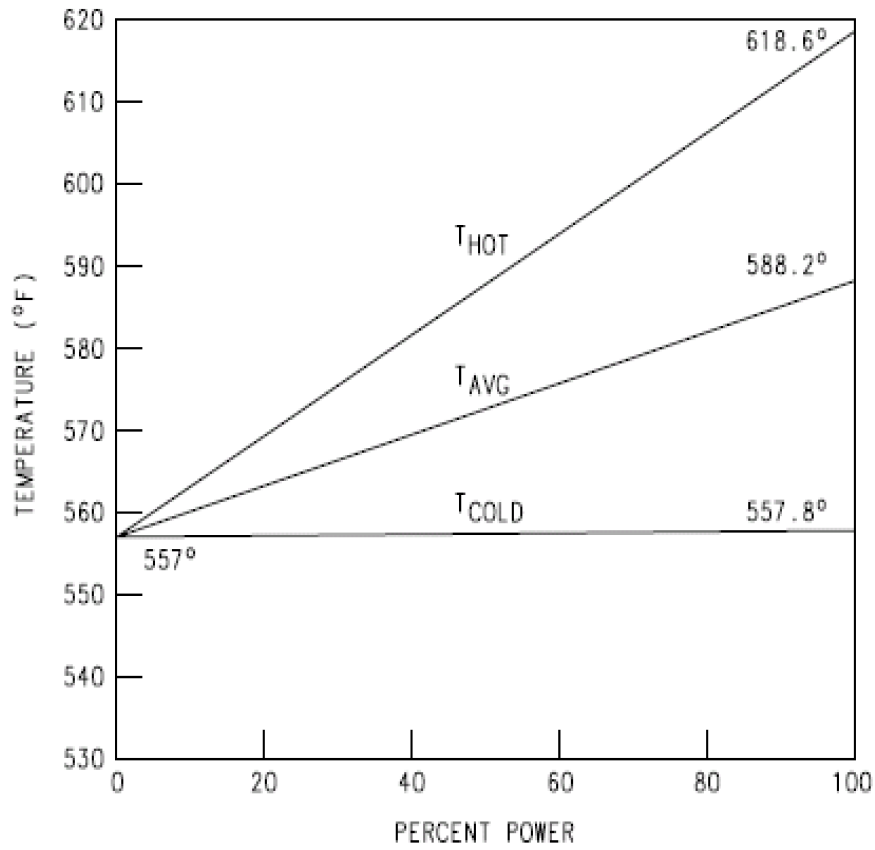

CAD MAINTAINED DRAWING

THERMAL HYDRAULIC SYSTEM DESIGN

AMENDMENT 95

WATTS BAR NUCLEAR PLANT
FINAL SAFETY
ANALYSIS REPORT

REACTOR COOLANT
SYSTEM TEMPERATURE
PERCENT POWER MAP
FIGURE 5.3-1

Figure 5.3-1 Reactor Coolant System Temperature - Percent Power Map

THIS PAGE INTENTIONALLY BLANK

5.4 REACTOR VESSEL AND APPURTENANCES

Section 5.4 has been divided into four principal Sections; design bases, description, evaluation, and tests and inspections for the reactor vessel and its appurtenances consistent with the requirements of the introductory paragraph of 5.4 of the Standard Format and Content Guide, Revision 1. The following specific information required by the guide is cross referenced below.

	Guide Reference	FSAR Section(s)
5.4.1	Protection of Closure Studs	5.4.2.2
5.4.2	Special Processes for Fabrication and Inspection	5.4.2.1, 5.4.4
5.4.3	Features for Improved Reliability	5.4.1, 5.4.2.1
5.4.4	Quality Assurance Surveillance	5.4.2, 5.4.4
5.4.5	Materials and Inspections	5.2.3, 5.4.4
5.4.6	Reactor Vessel Design Data	Table 5.4-1
5.4.7	Reactor Vessel Schematic (BWR)	Not Applicable

5.4.1 Design Bases

5.4.1.1 Codes and Specifications

The vessel is Safety Class 1. Design and fabrication of the reactor vessel is carried out in strict accordance with ASME Section III, Class 1. Material specifications are in accordance with the ASME Code requirements and are given in Section 5.2.3.

5.4.1.2 Design Transients

Cyclic loads are introduced by normal power changes, reactor trip, startup and shutdown operations. These design base cycles are selected for fatigue evaluation and constitute a conservative design envelope for the projected plant life. Vessel analyses result in a usage factor that is less than 1.

With regard to the thermal and pressure transients involved in the loss of coolant accident, the reactor vessel is analyzed to confirm that the delivery of cold emergency core cooling water to the vessel following a loss-of-coolant accident does not cause a loss of integrity of the vessel.

The design specifications require analysis to prove that the vessel is in compliance with the fatigue and stress limits of Section III of the ASME Boiler and Pressure Vessel Code. The loadings and transients specified for the analysis are based on the most severe conditions expected during service. The heatup and cooldown rates imposed by plant operating limits are maintained within 100°F per hour in accordance with PTLR. These rates are reflected in the vessel design specifications.

A control rod housing failure does not cause propagation of failure to adjacent housings or to any other part of the reactor coolant system boundary.

Design transients are discussed in detail in Section 5.2.1.5.

5.4.1.3 Protection Against Non-Ductile Failure

Protection against non-ductile failure is discussed in Section 5.2.4.

5.4.1.4 Inspection

The internal surface of the reactor vessel is capable of inspection periodically using visual and/or nondestructive techniques over the accessible areas. During refueling, the vessel cladding is capable of being inspected in certain areas between the closure flange and the primary coolant inlet nozzles, and, if deemed necessary, the core barrel is capable of being removed, making the entire inside vessel surface accessible.

The closure head is examined visually during each refueling. Optical devices permit a selective inspection of the cladding, control rod drive mechanism nozzles, and the gasket seating surface. The knuckle transition piece, which is the area of highest stress of the closure head, is accessible on the outer surface for visual inspection, dye penetrant or magnetic particle, and ultrasonic testing. The closure studs can be inspected periodically using visual, magnetic particle and/or ultrasonic techniques.

Equipment is designed such that the requirements of the ASME Section XI, Rules for Inservice Inspection of Nuclear Reactor Coolant Systems, can be met.

5.4.2 Description

The reactor vessel is cylindrical with a welded hemispherical bottom head and a removable, bolted, flanged, and gasketed, hemispherical upper head. The reactor vessel flange and head are sealed by two hollow metallic O-rings. Seal leakage is detected by means of two leakoff communications: one between the inner and outer ring and one outside the outer O-ring. The vessel contains the core, core support structures, control rods, and other parts directly associated with the core. The reactor vessel closure head contains head adapters. These head adapters are tubular members, attached by partial penetration welds to the underside of the closure head. The upper end of these adapters contain acme threads for the assembly of control rod

drive mechanisms or instrumentation adapters. The seal arrangement at the upper end of these adapters consists of a welded flexible canopy seal. Inlet and outlet nozzles are located symmetrically around the vessel. Outlet nozzles are arranged on the vessel to facilitate optimum layout of the Reactor Coolant System equipment. The inlet nozzles are tapered from the coolant loop vessel interfaces to the vessel inside wall to reduce loop pressure drop.

The bottom head of the vessel contains penetration nozzles for connection and entry of the nuclear in-core instrumentation. Each nozzle consists of a tubular member made of either an Inconel or an Inconel stainless steel composite tube. Each tube is attached to the inside of the bottom head by a partial penetration weld.

Internal surfaces of the vessel which are in contact with primary coolant are weld overlay with 0.125 inch minimum of stainless steel or Inconel. The exterior of the reactor vessel is insulated with canned stainless steel reflective sheets. The insulation is a minimum of three inches thick and contoured to enclose the top, sides and bottom of the vessel. All the insulation modules are removable but the access to vessel side insulation is limited by the surrounding concrete.

5.4.2.1 Fabrication Processes

(1) The use of severely sensitized stainless steel as a pressure boundary material has been prohibited and has been eliminated by either a select choice of material or by programming the method of assembly.

(2) Minimum preheat requirements have been established for pressure boundary welds using low alloy weld material. Special preheat requirements have been added for stainless steel cladding of low stressed areas. Controlled limitations are placed on preheat requirements by Westinghouse. The purpose of placing limitations on preheat requirements is the addition of precautionary measures to decrease the probabilities of weld cracking by decreasing temperature gradients, lower susceptibility to brittle transformation, prevention of hydrogen embrittlement and reduction in peak hardness.

(3) The control rod drive mechanism head adapter threads and surfaces of the guide studs are chrome plated to prevent possible galling of the mated parts.

(4) At all locations in the reactor vessel where stainless steel and Inconel are joined, the final joining beads are Inconel weld metal in order to prevent cracking.

(5) The location of full penetration weld seams in the upper closure head and vessel bottom head are restricted to areas that permit accessibility during inservice inspection.

(6) The stainless steel clad surfaces are sampled to assure that composition and delta ferrite requirements are met.

Principal design parameters of the reactor vessel are given in Table 5.4-1.

5.4.2.2 Protection of Closure Studs

Westinghouse refueling procedures require the studs, nuts and washers to be removed from the reactor closure and be placed in storage racks during preparation for refueling. The storage racks are then removed from the refueling cavity and stored at convenient locations on the containment operating deck prior to removal of the reactor closure head and refueling cavity flooding. Therefore the reactor closure studs are never exposed to the borated refueling cavity water.

The stud holes in the reactor flange are sealed with special plugs before removing the reactor closure thus preventing leakage of the borated refueling water into the stud holes.

5.4.3 Evaluation

5.4.3.1 Steady State Stresses

Evaluation of steady state stresses is discussed in Section 5.2.1.10.

5.4.3.2 Fatigue Analysis Based on Transient Stresses

Fatigue analysis on transient stresses is discussed in Sections 5.2.1.5 and 5.2.1.10.

5.4.3.3 Thermal Stresses Due to Gamma Heating

The stresses due to gamma heating in the vessel wall are also calculated by the vessel vendor and combined with the other design stresses. They are compared with the code allowable limit for mechanical plus thermal stress intensities to verify that they are acceptable. The gamma stresses are low and thus have a negligible effect on the stress intensity in the vessel.

5.4.3.4 Thermal Stresses Due to Loss of Coolant Accident

Fracture mechanics evaluation of the reactor vessel due to thermal stresses following a loss of coolant accident are discussed in Section 5.2.1.10.

5.4.3.5 Heatup and Cooldown

Heatup and cooldown requirements for the reactor vessel material are discussed in Section 5.2.4 and in the Technical Specifications.

5.4.3.6 Irradiation Surveillance Programs

In the surveillance program, the evaluation of the radiation damage is based on preirradiation testing of Charpy V-notch and tensile specimens and post-irradiation testing of Charpy V-notch, tensile and compact tension (CT) fracture mechanics test specimens, as required. The program is directed toward evaluation of the effect of radiation on the fracture toughness of reactor vessel steels based on the transition temperature approach and the fracture mechanics approach. The program conforms with ASTM-E-185-82 "Recommended Practice for Surveillance Tests for Nuclear Reactor Vessels", and 10 CFR Part 50, Appendix H.

The reactor vessel surveillance program uses six specimen capsules. The capsules are located in guide baskets welded to the outside of the neutron shield pads and are positioned directly opposite the center portion of the core. The capsules can be removed when the vessel head is removed and can be replaced when the internals are removed. The six capsules contain reactor vessel steel specimens, oriented both parallel and normal (tangential and axial) to the principal working direction of the limiting base material located in the core region of the reactor vessel and associated weld metal and weld heat affected zone metal. Altogether, the six capsules contain 54 tensile specimens, 360 Charpy V-notch specimens (which include weld metal and weld heat affected zone material), 72 CT specimens, and six bend bar specimens. Archive material sufficient for two additional capsules has been retained.

Dosimeters, including Ni, Cu, Fe, Co-Al, Cd shielded Co-Al, Cd shielded Np-237, and Cd shielded U-238, are placed in filler blocks drilled to contain them. The dosimeters permit evaluation of the flux seen by the specimens and the vessel wall.

In addition, thermal monitors made of low melting point alloys are included to monitor the maximum temperature of the specimens. The specimens are enclosed in a tight fitting stainless steel sheath to prevent corrosion and ensure good thermal conductivity. The complete capsule is helium leak tested. As part of the surveillance program, a report of the residual elements in weight percent to the nearest 0.01% has been made for surveillance material and as deposited weld metal.

Each of the six capsules contains the following specimens:

Material	Number of Charpys	Number of Tensiles	Number of CT's	Number of Bend Bars
Limiting Base Material*	15	3	4	1
Limiting Base Material**	15	3	4	-
Weld Metal***	15	3	4	-
Heat Affected Zone	15	-	-	-

* Specimens oriented in the major working direction.

** Specimens oriented normal to the major working direction.

*** Weld metal was selected per ASTM E185-73.

The following dosimeters and thermal monitors are included in each of the six capsules:

Dosimeters

Iron
Copper
Nickel
Cobalt-Aluminum (0.15% Co)
Cobalt-Aluminum (Cadmium shielded)

U-238 (Cadmium shielded)
NP-237 (Cadmium shielded)

Thermal Monitors

97.5% Pb, 2.5% Ag (579°F Melting Point)
97.5% Pb, 1.75% Ag, 0.75% Sn (590°F Melting Point)

The fast neutron exposure of the specimens occurs at a faster rate than that experienced by the vessel wall, with the specimens being located between the core and the vessel. Since these specimens experience accelerated exposure and are actual samples from the materials used in the vessel, the transition temperature shift measurements are representative of the vessel at a later time in life. Data from CT fracture toughness specimens are expected to provide additional information for use in determining allowable stresses for irradiated material.

Correlations between the calculations and the measurements of the irradiated samples in the capsules, assuming the same neutron spectrum at the samples and the vessel inner wall, are described in Section 5.4.3.6.1. They have indicated good agreement. The calculations of the integrated flux at the vessel wall are conservative. The anticipated degree to which the specimens will perturb the fast neutron flux and energy distribution will be considered in the evaluation of the surveillance specimen data. Verification and possible readjustment of the calculated wall exposure will be made by use of data on all capsules withdrawn. The tentative schedule for removal of the capsules for post-irradiation testing is as shown in Table 4.0-1 of the Pressure and Temperature Limits Reports (PTLR).

5.4.3.6.1 Measurement of Integrated Fast Neutron (E>l.0MeV) Flux at the Irradiation Samples

The use of passive neutron sensors such as those included in the internal surveillance capsule dosimetry sets does not yield a direct measure of the energy dependent neutron flux level at the measurement location. Rather, the activation or fission process is a measure of the integrated effect that the time- and energy-dependent neutron flux has on the target material over the course of the irradiation period. An accurate assessment of the average flux level and, hence, time integrated exposure (fluence) experienced by the sensors may be developed from the measurements only if the sensor characteristics and the parameters of the irradiation are well known. In particular, the following variables are of interest:

(1) The measured specific activity of each sensor

(2) The physical characteristics of each sensor

(3) The operating history of the reactor

(4) The energy response of each sensor

(5) The neutron energy spectrum at the sensor location

In this section the procedures used to determine sensor specific activities, to develop reaction rates for individual sensors from the measured specific activities and the operating history of the reactor, and to derive key fast neutron exposure parameters from the measured reaction rates are described.

5.4.3.6.1.1 Determination of Sensor Reaction Rates

The specific activity of each of the radiometric sensors is determined using established ASTM procedures. Following sample preparation and weighing, the specific activity of each sensor is determined by means of a high purity germanium (Unit 1); lithium drifted germanium, Ge(Li) (Unit 2), gamma spectrometer. In the case of the surveillance capsule multiple foil sensor sets, these analyses are performed by direct counting of each of the individual wires; or, as in the case of U-238 and Np-237 fission monitors, by direct counting preceded by dissolution and chemical separation of cesium from the sensor.

The irradiation history of the reactor over its operating lifetime is determined from power plant generating records. In particular, operating data are extracted on a monthly basis from reactor startup to the end of the capsule irradiation period. For the sensor sets utilized in the surveillance capsule irradiations, the half-lives of the product isotopes are long enough that a monthly histogram describing reactor operation has proven to be an adequate representation for use in radioactive decay corrections for the reactions of interest in the exposure evaluations.

Having the measured specific activities, the operating history of the reactor, and the physical characteristics of the sensors, reaction rates referenced to full power operation are determined from the following equation:

$$R = \frac{A}{N_0 F Y \sum_j \frac{P_j}{P_{ref}} C_j [1 - e^{-\lambda t_j}] e^{-\lambda t_d}}$$

where:

A = measured specific activity provided in terms of disintegrations per second per gram of target material (dps/gm).

R = reaction rate averaged over the irradiation period and referenced to operation at a core power level of P_{ref} expressed in terms of reactions per second per nucleus of target isotope (rps/nucleus).

N_0 = number of target element atoms per gram of sensor.

F = weight fraction of the target isotope in the sensor material.

Y = number of product atoms produced per reaction.

P_j = average core power level during irradiation period j (MW).

P_{ref} =maximum or reference core power level of the reactor (MW).

C_j = calculated ratio of φ(E > 1.0 MeV) during irradiation period j to the time weighted average φ(E > 1.0 MeV) over the entire irradiation period.

λ = decay constant of the product isotope (sec^{-1}).

t_j = length of irradiation period j (sec).

t_d = decay time following irradiation period j (sec).

and the summation is carried out over the total number of monthly intervals comprising the total irradiation period.

(Unit 1 Only)
In the above equation, the ratio P_j/P_{ref} accounts for month by month variation of power level within a given fuel cycle. The ratio C_j is calculated for each fuel cycle and accounts for the change in sensor reaction rates caused by variations in flux level due to changes in core power spatial distributions from fuel cycle to fuel cycle. Since the neutron flux at the measurement locations within the surveillance capsules is dominated by neutrons produced in the peripheral fuel assemblies, the change in the relative power in these assemblies from fuel cycle to fuel cycle can have a significant impact on the activation of neutron sensors. For a single cycle, irradiation C_j = 1.0. However, for multiple cycle irradiations, particularly those employing low leakage fuel management, the additional C_j correction must be utilized in order to provide accurate determinations of the decay corrected reaction rates for the dosimeter sets contained in the surveillance capsules.

(Unit 2 Only)
In the above equation, the ratio P_j/P_{ref} accounts for month by month variation of power level within a given fuel cycle. The ratio C_j is calculated for each fuel cycle and accounts for the change in sensor reaction rates caused by variations in flux level due to changes in core power spatial distributions from fuel cycle to fuel cycle. For a single cycle irradiation C_j = 1.0. However, for multiple cycle irradiations, particularly those employing low leakage fuel management, the additional C_j correction must be utilized.

5.4.3.6.1.2 Corrections to Reaction Rate Data

Prior to using the measured reaction rates in the least squares adjustment procedure discussed in Section 5.4.3.6.1.3, additional corrections are made to the U-238 measurements to account for the presence of U-235 impurities in the sensors as well as to adjust for the build-in of plutonium isotopes over the course of the irradiation.

In addition to the corrections made for the presence of U-235 in the U-238 fission sensors, corrections are also made to both the U-238 and Np-237 sensor reaction rates to account for gamma ray induced fission reactions occurring over the course of the irradiation.

5.4.3.6.1.3 Least Squares Adjustment Procedure

(Unit 1 Only)
Least squares adjustment methods provide the capability of combining the measurement data with the neutron transport calculation resulting in a best estimate neutron energy spectrum with associated uncertainties. Best estimates for key exposure parameters such as neutron fluence (E > 1.0 MeV) or iron atom displacements (dpa) along with their uncertainties are then easily obtained from the adjusted spectrum. The use of measurements in combination with the analytical results reduces the uncertainty in the calculated spectrum and acts to remove biases that may be present in the analytical technique.

In general, the least squares methods, as applied to pressure vessel fluence evaluations, act to reconcile the measured sensor reaction rate data, dosimetry reaction cross-sections, and the calculated neutron energy spectrum within their respective uncertainties. For example,

$$R_j \pm \delta_{Rj} = \sum_{g} (\sigma_{ig} \pm \delta_{\sigma_{ig}})(\phi_g \pm \delta_{\phi_g})$$

relates a set of measured reaction rates, R_j, to a single neutron spectrum, Φ_g, through the multi-group dosimeter reaction cross-section, σ_{ig}, each with an uncertainty δ.

The use of the least squares adjustment methods in light water reactor (LWR) dosimetry evaluations is not new. The American Society for Testing and Materials (ASTM) has addressed the use of adjustment codes in ASTM Standard E 944, “Application of Neutron Spectrum Adjustment Methods in Reactor Surveillance,” and many industry workshops have been held to discuss the various applications. For example, the ASTM-EURATOM Symposia on Reactor Dosimetry holds workshops on neutron spectrum unfolding and adjustment techniques at each of its biannual conferences.

The primary objective of the least squares evaluation is to produce unbiased estimates of the neutron exposure parameters at the location of the measurement. The analytical method alone may be deficient because it inherently contains uncertainty due to the imput assumptions to the calculation. Typically these assumptions include parameters such as the temperature of the water in the peripheral fuel assemblies, by-pass region, and downcomer regions, component dimensions, and peripheral core source. Industry consensus indicates that the use of calculation alone results in overall uncertainties in the neutron exposure parameters in the range of 15-20% (1σ).

By combining the calculated results with available measurements, the uncertainties associated with the key neutron exposure parameters can be reduced. Specifically ASTM Standard E 944 states: “The algorithms of the adjustment codes tend to decrease the variances of the adjusted data compared to the corresponding input values. The least squares adjustment codes yield estimates for the output data with

minimum variances, that is, the “best estimates.” This is the primary reason for using these adjustment procedures.” ASTM E 944 provides a comprehensive listing of available adjustment codes.

The FERRET least squares adjustment code [Ref. 4] was initially developed at the Harford Engineering Development Laboratory (HEDL) and has had extensive use in both the Liquid Metal Fast Breeder (LMFBR) program and the NRC sponsored Light Water Reactor Dosimetry Improvement Program (LWR-PV-SDIP). As a result of participation in several cooperative efforts associated with the LWR-PV-SDIP, the FERRET approach was adopted by Westinghouse in the mid-1980’s as the preferred approach for the evaluation of surveillance dosimetry. The least squares methodolgy was judged superior to the previously employed spectrum averaged cross-section approach that is totally dependent on the accuracy of the shape of the calculated neutron spectrum at the measurement locations.

The FERRET code is employed to combine the results of plant specific neutron transport calculations and multiple foil reaction rate measurements to determine best estimate values of exposure parameters in terms of both neutron fluence greater than 1.0 MeV, (Φ(E>1.0 MeV)), and iron atom displacements, (dpa), along with associated uncertainties the measurement locations.

The application of the least squares methodology requires the following input:

(1) The calculated neutron energy spectrum and associated uncertainties at the measurement location.

(2) The measured reaction rate and associated uncertainty for each sensor contained in the multiple foil set.

(3) The energy dependent dosimetry reaction cross-sections and associated uncertainties for each sensor contained in the multiple foil sensor set.

For a given application the calulated neutron spectrum is obtained from the results of plant specific neutron transport calculations applicable to the irradiation period experienced by the dosimetry sensor set. This calculation is performed using the benchmarked transport calculational methodology described in Section 5.4.3.6.2. The sensor reaction rates are derived from the measured specific activities obtained from the counting laboratory using the specific irradiation history of the sensor set to perform the radioactive decay corrections. The dosimetry reaction cross-sections and uncertainties are obtained from the SNLRML dosimetry cross-section library. [Ref. 6] The SNLRML library is an evaluated dosimetry reaction cross-section compilation recommended for use in LWR evaluations by ASTM Standard E 101 8, “Application of ASTM Evaluated Cross-Section Data Filre , Matrix E 706 (IIB).” There are no additional data or data libraries built into the FERRET code system. All of the required input is supplied externally at the time of the analysis.

The uncertainties associated with the measured reaction rates, dosimetry cross-sections, and calculated neutron spectrum are input to the least squares procedure in the form of variances and covariances. The assignment of the input uncertainties also follows the guidance provided in ASTM Standard E 944.

(Untit 2 only)
Values of key fast neutron exposure parameters are derived from the measured reaction rates using the FERRET least squares adjustment code[4]. The FERRET approach uses the measured reaction rate data, sensor reaction cross-sections, and a calculated trial spectrum as input and proceeds to adjust the group fluxes from the trial spectrum to produce a best fit (in a least squares sense) to the measured reaction rate data. The "measured" exposure parameters along with the associated uncertainties are then obtained from the adjusted spectrum.

$$f_i^{(s,\alpha)} = \sum_g A_{ig}^{(s)} \phi_g^{(\alpha)}$$

In the FERRET evaluations, a log-normal least squares algorithm weights both the trial values and the measured data in accordance with the assigned uncertainties and correlations. In general, the measured values f are linearly related to the flux φ by some response matrix A:

where i indexes the measured values belonging to a single data set s, g designates the energy group, and α delineates spectra that may be simultaneously adjusted. For example,

$$R_i = \sum_g \sigma_{ig} \phi_g$$

relates a set of measured reaction rates R_i to a single spectrum φ_g by the multigroup reaction cross-section σ_{ig}. The log-normal approach automatically accounts for the physical constraint of positive fluxes, even with large assigned uncertainties.

In the least squares adjustment, the continuous quantities (i.e., neutron spectra and cross-sections) are approximated in a multi-group format consisting of 53 energy groups. The trial input spectrum is converted to the FERRET 53 group structure using the SAND-II code[5]. This procedure is carried out by first expanding the 47 group calculated spectrum into the SAND-II 620 group structure using a SPLINE interpolation procedure in regions where group boundaries do not coincide. The 620 point spectrum is then re-collapsed into the group structure used in FERRET.

The sensor set reaction cross-sections, obtained from the ENDF/B-VI dosimetry file[6], are also collapsed into the 53 energy group structure using the SAND-II code. In this instance, the trial spectrum, as expanded to 620 groups, is employed as a weighting function in the cross-section collapsing procedure. Reaction cross-section

uncertainties in the form of a 53 x 53 covariance matrix for each sensor reaction are also constructed from the information contained on the ENDF/B-VI data files. These matrices include energy group to energy group uncertainty correlations for each of the individual reactions.

Due to the importance of providing a trial spectrum that exhibits a relative energy distribution close to the actual spectrum at the sensor set locations, the neutron spectrum input to the FERRET evaluation is obtained from plant specific calculations for each dosimetry location. While the 53 x 53 group covariance matrices applicable to the sensor reaction cross-sections are developed from the cross-section data files, the covariance matrix for the input trial spectrum is constructed from the following relation:

$$M_{g'g} = R_n^2 + R_g \, R_{g'} \, P_{g'g}$$

where R_n specifies an overall fractional normalization uncertainty (i.e., complete correlation) for the set of values. The fractional uncertainties R_g specify additional random uncertainties for group g that are correlated with a correlation matrix given by:

$$P_{g'g} = [1 - \theta] \, \delta_{g'g} + \theta \, e^{-H}$$

$$H = \frac{(g - g')^2}{2 \gamma^2}$$

where:

The first term in the correlation matrix equation specifies purely random uncertainties, while the second term describes short range correlations over a group range γ (θ specifies the strength of the latter term). The value of δ is 1 when g = g' and 0 otherwise.

5.4.3.6.2 Calculation of Integrated Fast Neutron (E > 1.0 MeV) Flux at the Irradiation Samples

Fast neutron exposure calculations for the reactor geometry are carried out using both forward and adjoint discrete ordinates transport techniques. A single forward calculation provides the relative energy distribution of neutrons for use as input to neutron dosimetry evaluations as well as for use in relating measurement results to the actual exposure at key locations in the pressure vessel wall. A series of adjoint calculations, on the other hand, establish the means to compute absolute exposure rate values using fuel cycle specific core power distributions; thus, providing a direct comparison with all dosimetry results obtained over the operating history of the reactor.

In combination, the absolute cycle specific data from the adjoint evaluations together with relative neutron energy spectra distributions from the forward calculation provided the means to:

(1) Evaluate neutron dosimetry from surveillance capsule locations.

(2) Enable a direct comparison of analytical prediction with measurement.

(3) Establish a mechanism for projection of pressure vessel exposure as the design of each new fuel cycle evolves. (Unit 2 Only)

(4) Determine plant specific bias factors to be used in the evaluation of the best estimate exposure of the reactor pressure vessel.

5.4.3.6.2.1 Reference Forward Calculation

The forward transport calculation for the reactor is carried out in r,θ geometry using the DORT two-dimensional discrete ordinates code [Ref. 1] (Unit 1); code [Ref. 8] (Unit 2) and the BUGLE-93 cross-section library [Ref. 2]. (Unit 1); library [Ref. 9] (Unit 2). The BUGLE-93 library is a 47 neutron group, ENDFB-VI based, data set produced specifically for light water reactor applications. In these analyses, anisotropy scattering is treated with a P_3 expansion of the scattering cross-sections and the angular discretization is modeled with an S_8 order of angular quadrature. The reference forward calculation is normalized to a core midplane power density characteristic of operation at the stretch rating for the reactor.

The transport calculation supporting the analysis of capsule W and subsequent capsules is carried out using the DORT discrete ordinates code and the BUGLE-96 cross-section library. [Ref. 7] The BUGLE-96 library provides 67 group coupled neutron-gamma ray cross-section data set produced specifically for Light Water Reactor (LWR) applications. In these analyses, anisotropic scattering was treated with a P_5 legendre expansion and angular discretization was modeled with an S_{16} order of angular quadrature. Energy and space dependent core power distributions, as well as system operating temperatures, were treated on fuel cycle specific basis.

The spatial core power distribution utilized in the reference forward calculation is derived from statistical studies of long-term operation of Westinghouse 4-loop plants. Inherent in the development of this reference core power distribution is the use of an out-in fuel management strategy; i.e., fresh fuel on the core periphery. Furthermore, for the peripheral fuel assemblies, a 2σ uncertainty derived from the statistical evaluation of plant to plant and cycle to cycle variations in peripheral power is used.

Due to the use of this bounding spatial power distribution, the results from the reference forward calculation establish conservative exposure projections for reactors of this design operating at the stretch rating. Since it is unlikely that actual reactor operation would result in the implementation of a power distribution at the nominal +2σ level for a large number of fuel cycles and, further, because of the widespread implementation of low leakage fuel management strategies, the fuel cycle specific

calculations for this reactor will result in exposure rates well below these conservative predictions.

5.4.3.6.2.2 Cycle Specific Adjoint Calculations

All adjoint analyses are also carried out using an S_8 order of angular quadrature and the P_3 cross-section approximation from the BUGLE-93 library. Capsule W and subsequent capsule analysis are carried out using S_{16} order of angular quadrature and the P_5 cross-section approximation from the BUGLE-96 library. Adjoint source locations are chosen at several key azimuths on the pressure vessel inner radius. In addition, adjoint calculations were carried out for sources positioned at the geometric center of all surveillance capsules. Again, these calculations are run in r,θ geometry to provide neutron source distribution importance functions for the exposure parameter of interest; in this case, φ(E > 1.0 MeV).

The importance functions generated from these individual adjoint analyses provide the basis for all absolute exposure projections and comparison with measurement. These importance functions, when combined with cycle specific neutron source distributions, yield absolute predictions of neutron exposure at the locations of interest for each of the operating fuel cycles; and, establish the means to perform similar predictions and dosimetry evaluations for all subsequent fuel cycles.

Having the importance functions and appropriate core source distributions, the response of interest can be calculated as:

$$\varphi(R_0,\theta_0) = I_r\, I_\theta\, I_E\, I(r,\theta,E)\, S(r,\theta,E)\, r\, dr\, d\theta\, dE$$

where:

$\varphi(R_0,\theta_0)$ = Neutron flux (E > 1.0 MeV) at radius R_0 and azimuthal angle θ_0.

I(r,θ,E) = Adjoint importance function at radius r, azimuthal angle θ, and neutron source energy E.

S(r,θ,E) = Neutron source strength at core location r,θ and energy E.

It is important to note that the cycle specific neutron source distributions, S(r,θ,E), utilized with the adjoint importance functions, I(r,θ,E), permit the use not only of fuel cycle specific spatial variations of fission rates within the reactor core; but, also allow for the inclusion of the effects of the differing neutron yield per fission and the variation in fission spectrum introduced by the build-in of plutonium isotopes as the burnup of individual fuel assemblies increases.

5.4.3.7 Capability for Annealing the Reactor Vessel

There are no special design features which would prohibit the in-situ annealing of the vessel. If the unlikely need for an annealing operation was required to restore the properties of the vessel material opposite the reactor core because of neutron irradiation damage, a metal temperature greater than 650°F for a period of 168 hours

maximum would be applied. Various modes of heating may be used depending on the temperature.

The reactor vessel materials surveillance program is adequate to accommodate the annealing of the reactor vessel. Sufficient specimens are available to evaluate the effects of the annealing treatment.

5.4.4 Tests and Inspections

The reactor vessel quality assurance program is given in Table 5.4-2.

5.4.4.1 Ultrasonic Examinations

(1) During fabrication, angle beam inspection of 100% of plate material was performed to detect discontinuities that may be undetected by longitudinal wave examination, in addition to the design code straight beam ultrasonic test.

(2) In addition to ASME Section III nondestructive examinations, all full penetration welds and heat affected zones in the reactor vessel were ultrasonically examined during fabrication. This test was performed upon completion of the welding and intermediate heat treatment but prior to post-weld heat treatment.

(3) The reactor vessel was examined after hydro-testing to provide a base line map for use as a reference document in relation to later pre-service and inservice inspections.

5.4.4.2 Penetrant Examinations

The partial penetration welds for the control rod drive mechanism head adapters were inspected by dye penetrant after the first layer of weld metal, after each 1/4 inch of weld metal, and the final surface. Bottom instrumentation tubes were inspected by dye penetrant after each layer of weld metal. Core support block attachment welds were inspected by dye penetrant after first layer of weld metal and after each 1/2 inch of weld metal.

5.4.4.3 Magnetic Particle Examination

The magnetic particle examination requirements below are in addition to the magnetic particle examination requirements of Section III of the ASME Code.

All magnetic particle examinations of materials and welds shall be performed in accordance with the following:

(1) Prior to the Final Post Weld Heat Treatment - Only by the Prod, Coil or Direct Contact Method.

(2) After the Final Post Weld Heat Treatment - Only by the Yoke Method.

The following surfaces and welds shall be examined by magnetic particle methods. The acceptance standards shall be in accordance with Section III of the ASME Code.

Surface Examinations

(1) Magnetic particle examine all exterior vessel and head surfaces after the hydrostatic test.

(2) Magnetic particle examine all exterior closure stud and nut surfaces after threading. Continuous circular and longitudinal magnetization shall be used.

(3) Magnetic particle examine all inside diameter surfaces of carbon and low alloy steel products that have their properties enhanced by accelerated cooling. This inspection to be performed after forming and machining (if performed) and prior to cladding.

Weld Examination

Magnetic particle examine weld metal buildup for vessel supports, closure head lifting lugs and refueling seal ledge to the reactor vessel after the first layer and each 1/2 inch of weld metal is deposited.

(1) All pressure boundary welds shall be examined after back chipping or back grinding operations.

5.4.4.4 Inservice Inspection

The full penetration welds in the following areas of the installed irradiated reactor vessel are available for visual and/or nondestructive inspection.

(1) Vessel shell - from the inside surface.

(2) Primary coolant nozzles - from the inside surface.

(3) Closure head - from the inside and outside surfaces.

Bottom head - from the outside surface.

(4) Closure studs, nuts and washers.

(5) Field welds between the reactor vessel, nozzles and the main coolant piping.

(6) Vessel flange seal surface.

The design considerations which have been incorporated into the system design to permit the above inspections are as follows:

(1) All reactor internals are completely removable. The tools and storage space required to permit these inspections are provided.

(2) The closure head is stored dry on the reactor operating deck during refueling to facilitate direct visual inspection.

(3) All reactor vessel studs, nuts and washers can be removed to dry storage during refueling.

(4) Removable plugs are provided in the primary shield. The insulation covering the welds joining the nozzles to the main coolant piping may be removed.

(5) Access holes are provided in the lower internals barrel flange to allow remote access to the reactor vessel internal surfaces between the flange and the nozzles without removal of the internals.

The reactor vessel presents access problems because of the radiation levels and remote underwater accessibility to this component. Because of these limitations on access to the reactor vessel, several steps have been incorporated into the design and manufacturing procedures in preparation for the periodic nondestructive tests which are required by the ASME inservice inspection code. These are:

(1) Shop ultrasonic examinations were performed on all internally clad surfaces to an acceptance and repair standards to assure an adequate cladding bond to allow later ultrasonic testing of the base metal from inside surface. The size of cladding bonding defect allowed was 1/4 inch by 3/4 inch.

(2) The design of the reactor vessel shell is a clean, uncluttered cylindrical surface to permit future positioning of the test equipment without obstruction.

(3) The weld deposited clad surface on both sides of the welds to be inspected are specifically prepared to assure meaningful ultrasonic examinations.

(4) During fabrication, all full penetration pressure boundary welds are ultrasonically examined in addition to Code examinations.

(5) After the shop hydrostatic testing, selected areas of the reactor vessel are ultrasonically tested and mapped to facilitate the inservice inspection program.

The vessel design and construction enables inspection and compliance with ASME Section XI.

REFERENCES

(1) RSIC Computer Code Collection CCC-543, "TORT-DORT Two- and Three-Dimensional Discrete Ordinates Transport, Version 2.8.14", January 1994. (Unit 1 Only).

(2) RSIC Data Library Collection DLE-175, “BUGLE-93 Production and Testing of the VITAMIN-B6 Fine Group and BUGLE-93 Broad Group Neutron/Photon Cross-Section Libraries Derived from ENDF/B-VI Nuclear Data”, April 1994. (Unit 1 Only).

(3) McElroy, W.N., et al, "LWR Pressure Vessel Surveillance Dosimetry Improvement Program: PCA Experiments and Blind Test," NUREG/CR-1861, July 1981.

(4) Schmittroth, E. A., "FERRET Data Analysis Code", HEDL-TME-79-40, Hanford Engineering Development Laboratory, Richland, Washington, September 1979.

(5) McElroy, W. N., et al, "A Computer-Automated Iterative Method of Neutron Flux Spectra Determined by Foil Activation," AFWL-TR-67-41, Volumes I-IV, Air Force Weapons Laboratory, Kirkland AFB, NM, July 1967.

(6) RSIC Data Library Collection DLC-178, "SNLRML Recommended Dosimetry Cross-Section Compendium", July 1994.

(7) RSIC Data Library Collection DLC-185, “BUGLE-96, Coupled 47 Neutron, Gramma-Ray Group Cross-Section Library Derived from ENDF/B-V1 for LWR Shielding and Pressure Vessel Dosimetry Applications,” March 1996.

(8) Soltesz, R. G., et al, "Nuclear Rocket Shielding Methods, Modification, Updating, and Input Data Preparation, Volume 5 - Two-Dimensional Discrete Ordinates Technique," WANL-PR-(LL)-034, August 1970. (Unit 2 Only).

(9) "ORNL RSIC Data Library Collection DLC-76, SAILOR coupled self-shielded, 47 Neutron, 20 Gamma-Ray, P_3, Cross-Section Library for Light Water Reactors." (Unit 2 Only).

Table 5.4-1 Reactor Vessel Design Parameters

Design/Operating Pressure, psig	2485/2235
Design Temperature, °F	650
Overall Height of Vessel and Closure Head, ft-in (Bottom Head Outside Diameter to top of Control Rod Mechanism Adapter)	43-10
Thickness of Insulation, minimum, in	3
Number of Reactor Closure Head Studs	54
Diameter of Reactor Closure Head/Studs, in (minimum shank)	6-3/4
Inside Diameter of Flange, in	167
Outside Diameter of Flange, in	205
Inside Diameter at Shell, in	173
Inlet Nozzle Inside Diameter, in	27-1/2
Outlet Nozzle Inside Diameter, in	29
Clad Thickness, minimum, in	1/8
Lower Head Thickness, minimum, in	5-15/32
Vessel Belt-Line Thickness, minimum, in	8-15/32
Closure Head Thickness, in	6-1/2

Table 5.4-2 Reactor Vessel Quality Assurance Program

	RT*	UT*	PT*	MT*
Forgings				
1. Flanges		yes		yes
2. Studs, Nuts		yes		yes
3. Head Adapters		yes	yes	
4. Head Adapter Tube		yes	yes	
5. Instrumentation Tube		yes	yes	
6. Main Nozzles		yes		yes
7. Nozzle Safe Ends		yes	yes	
Plates		yes		yes
Weldments				
1. Main Seam	yes	yes		yes
2. CRD Head Adapter Connection			yes	
3. Instrumentation Tube connection			yes	
4. Main Nozzle	yes	yes		yes
5. Cladding		yes	yes	
6. Nozzle Safe Ends	yes	yes	yes	
7. Head Adapter Forging to Head Adapter Tube	yes		yes	
8. All Ferritic Welds Accessible After Hydrotest		yes		yes
9. Safe End to Nozzle Welds		yes	yes	
10. Seal Ledge				yes
11. Head Lift Lugs				yes
12. Core Pad Welds			yes	

* RT - Radiographic

UT - Ultrasonic

PT - Dye Penetrant

MT - Magnetic Particle

5.5 COMPONENT AND SUBSYSTEM DESIGN

5.5.1 Reactor Coolant Pumps

5.5.1.1 Design Bases

The reactor coolant pump (RCP) ensures an adequate core cooling flow rate and hence sufficient heat transfer, to maintain a Departure from Nucleate Boiling Ratio (DNBR) greater than 1.3 within the parameters of operation. The required net positive suction head is by conservative pump design always less than that available by system design and operation.

Sufficient pump rotation inertia to provide adequate flow during coastdown is provided by a flywheel, in conjunction with the impeller and motor assembly. This flow following an assumed loss of pump power provides the core with adequate cooling.

The reactor coolant pump motor is tested, without mechanical damage, at overspeeds up to and including 125% of normal speed. The integrity of the reactor coolant pump and flywheel during a LOCA is demonstrated in Reference [1].

The reactor coolant pump is shown in Figure 5.5-1. The reactor coolant pump design parameters are given in Table 5.5-1.

Code and material requirements are provided in Section 5.2.

5.5.1.2 Design Description

The reactor coolant pump is a vertical, single stage, centrifugal, shaft seal pump designed to pump large volumes of main coolant at high temperatures and pressures.

The pump consists of three areas. From bottom to top, they are the hydraulics, the shaft seals, and the motor.

(1) The hydraulic section consists of an impeller, diffuser, casing, thermal barrier, heat exchanger, lower radial bearing, bolting ring, motor stand, and pump shaft.

(2) The shaft seal section consists of three devices. They are the number 1 controlled leakage, film riding face seal, and the number 2 and number 3 rubbing face seals. These seals are contained within the main flange and seal housing.

(3) The motor section consists of a vertical solid shaft, squirrel cage induction type motor, an oil lubricated double Kingsbury type thrust bearing, two oil lubricated radial bearings, and a flywheel.

Attached to the bottom of the pump shaft is the impeller. The reactor coolant is drawn up through the impeller, discharged through passages in the diffuser, and out through the discharge nozzle in the side of the casing. Above the impeller is a thermal barrier heat exchanger which limits heat transfer between hot system water and seal injection water.

High pressure seal injection water is introduced through the thermal barrier wall. A portion of this water flows through the seals; the remainder flows down the shaft through the thermal barrier where it acts as a buffer to prevent system water from entering the radial bearing and seal section of the unit. The thermal barrier heat exchanger provides a means of cooling system water to an acceptable level in the event that seal injection flow is lost. The water lubricated journal-type pump bearing, mounted above the thermal barrier heat exchanger, has a self-aligning spherical seat.

The RCP motor bearings are of conventional design. The radial bearings are the segmented pad type, and the thrust bearings are tilting pad Kingsbury bearings. All are oil lubricated. The lower radial bearing and the thrust bearings are submerged in oil, and the upper radial bearing is oil fed from an impeller integral with the thrust runner.

The motor is a Class F thermalastic epoxy insulated, squirrel cage induction motor with water cooled air exhaust coolers. The rotor and stator are of standard construction and are cooled by air. Six resistance temperature detectors are located throughout the stator to sense the winding temperature. The top of the motor consists of a flywheel and an anti-reverse rotation device.

FOR UNIT 1 ONLY
Each of the reactor coolant pumps is equipped with two separate vibration pickup systems. The first system utilizes two vibration pickups mounted at the top of the motor support stand. They are mounted in a horizontal plane to detect radial vibrations of the pump frame. One is aligned perpendicular to and the other is aligned parallel to the pump discharge. Vibration signals from this system are sent to a multipoint selector switch mounted outside of the reactor containment. The signals may be read on a vibration meter which shows amplitude and/or amplitude and frequency of vibration. Maximum allowable amplitude for this frame mounted system is 0.003 inches, maximum for balancing limits and 0.005 inches shutdown limit.

FOR UNIT 1 ONLY
The second vibration monitoring system consists of two noncontacting pickups mounted below each pump coupling and used to monitor shaft vibration. Signals from all of the noncontacting pickups are sent to the LPMS cabinet located outside containment. Vibration amplitudes may be read on permanently mounted and alarmed amplitude meters located inside the LPMS cabinet. Maximum allowable shaft vibration amplitude is 0.020 inches double amplitude, shutdown limit.

FOR UNIT 2 ONLY
Each of the reactor coolant pumps is equipped with a single synchronized vibration pickup system. The system utilizes two vibration pickups mounted at the top of the motor support stand. They are mounted in a horizontal plane to detect radial vibrations of the pump frame. One is aligned perpendicular to and the other is aligned parallel to the pump discharge. Maximum allowable amplitude for the frame mounted pickups is 0.003 inches, maximum for balancing limits and 0.005 inches shutdown limit. Two noncontacting pickups mounted below each pump coupling are used to monitor shaft vibration. Maximum allowable shaft vibration amplitude is 0.020 inches double amplitude, shutdown limit. One accelerometer is mounted on the pump main flange to detect vibrations of the pump casing.

FOR UNIT 2 ONLY
Vibration signals from this system are sent to the Reactor Coolant Pump Vibration Monitoring cabinet 1-R-176 located outside containment. The signals may be read on a permanently mounted and alarmed vibration indicator located inside the Reactor Coolant Pump Vibration Monitoring cabinet, on the Bently-Nevada computer in the Unit 2 Computer Room and on the Integrated Computer System (ICS).

Parts of the pump in contact with the reactor coolant are austenitic stainless steel except for seals, bearings and special parts. Component cooling water is supplied to the two oil coolers on the pump motor and to the pump thermal barrier heat exchanger.

The pump shaft, seal housing, thermal barrier, bolting ring and motor stand can be removed from the casing without disturbing the reactor coolant piping. The flywheel is available for inspection by removing the cover.

The performance characteristic, shown in Figure 5.5-2, is common to all of the fixed speed mixed flow pumps, and the "knee" at about 45% design flow introduces no operational restrictions, since the pumps operate at full speed.

5.5.1.3 Design Evaluation

5.5.1.3.1 Pump Performance

The RCPs are sized to deliver flow at rates which equal or exceed the required flow rates. Initial reactor coolant system tests confirm the total delivery capability. Thus, assurance of adequate forced circulation coolant flow is provided prior to initial plant operation.

The reactor trip system ensures that pump operation is within the assumptions used for loss of coolant flow analyses, which also assures that adequate core cooling is provided to permit an orderly reduction in power if flow from a reactor coolant pump is lost during operation.

An extensive test program was conducted for several years to develop the controlled leakage shaft seal for pressurized water reactor applications. Long term tests were conducted on less than full scale prototype seals as well as on full size seals.

Operating plants continue to demonstrate the satisfactory performance of the controlled leakage shaft seal pump design.

The support of the stationary member of the number 1 seal ("seal ring") is such as to allow large deflections, both axial and tilting, while still maintaining its controlled gap relative to the seal runner. Even if all the graphite were removed from the pump bearing, the shaft could not deflect far enough to cause opening of the controlled leakage gap. The "spring-constant" of the hydraulic forces associated with the maintenance of the gap is high enough to ensure that the ring follows the runner under very rapid shaft deflections.

Testing of pumps with the number 1 seal entirely removed (full reactor pressure on the number 2 seal) has shown that relatively small leakage rates would be maintained for long periods of time (approximately 100 hours) even if the number 1 seal fails entirely. The plant operator is warned of this condition by the increase in number 1 seal leakoff and has time to close the number 1 seal leakoff line, and to conduct a safe plant shutdown without significant leakage of reactor coolant to the containment. Thus, it may be concluded that gross leakage from the pump does not occur, even if seals were to suffer physical damage.

The effect of loss of offsite power on the pump itself is to cause a temporary stoppage in the supply of injection flow to the pump seals and also of the cooling water for seal and bearing cooling. The emergency diesel generators are started automatically due to loss of offsite power so that component cooling flow is automatically restored. Seal water injection flow is subsequently restored by restarting a charging pump on diesel power.

5.5.1.3.2 Coastdown Capability

It is important to reactor operation that the reactor coolant continues to flow for a short time after reactor trip. In order to provide this flow in a station blackout condition or loss-of-offsite-power, each reactor coolant pump is provided with a flywheel. Thus, the rotating inertia of the pump, motor and flywheel is employed during the coastdown period to continue the reactor coolant flow. The coastdown flow transients are provided in the figures in Section 15.3.

The pump/motor system is designed for the design basis earthquake at the site and the integrity of the bearings is described in Section 5.5.1.3.4. Hence, it is concluded that the coastdown capability of the pumps is maintained even under the most adverse case of a blackout coincident with the design basis earthquake. Core flow transients are described in Section 15.2 text and figures.

5.5.1.3.3 Flywheel Integrity

Demonstration of integrity of the reactor coolant pump flywheel is discussed in Section 5.2.6. Additional discussion is contained in Reference [1].

5.5.1.3.4 Bearing Integrity

The design requirements for the reactor coolant pump bearings are primarily aimed at ensuring a long life with negligible wear, thereby giving accurate alignment and smooth operation over long periods of time. The surface-bearing stresses are held at a very low value, and even under the most severe seismic transients do not begin to approach loads which cannot be adequately carried for short periods of time.

Low oil levels in the lube oil sumps signal an alarm in the control room and upon verification could require shutting down of the pump. Each motor bearing contains embedded temperature detectors, and so initiation of failure, separate from loss of oil, is indicated and alarmed in the control room as a high bearing temperature. This also could require pump shutdown. If these indications are ignored, and the bearing proceeded to failure, the low melting point of Babbitt metal on the pad surfaces ensures that sudden seizure of the shaft will not occur. In this event the motor continues to operate, since it has sufficient reserve capacity to drive the pump under such conditions. However, the high torque required to drive the pump requires high current which will lead to the motor being shut down by the electrical protection systems.

5.5.1.3.5 Locked Rotor

It may be hypothesized that the pump impeller might severely rub on a stationary member and then seize. Analysis has shown that under such conditions, assuming instantaneous seizure of the impeller, the pump shaft fails in torsion just below the coupling to the motor, disengaging the flywheel and motor from the shaft. This constitutes a loss of coolant flow in the loop. Following such a postulated seizure, the motor continues to run without any overspeed, and the flywheel maintains its integrity, as it is still supported on a shaft with two bearings. Flow transients are provided in the figures in Section 15.4 for the assumed locked rotor.

There are no other credible sources of shaft seizure other than impeller rubs. Any seizure of the pump bearing is precluded by graphite in the bearing. Any seizure in the seals results in a shearing of the anti-rotation pin in the seal ring. The motor has adequate power to continue pump operation even after the above occurrences. Indications of pump malfunction in these conditions are initially detected by high temperature signals from the bearing water temperature detector, and excessive number 1 seal leakoff indications, respectively. Following these signals, pump vibration levels are checked. Excessive vibration indicates mechanical trouble and the pump is shut down for investigation.

5.5.1.3.6 Critical Speed

The reactor coolant pump rotor/bearing system is designed so that its operating speed is below its first critical speed.

5.5.1.3.7 Missile Generation

Each component of the pump is analyzed for missile generation. Any fragments of the motor rotor would be contained by the heavy stator. The same conclusion applies to the pump impeller because the small fragments that might be ejected would be contained by the heavy casing.

5.5.1.3.8 Pump Cavitation

The minimum net positive suction head required by the RCP at running speed is approximately 250 feet (approximately 80.5 psig hot and 108 psig cold). In order for the controlled leakage seal to operate correctly it is necessary to have a minimum differential pressure of 200 psi across the seal. During filling and venting operation a minimum primary loop pressure of 325 psig is required before the reactor coolant pump may be operated. At this pressure the net positive suction head requirement is exceeded and the pump can be successfully operated.

5.5.1.3.9 Pump Overspeed Considerations

For turbine trips actuated by either the reactor trip system or the turbine protection system, the generator and RCPs are maintained connected to the external network for approximately 30 seconds (or less due to underfrequency/undervoltage) to prevent any pump overspeed condition.

An electrical fault requiring immediate trip of the generator (with resulting turbine trip) could result in an overspeed condition. However, the turbine control system and the turbine intercept valves limit the overspeed to less than 120%. As additional backup, the turbine protection system has a mechanical overspeed protection trip, usually set at about 110% (of turbine speed). In case a generator trip de-energizes the pump busses, the RCP motors will be transferred to offsite power within 6 to 10 cycles.

5.5.1.3.10 Anti-Reverse Rotation Device

Each of the RCPs is provided with an anti-reverse rotation device in the motor. This anti-reverse mechanism consists of five pawls mounted on the outside diameter of the flywheel, a serrated ratchet plate mounted on the motor frame, a spring return for the ratchet plate, and two shock absorbers.

After the motor has slowed and come to a stop, the dropped pawls engage the ratchet plate and, as the motor tends to rotate in the opposite direction, the ratchet plate also rotates until it is stopped by the shock absorbers. The rotor remains in this position until the motor is energized again. When the motor is started, the ratchet plate is returned to its original position by the spring return.

As the motor begins to rotate, the pawls drag over the ratchet plate. When the motor reaches sufficient speed, the pawls are bounced into an elevated position and are held in that position by friction resulting from centrifugal forces acting upon the pawls. Considerable shop testing and plant experience with the design of these pawls have shown high reliability of operation.

5.5.1.3.11 Shaft Seal Leakage

Leakage along the RCP shaft is controlled by three shaft seals arranged in series such that reactor coolant leakage to the containment is essentially zero. Charging flow is directed to each RCP via a seal water injection filter. It enters the pump through a connection on the thermal barrier flange and flows into the cavity between the main flange and the thermal barrier. The injection water flows downward to the radial bearing where it then divides into two paths. A portion flows down through the thermal barrier labyrinth and past the cooling coils into the reactor coolant system. The remainder flows upward through and around the radial bearing and into the seal area. This flow provides an inlet pressure on the number 1 seal and a controlled flow through the seal. Above the seal most of the flow leaves the pump via the number 1 seal discharge line. Minor flow passes through the number 2 seal and discharge line. A standpipe is provided to assure a minimum backpressure on the number 2 seal and a constant pressure on the number 3 seal. A very small leakage flows through the number 3 seal. This arrangement assures essentially zero leakage of reactor coolant or trapped gases from the pump.

5.5.1.3.12 Seal Discharge Piping

Discharge pressure from the number 1 seal is reduced to that of the volume control tank. Water from each pump number 1 seal is piped to a common manifold, and through the seal-water return filter and through the seal water heat exchanger where the temperature is reduced to the temperature normally maintained in the volume control tank. The number 2 and number 3 leakoff lines dump number 2 and 3 seal leakage to the reactor coolant drain tank.

5.5.1.3.13 Spool Piece

The application of a removable spool piece in the RCP shaft serves to facilitate the inspection and maintenance of the pump seal system without breaking any of the fluid, electrical, or instrumentation connections to the motor and without removal of the motor. Thus it serves to reduce plant downtime for pump maintenance, and also to reduce personnel radiation exposure due to the reduced time in the proximity of the primary coolant loop.

5.5.1.3.14 Motor Air Coolers

The internal parts of the motor are cooled by air. Integral vanes on each end of the rotor draw air in through cooling slots in the motor frame. This air passes through the motor with particular emphasis on the stator end turns. It is then ducted to the external air/water heat exchangers. Each motor has two such coolers, mounted diametrically opposite to each other. In passing through the coolers the air is cooled to below 123°F so that minimum heat is rejected to the containment from the motors.

5.5.1.3.15 Discharge Nozzle Weir

Each RCP has a five-inch high weir built into its discharge nozzle. This weir functions to inhibit flow from the ECCS (safety injection and accumulator) back into the RCP loop seal during a small break LOCA. ECCS flow thus is directed toward the reactor vessel

downcomer, enhancing core cooling. The small break LOCA analysis for Watts Bar models these weirs.

5.5.1.4 Tests and Inspections

The RCPs can be inspected in accordance with ASME Section XI, Code for Inservice Inspection of Nuclear Reactor Coolant Systems. Any full penetration welds in the pressure boundary are prepared with a smooth surface transition between weld metal and parent metal for radiographic inspection.

Support feet are cast integral with the casing to eliminate a weld region.

The design enables disassembly and removal of the pump internals for usual access to the internal surface of the pump casing.

The RCP quality assurance program is given in Table 5.5-2.

5.5.2 Steam Generators

5.5.2.1 Design Basis

Steam generator design data is given in Table 5.5-3b. The design sustains transient conditions that are given in Section 5.2.1. Although the required secondary side ASME classification is Class II, the design philosophy was to use Class I requirements for pressure retaining parts of the steam generator. Assurance of adequate fracture toughness of pressure boundary materials is, therefore, as described in Section 5.2.4 and complies with Article NB-2300 of Section III of the ASME Code. Estimates of radioactivity levels anticipated in the secondary side of the steam generators during normal operation, and the bases for the estimates are given in Chapter 11. Rupture of a steam generator tube is discussed in Chapter 15.

The internal moisture separation equipment is designed to ensure that moisture carryover does not exceed 0.25% by weight under the following conditions:

(1) Steady state operation up to 100% of full load steam flow, with boiling water at the upper limit of the normal operating level.

(2) Loading or unloading at a rate of five percent of full power steam flow per minute in the range from 15% to 100% of full load steam flow.

(3) A step load change of 10% of full power in the range from 15% to 100% full load steam flow.

(4) Load rejection with steam dump.

The steam generator tubesheet complex meets the stress limitations and fatigue criteria specified in the ASME Code Section III. Materials requirements of the steam generator are given in Section 5.2. Code requirements for the steam generator are given in Section 3.2.

The water chemistry in the reactor side is selected to provide the necessary boron content for reactivity control and to minimize corrosion of reactor coolant system surfaces. The water chemistry of the steam side and its effectiveness in corrosion control is discussed in Chapter 10.

5.5.2.2 Design Description

The steam generator shown for Unit 2 in Figure 5.5-3b is a vertical shell and U-tube evaporator with integral moisture separating equipment. The reactor coolant flows through the inverted U-tubes, entering and leaving through the nozzles located in the hemispherical bottom head of the steam generator. The head is divided into inlet and outlet chambers by a vertical partition plate extending from the head to the tubesheet. Manways are provided for access to both sides of the divided head. Steam is generated on the shell side and flows upward through the moisture separators to the outlet nozzle at the top of the vessel.

Materials of construction for the Unit 2 steam generator are noted in Table 5.2-8. Materials are selected and fabricated in accordance with the requirements of the ASME Code Section III. The proposed designs utilizing these materials are analyzed as described in Section 5.2.1. The heat transfer tubes and the divider plate are Inconel and the interior surfaces of the reactor coolant channel heads and nozzles are clad with austenitic stainless steel. The primary side of the tubesheet is weld clad with Inconel. The tubes are roller expanded for the full depth of the tubesheet after the ends are seal welded to the tubesheet cladding. The tube entry is size rolled.

Feedwater flows directly into a preheater section and is heated almost to saturation temperature before entering the boiler section. Subsequently, water-steam mixture flows upward through the tube bundle and into the steam drum section. A set of centrifugal moisture separators, located above the tube bundle, removes most of the entrained water from the steam. Steam dryers are employed to increase the steam quality to a minimum of 99.75% (0.25% moisture by design). The moisture separators recirculate flow through the annulus formed by the shell and tube bundle wrapper. The returning separated water also flows through the space under the preheater section which is provided to separate the tubesheet from the colder feedwater.

The steam drum has two bolted and gasketed manway openings for inspection and maintenance of the dryers, which can be disassembled and removed through the opening. The steam drum also has seven bolted and gasketed access openings for inspection and maintenance of the top of tubesheet region (sludge lancing) and upper support plate area.

5.5.2.3 Design Evaluation

5.5.2.3.1 Forced Convection

The limiting case for heat transfer capability is the "Nominal 100% Design" case. The steam generator effective heat transfer coefficient is based on the coolant conditions of temperature and flow for this case. The best estimate for the heat transfer coefficient applied in steam generator design calculations and plant parameter selection is 1301

BTU/hr-ft^2-°F. This coefficient is approximately 5 to 10% less than the heat transfer performance experienced at a number of operating plants. The coefficient incorporates a specified fouling factor resistance of 0.00005 hr-ft^2-°F/BTU, which is the value selected to account for the differences in the measured and calculated heat transfer performance as well as provide the margin indicated above. Although margin for tube fouling is available, operating experience has not indicated that steam generator performance decreases over a long term period. Adequate tube area is selected to ensure that the full design heat removal rate is achieved.

5.5.2.3.2 Natural Circulation Flow

The steam generators which provide a heat sink are at a higher elevation than the reactor core which is the heat source. Thus natural circulation is assured for the removal of decay heat.

The loss of forced circulation constitutes an emergency plant condition and, under this condition, the plant protection systems will automatically trip the reactor and the plant will be placed in the hot standby operational mode under natural circulation conditions. The plant is designed to be maintained in this condition until forced recirculation is restored and normal plant operations can be resumed. Natural circulation of the reactor coolant is provided with the reactor core as the heat source and the steam generators as the heat sink. Steam release to maintain the reactor at hot standby is accomplished via the main steam power-operated atmospheric relief valves, or the safety valves, if needed (safety grade source) or the preferred flow path through the steam dump valves.

In order to comply with NRC Branch Technical Position (BTP) RSB 5-1,[2] WBN was permitted to satisfy the functional requirements through a comparison of test results of previously tested plants of a similar design along with a supporting/hydraulic analysis of a plant specific cold shutdown scenario.[3][4] This natural circulation cooldown program satisfies the requirement of BTP RSP 5-1 for Watts Bar through a comparison and evaluation of the results from the Diablo Canyon Natural Circulation/Boron Mixing/Cooldown test.[5] The program includes a qualitative comparison and evaluation of the design features and applicability of the Diablo Canyon Unit 1 test results to Watts Bar, which has then been used to develop the cold shutdown scenario that addresses the requirements and assumptions in RSB 5-1. The program also performed a computer simulation of the thermal/hydraulic behavior during the Watts Bar natural circulation cooldown scenario, using the TREAT code. This code analysis evaluates and justifies the specific Watts Bar design cold shutdown capabilities under the requirements of RSB 5-1.

The capabilities of the Watts Bar systems required to support compliance with BTP RSB 5-1, with all required documentation defining the analysis, based on the cooldown tests performed at Diablo Canyon, have been provided by TVA to the NRC.[6] The methods used and the conclusions drawn were found acceptable.[7]

5.5.2.3.3 Tube and Tubesheet Stress Analyses

Tube and tubesheet stress analyses of the steam generator, which are discussed in Section 5.2, confirm that the steam generator tubesheet will withstand the loading caused by loss of reactor coolant.

5.5.2.3.4 Corrosion

No significant general corrosion of the Inconel tubing is expected during the lifetime of the unit. Corrosion tests show a "worst case" rate of 15.0 mg/dm^2 in the 2000 hour test under simulated reactor coolant chemistry conditions. Conversion of this rate to a 40 year plant life gives a corrosion loss of 0.083 mils, which is insignificant compared to the nominal tube wall thickness of 0.043 inches.

Comparable tests with Inconel-600 exposed to simulated steam generator water chemistry have shown equally low general corrosion rates. Testing to investigate the susceptibility of heat exchanger construction materials to stress corrosion in caustic and chloride aqueous solutions has indicated that Inconel-600 has excellent resistance to general and pitting type corrosion in severe operating water conditions, hence its selection for use in the steam generator.

5.5.2.3.5 Compatibility of Steam Generator Tubing with Primary and Secondary Coolant

As discussed in Section 5.5.2.3.4, initial laboratory tests showed the general corrosion rate of Inconel-600 when subjected to both primary and secondary coolant conditions to be insignificant when compared to the nominal tube wall thickness. Many reactor years of successful operation have shown the same low general corrosion rates in operating steam generators.

The plant was originally designed for phosphate treatment of the steam generators. Operating experience, however, revealed areas of localized corrosion where the corrosion rates were significantly greater than the low general corrosion rates. In August 1974, as a result of this operating experience, Westinghouse recommended the use of All Volatile Treatment (AVT) program instead of phosphate chemistry.

The AVT control program minimizes the possibility for recurrence of the tube wall thinning phenomenon. Chemical species, other than those added for AVT control, are considered impurities and concentrations are controlled to minimize corrosion rates. (An exception is the application of boric acid for the special treatment of steam generators). This reduces the potential for the formation of highly concentrated caustic solutions in low flow zones. By restriction of the total alkalinity in the steam generator and prohibition of extended operation with free alkalinity, the AVT program prevents the recurrence of intergranular corrosion in localized areas due to excessive levels of caustic.

Laboratory testing has shown that the Inconel-600 tubing is compatible with the AVT environment. Isothermal corrosion testing in high purity water has shown that non-pickled Inconel-600 in commercially normal microstructures at normal engineering stresses does not suffer intergranular stress corrosion cracking in extended exposure

to high temperature water. This result is applicable to commercial structures which have final finishing such as grinding and bright anneal after pickling. These tests also showed that no thinning type of corrosion occurred. A series of autoclave tests in simulated secondary water with planned excursions have shown no evidence of thinning or other corrosion after 1938 days of testing. A series of capsule tests with high temperature pure water, with and without a synthetic sludge added, have shown no evidence of thinning or other corrosion after up to 12,500 hours. Model boiler tests conducted by Westinghouse have shown quite favorable results for AVT. AVT chemistry control has been employed in plant operations successfully for considerable periods.

Successful operation with AVT chemistry requires minimization of water soluble contaminants entering the secondary system. This requires stringent control of makeup water quality, condenser or other cooling water inleakage, air ingress, chemicals used for process steam conditioning or resin regeneration, and those solids which can accidentally enter the system and thermally decompose to yield ionic by-products. This strict prevention of impurity ingress is necessitated by the physical chemistry of the weak base, ammonium hydroxide, used for pH conditioning. Thus, ammonium hydroxide provides little capability to neutralize any strongly acidic species which might be present in the bulk water when the steam generator is at normal operating or no-load temperatures. Recent industry experience indicates that sodium-chloride molar ratio control should also be implemented to adequately control crevice chemistry conditions, especially if species levels exist above thresholds.

Among the plants with Inconel tubes which have operated successfully with AVT are Hanford N-Reactor and Maine-Yankee. The Hanford N-Reactor has operated with AVT since 1964. There have been no tube leaks and annual eddy current inspections have revealed no defects. Maine-Yankee, which has operated with AVT since 1972, revealed no tube leaks in a July 1974 inspection.

A comprehensive program of steam generator inspections, including the requirements of Regulatory Guide 1.83, ensures detection and correction of any unanticipated degradation that might occur in the steam generator tubing.

Primary water stress corrosion cracking (PWSCC) of mill annealed Inconel 600 tubing has been identified as having a potentially significant impact on plant availability. The conditions necessary for this type of cracking are present in two locations in the steam generators. In the narrow radius bends in the row 1 and 2 tubes, the residual stresses from tube bending may be high enough to lead to PWSCC. In the area where the tube is roller-expanded into the tubesheet, the residual stresses from rolling can lead to PWSCC.

To provide additional margin against PWSCC, qualified procedures were performed for reduction of residual tensile stresses at or near the inner surface of the tube. The row 1 and 2 U-bends, including both tangent points, have had a thermal stress relief cycle applied by use of a resistance heater. The roller-expanded portion of the tubes within the tubesheet and at the transition between the expanded and non-expanded portion at the top of the tubesheet have had a mechanical stress modification by the

application of the process known as rotopeening (hot leg) and shotpeening (cold leg). The identical rotopeening (hot leg) process has been applied at the Shearon Harris plant, which utilizes Model D4 steam generators. The tube expansion processes used for Watts Bar and Shearon Harris are identical. Like Watts Bar, the rotopeening process performed at Harris was implemented prior to operation.

5.5.2.3.6 Flow Induced Vibration

In the design of Westinghouse steam generators, consideration has been given to the possibility of vibratory failure of tubes due to mechanical or flow induced excitation. This consideration includes detailed analysis of the tube supporting system as well as an extensive research program with tube vibration model tests at the Westinghouse Research and Development Laboratories.

The major cause of tube vibratory failure in heat exchanger components is that due to hydrodynamic excitation by the fluid outside the tube. Consideration is given by Westinghouse to four regions where the possibility of flow induced vibration may exist:

(1) At the entrance of downcomer feed to the tube bundle (cross flow)

(2) Along the straight sections of the tube (parallel flow)

(3) In the curved tube section of the U-bend (cross flow)

(4) At the main feedwater entrance to the preheater portion of the tube bundle (cross flow)

Note that two types of flow, cross flow and parallel flow, exist. For the case of parallel flow, analysis is done to determine the vibratory deflections. Analysis of the steam generator tubes indicates the flow velocities to be sufficiently below that required for damaging fatigue or impacting vibratory amplitudes. The support system, therefore, is deemed adequate to preclude parallel flow excitation. For the case of cross flow excitation, it is noted in the literature that several techniques for the analysis of the tube vibration exist. The design problem is to ascertain that the tube natural frequency is well above the vortex shedding frequency. In order to avoid this resonant vibration, adequate tube supports are provided.

Flow induced vibration was found to exist in the fourth region above in similar steam generators at other operating plants in October 1981. The resolution of this problem for WBN is provided in the last paragraph of this section.

Since the problem of cross flow induced vibration was of major concern in the design of shell and tube heat exchangers, Westinghouse has given consideration to the experimental evaluation of the behavior of tube arrays under cross flow. While consideration was given to instrumentation of actual units in service, the hostile environment would limit the amount and quality of information obtained therefrom. As a result, it was deemed prudent to undertake a research program which would allow the study of fluid elastic vibration behavior of tubes in arrays. A wind tunnel was built specifically for this purpose and Westinghouse has invested approximately 3 years of

research into the study of this problem. The research facilities for the tube vibration study have expanded with the construction of a water tunnel facility.

The results of this research confirm the vortex shedding mechanism. More significant, however, is the evaluation of a fluid elastic mechanism not associated with vortex shedding. This is not commonly understood from the literature and could be a source of vibration failure. Westinghouse steam generators are evaluated on this basis in addition to the aforementioned techniques and found adequately designed. Testing has also been conducted using specific parameters of the steam generator and the results show the support system to be adequate.

Summarizing the results of analysis and tests of steam generator tubes for flow induced vibration, it can be stated that a check of support adequacy has been made using all published techniques believed appropriate to heat exchanger tube support design. In addition, the tube support system is consistent with accepted standards of heat exchanger design utilized throughout the industry (spacing, clearance, etc.). Furthermore, the design techniques are supplemented with a continuing research and development program to understand the complex mechanism of concern.

The effects of vibration, erosion and cavitation have been given consideration. Analysis of loss of coolant accident blowdown forces on as fabricated U-tubes has shown that the maximum bending load elastic stress intensity is well below the faulted condition limit. Estimates of tube degradation from erosion/corrosion mechanisms indicate that approximately 2-1/2 mils wall thinning (2 mils primary, 1/2 mil secondary side) will result over the 40 year lifetime. As a minimum, at least 2-1/2 mils wall thinning can be tolerated without exceeding the allowable stress limits. This thinning is 1/4 of the maximum tube wall thinning which can be permitted on the basis of the code allowable stress limits for faulted conditions. Vibration effects are eliminated during normal operation by the supporting system. Under loss-of-coolant accident conditions, vibration is of a short duration and there is no endurance problem.

Studies of the anticipated results of minimum dimensions are not required technology as part of the construction and evaluation standards.

Further consideration is given to the possibility of mechanically excited vibration, in which resonance of external forces with tube natural frequencies must be avoided. It is believed that the transmissibility of external forces either through the structure or from fluid within the tubes is negligible and should cause little concern.

Operating experience on Westinghouse Model D2/D3 pre-heat steam generators from October 1981 to early 1982 provided indication that there was severe flow induced vibrational problems associated with the preheat section of these steam generators which resulted in accelerated tube wear and leaks. Westinghouse responded by establishing a task force to resolve this problem. Several utilities, with Westinghouse's and the NRC's concurrence, established a design review panel to examine all aspects of the final Westinghouse design for this preheater modification. As a result of this program, Westinghouse design changes to the steam generator inlet were accepted by the utilities and the NRC and incorporated into the Watts Bar steam generators prior

to the plant startup. Additional details of these design changes and the above programs are described in NUREG-0966, ”Safety Evaluation Report Related to the Model D2/D3 Steam Generator Design Modifications.”

5.5.2.4 Tests and Inspections

The initial steam generator quality assurance program is given in Table 5.5-4b.

Radiographic inspection and acceptance standards are in accordance with the requirements of Section III of the ASME Code.

Liquid penetrant inspection was performed on weld deposited tubesheet cladding, channel head cladding, tube to tubesheet weldments, and weld deposit cladding.

Liquid penetrant inspection and acceptance standards are in accordance with the requirements of Section III of the ASME Code.

Magnetic particle inspection was performed on the tubesheet forging, channel head casting, nozzle forgings, and the following is weldments:

(1) Nozzle to shell

(2) Support brackets

(3) Instrument connections (primary and secondary)

(4) Temporary attachments after removal

(5) Accessible pressure containing welds after hydrostatic test.

Magnetic particle inspection and acceptance standards are in accordance with requirements of Section III of the ASME Code.

An ultrasonic test was performed on the tubesheet forging, tubesheet cladding, secondary shell and heat plate and nozzle forgings.

The heat transfer tubing was subjected to eddy current test.

Hydrostatic tests are performed in accordance with Section III of the ASME Code.

In addition, the heat transfer tubes were subjected to a hydrostatic test pressure, prior to installation into the vessel, which is not less than 1.25 times the primary side design pressure, as required by Section III of the ASME Code.

Manways are provided for access to both the primary and secondary sides.

Inservice inspection of steam generator tubes is done in accordance with Technical Specifications. The extent of tube testing planned will depend on tube performance to date and the results of tube sample testing.

5.5.3 Reactor Coolant Piping

5.5.3.1 Design Bases

The RCS piping is designed and fabricated to accommodate the system pressures and temperatures attained under all expected modes of plant operation or anticipated system interactions. Stresses are maintained within the limits of Section III of the ASME Nuclear Power Plant Components Code. Code and material requirements are provided in Section 5.2.

Materials of construction are specified to minimize corrosion/erosion and ensure compatibility with the operating environment.

The piping in the RCS is Safety Class 1 and is designed and fabricated in accordance with ASME Section III, Class 1 requirements.

Stainless steel pipe conforms to ANSI B36.19 for sizes 1/2 inch through 12 inches and wall thickness Schedules 40S through 80S. Stainless steel pipe outside of the scope of ANSI B36.19 conforms to ANSI B36.10.

The minimum wall thicknesses of the loop pipe and fittings are not less than that calculated using the ASME III Class 1 formula of Paragraph NB-3641.1 (3), with an allowable stress value of 17,550 psi. The pipe wall thickness for the pressurizer surge line is Schedule 160. The minimum pipe bend radius is 5 nominal pipe diameters; ovalness does not exceed 6%.

Butt welds, branch connection nozzle welds, and boss welds are of a full-penetration design.

Processing and minimization of sensitization are discussed in Sections 5.2.3 and 5.2.5.

Flanges conform to ANSI B16.5.

Socket weld fittings and socket joints conform to ANSI B16.11.

Inservice inspection is discussed in Section 5.2.8.

5.5.3.2 Design Description

Principal design data for the reactor coolant piping are given in Table 5.5-5.

Pipe and fittings are cast, seamless without longitudinal welds and electroslag welds, and comply with the requirements of the ASME Code, Section II, Parts A and C, Section III, and Section IX.

The RCS piping is specified in the smallest sizes consistent with system requirements. This design philosophy results in the reactor inlet and outlet piping diameters given in Table 5.5-5. The line between the steam generator and the pump suction is larger to reduce pressure drop and improve flow conditions to the pump suction.

The reactor coolant piping and fittings which make up the loops are austenitic stainless steel. There has been no electroslag welding on these components. All smaller piping which comprise part of the RCS such as the pressurizer surge line, spray and relief line, loop drains and connecting lines to other systems are also austenitic stainless steel. The nitrogen supply line for the pressurizer relief tank is carbon steel. Joints and connections are welded, except for the pressurizer safety valves, where flanged joints are used. Thermal sleeves are installed in the system where high thermal stresses could develop due to rapid changes in fluid temperature during normal operational transients. These points include:

(1) Pressurizer end of the pressurizer surge line.

(2) Pressurizer spray line connection at the pressurizer.

Thermal sleeves are not provided for the remaining safety injection connections of the ECCS since these connections are used for recirculation only.

Piping connections from auxiliary systems are made above the horizontal centerline of the reactor coolant piping, with the exception of:

(1) Residual heat removal pump suction lines, which are 45° down from the horizontal centerline. This enables the water level in the RCS to be lowered in the reactor coolant pipe while continuing to operate the residual heat removal system, should this be required for maintenance.

(2) Loop drain lines and the connection for temporary level measurement of water in the RCS during refueling and maintenance operation.

(3) The differential pressure taps for flow measurement, which are downstream of the steam generators on the first 90° elbow.

(4) The pressurizer surge line, which is attached at the horizontal centerline.

(5) The safety injection connections to the hot leg, for which inservice inspection requirements and space limitations dictate location on the horizontal centerline.

Penetrations into the coolant flow path are limited to the following:

(1) The spray line inlet connections extend into the cold leg piping in the form of a scoop so that the velocity head of the reactor coolant loop flow adds to the spray driving force.

(2) The reactor coolant sample system taps protrude into the main stream to obtain a representative sample of the reactor coolant.

(3) The narrow-range RCS temperature sensors (RTDs) are mounted in thermowells that protrude into the hot legs and cold legs.

(4) The wide-range RCS temperature sensors (RTDs) are mounted in thermowells that protrude into the hot legs and cold legs.

The RCS piping includes those sections of piping interconnecting the reactor vessel, steam generator, and RCP. It also includes the following:

(1) Charging line and alternate charging line from the system isolation valve up to the branch connections on the reactor coolant loop.

(2) Letdown line and excess letdown line from the branch connections on the reactor coolant loop to the system isolation valve.

(3) Pressurizer spray lines from the reactor coolant cold legs to the spray nozzle on the pressurizer vessel.

(4) Residual heat removal lines to or from the reactor coolant loops up to the designated check valve or isolation valve.

(5) Safety injection lines from the designated check valve to the reactor coolant loops.

(6) Accumulator lines from the designated check valve to the reactor coolant loops.

(7) Loop fill, loop drain, sample, and instrument lines to or from the designated isolation valve to or from the reactor coolant loops. Lines with a 3/8 inch flow restricting orifice qualified as Safety Class 2; in the event of a line break in one of these Safety Class 2 lines, the normal makeup system is capable of providing makeup flow while maintaining pressurizer water level.

(8) Pressurizer surge line from one reactor coolant loop hot leg to the pressurizer vessel inlet nozzle.

(9) Pressurizer spray scoop, sample connection with scoop, RTD thermowell installation boss, and the thermowell itself.

(10) All branch connection nozzles attached to reactor coolant loops.

(11) Pressure relief lines from nozzles on top of the pressurizer vessel up to and through the power-operated pressurizer relief valves and pressurizer safety valves.

(12) Seal injection water and labyrinth differential pressure lines to or from the reactor coolant pump inside reactor containment.

(13) Auxiliary spray line from the isolation valve to the pressurizer spray line header.

(14) Sample lines from pressurizer to the isolation valve.

Details of the materials of construction and codes used in the fabrication of reactor coolant piping and fittings are discussed in Section 5.2.

5.5.3.3 Design Evaluation

Piping load and stress evaluation for normal operating loads, seismic loads, blowdown loads, and combined normal, blowdown and seismic loads is discussed in Section 5.2.1.

5.5.3.3.1 Material Corrosion/Erosion Evaluation

The water chemistry is selected to minimize corrosion. A periodic analysis of the coolant chemical composition is performed to verify that the reactor coolant quality meets the specifications.

The design and construction are in compliance with 10CFR50 Appendix A GDC32 (See Section 3.1.2.4). Pursuant to this, all pressure containing welds out to the second valve that delineates the RCS boundary are available for examination with removable insulation.

Components constructed with stainless steel will operate satisfactorily under normal plant chemistry conditions in pressurized water reactor systems, because chlorides, fluorides, and particularly oxygen, are controlled to very low levels (see Section 5.2.3.4).

Periodic analysis of the coolant chemical composition is performed to monitor the adherence of the system to desired reactor coolant water quality listed in Table 5.2-10. Maintenance of the water quality to minimize corrosion is accomplished using the chemical and volume control system and sampling system which are described in Sections 9.3.4 and 9.3.2, respectively.

Pressurizer and reactor vessel nozzle dissimilar metal (i.e., Inconel Alloy 82/182) are susceptible to stress corrosion cracking. Under sustained tensile stresses, dissimilar metal (DM) nozzle buttering and nozzle to safe end butt welds can develop cracks through corrosive action of the primary water. However, stress corrosion cracking does not occur in materials that are in a compressive state of stress. Therefore, TVA has committed to industry guidance document, Nuclear Energy Institute, (NEI) 03-08, "Guideline for the Management of Materials Issues," to address these materials issues. NEI 03-08 endorses MRP-139, Revision 1 , "Material Reliability Program: Primary System Piping Butt Weld Inspection and Evaluation Guideline."

Under this program, TVA has used Mechanical Stress Improvement Process (MSIP®), a proprietary mechanical process, which mitigates and prevents the initiation of stress corrosion cracking at dissimilar metal (DM) weld locations in components and piping. The process works by generating beneficial compressive residual stress patterns from the pipe inside surface to about halfway through the wall thickness in both axial and circumferential directions. The resulting compressive residual stresses prevent crack initiation and arrest existing shallow cracks. The process is accomplished by a one-time application of compressive force and mechanically controlled permanent radial

contraction to the outside surface of the nozzle safe end and/or piping. A split clamp ring is placed around the nozzle safe end and/or the attached pipe or elbow at a specified distance from the DM butt weld centerline. The gaps between the clamp ring halves are shimmed and then the clamp ring is contracted by box presses (i.e., framed hydraulic cylinders) to circumferentially compress/yield the piping within the specified range. The MSIP® box presses and clamp ring are then removed from the piping.

MSIP® was applied to prevent stress corrosion cracking of the nozzle buttering and nozzle to safe-end butt welds on the six pressurizer nozzles, the four reactor vessel cold leg nozzles and the four reactor vessel hot leg nozzle locations. The Unit 2 pressurizer spray, safety and relief nozzles and the Unit 2 pressurizer surge nozzle had the MSIP® clamp ring placed directly on the nozzle safe ends. For the Unit 2 reactor vessel nozzles the MSIP® clamp rings were placed on the hot leg pipes and the cold leg elbows.

MSIP® was applied as a special process under ASME Section III for Unit 2. QA requirements for "Control of Processes" are defined in ASME NQA-1, "Quality Assurance Requirements for Nuclear Facility Applications." ASME NQA-1 is invoked by both ASME III and ASME XI. The ASME NQA-1 requirements were met by the Westinghouse and Unit 2 certificate holder PCI Energy Services NPT/NA ASME QA Programs.

Addenda to the pressurizer and reactor vessel component and piping stress reports of record were prepared by Westinghouse and TVA to present results of the re-analyses and reconciliations performed to evaluate the effects of MSIP® and to demonstrate that the stress reports of record remain valid. These addenda confirm that the deformed geometries of the component nozzles and piping including elongation do not have any adverse impact on the existing ASME Section III stress qualifications of record.

5.5.3.3.2 Sensitized Stainless Steel

Sensitized stainless steel is discussed in Sections 5.2.3 and 5.2.5.

5.5.3.3.3 Contaminant Control

Contamination of stainless steel and Inconel by copper, low melting temperature alloys, mercury and lead is prohibited. Any other material which could come in contact with RCS piping, such as thread lubricants, are controlled.

Special consideration will be given to light bulbs which contain hazardous materials, such as mercury, to assure that the hazardous material is contained witin their envelope and/or fixture.

Prior to application of thermal insulation, the austenitic stainless steel surfaces are cleaned and analyzed to a halogen limit of $\leq$ 0.08 mg Cl/dm^2 and $\leq$ 0.08 mg F/dm^2.

5.5.3.4 Tests and Inspections

The RCS piping quality assurance program is given in Table 5.5-6.

Volumetric examination is performed throughout 100% of the wall volume of each pipe and fitting in accordance with the applicable requirements of Section III of the ASME Code for pipe 27-1/2 inches and larger. Unacceptable defects are eliminated in accordance with the requirements of the same section of the code.

A liquid penetrant examination is performed on both the entire outside and inside surfaces of each finished fitting in accordance with the criteria of ASME Section III. Acceptance standards are in accordance with the applicable requirements of ASME Section III.

The pressurizer surge line conforms to SA-376 Grade 304, 304N, or 316 with supplementary requirements S2 (transverse tension tests), and S6 (ultrasonic test). The S2 requirement applies to each length of pipe. The S6 requirement, applies to 100% of the piping wall volume.

The end of pipe sections, branch ends and fittings are machined back to provide a smooth weld transition adjacent to the weld path. Butt welds are ground smooth to permit inservice inspection in accordance with ASME Section XI and preservice inspection in accordance with ASME Section III. There are no pipe-to-pipe welds.

5.5.4 Steam Outlet Flow Restrictor (Steam Generator)

5.5.4.1 Design Basis

Each steam generator is provided with a flow restrictor having several small diameter venturi-type throats. The flow restrictors are designed to limit steam flow rate consequent to the unlikely event of a steam line rupture, thereby reducing the cooldown rate of the primary system and limiting stresses of internal steam generator components.

The flow restrictor is designed to limit the flow rate from a steam generator in the event of an unisolated main steam line break (addressed in Section 6.2.1.3.10 and Section 15.4) and to provide a portion of the pressure drop used for the main steam flow measurement.

Although it is not considered to be part of the pressure vessel boundary, the restrictor is constructed of material specified in Section III of the ASME Code.

5.5.4.2 Description

The flow restrictor is an assembly of seven smaller nozzles installed within the steam outlet nozzle of the steam generator. The venturi nozzles are Inconel. The flow restrictor is welded into the main steam generator outlet by a circumferential weld to the inside surface of the outlet nozzle.

5.5.4.3 Evaluation

Each flow restrictor has an effective throat area of 1.4 ft^2 and the resultant pressure drop through the restrictors at 100% steam flow is approximately 3.4 psid. The steam

side weld to the outlet nozzle is in compliance with manufacturing and quality control requirements of ASME Code Section III.

5.5.4.4 Tests and Inspections

The restrictors are not a part of the steam system boundary. No tests or inspections of the restrictors are anticipated beyond those performed in the fabricator's shop.

5.5.5 Main Steam Line Isolation System

Since the main steam lines in the Watts Bar nuclear units are not a part of the reactor coolant pressure boundary, as in a BWR, the requirement for a discussion of the isolation of the main steam lines in this section is not applicable. For details of the main steam line isolation, see Section 10.3.

5.5.6 Reactor Vessel Head Vent System

5.5.6.1 Design Basis

The Reactor Vessel Head Vent System (RVHVS) design parameters are listed in Table 5.5-16.

The RVHVS provides a means for venting noncondensible gases or steam from the reactor vessel head which may impair ECCS or natural circulation cooling. The system is orificed to 3/8-inch ID which forms a Safety Class 1 to 2 transition and limits the maximum possible release of hydrogen within 5000 scfm. This configuration will vent approximately 1/2 of the RCS volume of hydrogen at constant operating temperature and pressure in one hour from either of the two vent paths. The RVHVS is in compliance with NUREG-0737 (Section II.B.1) for venting the reactor vessel. See Section 5.5.13 for high point venting of the pressurizer.

5.5.6.2 System Description

The RVHVS is a subsystem of the RCS consisting of two safety-grade redundant venting flow paths as shown on Figure 5.1-1-1. The system is orificed with a 3/8-inch connection to form a safety class transition from 1 to 2 (TVA Class A to TVA Class B piping) and to limit the maximum possible release of hydrogen to within 5000 scfm. This will allow an initial venting period of approximately ten minutes without violating bulk containment hydrogen combustible concentration (considering total containment volume). The system should not be used unless an inadequate water level is determined in the reactor vessel. The system is also used as a safety grade letdown path for natural circulation cooldown.

The active portion of the RVHVS consists of four 1-inch TVA Class, 'B' solenoid-operated valves. Valves FSV-68-394 and FSV-68-395 are open/close isolation valves and are powered by opposite vital power bus trains A and B, respectively. Valves FSV-68-396 and FSV-68-397 are position throttle valves that will enable the operator to regulate the release rate of the noncondensible gases and/or steam as well as minimize the dynamic and thermal stresses on piping outside of the reactor coolant pressure boundary (RCPB). The throttle valves (FSV-68–396 and FSV-68-397) are also powered by opposite vital bus trains B and A, respectively. Each

of the valves is remote manually operated from the main control room (MCR) and are fail closed active valves in accordance with Regulatory Guide 1.48.

The venting operation uses only one of the two available flowpaths at any time. The combination of safety-grade train assignment and valve failure modes will not prevent vessel head venting nor venting isolation with any single active failure. Therefore, the failure of a power supply powering two of the vent valves will not affect the operation of the other valves.

The RVHVS is also provided with a temperature channel to detect isolation valve seat leakage. An RTD is strapped onto the common vent piping located between the solenoid-operated valves (See Figure 5.1-1-1.) with alarm and indication in the MCR.

The RVHVS discharge piping downstream of the throttle valves is TVA Class G piping. The piping converges into a common pipe routed to the pressurizer relief tank (PRT) via the pressurizer relief valve discharge pipe.

5.5.6.2.1 Component Description

The materials used to fabricate RVHVS components are in accordance with the applicable codes requirements. Parts of components in contact with borated water are fabricated or clad with austenitic stainless steel or equivalent corrosion resistant material.

Component codes and classifications are given in Section 3.2 and component parameters are listed in Table 5.5-16.

Valves

Four solenoid-operated valves are installed in the RVHVS. These valves are dual-piloted disc, solenoid-activated valves. The valve consists of a disc and bonnet assembly surrounded by a solenoid assembly and mounted to a stainless steel body. The bonnet assembly consists of a bonnet tube and indicator tube threaded together and seal welded and the fixed core which is swaged into the upper portion of the assembly. The bonnet assembly encloses and guides the moveable core, connecting tube, magnet assembly, and plunger. The solenoid assembly consists of a coil and housing which is potted and sealed.

5.5.6.2.2 System Operation

The RVHVS is designed to provide a means for venting the reactor vessel head in a remotely operable, controlled manner. The system provides additional flexibility to the plant operator during normal and accident mitigation operation. Air venting during plant startup, system venting during plant shutdown, or postaccident mitigating of nondesign basis events may be achieved with the RVHVS. However, the system will not be utilized during emergency operations until an inadequate water level within the reactor vessel has been determined by the RVLIS. During normal power operations, each of the valves is de-energized and fully closed.

5.5.6.3 Design Evaluation

5.5.6.3.1 System Availability and Reliability

The combination of valve modes and power supply assignments allows the reactor head vent system to meet the single active failure criteria for venting and isolation. The venting operation uses only one of the two available flowpaths at any one time. Therefore, the failure of a power supply powering two of the vent valves will not affect the operation of the other valves. Likewise, a valve failure in one flowpath is addressed by opening the parallel path. If a single valve fails in the open position, the valve in series may be used to terminate the vent flow.

The system design, with two valves in series in each flow path, minimizes the possibility of reactor coolant pressure boundary leakage. The valves are normally closed, deenergized and, therefore, maintain their deenergized position following a loss of power.

5.5.6.3.2 Leakage Provisions

In the event of a valve seat leakage, the RVHVS pipe temperature will increase. This temperature increase will be detected by a RTD strapped onto the common vent system piping located between the solenoid-operated valves (See Figure 5.1-1-1.). The RTD provides signals for MCR board alarm and indication.

Leakage from the RVHVS valve's seat is piped to the PRT. The PRT is equipped with level, pressure, and temperature instrumentation. For additional information for the PRT and its associated instrumentation, see Sections 5.5.11 and 5.2.7.1, respectively.

The RVHVS functions as a part of the RCPB piping. Therefore, any leakage via RVHVS piping is detected by the RCPB leakage detection system (see Section 5.2.7).

5.5.6.3.3 Pipe Rupture Provisions

Each flow path in the RVHVS is orificed to 3/8-inch to provide an ANS safety class transition from Class 1 to 2. A break downstream of the orifice or an inadvertently open flow path is flow limited to within the capacity of one centrifugal charging pump. The 3/8-inch orifice also limits the flow of hydrogen from the RCS to allow a reasonable venting period without exceeding bulk containment combustible limits.

5.5.6.3.4 Radiological Considerations

The highest radiation levels the RVHVS is exposed to are those resulting from a LOCA. The RVHVS may be used to vent noncondensible gases and/or vapor from the reactor vessel head which may impair ECCS or natural circulation cooling. The system is environmentally qualified to be operable following a design basis event.

The RVHVS is located inside the containment and is subject to the high levels of radioactivity in the containment postaccident environment. The operation of the RVHVS does not involve a radiation hazard for the operators since the system is controlled remotely from the MCR.

5.5.7 Residual Heat Removal System

The Residual Heat Removal System (RHRS) transfers heat from the RCS to the Component Cooling System (CCS) to reduce the temperature of the reactor coolant to the cold shutdown temperature at a controlled rate during the second part of normal plant cooldown and maintains this temperature until the plant is started up again.

Parts of the RHRS also serve as parts of the Emergency Core Cooling System (ECCS) during the injection and recirculation phases of a LOCA (see Section 6.3).

The RHRS is also used to transfer refueling water between the refueling cavity and the refueling water storage tank at the beginning and end of the refueling operations.

5.5.7.1 Design Bases

RHRS design parameters are listed in Table 5.5-7.

The RHRS is designed to remove heat from the core and reduce the temperature of the RCS during the second phase of plant cooldown. Hydrazine (N_2H_4) may be employed as an oxygen scavenging agent before or during cooldown prior to placing RCS on RHR. During the first phase of cooldown, the temperature of the RCS is reduced by transferring heat from the RCS to the steam and power conversion system through the steam generators.

The RHRS is designed to be placed in operation approximately four hours after reactor shutdown when the temperature and pressure of the RCS are less than 350°F and 370 psig, respectively.

UNIT 1 ONLY - Assuming that two heat exchangers and two pumps are in service and that each heat exchanger is supplied with component cooling water at design flow and temperature, the RHRS is capable of reducing the temperature of the reactor coolant from 350°F to 140°F within 19 hours, with an ERCW temperature of 88°F.

UNIT 2 ONLY - Assuming that two heat exchangers and two pumps are in service and that each heat exchanger is supplied with component cooling water at design flow and temperature, the RHRS is designed to reduce the temperature of the reactor coolant from 350°F to 140°F within 16 hours.

The heat load handled by the RHRS during the cooldown transient includes residual and decay heat from the core and RCP heat.

UNIT 1 ONLY - The original design heat load was based on the decay heat fraction that exists at 20 hours following reactor shutdown from an extended run at full power.

UNIT 2 ONLY - The design heat load is based on the decay heat fraction that exists at 20 hours following reactor shutdown from an extended run at full power.

5.5.7.2 System Description

The RHRS, as shown in Figure 5.5-4-1, consists of two residual heat exchangers, two residual heat removal pumps, and the associated piping, valves, and instrumentation necessary for operational control. The inlet line to the RHRS is connected to the hot leg of one reactor coolant loop, while the return lines are connected to the cold legs of each of the reactor coolant loops. Those return lines are also the ECCS low head injection lines (see Figure 6.3-1 Sheet 1).

The RHRS suction line is isolated from the RCS by four motor-operated valves in a series/parallel combination, header leak test valves, and a relief valve, all located inside the containment. (See Figure 5.5-4-1). Each discharge line is isolated from the RCS by two check valves located inside the containment and by a normally open motor-operated valve located outside the containment. (The check valves and the motor-operated valve on each discharge line are not part of the RHRS; these valves are shown as part of the ECCS, see Figure 6.3-1 Sheet 1).

During RHRS operation, reactor coolant flows from the RCS to the residual heat removal pumps, through the tube side of the residual heat exchangers, and back to the RCS. The heat is transferred to the component cooling water circulating through the shell side of the residual heat exchangers.

Coincident with operation of the RHRS, a portion of the reactor coolant flow may be diverted from downstream of the residual heat exchangers to the Chemical and Volume Control System (CVCS) low pressure letdown line for cleanup and/or pressure control. By regulating let down line pressure and charging flow, the RCS pressure may be controlled. Pressure regulation is necessary to maintain the pressure range dictated by the fracture prevention criteria requirements of the reactor vessel (See Section 3.1.2.4) and by the number 1 seal differential pressure and net positive suction head requirements of the RCPs.

The RCS cooldown rate is manually controlled by regulating the reactor coolant flow through the tube side of the residual heat exchangers. A common line containing a flow control valve bypasses both residual heat exchangers and is used together with each RHR heat exchanger discharge valve to control return flow to the RCS. Instrumentation is provided to monitor system pressure, temperature and total flow.

The RHRS is also used for filling the refueling cavity before movement of fuel. After refueling operations, water is pumped back to the refueling water storage tank until the water level is brought down to the flange of the reactor vessel. The remainder of the water is removed via a drain connection at the bottom of the refueling canal.

When the RHRS is in operation, the water chemistry is the same as that of the reactor coolant. Provision is made for the Process Sampling System to extract samples from the flow of reactor coolant downstream of the residual heat exchangers. A local sampling point is also provided on each residual heat removal train between the pump and heat exchanger.

The RHRS functions in conjunction with the high head portion of the ECCS to provide injection of borated water from the refueling water storage tank into the RCS cold legs during the injection phase following a LOCA.

In its capacity as the low head portion of the ECCS, the RHRS provides long term recirculation capability for core cooling following the injection phase of the LOCA. This function is accomplished by aligning the RHRS to take fluid from the containment sump, cool it by circulation through the residual heat exchangers, and supply it to the core directly as well as via the centrifugal charging pumps in the CVCS and the safety injection pumps in the safety injection system (SIS).

The use of the RHRS as part of the ECCS is discussed in Section 6.3.

5.5.7.2.1 Component Description

The materials used to fabricate RHRS components are in accordance with the applicable code requirements. Parts of the components in contact with borated water are fabricated or clad with austenitic stainless steel or equivalent corrosion resistant material.

Component codes and classifications are given in Section 3.2 and component parameters are listed in Table 5.5-8.

Residual Heat Removal Pumps

Two pumps are installed in the RHRS. The pumps are sized to deliver reactor coolant flow through the residual heat exchangers to meet the plant cooldown requirements. The use of two pumps assures that cooling capacity is only partially lost should one pump become inoperative.

The residual heat removal pumps are protected from overheating and low flow by miniflow by-pass lines that assure flow to the pump suction. A valve located in each miniflow line is controlled by a signal from a flow switch located in each pump discharge header. The control valves open when the residual heat removal pumps discharge flow is less than a low setpoint and close when the flow exceeds a high setpoint.

To prevent possible pump-to-pump interaction while the RHR pumps are operating on mini-flow recirculation following a safety injection signal, check valves are located downstream of the take-off for the RHR pump mini-flow line (downstream of the RHR heat exchangers). By locating the check valves downstream of each RHR pump's miniflow inlet, backpressure from the stronger pump is prevented from deadheading the weaker pump during miniflow operation.

A pressure sensor in each pump discharge header provides an MCR indication. Also, an MCR annunciator is actuated if the pump discharge pressure exceeds the high pressure setpoint.

The two pumps are vertical, centrifugal units with mechanical seals on the shafts. The pump surfaces in contact with reactor coolant are austenitic stainless steel or equivalent corrosion resistant material.

Residual Heat Exchangers

Two residual heat exchangers are installed in the system. The heat exchanger design is based on heat load and temperature differences between reactor coolant and component cooling water postulated to exist twenty hours after reactor shutdown.

The installation of two heat exchangers in separate and independent residual heat removal trains assures that the heat removal capacity of the system is only partially lost if one train becomes inoperative.

The residual heat exchangers are of the shell and U-tube type. Reactor coolant circulates through the tubes, while component cooling water circulates through the shell. The tubes are welded to the tube sheet to prevent leakage of reactor coolant.

Residual Heat Removal System Valves

Valves that perform a modulating function are equipped with two sets of packings and an intermediate leakoff connection that discharges to the drain header.

Manual and motor operated valves have backseats to facilitate repacking and to limit stem leakage when the valves are open. Leakage connections are provided where required by valve size and fluid conditions.

Some valves may have their leakoff line connections plugged after the packing has been upgraded with graphite packing rings. This packing configuration reduces stem leakage to essentially zero.

5.5.7.2.2 System Operation

Reactor Startup

Generally, while at a cold shutdown condition, residual heat from the reactor core is being removed by the RHRS. The number of pumps and heat exchangers in service depends upon the residual heat removal load at the time. At the beginning of the plant startup, only one RHR pump is normally operating; however, a portion of the discharge is directed to the chemical and volume control system via the letdown line downstream of each RHR exchanger. Thus the RHR is used for maintaining the reactor coolant system temperature, while RCS makeup is handled by the charging system as it is under full power operation. When the RCS has been filled and vented and a bubble formed in the pressurizer, the RCPs can be started, as needed, and the RHR pumps stopped. The RHRS is isolated from the RCS and the two valves which isolate the heat exchanger bypass line are closed.

Power Generation and Hot Standby Operation

During power generation and hot standby operation, the RHRS is not in service but is aligned for operation as part of the ECCS.

Reactor Cooldown

Reactor cooldown is defined as the operation which brings the reactor from no load temperature and pressure to cold conditions.

The initial phase of reactor cooldown is accomplished by transferring heat from the RCS to the steam and power conversion system through the use of the steam generators.

After reactor shutdown, when the reactor coolant temperature and pressure are reduced to less than 350°F and 370 psig, the second phase of cooldown starts with the RHRS being placed in operation.

Initiation of residual heat removal includes a warm-up period during which time reactor coolant flow through the heat exchangers is limited to minimize thermal shock on the heat exchangers. The rate of heat removal is regulated from the plant control room by adjusting the valves downstream of the residual heat exchanger as well as the valve in the heat exchanger bypass line to maintain the desired total return flow.

The cooldown rate is limited by the allowable equipment cooling rates and on the limits set by the operating temperature of the component cooling water. As the reactor coolant temperature decreases, (i.e., heat exchanger differential temperature decreases), the reactor coolant flow through the residual heat exchanger is increased to maintain the cooldown rate.

As shutdown continues, the pressurizer may be filled and the reactor coolant system operated in the solid (filled) water condition. At this stage, pressure control is accomplished by regulating the letdown rate to the chemical and volume control system via the connecting line downstream of the residual heat exchangers. After the reactor coolant pressure has been reduced and the temperature is 140°F or lower, the RCS may be opened for refueling or maintenance.

Reduced Inventory and Mid-Loop Operation [Ref. 8]

RHR cooling capability continues during cold shutdown and refueling conditions. This includes mid-loop operation with the RCS level reduced below the reactor vessel flange and into the mid-loop region. Procedural controls are provided to address loss of decay heat removal when the RCS is at mid-loop or reduced inventory condition to include:

(1) Achieving containment closure within the time at which a core uncovery could result from a loss of RHR coupled with an inability to inititate alternate cooling or addition of water to the RCS inventory.

(2) UNIT 1 ONLY - Maintenance of at least two incore thermocouples when the reactor head is in place with irradiated fuel in the reactor vessel except when connecting thermocouples through the vessel head prior to head removal and after head replacement.

(3) UNIT 2 ONLY- The WINCISE thermocouples are installed from the bottom of the vessel and are always available.

(4) Providing two independent, continuous RCS water level indications.

(5) Ensuring no work will be scheduled which could perturb the RCS or RHR systems, unless increased monitoring and enhanced communication is in place.

(6) Providing two means for adding inventory when the RCS is in a reduced inventory condition.

(7) Verification of adequate RCS hot side ventilation before installing each hot leg nozzle dam and to maintain the vent path(s) open.

Refueling

One or both RHR pumps are utilized during the refueling operation to pump borated water from the refueling water storage tank to the refueling cavity. During this operation, the isolation valve to the refueling water storage tank is opened. The reactor vessel head is lifted and the refueling water will then flow into the reactor vessel through the normal residual return lines and into the refueling cavity (See Section 9.1.4.2.1).

During refueling, the residual heat removal loop is maintained in service with the number of pumps and heat exchangers in operation being determined by RCS heat load.

Following refueling, the residual heat removal pumps are used to drain the refueling cavity down to the reactor vessel flange by pumping water from the reactor coolant system to the refueling water storage tank while the reactor head is lowered into place. This transfer is accomplished by closing the isolation valves on the outlet lines of the residual heat removal loop and opening the manual isolation valve on the return line to the refueling water storage tank. When the reactor head is in place, the normal residual heat removal flow path is re-established.

5.5.7.3 Design Evaluation

5.5.7.3.1 System Availability and Reliability

The system is provided with two RHR pumps and two residual heat exchangers. If one of the two pumps or one of the two residual heat exchangers is not operable, safe cooldown of the plant is not compromised, but the time for cooldown is extended. See Tables 5.5-15A and 5.5-15B for a failure modes and effects analysis of the RHR system (excluding its ECCS function).

Each of the two 14-inch RHR suction valves is provided with a 10-inch bypass line containing a normally-closed, motor-operated valve. This alternate path would be used in the event of failure of a normal suction valve. The normal suction valves are supplied from different electrical power trains. Also, each normal suction valve is

supplied from a different electrical power train than the associated bypass valve. The bypass lines are sized to pass the design flow rate of one train of the RHR system and, therefore, to support cooldown or maintain safe shutdown. In the unlikely event of a spurious closure of one of the 14 inch suction valves during operation of the RHR system, the RHR pumps could be damaged prior to opening of a bypass line. If this event occurred prior to the reactor being opened for refueling, the RCS could be allowed to repressurize and to utilize natural circulation to remove decay heat through the steam generators. If the suction valve closure occurred after opening the reactor, sufficient time would be available (based on expected heat load) to allow RHR suction to be realigned and the unaffected RHR pump started, or alternately, the safety injection and charging pumps could be used in the short term to inject water into the reactor vessel from the refueling water storage tank. In the long term, the open mode of reactor cooling (see Section 2.4.14) could be aligned and operated.

5.5.7.3.2 Leakage Provisions and Activity Release

In the event of a LOCA, fission products may be recirculated through part of the RHR exterior to the containment. If the residual heat removal pump seal should fail, the water will spill out on the floor in a shielded compartment. The water spillage will drain to the sump.

Should a tube to shell leak develop in the RHR heat exchanger, the water level in the component cooling water surge tank would rise and cause a high level alarm. High radiation from any of the radiation monitors on the CCS heat exchangers' outlets will automatically close the atmospheric vent valves on both surge tanks. If the inflow completely filled the surge tank, the relief valve would lift and discharge water to the waste disposal system.

5.5.7.3.3 Overpressurization Protection

The inlet line to the RHRS is equipped with a pressure relief valve sized to protect the system from inadvertent overpressurization during plant cooldown or startup. The valve has a relief flow capacity of 900 gpm and a required flow of 480 gpm at 350°F and 690 gpm at 200°F at a set pressure of 450 psig. An analysis has been conducted to confirm the capability of the RHRS relief valve to prevent overpressurization in the RHRS. All known credible events were examined for their potential to overpressurize the RHRS. These events included normal operating conditions, infrequent transients, and abnormal occurrences. The analysis confirmed that one relief valve has the capability to keep the RHRS maximum pressure within code limits.

Each discharge line from the RHRS to the RCS is equipped with a pressure relief valve to relieve the maximum possible backleakage through the valves separating the RHRS from the RCS. These relief valves are located in the ECCS (see Figure 6.3-1 Sheet 1).

5.5.7.3.4 Prevention of Exposure of the Residual Heat Removal System to Normal Reactor Coolant System Operating Pressure

The design of the RHRS includes two motor-operated gate isolation valves in series on the inlet line between the high pressure RCS and the lower pressure RHRS. They

are closed during normal operation and are only opened for residual heat removal during a plant cooldown after the RCS pressure and temperature are reduced to less than 370 psig and 350°F. During a plant startup the inlet isolation valves are shut after drawing a bubble in the pressurizer and prior to increasing RCS pressure above 450 psig. These isolation valves are provided with an interlock which is designed to prevent possible exposure of the RHRS to normal RCS operating pressure.

The two inlet isolation and their bypass valves are separately and independently interlocked with pressure signals to prevent valve opening whenever the RCS pressure is greater than approximately 370 psig.

Whenever the RHR isolation inlet and/or bypass valves are open and RCS pressure rises, a high pressure alarm in the MCR alerts the operator to the RHR system alignment. The isolation valves should be closed before the pressure reaches the RHR suction line (containment isolation) pressure relief valve setpoint, but only if there is a steam bubble in the pressurizer or the charging pumps have been stopped.

The use of two independently powered motor-operated valves in the inlet line, along with two independent pressure interlock signals for the open permissive assures a design which meets applicable single failure criteria. Not only more than one single failure but also different failure mechanisms must be postulated to defeat the function of preventing possible exposure of the RHR system to normal RCS operating pressure. These protective interlock designs, in combination with plant operating procedures, provide diverse means of accomplishing the protective function.

Isolation of the low pressure RHRS from the high pressure RCS is provided on the discharge side by two check valves in series. These check valves are located in the ECCS and their testing is described in Section 6.3.4.3.

5.5.7.3.5 Shared Function

The safety function performed by the residual heat removal system is not compromised by its normal function which is normal plant cooldown. The valves associated with the residual heat removal system are normally aligned to allow immediate use of this system in its safeguard mode of operation. The system has been designed in such a manner that two redundant flow circuits are available, assuring the availability of at least one train for safety purposes.

The normal plant cooldown function of the residual heat removal system is accomplished through a suction line arrangement which is independent of any safeguards function. The normal cooldown return lines are arranged in parallel redundant paths and are also utilized as the low head safeguards injection lines to the RCS. Utilization of the same return paths for safety injection as well as for normal cooldown lends assurance to the proper functioning of these lines for safeguards purposes.

5.5.7.3.6 Radiological Consideration

The highest radiation levels experienced by the residual heat removal system are those which would result from a LOCA. Following a LOCA, the residual heat removal system is used as part of the ECCS. During the recirculation phase of ECCS, the residual heat removal system is designed to operate for up to a year pumping water from the containment sump, cooling it, and returning it to the containment to cool the core.

Since, except for some valves and piping, the residual heat removal system is located outside the containment, most of the system is not subjected to the high levels of radioactivity in the containment post-accident environment.

The operation of the residual heat removal system does not involve a radiation hazard for the operators since most RHR operations are controlled remotely (i.e., from the control room). If maintenance of the system is necessary, the portion of system requiring maintenance is isolated by remotely operated valves and/or manual valves with stem extensions which allow operation of the valves from a shielded location. The isolated piping is drained and flushed, if required, before maintenance is performed.

5.5.7.4 Tests and Inspections

Periodic visual inspections and preventive maintenance are conducted during plant operation according to normal industrial practice.

The instrumentation channels for the residual heat removal pump flow instrumentation devices are checked during each refueling cycle and calibrated if the check indicates that recalibration is necessary.

Due to its ECCS function, the residual heat removal pumps are tested as a part of the ECCS testing program (See Section 6.3.4).

5.5.8 Reactor Coolant Cleanup System

The chemical and volume control system provides reactor coolant cleanup and is discussed in Section 9.3.4. The radiological considerations are discussed in Chapter 11.

5.5.9 Main Steam Line and Feedwater Piping

For details of the main steam lines and feedwater piping, see Sections 10.3 and 10.4 respectively.

5.5.10 Pressurizer

5.5.10.1 Design Bases

The general configuration of the pressurizer is shown in Figure 5.5-5. The design data of the pressurizer are given in Table 5.5-9. Codes and material requirements are provided in Section 5.2.

The pressurizer provides a point in the Reactor Coolant System (RCS) where liquid and vapor can be maintained in equilibrium under saturated conditions for pressure and control purposes.

5.5.10.1.1 Pressurizer Surge Line

The surge line is sized to limit the pressure drop between the RCS and the safety valves with maximum allowable discharge flow from the safety valves. Overpressure of the RCS does not exceed 110% of the design pressure.

The surge line and the thermal sleeves at each end are designed to withstand the thermal stresses resulting from volume surges of relatively hotter or colder water which may occur during operation.

The pressurizer surge line nozzle diameter is given in Table 5.5-9 and the pressurizer surge line dimensions are given in Table 5.5-5.

5.5.10.1.2 Pressurizer Volume

The volume of the pressurizer is equal to, or greater than, the minimum volume of steam, water, or total of the two which satisfies all of the following requirements:

(1) The combined saturated water volume and steam expansion volume is sufficient to provide the desired pressure response to system volume changes.

(2) The water volume is sufficient to prevent the heaters from being uncovered during a step load increase of 10% at full power.

(3) The steam volume is large enough to accommodate the surge resulting from 50% reduction of full load with automatic reactor control and 40% steam dump without the water level reaching the high level reactor trip point.

(4) The steam volume is large enough to prevent water relief through the safety valves following a loss of load with the high water level initiating a reactor trip, without reactor control or steam dump.

(5) The pressurizer will not empty following reactor trip and turbine trip.

(6) The ECCS signal is not activated during reactor trip and turbine trip.

5.5.10.2 Design Description

5.5.10.2.1 Pressurizer Surge Line

The pressurizer surge line connects the pressurizer to one reactor hot leg. The line enables continuous coolant volume pressure adjustments between the RCS and the pressurizer.

5.5.10.2.2 Pressurizer Vessel

The pressurizer is a vertical, cylindrical vessel with hemispherical top and bottom heads constructed of carbon steel, with austenitic stainless steel cladding on all surfaces exposed to the reactor coolant. A stainless steel liner or tube may be used in lieu of cladding in some nozzles.

The surge line nozzle and removable electric heaters are installed in the bottom head. The heaters are removable for maintenance or replacement. A thermal sleeve is provided to minimize stresses in the surge line nozzle. A screen at the surge line nozzle and baffles in the lower section of the pressurizer prevent an insurge of cold water from flowing directly to the steam/water interface and assist mixing.

Spray line nozzles and relief and safety valve connections are located in the top head of the vessel. Spray flow is modulated by automatically controlled air-operated valves. The spray valves also can be operated manually by a switch in the control room.

A small continuous spray flow is provided through a manual bypass valve around the power-operated spray valves to assure that the pressurizer liquid is homogeneous with the coolant and to prevent excessive cooling of the spray piping.

During an outsurge from the pressurizer, flashing of water to steam and generating of steam by automatic actuation of the heaters keep the pressure above the minimum allowable limit. During an insurge from the RCS, the spray system, which is fed from two cold legs, condenses steam in the vessel to prevent the pressurizer pressure from reaching the setpoint of the power-operated relief valves for normal design transients.

Material specifications are provided in Table 5.2-8 for the pressurizer, pressurizer relief tank, and the surge line. Design transients for the components of the RCS are discussed in Section 5.2.1.5. Additional details on the pressurizer design cycle analysis are given in Section 5.5.10.3.5.

Pressurizer Support

The skirt type support is attached to the lower head and extends for a full 360° around the vessel. The lower part of the skirt terminates in a bolting flange with bolt holes for securing the vessel to its foundation. The skirt type support is provided with ventilation holes around its upper perimeter to assure free convection of ambient air past the heater plus connector ends for cooling.

Pressurizer Instrumentation

Refer to Chapter 7 and Section 5.6 for details of the instrumentation associated with pressurizer pressure, level, and temperature.

Spray Line Temperatures

Temperatures in the spray lines from two loops are measured and indicated. Alarms from these signals are actuated by low spray water temperature. Alarm conditions indicate insufficient flow in the spray lines.

Safety and Relief Valve Discharge Temperatures

Temperatures in the pressurizer safety and relief valve discharge lines are measured and indicated. An increase in a discharge line temperature is an indication of leakage through the associated valve.

5.5.10.3 Design Evaluation

5.5.10.3.1 System Pressure

Whenever a steam bubble is present within the pressurizer, RCS pressure is maintained by the pressurizer. Analyses indicate that proper control of pressure is maintained for the operating conditions.

A safety limit has been set to ensure that the RCS pressure does not exceed the maximum transient value allowed under the ASME Code, Section III, and thereby assure continued integrity of the RCS components.

Evaluation of plant conditions of operation which follow indicate that this safety limit is not reached.

During startup and shutdown, the rate of temperature change is controlled by the operator. Heatup rate is controlled by pump energy and by the pressurizer electrical heating capacity. This heatup rate takes into account the continuous spray flow provided to the pressurizer. When the reactor core is shutdown, the heaters are de-energized.

When the pressurizer is filled with water, i.e., during initial system heatup, and near the end of the second phase of plant cooldown, RCS pressure is maintained by the letdown flow rate via the residual heat removal system.

5.5.10.3.2 Pressurizer Performance

The pressurizer has a minimum free internal volume. The normal operating water volume at full load conditions is 60% of the free internal vessel volume. Under part load conditions, the water volume in the vessel is reduced for proportional reductions in plant load to 25% of free vessel volume at zero power level. The various plant operating transients are analyzed and the design pressure is not exceeded with the pressurizer design parameters as given in Table 5.5-9.

5.5.10.3.3 Pressure Setpoints

The RCS design and operating pressure together with the safety, power relief and pressurizer spray valves setpoints, and the protection system setpoint pressures are listed in Table 5.2-7.

The design pressure allows for operating transient pressure changes. The selected design margin considers core thermal lag, coolant transport times and pressure drops, instrumentation and control response characteristics and system relief valve characteristics.

5.5.10.3.4 Pressurizer Spray

Two separate, automatically controlled spray valves with remote manual overrides are used to initiate pressurizer spray. In parallel with each spray valve is a manual throttle valve which permits a small continuous flow through both spray lines to reduce thermal stresses and thermal shock when the spray valves open, and to help maintain uniform water chemistry and temperature in the pressurizer. Temperature sensors with low alarms are provided in each spray line to alert the operator to insufficient bypass flow. The layout of the common spray line piping to the pressurizer forms a water seal which prevents the steam buildup back to the control valves. The spray rate is selected to prevent the pressurizer pressure from reaching the operating setpoint of the power relief valves during a step reduction in power level of 10% of full load.

The pressurizer spray lines and valves are large enough to provide adequate spray using as the driving force the differential pressure between the surge line connection in the hot leg and the spray line connection in the cold leg. The spray line inlet connections extend into the cold leg piping in the form of a scoop so that the velocity head of the reactor coolant loop flow adds to the spray driving force. The spray valves and spray line connections are arranged so that the spray will operate when one RCP is not operating. The line may also be used to assist in equalizing the boron concentration between the reactor coolant loops and the pressurizer.

A flow path from the chemical and volume control system to the pressurizer spray line is also provided. This additional facility provides auxiliary spray to the vapor space of the pressurizer during cooldown if the RCPs are not operating. The thermal sleeves on the pressurizer spray connection and the spray piping are designed to withstand the thermal stresses resulting from the introduction of cold spray water.

5.5.10.3.5 Pressurizer Design Analysis

The occurrences considered for pressurizer design cycle analysis are defined as follows:

(1) The temperature in the pressurizer vessel is always, for design purposes, assumed to equal saturation temperature for the existing RCS pressure, except in the pressurizer steam space subsequent to a pressure increase. In this case the temperature of the steam space will exceed the saturation temperature since an isentropic compression of the steam is assumed.

The only exception of the above occurs when the pressurizer is filled solid during plant startup and cooldown.

(2) The temperature shock on the spray nozzle is assumed to equal the temperature of the nozzle minus the cold leg temperature and the temperature shock on the surge nozzle is assumed to equal the pressurizer water space temperature minus the hot leg temperature.

(3) Pressurizer spray is assumed to be initiated instantaneously to its design value as soon as the RCS pressure increases 40 psi above the nominal operating pressure. Spray is assumed to be terminated as soon as the RCS pressure falls 40 psi below normal operating pressure.

(4) Unless otherwise noted, pressurizer spray is assumed to be initiated once per occurrence of each transient condition. The pressurizer surge nozzle is also assumed to be subject to one temperature transient per transient condition, unless otherwise noted.

(5) At the end of each transient, except the faulted conditions, the RCS is assumed to return to a load condition consistent with the plant heat-up transient.

(6) Temperature changes occurring as a result of pressurizer spray are assumed to be instantaneous. Temperature changes occurring on the surge nozzle are also assumed to be instantaneous.

(7) Whenever spray is initiated in the pressurizer, the pressurizer water level is assumed to be at the no load level.

5.5.10.4 Tests and Inspections

The pressurizer is designed and constructed in accordance with ASME Section III, 1971 Edition through Summer 1971 Addenda.

To implement the requirements of ASME Section XI the following welds are designed and constructed to present a smooth transition surface between the parent metal and the weld metal. The path is ground smooth for ultrasonic inspection.

(1) Support skirt to the pressurizer lower head.

(2) Surge nozzle to the lower head.

(3) Nozzles to the safety, relief, and spray lines.

(4) Nozzle to safe end attachment welds.

(5) All girth and longitudinal full penetration welds.

(6) Manway attachment welds.

The liner within the safe end nozzle region extends beyond the weld region to maintain a uniform geometry for ultrasonic inspection.

Peripheral support rings are furnished for the removable insulation modules.

The pressurizer quality assurance program is given in Table 5.5-10.

5.5.11 Pressurizer Relief Tank

5.5.11.1 Design Bases

Design data for the pressurizer relief tank are given in Table 5.5-11.

The tank design is based on the requirement to absorb a discharge of pressurizer steam equal to 110% of the volume above the full power pressurizer water level setpoint. The steam volume requirement is approximately the amount discharged from the pressurizer safety and relief valves if the plant were to suffer a complete loss of load accompanied by a turbine trip without immediate reactor trip. The reactor trip is assumed to be initiated on high pressurizer water level. The tank is not designed to accept a continuous discharge from the pressurizer.

The volume of water in the tank is capable of absorbing the heat from the expected discharge, assuming an initial temperature as governed by the high temperature alarm setpoint and increasing to a final temperature of 200°F. If the temperature in the tank rises above the high temperature alarm setpoint during plant operation, the tank is cooled by spraying in cool water and draining out the warm mixture to the waste processing system.

5.5.11.2 Design Description

The pressurizer relief tank condenses and cools the discharge from the pressurizer safety and relief valves. Discharge from smaller relief valves located inside the containment is also piped to the relief tank. The tank normally contains water and a predominantly nitrogen atmosphere; however, provision is made to permit the gas in the tank to be periodically analyzed to monitor the concentration of hydrogen and/or oxygen.

By means of its connection to the waste processing system, the pressurizer relief tank provides a means for removing any noncondensable gases from the reactor coolant system which might collect in the pressurizer vessel.

Steam is discharged through a sparger pipe under the water level. This arrangement provides for condensing and cooling the steam by mixing it with water that is near ambient temperature. The tank is also equipped with an internal spray and a drain which are used to cool the tank following a discharge. A flanged nozzle is provided on the tank for the pressurizer discharge line connection to the sparger pipe.

5.5.11.2.1 Pressurizer Relief Tank Pressure

The pressurizer relief tank pressure transmitter provides an indication of pressure relief tank pressure. An alarm is provided to indicate high tank pressure.

5.5.11.2.2 Pressurizer Relief Tank Level

The pressurizer relief tank level transmitter supplies a signal for an indicator with high and low level alarms.

5.5.11.2.3 Pressurizer Relief Tank Water Temperature

The temperature of the water in the pressurizer relief tank is indicated and an alarm actuated by high temperature informs the operator that cooling to the tank contents is required.

5.5.11.3 Design Evaluation

The volume of water in the tank is capable of absorbing a discharge of 110% of the pressurizer steam volume above the full power, water level setpoint. Water temperature in the tank is maintained at the nominal containment temperature.

The two rupture discs on the relief tank have a total relief capacity equal to or greater than the combined capacity of the three pressurizer safety valves. The tank design pressure is twice the calculated pressure resulting from the maximum design safety valve discharge described above. The 15 psig minimum rupture discs holders are designed for full vacuum to prevent tank collapse if the contents cool following a discharge without nitrogen being added.

The discharge piping from the safety and relief valves to the relief tank is sufficiently large to prevent backpressure at the safety valves from exceeding 20% of the setpoint pressure at full flow.

5.5.12 Valves

5.5.12.1 Design Bases

All valves connected to the reactor coolant system piping which are larger than 3/4 inch are ANS Safety Class 1 or ASME III, Code Class 1. These valves are either normally closed or are capable of being automatically or remotely closed. All 3/4 inch or smaller valves are Class 2. Class 2 valves which must interface with the Class 1 piping are provided with flow restricting orifices of 3/8 inch or smaller to provide appropriate pipe class breaks. Design data for RCS valves is given in Table 5.5-12.

For a check valve to qualify as part of the RCS it must be located inside the containment system. When the second of two normally open check valves is considered part of the RCS (as defined in Section 5.1), means are provided to periodically assess basic flow leakage of the first valve when closed.

To ensure that the valves will meet the design objectives, the materials specified for construction minimize corrosion/erosion and ensure compatibility with the environment, leakage is minimized to the extent practical by design, and Class 1 stresses are maintained within the limits of ASME Section III Code and the limits specified in Section 5.5.1.

5.5.12.2 Design Description

All valves in the RCS are constructed primarily of stainless steel. Where stainless steel is not utilized, such as for hard surfacing and packing, other materials are in contact with the coolant.

All manual and motor-operated valves of the RCS which are 3 inches and larger are provided with double-packed stuffing boxes and intermediate lantern ring leakoff connections. All throttling control valves, regardless of size, are provided with double-packed stuffing boxes and with stem leakoff connections. All leakoff connections on valves, normally operated in a radioactive fluid, are piped to a closed collection system. Other valves may have their leakoff line connections plugged after the packing has been upgraded with graphite packing rings. This packing configuration will reduce stem leakage to essentially zero.

Gate valves at the Engineered Safety Features interface are wedge design and are essentially straight through. The wedges are flex wedge or solid. All gate valves have backseats. Globe valves are "T" and "Y" style. Check valves are swing type for sizes 2-1/2 inches and larger. All check valves which contain radioactive fluid are stainless steel and do not have body penetrations other than the inlet, outlet and bonnet. The check hinge is serviced through the bonnet.

The accumulator check valve is designed such that at the required flow the resulting pressure drop is within the specified limits. All operating parts are contained within the body. The disc has limited rotation to provide a change of seating surface and alignment after each valve opening.

5.5.12.3 Design Evaluation

The design/analysis requirements for Class 1 valves, as discussed in Section 5.2, limit stresses to levels which ensure the structural integrity of the valves. In addition, the testing programs described in Section 3.9 demonstrate the ability of the valves to operate as required during anticipated and postulated plant conditions.

Reactor coolant chemistry parameters are specified in the design specifications to assure the compatibility of valve construction materials with the reactor coolant. To ensure that the reactor coolant continues to meet these parameters, the chemical composition of the coolant will be analyzed periodically as discussed in the Technical Requirements Manual.

The above requirements and procedures, coupled with the previously described design features for minimizing leakage, ensure that the valves will perform their intended functions as required during plant operation.

5.5.12.4 Tests and Inspections

All RCS valves are tested in accordance with the requirements of the ASME Code, Section III. The tests and inspections in Section 3.9 are performed to ensure the operability of active valves. In-place operational testing is performed on valves in accordance with the ASME OM Code, as described in the In-Service Testing Program and as required in the Technical Specifications.

Valves are accessible for disassembly and internal visual inspection to the extent practical. Plant layout configurations determine the degree of inspectability. The valve quality assurance program is given in Table 5.5-13. Inservice inspection is discussed in Section 5.2.8.

5.5.13 Safety and Relief Valves

5.5.13.1 Design Bases

The combined capacity of the pressurizer safety valves is designed to accommodate the maximum surge resulting from complete loss of load. This objective is met without reactor trip or any operator action by the opening of the steam safety valves when steam pressure reaches the steam-side safety setting.

The pressurizer power-operated relief valves (PORVs) are in compliance with NUREG-0737 (Section II.B.1) for high point venting of pressurizer. The PORVs provide a means for venting noncondensible gasses or steam from the pressurizer which may impair stabilization of the RCS following a design basis event. See Section 5.5.6 for high point venting of the reactor vessel.

The pressurizer PORVs are designed to limit pressurizer pressure to a value below the fixed high pressure reactor trip setpoint. Additionally, the PORVs provide a means to depressurize the RCS following a steam generator tube rupture event, reducing primary to secondary break flow, as well as increasing safety injection flow to refill the pressurizer. They also provide for cold overpressure mitigation (COMs). They are designed to fail to the closed position on loss of power supply.

5.5.13.2 Design Description

The pressurizer safety valves are totally enclosed pop type. The valves are spring loaded, open by direct fluid pressure action, and back pressure compensation features.

The pressurizer PORVs are solenoid-actuated valves which respond to a signal from a pressure sensing system or to manual control. Air venting during plant startup, plant shutdown, or postaccident mitigation of nondesign basis events may be achieved with the PORVs. Remotely operated stop valves are provided to isolate the PORVs if excessive leakage develops.

Temperatures in the pressurizer safety and relief valve discharge lines are measured and indicated. An increase in a discharge line temperature is an indication of leakage through the associated valve.

Design parameters for the pressurizer spray control, safety, and power relief valves are given in Table 5.5-14.

5.5.13.3 Design Evaluation

The pressurizer safety valves prevent reactor coolant system pressure from exceeding 110% of system design pressure, in compliance with the ASME Nuclear Power Plant Components Code.

The pressurizer power relief valves prevent actuation of the fixed reactor high-pressure trip for design transients up to and including the design step load decreases with steam dump. The relief valves also limit undesirable opening of the spring-loaded safety valves. Note that setpoint studies to date indicate that the pressure rise in a four-loop

plant for the design step load decrease of 10% from full power is limited to 60 psi. In both cases, the pressure rise is not sufficient to actuate the power-operated relief valves, and thus this design is conservative.

5.5.13.4 Tests and Inspections

All safety and relief valves are subjected to hydrostatic tests, seat leakage tests, operational tests, and inspections as required. For safety valves that are required to function during a faulted condition, additional tests are performed. These tests are described in Section 3.9.

5.5.14 Component Supports

5.5.14.1 Design Bases

Component supports allow virtually unrestrained lateral thermal movement of the loop during plant operation and provide restraint to the loops and components during accident conditions. The loading combinations and design stress limits are discussed in Section 5.2.1.10. Material properties are discussed in Section 5.2.3. Support design is in accordance with the ASME Boiler and Pressure Vessel Code, Section III, Subsection NF and Subsection NB and also with the "Specifications for Design, Fabrication and Erection of Structural Steel for Buildings," American Institute of Steel Construction, 1969 Edition. The design maintains the integrity of the reactor coolant system boundary for normal and accident conditions and satisfies the requirements of the piping code. Descriptions of piping and supports stress evaluation are presented in Section 5.2.1.10.

5.5.14.2 Description

The support structures are of welded steel construction and are either linear type or plate and shell type. Vessel skirts and saddles are fabricated from plate and shell elements to accommodate a biaxial stress field. Linear supports are tension and compression struts, beams and columns. Attachments are of integral and non-integral types. Integral attachments are welded, cast or forged to the pressure boundary component by lugs, shoes, rings and skirts. Non-integral attachments are bolted, pinned, or bear on the pressure boundary component. By means of sliding joints, clamps, cradles, saddles, or straps the nonintegral supports transmit loads to integral supports.

The supports permit unrestrained thermal growth of the supported systems but restrain vertical, lateral, and rotational movement resulting from seismic and pipe break loadings. This is accomplished using pin ended columns for vertical support and girders, bumper pedestals, hydraulic snubbers, and tie rods for lateral support.

Shimming and grouting enable adjustment of all support elements during erection to achieve correct fit up and alignment. Final setting of equipment is by shimming at the equipment-support interface.

Vessel

Supports for the reactor vessel (Figure 5.5-6) are individual air-cooled rectangular box structures beneath the vessel nozzles bolted to the primary shield wall concrete. Each box structure consists of a horizontal top plate that receives loads from the reactor vessel shoe, a horizontal bottom plate supported by and transferring loads to the primary shield wall concrete, and connecting vertical plates. The supports are air cooled to maintain the supporting concrete temperature within acceptable levels.

Steam Generator

The lower supports for the steam generator (Figure 5.5-7) consists of (1) four vertical pin-ended columns bolted to the bottom of the steam generator support pads, and (2) lateral support girders and pedestals that bear against horizontal bumper blocks bolted to the side of the generator support pads. The upper lateral steam generator support consists of a ring girder around the generator shell connected to hydraulic snubbers on the reactor vessel side and supported by struts on other sides. Loads are transferred from the equipment to the ring girder by means of a number of bumper blocks between the girder and generator shell.

Pump

The reactor coolant pump supports (Figure 5.5-8) consist of three pin-ended structural steel columns and three lateral tie bars. A large diameter bolt connects each column and tie rod to a pump support pad. The outer ends of all three tie rods have slotted pin holes such that they receive only tension load.

Pressurizer

The pressurizer (Figure 5.5-9) is supported at its base by bolting the flange ring to the supporting concrete slab. In addition upper lateral support is provided near the vessel center of gravity by four "V frames" extending horizontally from the compartment walls and bearing against the vessel lugs.

Pipe Restraints

Crossover leg pipe restraints: Two pipe thrust blocks are attached to the pipe elbows and bear against steel structures bolted to the internal concrete. The restraint is included in the Reactor Coolant Loop (RCL) support system. These restraints (Figure 5.5-10) are located on the crossover leg 90° elbows.

Crossover leg vertical run restraints: A strut and thrust block restraint (Figure 5.5-11) is located at the center of the vertical run of the crossover leg piping on the steam generator side.

Steam generator inlet restraint: The steam generator inlet restraint (Figure 5.5-12) is located on the steam generator inlet elbow. The restraint consists of a thrust block and strut arrangement designed to transfer blowdown loads to the concrete base mat.

Primary shield wall restraints: The primary shield wall restraints (Figure 5.5-13) consist of structural stops between each hot and cold leg and their respective shield wall

penetration concrete. The restraints transfer blowdown loads to the primary shield wall concrete.

The crossover leg vertical run restraints, the steam generator inlet nozzle restraint, and the primary shield wall restraints were originally designed to limt excessive deflection of the piping after a large loop break. These large loop pipe breaks have been eliminated by implementation of the leak-before-break criteria. Consequently, the loads on these restraints have also been eliminated.

5.5.14.3 Evaluation

Detailed evaluation ensures the design adequacy and structural integrity of the RCL and the primary equipment supports system. This detailed evaluation is made by comparing the analytical results with established criteria for acceptability. Structural analyses are performed to demonstrate design adequacy for safety and reliability of the plant in case of a large or small seismic disturbance and/or loss-of-coolant accident conditions. Loads which the system is expected to encounter often during its lifetime (thermal, weight, pressure, and operational basis earthquake) are applied and stresses are compared to allowable values as described in Section 5.2.1.10.

The safe shutdown earthquake (SSE) and design basis loss-of-coolant accident, (LOCA) resulting in a rapid depressurization of the system, are required design conditions for public health and safety.

For SSE and LOCA loadings, the basic criteria ensure that the severity will not be increased, thus maintaining the system for a safe shutdown condition.

The rupture of a reactor coolant loop pipe will not violate the integrity of the unbroken leg of the loop. To ensure the integrity and stability of the RCL support system and a safe shutdown of the system under LOCA and the worst combined (Normal + SSE + LOCA) loadings, the stresses in the unbroken piping of a broken loop, unbroken loop piping, and in the supports system are considered in the analysis.

The design parameters resulting from these analyses are provided in Section 5.2.1.2.

5.5.14.4 Tests and Inspections

The design and fabrication is specified in accordance with the AISC Specifications for the "Design, Fabrication, and Erection of Structural Steel for Buildings", 1969 Edition and applicable portions of the ASME Boiler and Pressure Vessel Code. Welder Qualifications, Welding Procedures, and Inspection of Welded Joints are specified to be in accordance with Section IX of the ASME Code.

REFERENCES

(1) Shabbits, W.O. "Dynamic Fracture Toughness Properties of Heavy Section A533 Grade B Class 1 Steel Plate," WCAP-7623, December 1970.

(2) Branch Technical Position BTP RSB 5-1, "Design Requirements for Decay Heat Removal Systems," Revision 2, July 1981.

(3) Sterrett, C. R., Oft, R. R, Gagnon, A. F., Petzold, J. S., "Watts Bar Nuclear Plant Natural Circulation Cooldown Evaluation Program Report," WCAP-12334, September 1990.

(4) Sterrett, C. R., Oft, R. R, Gagnon, A. F., Petzold, J. S., "Watts Bar Nuclear Plant Natural Circulation Cooldown Operational Guidance Report," WCAP-12335, September 1990.

(5) "Diablo Canyon Units 1 and 2 Natural Circulation/Boron Mixing/Cooldown Test Final Post Test Report," WCAP-11086 (Proprietary), WCAP-11095 (Non-proprietary), dated March 1986.

(6) Letter from E. G. Wallace to NRC, "Watts Bar (WBN) Units 1 and 2 - Natural Circulation Testing - Comparison to Diablo Canyon - Safety Evaluation Report Confirmatory Issue 15" (TAC # M79317 and M79318), dated July 11, 1991.

(7) NUREG-0847, Supplement Number 10, "Safety Evaluation Report Related to the Operation of Watts Bar Nuclear Plant Units 1 and 2."

(8) TVA's Response for WBN to Generic Letter 88-17, "Loss of Decay Heat Removal," Dated February 2, 1989, May 31, 1989, February 7, 1995, and October 10, 1995 (TAC No. M69792).

(9) Ansys, Ansys Inc, Canonsburg, PA USA.

(10) Westinghouse Letter WBT-D-0722 "Draft FSAR Markups - Reactor Coolant Loop Piping Excluding Section 3.7, " WBS: 2.6.1.2; P3 Activity WS 568802; Dated June 1, 2009.

Table 5.5-1 Reactor Coolant Pump Design Parameters

Unit Design Pressure, psig Unit Design Temperature,°F Unit Overall Height, ft-in Seal Water Injection, gpm Seal Water Return, gpm Cooling Water Flow, gpm Maximum Continuous Cooling Water Inlet Temperature, °F	2485 650* 27 - 4 8 3 195 105
Pump	
Capacity, gpm Developed Head, ft NPSH Required, ft Suction Temperature, °F Pump Discharge Nozzle, Inside Diameter, in Pump Suction Nozzle, Inside Diameter, in Speed, rpm Water Volume, ft^3 Weight (dry), lbs	94,400** 309** Figure 5.5-2 557.8 27-1/2 31 1186 56 198,740
Motor	
Type	Drip proof, squirrel cage induction, water cooled air exhaust coolers
Power, hp Voltage, Volts Phase Frequency, Hz Insulation class	7000 6600 3 60 Class F, Thermalastic epoxy insulation
Starting Current Input, hot reactor coolant, Amperes Input, cold reactor coolant, Amperes	 3000 Amp @ 6600 volts 505 665
Pump Moment of Inertia, lb-ft^2 maximum	
Flywheel Motor Shaft Impeller	70,000 22,500 520 1,980

* Design temperature of pressure retaining parts of the pump assembly exposed to the reactor coolant and injection water on the high pressure side of the controlled leakage seal shall be that temperature determined for the parts for a primary loop temperature of 650 °F.

** Initial “Design” parameters for a typical 4-loop Westinghouse NSSS plant.

Table 5.5-2 Reactor Coolant Pump Quality Assurance Program

	RT*	UT*	PT*	MT*
Castings	yes		yes	
Forgings				
1. Main Shaft		yes	yes	
2. Main Studs		yes	yes	
3. Flywheel (Rolled Plate)		yes		
Weldments				
1. Circumferential	yes		yes	
2. Instrument Connections			yes	

* RT – Radiographic
UT – Ultrasonic
PT - Dye Penetrant
MT - Magnetic Particle

Table 5.5-3b Steam Generator Design Data

Design Pressure, reactor coolant side, psig	2485
Design Pressure, steam side, psig	1185
Design Temperature, reactor coolant side, °F	650
Design Temperature, steam side, °F	600
Total Heat Transfer Surface Area, ft^2	48,000
Maximum Moisture Carryover, wt %	0.25
Overall Height, ft-in	67-8
Number of U-Tubes	4674
U-Tube Outer Diameter, in	0.750
Tube Wall Thickness, nominal, in	0.043
Number of Manways	4
Inside Diameter of Manways, in	16
Number of Inspection Ports	4
Inside Diameter of Inspection Ports, in	2
Design Fouling Factor hr-ft^2 - °F/BTU	0.00005
Preheat Section (Design Fouling Factor hr-ft^2 - °F/BTU)	0.00010

Table 5.5-4b Steam Generator Quality Assurance Program During Construction (1)

		RT*	UT*	PT*	MT*	ET*
Tubesheet						
1.	Forging		yes		yes	
2.	Cladding		yes(+)	yes(++)		
Channel Head						
1.	Casting	yes			yes	
2.	Cladding			yes		
Secondary Shell & Head						
1.	Plates		yes			
Tubes			yes			yes
Nozzles (Forgings)			yes		yes	
Weldments						
1.	Shell, longitudinal	yes			yes	
2.	Shell, circumferential	yes			yes	
3.	Cladding (channel head-tubesheet joint cladding restoration)			yes		
4.	Steam and feedwater nozzle to shell	yes			yes	
5.	Support brackets				yes	
6.	Tube to tubesheet			yes		
7.	Instrument connections (primary and secondary)				yes	
8.	Temporary attachments after removal				yes	
9.	After hydrostatic test (all welds and complete channel head - where accessible)				yes	
10.	Nozzle safe ends (if forgings)	yes		yes		
11.	Nozzle safe ends (if weld deposit)			yes		

* RT - Radiographic
UT - Ultrasonic
PT - Dye Penetrant
MT - Magnetic Particle
ET - Eddy Current
(+) Flat Surfaces Only
(++) Weld Deposit Areas Only

(1) Repairs and replacement to the SG must meet the original construction code requirements, including NDE as listed, unless the design output specification for the repair or replacement allows a later code edition.

Table 5.5-5 Reactor Coolant Piping Design Parameters (Sheet 1 of 1)

Reactor Inlet Piping, inside diameter, in	27-1/2
Reactor Inlet Piping, nominal wall thickness, in	2.32
Reactor Outlet Piping, inside diameter, in	29
Reactor Outlet Piping, nominal wall thickness, in	2.45
Coolant Pump Suction Piping, inside diameter, in	31
Coolant Pump Suction Piping, nominal wall thickness, in	2.60
Pressurizer Surge Line Piping, inside diameter, in	11.188
Pressurizer Surge Line Piping, nominal wall thickness, in	1.406
Reactor Coolant Loop Piping	
Design/Operating Pressure, psig	2485/2235
Design Temperature, °F	650
Pressurizer Surge Line	
Design Pressure, psig	2485
Design Temperature, °F	680
Pressurizer Safety Valve Inlet Line	
Design Pressure, psig	2485
Design Temperature, °F	680
Pressurizer (Power-Operated) Relief Valve Inlet Line	
Design Pressure, psig	2485
Design Temperature, °F	680
Pressurizer Relief Tank Inlet Line	
Design Pressure, psig	600
Design Temperature, °F	600

Table 5.5-6 Reactor Coolant Piping Quality Assurance Program (Sheet 1 of 1)

	RT*	UT*	PT*
Fittings and Pipe (Castings)	yes		yes
Fittings and Pipe (Forgings)		yes	yes
Weldments			
1. Circumferential	yes		yes
2. Nozzle to runpipe (Except no RT for nozzles less than 6 inches)	yes		yes
3. Instrument connections			yes
Castings	yes		yes (after finishing)
Forgings		yes	yes (after finishing)

* RT - Radiographic

UT - Ultrasonic

PT - Dye Penetrant

Table 5.5-7 Design Bases For Residual Heat Removal System Operation

Residual Heat Removal System Start Up	~4 hours after Reactor S
Reactor Coolant System Initial Pressure, psig	~370
Reactor Coolant System Initial Temperature, °F	~350
Component Cooling Water Normal Inlet Temperature, °F	95
UNIT 1 ONLY - RCS Cooldown Time, Hours After Initiation Of Residual Heat Removal System Operation based on an ERCW temperature of 88°F	~19
UNIT 2 ONLY - RCS Cooldown Time, Hours After Initiation Of Residual Heat Removal System Operation	~16
Reactor Coolant System Temperature At End Of Cooldown, °F	140
Decay Heat Generation At 20 Hours After Reactor Shutdown, BTU/hr(1)	74.8×10^6

(1) Original sizing basis

Table 5.5-8 Residual Heat Removal System Component Data

Residual Heat Removal Pump		
Number	2	
Design Pressure, psig	600	
Design Temperature, °F	400	
Design Flow, gpm (original design point)	3000	
Design Head, ft (original design point)	375	
Maximum Start Time*, Seconds	3.6	
Max. Flow Rate, gpm	4500-5000**	
Residual Heat Exchanger		
Number	2	
Design Heat Removal Capacity, BTU/hr	37.4×10^6	
	Tube-Side	Shell-Side
Design Pressure, psig	600	150
Design Temperature,°F	400	200
Design Flow, lb/hr	1.48×10^6	2.47×10^6
Material	Austenitic Stainless Steel	Carbon Steel
Fluid	Reactor Coolant	Component Cooling Water

* Maximum start time is for acceleration to full rated speed and capability of injection

** 4500-5000 gpm is the established maximum pump performance flowrate. 6000 gpm has been used as the pump's upper flow limit in the recirculation mode runout evaluation.

Table 5.5-9 Pressurizer Design Data

Design Pressure, psig	2485
Design Temperature, °F	680
Surge Line Nozzle Diameter, in	14
Heatup Rate of Pressurizer Using Heaters Only, °F/hr	40
Internal Volume, ft^3	1806.3

Table 5.5-10 Pressurizer Quality Assurance Program

	RT*	UT*	PT*	MT*
Heads				
1. Plates		yes		
2. Cladding			yes	
Shell				
1. Plates		yes		
2. Cladding			yes	
Heaters				
1. Tubing (+)		yes	yes	
2. Centering of element	yes			
Nozzle (Forgings)		yes	yes**	yes**
Weldments				
1. Shell, longitudinal	yes			yes
2. Shell, circumferential	yes			yes
3. Cladding			yes	
4. Nozzle Safe End (if forging)	yes		yes	
5. Instrument Connections			yes	
6. Support Skirt		yes		yes
7. Temporary Attachments (after removal)				yes
8. All external pressure boundary welds after shop hydrostatic test				yes

* RT - Radiographic
UT - Ultrasonic
PT - Dye Penetrant
MT - Magnetic Particle
(+) Or a UT and ET
** MT or PT

Table 5.5-11 Pressurizer Relief Tank Design Data

Design Pressure, psig	100
Rupture Disc Release Pressure, psig Nominal:	91
Range:	86-100
Design Temperature, °F	340
Total Rupture Disc Relief Capacity, lb/hr at 100 psig	1.6×10^6

Table 5.5-12 Reactor Coolant System Valve Design Parameters

Design/Normal Operating Pressure, psig	2485/2235
Pre/Operational Plant Hydrotest, psig	3107
Design Temperature, °F	650

Table 5.5-13 Reactor Coolant System Valves Quality Assurance Program

	RT*	UT*	PT*
Boundary Valves, Pressurizer Relief and Safety Valves			
Castings (larger than 4 inches)	yes		yes
(2 inches to 4 inches)	yes(1)		yes
Forgings (larger than 4 inches)	(2)	(2)	yes
(2 inches to 4 inches)			yes

* RT – Radiographic
UT – Ultrasonic
PT - Dye Penetrant
(1) - Weld ends only
(2) - Either RT or UT

Table 5.5-14 Pressurizer Valves Design Parameters

Pressurizer Spray Control Valves	
Number	2
Design pressure, psig	2485
Design temperature, °F	650
Design flow for valves full open, each, gpm	400
Pressurizer Safety Valves	
Number	3
Maximum relieving capacity, ASME rated flow, lb/hr	420,000
Set pressure, psig	2485
Design Temperature, °F	680
Fluid	Saturated steam
Backpressure:	
Normal, psig	3 to 5
Expected during discharge, psig	350
Pressurizer Power Relief Valves	
Number	2
Design pressure, psig	2485
Design temperature °F	680
Relieving capacity at 2324 psig, lb/hr (per valve)	210,000
Fluid	Saturated steam

Table 5.5-15 Deleted by Amendment 78

Table 5.5-15a Failure Modes And Effects Analysis For Active Failures For The Residual Heat Removal System (Page 1 of 26)

Item No.	Component	Function	Failure Mode	Potential Cause	Method of Detection	Effect on System	Effect on Plant	Remarks
1	FCV-74-1 Train A	Isolates RHRS from RCS when RCS Press. and Temp. > RHRS design press. and temp.	Spurious opening	Operator error; hot short in control wiring; mechanical failure	Status monitor annunciator (valve open concurrent with high RCS pressure) and ind. light in MCR	Loss of redundancy in RHR isolation from RCS	None. Redundant FCV-74-2 can provide isolation of RHRS from RCS. (FCV-74-8 is normally closed unless FCV-74-2 fails to open on demand)	Train A FCV-74-1 and Train B FCV-74-2 are in series on line from #4 hot leg to RHR suction header. Each valve has a parallel bypass valve powered by the opposite train (Train B FCV-74-9 for FCV-74-1 and Train A FCV-74-8 for FCV-74-2). All four valves are normally closed, with administrative control (breaker open) to keep them closed. Also, each valve control circuit has an independent pressure permissive (RCS press. < set point) in its opening circuit (manual only). Spurious opening of any of these isolation or bypass valves is, therefore, extremely unlikely.
		Isolates RHRS from RCS for protection of RHRS from overpressure during a mass/heat input event during modes 4 and 5.	Fails to close or stuck open.	Mechanical failure; Train A power failure; operator error.	Status monitor annunciator (valve open concurrent with high RCS pressure) and ind. light in MCR.	Loss of redundancy in RHR isolation from RCS	None. Redundant FCV-74-2 can provide isolation of RHRS from RCS. (FCV-74-8 is normally closed unless FCV-74-2 fails to open on demand)	

Table 5.5-15a Failure Modes And Effects Analysis For Active Failures For The Residual Heat Removal System (Page 2 of 26)

Item No.	Component	Function	Failure Mode	Potential Cause	Method of Detection	Effect on System	Effect on Plant	Remarks
	FCV-74-1 Train A (Cont'd)							Even if permissive interlock of FCVs 74-1 and 74-2 fails (spuriously signals that 63-1 is closed when it is open) and 74-1 and 74-2 are opened by the operator, check valve 63-502 isolates the RWST from the RCS and prevents contamination of RWST.

Table 5.5-15a Failure Modes And Effects Analysis For Active Failures For The Residual Heat Removal System (Page 3 of 26)

Item No.	Component	Function	Failure Mode	Potential Cause	Method of Detection	Effect on System	Effect on Plant	Remarks
	FCV-74-1 Train A (Cont'd)	Provides flowpath for Reactor Coolant to RHRS for rejection of RCS heat to CCS (Shutdown Cooling, Modes 4, 5, and 6)	Fails to open, stuck closed, or spuriously closes after opening.	Mechanical failure; Train A MOV board or vital AC power failure; operator error; hot short in control wiring.	Ind. light in MCR.	Shutdown cooling interrupted until bypass valve (FCV-74-9) opened from RMOV board.	None. See 'Remarks' column.	RCS flowpath to RHR Pump suction can be established and safety functions achieved by opening FCVs 74-2 and 74-9 with Train B power and independent pres. permissive signal. However, since the bypass line is 10" vs. 14" normal line, cooldown will take longer if FCV-74-1 or FCV-74-2 cannot be opened, since the 10" line can supply suction to only one RHR Pump. No single failure of power train or RCS pressure signals or interlocks with FCVs 63-1 and 63-72 will prevent a flowpath from being established for shutdown cooling with at least one RHR Pump.

Table 5.5-15a Failure Modes And Effects Analysis For Active Failures For The Residual Heat Removal System (Page 4 of 26)

Item No.	Component	Function	Failure Mode	Potential Cause	Method of Detection	Effect on System	Effect on Plant	Remarks
2	FCV-74-2 Train B	Isolate RHRS from RCS when RCS Press. and Temp. > RHRS design press. and temp.	Spurious opening	Operator error; hot short in control wiring; mechanical failure	Status monitor annunciator (valve open concurrent with high RCS pressure) and ind. light in MCR	Loss of redundancy in RHR isolation from RCS	None. Redundant FCV-74-1 can provide isolation of RHRS from RCS. (FCV-74-9 is normally closed unless FCV-74-1 fails to open on demand)	Train A FCV-74-1 and Train B FCV-74-2 are in series on line from #4 hot leg to RHR suction header. Each valve has a parallel bypass valve powered by the opposite train (Train B FCV-74-9 for FCV-74-1 and Train A FCV-74-8 for FCV-74-2). All four valves are normally closed, with administrative control (breaker open) to keep them closed. Also, each valve control circuit has an independent pressure permissive (RCS press. < set point) in its opening circuit (manual only). Spurious opening of any of these isolation or bypass valves is, therefore, extremely unlikely.
		Isolate RHRS from RCS for protection of RHRS from overpressure during a mass/heat input event during modes 4 and 5.	Fails to close or stuck open	Mechanical failure; Train B power failure; operator error.	Status monitor annunciator (valve open concurrent with high RCS pressure) and ind. light in MCR	Loss of redundancy in RHR isolation from RCS	None. Redundant FCV-74-1 can provide isolation of RHRS from RCS. (FCV-74-9 is normally closed unless FCV-74-1 fails to open on demand)	

Table 5.5-15a Failure Modes And Effects Analysis For Active Failures For The Residual Heat Removal System (Page 5 of 26)

Item No.	Component	Function	Failure Mode	Potential Cause	Method of Detection	Effect on System	Effect on Plant	Remarks
	FCV-74-2 Train B (Cont'd)							Even if permissive interlock of FCVs 74-1 and 74-2 fail (spuriously signals that 63-1 is closed when it is open) and 74-1 and 74-2 are opened by the operator, check valve 63-502 isolates the RWST from the RCS and prevents contamination of RWST.

Table 5.5-15a Failure Modes And Effects Analysis For Active Failures For The Residual Heat Removal System (Page 6 of 26)

Item No.	Component	Function	Failure Mode	Potential Cause	Method of Detection	Effect on System	Effect on Plant	Remarks
	FCV-74-2 Train B (Cont'd)	Provides flowpath for Reactor Coolant to RHRS for rejection of RCS heat to CCS (Shutdown Cooling Modes 4, 5, and 6)	Fails to open, stuck closed or spuriously closes after opening.	Mechanical failure; Train B power failure; operator error; hot short in control wiring.	Ind. light in MCR.	Shutdown cooling interrupted until bypass valve (FCV-74-8) opened from RMOV board.	None. See 'Remarks' column.	RCS flowpath to RHRP suction can be established and safety functions achieved by opening FCVs 74-1 and 74-8 with Train A power and independent press. permissive signal. However, since the bypass line is 10" vs 14" normal line, cooldown will take longer if FCV-74-1 or FCV-74-2 cannot be opened, since the 10" line can supply suction to only one RHRP. No single failure of power train RCS pressure signals or interlocks with FCVs 63-1 and 63-73 will prevent a flowpath from being established for shutdown cooling with at least one RHRP.

Table 5.5-15a Failure Modes And Effects Analysis For Active Failures For The Residual Heat Removal System (Page 7 of 26)

Item No.	Component	Function	Failure Mode	Potential Cause	Method of Detection	Effect on System	Effect on Plant	Remarks
3	FCV-74-8 Train A	Isolates RHRS from RCS when RCS Press. and temp. > RHRS design press. and temp.	Spurious opening	Operator error; hot short in control wiring; mechanical failure	Status monitor annunciator (valve open concurrent with high RCS pressure) and ind. light on RMOV board.	Loss of redundancy in RHRS isolation from RCS	None. Isolation valve FCV-74-1 can provide isolation of RHRS from RCS. (FCV-74-9 is normally closed unless FCV-74-1 fails to open on demand)	The valve is normally closed, with administrative control (breaker open) to keep it closed. An open permissive signal from RCS pressure in the valve control circuit makes spurious opening extremely unlikely. Failure to open or failure to close not listed since valve is used (opened) during cooldown only if FCV-74-2 fails to open.

Table 5.5-15a Failure Modes And Effects Analysis For Active Failures For The Residual Heat Removal System (Page 8 of 26)

Item No.	Component	Function	Failure Mode	Potential Cause	Method of Detection	Effect on System	Effect on Plant	Remarks
4	FCV-74-9 Train B	Isolates RHRS from RCS when RCS Press. and temp. > RHRS design press. and temp.	Spurious opening	Operator error; hot short in control wiring; mechanical failure	Status monitor annunciator (valve open concurrent with high RCS pressure) and ind. light on RMOV board.	Loss of redundancy in RHRS isolation from RCS	None. Isolation valve FCV-74-2 can provide isolation of RHRS from RCS. (FCV-74-8 is normally closed unless FCV-74-2 fails to open on demand)	The valve is normally closed with administrative control (breaker open) to keep it closed. An open permissive signal from RCS pressure in the valve control circuit makes spurious opening extremely unlikely. Failure to open or failure to close not listed since valve is used (opened) during cooldown only if FCV-74-1 fails to open.
5	FCV-74-3 Train A	Provides suction flowpath to RHRP A-A from RCS (Shutdown Cooling Mode)	Stuck closed or spuriously closed.	Mechanical failure; Train A power failure; operator error; spurious close signal from FCV-63-72; open permissive signal failure.	Alarm, status monitor annunciator and ind. light in MCR.	Loss of redundancy in shutdown cooling.	None. RHRP B-B is not affected and remains available.	Cooldown may be extended with only one RHRP.

Table 5.5-15a Failure Modes And Effects Analysis For Active Failures For The Residual Heat Removal System (Page 9 of 26)

Item No.	Component	Function	Failure Mode	Potential Cause	Method of Detection	Effect on System	Effect on Plant	Remarks
	FCV-74-3 Train A (Cont'd)	Isolates RHRP A-A suction from RWST and provides passive failure isolation (containment spray recirc. mode)	Fails to close or stuck open.	Mechanical failure; Train A power failure; failure of close signal from FCV-63-72 limit switch.	Ind. light in MCR.	None. See 'Remarks' column	None. See 'Remarks' column	This valve closes automatically to initiate recirculation mode of SI. Use of RHRS for containment spray is manually initiated, if containment pressure remains above setpoint one hour after a SI signal. The RHR suction header would have been isolated from the RWST by closing FCV-63-1 before the RHRS would be used to provide RHR containment spray unless Train A power failure causes failure of 74-3 to close. In this event, CS Train B & RHR Train B remain available and can provide required containment spray flow.

Table 5.5-15a Failure Modes And Effects Analysis For Active Failures For The Residual Heat Removal System (Page 10 of 26)

Item No.	Component	Function	Failure Mode	Potential Cause	Method of Detection	Effect on System	Effect on Plant	Remarks
6	FCV-74-21 Train B	Provides suction flowpath to RHRP B-B from RCS (Shutdown Cooling Mode)	Stuck closed or spuriously closed.	Mechanical failure; Train B power failure; operator error; spurious close signal from FCV-63-73; open permissive signal failure.	Alarm, status monitor annunciator and ind. light in MCR.	Loss of redundancy in shutdown cooling.	None. RHRP A-A is not affected and remains available.	Cooldown may be extended with only one RHRP.

Table 5.5-15a Failure Modes And Effects Analysis For Active Failures For The Residual Heat Removal System (Page 11 of 26)

Item No.	Component	Function	Failure Mode	Potential Cause	Method of Detection	Effect on System	Effect on Plant	Remarks
	FCV-74-21 Train B (Cont'd)	Isolates RHRP B-B suction from RWST and provides passive failure isolation (containment spray recirc. mode)	Fails to close or stuck open.	Mechanical failure; Train B power failure; failure of close signal from FCV-63-73 limit switch.	Ind. light in MCR.	None. See 'Remarks' column.	None. See 'Remarks' column.	This valve closes automatically to initiate recirculation mode of SI. Use of RHRS for containment spray is manually initiated, if containment pressure remains above setpoint one hour after a SI signal. The RHR suction header would have been isolated from the RWST by closing FCV-63-1 before the RHRS would be used to provide RHR containment spray unless Train B power failure causes failure of 74-21 to close. In this event, CS Train A and RHR Train A remain available and can provide required containment spray flow.

Table 5.5-15a Failure Modes And Effects Analysis For Active Failures For The Residual Heat Removal System (Page 12 of 26)

Item No.	Component	Function	Failure Mode	Potential Cause	Method of Detection	Effect on System	Effect on Plant	Remarks
7	RHR Pump A-A	Pump reactor coolant through Residual Heat Exchanger and back to RCS (shutdown cooling mode) Pump RB sump water through RHR heat exchanger to the RHR spray header (containment spray mode)	Fails to start; fails while running	Mechanical failure; Train A power failure; motor overload; electrical fault; operator error.	Alarm and ind. light in MCR; HS position.	Loss of redundancy in shutdown cooling or additional containment spray.	None. RHRP B-B remains available.	Cooldown may be extended (shutdown cooling mode). RHRP B-B remains available for containment spray. One train of CSS and one train of RHRS can provide adequate containment spray flow.

Table 5.5-15a Failure Modes And Effects Analysis For Active Failures For The Residual Heat Removal System (Page 13 of 26)

Item No.	Component	Function	Failure Mode	Potential Cause	Method of Detection	Effect on System	Effect on Plant	Remarks
8	RHR Pump B-B	Pump reactor coolant through Residual Heat Exchanger and back to RCS (shutdown cooling mode) Pump RB sump water through Residual Heat Exchanger to the RHR spray header (containment spray mode).	Fails to start; fails while running	Mechanical failure; Train B power failure; motor overload; electrical fault; operator error	Alarm, and ind. light in MCR; HS position.	Loss of redundancy in shutdown cooling or additional containment spray.	None. RHRP A-A remains available	Cooldown may be extended (shutdown cooling mode). RHRP A-A remains available for containment spray. One train of CSS and one train of RHRS can provide adequate containment spray flow.

Table 5.5-15a Failure Modes And Effects Analysis For Active Failures For The Residual Heat Removal System (Page 14 of 26)

Item No.	Component	Function	Failure Mode	Potential Cause	Method of Detection	Effect on System	Effect on Plant	Remarks
9	FCV-74-12 Train A	Opens to provide min. flow path for RHRP A-A protection when flow is below setpoint (spray and cooldown modes)	Fails to open, stuck closed or spuriously closed.	Mechanical failure; operator error (HS in wrong position); flow switch FS-74-12A, FS-74-12B failure; power failure.	Ind lights in MCR; low flow alarm (for failure not due to flow switch failure) HS position. Local FI flow indication	Min. flow circuit for RHRP A-A unavailable, with damage to RHRP A-A possible.	None. RHRP B-B still available.	
		Closes to isolate min. flow path when flow is above setpoint. (spray and cooldown modes)	Fails to close, stuck open or spuriously open	Mechanical failure; operator error (HS in wrong position); flow switch FS-74-12A, FS-74-12B failure; power failure	Ind lights in MCR; HS position, local FIS flow indication	Reduced flow from RHRP A-A	None. RHRP B-B still available.	
10	FCV-74-24 Train B	Opens to provide min. flow path for RHRP B-B protection when flow is below setpoint (spray and cooldown modes)	Fails to open, stuck closed or spuriously closed.	Mechanical failure; operator error (HS in wrong position); flow switch FS-74-24A, FS-74-24B failure; power failure.	Ind. lights in MCR; low flow alarm (for failure not due to flow switch failure) HS position. Local FI flow indication	Min. flow circuit for RHRP B-B unavailable, with damage to RHRP B-B possible.	None. RHRP A-A still available.	

Table 5.5-15a Failure Modes And Effects Analysis For Active Failures For The Residual Heat Removal System (Page 15 of 26)

Item No.	Component	Function	Failure Mode	Potential Cause	Method of Detection	Effect on System	Effect on Plant	Remarks
	FCV-74-24 Train B (Cont'd)	Closes to isolate min. flow path when flow is above setpoint. (spray and cooldown modes)	Fails to close, stuck open or spuriously open	Mechanical failure; operator error (HS in wrong position); flow switch FS-74-24A, FS-74-24B failure; power failure	Ind lights in MCR; HS position, local FI flow indication	Reduced flow from RHRP B-B	None. RHRP A-A still available.	
11	Check Valve 74-514	Opens to provide flow path for RHRP A-A discharge (spray and cooldown modes)	Stuck closed	Mechanical failure	Pump motor amps less than full load; low RHRP A-A flow alarm from FS-74-12A.	Loss of redundancy in RHRS.	None. RHRP B-B can provide required flow for containment spray or shutdown cooling.	Failure mode is credible; Per IEEE Std. 500-1984, check valves at PWRs have a failure rate (fail to open) of 60 per million demands. If failure occurs in shutdown cooling mode, cooling extended.

Table 5.5-15a Failure Modes And Effects Analysis For Active Failures For The Residual Heat Removal System (Page 16 of 26)

Item No.	Component	Function	Failure Mode	Potential Cause	Method of Detection	Effect on System	Effect on Plant	Remarks
	Check Valve 74-514 (Cont'd)	Prevents flow of RHRP B-B discharge backward through idle RHRP A-A (cooldown mode)	Stuck open or fails to backseat	Mechanical failure	Pump motor amps above full load; discharge pr. high on idle pump.	See 'Remarks' column	None. RHRP B-B can provide required flow for shutdown cooling.	Per IEEE Std. 500-1984, failure mode is internal leakage rather than gross failure to close. The potential for reverse flow occurs during the short time between the opening of HCV-74-36 and starting of RHRP A-A. During this interval, flow from RHRS may be reduced.
12	Check Valve 74-515	Opens to provide flow path for RHRP B-B discharge (spray and cooldown modes)	Stuck closed	Mechanical failure	Pump motor amps less than full load; low RHRP B-B flow alarm from FS-74-24A.	Loss of redundancy in RHRS	None. RHRP A-A can provide required flow for containment spray or shutdown cooling.	Failure mode is credible; Per IEEE Std. 500-1984, check valves at PWRs have a failure rate (fail to open) of 60 per million demands. If failure occurs in shutdown cooling mode, cooling extended.

Table 5.5-15a Failure Modes And Effects Analysis For Active Failures For The Residual Heat Removal System (Page 17 of 26)

Item No.	Component	Function	Failure Mode	Potential Cause	Method of Detection	Effect on System	Effect on Plant	Remarks
	Check Valve 74-515 (Cont'd)	Prevents flow of RHRP A-A discharge backward through idle RHRP B-B (cooldown mode)	Stuck open or fails to backseat	Mechanical failure	Pump motor amps above full load; discharge pr. high on idle pump.	See 'Remarks' column	None. RHRP A-A can provide required flow for shutdown cooling	Per IEEE Std. 500-1984, failure mode is internal leakage rather than gross failure to close. The potential for reverse flow occurs during the short time between the opening of HCV-74-37 and starting of RHRP B-B. During this interval, flow from RHRS may be reduced.

Table 5.5-15a Failure Modes And Effects Analysis For Active Failures For The Residual Heat Removal System (Page 18 of 26)

Item No.	Component	Function	Failure Mode	Potential Cause	Method of Detection	Effect on System	Effect on Plant	Remarks
13	FCV-74-33 Train A	Closes to provide train separation in RHRS for 1) passive failure protection and 2) for aligning RHR to accomodate RHR flow to CCP and SIP suction and containment spray, and for shutdown cooling operation	Fails to close or stuck open. No additional failures assumed following a passive failure.	Mechanical failure; Train A power failure; operator error.	Ind. light in MCR	RHRP A-A remains connected to crosstie line up to Train B valves 74-35 and 63-172	None. Train separation can be achieved by closing Train B valves 74-35 and 63-172.	Valve kept open during reactor operation and injection mode. Failure to open as a failure mode is not a problem since the valve has no flow path function during shutdown cooling or RHR containment spray modes.

Table 5.5-15a Failure Modes And Effects Analysis For Active Failures For The Residual Heat Removal System (Page 19 of 26)

Item No.	Component	Function	Failure Mode	Potential Cause	Method of Detection	Effect on System	Effect on Plant	Remarks
14	FCV-74-35 Train B	Closes to provide train separation in RHRS for 1) passive failure protection and 2) for aligning RHR to accommodate RHR flow to CCP and SIP suction and containment spray, and for shutdown cooling operation	Fails to close or stuck open. No additional failures assumed following a passive failure.	Mechanical failure; Train B power failure; operator error.	Ind. light in MCR	RHRP B-B remains connected to crosstie line up to Train A valve 74-33	None. Train separation can be achieved by closing Train A valve 74-33.	Valve kept open during reactor operation and injection mode. Failure to open as a failure mode is not a problem since the valve has no flow path function during shutdown cooling or RHR containment spray modes.
15	FCV-63-93 Train A	Provide flow path for RHRP A-A discharge to cold legs 2 and 3 (shutdown cooling mode)	Fails to open, stuck closed or spuriously closes.	Mechanical failure; Train A power failure; operator error.	Alarm, status monitor annunciator and ind. light in MCR; possible low flow alarm from FS-74-12A, low flow ind. on FI-63-91A/B.	Loss of redundancy in shutdown cooling.	None. RHRP B-B is not affected by failure and can provide shutdown cooling flow.	Cooldown may be extended.

Table 5.5-15a Failure Modes And Effects Analysis For Active Failures For The Residual Heat Removal System (Page 20 of 26)

Item No.	Component	Function	Failure Mode	Potential Cause	Method of Detection	Effect on System	Effect on Plant	Remarks
	FCV-63-93 Train A (Cont'd)	Isolate RHRP A-A from cold legs 2 and 3 to direct flow to RHR spray header (containment spray mode)	Fails to close, stuck open or spuriously reopens.	Mechanical failure; Train A power failure; operator error.	Ind. light in MCR	Possible loss of redundancy in RHR spray. See 'Remarks' column.	None. RHRP B-B is not affected by failure and can provide RHR containment spray flow. One CSS train and one RHR train can provide adequate containment spray flow.	One RHR loop can concurrently supply suction to one safety injection pump and one CCP which will supply ECCS coolant to the reactor core, and one RHR containment spray header.
16	FCV-63-94 Train B	Provide flow path for RHRP B-B discharge to cold legs 1 and 4 (shutdown cooling mode)	Fails to open, stuck closed or spuriously closes.	Mechanical failure; Train B power failure; operator error.	Alarm, status monitor annunciator and ind. light in MCR; possible low flow alarm from FS-74-24A, low flow ind. on FI-63-92A/B.	Loss of redundancy in shutdown cooling.	None. RHRP A-A is not affected by failure and can provide shutdown cooling flow.	Cooldown may be extended.

Table 5.5-15a Failure Modes And Effects Analysis For Active Failures For The Residual Heat Removal System (Page 21 of 26)

Item No.	Component	Function	Failure Mode	Potential Cause	Method of Detection	Effect on System	Effect on Plant	Remarks
	FCV-63-94 Train B (Cont'd)	Isolate RHRP B-B from cold legs 1 and 4 to direct flow to RHR spray header (containment spray mode)	Fails to close, stuck open or spuriously reopens.	Mechanical failure; Train B power failure; operator error.	Ind. light in MCR.	Possible loss of redundancy in RHR spray. See 'Remarks' column.	None. RHRP A-A is not affected by failure and can provide RHR spray flow. One CSS train and one RHR train can provide adequate containment spray flow.	One RHR loop can concurrently supply suction to one safety injection pump and one CCP which will supply ECCS coolant to the reactor core, and one RHR containment spray header.
17	FCV-72-40 Train A	Provides flow path for RHRP A-A discharge to RHR spray header A	Fails to open, or stuck closed.	Mechanical failure; Train A power failure; operator error; open permissive signal (from 63-72) failure.	Ind. light in MCR.	Loss of redundancy, in RHR containment spray.	None. RHRP B-B can provide RHR containment spray to RHR spray header B.	Normally closed valve can be opened only remote manually. Interlock prevents opening unless RHRP A-A containment sump suction valve 63-72 is fully open. RHRS will not be used for containment spray until at least one hour after an accident.

Table 5.5-15a Failure Modes And Effects Analysis For Active Failures For The Residual Heat Removal System (Page 22 of 26)

Item No.	Component	Function	Failure Mode	Potential Cause	Method of Detection	Effect on System	Effect on Plant	Remarks
		Isolates RHR spray header A from RHRP A-A discharge	Fails to close, stuck open or spuriously opened.	Mechanical failure; Train A power failure; operator error.	Alarm, status monitor annunciator and ind. light in MCR	Reduction of recirc. flow to RCS hot/cold legs and to CCP suction.	None. RHRP B-B can provide required RHRS flow.	Spurious opening during injection mode cannot occur without two failures: 1. operator error or hot short in control wiring, and 2. valve 63-72 limit switch failure or hot short on another cable.
18	FCV-72-41 Train B	Provides flow path for RHRP B-B discharge to RHR spray header B	Fails to open, or stuck closed.	Mechanical failure; Train B power failure; operator error; open permissive signal (from 63-73) failure.	Ind. light in MCR.	Loss of redundancy in RHR containment spray.	None. RHRP A-A can provide RHR containment spray to RHR spray header A.	Normally closed valve can be opened only remote manually. Interlock prevents opening unless RHRP B-B containment sump suction valve 63-73 is fully open. RHRS will not be used for containment spray until at least one hour after an accident.

Table 5.5-15a Failure Modes And Effects Analysis For Active Failures For The Residual Heat Removal System (Page 23 of 26)

Item No.	Component	Function	Failure Mode	Potential Cause	Method of Detection	Effect on System	Effect on Plant	Remarks
	FCV-72-41 Train B (cont'd)	Isolates RHR spray header B from RHRP B-B discharge	Fails to close, stuck open or spuriously opened.	Mechanical failure Train B power failure; operator error.	Alarm, status monitor anunciator and ind. light in MCR	Reduction of recirc. flow to RCS hot/cold legs and to CCP suction.	None. RHRP A-A can provide required RHRS flow.	Spurious opening during injection mode cannot occur without two failures: 1. operator error or hot short in control wiring, and 2. valve 63-73 limit switch failure or hot short on another cable.
19	FCV-63-1 Train A	Closed to isolate RWST from RCS (shutdown cooling mode)	Fails to close or stuck open.	Mechanical failure; Train A power failure; operator error.	Ind. light in MCR; RHR suction valves from RCS (74-1 and 74-2) cannot be opened from MCR.	RHR suction line from RWST pressurized up to RHRP suction valves 74-3 and 74-21.	RHRS unavailable for shutdown cooling until FCV-63-1 is closed locally by manual action.	Valve is normally open, administratively controlled with power off. Failure to open not listed here because valve is required to be closed for the shutdown cooling and containment spray functions of RHRS. The safety functions and failure modes of this valve for ECCS operation are covered in Tables 6.3-8 and 6.3-9.

Table 5.5-15a Failure Modes And Effects Analysis For Active Failures For The Residual Heat Removal System (Page 24 of 26)

Item No.	Component	Function	Failure Mode	Potential Cause	Method of Detection	Effect on System	Effect on Plant	Remarks
20	Train A Emergency Power	Provides Class 1E diesel-backed power supply to active components of Train A RHR System	Loss of, or inadequate voltage.	Diesel generator failure; bus fault (Train A); operator error.	Alarm and indication in MCR.	Loss of redundancy in RHR containment spray flow (containment spray mode)	None. CSS Train B and RHRS Train B remain available and are adequate to provide spray flow.	
						None. Shutdown cooling can be initiated by opening Train B FCVs 74-2 from the MCR and 74-9 from RMOV board.	None. Shutdown cooling is maintained.	If failure is of Train A 120V Vital AC, which is independent of the 480V power due to battery back-up, neither 74-1 nor 74-2 can be opened. This is because Train A Vital AC power is required for separation relays which control permissive contacts in the opening circuits of both A and B Train Valves. However, in this case, 74-8 and 74-9 can be opened from RMOV boards, since these valves do not have permissive interlocks with 63-1.

Table 5.5-15a Failure Modes And Effects Analysis For Active Failures For The Residual Heat Removal System (Page 25 of 26)

Item No.	Component	Function	Failure Mode	Potential Cause	Method of Detection	Effect on System	Effect on Plant	Remarks
21	Train B Emergency Power	Provides Class 1E diesel-backed power supply to active components of Train B RHR System	Loss of, or inadequate voltage.	Diesel generator failure; bus fault (Train B); operator error.	Alarm and indication in MCR.	Loss of redundancy in RHR containment spray flow (containment spray mode) None. Shutdown cooling can be initiated by opening Train A FCVs, 74-1 from the MCR and 74-8 from RMOV board.	None. CSS Train A and RHRS Train A remain available and are adequate to provide spray flow. None. Shutdown cooling is maintained	
22	Check Valve 72-562	Provides flow path for RHRP A-A discharge to RHR spray header A	Stuck closed	Mechanical falure	Pump motor amps less than full load. Low RHRP A-A flow alarm from FS-74-12A	Loss of redundancy in RHR containment spray	None. RHRP B-B can provide RHR contaiment spray to RHR spray header B	Failure mode is credible. Per IEEE, check valves at PWRs have failure rate (fail to open) of 60 per million demands. Failure of valves to close need not be evaluated since the valve does not have to close to perform its safety function.

Table 5.5-15a Failure Modes And Effects Analysis For Active Failures For The Residual Heat Removal System (Page 26 of 26)

Item No.	Component	Function	Failure Mode	Potential Cause	Method of Detection	Effect on System	Effect on Plant	Remarks
23	Check Valve 72-563	Provides flow path for RHRP B-B discharge to RHR spray header B	Stuck closed	Mechanical failure	Pump motor amps less than full load. Low RHRP B-B flow alarm from FS-74-24A	Loss of redundancy in RHR containment spray	None. RHRP A-A can provide RHR contaiment spray to RHR spray header A	Failure mode is credible. Per IEEE, check valves at PWRs have failure rate (fail to open) of 60 per million demands. Failure of valve to close need not be evaluated since the valve does not have to close to perform its safety function.

Note: The safety functions and failure modes for ECCS operation for the following valves, pumps, etc., are covered in Table 6.3-8: FCV-63-1; FCV-74-3; FCV–74-21; FCV-74-33; FCV-74-35; RHR Pump A-A; RHR Pump B-B; FCV-74-12; FCV-74-24; Check Valves 74-514 and 74-515; FCV-63-93 and FCV–63–94; Train A Emergency Power and Train B Emergency Power.

Table 5.5-15b Failure Modes And Effects Analysis For Passive Failures For The Residual Heat Removal System (Page 1 of 3)

Item No.	Component	Function	Failure Mode	Potential Cause	Method of Detection	Effect on System	Effect on Plant	Remarks
1	Piping and valves on the suction side of one train of RHRS (containmen t spray recirc. mode)	Provides flow path from containment sump to RHRP A-A or RHRP B-B suction.	Leakage.	Mechanical failure (gasket, flange)	Low flow from affected pump; alarm from FS-74-12A or FS-74-24A; Flooding of pump room/pipe chase (pipe break indicator lights - MCR panel or local); Area radiation alarm in pump room; RB sump level decrease (leak outside containment).	Loss of redundancy in RHRS. Loss of sump inventory until isolated. Contamination of pump room or pipe chase from sump water.	None. One RHRP remains available to supply recirc. flow and suction flow to CCPs and SIPs. Both CS pumps remain available to provide containment spray after the RHR suction valve 63-72 or 63-73 is closed to isolate the leak.	The passive failure assumed is 50 gpm for 30 minutes in the Aux. Bldg which will not deplete the sump.

Table 5.5-15b Failure Modes And Effects Analysis For Passive Failures For The Residual Heat Removal System (Page 2 of 3)

Item No.	Component	Function	Failure Mode	Potential Cause	Method of Detection	Effect on System	Effect on Plant	Remarks
2	Piping and valves on RHR pump suction from hot leg #4 (cooldown mode)	Provides flow path from RCS hot leg #4 to RHRP suction.	Leakage a. Upstream of FCV 74-1, 74-2, 74-8, 74-9 b. Downstream of FCV 74-1, 74-2, 74-8, 74-9	Mechanical failure (gasket, flange)	Low flow from operating pump or pumps; alarm from FS 74-12A and/or FS 74-24A; flooding and area radiation alarms in Aux. Bldg; Pressurizer level decrease (may be delayed indication of RCS water solid).	RHRS unavailable for cooldown.	RCS leakage in Mode 4, 5, or 6. Operator action required to isolate leak. Sufficient time and pump capacity are available for accident mitigation.	If a, RHR available for RCS make-up from RWST

Table 5.5-15b Failure Modes And Effects Analysis For Passive Failures For The Residual Heat Removal System (Page 3 of 3)

Item No.	Component	Function	Failure Mode	Potential Cause	Method of Detection	Effect on System	Effect on Plant	Remarks
3	Piping and valves in one train of RHR pump discharge.	Provides flow path from RHRP discharge to RHR spray header (containment spray mode)	Leakage	Mechanical failure (gasket, flange)	Low/high flow depending on location of break relative to flow element. Flooding and area radiation alarms in Aux. Bldg. RB sump level decrease (leak outside containment).	Loss of redundancy in RHR containment spray flow. Loss of sump inventory until isolated. Contamination of pump room and pipe chase by sump water.	None. One RHRP and both CS pumps remain available to provide spray flow.	The passive failure assumed is 50 gpm for 30 minutes in the Aux. Bldg. which will not deplete the sump. The passive failure assumed inside containment has been analyzed and found acceptable.
		Provides flow path from RHR discharge to cold legs (cooldown mode)	Leakage	Mechanical failure (gasket, flange)	Low/high flow depending on location of break relative to flow element. Flooding and area radiation alarms in Aux. Bldg. RB sump level decrease (leak outside containment).	One train of RHRS unavailable for cooldown. Loss of sump inventory until isolated. Contamination of pump room and pipe chase by sump water.	Cooldown may be extended	The passive failure assumed is 50 gpm for 30 minutes in the Aux. Bldg. which will not deplete the sump. The passive failure assumed inside containment has been analyzed and found acceptable.

Table 5.5-16 Reactor Vessel Head Vent System Component Data (Sheet 1 of 1)

Valves

-Solenoid Operated Valves

- 1" Sch. 160S connections
- Active per Regulatory Guide 1.48
- Operating design pressure - 2485 psig
- Operating design temperatures – 650°F
- Code compliance - ASME, Section III, 1977
- Fail closed

-Specific Solenoid Isolation Valve Parameters

- TVA Class B
- Direct open/close stem position indication
- L/D = 340

- Specific Solenoid Throttle Valve Parameter

- TVA Class B
- Independent valve position feedback signal
- Flow characteristics:

FLOW RATE	ΔP FLOW	TEMP FLOW	INLET PRESS
50 GPM	900 PSI	550°F	1100 PSIG
10 GPM	2300 PSI	550°F	2300 PSIG
50,000 SCFH N2	1400 PSI	550°F	1500 PSIG

Piping

- 1" Sch. 160S
- Code compliance ASME, Section III, 1977, Class 2

THIS PAGE INTENTIONALLY BLANK

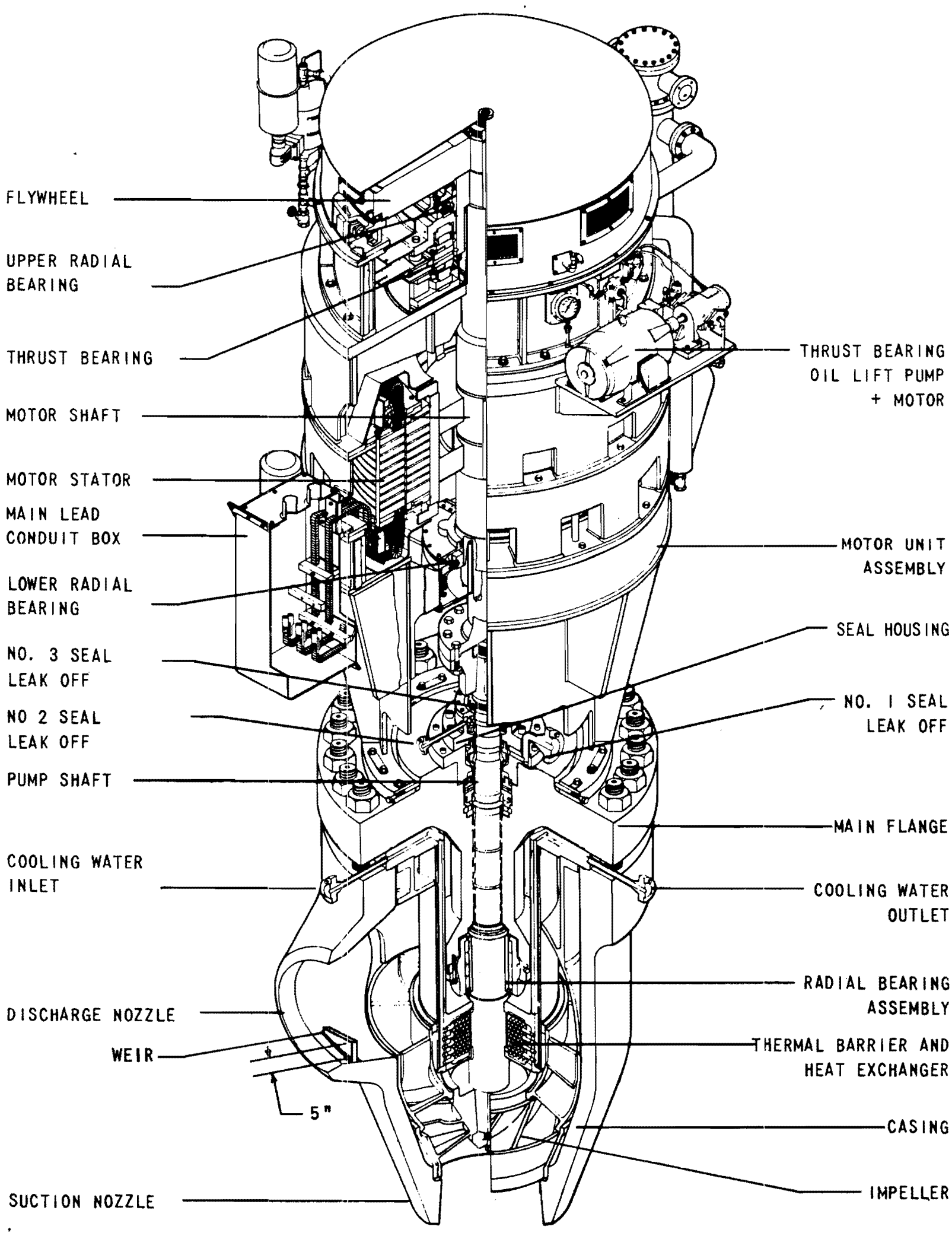

Figure 5.5-1 Reactor Coolant Controlled Leakage Pump

Figure 5.5-1 Reactor Coolant Controlled Leakage Pump

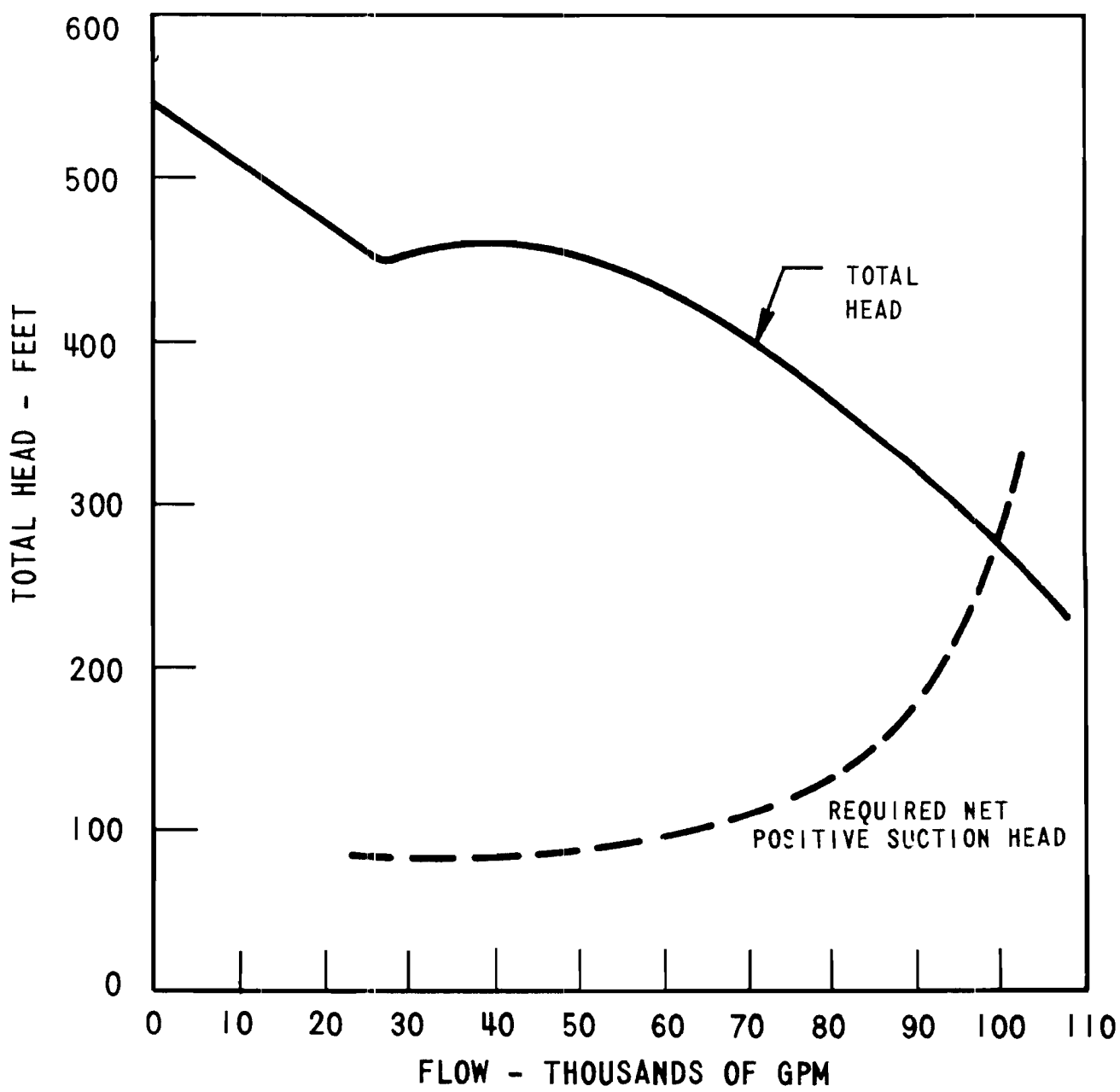

Figure 5.5-2. Reactor Coolant Pump Estimated Performance Characteristic

Figure 5.5-2 Reactor Coolant Pump Estimated Performance Characteristic

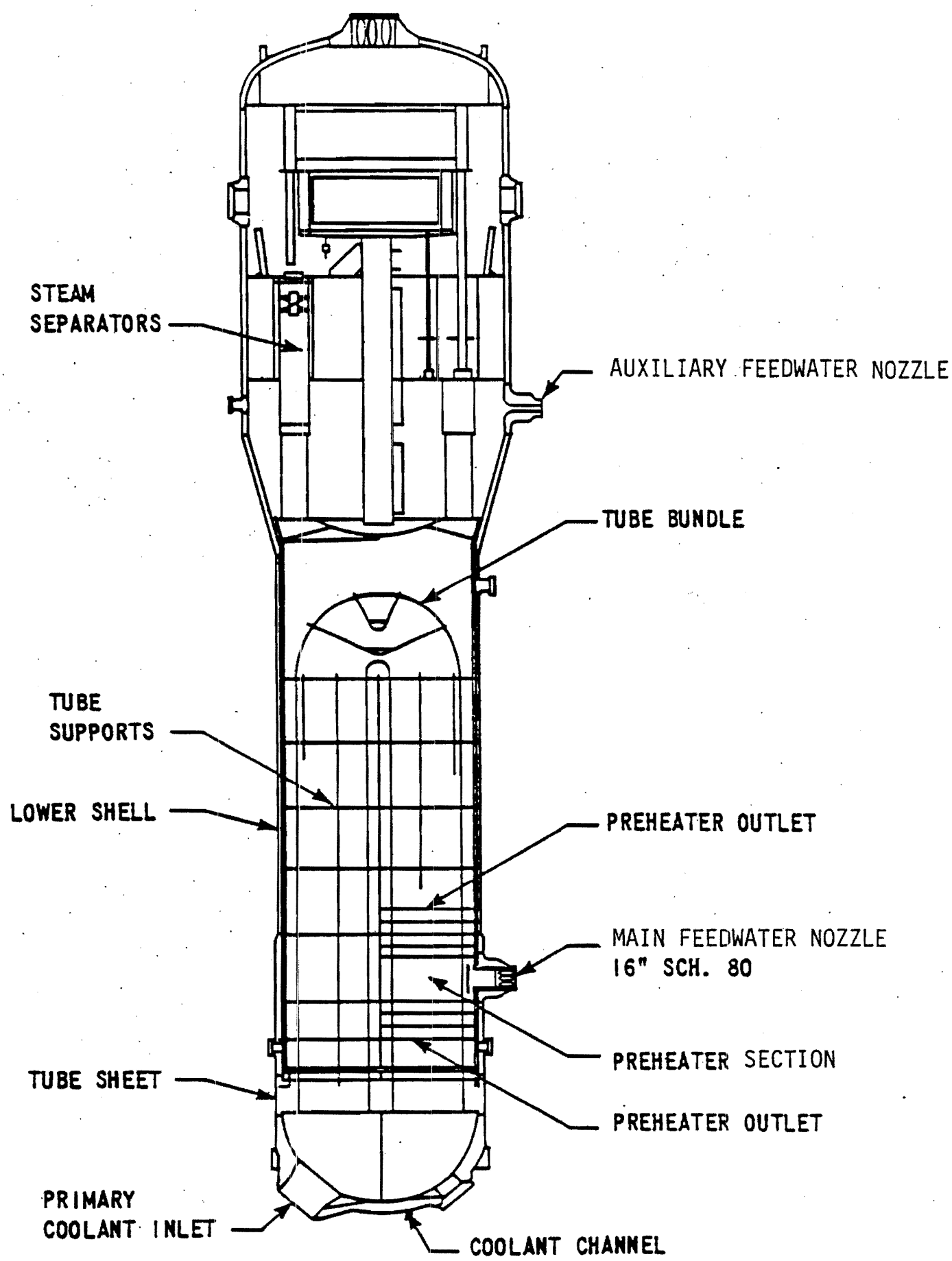

Figure 5.5-3 Unit 2 Steam Generator

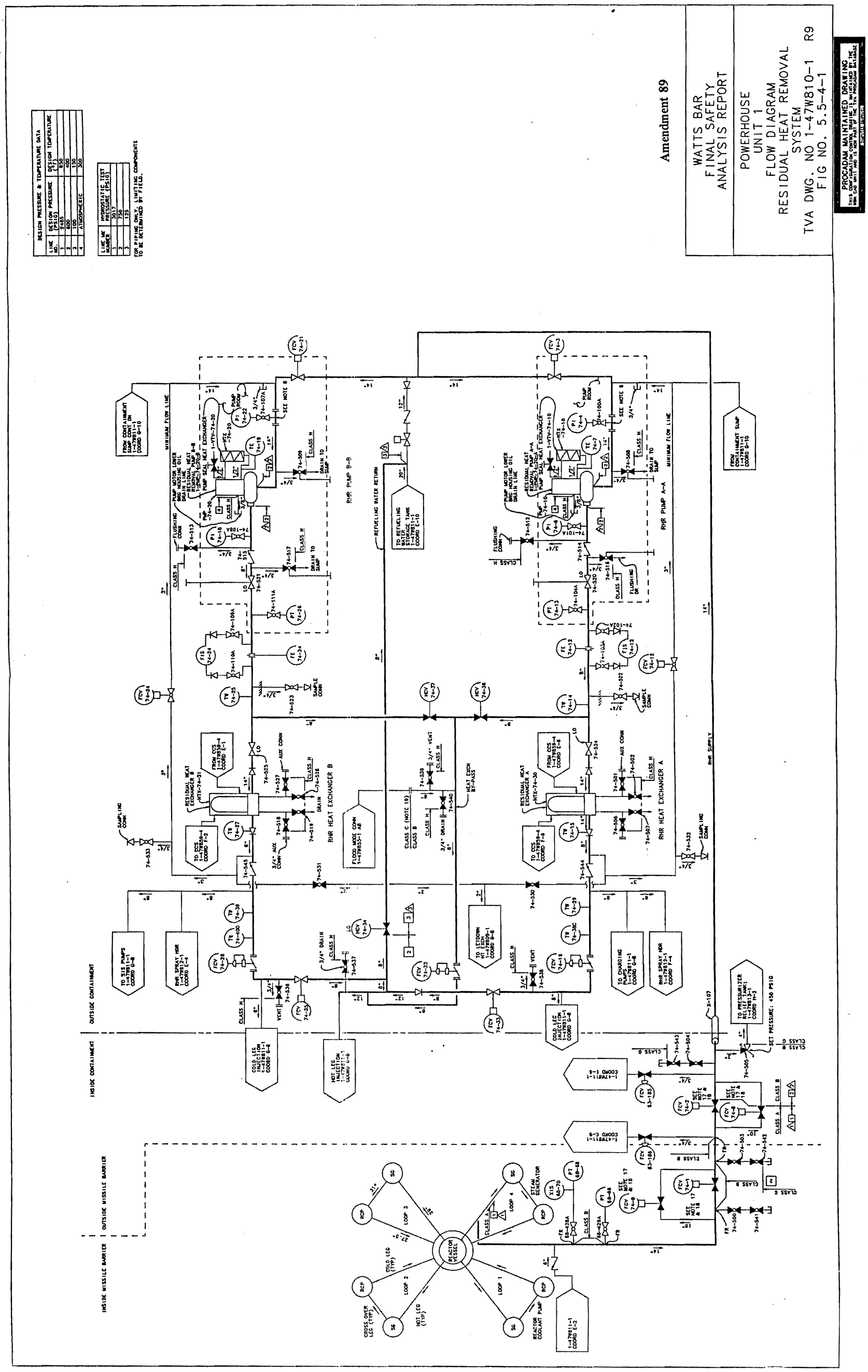

Figure 5.5-4-1 Powerhouse Units 1 & 2 - Flow Diagram - Residual Heat Removal System

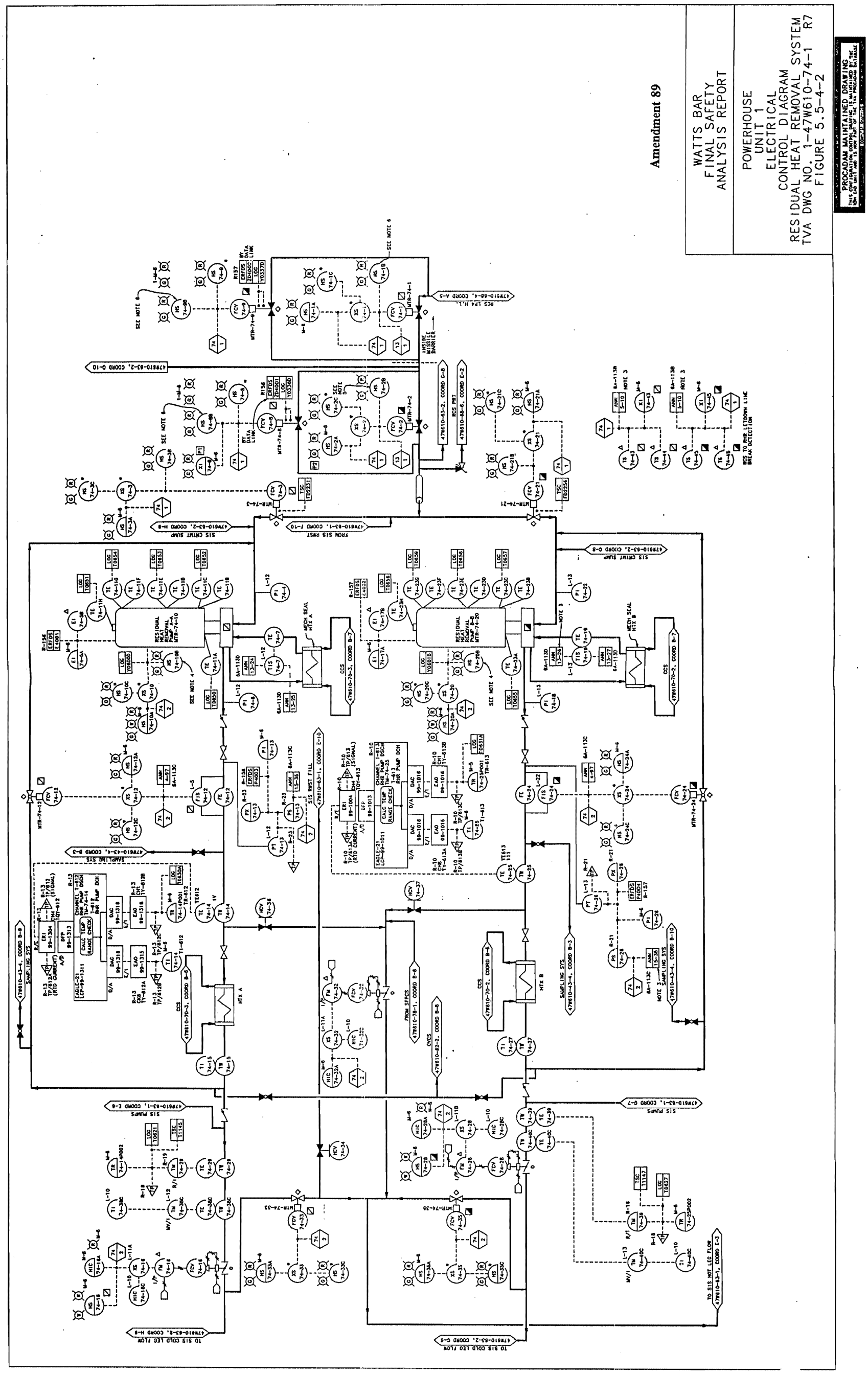

Figure 5.5-4-2 Powerhouse Unit 1 - Electrical Control Diagram - Residual Heat Removal System

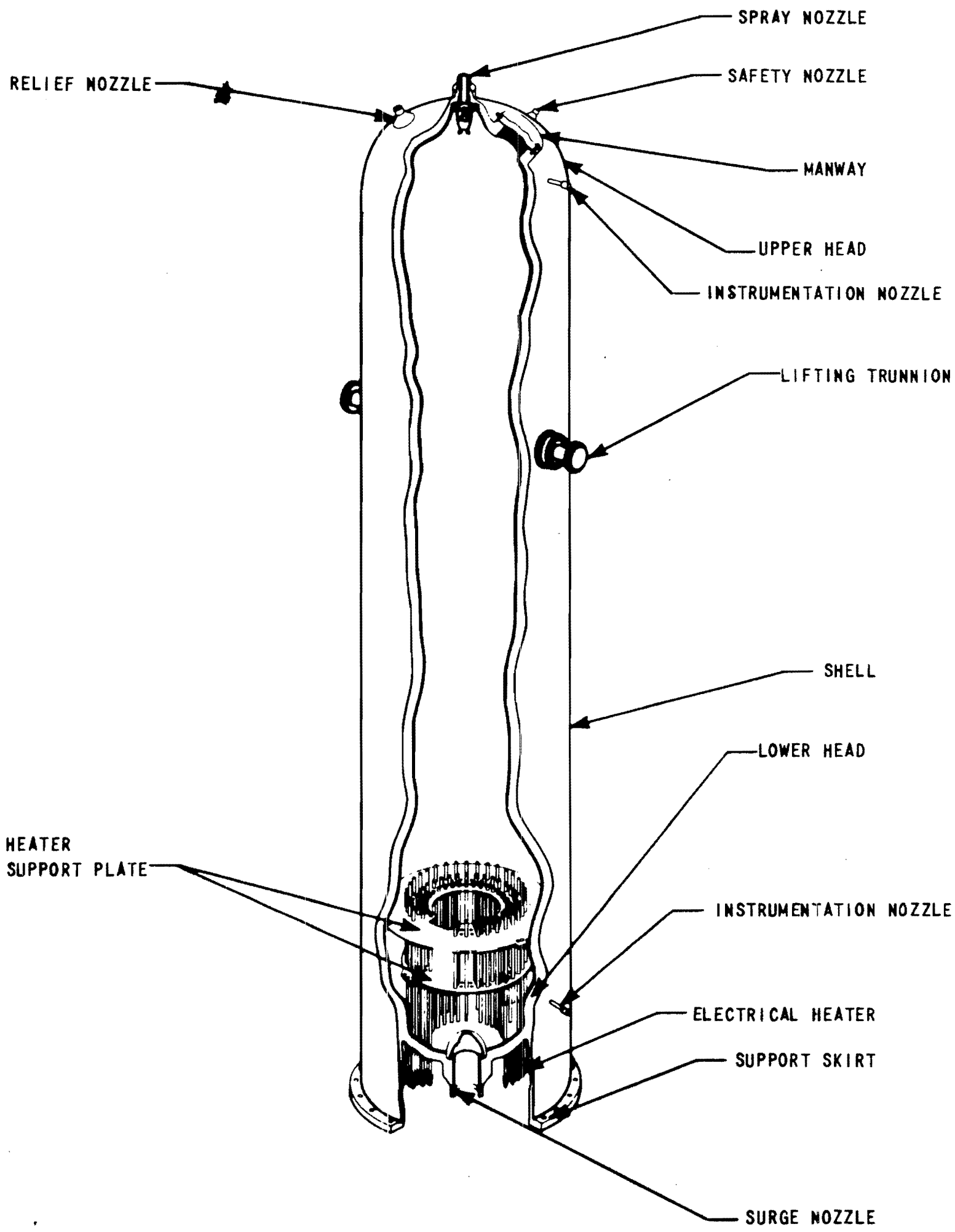

Figure 5.5-5, Pressurizer

Figure 5.5-5 Pressurizer

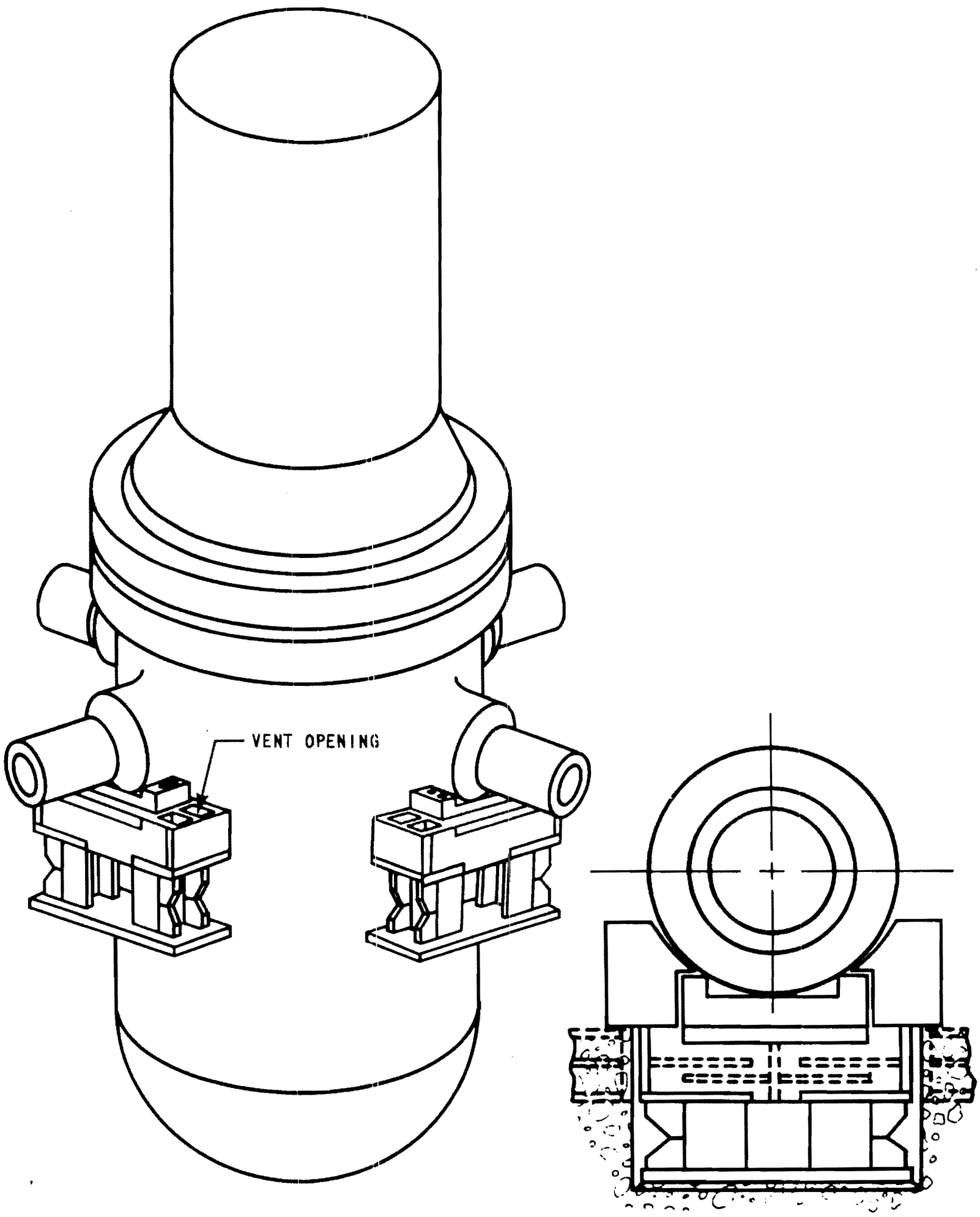

Figure 5.5-6 Reactor Vessel Supports

Figure 5.5-6 Reactor Vessel Supports

3842-8

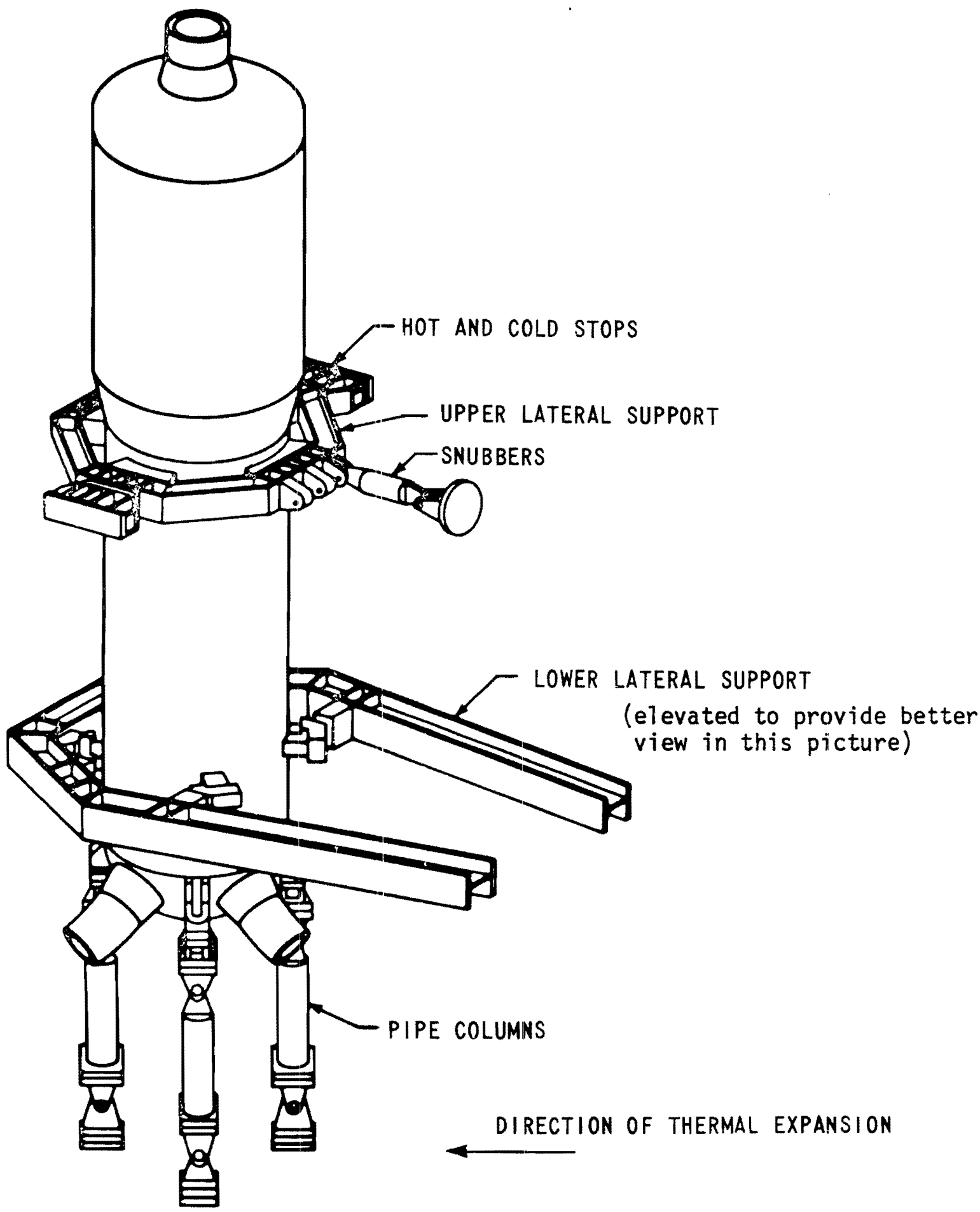

Figure 5.5-7 Ice Condenser Steam Generator Supports

Figure 5.5-7 Ice Condenser Steam Generator Supports

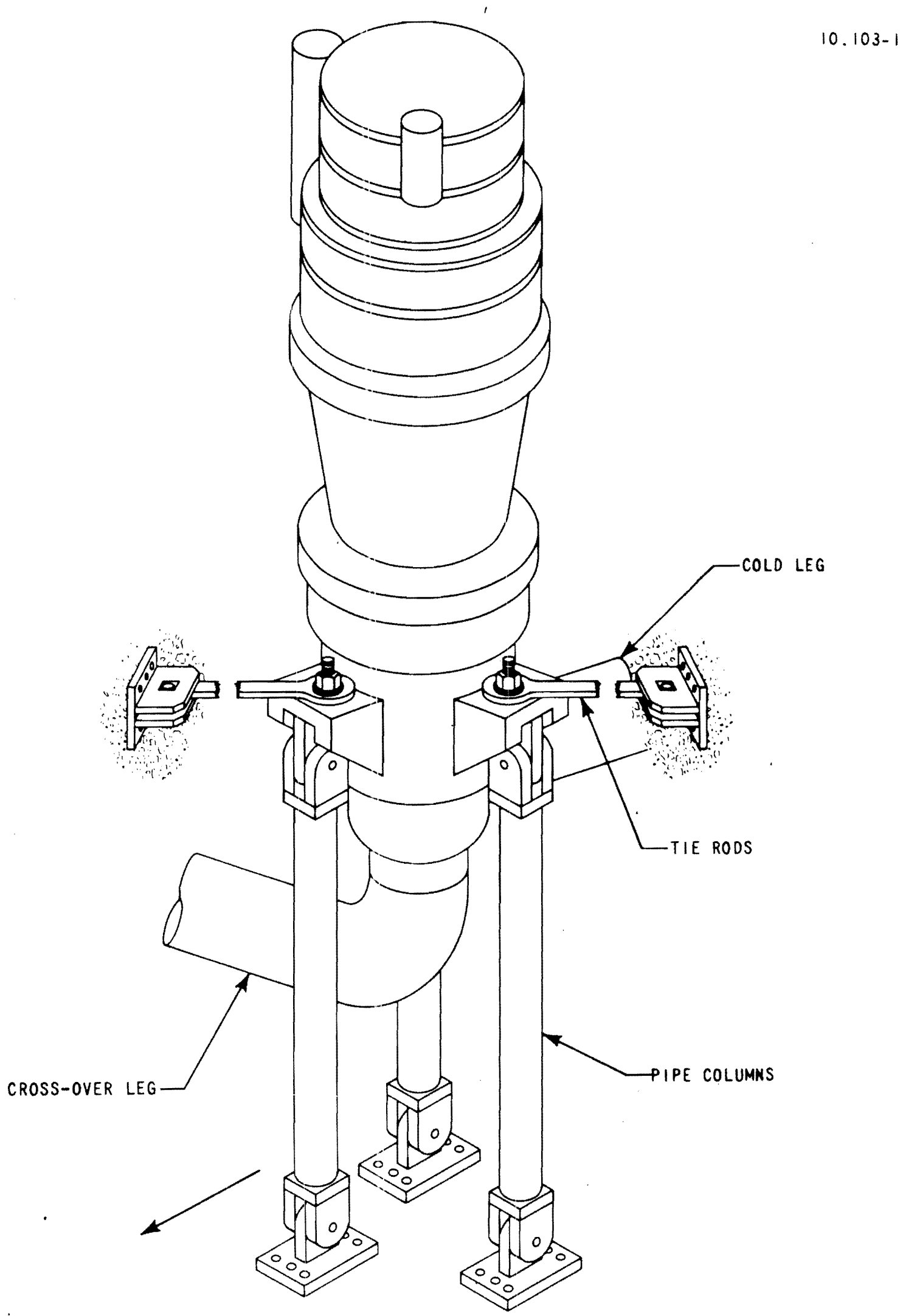

Figure 5.5-8. Reactor Coolant Pump Supports.

Figure 5.5-8 Reactor Coolant Pump Supports

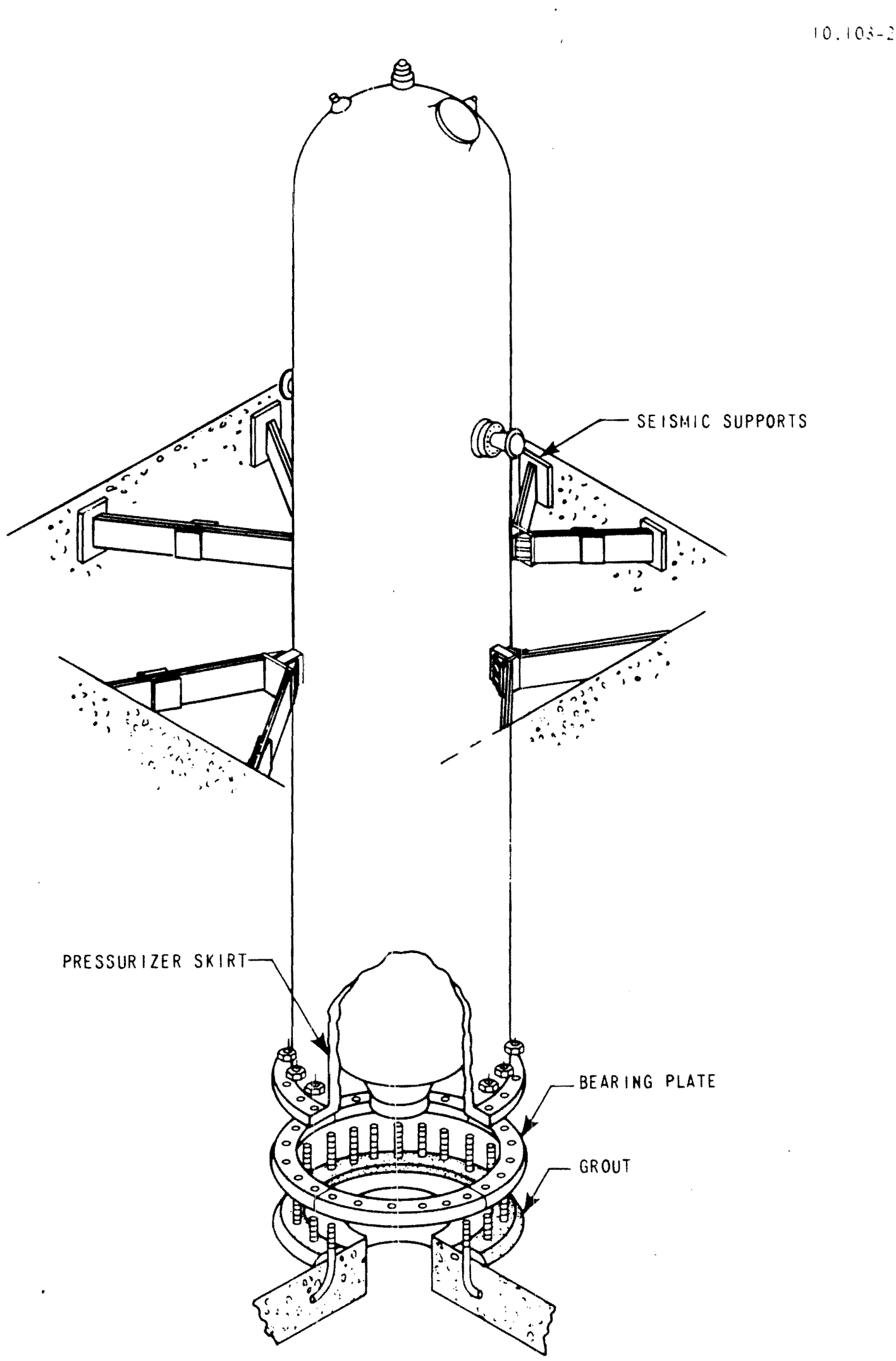

Figure 5.5-9. Pressurizer Supports

Figure 5.5-9 Pressurizer Supports

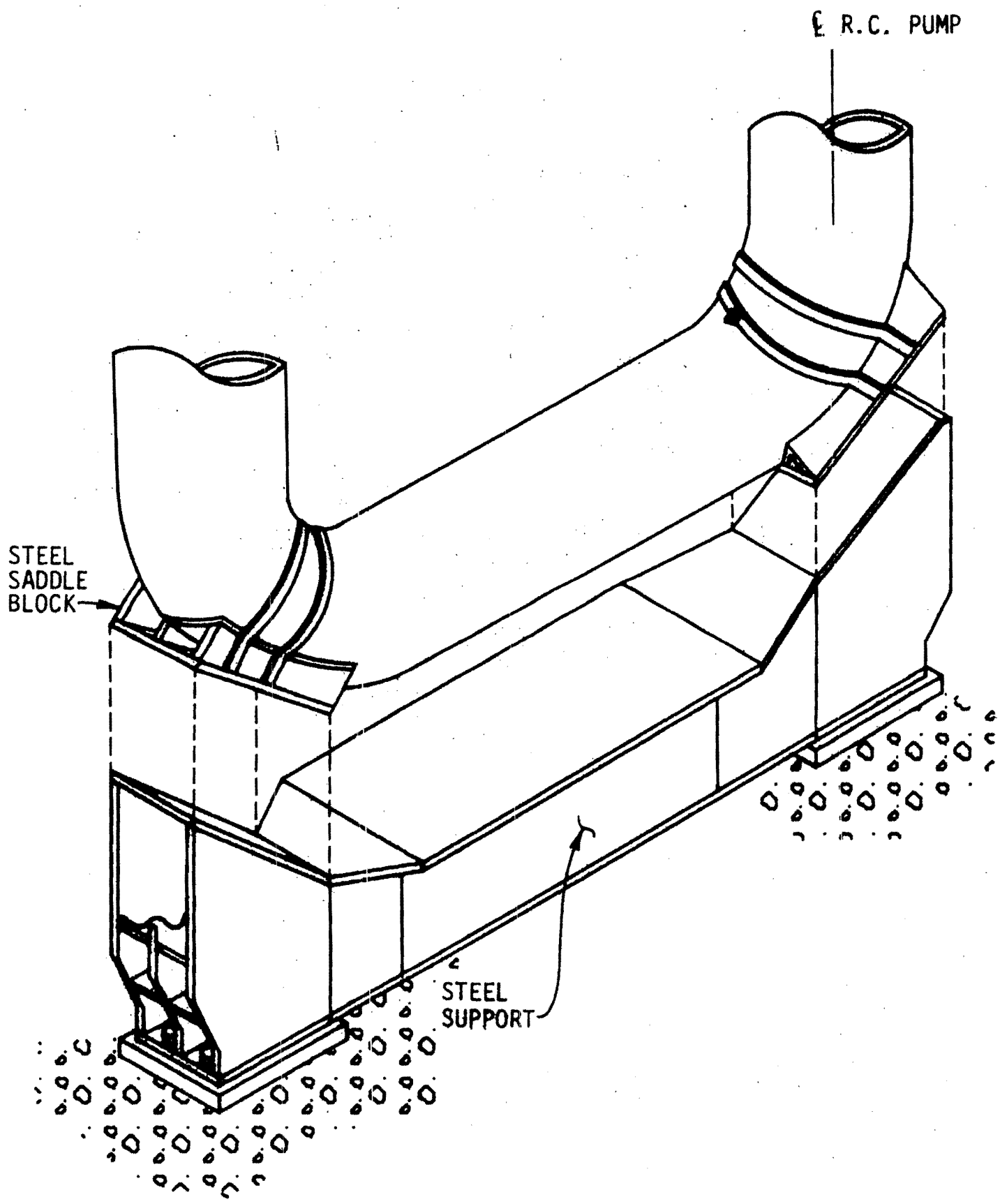

FIGURE 5.5-10
CROSSOVER LEG RESTRAINTS

Revised by Amendment 52

Figure 5.5-10 Crossover Leg Restraints

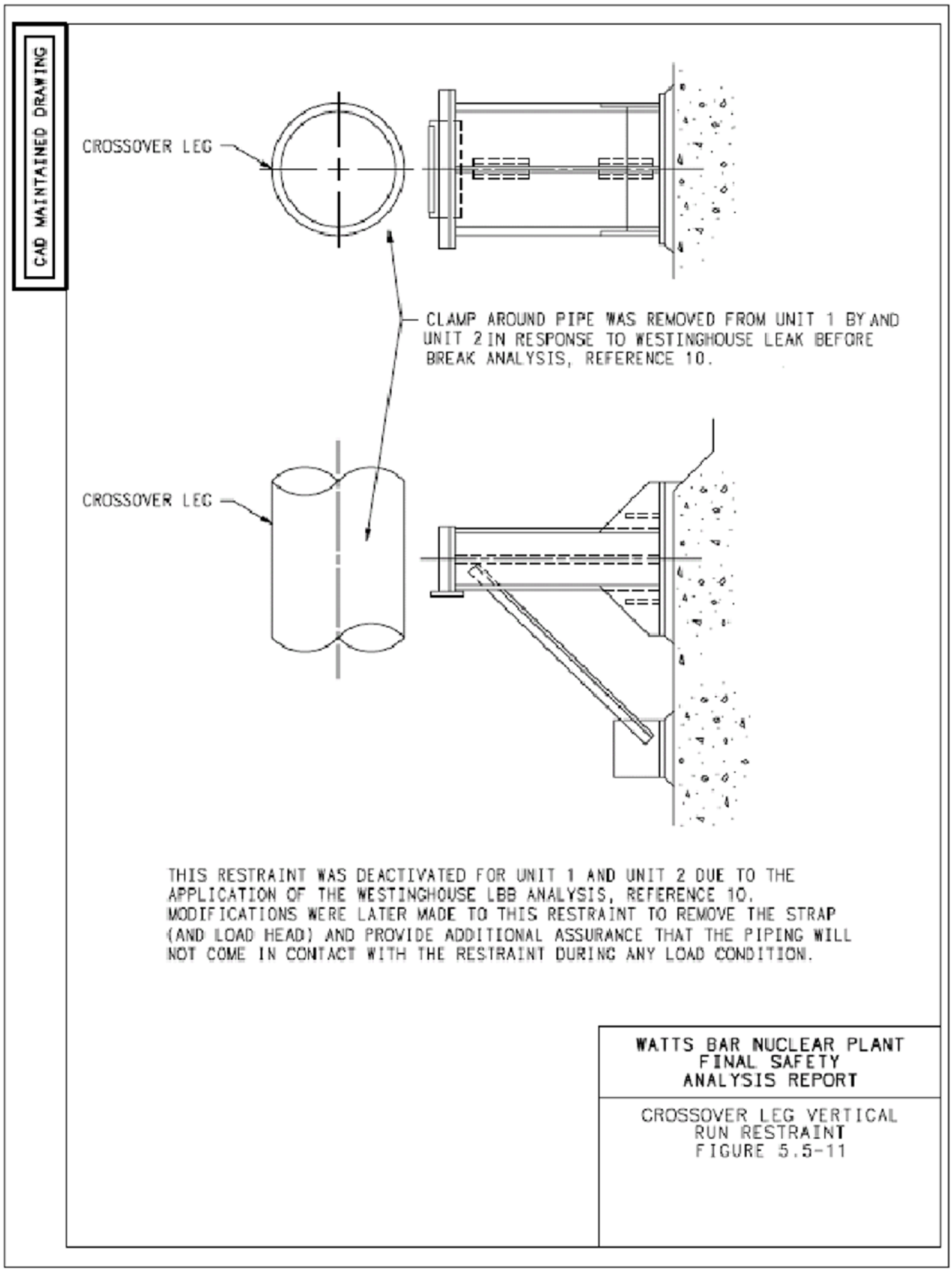

Figure 5.5-11 Crossover Leg Vertical Run Restraint

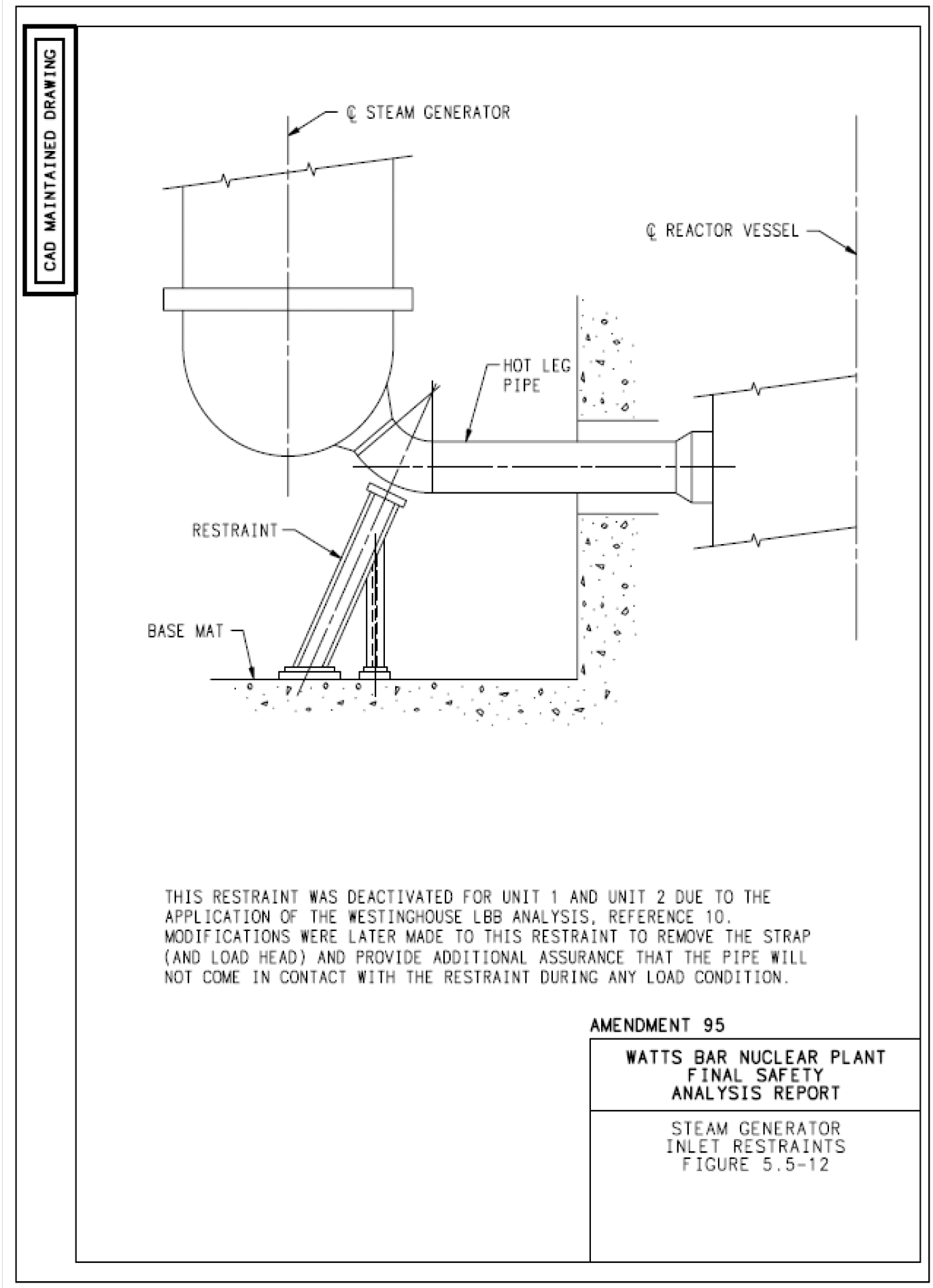

Figure 5.5-12 Steam Generator Inlet Restraints

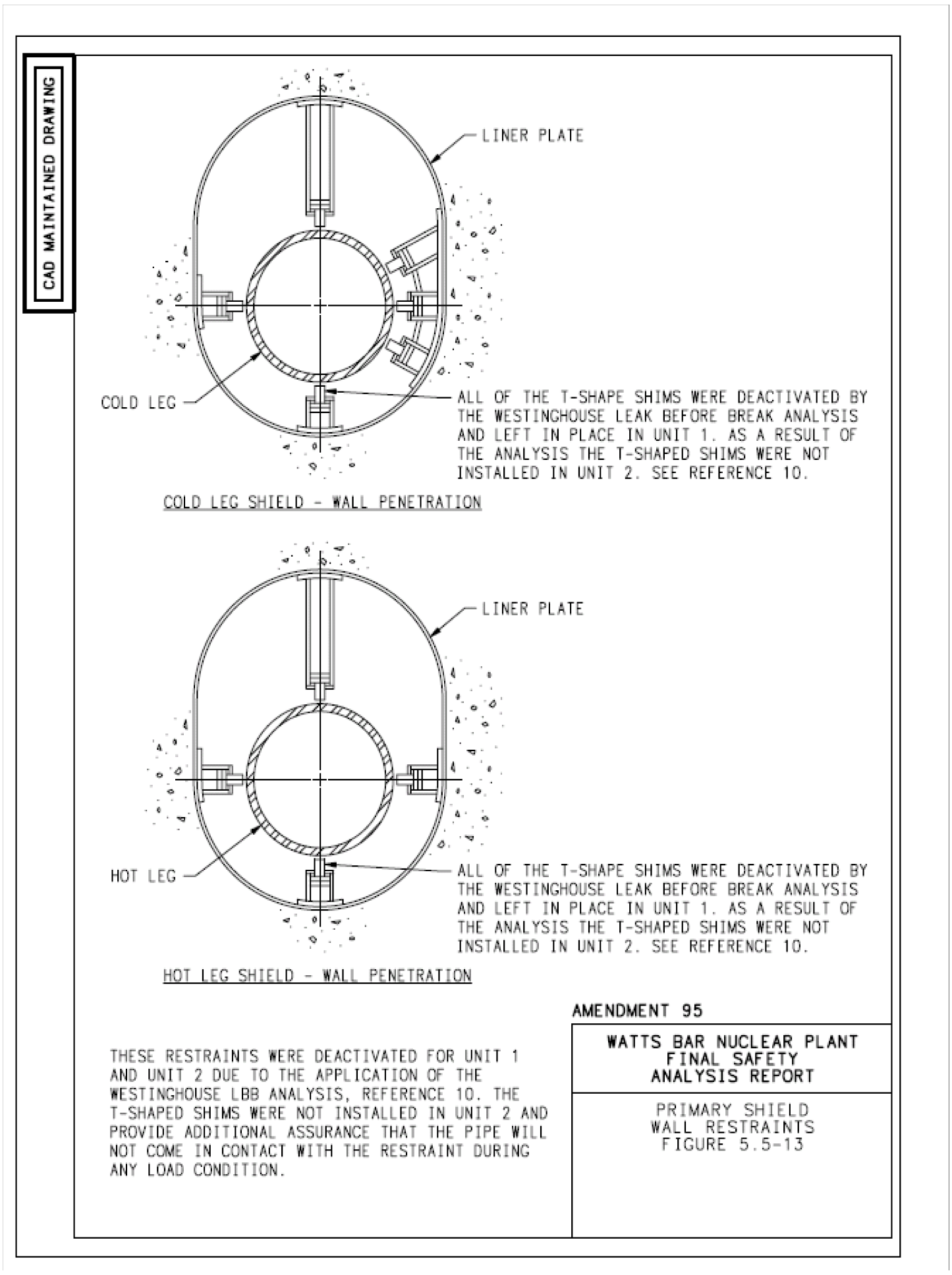

Figure 5.5-13 Primary Shield -Wall Restraints

5.6 INSTRUMENTATION APPLICATION

Process control instrumentation is provided for the purpose of acquiring data on the pressurizer and on a per loop basis for the key process parameters of the Reactor Coolant System (RCS) (including the reactor coolant pump motors) as well as for the Residual Heat Removal System (RHRS). The pick-off points and instrumentation are shown on the flow and control diagrams of the RCS (Figure 5.1-1-1) and the RHRS (Figure 5.5-4-1). In addition to providing input signals for the protection system and the plant control systems, the instrumentation sensors furnish input signals for monitoring and/or alarming purposes for the following parameters:

(1) Temperatures

(2) Flows

(3) Pressures

(4) Liquid Levels

In general these input signals are used for the following purposes:

(1) Provide input to the Reactor Trip System for reactor trips.

See Section 7.2.1.1.2 for conditions which automatically open the reactor trip breakers.

See Section 7.2.1.2.2 for variables used to provide reactor trips.

(2) Provide input to the engineered safety features actuation system.

See Section 7.3.1.2.2 for variable used for automatic initiation of safety injection.

(3) Furnish input signals to non-safety related systems, such as the plant control systems and surveillance circuits so that:

(a) Reactor coolant average temperature (T_{avg}) will be maintained within prescribed limits (See Section 7.7.1.1). The Resistance Temperature Detector (RTD) instrumentation is identified on Figure 5.1-1-1.

(b) Pressurizer water level control, using T_{avg} to program the setpoint, will maintain the coolant level within prescribed limits (See Section 7.7.1.6).

(c) Pressurizer pressure will be controlled within specified limits (See Section 7.7.1.5).

(d) Steam dump control, using T_{avg}, will accommodate sudden loss of generator load (See Section 7.7.1.8).

(e) Information is furnished to the control room operator and at local stations for monitoring.

The following is a functional description of the system instrumentation. Unless otherwise stated, all indicators, recorders and alarm annunciators are located in the plant control room.

(1) Temperature Measuring Instrumentation

(a) Narrow Range RCS Loop Temperature

Thermowell-mounted RTDs are used in the RCS hot leg and cold legs to provide narrow-range temperature information for use by the protection system and the plant control systems. A total of five thermowells/ RTDs are installed in each RCS loop. The temperature of the RCS varies across the cross section of the hot leg. Three active thermowell/RTDs are installed 120° apart around each hot leg pipe to accommodate this spatial variation.The output signals of the three RTDs are filtered and averaged electronically to produce a single signal for each loop representative of the average hot leg temperature.

Two active thermowell/RTDs are installed downstream of the reactor coolant pump to measure the cold leg temperature. The output signals of these two RTDs are filtered and averaged electronically to produce a single signal for each loop representative of the average cold leg temperature. Because of the mixing action provided by the pump, a single sensor for each loop is sufficient to obtain the average cold leg temperature, should one RTD fail. The protection system electronically performs the hot and cold leg averaging as well as computing the RCS delta temperature (ΔT) and RCS average temperature (T_{avg}). The ΔT and T_{avg} for each loop are displayed on the main control board.

(b) Wide Range RCS Loop

Temperature detectors, located in the thermowells in the cold and hot leg piping of each loop, supply signals to wide-range temperature recorders and indicators. This information is used by the operator to control coolant temperature during startup and shutdown.

(c) Pressurizer Temperature

There are two temperature detectors in the pressurizer, one in the steam phase and one in the water phase. Both detectors supply signals to temperature indicators and high-temperature alarms. The steam phase detector, located near the top of the vessel, is used during startup to determine water temperature when the pressurizer is completely filled with water. The water phase detector, located at an elevation near the center of the heaters, is used during cooldown when the steam phase detector response is slow due to poor heat transfer.

(d) Surge Line Temperature

This detector supplies a signal for a temperature indicator and a low-temperature alarm. Low temperature is an indication that the continuous spray rate is too small.

(e) Safety and Relief Valve Discharge Temperatures

Temperatures in the pressurizer safety and relief valve discharge lines are measured and indicated. An increase in a discharge line temperature is an indication of leakage through the associated valve.

(f) Spray Line Temperatures

Temperatures in the spray lines from two loops are measured and indicated. Alarms from these signals are actuated by low spray water temperature. Alarm conditions indicate insufficient flow in the spray lines.

(g) Pressurizer Relief Tank Water Temperature

The temperature of the water in the pressurizer relief tank is indicated, and an alarm actuated by high temperature informs the operator that cooling of the tank contents is required.

(h) Reactor Vessel Flange Leakoff Temperature

The temperature in the leakoff line from the reactor vessel flange O-ring seal leakage monitor connections is indicated. An increase in temperature above ambient is an indication of O-ring seal leakage. High temperature actuates an alarm.

(i) Reactor Coolant Pump Motor Temperature Instrumentation

(1) Thrust Bearing Upper and Lower Shoes Temperature:

Resistance temperature detectors are provided with one located in the shoe of the upper and one in the shoe of the lower thrust bearing. Monitoring of these detectors is provided by the plant computer which actuates a high temperature alarm at the computer.

(2) Stator Winding Temperature:

The stator windings contain six resistance-temperature detectors, two per phase, imbedded in the windings. A high temperature sensed by the plant computer on a monitored detector will actuate a high temperature alarm in the Main Control Room.

(3) Upper and Lower Bearing Temperature:

Resistance temperature detectors are located one in the upper and one in the lower radial bearings. Monitoring of these detectors is provided by the plant computer which actuates a high temperature alarm at the computer.

(j) Incore Instrumentation Thimble Assembly (IITA) Thermocouple Temperature

Unit 2 Only

Incore temperature is monitored by 58 thermocouples positioned at the tip of the IITA just below the bottom of the fuel assembly top nozzle to measure fuel assembly coolant outlet temperatures at preselected positions in each quadrant. The representative individual, and maximum value per quadrant of thermocouple temperature readings are available for display on the Common Q Flat Panel display in the main control room. The plant computer is also available as a display.

(k) Subcooling Margin Monitor

Unit 2 Only

To continuously monitor temperature margins to saturation of the primary coolant system, RCS wide-range pressure input, representative core exit thermocouple temperature and RCS hot-leg temperature are provided as input to the Common Q Post Accident Monitoring System (CQ PAMS). The CQ PAMS controller provides an output to the digital subcooling margin temperature meters on the main control board to provide a means to read subcooling margin temperature corresponding to RCS pressure from 0-3000 psig. The CQ PAMS controller also provides data to the CQ PAMS Flat Panel display. Subcooling margin is also available on the plant computer.

(2) Flow Indication

(a) Reactor Coolant Loop Flow

Flow in each reactor coolant loop is monitored by three differential pressure measurements at a piping elbow tap in each reactor coolant loop. Flow indicators are provided on the control board. Refer to Section 7.2.2 for additional information on coolant flow measurements.

(3) Pressure Indication

(a) Pressurizer Pressure

Pressurizer pressure transmitters provide signals for individual indicators in the control room, actuation of both a low pressure trip and a high pressure trip, initiation of low pressurizer pressure safety injection, and pressurizer pressure control. Pressurizer pressure is recorded in the main control room.

See Section 7.7.1.5 for a description of the pressurizer pressure control system.

See Section 7.2.2.3.3 for control and protection interaction.

See Sections 7.2.1.1.2, Item 3.a and Item 3.b, respectively, for pressurizer low pressure and pressurizer high pressure reactor trips.

See Table 7.3-1 for low pressurizer pressure safety injection.

(b) Reactor Coolant Loop Pressures

Five wide-range pressure transmitters are provided to monitor the RCS hot leg pressure. Three of the five transmitters are required for Post Accident Monitoring (PAM) and are connected to the first, third, and fourth RCS loops, respectively. The PAM transmitters that are connected to RCS loops one and three, share sensing lines with the Reactor Vessel Level Instrumentation System (RVLIS), while the third PAM transmitter shares its sensing line with another transmitter that is connected to the fourth RCS loop. All three PAM RCS pressure transmitters are located outside containment to help reduce the effects of a reactor building accident on their operation.

The PAM transmitters provide signals to separate indicators and to a recorder in the Main Control Room. The three PAM RCS indicators provide pressure indication over the full operating range. The other two transmitters are located inside containment and are also connected to the fourth RCS loop. These are also wide-range transmitters which provide pressure indication over the full operating range. The recorder, together with the indicators, serve as a guide to the operator for manual pressurizer heater and spray control and letdown to the Chemical and Volume Control System (CVCS) during plant startup and shutdown. An amplified signal from the lower portion of the range of one of the channels is indicated to provide improved legibility at the lower pressures.

Additionally, two of the PAM wide-range pressure transmitters also provide the permissive signals for the RHR loop suction line isolation valve interlock circuit.

There are also two local maximum pressure gages for operator reference during the shutdown condition located in two of the hot loops. These gauges are equipped with auxiliary pointers which remain at the maximum pressure measured until reset locally.

(c) Pressurizer Relief Tank Pressure

The pressurizer relief tank pressure transmitter provides a signal to isolate the tank from the waste processing system vent header when the pressure relief tank pressure exceeds a setpoint to prevent over pressurizing the vent header.

(d) Reactor Coolant Pump Oil Lift Pressure

A dual pressure switch is provided on the high pressure oil lift system. Upon low oil pressure the switch will actuate an alarm on the main control board. In addition, the switch is part of an interlock system that will prevent starting of the Reactor Coolant Pump Motor until the oil lift pump develops the required pressure.

(4) Liquid Level Indication

(a) Pressurizer Water Level

Three pressurizer water level transmitters provide signals for individual indicators in the main control room, actuation of a high water level reactor trip, and pressurizer level control. Pressurizer level is also recorded in the main control room. An alarm is actuated by high or low water level or deviation from programmed level. For additional detail on pressurizer water level functions, refer to Sections 7.2.1.1.2, 7.2.1.1.5, 7.2.2.3.4, and 7.7.1.6.

(b) Pressurizer Relief Tank Water Level

The pressurizer relief tank water level transmitter provides a signal to a level indicator in the control room. High or low water level activates an alarm.

(c) Reactor Vessel Water Level

Reactor vessel water level indication in percent level or percent liquid content (density) is based on inputs from reactor vessel water level transmitters, and compensated by inputs from capillary line strap on RTDs, RCS wide range pressure, RCS wide range temperature and RCP status.

(d) Reactor Coolant Pump Motor Oil Reservoir Liquid Level

Level switches provided in the upper and lower bearing oil reservoirs will actuate a high/low level alarm on the main control board.

(5) RHR Control Instrumentation

The RHRS instrumentation furnishes input signals for control purposes for the following:

(a) Control valve in each residual heat removal pump bypass line which opens at flows below a preset limit and closes at flows above a preset limit. See Section 5.5.7 for a detailed description.

(b) RHR inlet valves control circuitry. See Section 7.6 for the description of the interlocks.

(c) Control valves in the RHR heat exchanger outlet and bypass line to control temperature of reactor coolant returning to reactor coolant loops during plant cooldown. See Section 5.5.7 for a detailed description.

(d) RHR pump circuitry for starting RHR pumps on safety injection signal. See Section 7.3 for details.

REFERENCES

None

THIS PAGE INTENTIONALLY BLANK