DOE/EM-0142P

# Decommissioning Handbook

March 1994

**U.S. Department of Energy**
**Office of Environmental Restoration**

# DISCLAIMER

This report was prepared as an account of work sponsored by an agency of the United States Government. Neither the United States Government nor any agency thereof, nor any of their employees, makes any warranty, express or implied, or assumes any legal liability or responsibility for the accuracy, completeness, or usefulness of any information, apparatus, product, or process disclosed, or represents that its use would not infringe privately owned rights. Reference herein to any specific commercial product, process, or service by trade name, trademark, manufacturer, or otherwise does not necessarily constitute or imply its endorsement, recommendation, or favoring by the United States Government or any agency thereof. The views and opinions of authors expressed herein do not necessarily state or reflect those of the United States Government or any agency thereof.

**This report has been reproduced directly from the best available copy.**

**Available to DOE and DOE Contractors from the Office of Scientific and Technical Information, P.O. Box 62, Oak Ridge, TN 37831; prices available from (615) 576-8401.**

**Available to the public from the U.S. Department of Commerce, Technology Administration, National Technical Information Service, Springfield, VA 22161, (703) 487-4650.**

Printed with soy ink on recycled paper

## ACKNOWLEDGEMENTS

The Department of Energy wishes to acknowledge ENSERCH Environmental Corporation for the preparation of this revision to the Decommissioning Handbook and the following organizations that participated with technical contributions and/or reviews:

Argonne National Laboratory
Battelle-MACTEC
Battelle-PNL
Bechtel
Bergmann USA
Demolition Technologies
EG&G Idaho
EG&G Mound Applied Technologies
Entropic Systems
Gamma-Metrics
International Technologies
Kaiser Engineers Hanford
Kleiber & Schulz
KMI Services Inc.
Los Alamos National Laboratory
Martin Marietta Energy Systems
Nuclear Energy Services, Inc.
NUS Corporation
Pajarito Scientific Company
PENTEK
Princeton Plasma Physics Laboratory
Radiation Monitoring Devices
RAPIC
Raytheon
Retech
RUST Geotech
Scientific Ecology Group
TLG Engineering, Inc.
TMS/Eberline
Varian Industrial Technologies
Westinghouse Hanford
Westinghouse Savannah River Company

# CONTENTS

FIGURES . . . . . xvi

TABLES . . . . . xxii

ACRONYMS AND ABBREVIATIONS . . . . . xxiv

EXECUTIVE SUMMARY . . . . . xxxi

1.0 INTRODUCTION . . . . . 1-1
- 1.1 Handbook Purpose . . . . . 1-1
- 1.2 Handbook Background . . . . . 1-2
- 1.3 Handbook Organization . . . . . 1-3

2.0 OPERATIONAL AND PREDECOMMISSIONING ACTIVITIES . . . . . 2-1
- 2.1 Facility Design . . . . . 2-1
- 2.2 Normal Operations . . . . . 2-2
  - 2.2.1 Maintenance . . . . . 2-2
  - 2.2.2 Periodic Shutdown . . . . . 2-3
- 2.3 Safe Shutdown . . . . . 2-3
- 2.4 Surveillance and Maintenance . . . . . 2-4
- 2.5 Conclusion . . . . . 2-4
- 2.6 References . . . . . 2-5

3.0 DECOMMISSIONING PROJECT . . . . . 3-1
- 3.1 Decommissioning Overview . . . . . 3-1
  - 3.1.1 Decommissioning Alternatives . . . . . 3-2
  - 3.1.2 Decommissioning Objectives . . . . . 3-3
- 3.2 Project Overview . . . . . 3-4
  - 3.2.1 Assessment . . . . . 3-4
  - 3.2.2 Development . . . . . 3-5
  - 3.2.3 Operations . . . . . 3-5
  - 3.2.4 Closeout . . . . . 3-5
- 3.3 Assessment Phase . . . . . 3-5
  - 3.3.1 Regulations Supporting Assessment . . . . . 3-5
  - 3.3.2 Land Use Considerations . . . . . 3-6
  - 3.3.3 Other Concerns . . . . . 3-6
    - 3.3.3.1 Financial Concerns . . . . . 3-6
    - 3.3.3.2 Disposal Availability . . . . . 3-6
    - 3.3.3.3 Public Involvement . . . . . 3-6
    - 3.3.3.4 Technology Development . . . . . 3-6
    - 3.3.3.5 Risk Assessments . . . . . 3-7

**CONTENTS**
**(Continued)**


3.3.4 Evaluation of Alternatives . . . . . 3-7
3.4 Development Phase . . . . . 3-8
3.4.1 Decommissioning Engineering . . . . . 3-9
3.4.1.1 Detailed Engineering . . . . . 3-9
3.4.1.2 Cost Estimating . . . . . 3-10
3.4.1.3 Scheduling . . . . . 3-10
3.4.2 Preparation for Decommissioning Operations . . . . . 3-10
3.4.2.1 Coordination . . . . . 3-10
3.4.2.2 Documentation . . . . . 3-11
3.4.2.3 Public Relations . . . . . 3-12
3.4.2.4 Safeguards and Security . . . . . 3-12
3.4.3 Management . . . . . 3-13
3.4.4 Decommissioning Plan Preparation . . . . . 3-14
3.5 Operations Phase . . . . . 3-15
3.6 Closeout Phase . . . . . 3-16
3.7 Conclusion . . . . . 3-17
3.8 References . . . . . 3-18

4.0 DECOMMISSIONING PLAN . . . . . 4-1
4.1 Introduction . . . . . 4-1
4.2 Elements of a Decommissioning Plan . . . . . 4-2
4.2.1 Introduction . . . . . 4-2
4.2.2 Facility History, Characterization, and Status . . . . . 4-2
4.2.3 Alternative Selection . . . . . 4-3
4.2.4 Decommissioning Activities . . . . . 4-3
4.2.5 Program Management . . . . . 4-4
4.2.5.1 Organization . . . . . 4-4
4.2.5.2 Cost . . . . . 4-5
4.2.5.3 Schedules . . . . . 4-6
4.2.6 Worker and Environmental Protection . . . . . 4-6
4.2.6.1 Health Physics Program . . . . . 4-6
4.2.6.2 ALARA Practices . . . . . 4-7
4.2.7 Waste Management . . . . . 4-7
4.2.8 Final Survey Plan . . . . . 4-8
4.3 Conclusion . . . . . 4-8
4.4 References . . . . . 4-9

# CONTENTS
## (Continued)


5.0 LEGISLATIVE AND REGULATORY REQUIREMENTS AND OTHER APPLICABLE GUIDANCE . . . . . 5-1
- 5.1 U.S. Department of Energy-Controlled Nuclear Facilities . . . . . 5-1
- 5.2 Commercial Nuclear Facilities . . . . . 5-5
  - 5.2.1 U.S. Nuclear Regulatory Commission Regulations . . . . . 5-5
  - 5.2.2 Low-Level Radioactive Waste Policy Act and Amendments . . . . . 5-7
  - 5.2.3 Nuclear Waste Policy Act and Amendments . . . . . 5-7
  - 5.2.4 Criteria for the Release of the Site and Materials from the Site . . . 5-8
  - 5.2.5 Nuclear Facilities Regulated by States and Local Governments . . . . 5-8
- 5.3 U.S. Environmental Protection Agency . . . . . 5-8
  - 5.3.1 Clean Air Act . . . . . 5-8
  - 5.3.2 Clean Water Act . . . . . 5-9
  - 5.3.3 Safe Drinking Water Act . . . . . 5-9
  - 5.3.4 Resource Conservation and Recovery Act . . . . . 5-10
  - 5.3.5 Toxic Substances Control Act . . . . . 5-10
  - 5.3.6 Comprehensive Environmental Response, Compensation, and Liability Act . . . . . 5-10
  - 5.3.7 Superfund Amendment and Reauthorization Act . . . . . 5-11
- 5.4 Occupational Safety and Health Administration . . . . . 5-12
- 5.5 U.S. Department of Transportation . . . . . 5-12
- 5.6 Council on Environmental Quality . . . . . 5-13
- 5.7 International Atomic Energy Agency . . . . . 5-13
- 5.8 Conclusion . . . . . 5-15
- 5.9 References . . . . . 5-15

6.0 FINAL PROJECT CONFIGURATION BASED PLANNING . . . . . 6-1
- 6.1 Initial Site Configuration . . . . . 6-1
  - 6.1.1 Initial Project Boundary . . . . . 6-1
  - 6.1.2 Initial Project Contents . . . . . 6-1
- 6.2 Final Site Configuration . . . . . 6-2
  - 6.2.1 Final Site Boundary . . . . . 6-2
  - 6.2.2 Final Project Contents . . . . . 6-2
  - 6.2.3 Project Site Release Criteria . . . . . 6-2
- 6.3 Identification of Material for Disposition . . . . . 6-3
  - 6.3.1 Material to Be Disposed of Off-Site . . . . . 6-5
    - 6.3.1.1 Material Imported During Decommissioning . . . . . 6-5
    - 6.3.1.2 Utility Material . . . . . 6-5
  - 6.3.2 Material to Be Disposed of On-Site . . . . . 6-5

**CONTENTS**
**(Continued)**


6.4 Material-Driven Planning . . . . . 6-5
6.4.1 Identification of Material Disposition . . . . . 6-7
6.4.2 Identification of Material Recipient . . . . . 6-7
6.4.3 Identification of Acceptance Criteria . . . . . 6-7
6.4.4 Characterization to Meet the Acceptance Criteria . . . . . 6-7
6.5 Case Studies . . . . . 6-7
6.5.1 The 3033 Storage Garden Decommissioning Project . . . . . 6-7
6.5.2 The Princeton-Pennsylvania Accelerator Decommissioning Project . . . . . 6-10
6.5.3 The Shippingport Station Decommissioning Project . . . . . 6-12
6.6 Conclusion . . . . . 6-15
6.7 References . . . . . 6-15

7.0 CHARACTERIZATION . . . . . 7-1
7.1 Introduction . . . . . 7-1
7.2 Elements of Characterization . . . . . 7-4
7.2.1 Review of Historical Information . . . . . 7-4
7.2.2 Definition of Characterization Objectives . . . . . 7-5
7.2.3 Preparation of a Sampling and Analysis Plan . . . . . 7-7
7.2.3.1 Required Analyses and Sensitivities . . . . . 7-7
7.2.3.2 Comparison Criteria . . . . . 7-8
7.2.3.3 Comparison Quality and Economy . . . . . 7-9
7.2.3.4 Statistical Test Planning . . . . . 7-10
7.2.3.5 Quality Assurance Requirements . . . . . 7-11
7.2.4 Sampling and Measurement . . . . . 7-13
7.2.5 Data Management . . . . . 7-14
7.2.6 Review of the Program and Data . . . . . 7-15
7.3 Characterization Methods . . . . . 7-16
7.3.1 Passive Measurements . . . . . 7-16
7.3.1.1 Alpha and Beta Measurements . . . . . 7-18
7.3.1.2 Gamma Measurements . . . . . 7-19
7.3.1.3 Neutron Measurements . . . . . 7-20
7.3.1.4 Smearable Contamination . . . . . 7-21
7.3.1.5 Dose Rate Measurements . . . . . 7-21
7.3.1.6 X-Ray Measurements . . . . . 7-22
7.3.1.7 Alpha and Beta Spectrometry . . . . . 7-22
7.3.1.8 Liquid Scintillation . . . . . 7-22
7.3.1.9 Organic-Vapor Analyzers . . . . . 7-23
7.3.1.10 Mercury-Vapor Detection . . . . . 7-23

# CONTENTS
## (Continued)


7.3.2 Active Measurements . . . . . 7-23
7.3.2.1 Real-Time Radiography . . . . . 7-24
7.3.2.2 Digital Radiography . . . . . 7-24
7.3.2.3 Computed Tomography . . . . . 7-24
7.3.2.4 X-Ray Fluorescence for Lead . . . . . 7-25
7.3.2.5 Passive/Active Neutron Measurements . . . . . 7-25
7.3.2.6 Neutron Signal Imaging . . . . . 7-26
7.3.2.7 Californium-252 Shuffler . . . . . 7-26
7.3.2.8 Neutron-Capture Gamma Measurement . . . . . 7-26
7.4 Other On-Site Laboratory Analyses . . . . . 7-27
7.5 Off-Site Laboratory Analyses Available . . . . . 7-28
7.6 Other Techniques . . . . . 7-30
7.7 Conclusion . . . . . 7-31
7.8 References . . . . . 7-31

8.0 WASTE TREATMENT . . . . . 8-1
8.1 Introduction . . . . . 8-1
8.2 Solid Processing . . . . . 8-10
8.2.1 Stabilization/Solidification Technology . . . . . 8-10
8.2.1.1 Process Overview . . . . . 8-11
8.2.1.2 Formulation . . . . . 8-11
8.2.1.3 Inorganic Stabilization/Solidification . . . . . 8-14
8.2.1.4 Organic Stabilization/Solidification . . . . . 8-15
8.2.1.5 Macro encapsulation . . . . . 8-15
8.2.1.6 Organic Polymerization Stabilization/Solidification . . . . 8-15
8.2.1.7 Vitrification . . . . . 8-16
8.2.1.8 Stabilization/Solidification Activity in the Various Environmental Protection Agency Regions . . . . . 8-16
8.2.2 Compaction for Volume Reduction . . . . . 8-19
8.2.3 Shredders for Volume Reduction . . . . . 8-20
8.2.4 Smelting and Melt Refining . . . . . 8-23
8.3 Sludge Processing . . . . . 8-26
8.3.1 Dewatering Equipment . . . . . 8-26
8.3.2 Factors Affecting Dewatering . . . . . 8-31
8.4 Liquid Processing . . . . . 8-35
8.4.1 Clarifiers . . . . . 8-35
8.4.2 Filtration . . . . . 8-35
8.4.2.1 Strainer and Filter Bag Baskets . . . . . 8-38
8.4.2.2 Depth Filters . . . . . 8-38

**CONTENTS**
**(Continued)**


8.4.2.3 Cartridge Filters . . . . . 8-39
8.4.2.4 Precoat Filters . . . . . 8-39
8.4.3 Membrane Separation Processes . . . . . 8-42
8.4.4 Ion Exchange . . . . . 8-45
8.4.4.1 Types of Ion Exchangers . . . . . 8-46
8.4.4.2 Factors Affecting Performance in an Ion-Exchange System . . . . . 8-49
8.4.4.3 Experience at Facilities . . . . . 8-51
8.4.5 Carbon Adsorption . . . . . 8-52
8.4.5.1 Activated Carbon Adsorption Capacity . . . . . 8-53
8.4.5.2 Carbon Adsorption Systems . . . . . 8-54
8.4.5.3 Carbon Adsorption (Vapor Phase) . . . . . 8-56
8.5 Gaseous Processing . . . . . 8-57
8.5.1 Gaseous Effluents . . . . . 8-57
8.5.2 Gases and Vapors . . . . . 8-62
8.6 Thermal Treatment . . . . . 8-62
8.6.1 Low- and Medium-Temperature Thermal Treatment . . . . . 8-63
8.6.1.1 Indirect Thermal Reactors . . . . . 8-65
8.6.1.2 Direct Thermal Reactor . . . . . 8-67
8.6.1.3 Low-Temperature Equipment . . . . . 8-67
8.6.1.4 Medium-Temperature Equipment . . . . . 8-67
8.6.2 High-Temperature Treatment . . . . . 8-70
8.6.2.1 Combustion Systems General Guidelines . . . . . 8-70
8.6.2.2 Solids Combustion Systems . . . . . 8-70
8.6.2.3 Sludge Combustion Systems . . . . . 8-71
8.6.2.4 Liquid Combustion Systems . . . . . 8-73
8.6.2.5 Gas Combustion Systems . . . . . 8-74
8.6.3 Air Pollution Control Systems . . . . . 8-74
8.7 Conclusions . . . . . 8-74
8.8 References . . . . . 8-78

9.0 DECONTAMINATION . . . . . 9-1
9.1 Introduction . . . . . 9-1
9.2 Chemical Decontamination . . . . . 9-3
9.2.1 Introduction . . . . . 9-3
9.2.2 Decontamination Chemistry . . . . . 9-4
9.2.2.1 Water/Steam . . . . . 9-5
9.2.2.2 Strong Mineral Acids . . . . . 9-6
9.2.2.3 Acid Salts . . . . . 9-8
9.2.2.4 Organic/Weak Acids . . . . . 9-8

# CONTENTS
## (Continued)


9.2.2.5 Alkaline Salts . . . . . 9-11
9.2.2.6 Complexing Agents . . . . . 9-12
9.2.2.7 Oxidizing and Reducing (REDOX) Agents . . . . . 9-12
9.2.2.8 Detergents and Surfactants . . . . . 9-18
9.2.2.9 Organic Solvents . . . . . 9-19
9.2.3 Multiphase Treatment Processes . . . . . 9-20
9.2.3.1 Alkaline Permanganate Processing . . . . . 9-20
9.2.3.2 Selection of Chemical Decontamination Processes . . . . 9-22
9.2.4 Foam Decontamination . . . . . 9-23
9.2.4.1 Process Description . . . . . 9-23
9.2.4.2 Applications . . . . . 9-23
9.2.4.3 Waste Processing . . . . . 9-27
9.2.5 Chemical Gels . . . . . 9-27
9.2.5.1 Process Description . . . . . 9-27
9.2.5.2 Applications . . . . . 9-27
9.2.5.3 Waste Processing . . . . . 9-28
9.3 Mechanical Decontamination . . . . . 9-28
9.3.1 Flushing with Water . . . . . 9-29
9.3.1.1 Description of Technique . . . . . 9-29
9.3.1.2 Applications . . . . . 9-33
9.3.2 Dusting/Vacuuming/Wiping/Scrubbing . . . . . 9-33
9.3.2.1 Description of Technique . . . . . 9-33
9.3.2.2 Applications . . . . . 9-33
9.3.3 Fixative/Stabilizer Coatings . . . . . 9-34
9.3.3.1 Description of Technique . . . . . 9-34
9.3.3.2 Applications . . . . . 9-34
9.3.4 Turbulator . . . . . 9-35
9.3.4.1 Description of Technique . . . . . 9-35
9.3.4.2 Applications . . . . . 9-35
9.3.5 Metal-Based Paint Removal . . . . . 9-35
9.3.5.1 Description of Technique . . . . . 9-35
9.3.5.2 Applications . . . . . 9-37
9.3.6 Strippable Coatings . . . . . 9-37
9.3.6.1 Description of Technique . . . . . 9-37
9.3.6.2 Applications . . . . . 9-38
9.3.7 Steam Cleaning . . . . . 9-39
9.3.7.1 Description of Technique . . . . . 9-39
9.3.7.2 Applications . . . . . 9-39

## CONTENTS
## (Continued)


9.3.8 Sponge Blasting . . . . . 9-39
9.3.8.1 Description of Technique . . . . . 9-39
9.3.8.2 Applications . . . . . 9-41
9.3.9 $CO_2$ Blasting . . . . . 9-41
9.3.9.1 Description of Technique . . . . . 9-41
9.3.9.2 Applications . . . . . 9-42
9.3.10 Wet Ice Blasting . . . . . 9-42
9.3.10.1 Description of Technique . . . . . 9-42
9.3.10.2 Applications . . . . . 9-44
9.3.11 Hydroblasting . . . . . 9-44
9.3.11.1 Description of Technique . . . . . 9-44
9.3.11.2 Applications . . . . . 9-44
9.3.12 Ultra-High-Pressure Water . . . . . 9-46
9.3.12.1 Description of Technique . . . . . 9-46
9.3.12.2 Applications . . . . . 9-46
9.3.13 Shot Blasting . . . . . 9-47
9.3.13.1 Description of Technique . . . . . 9-47
9.3.13.2 Applications . . . . . 9-47
9.3.14 Wet Abrasive Cleaning . . . . . 9-47
9.3.14.1 Description of Technique . . . . . 9-47
9.3.14.2 Applications . . . . . 9-49
9.3.15 Grit Blasting . . . . . 9-49
9.3.15.1 Description of Technique . . . . . 9-49
9.3.15.2 Applications . . . . . 9-49
9.3.16 Grinding . . . . . 9-51
9.3.16.1 Description of Technique . . . . . 9-51
9.3.16.2 Applications . . . . . 9-52
9.3.17 Scarifiers . . . . . 9-52
9.3.17.1 Description of Technique . . . . . 9-52
9.3.17.2 Applications . . . . . 9-55
9.3.18 Milling . . . . . 9-57
9.3.18.1 Description of Technique . . . . . 9-57
9.3.18.2 Applications . . . . . 9-58
9.3.19 Drill and Spall . . . . . 9-58
9.3.19.1 Description of Technique . . . . . 9-58
9.3.19.2 Applications . . . . . 9-58
9.3.20 Paving Breaker and Chipping Hammer . . . . . 9-60
9.3.21 Expansive Grout . . . . . 9-60
9.3.22 Asbestos Removal . . . . . 9-60

## CONTENTS
## (Continued)


9.4 Other Decontamination Techniques . . . . . 9-61
9.4.1 Electropolishing . . . . . 9-61
9.4.1.1 Description of Technique . . . . . 9-62
9.4.1.2 Applications . . . . . 9-66
9.4.2 Ultrasonic Cleaning . . . . . 9-66
9.4.2.1 Description of Technique . . . . . 9-66
9.4.2.2 Applications . . . . . 9-68
9.4.3 Vibratory Finishing . . . . . 9-68
9.4.3.1 Description of Technique . . . . . 9-68
9.4.3.2 Applications . . . . . 9-68
9.5 Emerging Technologies . . . . . 9-69
9.5.1 Light Ablation . . . . . 9-69
9.5.1.1 Description of Technique . . . . . 9-69
9.5.1.2 Applications . . . . . 9-70
9.5.2 Microwave Scabbling . . . . . 9-70
9.5.3 Flaming . . . . . 9-71
9.5.3.1 Description of Technique . . . . . 9-71
9.5.3.2 Applications . . . . . 9-73
9.5.4 Flame Scarifying . . . . . 9-73
9.5.5 Plasma Torch Decontamination . . . . . 9-74
9.5.6 Electrical Resistance . . . . . 9-74
9.5.7 Microbial Degradation . . . . . 9-74
9.5.7.1 Description of Technique . . . . . 9-74
9.5.7.2 Application . . . . . 9-75
9.6 Conclusion . . . . . 9-75
9.7 References . . . . . 9-75

10.0 DISMANTLING, SEGMENTING, AND DEMOLITION . . . . . 10-1
10.1 Overview . . . . . 10-1
10.2 Process Selection . . . . . 10-2
10.3 Detailed Description of Dismantling/Segmenting Techniques . . . . . 10-11
10.3.1 Mechanical Cutting Techniques . . . . . 10-12
10.3.1.1 Power Nibblers and Shears . . . . . 10-12
10.3.1.2 Conventional Mechanical Saws . . . . . 10-14
10.3.1.3 Circular Cutters . . . . . 10-18
10.3.1.4 Abrasive Cutters . . . . . 10-22
10.3.1.5 Wall and Floor Sawing . . . . . 10-23
10.3.1.6 Diamond Wire Cutting . . . . . 10-26
10.3.1.7 Explosive Cutting . . . . . 10-29
10.3.1.8 Core Drilling and Stitch Drilling . . . . . 10-32

## CONTENTS
## (Continued)


10.3.2 Thermal Cutting Techniques . . . . . 10-34
10.3.2.1 Plasma Arc Cutting . . . . . 10-34
10.3.2.2 Oxygen Burning . . . . . 10-39
10.3.2.3 Flame Cutting . . . . . 10-43
10.3.2.4 Thermite Reaction Lance . . . . . 10-44
10.3.2.5 Arc Saw Cutting . . . . . 10-47
10.3.3 Abrasive Water-Jet Cutting . . . . . 10-51
10.4 Detailed Description of Demolition Techniques . . . . . 10-52
10.4.1 Mechanical Demolition Techniques . . . . . 10-56
10.4.1.1 Controlled Blasting . . . . . 10-57
10.4.1.2 Wrecking Ball or Wrecking Slab . . . . . 10-60
10.4.1.3 Cable-Suspended and Excavator-Mounted Attachments for Controlled Demolition . . . . . 10-61
10.4.1.4 Expansive Grout . . . . . 10-65
10.4.1.5 Rock Splitter . . . . . 10-66
10.4.1.6 Paving Breaker or Chipping Hammer . . . . . 10-68
10.4.2 Thermal Demolition—Controlled Burning . . . . . 10-69
10.5 Emerging Technologies . . . . . 10-70
10.5.1 Liquified Gas Cutting . . . . . 10-70
10.5.2 Electro-Discharge Machining . . . . . 10-70
10.5.3 Metal Disintegration Machining . . . . . 10-71
10.5.4 Laser Cutting . . . . . 10-72
10.5.5 Shape Memory Alloys . . . . . 10-72
10.6 Conclusion . . . . . 10-73
10.7 References . . . . . 10-73

11.0 REMOTE HANDLING EQUIPMENT AND OPERATIONS . . . . . 11-1
11.1 Basis of Remote Operation . . . . . 11-1
11.1.1 Enhanced Safety . . . . . 11-1
11.1.2 Cost Reduction . . . . . 11-2
11.1.3 Productivity Improvement . . . . . 11-2
11.1.4 Utilization of Facility Resources . . . . . 11-2
11.1.5 Accessibility . . . . . 11-2
11.1.6 Disadvantages to Remote Operation . . . . . 11-3
11.2 Technologies That Can Be Performed Remotely . . . . . 11-3
11.2.1 Detection Equipment . . . . . 11-5
11.2.1.1 Cameras and Lights . . . . . 11-5
11.2.1.2 Other Detectors . . . . . 11-5
11.2.2 Segmenting Equipment . . . . . 11-7
11.2.3 Decontamination Equipment . . . . . 11-7

# CONTENTS
## (Continued)


11.2.4 Materials Handling Equipment . . . . . 11-7
11.2.5 Sampling Equipment . . . . . 11-9
11.2.6 Handheld Equipment . . . . . 11-9
11.3 Remote Systems Configurations . . . . . 11-9
11.3.1 Control Stations . . . . . 11-11
11.3.1.1 Teleoperator Control Stations . . . . . 11-11
11.3.1.2 Teleoperator Managed Stations . . . . . 11-15
11.3.1.3 Automated Stations . . . . . 11-15
11.3.2 Communication and Power Links . . . . . 11-15
11.3.3 Support Platforms . . . . . 11-19
11.3.4 Arms . . . . . 11-19
11.3.4.1 Existing Equipment . . . . . 11-19
11.3.4.2 Robots . . . . . 11-19
11.3.4.3 Specialty Systems . . . . . 11-22
11.3.5 End Effectors and Tools . . . . . 11-22
11.4 Illustrative Experiences with Remote Applications . . . . . 11-26
11.4.1 Detection Equipment . . . . . 11-26
11.4.1.1 High-Level Waste Tank Farm Project, Idaho National Engineering Laboratory . . . . . 11-26
11.4.1.2 Remote Radioactive Waste Drum Inspection, Savannah River Site . . . . . 11-26
11.4.1.3 Robotic Devices for Pipe Inspection . . . . . 11-26
11.4.1.4 Mobile Surveillance System . . . . . 11-27
11.4.1.5 Shoreham Nuclear Power Station Termination Survey . 11-27
11.4.2 Segmenting Equipment . . . . . 11-27
11.4.2.1 Princeton-Pennsylvania Accelerator Decommissioning . 11-27
11.4.2.2 Pipe Crawler Development for Duct Elbow Removal, Savannah River Site . . . . . 11-27
11.4.2.3 Remote Decommissioning of Gunite Tanks, Oak Ridge National Laboratory . . . . . 11-29
11.4.2.4 Remote Abrasive Cutters, Pacific Northwest Laboratories . . . . . 11-29
11.4.3 Decontamination Equipment . . . . . 11-29
11.4.3.1 Hot Cell Decontamination, West Valley . . . . . 11-29
11.4.3.2 Decontamination of the Dissolver Loading Cell, Tokai Reprocessing Plant . . . . . 11-30
11.4.4 Materials Handling Equipment . . . . . 11-30
11.4.4.1 Versatile Remote Handling System, Los Alamos . . . . 11-30
11.4.4.2 T-Rex Materials Handling System . . . . . 11-31
11.4.4.3 Kerr Hollow Quarry Handling Systems . . . . . 11-31

**CONTENTS**
**(Continued)**


11.4.5 Sampling Equipment . . . . . 11-31
11.4.6 Handheld Equipment . . . . . 11-32
11.4.7 Miscellaneous Equipment . . . . . 11-32
11.5 Conclusions . . . . . 11-32
11.6 References . . . . . 11-32

12.0 WORKER PROTECTION . . . . . 12-1
12.1 Requirements . . . . . 12-1
12.1.1 DOE Worker Protection Requirements . . . . . 12-2
12.1.2 NRC Worker Protection Requirements . . . . . 12-2
12.1.3 OSHA Worker Protection Requirements . . . . . 12-2
12.2 Overview . . . . . 12-4
12.3 Health and Safety Program . . . . . 12-6
12.4 Review of Planned Work . . . . . 12-7
12.5 Work Area Assessment . . . . . 12-8
12.6 Work Area Controls . . . . . 12-9
12.7 Personnel Protection and Monitoring . . . . . 12-10
12.8 Guidance on Worker Protection . . . . . 12-12
12.9 Conclusions . . . . . 12-13
12.10 References . . . . . 12-13

13.0 ENVIRONMENTAL PROTECTION . . . . . 1
13.1 Air Quality Protection . . . . . 1
13.2 Surface Water Protection . . . . . 3
13.3 Groundwater Protection . . . . . 3
13.4 Shipments . . . . . 5
13.5 Effluent Sampling and Monitoring . . . . . 5
13.6 Environmental Monitoring . . . . . 6
13.7 Site Release Criteria . . . . . 6
13.8 Conclusion . . . . . 7
13.9 References . . . . . 7

14.0 PACKAGING AND TRANSPORTATION . . . . . 14-1
14.1 Packaging and Transportation Overview . . . . . 14-1
14.1.1 Logistics . . . . . 14-1
14.1.2 Regulatory Agencies . . . . . 14-3

# CONTENTS
## (Continued)


14.1.3 Environmental and Accident Risks . . . . . 14-5
14.1.3.1 Truck Transportation . . . . . 14-6
14.1.3.2 Barge and Rail Transportation . . . . . 14-7
14.1.3.3 Exposure Risks . . . . . 14-7
14.1.4 Cost . . . . . 14-8
14.2 Transportation of Hazardous Materials . . . . . 14-8
14.2.1 Elements of Hazardous Materials Transportation . . . . . 14-9
14.2.1.1 Naming . . . . . 14-12
14.2.1.2 Packaging . . . . . 14-12
14.2.1.3 Shipping Papers . . . . . 14-13
14.2.1.4 Marking and Labeling . . . . . 14-13
14.2.1.5 Placards . . . . . 14-14
14.2.1.6 Loading, Moving, and Unloading . . . . . 14-14
14.2.1.7 Incidents and Emergencies . . . . . 14-14
14.2.2 Elements of Radioactive Material Shipments . . . . . 14-15
14.3 Packaging of Hazardous Materials . . . . . 14-16
14.3.1 Packaging of Radioactive Materials . . . . . 14-16
14.3.1.1 Low Specific Activity . . . . . 14-17
14.3.1.2 Other Packages . . . . . 14-17
14.3.1.3 Package Conditions . . . . . 14-18
14.3.2 Packaging of Other Hazardous Materials . . . . . 14-18
14.3.3 Packaging of Mixed Wastes . . . . . 14-18
14.4 Categories of Waste . . . . . 14-18
14.4.1 Transuranic Wastes . . . . . 14-19
14.4.2 Low-Level Waste . . . . . 14-21
14.4.2.1 Regulations . . . . . 14-21
14.4.2.2 Waste Classification . . . . . 14-22
14.4.3 RCRA Waste . . . . . 14-23
14.4.4 TSCA Waste . . . . . 14-24
14.4.5 Radioactive Mixed Waste . . . . . 14-24
14.4.6 Nonregulated Wastes . . . . . 14-24
14.5 Waste Generated During CERCLA Activities . . . . . 14-25
14.6 Expert System for Hazardous Materials Transportation Packaging . . . . . 14-26
14.7 Conclusion . . . . . 14-28
14.8 References . . . . . 14-28

## CONTENTS
## (Continued)

15.0 DECOMMISSIONING COST ESTIMATES AND SCHEDULE . . . . . 15-1
15.1 Introduction . . . . . 15-1
15.2 Methodology . . . . . 15-1
15.2.1 Primary Cost . . . . . 15-2
15.2.2 Peripheral Cost . . . . . 15-6
15.2.3 Waste Stream Cost . . . . . 15-6
15.3 Cost Estimating Process . . . . . 15-6
15.3.1 Review of Scope of Work . . . . . 15-8
15.3.2 Development of the Building Block Structure . . . . . 15-8
15.3.3 Work Sequence Development . . . . . 15-8
15.3.4 Primary Costs . . . . . 15-9
15.3.4.1 Labor Costs . . . . . 15-11
15.3.4.2 Material Costs . . . . . 15-12
15.3.4.3 Equipment Costs . . . . . 15-15
15.3.4.4 Subcontracts . . . . . 15-17
15.3.4.5 Other . . . . . 15-17
15.3.5 Peripheral Cost Factors . . . . . 15-19
15.3.6 Waste Stream Cost . . . . . 15-20
15.3.6.1 Handling (Loading and Unloading) . . . . . 15-20
15.3.6.2 Decontamination Processing . . . . . 15-21
15.3.6.3 Volume Reduction . . . . . 15-21
15.3.6.4 Packaging and Containment . . . . . 15-21
15.3.6.5 Characterization of the Waste . . . . . 15-21
15.3.6.6 Shipping and Transportation Regulations . . . . . 15-22
15.3.6.7 Burial . . . . . 15-22
15.3.6.8 Fees and Surcharges . . . . . 15-22
15.3.7 Development of Total Project Costs . . . . . 15-28
15.3.7.1 Contingency . . . . . 15-28
15.3.7.2 Salvage and Scrap . . . . . 15-28
15.3.7.3 Property Insurance and Tax . . . . . 15-29
15.3.8 Variability of Cost Elements . . . . . 15-29
15.3.8.1 Work Difficulty Factors . . . . . 15-29
15.3.8.2 Regional Variation in Labor Rates . . . . . 15-31
15.3.8.3 Material and Equipment Cost Variations . . . . . 15-32
15.3.8.4 Overhead Plus Fee, Salvage, and Scrap Value Variations . . . . . 15-32
15.3.8.5 Energy Cost Variations . . . . . 15-32

# CONTENTS
## (Continued)

15.4 Schedule and Resources . . . . . 15-32
15.4.1 Schedule . . . . . 15-33
15.4.1.1 Schedule Methodology . . . . . 15-33
15.4.1.2 Assumptions and Bases for Schedule Development . . . 15-37
15.4.1.3 Schedule Development . . . . . 15-38
15.4.1.4 Critical Path Analysis . . . . . 15-38
15.4.2 Resource and Cost . . . . . 15-38
15.4.2.1 Resource Cost Development . . . . . 15-39
15.4.2.2 Resource Curves . . . . . 15-39
15.5 Conclusion . . . . . 15-42
15.6 References . . . . . 15-42

APPENDIX . . . . . A-1

GLOSSARY OF TERMS . . . . . G-1

INDEX . . . . . I-1

# FIGURES

Figure 6.1 Overall decommissioning material balance . . . . . 6-4

Figure 6.2 Materials disposition matrix . . . . . 6-6

Figure 6.3 Illustrative materials disposition matrix for the 3033 Storage Garden Decommissioning Project . . . . . 6-9

Figure 6.4 Illustrative materials disposition matrix for the PPA Decommissioning Project . . . . . 6-11

Figure 6.5 Illustrative materials disposition matrix for the Shippingport Station Decommissioning Project . . . . . 6-14

Figure 8.1 Typical stabilization process flow schematic . . . . . 8-12

Figure 8.2 Typical shredder . . . . . 8-22

Figure 8.3 A commercial multipurpose slag resistance furnace . . . . . 8-24

Figure 8.4 Typical plasma furnace . . . . . 8-25

Figure 8.5 Typical composition of furnace batch charge . . . . . 8-27

Figure 8.6 Diagram of belt filter process . . . . . 8-28

Figure 8.7 Cross section of a fixed-volume recessed plate filter assembly . . . . . 8-30

Figure 8.8 Solid bowl centrifuge . . . . . 8-32

Figure 8.9 Dewatering accessories for optimum efficiency . . . . . 8-34

Figure 8.10 Physical separation technology and particle size . . . . . 8-36

Figure 8.11 Particle size of common materials . . . . . 8-37

Figure 8.12 Typical filtration vessel elements . . . . . 8-40

Figure 8.13 Tubular-type precoat filer system . . . . . 8-41

Figure 8.14 Membrane separation ranges . . . . . 8-43

## FIGURES
## (Continued)

Figure 8.15 Pore sizes for membrane separation processes . . . . . 8-44

Figure 8.16 Typical two-bed deionizing system . . . . . 8-47

Figure 8.17 Principles of mixed-bed ion exchange (Perry) . . . . . 8-48

Figure 8.18 Ion exchange module . . . . . 8-50

Figure 8.19 Carbon adsorption systems . . . . . 8-55

Figure 8.20 Adsorption capacities of carbon . . . . . 8-58

Figure 8.21 Typical gaseous effluent processing flow diagram . . . . . 8-60

Figure 8.22 Common HEPA filter configuration and test manifolds . . . . . 8-61

Figure 8.23 Particle size limitations on solids-liquids separation of wettable minerals for various applicable equipment classifications . . . . . 8-64

Figure 8.24 Modular oil heater . . . . . 8-66

Figure 8.25 Thermal sludge dehydration systems . . . . . 8-68

Figure 8.26 Medium-temperature treatment arrangement . . . . . 8-69

Figure 8.27 Fluid-bed configuration . . . . . 8-72

Figure 8.28 Fume incinerator . . . . . 8-75

Figure 8.29 Combination type APCS . . . . . 8-76

Figure 8.30 Typical APCS components for an incinerator . . . . . 8-77

Figure 9.1 Schematic of a typical square tank turbulator assembly and different flow patterns . . . . . 9-36

Figure 9.2 Sponge-jet feed unit . . . . . 9-40

Figure 9.3 $CO_2$ pellets and blasting in progress . . . . . 9-43

## FIGURES
## (Continued)

Figure 9.4 Schematic diagram of the hydroblasting process . . . . . 9-45

Figure 9.5 Portable shot blast units . . . . . 9-48

Figure 9.6 10-ft by 15-ft walk-in decontamination booth . . . . . 9-50

Figure 9.7 Heavy-duty floor grinder . . . . . 9-53

Figure 9.8 Scarifying equipment . . . . . 9-54

Figure 9.9 Scabbler . . . . . 9-56

Figure 9.10 Schematic of concrete spaller . . . . . 9-59

Figure 9.11 Electropolishing schematic diagram (adapted from Sanders and Turner 1991) . . . . . 9-63

Figure 9.12 Partial immersion electropolishing schematic diagram . . . . . 9-67

Figure 9.13 Microwave scabbler . . . . . 9-72

Figure 10.1 Relationship between labor expenditure and weight of dismantled components . . . . . 10-10

Figure 10.2 Typical pneumatic shear arrangement . . . . . 10-13

Figure 10.3 Portable air-powered guillotine saw . . . . . 10-16

Figure 10.4 Circular cutting machine . . . . . 10-19

Figure 10.5 Schematic of a clamshell lathe . . . . . 10-20

Figure 10.6 Photo of rotary cutter . . . . . 10-21

Figure 10.7 Typical wall saw . . . . . 10-24

Figure 10.8 Typical floor saw . . . . . 10-25

Figure 10.9 Off-center drive unit and a schematic comparing it with a conventional saw . . . . . 10-27

## FIGURES
## (Continued)

Figure 10.10 Diamond wire cutting machine and a diamond wire . . . . . 10-28

Figure 10.11 Typical cutter composition and detonation sequence during a cut . . . . . 10-30

Figure 10.12 Core stitch drilling in progress . . . . . 10-33

Figure 10.13 Typical portable plasma arc torch . . . . . 10-35

Figure 10.14 Remote plasma arc cutting system schematic . . . . . 10-36

Figure 10.15 Plasma torch system for reactor vessel schematic . . . . . 10-37

Figure 10.16 Hand-operated automatic gas cutting tool . . . . . 10-40

Figure 10.17 Circumferential flame cutting unit . . . . . 10-41

Figure 10.18 Top biological shield during thermic lance process . . . . . 10-46

Figure 10.19 Typical arc saw cutting head . . . . . 10-48

Figure 10.20 Conceptual schematic of arc saw remote manipulation . . . . . 10-49

Figure 10.21 Water-jet cutting system for the removal of a biological shield . . . . . 10-53

Figure 10.22 Abrasive cutting head adapted with an air mantle nozzle . . . . . 10-54

Figure 10.23 Effect of surrounding medium on cutting efficiency . . . . . 10-55

Figure 10.24 Blasting round . . . . . 10-58

Figure 10.25 Concrete pulverizer jaw (above), interchangeable jaws (below) . . . . . 10-62

Figure 10.26 Hydraulic ram used at Shippingport . . . . . 10-64

Figure 10.27 Schematic of the operating principle of a rock splitter . . . . . 10-67

Figure 11.1 Remote skill saw with modified grip (PNL 1992) . . . . . 11-3

Figure 11.2 Remote alignment and pinning method with self-standing lifting bail (NSA 1978) . . . . . 11-4

## FIGURES
## (Continued)

Figure 11.3 Mobile robot with onboard cameras and lights . . . . . 11-6

Figure 11.4 Remotely operated reciprocating saw . . . . . 11-8

Figure 11.5 Remotely operated pneumatic clamshell . . . . . 11-10

Figure 11.6 Traditional teleoperated control station . . . . . 11-12

Figure 11.7 Advanced control station for an inspection vehicle . . . . . 11-13

Figure 11.8 Advanced control station for the warrior system . . . . . 11-14

Figure 11.9 Multiple display screen control station . . . . . 11-16

Figure 11.10 Touch screen control monitor . . . . . 11-17

Figure 11.11 Virtual reality model displayed on monitor (Trivedi 1993) . . . . . 11-18

Figure 11.12 Geometry schematic diagrams for robotic arms (Shahinpoor 1987) . . . . 11-21

Figure 11.13 Tensor-arm geometry schematic diagram (Shahinpoor 1987) . . . . . 11-23

Figure 11.14 Robot end effectors: single-jawed mechanical gripper (top); dual-jawed cam-operated gripper (bottom) (Shahinpoor 1987) . . . . . 11-24

Figure 11.15 Robotic hand-style end effectors (Shahinpoor 1987) . . . . . 11-25

Figure 11.16 Remote hydraulic hammer operation (Bair 1990) . . . . . 11-28

Figure 15.1 Decommissioning component breakdown . . . . . 15-3

Figure 15.2 General approach for calculating a total project cost . . . . . 15-4

Figure 15.3 Cost estimating building block structure . . . . . 15-7

Figure 15.4 Typical estimate breakdown of crew mix and equipment . . . . . 15-10

Figure 15.5 Sample engineering block flow diagram (contaminated materials) . . . . . 15-13

Figure 15.6 Sample engineering block flow diagram (noncontaminated materials) . . 15-14

## FIGURES
## (Continued)

Figure 15.7 Estimating/scheduling/cost control interaction . . . . . 15-33

Figure 15.8 Representative milestone schedule . . . . . 15-34

Figure 15.9 Logic network . . . . . 15-36

Figure 15.10 Project resource profile . . . . . 15-40

Figure 15.11 Project cash flow . . . . . 15-41

# TABLES


Table 3.1 Decommissioning Project Organization Functions . . . . . 3-11

Table 5.1 IAEA Documents on Decommissioning and Decontamination of Nuclear Facilities . . . . . 5-13

Table 6.1 Established Criteria for Release for Unrestricted Use . . . . . 6-3

Table 7.1 Standard Radiological and Chemical Measurement Techniques Amenable for Use on a Decommissioning Site . . . . . 7-17

Table 7.2 Standard Radiochemical Analyses Available from Off-Site Laboratories . . . . . 7-29

Table 8.1 Waste Treatment Technologies . . . . . 8-3

Table 8.2 Stabilization/Solidification Case Studies . . . . . 8-17

Table 8.3 Volume Reduction from Supercompaction . . . . . 8-20

Table 8.4 Selection Criteria for Sedimentation Centrifuges . . . . . 8-33

Table 8.5 Characteristics of Typical Ion Exchange Resins . . . . . 8-46

Table 8.6 General Adsorption Data for Organics Obtained from Adsorption Isotherms . . . . . 8-52

Table 9.1 Chemical Decontamination Applications for Metallic Materials . . . . . 9-24

Table 9.2 Decontamination Technology . . . . . 9-30

Table 10.1 Summary of Application for Metal Cutting . . . . . 10-3

Table 10.2 Summary of Application for Cutting Demolition of Concrete . . . . . 10-6

Table 10.3 Cutting Speed for Concrete Saw . . . . . 10-23

Table 10.4 Arc Saw System Parameters . . . . . 10-51

Table 10.5 Concrete Removal Rates Using Controlled Blasting . . . . . 10-59

Table 10.6 Concrete Removal Rates Using a Wrecking Ball . . . . . 10-61

## TABLES
## (Continued)


Table 10.7 Recommended Demolition Fracturing Compound Parameters for Reinforced Massive Concrete . . . . . 10-66

Table 10.8 Paving Breaker—Size and Capacity . . . . . 10-68

Table 10.9 Chipping Hammer Operational Parameters . . . . . 10-69

Table 13.1 National Ambient Air Quality Standards . . . . . 13-2

Table 13.2 Maximum Contaminant Levels . . . . . 13-4

Table 14.1 Hazardous Materials Classes and Index to Hazard Class Definition . . . . 14-11

Table 14.2 Priority Classifications of Radioactive Materials Containing Other Hazardous Materials . . . . . 14-19

Table 14.3 TRU Elements and Alpha Emitters . . . . . 14-20

Table 15.1 Variations in Labor and Material Costs* . . . . . 15-15

Table 15.2 Fuel Oil and Electrical Rate Variations* . . . . . 15-19

Table 15.3 Disposal Sites Cost Data . . . . . 15-23

Table 15.4 Guidelines for Selection of PPE . . . . . 15-30

Table 15.5 PPE Lost Time Guidelines . . . . . 15-31

## ACRONYMS AND ABBREVIATIONS

| | |
|---|---|
| A | amps |
| AC | ammonium citrate |
| acfm | actual cubic foot per minute |
| AEA | Atomic Energy Act |
| ALARA | as low as is reasonably achievable |
| ANSI | American National Standards Institute |
| AP | alkaline permanganate |
| APAC | alkaline permanganate-ammonium citrate |
| APACE | APAC with EDTA |
| APCS | air pollution control system |
| APOX | AP with oxalic acid |
| APSul | AP with sulfamic acid |
| ARAR | applicable or relevant and appropriate requirement |
| ASME | American Society of Mechanical Engineers |
| ASTM | American Society for Testing and Materials |
| atm | atmosphere (14.7 psia) |
| ATMS | Automated Transportation Management System |
| AWS | American Welding Society |
| BDAT | best demonstrated available technology |
| BNFL | British Nuclear Fuels Limited |
| BNL | Brookhaven National Laboratory |
| BRC | Below Regulatory Concern |
| Btu | British thermal unit |
| °C | degrees Celsius |
| CAA | Clean Air Act of 1970 |
| CEGB | U.K. Central Electricity Generating Board |
| CEQ | Council on Environmental Quality |
| CERCLA | Comprehensive Environmental Response, Compensation and Liability Act of 1980 |
| CFR | Code of Federal Regulations |
| CHTRU | contact-handled transuranic |
| Ci | curie |
| cm | centimeter(s) |
| CORD | chemical oxidation reduction decontamination |
| CPM | Critical Path Method |
| cps | centipoise |
| CT | computed tomography |
| CWA | Clean Water Act of 1977 |

## ACRONYMS AND ABBREVIATIONS
## (Continued)

| | |
|---|---|
| D&D | decontamination and decommissioning |
| dB | decibel |
| dc | direct current |
| DF | decontamination factor |
| DOC | U.S. Department of Commerce |
| DOE | U.S. Department of Energy |
| DOT | U.S. Department of Transportation |
| dpm | disintegrations per minute |
| DR | digital radiography |
| DRE | destruction removal efficiency |
| DT&E | demonstration, testing, and evaluation |
| DVB | divinylbenzene |
| EAF | electric arc furnace |
| EDM | electro discharge machinery |
| EDTA | ethylenediaminetetra-acetic acid |
| EIS | environmental impact statement |
| ELOMIX | electrochemical LOMI ion exchange |
| EM-40 | DOE Office of Environmental Restoration |
| EMM | electromechanical manipulator |
| ENSERCH | ENSERCH Environmental Corporation |
| EPA | Environmental Protection Agency |
| EPRI | Electric Power Research Institute |
| ER | Environmental Restoration |
| ERWM | Environmental Restoration and Waste Management |
| ES&H | Environment, Safety, and Health |
| °F | degrees Fahrenheit |
| FID | flame ionization detectors |
| FS | feasibility study |
| FTE | full time equivalent |
| g | gram |
| GeV | gigaelectronvolt |
| GM | Geiger-Müller |
| GMF | granular media filtration |
| HEPA | high-efficiency particulate air |
| HMT | Hazardous Materials Tables |

## ACRONYMS AND ABBREVIATIONS
## (Continued)

| | |
|---|---|
| HTB | high test bleach |
| HVAC | heating, ventilating and air conditioning |
| IAEA | International Atomic Energy Agency |
| INEL | Idaho National Engineering Laboratory |
| ISFSI | independent spent fuel storage installation |
| ISO | International Standards Organization |
| JPDR | Japan Power Demonstration Reactor |
| K | Kelvin |
| keV | kilo electron volt |
| kVp | kilovolt peak |
| kwh | kilowatt per hour |
| l | liter |
| lf | linear feet |
| LLW | low-level radioactive waste |
| LLLW | liquid low-level radioactive waste |
| LOMI | low oxidation-state metal ion |
| LSA | low specific activity |
| MCL | maximum contaminant level |
| MDM | metal disintegration machinery |
| MMES | Martin Marietta Energy Systems, Inc. |
| MPRSA | Marine Protection Research and Sanctuaries Act |
| ms | millisecond |
| MSDS | Material Safety Data Sheet |
| MSM | master-slave manipulator |
| MTT | medium temperature treatment |
| MW | megawatt |
| NCP | National Oil and Hazardous Substances Pollution Contingency Plan |
| NCRP | National Council on Radiation Protection and Measurements |
| NEA | Nuclear Energy Agency |
| NEPA | National Environmental Policy Act of 1969 |
| NES | Nuclear Energy Services |
| NESHAPs | National Emission Standards for Hazardous Air Pollutants |

## ACRONYMS AND ABBREVIATIONS
## (Continued)

| | |
|---|---|
| n.o.s | not otherwise specified |
| NP | nitric acid permanganate |
| NPDES | National Pollutant Discharge Elimination System |
| NRC | U.S. Nuclear Regulatory Commission |
| NTA | nitrilotriacetic acid |
| OD | outer diameter |
| OPP | oxalic peroxide |
| ORM | Other Radioactive Material |
| ORNL | Oak Ridge National Laboratory |
| OSHA | Occupational Safety and Health Administration |
| OX | oxalic acid |
| PC | personal computer |
| PCBs | polychlorinated biphenyls |
| PETN | pentaerythritol tetranitrate |
| PID | photoionization detectors |
| PLC | process logic controller |
| PNL | Pacific Northwest Laboratories |
| POD | PWR oxidation decontamination |
| PP | polypropylene |
| PPA | Princeton-Pennsylvania Accelerator |
| PPE | personal protective equipment |
| ppm | parts per million |
| ppmm | parts per million by mass |
| psf | pounds per square foot |
| psi | pounds per square inch |
| psia | pounds per square inch absolute |
| psig | pounds per square inch gauge |
| PSPC | position sensitive proportional counter |
| PWR | pressurized-water reactor |
| QA | quality assurance |
| QC | quality control |
| R&D | research and development |
| RAPIC | Remedial Action Program Information Center |
| RCRA | Resource Conservation and Recovery Act of 1976 |
| RHTRU | remotely/handled transuranic |
| ROV | remotely operated vehicle |

## ACRONYMS AND ABBREVIATIONS
## (Continued)

| | |
|---|---|
| rpm | revolutions per minute |
| RPP | rigid polypropylene |
| RPV | Reactor Pressure Vessel |
| RSIC | Radiation Shielding Information Center |
| RTR | real-time radiography |
| | |
| s | seconds |
| S&M | surveillance and maintenance |
| SARA | Superfund Amendment and Reauthorization Act |
| scfm | standard cubic feet per minute |
| SDWA | Safe Drinking Water Act |
| SMA | shape memory alloys |
| SNF | spent nuclear fuel |
| SNM | Special Nuclear Material |
| SPCC | Spill Prevention Control & Countermeasures |
| SRE | Sodium Reactor Experiment |
| SRS | Savannah River Site |
| S/S | stabilization/solidification |
| ss | stainless steel |
| STB | supertropical bleach |
| | |
| TCLP | Toxicity Characteristic Leaching Procedure |
| TDEC | Tennessee Department of Environment and Conservation |
| TLD | thermoluminescence dosimeter |
| TNT | trinitrotoluene |
| TPQ | threshold planning quantity |
| TRU | transuranic |
| TSCA | Toxic Substances Control Act of 1976 |
| | |
| UNC | United Nuclear Corporation |
| U.S. | United States |
| USRADS | Ultrasonic Ranging and Data System |
| UV | ultraviolet |
| | |
| V | volts |
| VOC | volatile organic compounds |
| | |
| W | watts |
| WAC | Waste Acceptance Criteria |
| WAGR | Windscale Advanced Gas Cooled Reactor |

## ACRONYMS AND ABBREVIATIONS
## (Continued)

| | |
|---|---|
| WBS | Work Breakdown Structure |
| WIPP | Waste Isolation Pilot Plant |
| yr | year |

# EXECUTIVE SUMMARY

The *Decommissioning Handbook* is a technical guide for the decommissioning of nuclear facilities. The decommissioning of a nuclear facility involves the removal of the radioactive and, for practical reasons, hazardous materials to enable the facility to be released and not represent a further risk to human health and the environment. This handbook identifies and technologies and techniques that will accomplish these objectives. The emphasis in this handbook is on characterization; waste treatment; decontamination; dismantling, segmenting, demolition; and remote technologies. Other aspects that are discussed in some detail include the regulations governing decommissioning, worker and environmental protection, and packaging and transportation of the waste materials. The handbook describes in general terms the overall decommissioning project, including planning, cost estimating, and operating practices that would ease preparation of the Decommissioning Plan and the decommissioning itself. The reader is referred to other documents for more detailed information.

This *Decommissioning Handbook* has been prepared by Enserch Environmental Corporation for the U.S. Department of Energy and is a complete restructuring of the original handbook developed in 1980 by Nuclear Energy Services. The significant changes between the two documents are the addition of current and the deletion of obsolete technologies and the addition of chapters on project planning and the Decommissioning Plan, regulatory requirements, characterization, remote technology, and packaging and transportation of the waste materials.

# 1.0 INTRODUCTION

## 1.1 Handbook Purpose

The *Decommissioning Handbook* has been prepared under contract to the U.S. Department of Energy (DOE) to provide technical guidance on the decommissioning—commonly known as *decontamination and decommissioning* (D&D)—of commercial and governmental nuclear facilities. Because of the unique hazards incumbent in nuclear facilities, their design, licensing, and startup (commissioning) require a stepwise program to address safety. Similarly, because of residual radioactivity, the termination of operations (decommissioning) presents unique hazards that must be addressed from a programmatic, safety, environmental, and technological standpoint. This handbook provides technical guidance for decommissioning activities, including characterization, decontamination, dismantling, and disposition (disposal or salvage) of a facility's equipment and structures. Waste treatment is also considered a decommissioning activity, depending on the regulatory requirements for material disposal and/or the wastes generated by decontamination. In addition to technical guidance, this document provides an overview of the decommissioning process, including planning, applicable regulations, and supporting activities (e.g., transportation and worker and environmental protection). This overview explains the background and organization of this document, briefly mentions the technical subjects addressed, and reviews the peripheral (nontechnical) considerations that must be addressed during a decommissioning project.

This document does not contain requirements that have to be followed during decommissioning, nor does it identify the administrative coordination that must be established with regulatory bodies. Nuclear facilities located in the United States of America are regulated by a variety of agencies: DOE regulates governmental facilities; the U.S. Nuclear Regulatory Commission (NRC) oversees most commercial facilities; and state regulatory agencies are responsible for other commercial facilities. Thus, a complete description of the regulatory environment applicable to all nuclear facilities is beyond the intent of this handbook. Nonetheless, applicable regulations that contain these requirements and coordination needs are identified.

The technical guidance provided herein includes a description of state-of-the-art mechanical and chemical processes available for decommissioning. This guidance is intended to provide a compendium of available or potentially available technologies as an aid so that the most appropriate ones can be selected to meet the specific needs of each decommissioning project.

This handbook is primarily a technology identification document; thus, the chapters identifying technologies are the focus of the handbook. To encompass the entire decommissioning project —including detailed planning requirements, funding, estimating, and decommissioning operations—is far beyond the scope of this handbook. The reader is referred to other documents for details involving these important elements of a total decommissioning project. Some of these documents are the DOE orders concerning D&D and cost estimation, the proposed guidance document under preparation for DOE headquarters, applicable NRC regulations, and the pending

codification of DOE orders regarding decommissioning in Title 10 of the Code of Federal Regulations (10 CFR).

The Remedial Action Program Information Center (RAPIC) provided research information on D&D to support the development of this handbook. RAPIC, a support group to the DOE Office of Environmental Restoration (ER) (EM-40), provides technical information support to all DOE ER programs, program participants, and the scientific community involved in environmental restoration activities. The use of RAPIC or other databases is recommended to obtain the most current information available for a specific technology described in this handbook or identified as part of an individual decommissioning project.

The *Decommissioning Handbook* was prepared concurrently with a guidance document that provides specific programmatic guidance for planning decommissioning for DOE-owned facilities. The programmatic guidance outlines the full DOE planning process for decommissioning. The technologies and methods outlined in this handbook can be used in concert with the guidance document to arrive at a comprehensive plan for a decommissioning project. The handbook was prepared as a tool to allow the reader to efficiently research decommissioning technologies by providing a single convenient resource.

For the purpose of this handbook, and as described in Sections 5.1 and 5.2.3, decommissioning is assumed to begin after the spent nuclear fuel has been removed from reactors and processed inventories of high-level radioactive waste have been removed from nonreactor facilities.

## 1.2 Handbook Background

The original *Decommissioning Handbook* was prepared in 1980 by Nuclear Energy Services (NES) under contract to DOE. This new *Decommissioning Handbook* represents a restructuring of the original handbook, to address significant technological advances and additional topics, including the following:

1. project planning,
2. regulatory requirements,
3. characterization,
4. remote technology, and
5. packaging and transportation.

The discussion of project planning in this handbook is general and can apply to both DOE-owned and nonDOE-owned facilities. The guidance document provides a more detailed, DOE-specific approach to project planning for decommissioning.

Because this handbook is a revision of the one authored by NES, material quoted, paraphrased, or summarized from the original is not delineated in the text by a reference. However, references cited in the original handbook have been transferred to this revision.

## 1.3 Handbook Organization

The *Decommissioning Handbook* consists of fifteen chapters, each of which focuses on a different aspect of the decommissioning process, and one appendix. Together these chapters provide a comprehensive technical guide for decommissioning activities. The handbook employs the author-date method for citing references, and references used within a chapter are listed at its end. It is the intent of the handbook to serve as a comprehensive, on-going reference manual. Therefore, references are also included which might serve as a source of further information to the user. Although these references are not necessarily cited within the text, they will function as a roadmap to additional information on the decommissioning process. A brief description of each chapter follows.

Chapter 1, Introduction—Introduces the reader to the *Decommissioning Handbook*, describes its purpose, provides its production background, and outlines its overall organization.

Chapter 2, Operational and Predecommissioning Activities—Explains the concept of facilitation, in which operations during the normal plant life affect the decommissioning and how these operations can ease the task of decommissioning. The aspects discussed include facility design, normal operations, maintenance and periodic shutdown procedures, safe shutdown, and surveillance and maintenance (S&M) (if required) between safe shutdown and decommissioning. This chapter also discusses the items in safe shutdown that should normally precede any decommissioning work.

Chapter 3, Decommissioning Project—Identifies the elements of the decommissioning project, which are broken down into four phases: assessment, development, operations, and closeout. A summary of considerations that should be included in each of these phases is presented.

Chapter 4, Decommissioning Plan—Gives an outline of the information that is required in the decommissioning plan in accordance with DOE requirements and commercial regulations.

Chapter 5, Regulatory Requirements—Identifies the federal regulatory bodies that govern the use and transportation of radioactive and hazardous materials and mixed waste. Applicable sections from DOE orders that govern decommissioning of government-owned facilities are listed, as are U.S. Department of Transportation (DOT) and NRC regulations. In addition, brief comments are made regarding appropriate legislative acts, enforced by the U.S. Environmental Protection Agency (EPA).

Chapter 6, Final Project Configuration—Emphasizes the importance of defining the final project configuration at the start of the planning process. The difference between the initial and final

configurations determines the material that must be disposed of during decommissioning. This information is shown to be basic to the definition of a characterization program.

Chapter 7, Characterization—Discusses the information-gathering process (most often involving sampling and measurement) used throughout the decommissioning project. Characterization is needed from the time of the preliminary assessment of site hazards through the detailed measurements supporting engineering and waste certification to the final site survey. Guidance is provided for developing a characterization plan, and measurement technologies are described that are adaptable for use in the field or in a laboratory on a decommissioning site.

Chapter 8, Waste Treatment—Discusses various waste treatment methods and equipment for various waste streams. Waste may be present at the start of decommissioning or may be generated by decontamination activities.

Chapter 9, Decontamination—Identifies various chemical, mechanical, or other technologies that are available for decontaminating equipment and structures at a decommissioning site. A description of the process and its potential applications is provided. The techniques presented vary, from common practices to emerging technologies.

Chapter 10, Dismantling, Segmenting, Demolition—Presents techniques that can be used to dismantle (i.e., physically remove material from a building), segment (i.e., divide components into pieces), and demolish a facility. For each technique identified, a description of the process and its applications is presented. Techniques presented vary, from the use of common hand tools to emerging technologies that are currently under development.

Chapter 11, Remote Handling Equipment and Operations—Describes remote technologies that can be used in a decommissioning project. Examples are provided showing how remote technology has been utilized in past decommissioning projects. The rationale for choosing remote technology and the ranges of its application are discussed.

Chapter 12, Worker Protection—Highlights the importance of worker protection, explains the difference between worker protection at a decommissioning project and at other types of projects, and identifies the issues necessary to ensure that worker protection is properly implemented during decommissioning.

Chapter 13, Environmental Protection—Discusses regulatory standards and protective measures for air, surface water, and groundwater, as well as site release criteria and environmental monitoring.

Chapter 14, Packaging and Transportation—Stresses the importance of packaging and transportation in decommissioning and presents an overview of packaging and transportation of radioactive, hazardous, and mixed waste. Identifies the federal regulatory bodies that govern these activities, as well as the regulations; however, this chapter is not to be used as a substitute for the regulations themselves.

Chapter 15, Decommissioning Cost Estimates and Schedule—Presents the key elements that are required to prepare a cost estimate and project schedule. A methodology is also presented that shows how these elements are related.

Appendix, Estimation of Radioactive Inventory—Provides information that the reader can use to predict the quantities and identities of radioactive materials in the facility. The appendix includes the calculation of activation of materials under neutron bombardment, discusses transport of radioactive materials from the source throughout the facility, and describes methods for calculating the resulting radiation dose rates. The appendix also describes verification of the calculated results by actual measurement and it provides a method to estimate inventory based on field measurements.

Glossary—Includes a glossary of governmental and industrial terms used in this handbook.

# 2.0 OPERATIONAL AND PREDECOMMISSIONING ACTIVITIES

This chapter provides information on the practices and operations that precede decommissioning which may affect decommissioning. It describes operating and shutdown practices and the desirability of considering decommissioning during physical plant design and of considering how these items may ease the eventual decommissioning. This information may aid the planner by identifying that documentation is available to assist in preliminary site characterization and identification of decommissioning limitations and restrictions. The planner would use the information in this chapter to identify the existence of backup material that will be of interest and use in the planning of the decommissioning project. These materials include operating records, as-built drawings, operator interviews, process knowledge, and site walkdowns.

Some of the operational and predecommissioning activities that can affect decommissioning are discussed in the following sections. The aspects discussed are (1) facility design; (2) normal operations including maintenance and periodic shutdown, (3) safe shutdown, and (4) S&M after shutdown. Proper management of each of these aspects affects the ease of performing the decommissioning of the nuclear facility. Consequently, each of these aspects should be addressed during the life cycle of the facility to provide for a decommissioning project that is cost-effective. It should be noted that extra activities performed before the actual decommissioning may be included in the cost of decommissioning, but they are not really part of the decommissioning project.

## 2.1 Facility Design

For years, the goal in designing nuclear facilities has been to allow operations, maintenance, and decommissioning activities to proceed safely and in a time- and cost-efficient manner. For example, facilities that have been designed for ease of maintenance during operations generally yield cost savings over the operating life of the facility as well as efficient and economic decommissioning.

Conversely, facilities that were not designed for ease of maintenance or that were designed before the techniques for contamination prevention were available are usually more difficult and costly to decommission. For example, if a nuclear facility had areas constructed of bare concrete that became contaminated, the contamination would be embedded within the concrete, and decontamination of the surface of the concrete would be difficult or expensive. However, if the bare concrete were coated with a material that prevents the transport of contamination into the concrete surface, the routine decontamination and eventual decommissioning of the concrete would be easier and less expensive. Similarly, pipe routings, pumping equipment, and many other types of process equipment can be designed to minimize crud traps, resulting in lower occupational radiation exposures around high-maintenance equipment and subsequent lower costs that may be incurred during decommissioning and waste disposal.

As-built drawings are an important form of record keeping. These drawings detail the current configuration of the facility, which may differ from the design configuration. It is essential in

decommissioning that as-built drawings are kept up to date and are used to the maximum extent possible to avoid work-arounds and safety hazards. For example, during the facility life cycle, a room may have been transformed into a hazardous waste storage area, which would not be indicated on the design drawings.

Design trade-offs are considered in the initial design phase of the facility. A design trade-off is considered when a design can be changed to facilitate maintenance or decommissioning activities. For example, a storage tank located in a poured reinforced concrete room would be difficult to access for decommissioning. An alternative design that would provide easier access would be preferable from a decommissioning standpoint, for instance one nonload-bearing wall could be built out of easy-to-remove block. Further discussions on this technique, called facilitation, can be found in NUREG/CR-0569 (1979).

## 2.2 Normal Operations

If, during the life cycle of the facility, operations were performed to minimize the release of contaminants to the facility or the environment, the facility would stay reasonably clean, which minimizes the costs of cleanup and exposures. Thorough health physics routines and environmental monitoring during operations are key components of this practice. Through these measures, the spread of contamination on site and migration to off-site areas can be identified, corrected, and remediated. As a result, the magnitude and extent of the required cleanup during decommissioning are reduced. Additional aspects to be considered for the minimization of radiation exposure and other radioactive considerations are found in NRC Regulatory Guide 8.8 (1978).

Conversely, if facility operators do not concern themselves with releases from the process systems to the facility or the environment or if historical practices, which are no longer acceptable today, allow releases, then the facility becomes contaminated. By the time a decommissioning project is finally implemented, the facility and its surrounding environment—including the groundwater, surface water, and soil—could be quite contaminated. Therefore, the task of decommissioning is expanded by the extensive contamination of the facility and its environs.

Recordkeeping is just as important to the eventual decommissioning as it is to-day-to-day operations. Records of leaks, spills, and discharges "tell a story" of the plant operational history that could indicate potential hot spots. This type of information may limit or prevent surprises that could endanger workers and increase the cost of decommissioning. By regulation, this type of recordkeeping is already required for commercial facilities.

### 2.2.1 Maintenance

A well-designed and operated nuclear facility should have a maintenance program that prevents significant leakage or release of hazardous or radioactive materials from the process system and should have designs in place that minimize the effects of accidental releases to the facility. For

example, equipment with a high-leakage probability should have collection systems to prevent leaking fluids from draining onto an unprotected floor. Moreover, if fluids are released to the facility, procedures should be implemented to minimize the occupational exposure to hazardous or radioactive materials through containment of these materials or prompt cleanup.

Conversely, a maintenance program that is not directed toward minimizing contaminant releases will permit the spread of contamination and thus create difficulties during decommissioning. "Production only" maintenance (maintenance done only to support continuing operations) may not be consistent with as low as is reasonably achievable (ALARA) objectives, worker protection, environmental cleanup, or decommissioning.

A good maintenance program will keep legible, retrievable records of all maintenance activities. Similar to the recordkeeping in operations, these records tell a story. A component with a history of repair may indicate that the system or area with which it is associated may require a higher degree of awareness during characterization.

### 2.2.2 Periodic Shutdown

A well-designed, operated, and maintained nuclear facility should have periodic scheduled shutdowns to inspect equipment, perform preventative maintenance, replace equipment approaching the end of its operational life, and perform other housekeeping activities to maintain the facility in such a state that process materials or contaminants are not allowed to be released to the facility or its environs. If such shutdowns are not performed, leaks and other releases are likely to be generated that would contaminate the facility and its surroundings. Therefore, periodic shutdowns for nuclear facilities are an integral part of safe, clean operations.

The difficulties encountered and knowledge gained during shutdown (e.g., the removal of a component) should be recorded, so that this experience can be passed on to the decommissioning planner. These records can also help personnel better understand the history of the facility and identify potential problem areas.

## 2.3 Safe Shutdown

At the end of the nuclear facility's operating life, the facility is prepared for decommissioning. In nuclear reactor facilities, this means that the nuclear fuel is removed. For some reactors, the spent nuclear fuel would be accepted for processing or disposal by DOE. For other reactors, the spent nuclear fuel would be stored in independent spent fuel storage installations (ISFSIs), licensed under 10 CFR 72 (1993) until the fuel could be accepted for processing or disposal by DOE. In either case, the decommissioning project does not have to handle spent nuclear fuel. During safe shutdown, the process systems in nuclear reactor and nonreactor facilities are emptied and flushed. Filters and other such equipment that contain radioactive or hazardous materials are removed and disposed of as was done during facility operations. At the end of safe shutdown, the process systems are clean and all process materials have been removed. Therefore, except for some sludges and residues that could not be removed as part of the safe shutdown operation,

the decommissioning project is presented with a facility that is cleaned of all process materials. The operations in safe shutdown remove the residuals of the process materials and any hazardous materials included in the processing systems; however, hazardous or toxic materials that are part of the physical plant, such as asbestos, are not removed.

The shutdown of some nuclear facilities has not always included the steps outlined above. In these cases, the first task to be completed before decommissioning can begin is to remove and characterize the remaining process material and treat or dispose of it as was done during facility operations. Thus, the decommissioning actually begins with the unfinished portion of safe shutdown. These activities would artificially increase the apparent cost of decommissioning, but these additional costs are not really part of decommissioning.

## 2.4 Surveillance and Maintenance After Shutdown

For some nuclear facilities, there will be a period—after shutdown and before the actual decommissioning—during which S&M is performed. During this period, the facility requires S&M to ensure that the process equipment does not fail and release any residual materials. During S&M, records should be kept to identify systems and/or components that may be deteriorating and to inform decommissioning personnel about the potential hazards with which they are dealing. In addition, S&M is required to ensure that the facility itself does not release any contaminants to the environment. Adequate S&M must be maintained for the entire period between shutdown and decommissioning. The associated costs are not necessarily allocated to the decommissioning of the facility, although the decommissioning cost estimate may include them.

## 2.5 Conclusion

In summary, facility design, including the layout of equipment, facility operations and maintenance, and periodic shutdown for maintenance, can provide optimum operations and economics during the plant operation. These same items also result in a nuclear facility that is not significantly contaminated and that has not caused significant environmental contamination to the groundwater, surface water, soils, or atmosphere, all of which directly affects the cost of decommissioning that nuclear facility. A well-run, clean nuclear facility results in an easy and low-cost decommissioning project. Conversely, a poorly run or contaminated facility and environs presents a difficult and expensive decommissioning task.

The complexity and cost of a decommissioning project are minimized if effective contamination controls are applied during operations and maintenance activities and if safe shutdown activities are performed systematically and thoroughly.

## 2.6 References

10 CFR 72. Revised January 1, 1993. *Licensing Requirements for the Independent Storage of Spent Nuclear Fuel and High-Level Radioactive Waste.* U.S. Government Printing Office. Washington, D.C.

NRC (U.S. Nuclear Regulatory Commission). Revised June 1978. *Information Relevant to Ensuring That Occupational Radiation Exposures at Nuclear Power Stations Will Be as Low as is Reasonably Achievable.* Regulatory Guide 8.8. U.S. Nuclear Regulatory Commission. Washington, D.C.

NUREG/CR-0569. December 1979. *Facilitation of Decommissioning of Light Water Reactors.* U.S. Nuclear Regulatory Commission. Washington, D.C.

# 3.0 DECOMMISSIONING PROJECT

A decommissioning project is performed on a nuclear facility to remove the radioactive and hazardous materials so that there is no longer a risk to human health and the environment. This chapter provides a brief overview of a typical decommissioning project and identifies the various steps required to take the project from the beginning (at the facility's end-of-life) through decommissioning planning, decommissioning operations, and closure. This chapter is not intended to be used as a planning outline for decommissioning projects; other documents are designed for that task. It is intended to alert the reader to many of the activities that are required for a decommissioning project.

The purpose of describing a total decommissioning project is to provide an indication of the activities required to successfully decommission a nuclear facility. These activities include the assessment of the decommissioning alternatives, the development of the work to be described in the Decommissioning Plan, the actual decommissioning operations, and the final closeout of the project. This chapter is arranged to discuss each of these activities in general and then in particular. Section 3.1 describes the alternatives for decommissioning and the objectives of the decommissioning project. Section 3.2 discusses the typical phases of a decommissioning project, from assessment and development to the operations and final closeout. Sections 3.3 through 3.6 provide more details on each of these phases.

## 3.1 Decommissioning Overview

Once the nuclear facility is near or at the end of its useful life, the facility owner begins the preparation for removing radioactive and hazardous material. Before any decisions can be made for decommissioning the facility, both the risk and final goal of decommissioning should be identified.

Radioactive and hazardous materials remaining in the facility should be identified first. Strictly speaking, for commercial nuclear facilities, only enough of the radioactive materials must be removed to allow unrestricted release of the facility and its license termination. However, the removal of hazardous materials is also included in decommissioning for practical reasons. Process knowledge or actual measurement is required to identify the contamination. This identification using measurements or process knowledge is the *characterization* of the nuclear facility. For a facility currently in use, much, if not all, of the characterization information may be already available. If not, sampling and measurement should be performed to identify and quantify the risks. This information is essential for subsequently determining whether a proposed alternative adequately addresses the risks.

The final goal of decommissioning should be identified second. This incorporates the alternatives to decommissioning. Essentially, there are only three ultimate endpoints for the decommissioning of a nuclear facility. These alternatives are explored in the following sections.

### 3.1.1 Decommissioning Alternatives

The alternatives for the decommissioning of nuclear facilities are embodied within the NRC's definitions of *SAFSTOR*, *ENTOMB*, and *DECON*.

- *SAFSTOR* is the method by which the nuclear facility is placed and maintained in a condition that allows it to be safely stored and subsequently decontaminated (deferred decontamination) to levels that permit release for unrestricted use.

- *ENTOMB* is the method by which radioactive contaminants are encased in a structurally long-lived material, such as concrete. The entombed structure is appropriately maintained, and continued surveillance is carried out until the radioactivity decays to a level permitting unrestricted release of the property.

- *DECON* is the method by which the equipment, structures, and portions of a facility and site containing radioactive contaminants are removed or decontaminated to a level that permits the property to be released for unrestricted use shortly after cessation of operations.

The final goal for the decommissioning of nuclear facilities generally includes some combination of these three ultimate decommissioning methods. Typically, three or more alternatives are identified and evaluated to enable the owner of the nuclear facility to choose the best in terms of risk reduction to human health and the environment, cost, and other factors that are important to the owner of the facility.

Defining the final site configuration is the beginning of the decommissioning planner's logical approach. All subsequent planning should be directed toward achieving that final product. The importance of this step in decommissioning planning is discussed in Chapter 6.

Once the final goal has been identified, the steps leading to that goal have to be determined and developed. This process of working from the final goal will be iterative, because any single task in the decommissioning may result in an inconsistency with the desired final goal. For example, disposal capability for a specific waste may not be available, requiring that another treatment technology be considered. Similarly, a proposed decontamination process may generate a waste that requires the addition of a costly treatment facility, suggesting to the planner that either an alternative decontamination technique or direct disposal should be considered.

Knowledge of the availability of waste disposal capacity is important to the planner. Such knowledge includes the locations for waste disposal, the waste acceptance criteria, and costs associated with the disposal of the wastes. Cost considerations may drive the planner to include additional decontamination or waste treatment processes. Estimating the significance of costs that might arise, in comparison with other decommissioning costs, is addressed in Chapter 15. Other

factors may be identified during planning that may require consideration or provide helpful insight for planning. For example, the need to meet waste acceptance criteria may define the decontamination or treatment processes required. Also, knowing the waste acceptance criteria provides the basis for deciding what instruments and methods to specify for waste characterization.

Characterization is a prerequisite for defining the final goal of the decommissioning program. In addition to knowing what the final product is to look like, the decommissioning planner needs to know the characteristics of the material at the beginning of the project. Chapter 7 discusses the characterization required initially and the characterization required to demonstrate compliance with acceptance and release criteria.

### 3.1.2 Decommissioning Objectives

The first objective to be considered in decommissioning planning is to manage the risks posed by the facility. Usually, the primary risk is considered to be that posed by radiation, but it also includes the risks from hazardous and toxic materials and mechanical risks (i.e., collapse). For materials, risk management may be accomplished by destroying the contaminant (i.e., incineration of hazardous organic chemicals), immobilizing the contaminant in place, or removing it for disposal in an appropriate waste management facility. Mechanical risk is generally mitigated through structural analysis; however, it could be as simple as construction of a fence around the area of risk.

A second objective is to minimize the amount of waste generated and the creation of wastes requiring special (i.e., complicated and/or expensive) treatment, particularly transuranic (TRU) waste and mixed waste. This objective is usually accomplished by decontaminating some of the material so that the cleaned portion can be recycled in the economy or at least disposed of in a less restrictive manner [i.e., in a low-level radioactive waste (LLW) disposal facility or a sanitary landfill].

A third objective is to minimize the decommissioning costs. Many methods are available for managing the risks from a facility, and in choosing one, the planner should consider the cost and cost-benefit ratios. While the benefit from the remediation of risks increases as more work is performed (and money expended), the law of diminishing returns requires that the rate of increase per unit of work decreases. Thus, one has to choose between riskier, low cost options and those options that reduce all the risks to acceptable levels, but result in exorbitant project costs. The alternatives for selection usually include many choices between these two extremes.

While decommissioning activities are often similar to maintenance work in nuclear facilities, they are significantly different in one important aspect. That is, for decommissioning one does not have to consider the reassembly and reuse of the materials removed. Pipes cut in a maintenance operation are done carefully to avoid creating heat affected zones and to simplify the later preparation of the edges for rewelding. In contrast, removal during decommissioning is done as easily and quickly as possible, and the only concerns are worker safety and the prevention of

contamination of other parts of the facility. It is important to realize that the reestablishment of the systems is not a priority in decommissioning.

## 3.2 Project Overview

Management of the risks from a nuclear facility at the conclusion of its operational life can be approached systematically by breaking down the process into four phases. In effect, these phases involve deciding what to do, planning the decommissioning activity, performing the physical acts of decommissioning, and verifying that the risks from residual radioactivity have been reduced to project goals. These four phases have been named *assessment*, *development*, *operations*, and *closeout*.

### 3.2.1 Assessment

There are two major parts to the assessment phase: preliminary characterization and the review and decision-making process. Characterization is needed to develop project baseline data, which should include sufficient chemical, physical, and radiological characterization to meet planning needs. The data to be gathered include the following:

- construction photographs, drawings, and additional documentation showing the as-built (if they exist) state of the facilities;
- the status of all buildings, including changes from original construction, presence and condition of cranes, condition of protective barriers and safety systems;
- the location, type, and amount of hazardous, radioactive, and toxic substances left on the site from previous operations;
- data about unique features of the sites that could determine which decommissioning methods (entombment, safe storage, decontamination) would be appropriate;
- presence and location of physical obstructions such as overhead utilities, narrow doorways, and location of asbestos;
- the status of pressurized systems such as gas, water, and air; and
- the status of the breathing air system (if one exists).

After the condition of the facility is established, appropriate studies will be performed. Based on the conclusions of these studies, possible decommissioning alternatives will be analyzed and the best alternative chosen.

### 3.2.2 Development

After a decommissioning alternative is chosen, detailed engineering will begin following appropriate regulatory guidance. A Decommissioning Plan is then compiled and submitted to the appropriate regulatory agencies for approval. The plan will include characterization information; review of the decommissioning alternatives; justification for the selected alternative; provision for regulatory compliance; predictions of personnel exposure, radioactive waste volume, and cost; and other items as detailed in the contents of Decommissioning Plans, included in Chapter 4.

### 3.2.3 Operations

The decommissioning project is performed fully adhering to the guidelines defined in the approved Decommissioning Plan, and wastes generated during decommissioning are managed according to applicable regulations. Operations include health physics control, decontamination, dismantlement, demolition, waste management, plant modifications, transportation, and disposal.

### 3.2.4 Closeout

The final chemical and radiological surveys, as well as a Project Final Report, are produced at the conclusion of the decommissioning project. The final report includes details of the project, lessons learned, the final condition of the site, and references to the supporting documentation. If the site is not released for unrestricted use, the report will also include items specifically related to the restricted release, such as the long-term monitoring and maintenance requirements.

## 3.3 Assessment Phase

The assessment phase of a decommissioning project is the phase where preplanning is conducted, as well as preliminary site characterization. An evaluation is performed to determine which regulatory requirements will be applicable to the decommissioning activities, the financial requirements, the disposal options, and the technology alternatives. The following sections discuss the elements that comprise the assessment phase.

### 3.3.1 Regulations Supporting Assessment

It is important to research the regulations that affect the selection of a decommissioning alternative. The Comprehensive Environmental Response, Compensation and Liability Act of 1980 (CERCLA) provides requirements for deciding which of several alternatives should be chosen for remediation. EPA has published guidance documents, such as *Guidance for Conducting Remedial Investigations and Feasibility Studies Under CERCLA*, (EPA 1988) which present a methodology that can be adapted for use by the decommissioning planner.

NRC requires licensees to submit a preliminary decommissioning plan at or about five years before the anticipated start of decommissioning. The preliminary plan identifies the decommissioning alternative anticipated and provides evaluations of the major technical actions

- effectiveness in protecting environment;
- implementability;
- waste minimization;
- cost and cost-benefit ratio;
- public acceptance;
- compatibility with applicable or relevant and appropriate requirements (ARARs);
- ALARA considerations;
- future land use;
- socioeconomic impacts, such as employment and transportation; and
- cultural impacts, including aesthetics and historical and archeological considerations.

The facility owner/operator is the one who ultimately determines how well each criterion is addressed by the different alternatives and who decides how much weight to give to each.

Ideally, based on the evaluation process, a single alternative will be identified as preferable to all others for the decommissioning of the nuclear facility. In reality, two or more of the alternatives will likely score equally or close enough to prevent a reliable selection of the preferable alternative. In this case, more sophisticated assessments of the criteria, such as more detailed evaluation of the cost or risk, will be required to recommend a preferred alternative. The evaluation may even require an iterative process for evaluating existing alternatives or newly identified alternatives.

Once the preferred decommissioning alternative is identified, the detailed decommissioning engineering and planning tasks may begin. These tasks are described in the next section.

## 3.4 Development Phase

In the assessment phase of the decommissioning project, the final goal of the decommissioning is identified, initial characterization surveys are performed, risk assessments are evaluated, alternative assessments are made, and the decommissioning alternative is selected. The development phase continues the project by performing detailed engineering, cost estimating, and scheduling tasks and, finally, by preparing the Decommissioning Plan.

### 3.4.1 Decommissioning Engineering

Once the alternative for the decommissioning of the nuclear facility has been selected, detailed engineering, cost estimating, and scheduling occur. These tasks produce the technology and methodology for decommissioning the facility which will be described in the Decommissioning Plan. The following sections discuss these tasks.

#### 3.4.1.1 Detailed Engineering

At the beginning of the detailed engineering effort, the cleanup and residual criteria are finalized, and continued engineering is performed based on these finalized criteria. Discussions on the cleanup and residual radioactivity criteria are found in Chapters 5, 7, and 13. An independent verification contractor should be established early in the planning process if the regulatory agency itself is not performing the verification. It is essential that agreement on release levels, measuring standards, and techniques be established so that the final release verification is accomplished without disagreement with the regulatory agency. To assist in the engineering, information about the facility is gathered from its operating history, process knowledge, operating records, and as-built drawings, as well as operator interviews, other documentation, and site walkdowns. In addition, a comprehensive site characterization is performed as needed to support the detailed engineering effort. The content of a characterization plan is described in Chapter 7. Some characterization is usually done in each of the other three phases of a decommissioning project. Options for the disposal of radioactive waste, hazardous materials, and noncontaminated debris are known from the assessment phase.

The disposal options dictate the waste treatment, whose technologies are detailed in Chapter 8. These options likewise determine some of the decontamination, dismantling, or demolition techniques used in the decommissioning project. In addition, in some locations of the nuclear facility, access, radiation, or other causes may require the use of remotely operated equipment to perform the decommissioning activities. Technologies that can be used for the decontamination are described in Chapter 9; those for dismantlement, segmenting, and demolition are found in Chapter 10; and the technologies of remote operations are discussed in Chapter 11.

Throughout the detailed engineering, appropriate actions are designed to provide for the reduction of radiation exposure in the effort to keep exposures ALARA, maintain criticality safety (if applicable), and provide safeguards and security for the radioactive materials. Other activities that need to be addressed in the detailed engineering are provisions for monitoring and controlling emissions of radioactive and hazardous materials from the facility to the workers and the general public. These items are described more fully later in this chapter and in Chapters 11 and 12.

#### 3.4.1.2 Cost Estimating

A detailed cost estimate of the decommissioning project should be prepared based on the engineering details. The development of the cost should be based on experience with similar projects, standard costs in the industry for typical activities, and engineering judgment when no other information is available. The cost estimate will have a confidence level dependent on the relative information available and the significance of the bases of the estimate. Typical confidence levels range from +50% to −30% for the first iteration of the estimate to ±5% for the final cost estimate immediately before actual physical work. Two types of cost estimates will typically be calculated: unescalated and escalated. The *unescalated cost* is the total cost without any time dependence; this type of cost estimate is also known as *overnight cost*. The *escalated cost* of the project takes into account the length of time to perform the work and the prevailing inflation in costs as a function of time. Cost estimating methods are available in other documents and manuals; a brief overview of cost estimating is provided in Chapter 15.

#### 3.4.1.3 Scheduling

A detailed schedule for the decommissioning activities will be developed along with the cost estimate. The schedule and cost estimate are interdependent, because the actual cost including escalation is dependent on the schedule. Contingency can be put into the schedule as well as into the cost estimate itself. This practice provides for a recovery allowance for uncertainties that are covered by contingency in the detailed cost estimate.

### 3.4.2 Preparation for Decommissioning Operations

To prepare for the physical decommissioning, a decommissioning project organization needs to be developed and staffed. The decommissioning project organization may include the functions listed in Table 3.1. Depending on the size and complexity of the project, each function may contain from less than one full-time equivalent person to a staff of many individuals.

#### 3.4.2.1 Coordination

Coordination with various organizations is required throughout the decommissioning project. Besides the obvious coordination tasks of maintaining appropriate schedules between work in progress and specialty suppliers (including subcontractors performing work and disposal sites receiving wastes), coordination should occur between the project team and the various regulatory agencies providing oversight. Two major activities are (1) interfacing with the regulatory agencies during inspections and (2) establishing communications with them whenever there are activities that are of special interest.

**Table 3.1**
**Decommissioning Project Organization Functions**

| MANAGEMENT | | | | |
|---|---|---|---|---|
| **Engineering** | **Facility Operations** | **Health & Safety** | **Decommissioning Operations** | **Others** |
| Procurement | Utilities | Industrial Hygiene | Dismantlement | Environmental Protection |
| Site Release | Office & Personnel Accommodations | Health Physics | Decontamination | Material Control |
| Cost Control | Security | Safeguards | Waste Treatment | Personnel Relations |
| Scheduling | Shipping & Receiving | Accountability | Environmental Protection | Public Relations |
| Quality Assurance | | | Quality Control | Waste Management |

### 3.4.2.2 Documentation

Official documentation for the decommissioning project should start with the decision to decommission the nuclear facility. Major documents include the characterization report, any feasibility studies performed, the Decommissioning Plan, project progress reports, day-to-day radiological surveys and airborne sampling records, and the termination survey of the site. These documents, or similar ones, are required by the regulating agencies as part of the decommissioning process to release the site after decommissioning. These documents are public documents and will typically be available at the regulatory agency's public reading rooms or community public libraries.

The first report on the characterization of the facility is the characterization plan, which describes what contaminants are to be investigated and the methods involved in the sampling and analysis. The last report on the characterization of the nuclear facility is the characterization report, which presents the identity, location, and amounts of contaminants in the facility.

After the characterization is complete, there may be feasibility studies identifying alternatives to be examined for the decommissioning of the nuclear facility. There may also be an alternatives evaluation document to recommend the best alternative. In addition, a cost estimate document for the cost of performing the decommissioning is required for all decommissioning projects.

The Decommissioning Plan—including the technical details of the decommissioning, waste disposal, and final termination surveys documenting the release of the facility—is submitted to

and approved by the regulatory agency. Part of the Decommissioning Plan is the method for financing the project, which is dependent on the type of entity owning and decommissioning the facility. Only after the plan has been approved by the regulatory agency can the actual physical decommissioning tasks begin.

Depending on the size of the decommissioning project, project progress reports are prepared. These reports record current work tasks, estimates to completion, waste volumes disposed, materials released, and effluents released from the project.

At the conclusion of the decommissioning, a termination survey will be performed, which is documented in the termination survey document. As part of the termination survey report, documentation of the wastes disposed of, materials released, and effluents is required. This document is the final report verifying the adequacy of the decommissioning of the nuclear facility. The termination survey is typically be performed by a third party and approved by the regulatory agency.

#### 3.4.2.3 Public Relations

Decommissioning projects require some form of information exchange with the public. This exchange may simply be a part of the regulatory interface in the form of public meetings, or it may result from a directed effort on the part of the owner of the nuclear facility or the effort of public intervenors. Some decommissioning projects may be performed without the public ever really becoming aware of the project. These projects do not need a public relations effort to ensure their success. However, many decommissioning projects are subject to intense scrutiny from various segments of the general public. These projects can benefit from an active public relations program that informs the public of the project itself and the benefits of the decommissioning project to the community and society. This public relations program should begin early in the decommissioning planning, continue throughout the project, and not end until the final disposition of the site has occurred. The funds spent on the public relations effort will possibly avert even greater expenditures to answer public questions while the schedule for the project is delayed.

#### 3.4.2.4 Safeguards and Security

Decommissioning projects require a security plan to protect human health during the decommissioning and a safeguards plan, if appropriate. These plans are in addition to and complement the work plans for the actual decommissioning work tasks being carried out as part of the decommissioning project. Security is also required to prevent the loss or theft of materials and facility damage that could cause dispersal of radioactive materials sufficient to affect the safety of the public.

Decommissioning some nuclear facilities involves the disposition of fissile nuclear material (i.e., that nuclear material that can easily be fissioned). This material is termed Special Nuclear Material (SNM) in light of the fact that it can be used in the production of weapons. In a

decommissioning project that includes SNM, special procedures and precautions are required to prevent the diversion of SNM from the decommissioning project. These safeguards are identified in DOE Order 5630.11. In addition to safeguarding SNM from diversion, procedures are implemented to prevent criticality (i.e., the accidental establishment of an unintended self-sustaining nuclear reaction). Security requirements for the protection of SNM are necessary to ensure the safety of the material. Where possible, SNM should be removed from the site prior to starting decommissioning operations.

### 3.4.3 Management

Decommissioning Planning must also address such issues as permitting, worker and environmental protection, other plans, procedures, and training. Permitting and notification are elements of the coordination activity discussed in Section 3.4.2.1. Permits, for example, are required for facilities that treat Resource Conservation and Recovery Act (RCRA) wastes, for the discharge of wastewaters, and for installation of air pollution control equipment. EPA notification is required for asbestos removal activities, and an EPA generator number is required for shipment of hazardous waste. Provision for maintaining compliance with applicable regulations is important to both project cost and schedule. Chapter 5 identifies regulations that should be considered by the decommissioning planner.

The decommissioning logic should also include provision for essential staff functions, including the priority concerns for protection of the worker, the public, and the environment. Worker protection should include basic industrial safety, industrial hygiene, and health physics. Environmental protection provides for the monitoring of site effluents and shipments, as well as the demonstration that the final site conditions for compliance are met. Discussions of the requirements for worker and environmental protection are included in Chapters 12 and 13, respectively.

The assembly of a capable staff is another key to success. Appropriate management, technical, and administrative personnel need to be assigned responsibility for one or more of the functions listed in Section 3.4.2, and it is important to select people who are technically or professionally sound and who have related practical experience. These people should be assigned to the project early so that the other preparations can be effectively accomplished.

Providing written guidance for decommissioning work elements enhances the chance for a successful decommissioning project. This guidance can be in the form of manuals, procedures, and bid specifications. Manuals are most suitable for the operation of administrative functions, such as quality assurance (QA) and safety. Some procedures provide for the uniform application of policies defined in project manuals, while others, associated with physical decommissioning activities, ensure that critical thought and review are done prior to operations. Properly written bid specifications are essential for maintaining subcontractor cost control and ensuring that the desired work will get done.

Training is required to integrate the personnel, procedures, and equipment. Training must address both generic issues, like safety and security, and specific issues, such as the operation of a crane or a waste treatment system.

A standardized Project Management System can be utilized in the management of a decommissioning project. For U.S. government decommissioning projects, the Project Management System described in DOE Order 4700.1, Change 1, should be used for all aspects of the decommissioning project, including, but not necessarily limited to, management organization and responsibilities, work breakdown structure, logic schedule, cost and manpower estimates, quantitative performance criteria, systems engineering, and configuration management.

### 3.4.4 Decommissioning Plan Preparation

Once the detailed engineering for the selected alternative is complete, a formal Decommissioning Plan is written. The Decommissioning Plan includes all of the technical details of the decommissioning, the cost and schedule for it, the organizational structure and other administrative items required to successfully pursue the decommissioning, the funding details of the project, and other aspects of the decommissioning. The content and outlines for Decommissioning Plans for government-owned or -operated nuclear facilities, commercial nonreactor nuclear facilities, and commercial nuclear reactor facilities are included in Chapter 4.

An important item in this phase is the sequencing of operations. Sequencing affects not only the scheduling of activities, but also the coordination of different subcontractors who perform specialized activities, so the project is organized as efficiently as possible within the limitations of the site and tasks. For example, at the Shippingport Station Decommissioning Project, the boiler chamber on the west side of the building was demolished early in the project so that the area could be used for a tower crane that was required in the later stages of the decommissioning. Other projects have similar situations that affect the optimum scheduling and organization of the decommissioning.

Once the ultimate goals have been established, the technologies to perform the decommissioning have to be identified and sequenced. One of the first questions to ask is "What is the extent of contamination in the facility?" Not only does the planner need to know what the final goal is, but also what materials and conditions are present prior to decommissioning.

The characterization during operations identifies the types and quantities of materials that have to be removed during decommissioning. This characterization is done to help direct day-to-day work activities and to demonstrate compliance with acceptance criteria for waste and materials to be removed from the site as described in Chapter 7.

The characterization done during the development phase indicates whether the conditions at some locations in the facility preclude human presence because of extreme conditions, such as high radiation or accessibility. In these cases, remotely operated equipment would be employed to

perform the required tasks. The types of remote equipment and their capabilities are discussed in Chapter 11.

## 3.5 Operations Phase

The third phase in the decommissioning logic is the identification and sequencing of operations. Operations include activities related to the actual physical decommissioning of the nuclear facility. The key operational aspects that should be considered are operations on contaminated materials, on-site storage of materials awaiting processing or disposal, and packaging of materials for transport to processing or disposal facilities. Other elements important to operations are described in Chapter 12.

The contaminated material within the facility may require treatment before it is properly disposed of. This treatment may occur whether the material has been removed in whole or in part or is the residual contaminated material remaining in process systems. Types of residual materials found in a facility could include tank and equipment sludges, bulk fluids such as oil or fuel, and water systems that are required to maintain shielding. The technologies that are appropriate for any of the materials requiring treatment are included in Chapter 8.

Material that contains contamination is processed. The material may be simply decontaminated in situ, allowing that area to be reused. For example, a load-bearing column that is a vital part of the building structure can be decontaminated without destroying the building. The technologies used for decontamination of materials that remain in place are described in Chapter 9.

Another disposition of contaminated material may be removal, which would be used whenever the area being worked on has no function in the final configuration of the site. The material may be dismantled or segmented and carried off for disposition, or it may be demolished in place and the rubble carried off. The technologies that can be used in the removal of material from the facility are identified in Chapter 11.

A third option for the disposition of contaminated material is removal and decontamination. In this case the contaminated material is transported to a decontamination facility. The decontaminated material may be recycled or disposed of in a less restrictive manner. This procedure is a form of waste minimization and enhances the second decommissioning objective (See Section 3.1.2).

The decommissioning technology planning may indicate that the technology most suitable for some identified task or tasks has not yet been commercially produced, whether it be for waste treatment; decontamination; or dismantling, segmenting, and demolition. In other words, it may still be in the development stage. In this case, the decommissioning project may include at its start a technology development program. The decommissioning project would probably be responsible for funding the development, although other sources of funds might be available.

Therefore, the decommissioning cost estimate would have to be increased by the cost of the technology development program.

Preparation of areas for on-site storage of materials awaiting processing or disposal is required to allow efficient operations. In-process storage areas are required to accommodate materials as they are removed, so that materials from the next section can be accessed. These in-process storage areas may simply be transporters for moving material to the processing areas, or they may be designated laydown areas. In-process storage areas must meet specific regulations if the material is hazardous or toxic. If any materials are to be released for recycle or (re)use by outside commercial interests, special areas for their placement are required to simplify their release. Other storage areas are required as holding and staging areas for processing facilities, surveying, and packaging. These may need to meet the same requirements as in-process storage areas.

Packaging for transport is another area that is important during decommissioning operations. Special areas are required for packaging waste materials, their exterior contamination survey, decontamination (if required), weighing, documenting, and loading onto transportation vehicles. Many specifications and requirements relating to packaging and transportation of radioactive and hazardous materials leaving the decommissioning site are detailed in Chapter 14.

Given the proper planning at the outset of the project, the proper selection of technologies, and the proper application of the disposal options, the decommissioning project will succeed in producing the desired results.

## 3.6 Closeout Phase

*Closeout* is the final phase of a decommissioning project. It begins at the completion of physical decommissioning when it is believed that the site meets the defined release criteria for either restricted or unrestricted use. Closeout may be scheduled so that some surveying is done while decommissioning operations are still going on in other areas of the site. If this is done, measures are required to prevent the spread of contamination to already closed-out areas.

The purpose of the closeout phase is to verify that the site in its final configuration meets the release criteria established for the project. This closeout is performed by means of survey, verification, and documentation. Because the result may be challenged legally or in the public forum, it is necessary that closeout be performed with a high degree of rigor.

The radiation survey performed to meet closeout needs should be carefully planned to ensure that compliance can be demonstrated with the desired level of confidence. A prerequisite for the survey is the preparation of a sampling and analysis plan (Chapter 7) specifically for this closeout phase. The plan needs to identify the types and frequencies for measurements from buildings or areas remaining within the project boundary. Generally, stratified random sampling is used so that fewer measurements are required in areas known historically to have been essentially free of contamination (e.g., administration buildings). Guidance for preparing and conducting final

site surveys is given in NUREG/CR-2082 (1981) and a recent more detailed upgrade Draft NUREG/CR-5849. Titles of these NUREGs are given in Chapter 5.

The primary purpose of the sampling and analysis plan is to assess the quantity and distribution of residual radioactivity. In addition, if hazardous or toxic materials were present, the plan would need to assess the quantity of these substances remaining. The requirement to do this may be imposed by DOE, NRC, or the state; or the closeout phase may be subject to regulation by another agency (e.g., EPA).

Decontamination and waste treatment capability should be maintained during the survey phase in the event that contamination is found to exceed the release criteria.

The second component of the closeout phase is an independent verification of the verification survey. This is done by an organization independent of the facility owner. This organization is usually contracted by the regulatory agency, and reviews the final survey plan and results and makes its own series of measurements. This effort provides an independent verification of the owner's determination that the site complies with the release criteria. Differences between the final release survey and the verification survey are resolved by discussion or the performance of measurements jointly. If the verification survey does not support the conclusion "that the release criteria are met," additional remediation and survey may still be required.

The third component in the closeout phase is documentation of the final and independent verification surveys and other supporting calculations or correspondence. The methodology for this part is defined by the protocol or rules of practice of DOE, NRC, or the state. If the closeout phase is subject to regulation by others, those agencies' rules of practice need to be followed for that part of the closeout subject to their authority.

## 3.7 Conclusion

A decommissioning project can be complex and expensive. Previous decommissioning experience has shown that it can be viewed as occurring in the four phases discussed in this chapter. The assessment phase discussed in the first part of this chapter leads to the selection of a decommissioning alternative. The development phase is addressed in this chapter as well as in Chapters 4, 5, 6, and 15; and it includes the planning needed to carry out the selected alternative. The operations phase, or the performance of physical decommissioning, is the primary emphasis of this handbook. It is addressed in Chapters 8–11, and Chapters 12–14 discuss support services. The closeout phase is the demonstration that release criteria are met. Accomplishment of this is via the final site characterization, which is addressed as part of Chapter 7.

## 3.8 References

40 CFR 104. Revised January 1, 1993. *Public Hearing on Effluent Standards for Toxic Pollutants*. U.S. Government Printing Office. Washington, D.C.

40 CFR 121. Revised January 1, 1993. *State Certification of Activities Requiring a Federal License or Permit.* U.S. Government Printing Office. Washington, D.C.

DOE Order 4700.1. *Project Management System.* U.S. Department of Energy. Washington, D.C.

DOE Order 5630.11. *Safeguards and Security Program.* U.S. Department of Energy. Washington, D.C.

EPA (U.S. Environmental Protection Agency). October 1988. *Guidance for Conducting Remedial Investigations and Feasibility Studies Under CERCLA*. EPA/540/G-89/004. U.S. Environmental Protection Agency. Washington, D.C.

NRC (U.S. Nuclear Regulatory Commission). September 1989. *Standard Format and Content for Decommissioning Plans for Nuclear Reactors*. Regulatory Guide DG-1005. U.S. Nuclear Regulatory Commission. Washington, D.C.

NUREG/CR-2082. June 1981. *Monitoring for Compliance with Decommissioning Termination Survey Criteria.* U.S. Nuclear Regulatory Commission. Washington, D.C.

NUREG/CR-5849. *Guidance Manual for Conducting Radiological Surveys in Support of License Termination.* U.S. Nuclear Regulatory Commission. Washington, D.C.

# 4.0 DECOMMISSIONING PLAN

A decommissioning plan is a document required by the regulators that describes the method to be used in the decommissioning of a radioactively contaminated facility. It is prepared during the developmental phase of the project as described in Section 3.4. This chapter provides guidance for the preparation of decommissioning plans for both government and commercial nuclear facilities by combining information extracted from three applicable documents. The first is DOE Order 5820.2A, Chapter V, "Decommissioning of Radioactively Contaminated Facilities," which provides guidance for the decommissioning of DOE-owned or -operated nuclear facilities. The second is Regulatory Guide 3.65 (NRC 1989), *Standard Format and Content of Decommissioning Plans for Licensees under 10 CFR Parts 30, 40, and 70,* which provides guidance for commercial nonreactor nuclear facility decommissioning plans. Finally, draft Regulatory Guide DG-1005, *Standard Format and Content for Decommissioning Plans for Nuclear Reactors (NRC 1989)*, was used, which provides guidance for commercial nuclear reactor decommissioning plans.

## 4.1 Introduction

The subjects addressed in the three documents referenced in Section 4.0 were sorted to generate a hybrid outline for a decommissioning plan. While this outline does not conform to the organization of any of the three, it does address all the referenced subjects and offers a logical sequence of topics. This generic/hybrid outline for a decommissioning plan follows:

- I. Introduction
- II. Facility History, Characterization, and Status
- III. Alternative Selection
- IV. Decommissioning Activities
- V. Program Management
  - A. Organization
    1. Training
    2. Quality Assurance
    3. Technical Specifications
    4. Physical Security
    5. Procedures
    6. Role of Contractors
  - B. Cost
  - C. Schedules
- VI. Worker and Environmental Protection
  - A. Health Physics Program
  - B. ALARA Practices
- VII. Waste Management
- VIII. Final Survey Plan

The next section in this handbook provides additional information about the contents desired for each subject.

## 4.2 Elements of a Decommissioning Plan

The following sections paraphrase guidance for addressing the various topics needed in a decommissioning plan.

### 4.2.1 Introduction

This section should contain identifying characteristics of the facility and a brief narrative description of the decommissioning plan proposed. Such topics as decommissioning alternative selected, final estimated cost, amount of available funds, major activities and schedules (in particular the estimated date for completion of decommissioning), items subject to quality assurance (controls and audits), activities that may be performed by the owner or contractors, and the final radiation survey plan should be included.

### 4.2.2 Facility History, Characterization, and Status

The planner should describe historical information on operational occurrences that could adversely affect decommissioning safety. Such things as spills or releases that resulted in significant residual radioactive contamination, the specific location of normally inaccessible systems and equipment that may contain high levels of radiation, and areas of the site that may contain excessive radioactive contamination should be included in the description. This type of information can be obtained from facility records and personnel familiar with the facility. This information is important to safety and should be considered when preparing plans and procedures for decommissioning activities. This should include a list of all locations in the facility where any work with radioactive materials was ever performed, the material that was involved, a description of the operations performed, and typical radiation and contamination levels during those operations. Maps and drawings of the facility showing all modifications made to radiological work sites during the life of the facility should be included. Description of operational occurrences that involved such things as spills, releases, or other accidents that resulted in significant residual radioactive contamination should also be included in the plan.

A part of this section should be devoted to describing the current status of the facility. Radiation levels of contaminated systems, structures, and components should be established. It is recognized that complete information may not be available at the time of submittal of the decommissioning plan. However, sources of radiation that are the basis for radiation protection should be described by either measurement or calculation. Information in this section should be updated as additional radiation surveys are made. Radiation sources should be described by dose rate and location; major sources of radioactivity should be located on plant layout drawings. For all sources, including neutron-activated sources, the basis for determining the radioactivity levels should be provided.

In addition, information on the current status can be provided using drawings, photographs, and other records reflecting the as-built and as-modified condition of the facility and grounds. The condition of all structures, existing protective barriers, and systems installed to ensure public, occupational, and environmental safety should be described. The type, form, quantity, and location of hazardous chemicals also should be specified.

### 4.2.3 Alternative Selection

This section should include a summary evaluation of decommissioning alternatives for the facility including the preferred alternative.

For an electric utility licensee, if the planned method will result in completion of decommissioning more than 60 years after cessation of operations, an evaluation of the factors causing this delay should be presented. For NRC licensees other than an electric utility, if the planned method will result in delayed completion of decommissioning, an evaluation of the factors causing this delay should be presented. Requirements on the length of time decommissioning may last and the factors to be considered in evaluating requests for longer than normal delays is contained in 10 CFR 50.82(b)(1).

### 4.2.4 Decommissioning Activities

In this section, the planner should indicate the decommissioning objective and discuss how the proposed activities will achieve this objective and the reasoning used to select particular methods to be used in the decommissioning. The planner should list or tabulate the major activities related to processes, systems, equipment, and land to be decommissioned.

For reactors, the planner should list or tabulate activities related to decommissioning safety. For major activities involving radiation, an estimate of occupational dose, in person-rem, to complete the activity should be provided. This should include such activities as removal and shipment of the reactor vessel and internals; the dryer and separator; the sacrificial shield; and contaminated piping, equipment, and concrete in the containment, auxiliary or radioactive waste building, and turbine building (for boiling water reactors), as well as decontamination of systems and operation of the liquid and solid radioactive waste systems. A table should be submitted that lists each activity and associated exposure, in person-rem, and total cumulative exposure for the entire decommissioning effort. It is important that ALARA be considered in the initial planning of activities.

If SAFSTOR or ENTOMB is selected, activities related to preparing the facility and site for storage should be provided in detail. Activities for maintaining the facility and site in safe storage or following entombment and for final decommissioning should be described to the extent known.

This section should also include a discussion of accidents that could significantly affect occupational or public health and safety during decommissioning that are significantly different

from those evaluated for plant operations or maintenance. Sufficient detail should be included so that significant potential accidents will be revealed and analyzed. The analyses should show that decommissioning can be accomplished in a safe manner.

### 4.2.5 Program Management

This section contains detailed administrative, cost, schedule, and management information.

#### 4.2.5.1 Organization

The decommissioning organization and responsibilities with respect to the overall project should be described. The licensee should identify key positions in the decommissioning organization and describe their functions. The lines of authority up to the corporate level should be indicated. The education, training, and experience requirements should be described for positions important to decommissioning safety. The person with ultimate on-site authority should be designated by position. Additionally, the decommissioning organization should include a corporate radiation committee (or equivalent) to monitor the decommissioning operation to ensure that it is being performed safely. The committee should review and audit major decommissioning operations dealing with special nuclear material, radioactive material, radiological controls, review procedures, records, reportable occurrences, and changes. The committee should be responsible to high-level corporate management.

Training: This section should contain a description of the training program, including general and specific radiological safety training for operators, contractor personnel, and other personnel. The description should include the scope of training in decontamination and other decommissioning activities, health physics, and the use and maintenance of radiation surveillance and monitoring equipment. The background and experience of people performing the training should be given. This section should also contain a description of the system for maintaining records of training received by personnel.

Quality Assurance: In this section the planner should describe the QA program to be established and executed during decommissioning. The equipment, such as plasma torches, portable ventilation, shielding, and procedures that will be subject to the QA controls and audits should be listed. The QA program should be established at the earliest practical time consistent with the schedule for accomplishing an activity. The positions and responsibilities for review and audit should be specified.

Technical Specifications: In this section the controls and limits on procedures and equipment to protect occupational and public health and safety should be specified. They should be derived from an analysis of the health and safety and environmental assessment of decommissioning the facility. The analysis should lead to the conclusion that the health and safety of the public and decommissioning personnel will be protected if all operations are performed within certain prescribed limits. Limits selected for a commitment to action should be specified.

Not all controls and limits on procedures and equipment to protect occupational and public health and safety during the active decommissioning phases, particularly for dismantlement procedures, need to be in the form of technical specifications; such procedures should provide some flexibility for changing conditions and possibly unforeseen factors. Care should be taken to structure technical specifications for decommissioning in such a way that they would automatically adjust or be discontinued as appropriate if conditions change. In this way, the need for repeated requests for modifications or elimination of technical specifications can be avoided.

Physical Security: For NRC licensees, when applicable, a description of and a schedule for any proposed changes to the NRC-approved physical security plan and special nuclear material control and accounting plan should be provided in this section. If not applicable, a notation to this effect should be entered in this section.

Procedures: The planner should state a commitment to conduct decommissioning activities in accordance with written procedures approved by management. The control system that ensures that written procedures are prepared, reviewed, revised, approved, and implemented should be described.

Role of Contractors: The owner or licensee may choose to accomplish some or all decommissioning activities by using contractors. However, the responsibility for safety during decommissioning rests with the owner or licensee. For each contracting organization, the scope of work, the contractor qualifications to perform work with radioactive material, and administrative controls to be used to ensure adequate health and safety protection should be described. The owner or licensee should indicate which activities will be performed under subcontractor licenses and indicate the name, address, and license number of the subcontractor.

#### 4.2.5.2 Cost

In this section the planner should present a cost estimate based on the detailed description of activities. NRC licensees who have already submitted a prior cost estimate should present an updated cost estimate as part of the decommissioning plan, while licensees who had submitted either a certification or made no formal submittal must now submit a detailed cost estimate. The licensee is to show how adequate funds for the completion of decommissioning will be made available. A comparison of the cost estimate made in this section with present funds is to be provided. If there is a deficit in present funding, the licensee should include a description of how sufficient funds for decommissioning will be made available. Guidance on funding is being developed in Regulatory Guide 1.159, "Assuring the Availability of Funds for Decommissioning Nuclear Reactors, August 1990." If either SAFSTOR or ENTOMB is selected and justified, the licensee should describe the plan to provide reasonable assurance that adequate funds will be available when needed to complete decommissioning.

#### 4.2.5.3 Schedules

For major activities, the relationship between activities should be shown. Where pertinent, the schedules for accomplishing interrelated activities should be delineated. Schedules or diagrams should clearly indicate the estimated time for completion of decommissioning.

### 4.2.6 Worker and Environmental Protection

This section should contain a description of the methods used to ensure protection of workers and the environment against chemical and radiation hazards during decommissioning.

#### 4.2.6.1 Health Physics Program

The organization's health physics program to be in effect during decommissioning should be described. The program should include administrative and technical details as well as quality assurance provisions such as audits, inspections, or management reviews.

The criteria for selecting equipment and instrumentation for performing radiation and contamination surveys and personnel monitoring, including special instruments for detecting low levels of radiation, should be provided in this section; the types of instruments to be used should be described. The use, storage, calibration, testing, and maintenance for these instruments should be described. The purpose (e.g., personnel monitoring, radiation surveys), range, and sensitivity should be described for each type.

The policy, methods, frequency, and procedures for effluent monitoring, conducting radiation surveys, and personnel monitoring (including internal and external dosimetry systems) should also be described. The anticipated use of respiratory protection should be explained. Methods for contamination control should be described, including anticontamination clothing, control of access to restricted areas, and ventilation systems for containment of airborne radioactive contamination (including anticipated use of special and temporary ventilation systems). The program for determining airborne radioactivity in work areas should be described. The program description should include locations of air samples, types of equipment, and frequency of sampling and analyses.

If appropriate, changes may be made to an existing program. However, the decommissioning plan should clearly indicate the contents of the existing program and present the additional information described in this section.

In addition, the health physics program should identify potential sources of radiation or contamination exposure to workers or to the public that are generated by the decommissioning activities themselves. The owner or licensee should specify how these potential sources will be controlled.

In addition, the planner should describe radiation protection policies for ensuring the safety of contractor personnel when they are working in restricted areas and the means of implementing these policies, projections of occupational exposure, and radiological criteria to be used. Knowledge from previous decommissioning reports and from the available literature should be addressed to show how it can be used to improve decommissioning designs and procedures.

#### 4.2.6.2 ALARA Practices

The planner should state the policy for keeping individual and collective occupational radiation exposure ALARA during decommissioning. Management positions responsible for radiation protection and maintaining occupational exposure ALARA during decommissioning should be described. If the planner can demonstrate that an existing ALARA plan or radiation protection program includes the ALARA information for this section, a separate ALARA plan for decommissioning would not be needed. Alternatively, the plan may describe modifications to an existing ALARA plan or radiation protection program.

This section should contain a description of those methods for occupational radiation protection specific to ALARA. This would include, for example, a work activity control program to minimize worker exposure (including the criteria for issuing and terminating radiation work permits), and a program to control the handling and storage of radioactive material.

### 4.2.7 Waste Management

Procedures, processes, and systems to be used for handling, storing, and disposing of radioactive waste should be described. The plan should show how the applicable disposal site restrictions for processing and disposal of low-level radioactive waste will be met. The plan should contain a projection of radioactive waste generation. This projection should include a detailed characterization of the wastes to be generated with projected volumes, radionuclide concentrations, waste forms and classification, and information on any significant quantities of special wastes such as chelates and mixed waste (i.e., mixed radioactive and hazardous wastes). If radioactive wastes are to be temporarily stored on-site, the quantities of waste, the expected length of storage, the location of storage areas, radiation levels at access points, and the manner in which positive control will be maintained should be described. If wastes from restricted areas are to be disposed by landfill or similar methods, the means for demonstrating that criteria for release for unrestricted use are met should be specified. If mixed waste generation is anticipated, the effect on work procedures and the decommissioning schedule resulting from compliance with EPA requirements should be indicated. The plan should indicate the extent to which the site has been previously used to dispose low-level radioactive wastes by land burial and indicate the remedial measures that are appropriate before the site can be released.

Finally, the planner should describe the systems used for waste treatment, including a discussion regarding concentrations of contaminants and volumes of waste to be treated. It should be indicated whether treatment would be done using existing systems (to be retained in an

operational status) or systems to be installed. Schedules discussed in Section 4.2.5.3 should clearly indicate the availability of these systems.

### 4.2.8 Final Survey Plan

This section should contain a description of the final radiation (and chemical, if applicable) survey. The final radiation survey plan should provide the basis for verifying that the facility, site, and the contiguous adjacent environs meet radioactivity levels that permit release for unrestricted or restricted use.

In this section the planner should submit a proposed final radiation survey plan. A description should be included that shows how the facility and site will be prepared to meet criteria for release. The description should include the proposed method for ensuring that sufficient data will be collected for a meaningful statistical survey and that all pertinent structures, systems, components, equipment, and the site and adjacent environs are included. Other discussions should address (1) the type and operating conditions of instruments to be used; (2) methods to be used to obtain and analyze data, including the methodology to be used to ensure that instrument readings or sample analysis will be appropriately translated into the units to be reported (e.g., dpm/100 $cm^2$, pCi/g of soil); (3) information on preoperational radiation survey results and other data on background radiation, and (4) methods to be used for auditing and verifying data.

The final radiation survey plan should demonstrate that a reasonable effort has been made to eliminate residual radioactive contamination. The planner should explicitly describe the radiation and contamination levels expected upon release of the facility and provide a justification if they deviate from existing or accepted guidance.

If SAFSTOR is planned, discussion of the final radiation survey plan may be general, with details submitted as part of an updated decommissioning plan prior to the deferred dismantlement. For ENTOMB, termination of the license should be able to be based on a characterization of contamination carried out during the entombment sufficient to calculate contamination levels that will exist in the entombed structure at the end of the surveillance period. If part of the site is to be released for unrestricted use at the time of preparation for safe storage or entombment, detailed plans for a radiation survey on which this release can be based should be submitted.

## 4.3 Conclusion

The decommissioning plan is a required document for the eventual decommissioning of the nuclear facility, whether government or commercial. Section 3.4 describes the preparation of the decommissioning plan and the suggested content and format of the document are contained herein. Chapters 5 through 15 of this handbook provide the information necessary for the development of the decommissioning plan.

## 4.4 References

DOE Order 5820.2A. *Radioactive Waste Management.* U.S. Department of Energy. Washington, D.C.

NRC (U.S. Nuclear Regulatory Commission). August 1989. *Standard Format and Content of Decommissioning Plans for Licensees Under 10 CFR Parts 30, 40, and 70.* Regulatory Guide 3.65. U.S. Nuclear Regulatory Commission. Washington, D.C.

NRC September 1989. *Standard Format and Content for Decommissioning Plans for Nuclear Reactors.* Regulatory Guide DG-1005. U.S. Nuclear Regulatory Commission. Washington, D.C.

Regulatory Guide 1.159. August 1990. *Assuring the Availability of Funds for Decommissioning Nuclear Reactors.*

# 5.0 LEGISLATIVE AND REGULATORY REQUIREMENTS AND OTHER APPLICABLE GUIDANCE

The regulations and requirements that are applicable to a decommissioning project are many and changing. Several nuclear facilities built in the 1940s and 1950s, under the Atomic Energy Act of 1954, have just reached or are approaching their design life concurrently with the publication of this handbook, and decisions will have to be made shortly regarding the management of the risks they pose. Because few of these facilities have been decommissioned, regulation and guidance are still in their infancy and are evolving to meet the coming need.

Regulations affecting decommissioning can be divided into three categories. The first category includes those regulations that directly affect decommissioning (e.g., the removal of radioactive materials as needed to reduce future risk). The second category are those regulations that protect the worker and the public from radiation during decommissioning operations. Third are the regulations that apply if hazardous or toxic materials that require remediation are present in the facility.

Sections 5.1 and 5.2 identify regulations applicable to government and commercial nuclear facilities, respectively. Sections 5.3, 5.4, 5.5, and 5.6 highlight applicable requirements of EPA, the Occupational Safety and Health Administration (OSHA), DOT, and Council on Environmental Quality (CEQ); and Section 5.7 lists guidance available through the International Atomic Energy Agency (IAEA).

## 5.1 U.S. Department of Energy-Controlled Nuclear Facilities

DOE is a cabinet-level department of the U.S. government. It is responsible for developing energy technology, federal power, energy conservation, the nuclear weapons program, energy regulatory programs, and a central energy data collection and analysis program. DOE Order 5820.2A, *Radioactive Waste Management,* is the requirement that stipulates that government-owned facilities be decommissioned. This Order establishes policies, guidelines, and minimum requirements by which DOE manages its radioactive and mixed waste and its contaminated facilities. Chapter V of this Order establishes policies and guidelines for decommissioning. This Order specifically excludes commercially generated spent nuclear fuel or high-level radioactive waste. Therefore, as indicated in the Introduction to this handbook, spent nuclear fuel and high-level radioactive waste are not included as part of decommissioning.

DOE Order 5400.5, *Radiation Protection of the Public and the Environment,* is also directly related to decommissioning. The Order is currently being codified in 10 CFR 834. In essence, this Order establishes standards and requirements under which DOE and its contractors operate while protecting members of the public and the environment against undue risk from radiation. This Order affects decommissioning in two ways. First, limits are given that govern the release of radioactive materials in the air or water during operations, including decommissioning. Second, Chapter IV of this Order defines the maximum amount of residual radioactive material that can remain after decommissioning. Figure IV-1 of this chapter gives the limits for residual

radioactive material on surfaces, and Section IV-1 of this part gives the guidelines for determining the level of allowable residuals in soil. The determination is based on an allowable dose and ALARA considerations, and pathway analyses are required to translate the basic dose limit into concentration limits for site soil. Guidance for performing pathway analyses are given in *A Manual for Implementing Residual Radioactive Material Guidelines* (DOE/1989).

Other DOE Orders that may affect decommissioning, depending on the particulars of any given project, follow.

1332.1 *Uniform Reporting System*—Establishes the DOE uniform reporting system for contracts, loans, and loan guarantees, and it provides implementing formats, forms, instructions, and procedures for information that is essential for effective management.

1540.1 *Materials Transportation and Traffic Management*—Establishes DOE policies and procedures for managing materials transportation activities, including traffic management.

1540.2 *Hazardous Material Packaging for Transport (Administrative Procedures)*—Establishes administrative procedures for the certification and use of DOE packaging for radioactive and other hazardous materials.

1540.3 *Base Technology for Radioactive Material Transportation Packaging Systems*—Establishes DOE policies and responsibilities for coordinating and planning base technology for radioactive material transportation packaging systems.

4300.1 *Real Property Management*—Establishes department-wide policies and procedures for the acquisition, use, inventory, and disposal of real property or interests.

4700.1 *Project Management System*—Establishes the DOE project management system and provides implementing instructions, formats, and procedures, and it sets forth the principles and requirements that govern the development, approval, and execution of DOE's outlay program acquisitions.

5400.1 *General Environmental Protection Program*—Establishes environmental protection program requirements, authorities, and responsibilities for DOE operations, to ensure compliance with applicable federal, state, and local environmental protection regulations; executive orders; and internal DOE policies.

5400.2 *Environmental Compliance Issue Coordination*—Establishes requirements for coordinating environmental compliance issues to ensure timely development and consistent application of DOE environmental policy and guidance.

5400.3 *Hazardous and Radioactive Mixed Waste Program*—Establishes DOE hazardous and radioactive mixed-waste policies and requirements and implements the requirements of RCRA within the framework of the environmental programs established under DOE Order 5400.1.

5400.4 *Comprehensive Environmental Response, Compensation, and Liability Act (CERCLA) Requirements*—Establishes and implements DOE CERCLA policies and procedures (within the framework of DOE Order 5400.1) as prescribed by the National Oil and Hazardous Substances Pollution Contingency Plan (NCP) and under the authorities of Executive Order 12580.

5440.1 *National Environmental Policy Act*—Establishes DOE responsibilities and procedures to implement the National Environmental Policy Act of 1969 (NEPA).

5480.1 *Environment, Safety, and Health (ES&H) Program for DOE Operations*—Establishes the ES&H Program for DOE operations.

5480.3 *Safety Requirements for the Packaging and Transportation of Hazardous Materials, Hazardous Substances, and Hazardous Wastes*—Establishes requirements for packaging and transporting hazardous materials, hazardous substances, and hazardous wastes.

5480.4 *Environmental Protection, Safety, and Health Protection Standards*—Provides requirements for applying the mandatory environmental protection, safety, and health standards pertinent to all DOE and DOE contractor operations; lists ES&H standards; and identifies the sources of mandatory and reference ES&H standards.

5480.5 *Imposition of Proposed Nuclear Safety Requirements*—Describes how necessary requirements are implemented in a manner which is coordinated with other safety-significant work.

5480.6 *Radiological Control*—Establishes DOE's Radiological Program and the framework for its implementation.

5480.7 *Fire Protection*—Establishes requirements for a comprehensive fire protection and related perils protection program sufficient to attain DOE objectives.

5480.11 *Radiation Protection for Occupational Workers*—Establishes radiation protection standards and program requirements for DOE and its operations with respect to the protection of workers from ionizing radiation.

5480.19 *Conduct of Operations Requirements for DOE Facilities*—Provides internal DOE requirements and guidelines for developing directives, plans, and/or procedures relating to the conduct of operations at DOE facilities.

5480.23 *Nuclear Safety Analysis Reports*—Establishes requirements for contractors responsible for the design, construction, operation, decontamination, or decommissioning of nuclear facilities to develop safety analyses that establish and evaluate the adequacy of the safety bases of the facilities.

5481.1 *Safety Analysis and Review System*—Establishes uniform requirements for the preparation and review of safety analyses of DOE operations, including identification of hazards, their elimination or control, assessment of the risk, and documented management authorization of the operation.

5483.1 *Occupational Safety and Health Program for DOE Contractor Employees at Government-Owned Contractor-Operated Facilities*—Establishes requirements and procedures to ensure that occupational safety and health standards provide protection for DOE contractor employees in government-owned facilities.

5500.3 *Planning and Preparedness for Operational Emergencies*—Establishes requirements for planning and preparedness for operational emergencies involving the DOE or requiring DOE assistance.

5630.11 *Safeguards and Security Program*—Establishes the policy and responsibilities for the DOE Safeguards and Security Program.

5633.2 *Control and Accountability of Nuclear Materials, Responsibilities, and Authorities*—Prescribes DOE policies, responsibilities, and authorities for control and accountability of nuclear materials.

5633.3 *Control and Accountability of Nuclear Materials*—Prescribes the DOE minimum requirements and procedures for control and accountability of nuclear materials at DOE-owned and -leased facilities and at other facilities that hold DOE-owned nuclear materials and that are exempt from licensing by the NRC.

5660.1 *Management of Nuclear Materials*—Establishes policy objectives and procedures for the management of nuclear materials within DOE.

5700.6 *Quality Assurance*—Establishes quality assurance requirements for DOE.

In the case of EPA regulations, DOE Orders provide information and guidance from EPA requirements so that DOE facilities and operations achieve equivalent compliance; and in the case of NRC rules, DOE Orders are intended to achieve equivalent results (NRC rules do not apply to DOE).

## 5.2 Commercial Nuclear Facilities

All commercial nuclear facilities are licensed under 10 CFR Parts 30, 40, 50, 61, 70, or 72. Commercial nuclear facilities are decommissioned as required by 10 CFR 30.35 for licensees holding byproduct licenses, 10 CFR 40.42 for holders of source material licenses, 10 CFR 50.82 for holders of production or utilization licenses, 10 CFR 61.28 for holders of licenses for land disposal of radioactive waste, 10 CFR 70.38 for special nuclear material licenses, and 10 CFR 72.54 for ISFSI licenses. The requirements for license terminations include the submission of a decommissioning plan to describe what steps are taken to ensure that the decommissioning can be performed in a safe manner and to demonstrate that the facility and site will meet criteria for release for unrestricted use. The requirements for the contents of the decommissioning plans are found in Regulatory Guide 3.65 (NRC 1989a) for nonreactor nuclear facilities and in draft Regulatory Guide DG-1005 (NRC 1989b) for nuclear reactor facilities.

### 5.2.1 U.S. Nuclear Regulatory Commission Regulations

NRC licenses and regulates civilian use of nuclear materials to protect public health and safety and the environment. NRC makes rules and sets standards for licensees and inspects the activities of licensees to ensure that they do not violate safety rules. NRC requirements are found in 10 CFR. In many cases NRC regulations are implemented by state agencies, who also have authority under state law to impose requirements. The NRC requirements under 10 CFR include the following:

Parts 30–33 pertain to licenses for the ownership and use of byproduct material,

Part 40 pertains to licensing of source material,

Part 50 pertains to licensing of production and utilization facilities,

Part 61 presents licensing requirements for land disposal of radioactive wastes and eventual decommissioning of the facility,

Part 70 pertains to licensing of SNM, and

Part 72 pertains to licensing requirements for independent storage of spent nuclear fuel and high-level radioactive waste.

Further requirements for the operation of commercial nuclear facilities are embodied in other Title 10 regulations. These regulations are applicable to decommissioning projects but do not directly affect them. These regulations include the following:

Part 20 presents standards for protection against radiation,

| | |
|---|---|
| Part 51 | pertains to environmental protection regulations for domestic licensing and related regulatory functions, |
| Part 62 | pertains to emergency access to LLW disposal facilities, |
| Part 71 | pertains to packaging and transportation of radioactive material, |
| Part 73 | pertains to physical protection of plants and materials, |
| Part 74 | pertains to material control and accountability for SNMs, and |
| Part 75 | pertains to safeguards on nuclear material. |

Other guidance documents and regulatory guides published by NRC include those in the following list.

- NUREG/CR-2082, *Monitoring for Compliance with Decommissioning Termination Survey Criteria (NRC 1981)*—This document addresses the final steps needed to ensure that a site that has been decontaminated can be released for unrestricted use.

- NUREG/CR-5512, *Residual Radioactive Contamination from Decommissioning: Technical Basis for Translating Contamination Levels to Annual TEDE*—This manual provides an acceptable method for translating residual radioactivity levels (measurable quantities) into doses to individuals. It is also expected to include a computer model that can be used for conducting a screening scenario/pathway analysis with site-specific parameters so that site-specific dose rate conversion factors can be calculated.

- NUREG/CR-5849, *Guidance Manual for Conducting Radiological Surveys in Support of License Termination (NRC 1992)*—This manual is intended to provide licensees with specific guidance on planning, conducting, and documenting site surveys that could be used to demonstrate that the site has been decontaminated to a level consistent with NRC criteria.

- Regulatory Guide 1.86, *Termination of Operating Licenses for Nuclear Reactors (AEC 1974)*—This guide describes methods and procedures considered acceptable for the termination of operating licenses for nuclear reactors.

- Regulatory Guide 3.65, *Standard Format and Content of Decommissioning Plans for Licensees Under 10 CFR Parts 30, 40, and 70 (NRC 1989)*—This document provides guidance on preparing decommissioning plans.

- Regulatory Guide 8.8, *Information Relevant to Insuring That Occupational Radiation Exposures at Nuclear Power Stations Will Be as Low as is Reasonably Achievable (ALARA) (NRC 1978)*—This document provides radiation protection information pertaining to actions taken during the design, construction, operation, and decommissioning to assure that occupational radiation exposures are kept ALARA.

### 5.2.2 Low-Level Radioactive Waste Policy Act and Amendments

The Low-Level Radioactive Waste Policy Act of 1980 and the Low-Level Radioactive Waste Policy Amendments Act of 1985 have had a major effect on the disposal of radioactive waste from commercial nuclear facilities. These acts have mandated the creation of regional "compacts" to cite and operate new disposal facilities. The acts established a series of milestones, penalties, and incentives to ensure that the compacts will be able to manage waste generated within their compacts. Until such time that the compact's disposal sites are operating, the existing disposal facilities impose surcharges on waste from outside their compacts. After a specified date, the compacts are responsible for managing their own radioactive wastes and can prohibit disposal of waste generated from outside their compacts (FR 1992). The current surcharge and the estimated cost for disposal of waste in future disposal facilities have caused the cost for waste disposal to become an increasingly large fraction of the entire decommissioning cost.

### 5.2.3 Nuclear Waste Policy Act and Amendments

The Nuclear Waste Policy Act of 1982 established the Office of Civilian Radioactive Waste Management within DOE to prepare facilities for the receipt of spent nuclear fuel from commercial nuclear power plants. However, the federal repository will be completed no sooner than 2010. Commercial nuclear power reactors licensed under 10 CFR 50 are required to be decommissioned at the end of their operating license (40 yr after start of construction). As indicated in the Introduction to this *Decommissioning Handbook*, and as stated in draft Regulatory Guide DG-1005, Section 3.3.1, "Fuel Disposal," irradiated spent fuel should be disposed of off-site before decommissioning starts. However, there is no federal repository for the receipt of the spent nuclear fuel. Therefore, 10 CFR 72 has been promulgated to enable holders of Part 50 licenses to build and operate ISFSIs until a federal repository is available. Therefore, decommissioning of the main nuclear reactor facility can commence, but there will be continued operation of the ISFSI until the spent fuel can be transferred to DOE custody.

### 5.2.4 Criteria for the Release of the Site and Materials from the Site

NRC Regulatory Guide 1.86 (AEC 1974) specifies the residual radioactive contamination limits after decommissioning. Other sources of guidance for release of radioactive materials are in 10 CFR 20. In addition, there are site-by-site criteria for the release of radioactive contamination located within the bulk of materials. Regulatory Guide 1.86 specifies surface contamination limits but does not specify bulk limits. NRC attempted to provide blanket guidance for below regulatory concern (BRC) materials that included bulk limits; however, public opposition has caused the NRC to withdraw its BRC policy. Consequently, no generally held release limits exist for bulk radioactive materials. Each nuclear facility being decommissioned has to negotiate an acceptable limit for bulk material based on site-specific criteria and conditions.

### 5.2.5 Nuclear Facilities Regulated by States and Local Governments

NRC has agreements with some of the states that nonreactor nuclear facilities may be regulated by state agencies in lieu of regulation by NRC. These states are termed *Agreement States*. These states regulate the nuclear facilities that would otherwise be licensed under 10 CFR Parts 30, 40, or 70. In addition, all states regulate facilities that handle naturally occurring radioactive materials and accelerator-produced radioactivity. In these cases, the decommissioning of the nuclear facilities would have to meet the requirements of the individual state regulations concerning decommissioning, funding, operating limits, and release criteria.

## 5.3 U.S. Environmental Protection Agency

EPA was established as an independent agency within the executive branch of the U.S. government. The agency strives to decrease and control pollution by integrating research with monitoring, setting standards, and enforcement activities. The regulatory requirements include the Clean Air Act of 1970 (CAA), Clean Water Act of 1977 (CWA), Safe Drinking Water Act of 1974 (SDWA), and RCRA, which provide a base program for regulating pollutants entering the air, surface water, groundwater, and land. These four laws establish a program to address hazardous wastes. Other laws that address hazardous waste include the Toxic Substances Control Act of 1976 (TSCA); CERCLA, which addresses cleanup of hazardous waste contamination from past practices; and the Superfund Amendment and Reauthorization Act of 1986 (SARA).

Together, these laws provide for a basic philosophy of reducing the amount of waste generated through process modification, recycling, and treatment. These laws are described in more detail in the following sections.

### 5.3.1 Clean Air Act

CAA established national goals for air quality to protect public health and welfare, and it required the use of quality standards and criteria for the control of pollutants in the environment. The approach of CAA is to determine the relationships between public health and welfare and air

quality, while restoring, maintaining, and improving the quality of the environment. Implementing regulations for the CAA are codified in 40 CFR Parts 50, 53, 56, 58, 60–62, 65–67, 69, and 81.

- In 40 CFR 50 standards are detailed for National Primary and Secondary Air Quality Standards. The national primary ambient air quality standards are those that are considered necessary. Secondary standards were developed to protect the public welfare from any known or anticipated adverse effects of a pollutant.

- In 40 CFR Parts 53, 56, and 58 guidance is provided for Ambient Air Monitoring, Regional Consistency Under the Clean Air Act, and Ambient Air Quality Surveillance Regulations, respectively.

- The National Emission Standards for Hazardous Air Pollutants (NESHAP), are detailed in 40 CFR 61, which applies to new and existing sources. Among the selected pollutants regulated in 40 CFR 61 are Radionuclide Emissions from DOE Facilities (40 CFR 61, Subpart H).

### 5.3.2 Clean Water Act

The goal of CWA is to restore, maintain, and enhance the chemical, physical, and biological integrity of the nation's water. To accomplish this goal, regulations were set forth establishing stream water quality and effluent limitations.

The enforcement mechanism legislated by CWA is the National Pollutant Discharge Elimination System (NPDES) promulgated by 40 CFR Parts 121–123 and 125. NPDES permits are issued to municipal and industrial dischargers to ensure that pollutant discharges do not violate water quality standards. Industrial discharge into a publicly owned treatment plant is regulated in 40 CFR 403. This means that some industries may have to pretreat their wastes before discharging them to the treatment plant.

Particular importance is placed on the control of effluents containing toxic or hazardous pollutants. Regulations concerning the discharge of toxic and hazardous pollutants are set forth in 40 CFR Parts 116 and 141–143.

### 5.3.3 Safe Drinking Water Act

SDWA regulates the quality of drinking water, and in so doing it effectively limits the concentration of contaminants in the groundwater. The National Primary Drinking Water Regulations and the enforcement responsibilities for these regulations are established in 40 CFR Parts 141 and 142. The National Secondary Drinking Water Regulations are established in 40 CFR 143.

### 5.3.4 Resource Conservation and Recovery Act

RCRA regulations define hazardous wastes and regulate their transport, treatment, storage, and disposal. RCRA defines all hazardous wastes as *solid waste*; this includes all types of hazardous wastes, whether they are solid, semisolid, liquid, or even gaseous (so long as they are in containers).

EPA has listed roughly 500 specific wastes that it considers hazardous to human health or the environment. RCRA and state laws provide that a waste can be hazardous if it exhibits one or more characteristics that make it physically or biologically hazardous. Under RCRA, EPA has defined four such characteristics: corrosivity, ignitability, reactivity, and toxicity.

Standards for generators of hazardous waste are detailed in 40 CFR 262. These requirements include obtaining an EPA identification number, meeting waste accumulation standards, labeling wastes, and keeping appropriate records. Generators are allowed to store wastes for up to 90 days in 40 CFR 262 without a permit and without gaining interim status as a treatment, storage, and disposal facility. If treatment residues are stored on-site for 90 days or more, 40 CFR 265 requirements apply.

Any facility (on-site or off-site) designated for permanent disposal of hazardous wastes must be in compliance with RCRA. Disposal facilities must fulfill permitting, storage, maintenance, and closure requirements contained in 40 CFR Parts 264–270. Subparts F and S of 40 CFR 264, include requirements for corrective action at RCRA-regulated facilities. If treatment residues are disposed of off-site, 40 CFR 263 transportation standards apply.

Under 40 CFR 264-265, all owners or operators of hazardous waste facilities are required to design a contingency plan to minimize hazards to human health or the environment from fires, explosions, or any unplanned sudden or nonsudden release of hazardous waste/constituents to air, soil, or surface water.

### 5.3.5 Toxic Substances Control Act

Congress enacted TSCA with the main objective of identifying and controlling hazardous chemicals during their manufacture, use, and disposal, thereby reducing adverse effects on human life and the environment. The act regulates the disposal and use of asbestos and polychlorinated biphenyls (PCBs).

### 5.3.6 Comprehensive Environmental Response, Compensation, and Liability Act

CERCLA was enacted in response to the concern for the dangers of negligent hazardous waste disposal practices. The objectives of CERCLA include the following:

- to provide the enforcement agency with the authority to respond to releases of hazardous wastes (as defined in CAA, CWA, and TSCA and by the

administrator of the enforcement agency) from "inactive" hazardous waste sites that endanger public health and the environment;

- to establish a Hazardous Substance Superfund;
- to establish regulations controlling inactive hazardous waste sites; and
- to provide liability for releases of hazardous wastes from such inactive sites.

### 5.3.7 Superfund Amendment and Reauthorization Act

SARA was passed to better safeguard the safety and health of workers and the community and to better manage the threat of exposure to hazardous substances released into the environment. SARA is composed of several important provisions. The most important is SARA, Title III, also known as the *Community Right-to-Know*. Title III sets federal, state, and local government requirements and guidelines for business and industry for the gathering and submission of information relating to the release of toxic chemicals into the environment. SARA builds on other regulatory acts and attempts to set uniform requirements with the OSHA Hazard Communication Standard for industry and construction. The key provisions of SARA are set forth in 40 CFR Parts 302, 304, and 311–313.

- Under 40 CFR 302 EPA is required to publish a list of "extremely hazardous substances" and threshold planning quantities (TPQs) for them. Any facility where an extremely hazardous substance is present in an amount in excess of the TPQ is required to notify the state commission. The list of extremely hazardous substances and their TPQs can be found in 40 CFR 355, Appendix A.
- Under 40 CFR 304 requirements are established for immediate reporting of certain releases of hazardous and extremely hazardous substances to state and local officials.
- Under 40 CFR 311 a facility owner or operator is required to submit a copy of the Material Safety Data Sheet to the state emergency response commission, the local emergency planning committee, and the local fire department for each hazardous chemical present at a facility, at or above the specified threshold. With the exception of changed circumstances or revised thresholds, this is a one-time reporting requirement.
- Under 40 CFR 312, coinciding with 40 CFR 311, an annual inventory is required of hazardous chemicals present at a site in amounts equal to or greater than the specified threshold at one time during the preceding calendar year.

- Under 40 CFR 313 owners and operators of certain facilities are required to complete a toxic chemical reporting form for each listed chemical that was manufactured, processed, or otherwise utilized in quantities above a specified threshold during the preceding calendar year.

## 5.4 Occupational Safety and Health Administration

OSHA regulates the protection of worker safety and health on the job. The functions of OSHA are to develop and promulgate regulations and enforce the OSHA Act of 1970. OSHA is codified as published blanket standards for national enforcement in all public safety and health areas and can be found in 29 CFR Parts 1910 and 1518. Buildings, mechanical guarding in machine design, electrical equipment, occupational-disease prevention, and noise exposure are just a few of the safety issues covered under OSHA. General requirements for work with hazardous waste, including provisions for site characterization and analysis; site control; training; medical surveillance; engineering, administrative, and personal protective equipment controls; site monitoring; information programs; drum and container handling; decontamination; and emergency response are established in 29 CFR 1910.120. The requirements of OSHA are applicable to decommissioning projects.

## 5.5 U.S. Department of Transportation

Transportation of hazardous and radioactive materials is governed by DOT. The DOT regulations located in 49 CFR Parts 170–178 establish criteria for the safe transport of hazardous and radioactive material on public highways. Guidance on the packaging and transportation of radioactive materials is provided in 10 CFR 71. Other transportation requirements are as follows:

Part 172 Hazardous Materials Tables and Hazardous Materials Communication Regulations (includes marking, labeling, placarding, monitoring, and shipping papers),

Part 173 Shippers—General Requirements for Shipments and Packagings (includes packaging),

Part 174 Carriage by Rail,

Part 175 Carriage by Aircraft,

Part 176 Carriage by Vessel,

Part 177 Carriage by Public Highway, and

Part 178 Shipping Container Specifications.

Chapter 14 of this handbook provides more details on these requirements.

## 5.6 Council on Environmental Quality

The CEQ establishes requirements for implementing the provisions of NEPA in 40 CFR 1500–1508. NEPA requires federal agencies to assess the environmental impact of major programs and actions early in the planning process. For those projects or actions expected to have a significant effect on the quality of the human environment or to be controversial on environmental grounds, the proponent agency is required to file a formal environmental impact statement. NEPA has done the following:

- provided a systematic way to deal with environmental concerns by including environmental costs in the decision-making process,
- opened governmental activities and projects to public scrutiny and public participation, and
- caused many projects to be modified or abandoned to balance environmental costs with other benefits.

For DOE facilities, 10 CFR 1021 establishes procedures for implementing the provisions of NEPA pursuant to the CEQ regulations.

## 5.7 International Atomic Energy Agency

IAEA is a specialized agency within the United Nations system. The overall objective of the IAEA's decommissioning program is to assist member states in (1) decommissioning their nuclear facilities in a safe, timely, and cost-effective manner and (2) keeping total radiation doses below permissible levels and ALARA now and in the future. In fulfilling these objectives, IAEA maintains involvement with international bodies and other United Nations organizations. Although IAEA is not a regulatory organization, many of its safety standards and codes of practice are widely used for regulatory purposes. These documents also form the basis for standards and regulations in many countries. Table 5.1 lists IAEA documents published to-date on decommissioning and decontamination of nuclear facilities.

**Table 5.1. IAEA Documents on Decommissioning and Decontamination of Nuclear Facilities**

| Document Title | Document Number |
|---|---|
| Safety Series | |
| *Factors Relevant to the Decommissioning of Land-Based Nuclear Reactor Plants* | Safety Series No. 52 (1980) |
| *Safety in Decommissioning of Research Reactors* | Safety Series No. 74 (1986) |
| *Safe Management of Wastes from the Mining and Milling of Uranium and Thorium Ores: Code of Practice and Guide to the Code* | Safety Series No. 85 (1987) |
| *Regulatory Process for the Decommissioning of Nuclear Facilities* | Safety Series No. 105 (1990) |

## Table 5.1. IAEA Documents on Decommissioning and Decontamination of Nuclear Facilities (continued)

| Document Title | Document Number |
|---|---|
| Technical Reports Series | |
| *Decommissioning of Nuclear Facilities: Decontamination, Disassembly and Waste Management* | Technical Reports Series No. 230 (1983) |
| *Decontamination of Nuclear Facilities to Permit Operation, Inspection, Maintenance, Modification or Plant Decommissioning* | Technical Reports Series No. 249 (1985) |
| *Methodology and Technology of Decommissioning Nuclear Facilities* | Technical Reports Series No. 267 (1986) |
| *Methods for Reducing Occupational Exposure During the Decommissioning of Nuclear Facilities* | Technical Reports Series No. 278 (1987) |
| *Decontamination and Demolition of Concrete and Metal Structures During the Decommissioning of Nuclear Facilities* | Technical Reports Series No. 286 (1987) |
| *Factors Relevant to the Recycle and Reuse of Components Arising from the Decommissioning of Nuclear Facilities* | Technical Reports Series No. 293 (1988) |
| *Cleanup of Large Areas Contaminated as a Result of a Nuclear Accident* | Technical Reports Series No. 300 (1989) |
| *Planning for Cleanup of Large Areas Contaminated as a Result of a Nuclear Accident* | Technical Reports Series No. 327 (1991) |
| *Disposal of Material from the Cleanup of Large Areas Contaminated as a Result of a Nuclear Accident* | Technical Reports Series (approved for publication, August 1990) |
| *Application of Remotely Operated Handling Equipment in the Decommissioning of Nuclear Facilities* | Technical Reports Series No. 348 (1990) |
| *Monitoring Programmes for Unrestricted Release Related to Decommissioning of Nuclear Facilities* | Technical Reports Series No. 334 (1991) |
| *Current Practices for the Management and Confinement of Uranium Mill Tailings* (Supersedes Technical Report Series No. 209) | Technical Reports Series No. 335 (1992) |
| *Measurement and Calculation of Radon Releases from Uranium Mill Tailings* | Technical Reports Series No. 333 (1992) |
| *Planning and Management for the Decommissioning of Research Reactors and Other Small Nuclear Facilities* | Technical Reports Series No. 351 (1993) |
| *Factors Relevant to the Decommissioning of Uranium Mining and Milling Facilities and Tailing Piles* | Technical Reports Series (Draft—to be completed in 1992) |
| *The Decommissioning Alternatives for a Nuclear Reactor After a Severe Accident* | Technical Reports Series (draft—to be completed in 1992) |
| *Cleanup and Decommissioning of a Nuclear Reactor After a Severe Accident* | Technical Reports Series No. 346 (1992) |
| Technical Documents | |
| *Management of Wastes from the Refining and Conversion of Uranium Ore Concentrate to Uranium Hexafluoride* | IAEA TECDOC-241 (1981) |
| *Decontamination of Operational Nuclear Power Plants* | IAEA TECDOC-248 (1981) |
| *Decontamination and Decommissioning of Nuclear Facilities: Final Report of Three Research Meetings (1984–87)* | IAEA TECDOC-511 (1989) |
| *Decontamination of Transport Casks and of Spent Fuel Storage Facilities* | IAEA TECDOC-556 (1990) |
| *Factors Relevant to the Sealing of Nuclear Facilities* | IAEA TECDOC-603 (1991) |
| *Consideration in the Safety Assessment of Sealed Nuclear Facilities* | IAEA TECDOC-606 (1991) |
| *National Policies and Regulations for Decommissioning Nuclear Facilities* | (Draft—to be completed in 1992) |

## 5.8 Conclusion

The complex interaction between the various regulatory agencies that govern decommissioning activities necessitates an understanding of the enabling legislation and the rules enforced by these agencies and requires careful project planning to adhere to the guidance they provide. This chapter briefly discusses the regulatory agencies that develop guidance for hazardous and radioactive components and presents a discussion of these requirements and guidance. Beginning with the planning process of a decommissioning project, one should establish and maintain a relationship with the appropriate regulatory agencies to ensure that all regulatory requirements are known or negotiated and therefore compliance can be met.

## 5.9 References

10 CFR. 1993. *Energy*. U.S. Government Printing Office. Washington, D.C.

40 CFR. 1993. *Protection of Environment*. U.S. Government Printing Office. Washington, D.C.

49 CFR. 1993. *Transportation*. U.S. Government Printing Office. Washington, D.C.

29 CFR. 1993. *Labor*. U.S. Government Printing Office. Washington, D.C.

DOE (U.S. Department of Energy). 1989. *A Manual for Implementing Residual Radioactive Material Guidelines*. DOE/CH-8901. U.S. Department of Energy. Washington, D.C.

EPA. (U.S. Environmental Protection Agency). August 1989. *CERCLA Compliance with Other Laws Manual: Part II. Clean Air Act and Other Environmental Statutes and State Requirements*. EPA/540/G-89/009. U.S. Environmental Protection Agency. Washington, D.C.

FR (*Federal Register*). 1992. Vol. 57, No. 77. "Proposed Rules." April 21, 1992.

Freeman, L. R. 1992. *Overview of NRC, DOE and EPA Regulatory Requirements*. ASME Professional Development Program for Decommissioning and Decontamination.

Laraia, M. 1992. *IAEA Activities on Decommissioning of Research Reactors and Other Small Nuclear Facilities*. Seminar for Asia and the Pacific on Ageing, Decommissioning and/or Major Refurbishment, Bangkok, Thailand, May 1992.

Moore, E. 1986. "Decommissioning Nuclear Facilities." *Transactions of the American Nuclear Society*, Volume 52, TANSAO 52 1-658. American Nuclear Society. La Grange Park, Illinois.

NRC (U.S. Nuclear Regulatory Commission). Revised June 1978. *Information Relevant to Ensuring That Occupational Radiation Exposures at Nuclear Power Stations Will Be as Low as is Reasonable Achievable.* Regulatory Guide 8.8. U.S. Nuclear Regulatory Commission. Washington, D.C.

NRC (U.S. Nuclear Regulatory Commission). 1989a. *Standard Format and Content of Decommissioning Plans for Licensees Under 10 CFR Parts 30, 40, and 70.* Regulatory Guide 3.65. U.S. Nuclear Regulatory Commission. Washington, D.C.

NRC (U.S. Nuclear Regulatory Commission). *Termination of Operating Licenses for Nuclear Reactors.* Regulatory Guide 1.86. U.S. Nuclear Regulatory Commission. Washington, D.C.

NRC (U.S. Nuclear Regulatory Commission). 1989b. *Standard Format and Content for Decommissioning Plans for Nuclear Reactors.* Regulatory Guide DG-1005. U.S. Nuclear Regulatory Commission. Washington, D.C.

NUREG/CR-2082. June 1981. *Monitoring for Compliance with Decommissioning Termination Survey Criteria.* U.S. Nuclear Regulatory Commission. Washington, D.C.

NUREG/CR-5512. January 1990. *Residual Radioactive Contamination from Decommissioning: Technical Basis for Translating Contamination Levels to Annual TEDE.* U.S. Nuclear Regulatory Commission. Washington, D.C.

NUREG/CR-5849. June 1992. *Guidance Manual for Conducting Radiological Surveys in Support of License Termination.* U.S. Nuclear Regulatory Commission. Washington, D.C.

# 6.0 FINAL PROJECT CONFIGURATION BASED PLANNING

Determining the desired end product and the final site configuration is essential to project planning for site decommissioning. The elements of final site configuration are site boundaries and characteristics (e.g., structures, landscape). Depending on regulatory approval, the site could be released for unrestricted use, released with restrictions, or maintained as a controlled site with reduced S&M requirements. This chapter discusses and emphasizes the importance of knowing the final goal in order to plan the decommissioning project. Factors that should have been considered during the development of the final goal are discussed in Chapter 3.

## 6.1 Initial Site Configuration

Before establishing the final site configuration, the initial configuration must be described (i.e., the facilities/conditions present at the start of decommissioning). This process is supported by the preliminary site characterization and allows for the direct comparison of the initial and final configuration.

### 6.1.1 Initial Project Boundary

The first step in defining initial site configuration is to identify site boundaries. Site boundaries comprise area and soil depth. Areal boundaries should include areas where radioactive materials are controlled, or the boundaries may already exist as the owner's property line. Soil depth boundaries are determined by a preliminary site characterization and by planned use (typically, a site to be released for unrestricted use has no depth boundary). Although radioactive material concentrations usually decrease with depth, radionuclides or chemicals may be transported via groundwater to greater depths or outside areal boundaries. If this is the case, as determined during preliminary site characterization, areal boundaries may need to be expanded. For projects conducted under CERCLA, the boundary is established as a part of this regulatory process.

In cases where the facility's being decommissioned is only part of a larger complex that remains in operation, defining the site boundary may be quite different. Here, the site may include only the structures themselves. Some soil may also be considered, allowing that soil, piping, and any underground tanks outside that boundary be addressed in subsequent complex-wide decommissioning activities. Generally, it is not desirable to clean up such an area to unrestricted release limits unless provisions can be made to avoid its recontamination.

### 6.1.2 Initial Project Contents

The second step in defining the initial site configuration is to describe the facilities within the boundary. These facilities fall into three categories. First, all liquids, bulk chemicals, and contaminated soil—which often contain the highest concentrations of contaminants, are the most difficult to treat, and are the most readily dispersible—should be identified. Liquids and sludges in tank storage are important inclusions in this category, as are ion exchange resins, insulating fluids in electrical equipment (i.e., transformers), and hydraulic system fluids. The second

category of facilities includes equipment that is highly contaminated or that will require unique removal or treatment. Finally, there are other pieces of equipment and the buildings themselves. For each category, the description should identify all materials that make up the facility. These materials will require individual treatment or consideration during removal, so as many categories and subcategories should be used as necessary for clarity. For example, subcategories of pipes might include utility pipes, cooling system pipes, process piping, and sprinkler system piping; and subcategories of siding might include transite, steel, fiberglass, and interspersed insulation.

## 6.2 Final Site Configuration

The final site configuration describes the nature and arrangement of all materials remaining within the site boundary after decommissioning. In its ultimate form, a decommissioned site consists only of soil at grade, but plans may call for other materials to remain, such as foundation concrete, cleared underground piping, or buildings.

### 6.2.1 Final Site Boundary

The final and initial site boundaries are identical. If part of the site is to be released for unrestricted use, one can consider each part separately.

### 6.2.2 Final Project Contents

The final project contents include any buildings, facilities, equipment, or materials that are scheduled to remain after the completion of decommissioning. The final project contents also include the soil within the site boundary.

### 6.2.3 Project Site Release Criteria

The project site release criteria are determined by or through negotiations with the regulatory agency having jurisdiction. The criteria define (directly or indirectly) the amount of residual radioactive, toxic, or hazardous materials that are allowed to remain on the final project site.

The criteria will vary depending on the nature of the release (e.g., for restricted or unrestricted use), the nature of the matrix (e.g., surface contaminated or bulk contaminated), and the nature of the contaminants (e.g., asbestos, cobalt-60, mercuric chloride, or plutonium-239). Some criteria have been established for release for unrestricted use, and examples are given in Table 6.1. For other contaminants, the criteria will have to be developed to the satisfaction of the regulators, usually by using pathway analyses. NUREG/CR 5512 (NRC 1990) gives a pathway methodology for developing radiological release criteria for structures, and RESRAD (NRC), developed for DOE, is a computer program for calculating allowable residual radioactive materials in soil based on pathway analysis. In addition, the American Society for Testing and Materials (ASTM) 1988 standard E 1278-88 provides more general guidance for doing pathway analyses for the release of sites. Release criteria for restricted releases need to be negotiated.

The project goals, which are derived from the release criteria, in turn allow for planning the characterization program and subsequent activities.

**Table 6.1**
**Established Criteria for Release for Unrestricted Use**

| Contaminant | Matrix | Release Criteria | References |
|---|---|---|---|
| Radium-226* | Surface soil | 5 pCi/g | 40 CFR 192.12 |
| Radium-226* | Deeper soil | 15 pCi/g | 40 CFR 192.12 |
| Strontium-90* | Surface, average** | 10,000 dpm/100cm$^2$ | (1), (2) |
| Strontium-90* | Surface, smearable | 200 dpm/100cm$^2$ | (1), (2) |
| Cobalt-60* | Surface, average** | 5,000 dpm/100cm$^2$ | (1), (2) |
| Cobalt-60* | Surface, smearable | 1,000 dpm/100cm$^2$ | (1), (2) |
| Plutonium-239* | Surface, average** | 100 dpm/100cm$^2$ | (2) |
| Plutonium-239* | Surface, smearable | 20 dpm/100cm$^2$ | (2) |
| Uranium-235, 238 | Surface, average** | 5,000 dpm/100cm$^2$ | (1), (2) |
| Uranium-235, 238 | Surface, smearable | 1,000 dpm/100cm$^2$ | (1), (2) |
| Strontium-90 | Drinking water | 8 pCi/l | 40 CFR 141.16 |
| Tritium | Drinking water | 20,000 pCi/l | 40 CFR 141.16 |
| Mercury | Drinking water | 0.002 mg/l | 40 CFR 141.11 |

* Values also apply to other radionuclides.
** Total residual surface contamination averaged over no more than 1m.
(1) DOE Order 5400.5, "Radiation Protection of the Public and the Environment."
(2) U.S. NRC Regulatory Guide 1.86, "Termination of Operating Licenses for Nuclear Reactors."

## 6.3 Identification of Material for Disposition

The difference between the initial and final site configurations, shown pictorially in Figure 6.1, defines the material that needs to be disposed of during the decommissioning project. In general, the available options are either disposal as waste, disposition as clean material, or disposition on site compliant with the site release criteria.

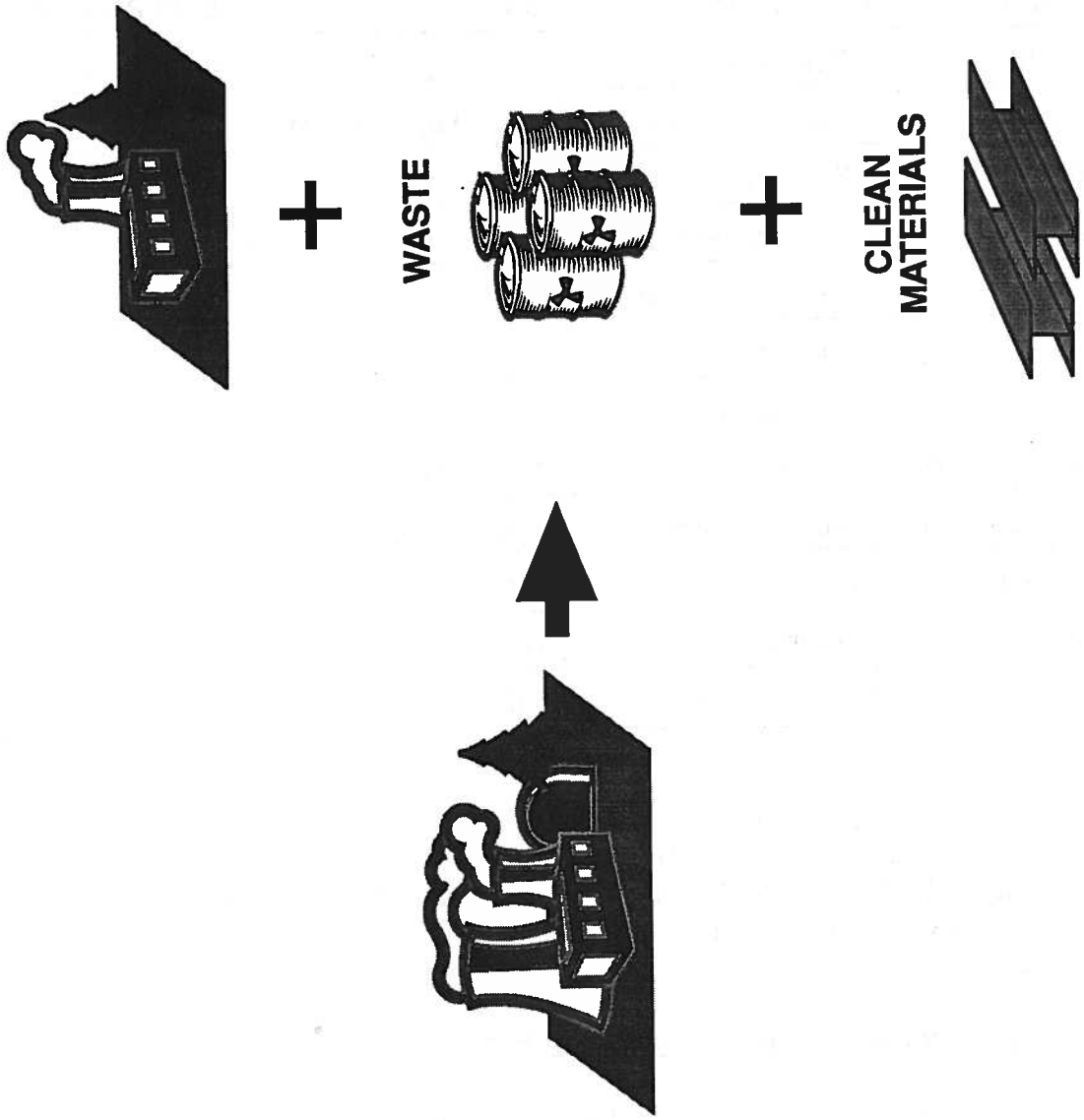


**Figure 6.1. Overall decommissioning material balance**

### 6.3.1 Material to Be Disposed of Off-Site

The material that is to be dispositioned off-site includes material removed from the site during decommissioning and material imported to support decommissioning that is not to remain. One way to plan for this disposition is to create a materials disposition matrix that lists all existing materials not to remain, as well as their desired disposition. Figure 6.2 shows such a matrix format. Only a selection of general categories is shown. Other categories of materials or dispositions can be added to accommodate the needs of a specific decommissioning project. The matrix as shown may be adequate for simple decommissioning projects. However, it is advisable to use smaller, more specific categories for a large project. Steel, for example, may be broken down into structural steel, utility piping, process piping, reactor pressure vessel steel, steel siding, and steel from several different kinds of tanks. The decision to divide a category into subcategories should be determined by the need to dispose of, treat, or remove types of the material in the category in a significantly different manner from others in that category.

#### 6.3.1.1 Material Imported During Decommissioning

Materials to be disposed of during decommissioning also include materials that the decommissioning contractor brings on-site to do the work and any secondary waste that will be generated. Secondary wastes include the byproducts of any processes the contractor plans to use for decontamination or waste treatment. Another section of the materials disposition matrix is provided for the decommissioning planner to identify such materials. In Figure 6.2, the sample categories are general examples of the types of materials the contractor might consider.

#### 6.3.1.2 Utility Material

Material supplied as a utility (most often water) and used during decommissioning must al. be disposed of. A category for utility material is included on the materials disposition matrix.

### 6.3.2 Material to Be Disposed of On-Site

The material to be disposed of on-site is defined by the final project contents.

## 6.4 Material-Driven Planning

The decommissioning planner needs to address the handling and disposition of each category of material identified on the material disposition matrix or listed among the final project contents. This involves identifying for each material the potential disposition end points, the proposed recipient, and the recipient's acceptance criteria. Knowledge of the acceptance criteria enables the planner to identify the appropriate characterization requirements, specific materials decontamination methods, and overall decommissioning methods.

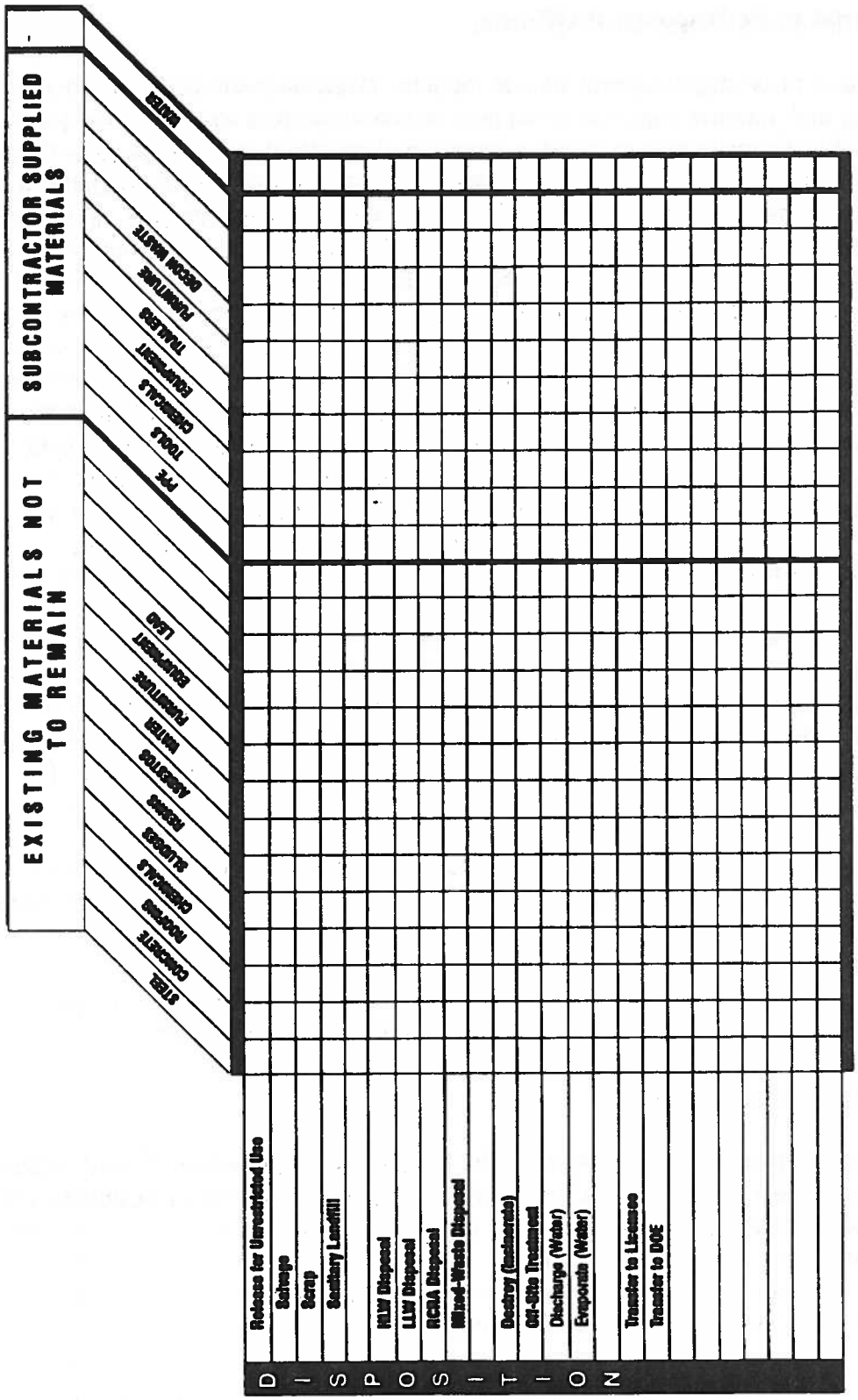


**Figure 6.2. Materials disposition matrix**

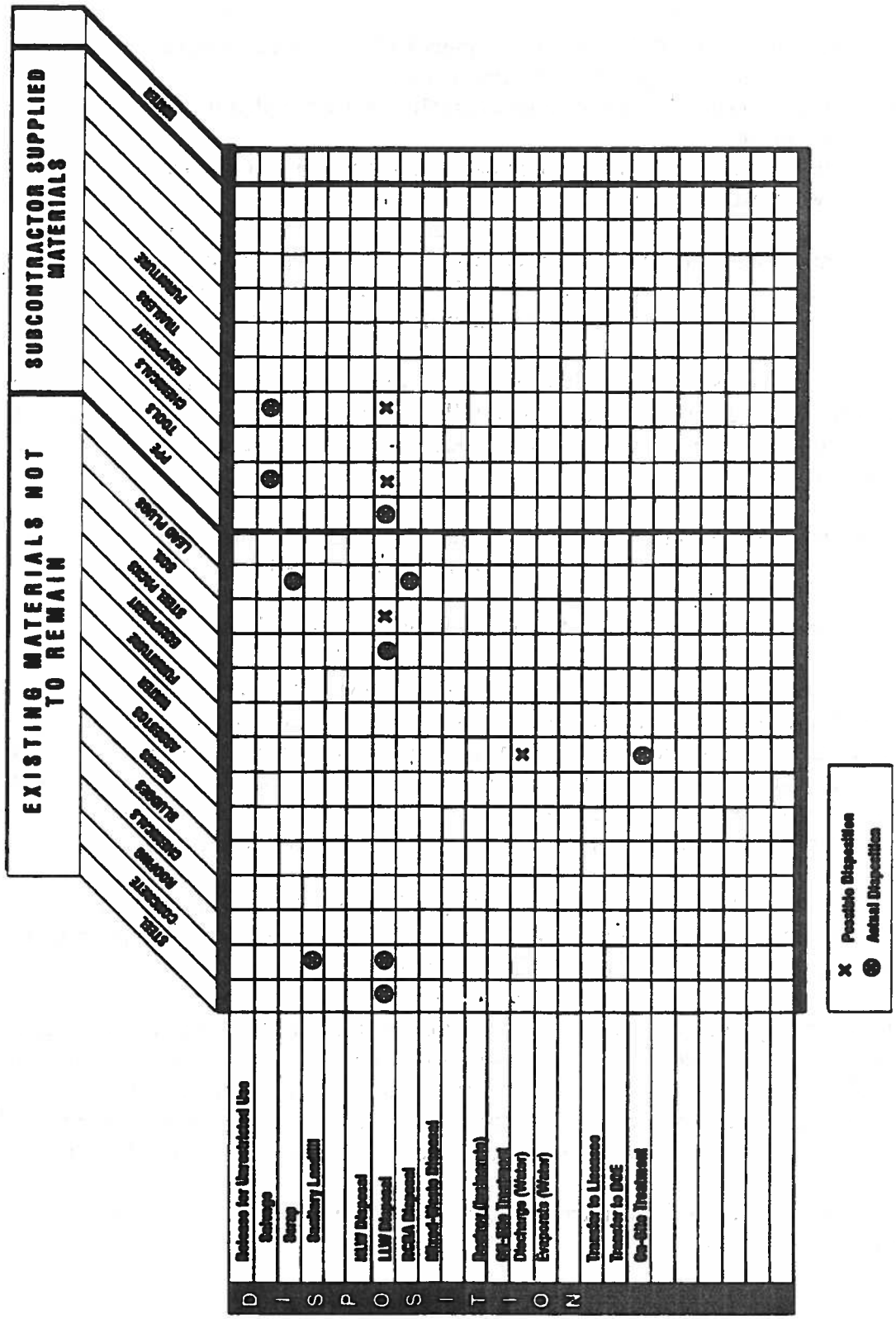


**Figure 6.3. Illustrative materials disposition matrix for the 3033 Storage Garden Decommissioning Project**

- Material/waste characterization

  - steel, concrete, PPE, and soil (to meet LLW waste acceptance criteria and transportation requirements);
  - soil (to meet criteria for limited backfill material so that it can remain in place);
  - subcontractor tools and equipment (to meet criteria for release for unrestricted use);
  - shield plugs (to meet waste acceptance criteria for reuse or mixed-waste storage and transportation requirements); and
  - water [to meet acceptance criteria of the liquid low-level radioactive waste (LLLW) treatment facility].

The storage garden materials were actually disposed of as LLW (steel and some of the concrete), used as backfill (all of the soil), treated as LLLW (all of the water), and disposed of in a sanitary landfill (some of the concrete). The lead plugs were stored as mixed waste pending possible future decontamination.

The decommissioning of this small facility illustrates the value of project planning, including initial and final site configurations and materials disposition matrix-based planning.

### 6.5.2 The Princeton-Pennsylvania Accelerator Decommissioning Project

The Princeton-Pennsylvania Accelerator (PPA) was a 3-GeV proton synchrotron that was operated for 10 yr until 1972. At the start of the project the accelerator and associated equipment had already been removed, leaving a sizable structure of activated concrete, structural steel, and rebar as remaining sources of contamination. The accelerator building was a circular structure shielded by thick, high-density concrete walls and 22 ft of earth fill above the roof. This building surrounded a 100-ft-diameter inner ring where the activated material resided.

The site boundary was defined as the outside surface of the accelerator building, and the final site configuration was defined as the remaining occupiable portions of the building, monolithic concrete remaining, and soil fill to grade (Bair and Snedaker 1990).

Figure 6.4 shows a hypothetical materials disposition matrix for this project. The possible dispositions of the existing materials (concrete, soil, steel, and rebar) included reuse, disposal in a sanitary landfill, and disposal as LLW. The subcontractors' equipment and trailers were expected to be surveyed and released for unrestricted use, and the utility water needed for the anticipated operations (diamond wire cutting) was expected to be tested and discharged.

Based on the possible disposition of materials anticipated, the characterization for this project included the following items.

| DISPOSITION | EXISTING MATERIALS NOT TO REMAIN | | | | | | | | | | | | | | | SUBCONTRACTOR SUPPLIED MATERIALS | | | | | | | | | | |
|---|---|---|---|---|---|---|---|---|---|---|---|---|---|---|---|---|---|---|---|---|---|---|---|---|---|---|
| | STEEL | CONCRETE | ROOFING | CHEMICALS | SLUDGES | PIPING | ASBESTOS | WATER | FURNITURE | EQUIPMENT | SOIL | | | | | PPE | TOOLS | CHEMICALS | EQUIPMENT | TRAILERS | FURNITURE | | | | | WATER |
| Release for Unrestricted Use | | | | | | | | | | | | | | | | | | | | | | | | | | |
| Salvage | | | | | | | | | | | | | | | | | ● | ● | | | | | | | | |
| Scrap | ● | ● | | | | | | | | | | | | | | | | | | | | | | | | |
| Sanitary Landfill | ● | | | | | | | | | | | | | | | | | | | | | | | | | |
| | | | | | | | | | | | | | | | | | | | | | | | | | | |
| HLW Disposal | | | | | | | | | | | | | | | | | | | | | | | | | | |
| LLW Disposal | ● | ● | | | | | | | | | × | | | | | | × | × | | | | | | | | |
| RCRA Disposal | | | | | | | | | | | | | | | | | | | | | | | | | | |
| Mixed-Waste Disposal | | | | | | | | | | | | | | | | | | | | | | | | | | |
| | | | | | | | | | | | | | | | | | | | | | | | | | | |
| Destroy (Incinerate) | | | | | | | | | | | | | | | | | | | | | | | | | | |
| Off-Site Treatment | | | | | | | | | | | | | | | | | | | | | | | | | | |
| Discharge (Water) | | | | | | | | | | | | | | | | | | | | | | | | | | ● |
| Evaporate (Water) | | | | | | | | | | | | | | | | | | | | | | | | | | |
| | | | | | | | | | | | | | | | | | | | | | | | | | | |
| Transfer to Licensee | | | | | | | | | | | | | | | | | | | | | | | | | | |
| Transfer to DOE | | | | | | | | | | | | | | | | | | | | | | | | | | |
| On-Site Treatment | | | | | | | | | | | | | | | | | | | | | | | | | | × |

× Possible Disposition
● Actual Disposition

**Figure 6.4. Illustrative materials disposition matrix for the PPA Decommissioning Project**

- Initial site characterization

  - identify the extent of contaminated concrete and rebar,
  - identify contaminated soil, and
  - identify worker protection requirements.

- Material/waste characterization

  - steel and concrete (to meet LLW waste acceptance criteria and transportation requirements),
  - soil (to meet criteria for release for unrestricted use or acceptance criteria for LLW disposal),
  - subcontractor tools and equipment (to meet criteria for release for unrestricted use), and
  - water (to meet criteria for discharge to a sanitary sewer).

Actually, concrete and some steel were reused for roadbeds, some steel was disposed of in a sanitary landfill, and some steel and concrete were disposed of as LLW. The water was tested and discharged, and the contractor's equipment and trailers were surveyed and released. No soil had to be disposed of off-site.

### 6.5.3 The Shippingport Station Decommissioning Project

The Shippingport Station Decommissioning Project was a large decommissioning project encompassing a 7-acre site that contained a 150-MW nuclear power plant, from which the fuel had been removed. Everything else remained, however, including primary and secondary water systems, cooling water systems, a reactor pressure vessel, a radioactive waste processing building and yard, waste sludges and resins, and electrical controls and instrumentation. Also remaining were water in the fuel handling canal, asbestos on most piping, and chemicals in the "hot" and "cold" chemistry laboratories. The major radionuclides of interest were Co-60, Cs-137, Sb-125, and Eu-152. The main interconnected building complex included the Fuel Handling Building, the Turbine Building, the Administration Building, and the Test and Training Building. Of this main complex, only the Fuel Handling Building was to be included in the decommissioning. Five small, separate buildings; six underground vaults; pipe trenches; and numerous aboveground tanks were also included.

The areal boundary for this project was the perimeter of the site less the remaining buildings (the Turbine Building, Administration Building, and Test and Training Building). There was no defined soil depth limit because the site was expected to meet the criteria for release for unrestricted use regardless of depth. If contamination in excess of the release criteria was found outside of the site boundary, that area would also have been included in the project.

### 6.4.1 Identification of Material Disposition

The materials disposition matrix should identify one or more methods for disposing of each category of material. Initially, this identification can be general, such as disposal as LLW, disposal in a sanitary landfill, or on-site release. More than one disposal option can be identified for each listed material. For example, the structural steel category might be divided into thick sections slated for unrestricted release, complex sections to be smelted and reused conditionally, and parts integral to other materials to be disposed of as LLW.

### 6.4.2 Identification of Material Recipient

For each disposition method selected, decommissioning planners must be able to identify a recipient. The recipient may be a contractor able to perform a decontamination or waste treatment activity or a disposal site able to accept that waste. For material to be dispositioned on-site, the site itself is the recipient. In a case where several contractors are licensed to perform one type of activity, cost, capability, contractor's restrictions, and transportation can be identified for comparison. When no contractor can be found to perform the work, another disposition has to be identified for that material.

### 6.4.3 Identification of Acceptance Criteria

The next step is to identify each recipient's criteria for accepting material and any required packaging for transportation. Disposal sites may have limits on the types and quantities of materials they receive and may specify the QA requirements to establish the validity of material characterization. Licensees also have limits on the types and quantities of radionuclides that they may possess at one time. The material that is to remain on-site is acceptable if it is compliant with the site release criteria.

### 6.4.4 Characterization to Meet the Acceptance Criteria

The final step in material-driven planning is to identify the characterization techniques needed to meet the acceptance criteria. Chapter 7 provides guidance on such techniques.

## 6.5 Case Studies

The following sections apply the materials disposition matrix to three decommissioning projects. Such a matrix was not used for these projects, but the descriptions and accompanying diagrams illustrate how it could have been used.

### 6.5.1 The 3033 Storage Garden Decommissioning Project

The 3033 Storage Garden was a series of seven storage wells, each approximately 12 in. in diameter and 5 ft deep, which were used to store miscellaneous radioactive sources, including Cs-137 and Sr-90, at the Oak Ridge National Laboratory (ORNL). The wells were constructed

of stainless steel pipes with welded steel bottom plates. They were placed in the ground, and a 12-in.-thick concrete slab was poured around them. The overall dimensions of the "garden" were 12 × 3 × 5 ft deep. Steel-clad lead plugs had been used to reduce the dose rate during storage.

The site boundary was defined as the rectangular prism 3 × 12 × 8 ft deep (3 ft lower than the bottom of the storage wells). The final configuration was defined as *soil filled to grade*. Because the garden was located within a larger controlled area, the mini-site was not released for unrestricted use ( MMES 1989; MMES 1984).

Figure 6.3 shows a hypothetical materials disposition matrix for this project. The existing materials not to remain include the steel (storage racks and pipes), approximately 8 gal of water contained in the pipes, the concrete, the shielding plugs, and any soil reading more than 5 mrad/hr beta/gamma.

The material disposal planned for the storage garden was as follows:

- steel pipes—disposal as LLW,
- steel racks—disposal as LLW,
- concrete—disposal in a sanitary landfill or as LLW,
- soil—use as backfill or disposal as LLW,
- lead plugs—reuse or storage as mixed waste for possible future decontamination, and
- water—treatment as liquid radioactive waste.

Figure 6.3 also shows that subcontractor materials used on the project had to be disposed of. Personal protective equipment (PPE) was disposed of as LLW, and contractor tools and equipment were surveyed and released for unrestricted use.

Determining the intended disposition of each material serves as the basis for characterization; therefore, characterization for this project, if based on the matrix, would only need to include the following items.

- Initial site characterization
  - identify contaminated concrete,
  - identify contaminated soil,
  - determine if decontamination of lead is required, and
  - identify worker protection requirements.

The final site configuration was defined to be the remaining monolithic concrete (more than 3 ft below grade and that used as retaining walls), concrete and masonry rubble more than 10 ft below grade, soil fill to grade, and a 6-in. soil cap for drainage purposes (Crimi 1985).

Figure 6.5 shows a hypothetical materials disposition matrix for this project. The possible dispositions of the existing materials were largely dependent on whether or not they were contaminated and, if contaminated, whether or not decontaminating them would be economical. For example, some steel may be able to be released for unrestricted use directly, other steel would require decontamination, and yet other could be activated (and not able to be cleaned) or too difficult to clean and survey. Because the final configuration included space for all the concrete as fill, no clean material was to be removed from the site. Contaminated concrete would be decontaminated or removed and disposed of as LLW. The disposal of resins and sludges that were known to be radiologically contaminated was dependent on whether or not they qualified as hazardous wastes. Tools and equipment could be sent to another licensee or another DOE facility if they could not be released, rather than being disposed of as LLW. This would allow for the reuse of equipment not easily decontaminated.

Based on the possible disposition of materials anticipated, characterization would include the following items.

- Initial site characterization
  - identify the extent of contaminated material in each category,
  - determine if decontamination is feasible for each category,
  - determine if bulk contaminated materials are also hazardous, and
  - identify worker protection requirements.
- Characterization for material disposition
  - each category of materials to meet LLW waste acceptance criteria and transportation requirements;
  - each category of materials to meet criteria for release for unrestricted use;
  - subcontractor tools and equipment to meet criteria for release for unrestricted use;
  - water to meet criteria for discharge to the Ohio River according to the NPDES permit;
  - chemically contaminated water to meet acceptance criteria for off-site treatment and transportation requirements;
  - materials to be transferred to a licensee or DOE to meet license requirements and transportation requirements; and
  - soil, concrete rubble, and monolithic concrete to meet release criteria allowing the material to remain on-site.

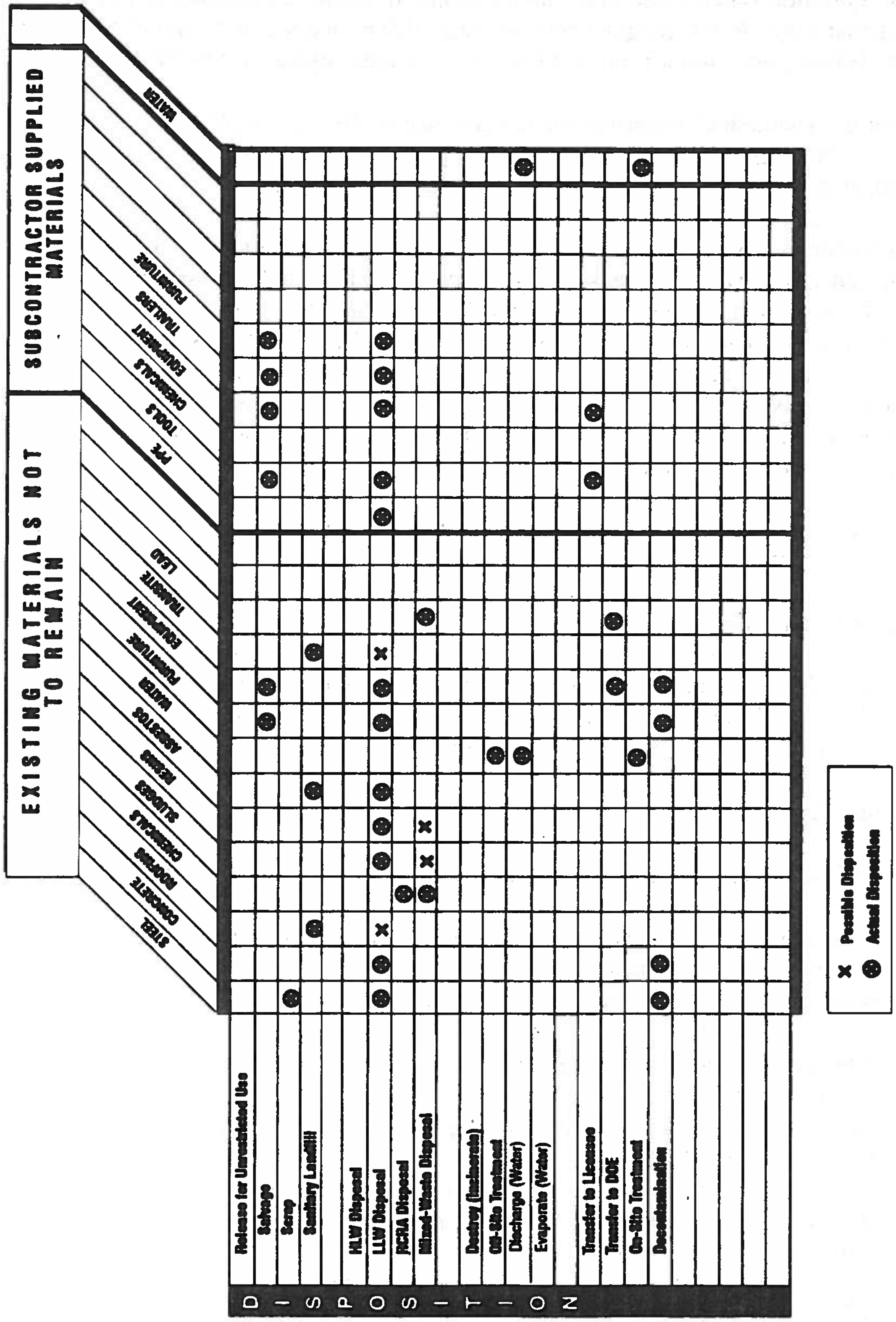


**Figure 6.5. Illustrative materials disposition matrix for the Shippingport Station Decommissioning Project**

Figure 6.5 shows how materials included in the Shippingport Station Decommissioning Project were actually disposed of. At Shippingport not all these determinations were made before the beginning of the project. This poses a risk of doing too much or too little, or of having material that cannot be disposed of. However, definition of the final site configuration, use of the materials disposition matrix, and characterization data can minimize such risk.

## 6.6 Conclusion

The planning process outlined in this chapter is one systematic way of approaching a decommissioning project. Careful planning such as this—including initial and final site configuration definition and materials disposition matrix development—reduces cost, accelerates schedule and ensures the timely disposal of all materials with minimal and manageable exceptions.

## 6.7 References

ASTM Standard E 1278-88. *Standard Guide for Radioactive Pathway Methodology for Release of Sites Following Decommissioning*. American Society for Testing and Materials. Philadelphia, Pennsylvania.

Bair, W. A., and W. H. Snedaker, Jr. 1990. "Decontamination/Decommissioning of the Princeton-Pennsylvania Accelerator Facility." Presented at the ANS Power Division Topical Meeting and ASME Nuclear Energy Conference, Newport, Rhode Island, September 16–19, 1990.

Crimi, F. P. 1985. "Decommissioning Program for the Shippingport Atomic Power Station." Presented at the Atomic Industrial Forum, Fuel Cycle Conference '84, April 4, 1985.

MMES (Martin Marietta Energy Systems, Inc.). December 1989. *3033 Storage Garden Decommissioning Project: Waste Management Plan*. ORNL/RAP/LTR-90/5. Oak Ridge, Tennessee.

MMES (Martin Marietta Energy Systems, Inc.). August 1984. *Oak Ridge National Laboratory (ORNL) Preliminary Radiological Survey of Storage Gardens 3026-D and 3033 at Oak Ridge National Laboratory*. ORNL/CF-84/205. Oak Ridge, Tennessee.

# 7.0 CHARACTERIZATION

This chapter discusses the purpose of characterization, as well as a method for developing a supporting sampling and analysis plan. In addition, characterization techniques that are adaptable for use on a decommissioning site are presented. Characterization will likely be needed throughout the decommissioning project.

## 7.1 Introduction

*Characterization* is the measurement or sampling and analysis required to gather needed information, usually about the type and/or quantity of contaminants present in or on a material. Characterization may serve many purposes throughout the decommissioning process. These have been divided into four categories: safety characterization, initial site characterization, in-process characterization, and characterization for material disposition.

Safety characterization involves gathering information about the safety of an area before anyone is permitted to enter, most often before entering older buildings that have been closed for substantial periods of time. For buildings currently in use, however, safety considerations should be addressed on a daily basis, and requirements for entry are well known and practiced.

Initial site characterization includes that characterization done for planning purposes. The precision needed for the characterization varies with the planning needs. This category can be further divided into screening, preliminary, and detailed characterization.

The purpose of screening characterization is to gather enough information on the physical, radiological, and chemical condition of the facility to assess the status of the facility and the nature and extent of any problem areas. Data collected in this type of characterization are generally based on available information, including historical operational documentation, and are used for planning the overall program and for prioritizing and sequencing decommissioning activities.

Preliminary characterization is done to establish a baseline of information concerning the physical, chemical, and radiological condition of the facility. This can include taking samples or conducting inspections designed to fill the gaps in the information from the screening characterization. It may be done to develop preliminary details and estimates, including cost and risk estimates and estimates for waste generation. Information gathered in these preliminary phases often serves as the technical basis for work and project decisions and is valuable in selecting a preferred alternative. The purpose of detailed characterization is to supplement the previous information as needed to support the decommissioning project engineering.

In-process characterization is done to evaluate the efficacy of ongoing decommissioning activities, for example, to see if decontamination or waste treatment processes are giving the desired results. The purpose of characterization for material disposition is to show that some part or all of the decommissioning project is complete. This includes the demonstration that materials leaving the

site have been properly treated and, finally, verifying that the site may be released for the intended use.

The following list gives examples of the kinds of questions that may need to be answered during each of the four types of characterization.

- Safety characterization
  - Is it safe to enter the building?
    - Is the building structurally sound?
    - Are the floors sufficiently strong?
    - Are the ceilings stable?
    - Are there any unprotected precipices?
    - Are there any unstable stored materials (tanks, piles)?
  - Are radiation dose rates significant?
    - Is monitoring required?
    - Is occupancy time limited?
    - Are there areas that must not be entered?
  - Is significant radiological contamination present?
    - Is anticontamination clothing (skin protection) required?
    - Is respiratory protective equipment required?
  - Are chemical hazards, including asbestos, present?
    - Is skin protection required?
    - Is respiratory protection required?
  - Are biological hazards present?
    - Is skin protection required?
    - Is respiratory protection required?
- Initial site characterization (for any material):
  - What contaminants are present?
    - Which, if any, radiological materials?
    - Which, if any, hazardous (RCRA) materials?
    - Which, if any, toxic materials (e.g., asbestos, PCBs)?
    - How much of these materials is present?
  - What is the extent of the contamination?
  - What is the concentration of each contaminant?

- Will the contamination affect demolition?
  - ◊ Will it affect worker health and safety?
  - ◊ Will it cause contamination in other parts of the facility?

- Will the contamination affect disposal?
  - ◊ Does it meet the waste acceptance criteria for its intended destination?
  - ◊ Does it meet requirements for transportation?

- Is decontamination required?
  - ◊ Which decontamination techniques are applicable?
  - ◊ What decontamination wastes will be generated?
  - ◊ What treatment of decontamination wastes will be required?
  - ◊ Does the waste meet requirements for transportation if off-site decontamination is planned?

- Is treatment of the material required?
  - ◊ Which treatment is appropriate?
  - ◊ Are materials present that would interfere with possible treatments?
  - ◊ Does the material meet requirements for transportation if off-site treatment is planned?
  - ◊ What type of packaging does the material require?

• In-process characterization (for any process):

- Is it operating within specifications?
  - ◊ Does the product meet specifications?
  - ◊ Do effluents comply with requirements?
  - ◊ What treatment is required for the wastes?

• Characterization for material disposition:

- For material to be released: Are release criteria met?

- For any waste to be disposed of:
  - ◊ Are waste acceptance criteria met?
  - ◊ Are requirements for transportation met?

- For residual site material: Are release criteria met?

Since characterization requires time and money, it should be performed toward specific objectives and be limited to the minimum required to answer applicable questions. An effective technique to limit characterization is to use historical or process knowledge. Secondly, one can use

statistical techniques, which allow for inferences to be made about an entire area from the results of a limited number of samples. In all cases, it is most efficient to restrict data gathering to the minimum commensurate with the need. For example, one can choose a less powerful statistical test or single measurements for some initial characterization when that information is adequate for the purpose. On the other hand, a greater statistical significance will likely be needed for characterization done to evaluate release conditions because the validity of the data is subject to challenge by intervenors.

## 7.2 Elements of Characterization

The following are elements of a comprehensive characterization program:

1. Review historical information.

2. Define characterization objectives.

3. Prepare a sampling and analysis plan.

4. Conduct sampling and measurement.

5. Review, analyze, and verify data.

The following sections address each of these elements individually.

### 7.2.1 Review of Historical Information

Reviewing information about the history of a facility or site gives the decommissioning planner valuable background about the structure and possible contamination present. This information is pertinent for safety characterization to identify potential structural instability as decommissioning progresses (Chapter 12), and it can also streamline the characterization of radiological, chemical, and biological contamination. Historical information may consist of records or recollection of process knowledge, process upsets or unusual events, and/or previous surveys and measurements.

Process knowledge includes a description of the process or chemicals used in all or part of the facility. This knowledge can narrow the list of potential contaminants. For example, a facility that was used for fuel reprocessing would be expected to have the whole spectrum of fission products, uranium, TRU elements, tributyl phosphate, dodecane, and nitric acid. In contrast, a facility used to manufacture radium needles would only be expected to have radium and radium daughters, with no more than household amounts of hazardous chemicals. Although a process history review is most applicable to initial site characterization, it is of comparable importance in characterizing material for disposal. By identifying the list of possible contaminants from a review of process history, one can optimize the characterization effort and avoid spending time and money trying to measure something known not to be present.

Information about process upsets or unusual events that might have spread contamination to unsuspected areas is also important. In one case, a spill of dry, radiologically contaminated ion exchange resin during operations partially filled the crevices around a shielding block. The top of the crevice was taped and painted, effectively hiding the contamination, until the block was pulled free with a crane during decommissioning. The spread of contamination and internal exposure of a worker could have been avoided if that event had been documented in the facility's operational history. Similarly, the effective and commonplace technique of painting contaminated areas to fix the contamination for operations purposes can be detrimental to decommissioning if the practices are not recorded or the records not researched. Unknown painted contamination usually causes costs and delays associated with unexpected/unplanned work. Another example is that knowledge of fires in an area should lead one to expect contamination on most overhead structures. NRC now requires that information about unusual events be saved so that it is accessible at the time of decommissioning (10 CFR). However, that was not the case in the above example, so particular attention should be paid to the possibility that unusual events occurred.

A third type of historical information is the result of previous surveys and measurements. For example, analytical results from fuel pools can indicate the kinds of contaminants present (and, as significantly, those absent). Similarly, measurements of radiological contaminants collected in an ion exchanger can give good indications of the amounts of less abundant contaminants and allow one to estimate the relationship between common and rare radionuclides present. Routine radiological surveys and surveys conducted to support special work are both useful. Information they provide may be sufficient to actually replace characterization or, at the very least, may allow for the planning of a more efficient characterization plan by indicating areas that should be considered separate populations or by estimating the variability that has to be considered in the plan.

Although historical information is a valuable asset in preparing a characterization program, it should be viewed with some skepticism and an intuitive sense of doubt. At least some of the characterization effort should be designed to test the validity and completeness of the historical data.

### 7.2.2 Definition of Characterization Objectives

It is important to identify specific characterization objectives (i.e., questions to be answered) before planning to collect and analyze samples or make measurements in the field. When this is done the characterization effort can be focused on answering those questions alone and so avoid the creation of unnecessarily elaborate (and expensive) characterization schemes. On the other hand, there are some questions that are significant enough to warrant extensive characterization programs. For example, if the question is "Does the surface of that wall need to be decontaminated?" a few measurements might suffice, especially if the wall is small and there is little consequence of being wrong. In contrast, the selection of a treatment technique and the subsequent advance procurement of expensive equipment may rest on the results of part of a characterization program. In this case, enough sampling has to be done to minimize the

uncertainty in equipment selection. Often, sufficient quantities of material may have to be obtained to support a pilot demonstration of the proposed technology. Of comparable importance, in cases of characterizing material or waste leaving the facility or residual material left behind, the results may have legal significance. In these instances, the requirement to meet a specific level of confidence may be spelled out and a pedigree required for sample collection and analysis.

Since, fundamentally, the objective of characterization is to determine whether the surface, item, etc., is contaminated, one needs to know what material, what contaminant, and what constitutes "contamination." Examples of questions used to define characterization objectives are as follows:

- Does the wall in Room X need to be decontaminated?
- Is there uranium contamination under the paint?
- Is the sludge in Tank X a mixed waste?
- Is enough Sr-90 present on the floor to require the more stringent beta contamination limits?
- Does the fissile material in the drums comply with DOT rules?

Measurements will have to be taken for comparison with the decision point to answer these questions. The decision point may be chosen by the engineer or defined by regulation, decommissioning guides, waste acceptance criteria, or process input specifications. The following are examples of decision points:

- the minimum level requiring decontamination for release for unrestricted use,
- the maximum concentration of TRU allowed in a waste form,
- the minimum concentration of PCBs requiring treatment according to 40 CFR 761,
- the minimum concentration of asbestos for a material to be considered *asbestos-containing*, or
- the maximum concentration of mercury allowed for processing a material in an incinerator.

The characterization objectives that might result from combining the above questions and decision points are listed below.

### 7.2.3.3 Comparison Quality and Economy

In each of these methods the quality of the comparison depends on how much the contaminant concentrations vary among samples. If the variation is large and the contaminant concentrations are close to the decision point, the chance of getting the wrong answer is sizable. To reduce this chance it is necessary to take more samples or measurements, thereby increasing the cost. An optimum sampling plan is one that will balance the chance of getting a right answer with the associated expense. Where a right answer is essential, a higher cost is justified. Conversely, where compensation for an error can be made easily, less characterization cost can be justified.

In any case, it is desirable to take the fewest samples or measurements necessary to get the needed answer. There are a number of kinds of sampling programs, including the following:

- complete—measuring at every location in a population or all of the material in a population,
- biased—choosing to measure at locations known historically to be special (i.e., the worst),
- random—choosing the sampling locations randomly throughout a population,
- random stratified—choosing samples randomly but at different frequencies for different parts of the population (depends on some historical knowledge), and
- random systematic—choosing the first sample randomly and others at a specified frequency/spacing.

Complete sampling gives exacting knowledge about a population. However, it can be expensive, and much can be learned with much less sampling. The other kinds of programs sample less than completely and give less than perfect knowledge about a population. Biased sampling makes use of prior knowledge about the population and may require the least amount of sampling. However, it will not be reliable if the prior knowledge is incomplete or erroneous. Decisions based on biased sampling are a matter of professional judgement, using specific calculations to quantify uncertainty.

Where complete sampling is not practical and biased sampling is not reliable, quality decisions can still be made efficiently if the measurements are made randomly and analyzed using statistical techniques. Random sampling is most valuable when little is known about the population in question. *Test Methods for Evaluating Solid Waste, SW-846,* gives a description of the three random sampling schemes and discusses considerations for choosing one or the other [Department of Commerce (DOC) 1986]. The use of statistics is a field unto itself and, except for the few simple paragraphs that follow, cannot be addressed in this handbook.

### 7.2.3.4 Statistical Test Planning

The most common statistical tests used in decommissioning are tests such as the student's t-test about the mean of a population. For these tests one infers information about the mean of a population based on a comparatively small number of random measurements. These measurements are used to compute a sample average and standard deviation. These values then are used to estimate the population mean. Because of variation within the population and the randomness of the samples, an uncertainty will always be associated with this inferred population mean.

The comparison of this uncertain estimate of the population mean with a decision point value is made by calculating the probability that any difference between the two results from chance. If any observed difference probably results from chance, one concludes that the population mean is not different from (or not greater than) the decision point—that is, the population is in compliance with the standard. On the other hand, if any observed difference is probably not the result of chance, one concludes otherwise.

A key element in the use of the t-test is to determine, before measurements are taken, a value for the acceptable chance. This defines the fraction of time that one will conclude that the population is greater than the decision point value (out of compliance) when it is not. This is termed *Type I error*, and is usually chosen to be 5% or 1%. The smaller the value of Type I error, the larger the number of samples required to decide about any observed difference; thus, fewer measurements are required if the population mean is very different from the decision point value or if the Type I error chosen is large.

The chance that one will conclude that a population mean is compliant when it is not is called *Type II error*. Type II error is not simply chosen (as in the case of Type I error) but is determined by the number of samples and the type of statistical test (t-test or some other test). One can reduce the Type II error by making a larger number of measurements or by choosing to use a more "powerful" test.

The use of tests about the mean of a population usually relies on the assumption that the population of measurements is normally distributed or on management of the data (i.e., by employing averages of measurements) so that a normal distribution will be created.

A second type of useful test is the tolerance test. It allows one to make determinations about the extreme values in a population without any measure of variation or assumption about the distribution within the population. For example, according to generally accepted statistical standards, if 60 measurements are taken randomly from any population, there is a 95% chance that 95% of the population is lower than the highest of those 60 measurements.

For a tolerance test, as with tests about a population mean, a larger number of samples are required if a higher level of certainty is required. To be 99% sure that 99% of a population is less than the highest value sampled, one must collect 140 random samples rather than just 60.

A statistician or statistics text can provide additional information on this subject. Some useful references on the use of statistics follow:

- *Methods for Environmental Pollution Monitoring* (Gilbert 1987).
- *Methods for Evaluating the Attainment of Clean-up Standards*. Volume I, "Soils and Solid Media" (Gilbert 1989).
- *Methods for Evaluating the Attainment of Clean-up Standards*. Volume II, "Ground Water" (Gilbert 1992a).
- *Methods for Evaluating the Attainment of Clean-up Standards*. Volume III, "Reference-Based Standards for Soils and Solid Media" (Gilbert 1992b).
- *Sampling* (Thompson 1992).

#### 7.2.3.5 Quality Assurance Requirements

QA requirements are those necessary to ensure that the results of the measurement or analysis is an accurate description of the material or area measured. One can provide this assurance by verifying that the following statements are true:

- The sample is representative.
- The sample is collected properly.
- The analysis result is assigned to the proper location/sample.
- The correct measurement/analysis was performed.
- The measurement/analysis achieves the desired accuracy.
- The measurement/analysis achieves the desired precision.

When a sample is taken to characterize the average conditions in a medium (as opposed to determining information about the variation within the medium), it is important that the sample be representative. The following factors ensure representativeness:

- the medium is thoroughly mixed,
- samples taken from different parts of the medium are composited, and
- proportionate amounts of solids and liquids are obtained.

The following factors ensure that a sample is collected properly:

- appropriate sampling equipment,
- cleaning sampling equipment between samples,
- clean sample containers,
- proper sample preservation, and
- collection according to a workplan.

To be sure that the results are assigned to the proper sample measurement, maintain the following:

- labeling,
- field logbook notations,
- chain-of-custody records,
- packing lists for transportation,
- laboratory verification of receipt, and
- sample tracking during analysis.

The following factors should ensure that the correct analysis is done:

- analysis according to a workplan,
- following a QA/quality control (QC) program,
- data review, and
- repeat analyses for questionable data.

The following factors should ensure that the desired accuracy is achieved:

- analytical procedures in use;
- instruments maintained according to manufacturer's instructions;
- instruments calibrated according to procedures and checked;

- Determine if the average gross beta contamination on the wall is less than 5,000 dpm/100 $cm^2$.
- Determine if there is detectable uranium in a sample of paint under the sink.
- Determine whether the sludge passes the Toxicity Characteristic Leaching Procedure (TCLP) test for metals.
- Determine if Sr-90 makes up more than 10% of the beta-emitting radionuclides on the floor.
- Determine whether the fissile content in each drum is less than 15 g.

### 7.2.3 Preparation of a Sampling and Analysis Plan

The sampling and analysis plan defines the data quality objectives necessary to achieve the characterization objectives. The data quality objectives define the following:

- kinds of samples or measurements required;
- required instrument sensitivities;
- sample sizes;
- number of samples/measurements;
- sample/measurement locations;
- data reduction, validation, and reporting; and
- QA requirements.

Guidance on the preparation of a sampling and analysis plan for the final site characterization is given in *A Manual for Conducting Radiological Surveys in Support of License Termination* (Berger 1993).

#### 7.2.3.1 Required Analyses and Sensitivities

The characterization objective itself defines the kind of measurement or sampling needed, and, in turn, the analysis desired and the sensitivity required to reach the decision point define the amount of material to be collected for each sample. The confidence required of the results defines the number of samples/measurements required and their desired locations. Finally, the significance of the question is used to develop the QA requirements. For example, if the results

of a characterization will have regulatory or health and safety ramifications, or if they will be used to determine the necessity of procuring expensive equipment for treatment, the samples must be subject to the highest QA standards. In contrast, if the results do not have health and safety implications, and if changing direction during decommissioning is not difficult, QA requirements may be less stringent.

The kinds of analysis that could be required to answer the five questions posed in Section 7.2.2 would likely be the following:

- beta survey of the wall,
- uranium concentration of a paint sample,
- TCLP analysis of the sludge,
- specific Sr-90 analysis of flooring (pCi/100 $cm^2$), and
- passive/active neutron assay.

Typical sensitivities attainable and sample volumes required for a variety of analyses are given in Section 7.5.

#### 7.2.3.2 Comparison Criteria

The number and locations of samples or measurements depend on the way the results will be compared with the decision points (or limits). There are several ways to make this comparison, and the choice of these is important in developing the sample plan. Possible requirements for comparing results with a decision point include the following:

- the average value of the population must be less than the limit,
- one value must be less than the limit,
- all values must be less than the limit,
- the values over the limit must be infrequent, or
- the average must be less than one limit and no values may be over a higher limit.

- blanks analyzed—reagent, field, trip, or equipment;
- spiked check samples analyzed; and
- split samples analyzed by another independent laboratory.

The following factors should ensure that the desired precision is achieved:

- analysis of replicate samples,
- matrix spike/duplicate analyses,
- periodic assessment of measurement quality, and
- performance and system audits.

Additional information concerning sampling and analysis plans is given in SW-846.

### 7.2.4 Sampling and Measurement

Samples are either solid, liquid, or gas. Most samples taken to support decommissioning are solids and liquids since decommissioning is a materials-driven process. Air samples are taken to detect hazardous or toxic chemicals, and radiological air samples are taken for worker protection purposes. However, air/gas sampling may also be necessary to assess the quality of ventilation air exiting the facility, evaluate off-gas concentrations from waste treatment operations in terms of regulatory requirements, or verify that contaminants in ambient air at the site boundary or off site are consistent with emissions data and compliant with regulations. Direct measurement in the field (tritium air monitor) or measurements of air samples in the field (alpha air monitor) are discussed in Chapter 13.

Sampling liquids is generally straightforward because liquids either are homogeneous or can be made homogeneous by stirring or sparging. Even when this is not practical, samples can be taken from different areas and depths to assess the variation within the medium or composited to assess the average composition. Some liquid sampling tools include the following:

- composite liquid waste sampler (Coliwasa),
- weighted bottle,
- thief,
- syringe sampler,
- dipper,

- pump,
- steam or air jet, and
- remotely operated submersibles (for pond-floor sludges).

Solids sampling is more varied, because the solids may be viscous or sticky, granular, or monolithic. In the case of monolithic solids, the sample must be cut out or otherwise removed from its environment. Sampling techniques need to be selected on a case-by-case basis because needs and techniques are so varied. Some techniques used for sampling solids are as follows:

- auguring (for soils),
- hollow-stem auguring and split spooning (for soils),
- core drilling (for concrete and rock),
- core drilling or trepanning (for metals),
- shoveling or scooping (for granular material),
- scraping (for surface layers),
- collecting drilling debris (for concrete or metal), and
- using a trier (for soil and sticky solids).

### 7.2.5 Data Management

A large quantity of data may be generated during characterization activities, especially in the case of characterization for site release. Three kinds of information are generated for each measurement made: the measurement itself, the location of the measurement, and supporting QA information. Records of measurements are most often recorded manually by marking the measurement value at the proper location on a map or survey form. Data identifying the instrument, its calibration, and the measurement date are included along with signature blocks for persons making and approving the measurements. Generally, about as much time is taken to record the data as is used to make the measurements.

Decommissioning can require gathering a large amount of data, and some techniques have been developed to speed up this process. One technique is to use some of the newer instruments that are able to enter measurement data into a computer directly or to store the data for a later dump.

In addition, two commercially available systems allow the measurement location to be identified and recorded as the measurement is being made. These two differ in scale. The larger-scale

system is the Mapping and Radiation Survey System, which relies on satellite ranging. It combines the NAVSTAR global positioning system, a customized geographic information system, and a customized communications system. A mobile surveyor collects time, location, and survey information, either storing it for a later data dump or communicating it to a command unit on a real-time basis. It is adaptable to alpha, beta, and gamma survey information, as well as gamma spectroscopy. Unmodified, it matches measurement to position within ±300 ft and hence is suitable for characterization of large sites. However, modifications are available that can pinpoint the measurement location to ±1 ft, making the system useful for any outdoor survey. The mobile unit is compact enough to be transported by an individual.

The smaller-scale system, the Ultrasonic Ranging and Data System (USRADS), uses an ultrasonic ranging system to establish the location of the measuring instrument and a radio link to transmit data directly to a computer. As many as six different kinds of measurements can be transmitted concurrently. The measuring instrument contains an ultrasonic transmitter that locates ultrasonic receivers at specific locations (the manufacturer recommends a 200-ft grid for receiver spacing). Each receiver measures the time of flight for the transmitted signal, allowing the definition of the measuring instrument location. Measurements are radioed to the computer at the same time so that the measurement and location data can be handled together.

### 7.2.6 Review of the Program and Data

Providing for periodic review is a good way to ensure the success of a characterization program. Initially, the individual who will eventually use the data should review the plan to see if data needs will be met. Other possible reviews of the plan include the following:

- practicality, by experienced field personnel;
- sample suitability, by an analytical chemist;
- sampling safety, by a safety professional;
- process representativeness, by an engineer;
- plan statistics, by a statistician; and
- QC measures, by a QA specialist.

Reviews should continue during sampling and analysis to allow for early detection of errors or anomalies so that corrections or alterations can be made without impacting the whole program. For example, trends in measurements made may indicate that the stratified random sampling plan in use will not give the desired results. The plan can then be amended by altering the sampling frequency or the definition of the stratified zones.

## 7.3 Characterization Methods

Characterization methods can be categorized according to the location where analysis is performed, as follows:

- measurements in the field (i.e., in situ),
- measurements in an on-site facility,
- measurements in an on-site laboratory, and
- measurements in an off-site laboratory.

In the field, a material can be directly sampled and measured. This type of analysis is usually on a small scale and is less sensitive than laboratory analysis. An on-site facility is used for industrial-scale measurements such as measurements of 55-gal drums and larger packages. Normally, an on-site facility would be used to characterize waste or material to be released. In contrast, an on-site laboratory is typically used for laboratory-scale measurements of soil and air samples. (Laboratory measurements are similar to those made in the field but provide a greater degree of reliability.) Measurements identified for analysis in an off-site laboratory require sophisticated and often large equipment and/or detailed operating procedures. Such equipment is not readily adaptable to operation in a trailer at a decommissioning site. Additional protocol and handling are required for laboratory analysis (either on site or off site) whenever the sample must leave the sampling team's custody. The protocol is needed to ensure that the analytical results are assigned to the proper sample. Typically, this involves the use of labels, seals, field log books, chain-of-custody records, and analysis request forms. Handling considerations include the choice of containers and the holding time allowed for analysis, refrigeration, and packaging and shipping.

Table 7.1 identifies the types of analyses most applicable to a decommissioning project for measurements in the field, in an on-site facility, and in an on-site laboratory. The analyses are divided into passive and active measurements. The techniques listed in this table and subsequently discussed in Sections 7.3.1 and 7.3.2 are limited to those generally applicable to decommissioning. Space does not permit a discussion of all the techniques that could be used productively (the reader should refer to texts on radiation measurements). However, some additional techniques are listed in Chapter 13, as many, are also useful for health physics or industrial hygiene purposes. Techniques used predominantly for worker protection are mentioned in Chapter 12 only (e.g., gross beta in air, explosive gas analysis).

### 7.3.1 Passive Measurements

Passive measurements report characteristics such as contamination levels of the material or a sample of the material without altering the material or sample itself. The following sections describe several forms of passive measurement.

**Table 7.1. Standard Radiological and Chemical Measurement Techniques Amenable for Use on a Decommissioning Site**

| MEASUREMENT TECHNIQUE | APPLICABILITY* | | |
|---|---|---|---|
| | In Situ | On-Site Facility | On-Site Lab |
| Passive | | | |
| Alpha survey | S | | S |
| Beta survey | S | | |
| Gamma gross, isotopic | S,B | B | B |
| Neutron | B | B | |
| Alpha smearable | S | | S |
| Beta smearable | S | | S |
| Chemical smear | | S | S |
| Dose rate | S,B | B | |
| Alpha spectrometry | | | S |
| Beta spectrometry | | | S |
| Liquid scintillation | | | S,B |
| Volatile organic | B | | |
| Mercury | B | | |
| Gas chromatograph | B | | |
| Active† | | | |
| x - Real-time radiography | | B | |
| x - Digital radiography | | B | |
| x - Computed tomography | | B | |
| γ - X-ray fluorescence | S | | |
| n - Passive/active neutron | B | B | |
| n - Imaging passive/active neutron | | B | |
| n - Californium shuffler | | B | |
| n - Capture gamma cell | | B | |

* S = surface contamination; B = bulk contamination.

† x (X-ray), γ (gamma), and n (neutron) indicate the type of radiation used in the active technique.

### 7.3.1.1 Alpha and Beta Measurements

Surface contamination can be measured in either of two ways. One is to hold the detector stationary, close to the surface (usually less than 1 cm away), for a fixed period of time. The detector is commonly an instrument that integrates the counts over the time selected and gives a numerical result. Some of these instruments also have the capability to store a number of results for later computer input. Statistically based sampling can ensure representative results even when only a percentage of the surface is actually checked.

The other measurement technique is to scan. Using this technique the instrument is held close as before, but it is moved systematically along the surface at a speed slow enough to allow detection of a change in instrument response. The limiting speed is a function of both the detector and the instrument resolving time. Speeds of more than 1–2 in./s are not recommended for the standard Geiger-Müller (GM) pancake probe. However, large-area probes allow a faster scan rate or yield an improved sensitivity at a comparable rate. The operator receives either visual or audible output from the instrument, although there is general agreement that slight increases in count rate, which might indicate the presence of contamination, are more reliably detected using the audio output.

A variety of detection instruments is available to measure contamination. They differ in several factors, including detector area, mechanism of detection, sensitivity to alpha and/or beta radiation, data handling features, and the ability to measure both alpha and beta radiation separately or concurrently.

Most often, detectors using thin-window GM tubes are used to measure fixed radioactive material. The windows of these detectors are only about 2 mg/cm$^2$ thick, so they are sensitive to both alpha and beta radiation. However, there is no convenient way to distinguish alpha and beta signals because a basic characteristic of GM tubes is that all signals are the same size. Thin-window GM tubes are from 10% to 30% efficient for medium-energy beta particles. This fact, when coupled with the minimum count rate above background that can be reliably detected (generally regarded as 100 cpm ), allows the measurement of beta radiation at or below the 5,000 dpm/100 cm$^2$ limit in DOE Order 5400.5 and NRC Regulatory Guide 1.86 (AEC 1974). The most commonly used thin-window detector is the pancake probe: a detector with a circular cross section and a sensitive area of about 15 cm$^2$. A variety of similar probes are available, which differ in shape, effective area, and shielding. Large-area probes (e.g., probes with a sensitive area of 100 cm$^2$) are convenient because the reading does not have to be corrected for probe area before comparing the result to the regulatory limit. Most of these probes, however, are proportional counters or scintillators.

Other detectors measure alpha radiation alone or clearly separate alpha and beta radiation measurements. These detectors include pulse ionization chambers, proportional counters, and scintillation counters. Thin windows are required for all of these detectors to admit the alpha radiation while keeping out ambient air or light. One common problem with thin-window

detectors is the fragility of the thin window. To make the window more sturdy, one supplier fabricates it directly on the alpha scintillator. All three of these types of detectors can be adapted to differentiate between the pulses generated and thus count alpha and beta radiation simultaneously. However, this advantage over GM counters has a price—the need for more sophisticated electronic amplification and, consequently, a higher cost.

One recent development, referred to as LRAD, is the detection of alpha radiation by collecting the ions generated in air. These ions can be made to travel several meters; alpha particles only travel less than 5 cm. One application of LRAD consists of a bottomless box placed on the surface of soil or other material. A positively charged electrode in the upper interior of the box attracts the negative ions produced in the air below the box (MacArthur, et al. 1993). This technique is regarded as reliable for contamination down to 50–70 dpm/100 $cm^2$ for material surfaces using a 0.5-$m^2$ detector and a 10-min counting time. A 1-$m^2$ detector used to measure soil was reported to have a statistical error of ±2 pCi/g for the top 30 μm of soil and a 5-min counting time. The instrument background was 8 pCi/g. A second application of LRAD uses a chamber into which small parts can be placed. The total amount of alpha contamination can be measured down to about 300 dpm (Eberline).

A second new development in measuring surface radiological contamination is the position sensitive proportional counter (PSPC) (Shonka, Bennett, and Misko 1993). Instead of extracting the signal from one end of a collector, this detector collects signals from both ends. Because of the resistance of the collector wire, the relative size of the two coincident signals determines the location of the event along the wire. A second dimension is obtained by moving the detector over the surface perpendicular to the wire and comparing sequential sets of counting data. One detector used was effectively 150 in. long. When commercial development is complete, the PSPC is expected to be useful for detecting hot particles and for monitoring floors, portals, and laundry.

#### 7.3.1.2 Gamma Measurements

When the radionuclides in a volume of bulk material, typically contained in a drum, box, or tank, emit gamma radiation, direct external measurements can identify and/or quantify the radioactive material inside. Gamma radiation is detected using plastic scintillators, sodium iodide (thallium activated) crystals, or germanium crystals. Plastic scintillators are the least expensive of the three, followed by sodium iodide crystals. Germanium crystals are the most expensive. However, the inexpensive plastic scintillator is not of much value in distinguishing gamma radiation from different nuclei. Sodium iodide crystals are used to identify and quantify radionuclides present based on different gamma energies and are the most efficient of the three kinds on a unit-volume basis. Germanium detectors give the highest resolution of gamma energy available.

There are two general gamma measurement techniques. One is to surround the material, which is usually drummed or bagged, with as many detectors as possible. Although the large number of detectors makes this technique the most sensitive, plastic scintillators are generally used

because of the significantly lower cost. Because the plastic scintillators are largely unable to effectively distinguish between gamma rays of different energies, the technique is most applicable where only one or two gamma-emitting isotopes are likely to be present in the material. In this case, the radiation detected can be related mathematically to the concentration of radionuclides fairly reliably. Drum or bag counters that make use of this technique are commercially available.

The second gamma measurement technique is to scan the material with a smaller detector, typically 2–8 in. in diameter and 2–5 ft thick. One commercially available drum counter that uses this technique has a turntable to rotate the drum and move the detector vertically at the same time. Quantification can be achieved by correcting for absorption of radiation within the material. One way to perform this correction is to include a source of radiation and an additional detector in the measurement system. This extra system measures the attenuation of radiation by the material being tested so that the density can be determined. The density is used to correct the primary measurement and estimate the quantity of each radionuclide present.

The on-site laboratory application of this technique usually consists of a heavily shielded cave containing the detector. The sample to be analyzed is placed in the cave with the detector. NaI detectors provide the greatest sensitivity, easily down to less than 1 pCi/g for Co-60 or Cs-137. However, Ge(Li) detectors and hyperpure germanium (HPGe) detectors provide much higher resolution of gamma energies.

A new technique has recently been developed for generating the image of a gamma radiation field. It is related in principle to the gamma camera used in medicine. A collimator is used to allow only those gamma rays arriving from a given angle to reach the detector. This geometry is maintained using a position-sensitive photomultiplier tube. The signal from the photomultiplier tube and information about its location are managed to give a two-dimensional display of the gamma ray intensity (Redus, et al. 1992). Developers of this technique have merged this information with the picture from a video recorder to show the gamma ray image superimposed on a picture of the area surveyed.

#### 7.3.1.3 Neutron Measurements

Measurements of neutrons are useful for determining the amount of fissile material and TRU present in a material. Neutron measurement techniques are much more sensitive than gamma measurement techniques for these materials because gamma ray emissions often are too few or too low in energy and are largely absorbed in the material. Neutron measurements are most often applied to certify waste for acceptance criteria, but they have also been applied to determine the holdup of fissile material in process piping and components.

Neutrons can be measured by surrounding the subject material, which is usually drummed, with a moderator blanket with interspersed neutron detectors. This practice allows the detection of neutrons arising from (alpha, neutron) reactions and spontaneous fissions. Typically, the drum is rotated during the measurement to reduce errors resulting from nonhomogeneities in the waste. However, the number of neutrons escaping the package is seriously affected by both the location

of the source(s) and the presence of moderating and absorbing material in the matrix. Where these factors are well known (e.g., when dealing with $UO_2F_2$ in pipes), this technique can be used successfully.

Measuring fast neutron coincidences is useful for determining the number of spontaneous fissions from even-numbered TRU elements, most notably Pu-240. This measurement can be combined with gamma isotopic measurements (which can give the relative amounts of various TRU elements) to extend information about the quantity of Pu-240, thereby giving quantities of the others. These measurements are also sensitive to the composition of the material examined. Using active measurement techniques (Section 7.3.2) is necessary to lower the sensitivity of the technique and increase its reliability.

#### 7.3.1.4 Smearable Contamination

Smearable radioactive contamination is measured by rubbing a piece of dry filter paper over 100 $cm^2$ of surface using moderate pressure. The amount of radioactive material transferred to the paper can be measured in the field using one of the detectors described in Section 7.3.1.1 or transported to a laboratory for gross alpha or gross beta measurements. The laboratory analyses are preferred because they are more sensitive. The laboratory uses the same detection techniques, but the equipment does not need to be portable. Therefore, the equipment can be designed to reduce background, to be operated in a lower background area, to accommodate longer counting times, to guarantee reproducible geometries, and even to use thinner windows. In contrast, the quicker field measurement of smear samples is preferable for making in-process measurements during decontamination activities.

Although the amount of material on the filter paper is most often regarded as the smearable contamination, not all of the smearable contamination is removed by this technique. In effect, NRC defines a removal efficiency of 10% (10 CFR 71.87) and requires empirical evidence to justify a larger efficiency. Smearable chemicals are sampled similarly, except that the samples must be analyzed according to different techniques and requirements.

#### 7.3.1.5 Dose Rate Measurements

Measurement of dose rates at specified locations is required for the shipment of radioactive materials and for the release of structures for unrestricted use. The limits and requirements differ among sites and regulatory agencies; for example, DOT limits from 2 to 1,000 mrem/hr, DOE limits from 20 μR/hr to 1 mrad/hr, and NRC limits for residual dose rate that may be as low as 5 μR/hr.

A variety of detectors is available to measure dose rates in the 0.1–200 mrem/hr range. The most reliable are portable ion chambers and compensated GM detectors. The inherent energy dependence in the GM detectors is minimized by carefully selecting the materials of construction. However, few detectors are sensitive enough to detect radiation at exposure rates below 20 μR/hr. Two types are predominant: the portable scintillation detector, which uses a sodium iodide

detector (sometimes referred to as a *micro-R* meter), and the high-pressure ion chamber. The high-pressure ion chambers available have air-equivalent walls that give them the same energy dependence as air. Dose rates are measured directly in roentgens, so this instrument is very similar to air wall ion chambers (the primary standard for measuring exposure) and can be considered a secondary standard. However, high-pressure ion chambers are heavy and bulky and thus have limited portability. In contrast, the micro-R meter is energy dependent and generally overresponds to low-energy (less than 200-KeV) radiation. One way to account for this is to calculate a correction factor by taking readings at a few locations in the field with both instruments. The more portable micro-R meter can then be used to take the desired number of measurements at more dispersed locations.

#### 7.3.1.6 X-Ray Measurements

Thin NaI detectors and Phoswich detectors (a thin scintillator attached to a thick one) have been developed to measure low-energy X rays (particularly those near 17 KeV) from plutonium isotopes. The thin NaI detector and the thin scintillator in the Phoswich detector reduce the effects from higher energy gamma radiation, and the thick detector in the Phoswich is used to eliminate remaining thin-crystal signals that occur simultaneously with pulses from the thick backup crystal. This maximizes the fraction of output that comes from the desired low-energy X rays. These detectors are used to detect plutonium when the fraction of Am-241 is not known (Am-241 is more easily detected and can be used as a benchmark if the relative amounts of Am-241 and plutonium are known) and when there is too much absorption to measure alpha radiation. This technique is limited, however, by absorption in the material because 1 cm of water will absorb about 80% of the incident X rays.

#### 7.3.1.7 Alpha and Beta Spectrometry

Alpha and beta spectrometry [in which surface barrier detectors such as Si(Li) are mounted inside of a vacuum chamber, a sample is placed in the chamber, and the chamber is evacuated] are techniques suited for an on-site laboratory. They are useful in identifying the radionuclides responsible for gross counts observed. Alpha spectrometry is used more often because alphas are monoenergetic and, therefore, more easily distinguished from each other.

This technique is primarily limited by self absorption in the sample. Self absorption can be avoided by collecting a thin sample (i.e., thin deposits on a filter paper) or by separating a thicker one. Thick-sample alpha spectrometry is a recently developed technique that allows some differentiation between alphas of different energies, in soil for example, without performing a separation (Lucas 1993).

#### 7.3.1.8 Liquid Scintillation

Liquid scintillation is adaptable for use in an on-site laboratory. It is valuable when radionuclides that emit low-energy beta radiation (e.g., tritium) are of concern, and it can be adapted to measure alpha radiation. Samples must be treated (preferably dissolved) to achieve compatibility

with the scintillation fluid. Sensitivities of 10 pCi/g wet and 500 pCi/l, which can be achieved for tritium and C-14, respectively, are much lower than those available using other techniques.

#### 7.3.1.9 Organic-Vapor Analyzers

Organic vapor analyzers are portable instruments used to measure organic vapors in air. Besides being employed for industrial hygiene purposes, they can be used to locate areas where organic contaminants are present, especially soil. One form, the gas chromatograph, can be used not only to locate organic contamination but also to identify the contaminant.

Surveying to detect areas where organics are present is done using photoionization detectors (PIDs) and flame ionization detectors (FIDs). These instruments draw a stream of air and expose it to ultraviolet light or hydrogen flame. Organic vapors present are ionized, and an increase in the ion current is observed that is proportional to the concentration of the vapor. A variety of instruments is available, with quoted sensitivities that range from 0.1 to 2,000 ppm. FIDs are generally sensitive to a wider range of organics and respond reliably over a wider range of concentrations. However, the flame in the FID can cause ignition if the gas mixture sampled is explosive.

Organic materials can be identified in soil, water, or air using a portable gas chromatograph. These range in size from 1 to 2 $ft^3$ and weigh from 25 to 50 lb. Air samples are drawn through a trap to collect the contaminants, which are then desorbed into the column. Alternately, a sample can be injected directly into the column through a port provided. Sensitivities are as low as 0.1 ppb, and libraries of up to 48 common organic compounds are available. The gas chromatographic can also detect other compounds quantitatively if a sample of those compounds is available for calibration.

#### 7.3.1.10 Mercury-Vapor Detection

Mercury vapor can be detected for characterization purposes as well as for industrial hygiene purposes. Analyzers are available which use the absorption of ultraviolet light or the thin gold foil technique for detection. Instruments using gold foil have a sensitivity of 0.003 $mg/m^3$ and can be read in seconds. The gold foil technique relies on the increased resistivity resulting from the adsorption of metallic mercury from an air sample and hence is only sensitive to elemental mercury. Ultraviolet analyzers can detect organic mercury as well. However, they are sensitive to the presence of co-contaminants such as cigarette smoke, organic solvents, particulates, and water vapor. Gold foil detectors operate on both batteries and 110-V power.

### 7.3.2 Active Measurements

Active measurement techniques are those in which a material is exposed to something, typically a beam of radiation, and the modified beam or some other emission caused by a secondary effect is measured. Active measurement techniques include those using X, gamma, and neutron radiation for exposure.

#### 7.3.2.1 Real-Time Radiography

Real-time radiography (RTR) is roughly equivalent to the medical technique of fluoroscopy, in which the image on the fluoroscopic screen is viewed by a television camera. The object to be examined is placed between an X-ray tube and a detector (screen, image intensifier, and television camera). The image formed is viewed on a real-time basis so that motion can be detected. For example, the movement of a liquid contained in the middle of a waste form can be seen if the drum is tipped or jostled.

RTR is widely used and is appropriate for most waste characterization because it is a relatively quick and inexpensive technique. However, RTR is somewhat limited. First, the information is two-dimensional, so the images of objects in the foreground overlap the images of objects further back. Second, no more than 60 levels of intensity can be distinguished, so contrast is restricted. In addition, there is a functional maximum thickness and density of the material to be examined that is determined by the energy of the X rays. Higher X-ray energy is required for greater thicknesses or densities. Energies commonly available for RTR range up to approximately 400 kVp. This is enough energy to penetrate 4 in. of steel or 20 in. of concrete. Hence, a thicker object like a B-25 box or more dense objects cannot be examined.

Linear accelerators are available for producing X-ray beams with energy from 1 to 15 MeV (Varian 1993) for examination of up to the equivalent of 24 in. of steel. Commercially available linear accelerators producing beams with energies of 4 and 6 MeV are van mounted and therefore suitable for field use. At these energies, radiographic images meet ASTM standards through 10 in. of steel (ASTM E 142). Alternates to the linear accelerators are Co-60 sources and a 6-MeV betatron. Selection should be based on the focal spot size (a smaller spot gives a sharper image) and the output intensity (a higher output yields a shorter examination time).

#### 7.3.2.2 Digital Radiography

Digital radiography (DR) outputs a digital signal rather than a visual image, which allows higher contrast resolution because the X-ray intensity can be divided into as many as 65,000 levels (compared to the approximately 60 levels discernable visually). Data gathered by DR are also amenable to computerized image enhancement, so although the output is still two-dimensional, it can have a much enhanced contrast. The measurement system for DR usually consists of a linear array of small detectors moved past the object along with the X-ray tube and the electronic data handling package. Accelerator-produced X rays can also be used for DR when needed for thick sections. Because of the required number of detectors and the data handling required, DR is more expensive than RTR. DR is also a slower technique.

#### 7.3.2.3 Computed Tomography

Computed tomography (CT) extends the DR concept to provide a third dimension to output. RTR and DR provide a two-dimensional picture of the material as seen from a single point; CT provides a cross section through the object parallel to the line of sight (direction of the X-ray

beam). This is accomplished by taking a series of exposures at different angles, each time recording the digitized result from individual X-ray detectors arranged in a linear array. The data are then combined mathematically to form the two-dimensional, cross-sectional image. In contrast to RTR and DR, the images from several items in the line of sight do not overlap.

Any number of cross sections can be generated, depending on the need and expense. Viewing these slices in sequence gives a three-dimensional representation of the material in the package. The disadvantages of CT are the equipment cost and the time required. Any of the X-ray sources useful for RTR can also be used for CT.

#### 7.3.2.4 X-Ray Fluorescence for Lead

A recently developed technology is measuring characteristic X rays to detect heavy metals. The material being examined is exposed to radiation, which causes the exposed material to fluoresce (i.e., to emit radiation characteristic of energies unique to the composition of the material), and this radiation is measured. The highest energies of characteristic radiation from lead (a common material of concern in decommissioning) are between 72 and 89 KeV. These are X rays, hence the name X-ray fluorescence.

At least one portable X-ray fluorescence detector is commercially available for measuring lead. The precision quoted is ±0.10 mg/cm$^2$ for common building materials and ±0.15 mg/cm$^2$ for lead on a metal substrate.

#### 7.3.2.5 Passive/Active Neutron Measurements

Active and passive neutron measurements can give information to correct for the various moderators in a waste when the two are used together. They can also be used to determine the amount of fissile material present. A neutron generator, commonly a Zetatron (D+T) sealed neutron generator tube, exposes the material to pulses of neutrons. Alternate neutron sources are a proton accelerator with a lithium foil target [which gives greater numbers of neutrons having lower energies (Karvinen 1992), thereby reducing the requirements for shielding and moderation] and the proprietary "External Source" reputed to give a 500% improvement in useful fluxes (Caldwell, et al. 1986).

Both thermal neutrons and neutrons with energies above about 0.4 eV (which penetrate cadmium detector covers) are measured at different times after each pulse. The distinction between the numbers of neutrons of different energies gives information about the moderation of the neutrons in the material. The rate at which the neutron flux decreases after each pulse (referred to as differential dieaway) is related to the amount of moderator and absorbers present; fast neutron coincidences following each pulse are used to determine the amount of fissile material present.

One supplier has developed a commercially available system that uses both passive and active techniques. Algorithms are used to relate the differences in neutron spectrum and system neutron lifetime to the quantity of fissile and TRU material present. This system has been able to

quantify plutonium contents in drums ranging from 0.5 to 200 g in materials with widely varying concentrations of absorbers and moderators (Caldwell, et al. 1991). Systems for passive/active neutron measurement have also been developed for in situ monitoring and for material volumes larger than a 55-gal drum. The largest system to-date accommodates a 5-ft by 6-ft by 10-ft shape and has been able to detect concentrations of TRU down to 5 nCi/g (West, et al. 1991).

#### 7.3.2.6 Neutron Signal Imaging

Neutron signal imaging is a recently developed extension of the passive/active neutron measurement technique that provides greater sensitivity. It can account for differences in measurements caused by variations in the location of the source (plutonium for example) in the waste material. Measurements are taken similar to those taken in passive/active neutron systems, except that information is also collected about the angular, radial, and height dependence of the neutron flux. The results are managed mathematically to determine the most likely distribution and quantity of neutron-generating material. Initial work indicates that this system can provide a sensitivity of 0.2-mg Pu for matrices with low concentrations of absorbers and can be three times more accurate than passive/active measurements (Caldwell, et al. 1993).

#### 7.3.2.7 Californium-252 Shuffler

This technique is used to determine the amount of fissile material in a 55-gal drum. The material is exposed periodically to neutrons from the spontaneous fission of Cf-252 by moving the source in and out of its shield and measuring the neutrons emitted from the material when the source is in the shield. These neutrons are the delayed neutrons from fissions caused when the source is not in the shield. Repeated measurements allow enough data to be collected to achieve statistical significance. The shuffler operates with an irradiation/exposure time of 10–15 s and a counting time of 5–10 s each cycle. The technique has a sensitivity of less than 0.1 g of U-235 for high-density materials. Measurements in liquids, particularly oils, are more difficult.

#### 7.3.2.8 Neutron-Capture Gamma Measurement

This technique measures gamma rays from the capture of neutrons of various elements that are hazardous by themselves or components of hazardous materials (e.g., chlorine in PCBs).

This technique has been developed commercially for measurements of bulk material. A Cf-252 source supplies the neutrons, and a large, approximately 6-in.-diameter, sodium iodide crystal is used to detect the captured gamma rays. The system can be operated with materials added using a 12-in. by 18-in. chute, a 2- or 3-ft-wide belt (up to 8 in. deep), or in 20-lb buckets. Almost any common element can be detected which occurs in concentrations from 0.1% to 50%. Examples are iron, chromium, lead, and titanium (Woodward 1991).

## 7.4 Other On-Site Laboratory Analyses

On-site laboratory analyses for nonradioactive materials may also be needed to support decommissioning activities. These activities include the following:

- NPDES permit analyses,
- airborne effluent analyses, and
- treatment chemistry analyses.

Many supporting analyses will be specific to the needs of individual decommissioning projects and could become too numerous to list. Some of these analyses, however, may be common to a number of decommissioning projects. The following are common non-nuclear analyses amenable to on-site laboratory analysis at a decommissioning site:

- pH;
- total suspended solids;
- total dissolved solids;
- gravimetric;
- total hydrocarbons;
- volatile hydrocarbons;
- nonvolatile hydrocarbons;
- biological oxygen demand;
- chemical oxygen demand;
- carcinogenic metals in air and water (chromium, arsenic, cadmium, beryllium and silver);
- acid radicals in air and water (sulphate, sulphide, carbonate, nitrate, and cyanide ions);
- benzene, ethylene, toluene, and xylene in air; and
- asbestos in solids.

## 7.5 Off-Site Laboratory Analyses Available

Table 7.2 lists radiological analyses of interest to a decommissioning planner which are available in off-site laboratories. The table also provides a typical minimum sensitivity available and minimum sample size required. The list of analyses is not exhaustive; only those analyses that are done often enough to be offered as standard laboratory fare are included. If other unusual or particularly difficult analyses are desired, these arrangements can often be made with a laboratory on a case-by-case basis. For example, tritium ($^3H$) analyses are quoted for measurements in water or water extracted from a solid, but special arrangements would be required to determine the tritium concentration in oil because the laboratory would have to combust a sample and collect the water formed to perform the analysis. Some commonly available analyses are not included in this list (e.g., I-131) because of their very limited usefulness in a decommissioning project. Analyses given in this table include those analyses discussed in Section 7.3 as being applicable to an on-site laboratory.

Off-site chemical and physical laboratory analyses commonly useful to decommissioning are listed as follows. (However, a general discussion of such techniques is a field in itself and is not included in this handbook.)

- materials with hazardous-waste characteristics
  - ignitability
  - corrosivity based on pH
  - corrosivity based on reaction with steel
  - total sulfide
  - total cyanide
  - TCLP
    - ◊ volatiles
    - ◊ semivolatiles
    - ◊ pesticides
    - ◊ herbicides
    - ◊ metals
    - ◊ total
- underground storage tanks:
  - total hydrocarbons
  - total petroleum hydrocarbons—diesel range

## Table 7.2 Standard Radiochemical Analyses Available from Off-Site Laboratories

| ANALYSIS | LIQUID MATRIX | | SOLID MATRIX | |
|---|---|---|---|---|
| | Sensitivity (pCi/l) | Min. Aliquot (l) | Sensitivity (pCi/g) | Min. Aliquot (g) |
| Gross alpha | 1.0 | 0.2 | 10.0 | 0.1 |
| Americium-241 | — | — | 0.2 dry | 100.0 |
| Americium isotopic | 1.0 | 1.0 | 0.6 dry | 2.0 |
| Curium isotopic | 1.0 | 1.0 | 0.6 dry | 2.0 |
| Neptunium-237 | 1.0 | 1.0 | 0.6 dry | 2.0 |
| Plutonium isotopic | 1.0 | 1.0 | 0.6 dry | 2.0 |
| Plutonium-241 | 20.0 | 1.0 | 10.0 dry | 2.0 |
| Polonium-210 | 1.0 | 1.0 | 0.6 wet | 2.0 |
| Radium-226 | 1.0 | 1.0 | 0.2 dry | 100.0 |
| Radium-228 | 3.0 | 2.0 | 0.2 dry | 100.0 |
| Thorium isotopic | 1.0 | 1.0 | 0.6 dry | 2.0 |
| Uranium | 1.0 µg/l | 0.005 | 0.01 µg/g dry | 0.5 |
| Uranium isotopic | 1.0 | 1.0 | 0.6 dry | 2.0 |
| Carbon-14 | 100.0 | 0.05 | 10.0 wet | 1.0 |
| Calcium-45 | 6.0 | 1.0 | — | — |
| Chlorine-36 | 10.0 | 1.0 | — | — |
| Iodine-125 | 20.0 | 0.1 | — | — |
| Iodine-129 | 10.0 | 0.1 | 1.0 | 50.0 |
| Nickel-6 | 100.0 | 0.05 | 10.0 | 1.0 |
| Lead-210 | 1.0 | 0.5 | 2.0 | 100.0 |
| Promethium-147 | 50.0 | 0.15 | — | — |
| Hydrogen-3 | 20.0 | 0.1 | 500.0 pCi/l | * |
| Ruthenium-106 | 20.0 | 1.0 | — | — |
| Strontium-90 | 5.0 | 1.0 | 1.0 | 2.0 |
| Technetium-99 | 30.0 | 0.1 | 15.0 | 1.0 |
| Iron-55 | 100.0 | 1.0 | — | — |
| Gross gamma | 4.0 | 0.2 | 10.0 | 0.2 |
| Gamma isotopic | 20.0 | 1.0 | 0.2 | 100.0 |

* Assumes enough sample to extract 0.005 liter of water.

- total petroleum hydrocarbons—gasoline range
- total recoverable petroleum hydrocarbons
- halogenated volatile organics
- aromatic volatile organics
- total lead
- organic lead

- other:
  - PCBs
  - dioxins
  - asbestos

These analyses are performed according to EPA standard methods, which specify the sample size and sensitivity required (DOC) 1986.

This is a partial list, because an analysis may be desired for any individual chemical or for the extract of any land-ban chemical listed in 40 CFR 268. Other analyses might be required for (1) effluents from treatment processes used during decommissioning or (2) building ventilation to demonstrate compliance with the Clean Air and Clean Water acts. In addition, there are requirements for analyses to support other legislation, rules, or regulations such as SDWA, CERCLA, SARA, and RCRA, that may be applicable to a specific decommissioning project.

## 7.6 Other Techniques

There are a number of techniques commonly used in other fields that could be used as part of a characterization program. However, they are not commonly considered characterization tools. Some of these techniques are listed for information as follows:

- ground-penetrating radar,
- soil-conductivity meter,
- magnetic-anomaly detector,

- microgravity measurements, and
- seismic profiling.

In addition, there are techniques that could be required for specific waste to demonstrate compliance with waste acceptance criteria at a proposed disposal facility. Some of these are listed for information as follows:

- percent pyrophoric material in waste,
- thermal output from waste,
- gas generation rate in waste,
- particle size distribution, and
- percentage of void space in waste package.

## 7.7 Conclusion

Characterization of the nuclear facility is essential to properly planning and conducting the decommissioning project. Characterization is usually associated with the determination of the quantity and extent of contamination—both radiological and hazardous—in the facility. Characterization and surveys are performed initially to identify and locate the contaminants and to assess local dose rates. During decommissioning, characterization is done to verify the decontamination efficacy and to certify the contaminants in waste packages. Characterization is also needed at the conclusion of the project to verify the removal of sufficient contaminants to allow the restricted or unrestricted release of the site. The rigor required for characterization varies. Little precision may be needed initially when the object is to determine whether contamination is present. However, a much higher degree of assurance is needed when certifying waste packages and when showing that the release criteria (for both the site and materials) have been met. This chapter provides information relevant to the preparation of the plans for characterization and the techniques available for the detection of the contaminants.

## 7.8 References

AEC. 1974. *Termination of Operating Licenses for Nuclear Reactors.* Regulatory Guide 1.86. U.S. Nuclear Regulatory Commission. Washington, D.C.

ASTM Standard E 142. *Method for Controlling Quality of Radioactive Testing.* American Society for Testing and Materials. Philadelphia.

Berger, J. D. *Manual for Conducting Radiological Surveys in Support of License Termination,* NUREG/CR-5849, ORAU-92/C57, Draft, 1993.

Caldwell, J. T., et al. 1993. "Imaging Boxed Waste Assay System." Presented at the Emerging Technologies in Hazardous Waste Management V Meeting, Atlanta, September 27–29, 1993.

Caldwell, J. T., et al. 1991. "Greatly Improved Transuranic Waste Assay Accuracy Using Neutron Signal Imaging." Presented at the Winter Meeting of the American Nuclear Society, San Francisco, November 10–14, 1991.

Caldwell, J. T., et al. September 1986. *The Los Alamos Second-Generation System for Passive and Active Neutron Assays of Drum Size Containers.* La-10774-MS.

10 CFR. Revised January 1, 1993. *Energy.* U.S. Government Printing Office. Washington, D.C.

40 CFR. Revised January 1, 1993. *Protection of Environment.* U.S. Government Printing Office. Washington, D.C.

DOC (U.S. Department of Commerce). November 1986. *Test Methods for Evaluating Solid Waste.* SW-846. U.S. Department of Commerce. Washington, D.C.

DOE (U.S. Department of Energy). Revised June 5, 1990. *Radiation Protection of the Public and the Environment.* Order 5400.5. U.S. Department of Energy. Washington, D.C.

Eberline. *Small Object Alpha Contamination Monitor.* Eberline, A Subsidiary of Thermo Instrument Systems, Inc. Santa Fe, New Mexico.

Gilbert, Richard O. 1987. *Statistical Methods for Environmental Pollution Monitoring*, Van Nostrand Reinhold, New York, New York.

Gilbert, Richard O. July 1992. *Methods for Evaluating the Attainment of Clean-up Standards*, volume II, "Ground Water." EPA 230-R-92-014.

Gilbert, Richard O. February 1989. *Methods for Evaluating the Attainment of Clean-up Standards*, Volume I, "Soils and Solid Media." EPA 230/02-89-042.

Gilbert, R. O., and J. C. Simpson December 1992. *Methods for Evaluating the Attainment of Clean-up Standards*, Volume III, Rev. 1, "Reference-Based Standards for Soils and Solid Media." PNL 7409.

Karvinen, J. R. 1992. "Radiological and Hazardous Material Measurement System." *Proceedings on the Symposium on Waste Management.* Waste Management '92, Tucson, Arizona, March 1–5, 1992.

Lucas, A. C. 1993. "Thick Sample Alpha Counting." Presented at the Annual Meeting of the Health Physics Society, July 13, 1993.

MacArthur, D. W., et al. May 1993. "LRAD-Based Alpha-Particle Contamination Monitoring of Personnel and Equipment." *Nuclear Technology* 102.

Redus, R. H., et al. 1992. "A Nuclear Survey Instrument with Imaging Capability." *IEEE Transactions on Nuclear Science* 39:4.

Shonka, J. J., T. E. Bennett, and C. J. Misko. March–April 1993. "A New Technology for Detection of Hot Particles." *Nuclear Plant Journal.*

Thompson, S. K. 1992. *Sampling*. John Wiley & Sons.

Varian Medical Equipment. *High Energy X-Ray Applications for Nondestructive Testing.* Palo Alto, California.

West, M. L., et al. 1991. "Nondestructive Assay Applied to the Decommissioning of a Former Plutonium Fuel Fabrication Facility." Presented at the Winter Meeting of the American Nuclear Society, San Francisco, November 10–14.

Woodward, R. C. May 1991. "On Line Bulk Material Analysis: The Alternative to Mechanical Sampling." *Bulk Solids Handling* 2:2.

# 8.0 Waste Treatment

# 8.0 WASTE TREATMENT

Waste treatment is the last processing step or sequence of steps prior to the disposition of the treated material. Section 8.1 gives an introduction to the general aspects of waste treatment that have to be addressed by the decommissioning planner. Solid waste treatment, including stabilization and volume reduction techniques, is described in Section 8.2. Sludges, a transition between solids and liquids, are addressed in Section 8.3. This section includes dewatering equipment. Section 8.4 describes the technologies required to clean water used in decommissioning so that it can be released to the environment. Gaseous effluent from the decommissioning project is addressed in Section 8.5, as is the processing of gas or vapor resulting from other waste treatment activities. Thermal treatment, including drying, evaporation, and combustion of waste materials, is addressed in Section 8.6, along with the appropriate air pollution controls.

## 8.1 Introduction

The need for waste treatment can be determined from the material disposition matrix presented in Chapter 6. In that chapter it was suggested that the acceptance criteria be defined for each pertinent matrix square. Decontamination (Chapter 9) and waste treatment steps are then defined to convert the material associated with that square to a waste meeting the acceptance criteria for the planned disposition. The materials to be treated include both existing materials to be disposed of and the by products of any planned decontamination process.

Examples of the kinds of treatment that might be required are as follows:

- solidification,
- removal of water,
- immobilization of the contaminants,
- modification of the contaminant (to a less toxic form),
- destruction of the contaminant (organics),
- preparation for subsequent treatment,
- reduction of waste volume,
- purification of water for reuse or discharge, and
- separation of a contaminant from a bulk matrix.

The final two treatment types have special value in providing for the recycle and/or reuse of the material being treated.

The choice of a waste treatment technology is driven first by the acceptance criteria one has to meet. However, as mentioned in Section 6.4, when an acceptance criteria is unattainable or can only be realized with great expense or difficulty, one may need to investigate another possible disposition. Further work would then be directed toward achieving compliance with a more realizable acceptance criteria. Factors that should be considered in selecting a waste treatment process for use in a decommissioning project include the following:

- the maturity of the technology,
- waste minimization,
- reliability,
- maintainability,
- operability,
- cost, and
- safety.

Waste treatment technology in the early stages of development might not be effectively applied within the cost and schedule constraints of the project. The technology should be effective in minimizing the volume of both primary and secondary wastes or in reducing the amount of the more toxic contaminants. The system needs to be reliable and maintainable, because frequent and lengthy outages would jeopardize schedule and increase costs. Difficult-to-operate systems require additional personnel and training with the commensurate increase in costs. The expense of installation and the capital cost of equipment need to be considered and weighed against the volume of the waste to be treated. Finally, the safety of the system has to be addressed. If the system would (1) cause excessive or unnecessary doses to operating personnel, (2) involve the use of toxic chemicals, or (3) generate poisonous gases, an alternate system or disposition might have to be chosen.

A variety of treatment technologies are introduced so that the planner can make an initial identification of those processes needed for the decommissioning project. Four major parts of this chapter include (1) the treatment of solids, (2) the treatment of sludges for gross water removal, (3) the treatment of liquids to remove contaminants, and (4) thermal treatment.

The treatment of solids is divided into three categories: stabilization, shredding, and compaction; stabilization, in turn, is divided into five classes. They are inorganic, organic, macroencapsulation, organic polymerization, and vitrification. The treatment of sludges is limited to techniques for removing gross amounts of water.

Liquid processing to remove both suspended and dissolved contaminants is further divided into four sections: filtration, membrane technology, ion exchange, and carbon absorption. The first technologies are effective in removing large particles; the latter, for removing fine particles and dissolved material. For liquids containing a mixture of various-sized contaminants, it is often necessary to use two or more treatment steps.

Thermal treatment is divided into low-temperature techniques (drying), medium-temperature techniques (organic separation), and high-temperature treatment (incineration). Table 8.1 provides a brief overview of key waste treatment technologies discussed in this chapter and their applications for decommissioning.

## Table 8.1. Waste Treatment Technologies

| SOLID PROCESSING (8.2) | | |
|---|---|---|
| **Technology** | **Application** | **Remarks** |
| **Stabilization/ Solidification (S/S)** (8.2.1) | To prepare hazardous constituents for discard in a low-cost, environmentally acceptable manner | S/S technology can be applied to liquids, sludges, and solids. Wet and dry admixtures are used, with the dry admixtures representing 95% of admixture materials, excluding water |
| Wet Admixtures | Added to waste to prevent free-standing water and/or stratification in the product before hardening | Sodium silicate is frequently used because it is a quick-gelling substance and is used with low solids and/or rapid settling waste streams |
| Dry Admixtures | Added to waste to promote settling and hardening for disposal | Cement is the primary ingredient in many S/S processes because of its known settling and hardening reactions and its consistent composition |
| **Inorganic S/S** (8.2.1.3) | | |
| Cement-Based S/S | Process in which portland cement is added to the waste to form a granular material to a cohesive solid depending on the amount of reagent added | Water may be added if not already present to ensure proper hydration reactions for cement bonding. It has been applied to wastes containing various metals, oils and sludges, resins, plastics, asbestos and many other materials |
| Pozzolanic S/S | Involves siliceous and aluminosilicate materials, which form a cementlike structure with the contaminants entrapped in the pozzolan matrix | Examples of pozzolans are fly ash, pumice, lime kiln dusts, and blast furnace slag. Pozzolanic reactions are generally much slower than cement reactions |

## Table 8.1. Waste Treatment Technologies (Continued)

| SOLID PROCESSING (8.2) | | |
|---|---|---|
| **Technology** | **Application** | **Remarks** |
| **Organic S/S** | | |
| Thermoplastic S/S (8.2.1.4) | A microencapsulation process that is used to bind the waste constituents into a stabilized/solidified mass | A thermoplastic material such as asphalt (bitumen) or polyethylene is used to bind the waste. A chemical reaction between the waste and the encapsulating material does not occur |
| Macroencapsulation (8.2.1.5) | A process that places the stabilized/solidified waste into an overpack drum | Wastes appropriate for macroencapsulation include low-level nuclear waste, electroplating sludge, coal scrubber ash, concentrated PCBs, and dioxins |
| Organic Polymerization S/S (8.2.1.6) | Immobilizes the hazardous constituents utilizing a polymer formation | Constituents treated with this technology include organic chlorides, phenols, paint sludges, cyanides, and arsenic |
| **Vitrification** (8.2.1.7) | Solidifies into a glassy matrix radioactive or hazardous materials | For radioactive materials, used for geologic disposal of high level waste from the reprocessing of spent nuclear fuel. For hazardous materials, in situ vitrification is a treatment in place for buried wastes |
| **Compaction** (8.2.2) | Compressible wastes such as scrap metal, heavy mixture of waste, plastic material and light mixtures of waste | Mechanical compaction is based on hydraulic press technology; conventional in-drum presses use 75–150 psi and supercompactors use 4,000–22,000 psi |
| **Shredders** (8.2.3) | Volume reduction of materials with large void spaces | Size restrictions for most shredders, but will efficiently reduce the size of many items with large void-to-material ratios (i.e., pipes, drums) |
| **Smelting and Melt Refining** (8.2.4) | Melting of various types of metal parts | The contamination is sometimes removed in the slag formed on the surface of the melt |

## Table 8.1. Waste Treatment Technologies (Continued)

| SLUDGE PROCESSING (8.3) | | |
|---|---|---|
| **Technology** | **Application** | **Remarks** |
| **Mechanical Dewatering Devices** (8.3.1) | An operation employed to produce a condensed waste for disposal or destruction. Dewatering devices produce a cake with solids content of up to 60% with a solid capture rate of 90–95% | The choice of a dewatering device should be evaluated on a site-by-site basis. Sludge characteristics should dictate the type of dewatering device employed. Filter aids can be applied for more efficient operation |
| Belt Filter Press | Belt press filtration is a continuous pressure-driven dewatering device | Best utilized when the feed contains coarse, fast-settling, solid particles. Belt filter presses are also useful when the influent slurry contains a wide variety of particle sizes. It has the greatest need for the optimization of the polymer dosage as a function of the incoming sludge characteristics |
| Plate and Frame | The plate and frame module is a batch pressure driven dewatering device | When the feed sludge is properly conditioned, the plate and frame module can be very useful in breaking emulsions |
| Rotary Drum Vacuum Filters | A continuous mechanical dewatering device utilizing a rotating drum and a vacuum | Does not produce as effective results as other dewatering devices both statistically and economically |
| Centrifuges | Applicability ranges from a thickener preceding a dewatering device or being used as a dewatering device during periods of downtime for the dewatering operation | The centrifuge has a high throughput capability, but variations in influent conditions have traditionally caused operational problems |

## Table 8.1. Waste Treatment Technologies (Continued)

| SLUDGE PROCESSING (8.3) | | |
|---|---|---|
| **Technology** | **Application** | **Remarks** |
| Conditioning (8.3.2) | Conditioning a sludge in the form of coagulation and flocculation before dewatering creates a better separation between the solid and liquid phases | A coagulant added to a sludge feed neutralizes the negative net charge usually affiliated with sludges. Flocculation chemicals are then added to promote a well-defined particle distribution for the dewatering unit |
| **LIQUID PROCESSING (8.4)** | | |
| **Technology** | **Application** | **Remarks** |
| Clarifiers (8.4.1) | Designed to separate suspended solids from liquid water by gravity settling | Generates a sludge containing almost all the suspended solids in the water. The water can be tested for radioactivity and siphoned off and released if the concentration of radioactive contaminants in the water are below release levels |
| Filters (8.4.2) | To remove suspended solids, thus protecting downstream operations from disfunction | In addition to removing unsettleable solids, filters are usually placed before and after each unit operation for protection purposes |
| Surface | To remove suspended solids from a waste stream by forming a cake (cartridge filters) | Can be placed in line and are available in various pore sizes and media. Two or more filters are needed with high suspended solids loading (<1,000 ppmm). Possible exposure to personnel may occur with replacement |
| Depth | Extraction of suspended solids within the pores of the media (granular media filters) | Granular media filters are applied to liquid containing less than 100 ppmm of suspended matter that is less than 100 microns |

## Table 8.1. Waste Treatment Technologies (Continued)

| LIQUID PROCESSING (8.4) | | |
|---|---|---|
| **Technology** | **Application** | **Remarks** |
| **Membranes** (8.4.3) | Designed to filter suspended solids from 1.0 to 0.0001 micron | Macrofiltration, ultrafiltration, hyperfiltration (reverse osmosis), pervaporation, gas separation, and phase contact are the recognized forms of membrane separation |
| **Ion Exchange** (8.4.4) | Extraction of dissolved solids and radionuclides from wastewater | Economics may dictate the retrieval of certain metals. Ion-exchange resins are selected using treatability studies on a case-by-case basis |
| Mixed Bed Exchanger | Extraction of both cations and anions from a waste stream | Ideal for small amounts of influent concentrations with a small flow rate. May be used as a polishing unit from the traditional cation/anion exchanger |
| Cation/Anion Exchanger | Extraction of small amounts of volatile and semivolatile organic compounds | Conventional design utilizes a two-bed cation/anion deionizing system. Zeolite resins are those usually used for radionuclide extraction |
| **Carbon Adsorption** (8.4.5) | Removes semivolatile and small amounts of volatile substances from gaseous or liquid waste streams | Can remove a wide variety of organics unselectively with high removal efficiencies and is tolerant of concentration and flow rate variations |
| Carbon Adsorption (Liquid Phase) | Extracts soluble organics from aqueous waste streams | Systems are constructed in the fixed- and pulse-bed forms that can be constructed in parallel or series |
| Carbon Adsorption (Vapor Phase) | Extracts dilute soluble organics in the vapor phase from a gas waste stream | Isotherms reflect that the carbon adsorptivity is greater at smaller temperatures. When the relative humidity is high in the influent airstream, the adsorptive capacity of carbon decreases dramatically |

## Table 8.1. Waste Treatment Technologies (Continued)

| GASEOUS PROCESSING | | |
|---|---|---|
| **Technology** | **Application** | **Remarks** |
| Effluent Processing (8.5.1) | HEPA filtration to remove radioactive particulates from effluent air | If airborne radioactive iodines are present, charcoal absorbers are required in addition to HEPA filters |
| Gas/Vapor Processing (8.5.2) | Separating and collecting gases or vapors from other processing activities | Various techniques exist; usually they are included in the equipment performing the original function |
| **THERMAL TREATMENT (8.6)** | | |
| **Technology** | **Application** | **Remarks** |
| Low-Temperature Treatment (8.6.1) | The primary focus of low-temperature treatment is water evaporation or "drying" at temperatures below 300°F | Thermal drying is more expensive than mechanical dewatering but can consistently produce better results when the solids content of the sludge is high and free water is not present. Thermal sludge dehydration systems can also be placed in series with dewatering devices for optimum water extraction |
| Medium- Temperature Treatment (8.6.1) | The focus of medium-temperature treatment is to evaporate the organic constituents in the sludge at temperatures between 300°F and 1,400°F | Some low-molecular-weight organics will evaporate below 300°F; therefore, if present, they will be separated from the solids along with the water |

## Table 8.1. Waste Treatment Technologies (Continued)

| THERMAL TREATMENT (8.6) | | |
|---|---|---|
| **Technology** | **Application** | **Remarks** |
| High-Temperature Treatment (8.6.2) | High-temperature treatment focuses on combustion technology and its derivatives: starved air, pyrolysis, and oxygen enhancement in this treatment organics are converted to water and carbon dioxide at temperatures between 1,400°F and 2,200°F | The predominant treatment process is incineration, which is available in many different configurations. These incineration systems are divided into combustion systems and air pollution control systems |
| Air Pollution Control Systems (8.6.3) | Removes pollutants generated by thermal treatment processes | These systems also require radioactive material collection systems at the exhaust of the control system |

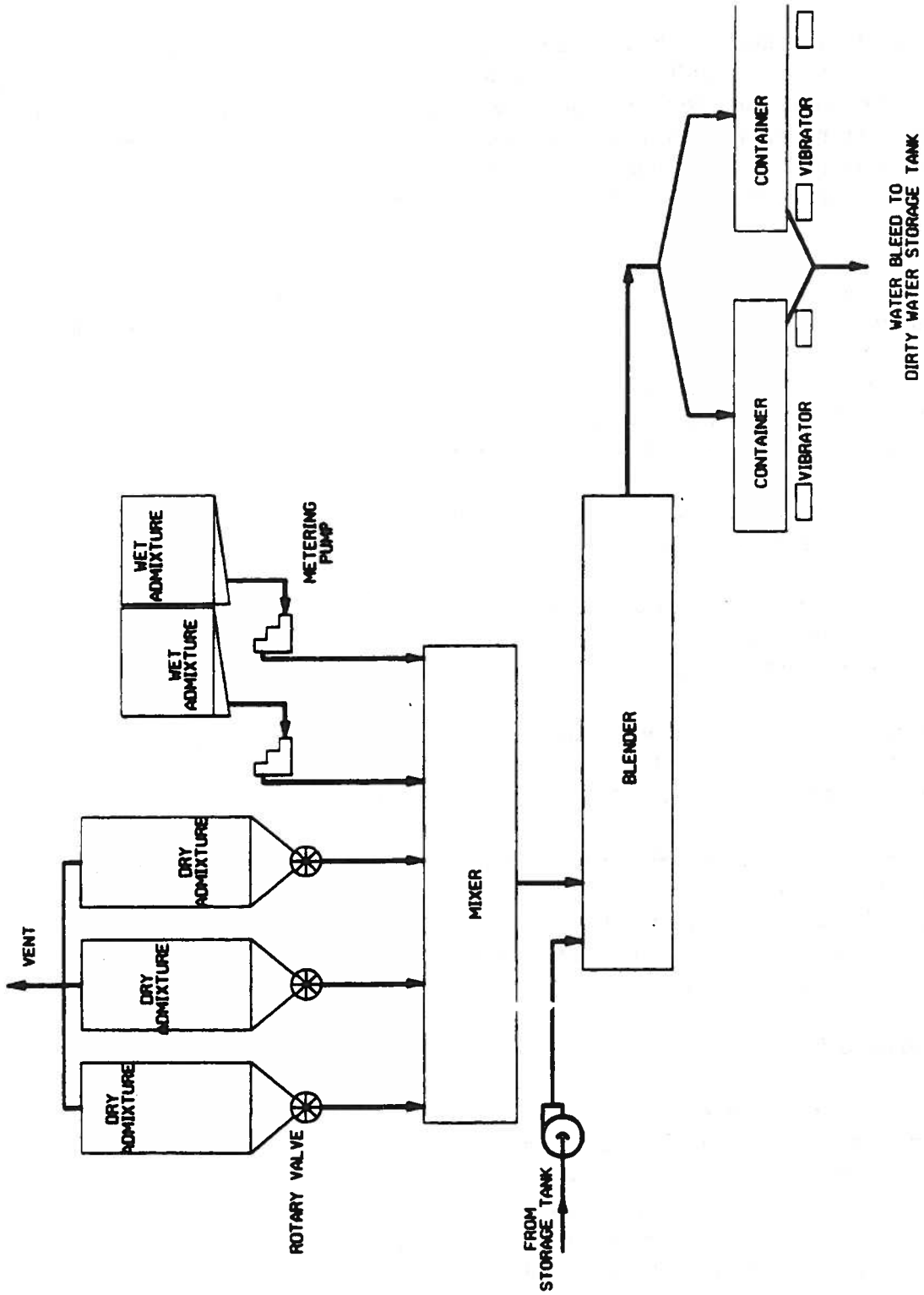


**Figure 8.1. Typical stabilization process flow schematic**

the formulation. Most of the regulations pertaining to S/S technology are written around leachate measurements. This is why it is necessary to understand the leaching process and the tests used to measure it. Conner (1990) provides a more direct discussion on leaching.

The waste should be characterized in such a manner to determine applicability to regulations in terms of leachability characteristics and waste acceptance criteria at the final disposal site. The physical and chemical characteristics are required to conduct the treatability studies in order to determine the optimal formulation.

## Physical Waste Characteristics

The important physical characteristics of waste are listed here. These characteristics are necessary to determine the makeup of the S/S mixture.

- medium—aqueous, oil, solvent, etc.;
- physical state—solution, sludge, powder, etc.;
- phases/layering—none, bilayered, multilayered;
- total solids (%);
- suspended solids (%);
- type of solids—organic, inorganic, mixed;
- ease of wetting/surface tension; and
- specific gravity including bulk density (for solids), particle-size distribution, particle morphology, and viscosity.

## Chemical Waste Characteristics

Chemical properties are important for solidification. In this handbook, only the chemical effects on solidification reactions and on the properties of the S/S are discussed. The parameters of prime interest are as follows:

- pH—alkalinity/acidity;
- waste analysis:
  - metals—total,
  - metals—leached,
  - inorganics—total,

contaminated sludge, and chlorine product wastes that have been dewatered and dried (Kyles, Malinowski, and Staczyk 1987).

One S/S process appears very promising in terms of binding organic wastes. Recent investigations (Gibbons and Soundararajan 1988) indicate that organophilic binders truly bond with organic wastes, and when forced out, these waste molecules break down into smaller fragments. Furthermore, this process appears cost-effective when compared to incineration; since this process also uses cementitious materials, it can handle both organic and inorganic wastes.

#### 8.2.1.7 Vitrification

Vitrification is used whenever contamination is to be sealed into a glassy matrix for the long-term immobilization of the contaminant. It can be used in processing of waste as a plant process (Yoshioka et al. 1992) or as an in situ process (Quapp et al. 1992).

Vitrification as a plant process is accomplished by mixing the waste material with glass frit and heating to a temperature in excess of 2000°F. The mixture of glass frit and waste material is vitrified into a glassy matrix that is very durable and stable under irradiation. This technique is being used or developed in France, Britain, Japan, and the United States for the stabilization of high-level radioactive waste resulting from the reprocessing of spent nuclear fuel.

In situ vitrification occurs when electrodes are inserted around a buried area that contains waste material to be vitrified. Current is passed between the electrodes, heating the soil and waste materials. The soil and waste materials are melted and produce a glassy substance. The resultant waste form has been shown to meet existing regulatory requirements for the retention of characteristically hazardous materials. However, this technique is still under development and in some circumstances has not been successful at vitrifying the waste in the soil.

Vitrification of radioactive waste in a process plant is a method for treating this waste. However, currently this technique is used in processing high-level radioactive waste for geologic storage and is not currently used for treating low-level radioactive waste for surface disposal. In situ vitrification of buried waste materials is currently being tested and can be used for projects that are remediating contaminated soils. Both these technologies are quite applicable for specific radiological projects. However, neither one is particularly suited to decommissioning of nuclear facilities and related construction structures.

#### 8.2.1.8 Stabilization/Solidification Activity in the Various Environmental Protection Agency Regions

Table 8.2 lists sites where hazardous waste S/S processes have been used, are in use, or are being proposed to remediate hazardous wastes. This table presents pertinent information on each case study, including the location, the types and concentrations of the contaminants encountered, the amount of material processed, the type of processing used, the disposal location, and the nature

## Table 8.2. Stabilization/Solidification Case Studies

| Site | Contaminant (Concentration) | Treatment Volume | Physical Form | Chemical Pretreat-ment (Y/N) | Binder | Percentage Binder(s) Added | Treatment (Batch/ Continuous In Situ) | Disposal (On-Site/ Off-Site) | Volume Increase (%) | Scale of Operation |
|---|---|---|---|---|---|---|---|---|---|---|
| SC, Region IV | Zn, Cr, Cd, Ni | 6,600 $yd^3$ | Solids/soils | N | Portland cement | 20% | Batch plant | On-site | >Small | Full scale (delisting in progress) |
| Midwest, U.S. | Cu, Cr, Ni | 16,000 $yd^3$ | Sludge | N | Portland cement | 20% | In situ | On-site | >0 | Full scale |
| Phoenix, AZ | Pb, Cd | 150,000 $yd^3$ | Dry (landfill) | N | Portland cement and silicates | Varied 7–15% (cement) | Concrete batch plant | Landfill | NA* | Full scale |
| Alaska | Oil/oil sludges | 2,300 $yd^3$ | Sludges, variable | Y | Portland cement and proprietary | Varied 50+ | Concrete batch plant | On-site | >35% | Full scale |
| N.E. Refinery | Oil sludges, Pb, Cr, As | 100,000 $yd^3$ | Sludges, variable | N | Kiln dust (high CaO content) | Varied, 15–30% | In situ | On-site | >Varied, ~20% average | Full scale |
| Wood River | Oil/solids Cd, Cr, Pb | 90,000,000 gal | Sludges | Y | proprietary | NA, proprietary | Continuous flow (proprietary process) | On-site | Average 15% | Full scale (site delisted 1985) |
| Miami, FL | Oil sat: soil Pb—1,000 ppm PCBs—200 ppm As—1–200 ppm | 62,000 $yd^3$ (plus 5,000 tons of surface debris) | Soils | Y | Pozzolanic and proprietary | ~30% | Continuous feed (mixer proprietary) design | On-site | ~1% | Full scale |
| Vickery, Ohio | Waste acid PCBs (<500 ppm), dioxins | ~235,000 $yd^3$ | Sludges (viscous) | Y | Lime and kiln dust | ~15% CaO ~5% kiln dust | In situ | On-site (TSCA cells) | >~9%+ | Full scale |
| Wyandotte, MI | Various/combined | 20 million gal/yr | Various | N | Lime | | Continuous | Off-site (secure landfill) | | In-plant process |

## Table 8.2. Stabilization/Solidification Case Studies (Continued)

| Site | Contaminant (Concentration) | Treatment Volume | Physical Form | Chemical Pretreat-ment (Y/N) | Binder | Percentage Binder(s) Added | Treatment (Batch/ Continuous In Situ) | Disposal (On-Site/ Off-Site) | Volume Increase (%) | Scale of Operation |
|---|---|---|---|---|---|---|---|---|---|---|
| TX | Combined metals, sulfur, oil sludges, etc. | 90,000 gal (445 $yd^3$) | Sludges (synthetic oil sludges) | N | Portland cement and proprietary | NA | Continuous flow | On-site (secure landfill) | >Estimated 10% | Full scale |
| Chicago | Metals: Cr, Pb, Ba, Hg, Ag | 55 gal/batch (bench-scale study) | Various | | Proprietary | 10–40% | Batch mix (pug mill) | NA | >Variable | Bench scale |
| WI | Al—9,500 ppm<br>Ni—750 ppm<br>Cr—220 ppm<br>Cu—2,000 ppm | 3,000 $yd^3$ | Sludges | N | Lime | 10–25% | In situ | On-site landfill | >4–10% | Full scale |
| Virginia | Ketone-contaminated sediments | | Wet soil, sludges | N | Cement-base, thermo-plastic, polymer | Various | Various | | NA | Bench- scale only |
| Maine | Cr (>50,000 ppm<br>Pb (>1,000 ppm)<br>and organics | Varied | Sludge | | Fly ash, quicklime | 30% fly ash<br>10% quicklime | In situ | On-site | >15% | Pilot scale |
| Morganville, NJ | PCBs | 50 $yd^3$ | Soil | N | Cement, proprietary | NA | Batch | NA | NA | Pilot scale |

* NA — Data not available.

of the study (full scale, pilot scale, or bench scale). Cement was used in the majority of the case studies presented; pozzolanic materials were rarely used.

### 8.2.2 Compaction for Volume Reduction

The mechanical compaction of waste is straightforward and based on hydraulic press technology. The economics are attractive because costs for disposal are based on waste volumes and the occasional limitations on the availability of disposal volume.

Conventional in-drum compactors are designed to compact paper, cloth, glass, floor sweepings, and other low-level dry waste in a steel drum, typically the standard 55-gal drum. The hydraulic system operates in relatively low pressures of up to 1,600 psi. To load and compact a drum, it is placed on a support plate, which is then drawn into position under the rim. Loose waste is placed in the drum and is then compacted. The process is repeated until the drum is filled. Approximately 60,000 lb of force is applied to the waste using a 7-in.-diameter compacting positioner.

One in-drum compactor design incorporates an extension space above the drum to allow for loading of more material. The extension space adds 26 in. to the top of the drum. The space is evacuated by a built-in fan to prevent dust from escaping into the room and is operating when the compactor is turned on. The air to the fan is drawn through a series of filters, including a high-efficiency particulate air (HEPA) filter; used filters can be dropped into a drum without being touched by hand. A hinged worktable is swung into place and locked, clamping the drum and providing a seal for the drum extension space. Loose waste is then loaded in the drum and drum extension space. The exterior space door is closed and the waste compacted.

Conventional compactors produce a disc pressure of 75–150 psi; however, it was found that the average density of waste, as shipped, was about 30 lb/ft$^3$. The magnitude of force that is applied to the waste material is what distinguishes supercompactors from conventional compactors. Supercompactors operate on hydraulic pressures ranging from 4,000 to 22,000 psi. Heavy materials such as metal, concrete, rubble, and glass can be supercompacted to densities of about 150 lb/ft$^3$. Plastic waste can be compacted to 65 lb/ft$^3$, and a compacted mixture of waste consisting of plastic, rubber, paper, and cloth can approach 90 lb/ft$^3$. Supercompactors consist of three main components:

- main upper and lower plates and columns for containing the compaction stresses, comprising the main press structure;
- hard-faced internal surface or replaceable liner, referred to as the *mold assembly*; and
- the main cylinder, which has a main piston that drives the ram plate, which applies the force to the waste package.

Once the package is placed on the press, the mold surrounds the waste package, and hydraulic fluid drives the main piston and ram down onto the package. The mold is withdrawn, stripping the pellet product away from the mold's internal surface; the piston returns to its fully withdrawn position; and the pellet is removed from the press. Any liquid dispelled from the waste is collected below and is either routed to a collection tank or to a processing system.

The hydraulic systems provide power to the press and peripheral equipment. The press is operated by the main pumping systems, which are normally driven by 100 horsepower (hp) motors. Normally 15 hp motors drive the auxiliary pumping system for operation of the peripheral equipment. Filters of 5–10 μm remove particulates from the hydraulic fluid before delivery to the press and again on return to the reservoir. Heat exchangers are used to limit accumulation of heat as a result of pumping.

Volume reduction from supercompaction is indicated in Table 8.3.

**Table 8.3.**
**Volume Reduction from Supercompaction**

| Waste Materials | Volume Reduction Factor* | Pellet Density ($lb/ft^3$) |
|---|---|---|
| Scrap metal | 4–5 | 200–250 |
| Heavy mixture of waste | 3.5–5 | 100–150 |
| Plastic material | 2–3 | 50–70 |
| Light mixture of waste | 2.5–3.5 | 50–80 |

* The volume reduction figures are those associated with the crushed pellet and do not reflect the overpacking inefficiencies. The figures given for plastic and light mixed waste are for that packaged by in-drum compactors into drums before supercompaction.

In the United Kingdom, LLW was supercompacted for the first time in 1989. The goal for the trial at Winfrith was to process all available 200-liter drums of LLW. At Winfrith, LLW is categorized as compressible or noncompressible. Approximately 55% of the drums that were supercompacted had already been volume reduced in a conventional drum compactor with a reduction factor of 2.25. An average reduction factor of 4.5 was achieved for the supercompaction stage, but it ranged as high as 21. Half-height ISO freight containers were loaded with 160–191 pucks. A maximum of 115 drums were processed in a 12-hr work shift.

### 8.2.3 Shredders for Volume Reduction

The typical shredder consists of counter rotating shafts with numerous cutter wheels separated by spacers. The counter rotating shafts draw material through the shredder. Shaft speeds are usually less than 60 rpm, and the shafts do not rotate at the same speed. The low shaft speed maximizes cutting force using minimal energy. The differential shaft speeds ensure that the sides

of the cutter wheels are constantly cleared. Since cutting takes place on the entire circumference of all wheels, the differential shaft speeds also ensure even cutting edge wear on each wheel; the tooth of one wheel passes a different point on the opposite wheel on every pass until the rpm ratios repeat their cycles. This distributes the wear and heat evenly on the edges of the cutter wheels. Shredders are designed to automatically back up (i.e., reverse the cutter shafts normal rotation) when tramp (unshreddable) material is encountered in the waste. The shafts automatically reverse again and resume shredding. The reversing action sometimes positions the material differently, allowing the cutter's teeth to grab it and eventually shred it; otherwise the tramp material must be removed from the shredder. Figure 8.2 is photo of a typical shredder.

The shaft and cutter wheels are precisely aligned so that the cutter wheels intermesh, which allows the feedstock to be drawn through and torn apart. Cutter wheels are removable for replacement or rearrangement. Smaller particle size can be achieved by narrow cutter wheels (close spacing) and/or more teeth (hooks or knives) on each cutter wheel.

These units are electrically or hydraulically driven and are usually stationary; however, mobile units are available. Heavy mobile units may require an overweight trailer permit depending on State regulations. Control panels provide automatic control of the shredding process and require special operator training, which is usually provided by the shredder manufacturer. For radioactive/contaminated waste the unit can be adapted to operations in remote gloveboxes or hot cells. Only the shredder itself needs to be in the remote location; the shredder shafts or hydraulic hoses can be located in a clean area. The controls can be located on or near the power unit, or as far away as the control room. Shredders are can be used in underwater applications.

Shredability limits vary considerably based on cutter width, waste configuration, and how the waste happens to hit the cutter teeth (i.e., vertically or horizontally, or perpendicular or parallel to the cutter shaft). In general, the heaviest materials that can be shredded are 1/4-in. plate steel, 1 1/4-in. rebar, 1 1/4-in. steel cable, and 4-in. schedule 40 pipe. The largest shredders can accept a 50-in. container. The original length of these material has little to do with shredability. Regardless, the smallest practical product particle size is 0.5 to 1.0 in. However, this will usually require a multiple-stage unit.

When pipes and bars are held horizontally by other waste, the cutters chop the pipes and bars into short pieces the length of the cutter teeth width. However, if a pipe or bar is flipped vertically by the cutter teeth, the material can drop through when the cutters are properly aligned. While being processed, single drums can become aligned parallel with the cutter shafts and may not be readily catchable by the cutters. Unless the drum is realigned, the drum will lay in the valley until the cutters wear through the side wall (estimated to be 3 to 10 min). Wood lying flat on the cutters does not shred until something upsets the wood or until something heavy presses down on it. This may be a problem when handling waste stored in boxes. In these latter two cases the material, drums, and wood can be "force fed" through the shredder by utilizing a hydraulic tamper. Most manufacturers can provide this as an optional accessory.

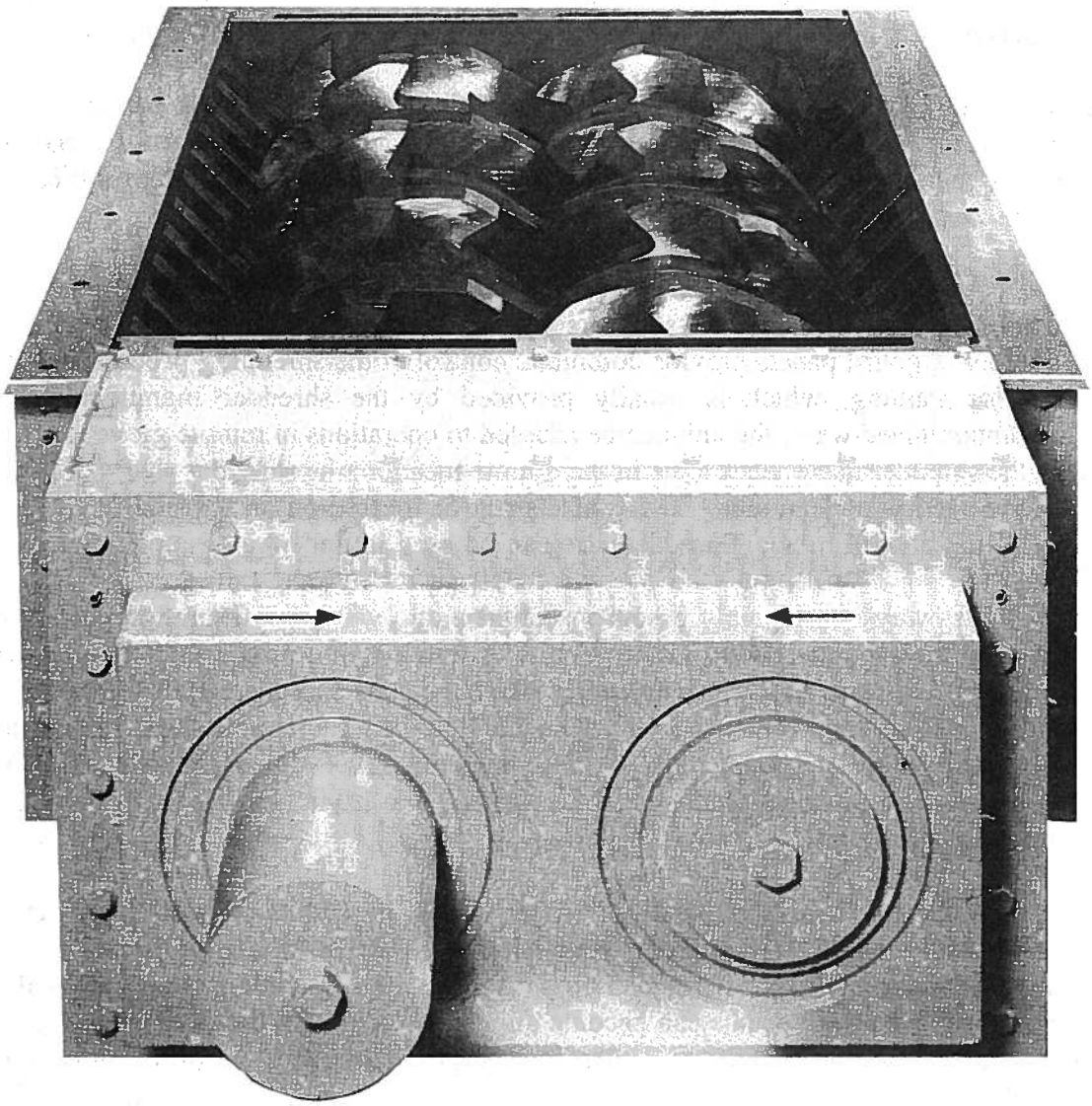

**Figure 8.2. Typical shredder**

is caught and cannot be processed. Decontamination after shredding is impractical if not impossible due to entrapped contamination. When processing potentially explosive barrels, a nitrogen blanketing system can be incorporated into the shredder's design. For example, a report entitled *Low-Speed Shredder and Waste Shredability Tests,* prepared by Idaho National Engineering Laboratory for the DOE, provides an overview of the manner in which the shredders provided by major suppliers performed on applicable waste feedstocks most likely to be generated at a decommissioning site.

### 8.2.4 Smelting and Melt Refining

Smelting and melt refining is accomplished using an electric furnace. Although electric furnaces have been used worldwide to refine deposits consisting of a variety of minerals, they are not amenable to all combinations of methods and contamination. For example, not all combinations of radioactive metals have been thoroughly investigated. Nevertheless, current literature indicates that electric furnaces are an effective, efficient waste treatment alterative and that questions about their ultimate feasibility center on cost.

From an engineering viewpoint, metal (feedstock) preparation, feeding, and pouring the molten products while containing contamination represent the most complex considerations regarding the implementation of an electric furnace. Size is generally not a consideration since small, commercially available electric furnaces are oversized, even for larger decommissioning projects. A 2–4 ton/hr electric furnace (nominally 14,000–28,000 ton/yr) for ferrous iron is generally less than 20 ft OD by 30 ft high. Furthermore, the cost for the furnace represents only 10–33% of the entire cost of a new facility designed to treat radioactive wastes.

The primary processing variable in an electric furnace concerns controlling the quality of the slag produced. Control is established by using appropriate admixtures and temperatures, both of which are selected to maintain a homogenous mixture in the molten bath. In this manner, the desired reactions occur and the desired strata appear. Figure 8.3 shows a cross-sectional view of a typical electric furnace with three metal strata: molten metal, slag, and charge. In metal refining, the molten metal statum may consist of several metals. Also, the furnace may have multiside taps and/or a bottom tap (Figure 8.4).

Refractory life is dependent upon the type of detrimental chemical reactions that occur and the frequency and manner in which temperature variations occur. For example, controlled water flow through the membrane furnace walls creates a frozen slag liner that reduces the detrimental chemical reaction rates. This extends refractory life at a slight expense of additional energy losses.

The two types of feed mechanisms—feed chutes and screw conveyors—are used during continuous operation because each of these conveyors can easily be designed to minimize inleakage.

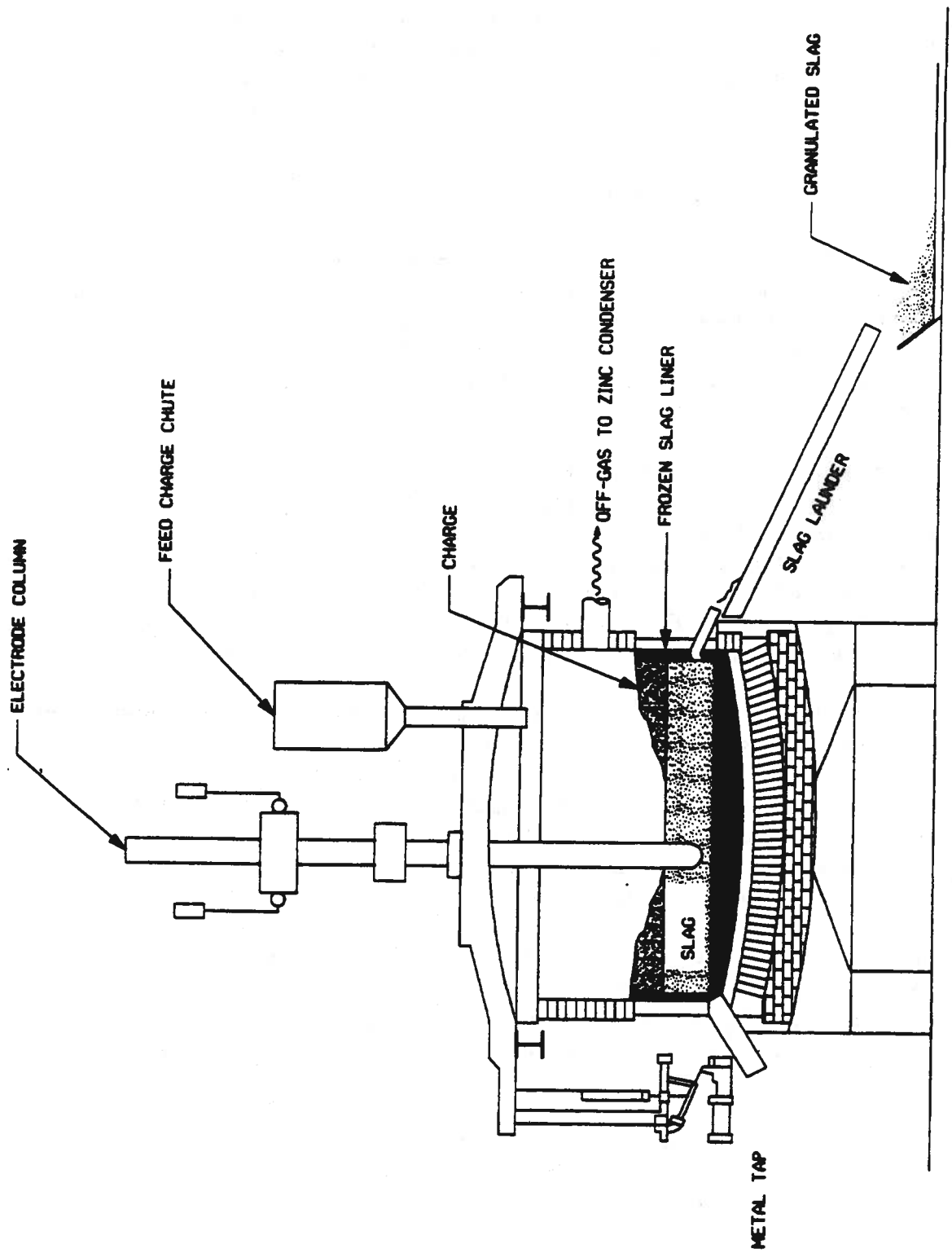


**Figure 8.3. A commercial multipurpose slag resistance furnace**

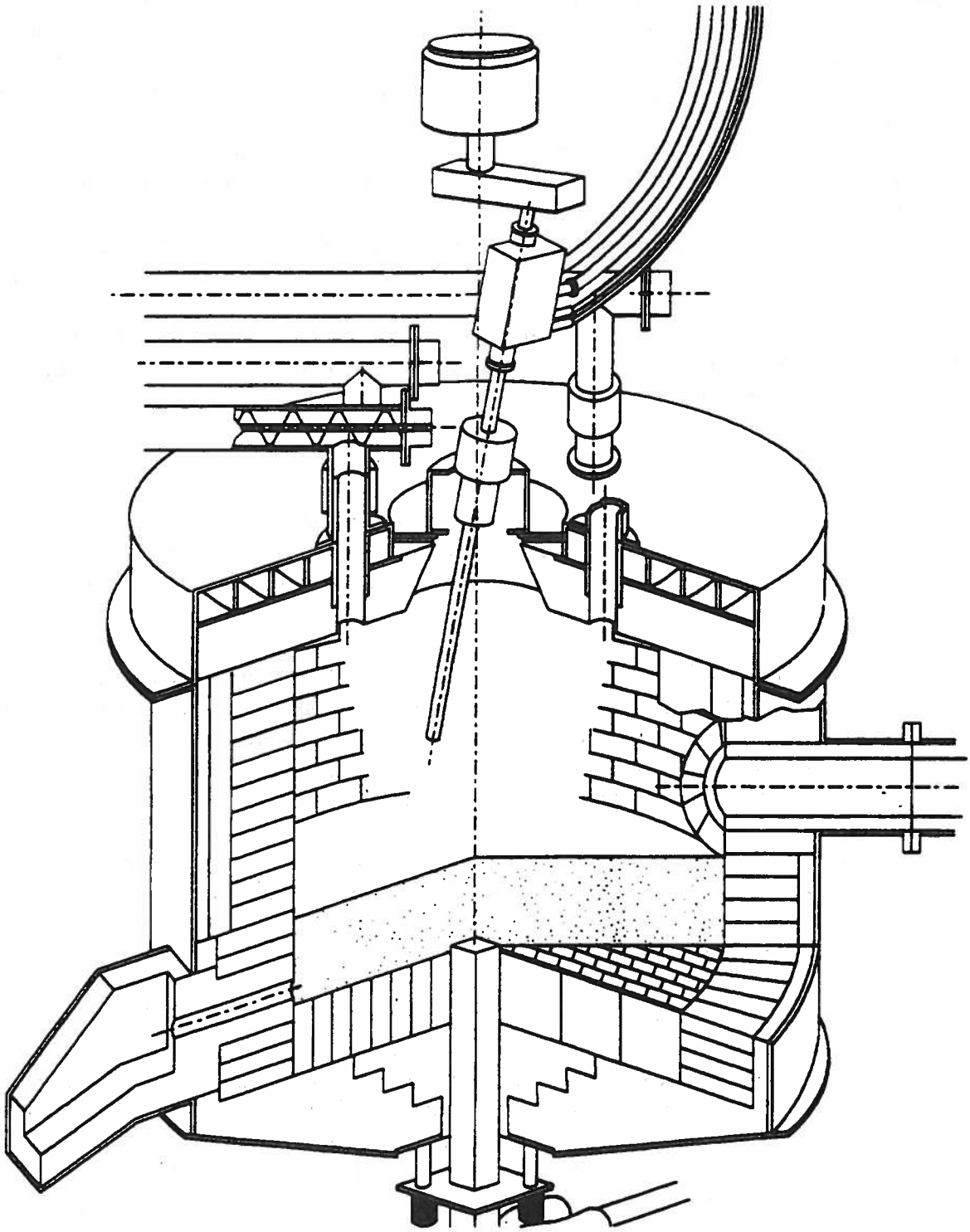

**Figure 8.4. Typical plasma furnace**

The best place to attach the admixture inlets, electrodes, and torches is in the roof. This placement ensures that maintenance activities are easily performed and minimizes line losses between the electrodes and the transformers. However, this limits the area that may be used for the metal feedchute, which in turn limits the charge size. An alternative is to implement batch operations using a crane and bucket. Figure 8.5 is a schematic that shows how one steel producer recycles electric arc furnace (EAF) dust. In this operation, the dust is made into pellets that are used in the furnace as fuel. For this operation, three bucket loads are required to achieve one furnace load. This mode of operation reduces the average throughput rate, increases maintenance costs, and potentially increases the emission rate. However, batch operations also vastly decrease the cost associated with feedstock preparation. Currently, there are more than 25 mini steel mills operating in the United States in which the primary feedstock is recyclable metal (primarily automobiles). The majority of these producers use this mode of operation. The ferrous iron produced is not a high-grade product because of the metal contaminants that remain after processing. The technology is available, but the economics associated with further metal refining is not currently attractive.

## 8.3 Sludge Processing

This section describes the technology used to process the sludge that may be part of the facility inventory or that is generated during the decontamination process. The primary components in sludge are liquids and solids (inert material). To treat the sludge, it is initially necessary to remove the liquid in the sludge.

To remove the water from the sludge, thermal treatment is the simplest method, although it is not always the most cost-effective alternative. Details of thermal treatment can be found in Sections 8.6. Thermal treatment to remove excess liquid from the sludge is normally employed when the percentage of suspended solids is high (greater than 60%) and the economics dictate that the volume reduction is more cost effective than that with straight disposal.

If the sludge volume is such that thermal treatment is feasible because of excess water present, mechanical dewatering may be considered as a pretreatment operation.

### 8.3.1 Dewatering Equipment

Dewatering is the packing or compressing of individual particles into larger clumps. The most likely dewatering devices to be used in decommissioning projects are belt filter presses, plate and frame filter presses, and centrifuges. These dewatering instruments can produce a cake solid of 20–60% solids and a solids capture of 90–95%. Belt press filtration is a continuous dewatering process consisting of three operational stages: chemical conditioning of the feed sludge, gravity drainage to a nonfluid consistency, and the compaction of the predrained sludge. A process-flow diagram of the belt filter press is provided in Figure 8.6. The sludge feed is mixed with the flocculating chemicals, usually in a small tank of the magnitude 70–100 gal to enhance separation from the liquid phase. Following the conditioning process, the mixture is distributed to a porous woven belt where the gravity phase of separation occurs. In this section, up to 60% of the liquid

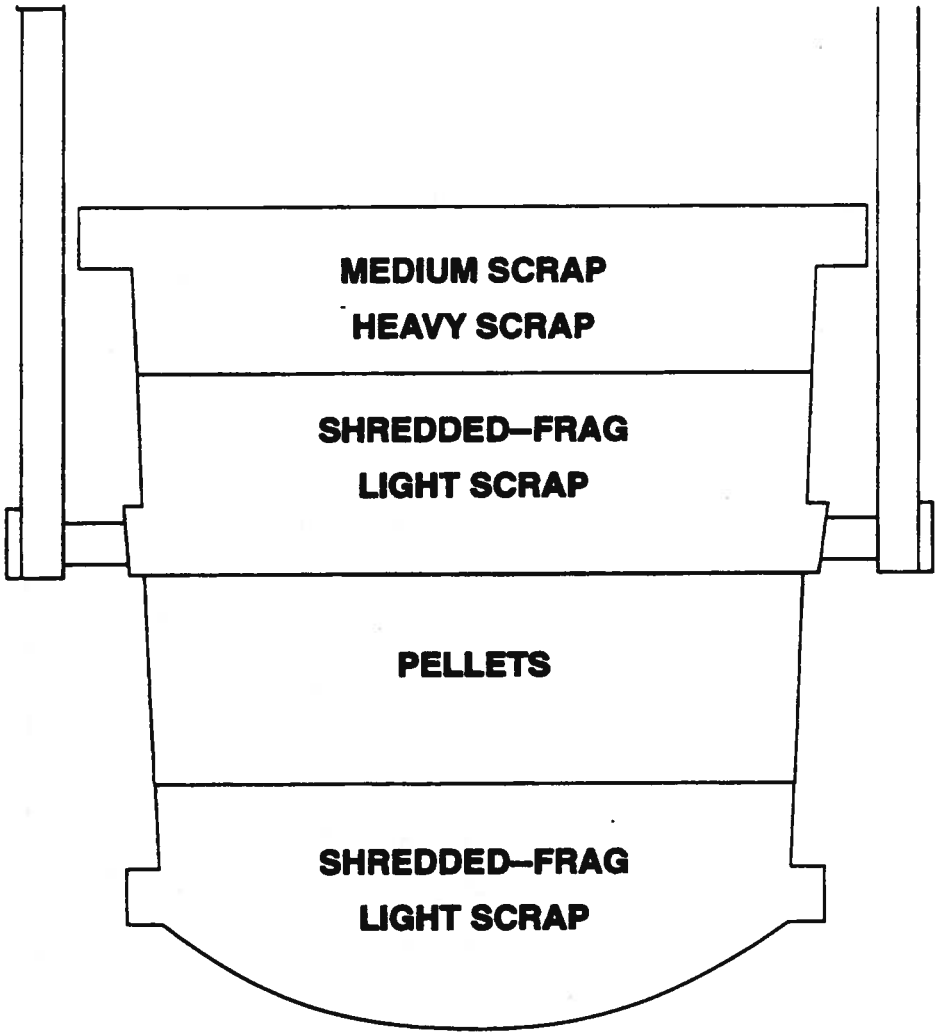


**Figure 8.5. Typical composition of furnace batch charge**

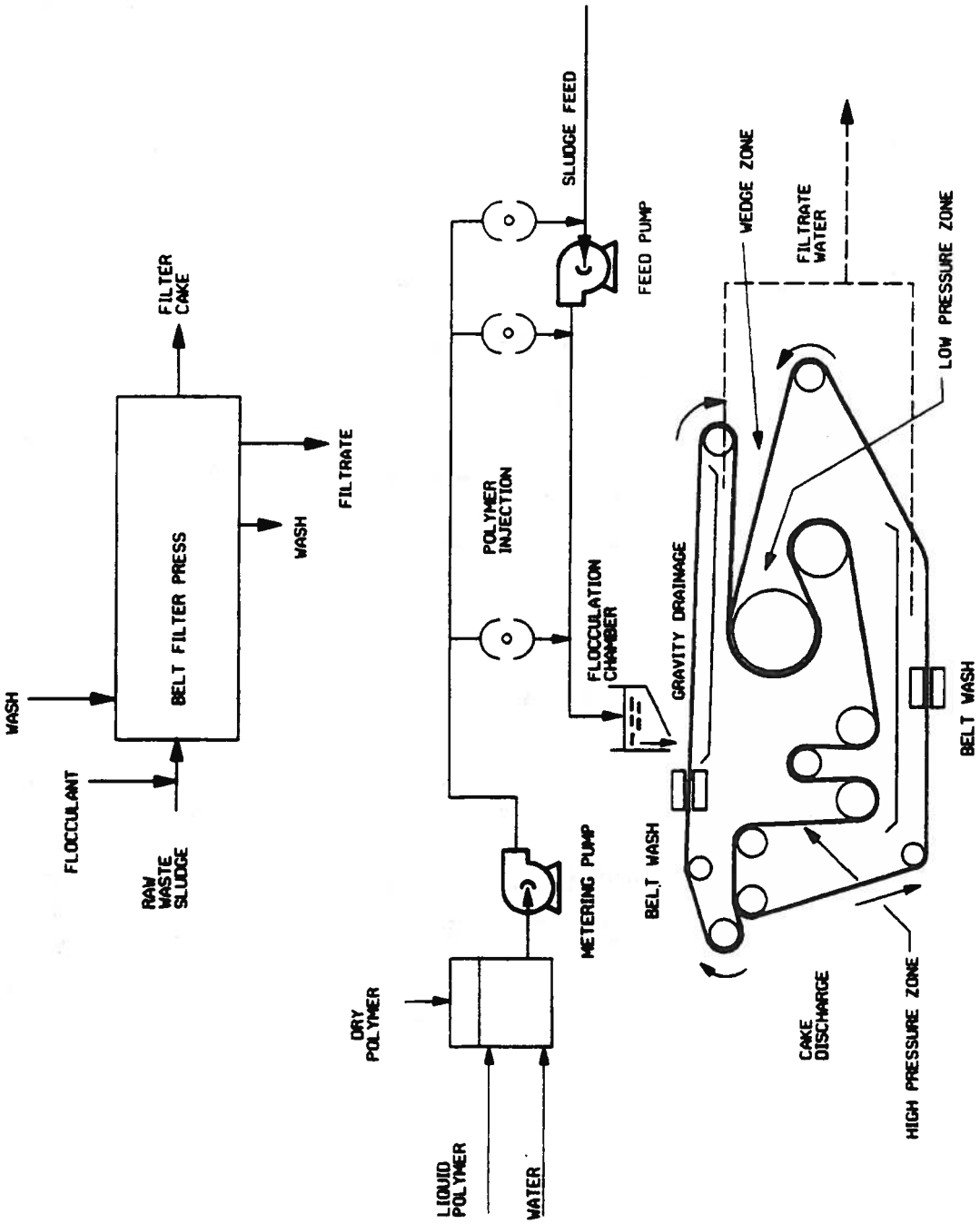


**Figure 8.6. Diagram of belt filter process**

is removed. The feed is then transported by belt to the low-pressure zone, where the sludge is squeezed using mechanical pressure. Further separation takes place in the high-pressure zone. As the roller diameter decreases, the corresponding pressure exerted on the sludge is increased. The cake generated from the process is then scraped off the belts for disposal or further cake dewatering processes. Important process variables for efficient operation include the following:

- waste composition and characteristics;
- flocculation efficiency, including type of polymer and insertion rate;
- belt material, pore size, and weave;
- feed rate and belt speed; and
- pressure exerted on the sludge.

The mechanical components of a belt filter press generally include dewatering belts, rollers and bearings, a belt-tracking and tensioning system, controls and drives, and a belt-washing system. The dewatering belts are usually constructed of monofilament polyester fibers. The belts vary in effectiveness accordingly since they can have different weave combinations, air permeabilities, and particle-retention capabilities. Compared with other dewatering processes, belt filter presses have the greatest need for optimization of the polymer dosage as a function of the incoming sludges characteristics. Underconditioning can result in inadequate drainage of the free water in the gravity zone, which can cause sludge overflow; overconditioning can cause belt binding and problems with cake release.

A recessed plate filter (a modification of the plate and frame filter) is a batch sludge dewatering device. A diagram of a recessed plate filter is shown in Figure 8.7. It consists of a series of chambers that form a cavity into which the influent is pumped for dewatering. Filter media are placed against the walls, preventing the passage of solids. The slurry influent is fed and distributed throughout the plates. The plates are then pushed and held together by a piston. Operating pressures range from 50–125 psi for low-pressure units and 150–200 psi for high-pressure units. The liquid then passes through the filter media (usually synthetic woven material), and the cake is then scraped off the plates and disposed of. Operating parameters affecting the efficiency include the following:

- waste composition and characteristics,
- types of filter media,
- media precoat and thickness (usually diatomaceous earth),
- cycle time,

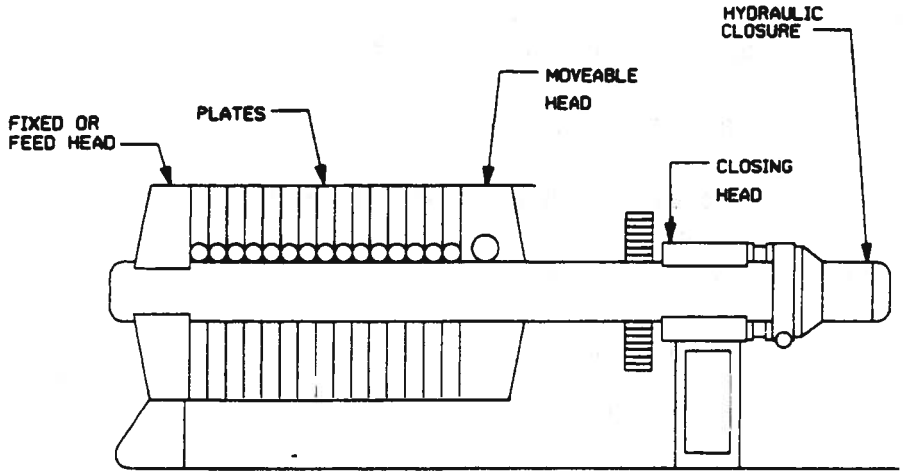


SCHEMATIC SIDE VIEW OF A RECESSED PLATE PRESSURE FILTER

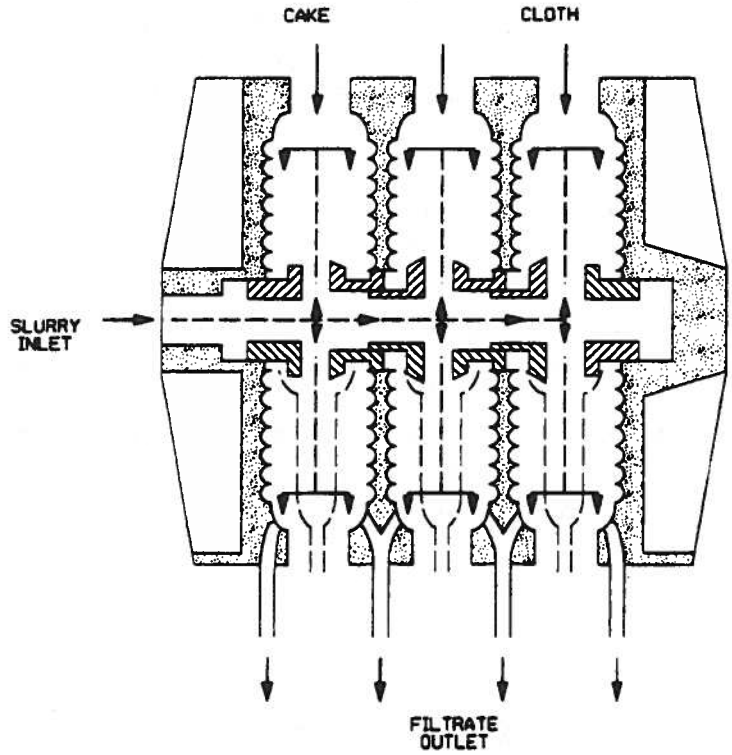


**Figure 8.7. Cross section of a fixed-volume recessed plate filter assembly**

- influent conditioning, and
- operating pressure.

Plate filters are very useful at breaking emulsions if the feed is properly conditioned.

Dewatering centrifuges involve the fast rotation of sludges in a cylindrical vessel. As the sludge is pumped into the vessel, the rotation forces press the influent against the interior walls of the vessel where density differences cause the phases to separate into two distinct layers. Centrifuges operate efficiently as long as a constant set of variables is input to the system. Deviation of these input variables can dramatically reduce the efficiency of the centrifuge.

A schematic of a centrifuge is provided in Figure 8.8. A helical screw conveyor fits inside the bowl, which is the mechanism of separation. A small clearance is provided along the outer edges of the bowl to provide for the solids-liquids separation. The conveyor rotates at a different speed than the bowl to promote a differential speed, which allows the solids to be conveyed from the zone of the stationary feed pipe, where the sludge enters, to the dewatering beach, where the sludge is discharged. The length of the conical section above the pool level may vary considerably depending on the characteristics of the sludge and the operation of the centrifuge. As a general rule, the lower the structural strength of the cake, the smaller is the desirable drying beach length. For all sludge dewatering processes, the feed should be partially thickened so that the capacity is not limited by excess water entering the process. Table 8.4 denotes the criteria for selection of sedimentation centrifuges.

### 8.3.2 Factors Affecting Dewatering

The selection of a mechanical dewatering process is generally site-specific and is dependent on the following characteristics of the suspended solids:

- particle density,
- particle size distribution,
- surface charge,
- degree of hydration, and
- compressibility.

Figure 8.9 shows the various dewatering accessories that may employed to promote optimal efficiency in most dewatering processes. Filter aid, precoat, coagulating chemicals, and flocculating chemicals are the usual inputs to the sludge feedstock for dewatering maximization.

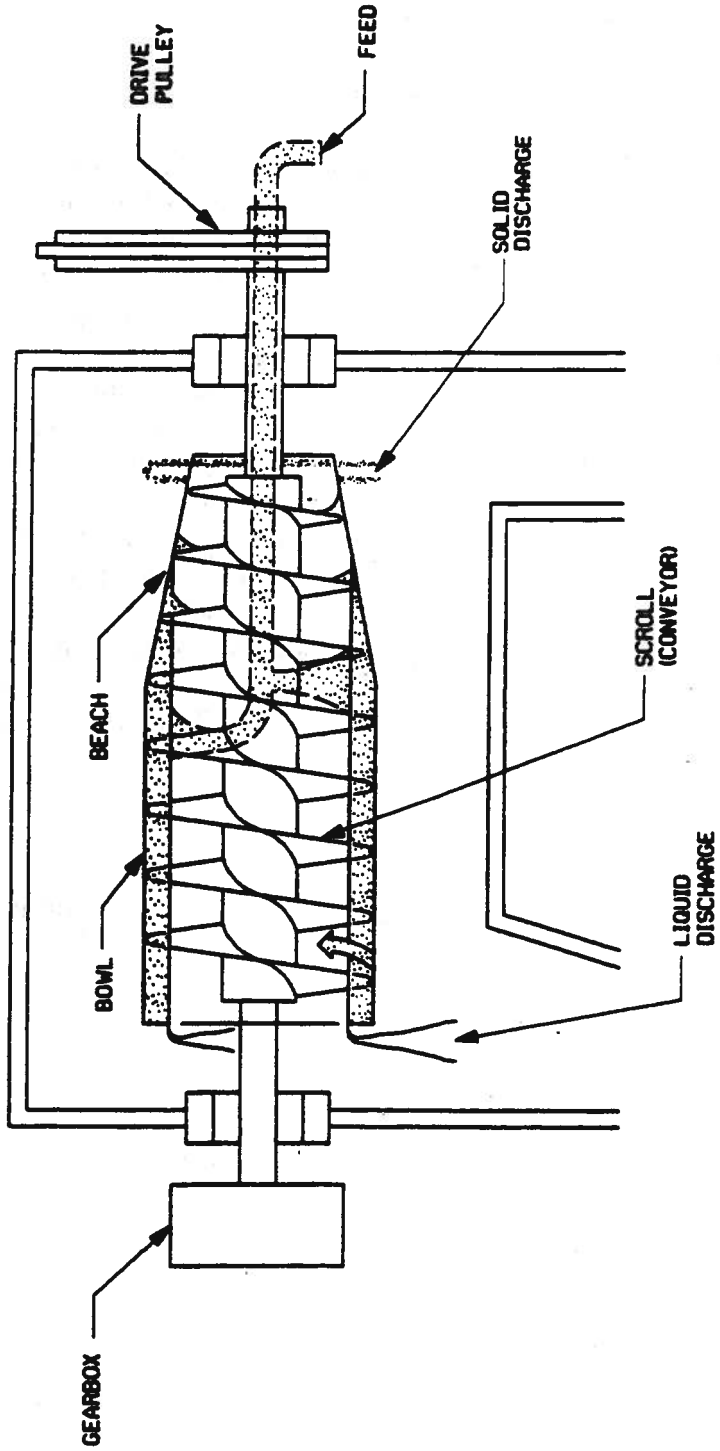


Figure 8.8. Solid bowl centrifuge

**Table 8.4.**
**Selection Criteria for Sedimentation Centrifuges**

| Parameter | Tubular Bowl | Skimmer Pipe | Disc | Scroll |
|---|---|---|---|---|
| Solids concentration vol./vol. | <1% | Up to about 40% | Up to about 20% | Any as long as it remains pumpable |
| Particle size range processable for density difference under 1 g/cc and liquor viscosity 1 cP | 1/2–50 micron | 10 µm to 6 mm | 1–400 µm | 5 µm to 6mm |
| Settling time of 1 liter under 1-g acceleration | Few hours to infinity | 1/2 hr to days | Several hours | 1/2–1 hr |
| Settling time of 50 cc at 2,000 g | 5–15 min | 1–5 min | 5–10 min | 1–5 min |
| Approximate maximum throughput for largest machine | 5,000 l/hr | 15,000 l/hr | 100,000 l/hr | 70,000 l/hr |
| Approximate nominal throughput for largest machine | 1,250 l/hr | 12,000 l/hr | 40,000 l/hr | 30,000 l/hr |
| Nature of bottle-spun solids | Can be any consistency | Must be fluid to pasty | Must not be too cohesive | Preferably compact and cohesive |
| Batch or continuous | Batch | Semi | Semi or continuous | Continuous |
| Floc applicable | Possibly, but not usual | Yes | No | Yes |
| g levels used | Up to 18,000. 60,000 Laboratory model | Up to 1600 | 4,500–12,000 | 500–4,000 |
| Maximum sigma value $\times 10^7$ cm$^2$ | 5 | 4 | 10 | 14 |

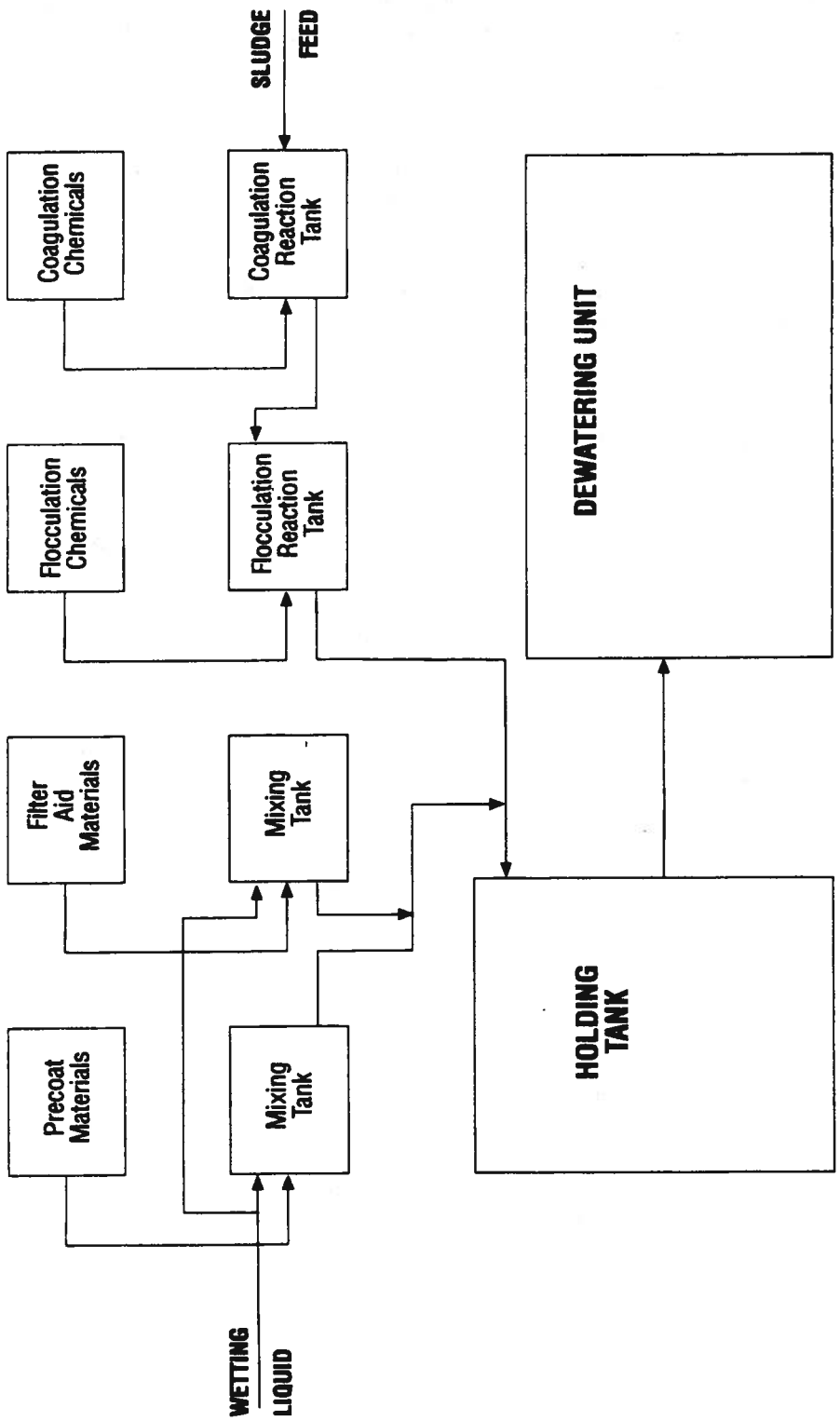


**Figure 8.9. Dewatering accessories for optimum efficiency**

Dewatering accessories (i.e., conditioners, filter aids, filter media) are used to improve the quality of a sludge. Chemical conditioners prepare the sludge for efficient dewatering.

## 8.4 Liquid Processing

Liquids encountered in much of the nuclear industry are usually dilute solutions with little or no suspended materials. However, at the start of a decommissioning project a variety of bulk liquids could remain. Ideally, the safe shutdown phase includes the removal of such bulk liquids, but in many cases this step may have to be done as part of the decommissioning project. In addition, the by products of decontamination processes may have unusual chemical and physical characteristics that require specialized waste treatment.

This section is devoted to techniques for removing contaminants from water so that the water can be reused or recycled to the environment. As a spin-off, the contaminants are concentrated and can be treated by another technique to meet the desired acceptance criteria. Figure 8.10 is a diagram showing the applicability of various techniques for removing contaminants from water based on their particle size. Not all the techniques pictured here are addressed. Those that are described are the ones more applicable to decommissioning. Emphasis in this section is placed on the cleanup of water containing less than 1000 ppm total contaminants, less than 25 ppm organics, and with particle sizes less than 10 microns. For higher concentrations and larger particle sizes, filtration and sedimentation (clarification) would be the techniques of choice. Figure 8.11 gives the approximate range in particle sizes of common materials. Contaminants with particle sizes less than 10 microns include silt, clay, colloids, and dissolved materials.

### 8.4.1 Clarifiers

In many decommissioning projects, the water used in washing, cooling, or other decontamination functions will contain contaminated particulate matter that should be removed prior to testing for release. Holding or settling tanks are used to allow the particulate material to settle out (termed *clarification*) before the water is tested, treated (if necessary), and released.

This technique was used extensively in the decommissioning of the Princeton-Pennsylvania Accelerator. Water containing radioactive concrete swarf was collected in a holding tank. When the tank was full, the solids were allowed to settle out overnight. The clear supernatant water was sampled and, when found to be clean, was pumped off from the top surface. The water remaining in the sludge portion (approximately 6 in. deep in a 3-ft-deep tank) was used as the water in a cement solidification process.

### 8.4.2 Filtration

Filtration is done by passing the liquid through a medium designed to obstruct the flow of the contaminants, resulting in a purified liquid and a concentration of contaminant in or on the medium. Eventually the buildup of debris on the media reduces its effectiveness, and it has to be replaced or cleaned. Cleaning is commonly done by reversing the flow of water through the

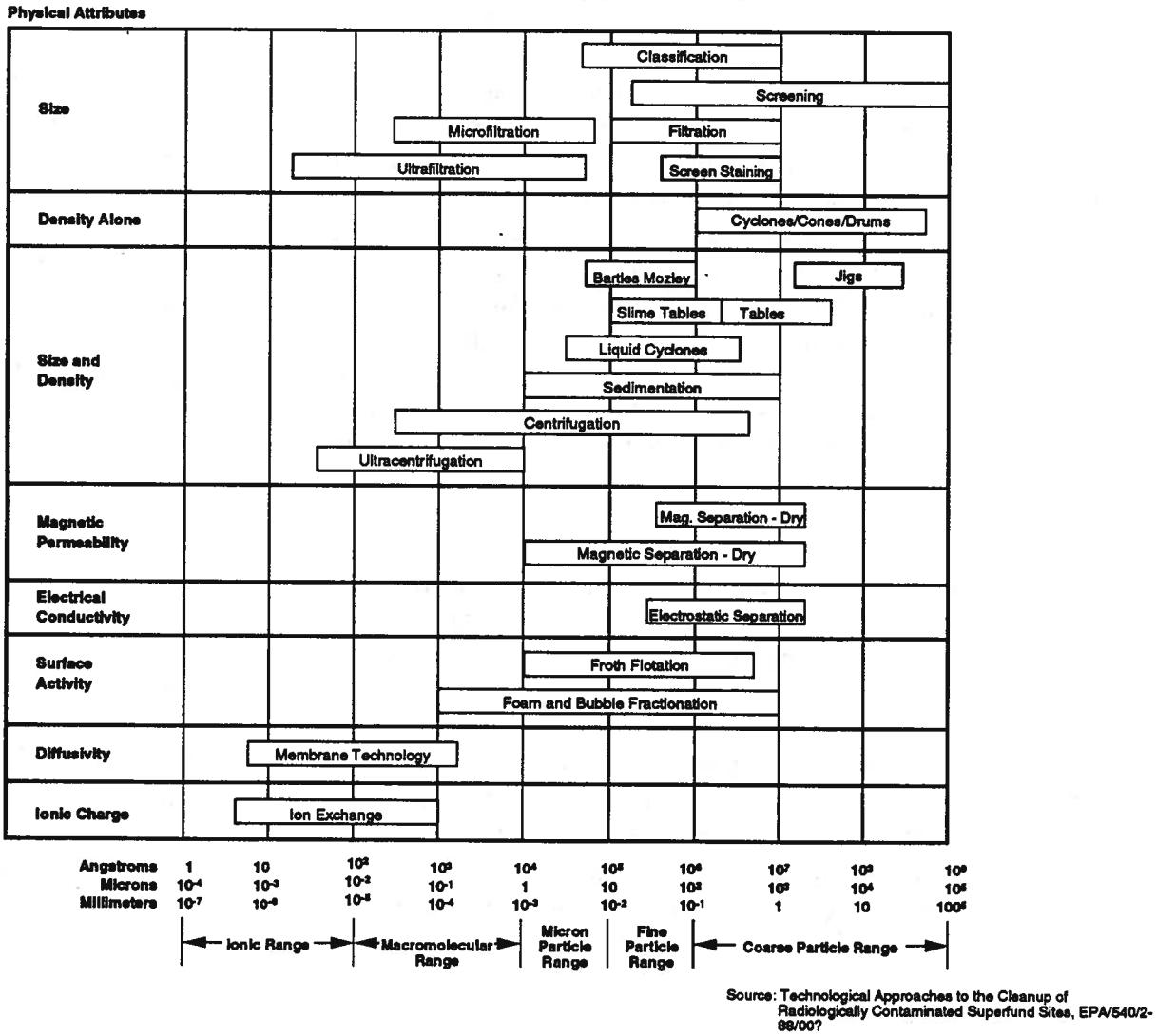


Source: Technological Approaches to the Cleanup of Radiologically Contaminated Superfund Sites, EPA/540/2-88/007

**Figure 8.10. Physical separation technology and particle size**

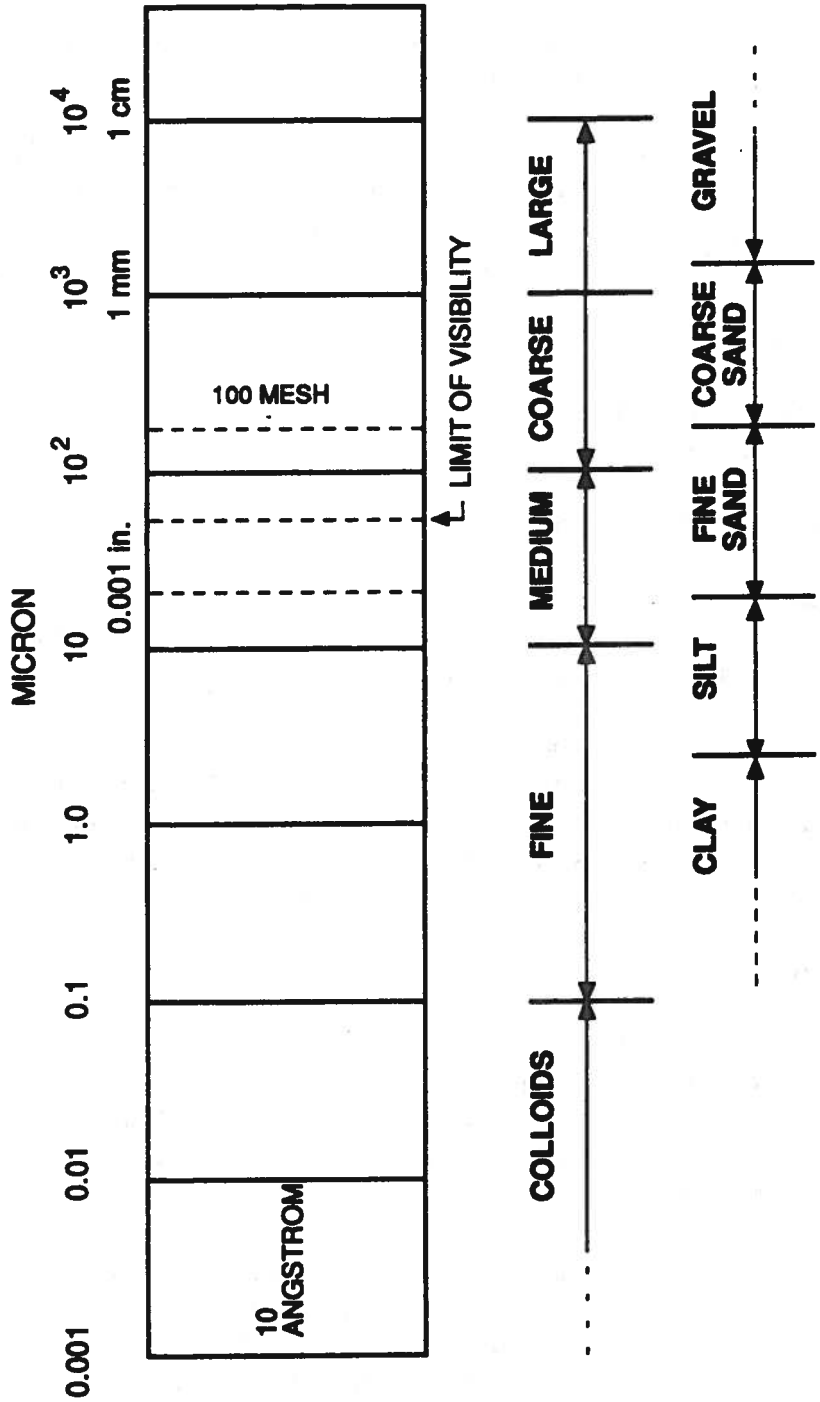


Figure 8.11. Particle size of common materials

medium and diverting it to a collection tank (backwashing). This serves to remove much of the contaminant from the filter and isolate it for further treatment.

Filtration can be divided into two categories: depth filtration, in which the suspended matter being removed is deposited within the pores of the filter media, and surface filtration, in which filtration takes place as a cake. Granular media filtration (GMF) is an example of the former, and a cartridge-type and precoat filters are examples of the latter.

To properly understand a filter system, it is important to know the influent particle-size distribution. Frequently, at least two filters are necessary to prevent the constant need for backwashing and the consequent down time. When suspended solids exceed 1,000 ppm, two filters should be used. The first one is normally sized to remove the average particle and the second sized to remove the smallest particles. Filters are also used before and after other treatment units to protect those systems.

To ensure easy transport and minimize construction costs, this equipment is generally purchased preassembled on a skid or mounted on a standard flatbed trailer.

#### 8.4.2.1 Strainer and Filter Bag Baskets

When smaller-sized filter media are used, it is often necessary to install a prefilter to prevent clogging by larger particles. Strainers and filter bag baskets are often used for this purpose. They differ only in the bag design. The strainer is designed with a flat bottom, and the filter bag basket is designed with a perforated bottom to accommodate the filter bags. To increase the strainer and filter basket life and produce a better quality effluent, dual arrangements can be installed. Dual arrangements consist of a filter basket placed inside another filter basket or strainer. The disadvantage of filter bag baskets is that they have to be replaced, and in doing so personnel may be exposed to process material. Strainers should be selected so that the pressure drop through the media does not exceed a specified limit, usually 2 psi.

#### 8.4.2.2 Depth Filters

GMF systems make use of filters made from either one type of material or many. The selection of filter type depends on site-specific particle-size consideration. Secondary considerations are whether the fluid flow is up or down and whether the bed is fixed or fluid. These secondary considerations are not relevant in the determination of whether or not a GMF system is selected, however, since they only represent significant operational variations.

A GMF system is similar to ion exchange systems (Section 8.4.4) and carbon absorption systems (Section 8.4.5). The only major differences between the three are in the media used and the methods used for regenerating these media. (These variations are described in later sections.) GMF is usually applied to water containing less than 100 ppm of suspended matter with an average particle size less than 100 microns. In some cases, depth filtration is used before ion exchange.

On an appropriately designed granular media filter, the media grain size should decrease uniformly in the direction of flow. This configuration provides a sequence of increasingly smaller pores that remove increasingly smaller particles and distribute the captured solids throughout the entire depth of the bed. This design provides slow headloss buildup, the ability to accept higher solids loadings, consistent filtrate quality, and longer run times. Anthracite, sand, and garnet are the most widely used granular media. Figure 8.12 shows the major components of a filtration system for a nuclear facility. In some cases, retention plates can be inserted between filtration media. In Figure 8.12, the normal filtration flow is downward and the backwash flow is upward.

Eventually, filters become plugged. To restore them to their original condition, the collected particles must be removed from the filter media. Detachment is accomplished by backwashing. Sometimes air is utilized during the initial backwash cycle. The high velocities provided by an air purge prior to backwash provide an effective means for dislodging deposits that have developed greater cohesiveness over the filtration cycle. Chemical additives (polyelectrolytes) can be added to the liquid to reduce the surface tension at the surface of the deposit to improve flow and provide better contact. However, using too much can be counterproductive in that tough, large-sized flocs can be formed rapidly. In this instance, the filter will quickly become blinded and have to be backwashed.

#### 8.4.2.3 Cartridge Filters

Cartridge filters are composed of one or more replaceable or renewable cartridges consisting of the active filter media. These filters are usually placed in the line that carries the liquid waste.

Cartridge filters are available in various pore sizes and media. Polyester, polypropylene, and nylon are common cartridge filter materials.

#### 8.4.2.4 Precoat Filters

The performance of several kinds of filters can be improved by using a precoat. The precoat is applied by mixing the desired material with water and passing it through the filter. The precoat material, typically diatomaceous earth, forms a very porous layer on the filter surface that both enhances the collection of particles and provides abundant flow channels. The additional flow channels allow the filter to operate for longer times between backwashes. Backwashing is accomplished by reversing the flow of water by pumping or through the sudden release of pressurized gas. Additional filter media such as ion exchange resins or zeolites can be added following the precoat to tailor the filter operation to meet a specific need.

Figure 8.13 shows a tubular-type precoat filter and the associated accessory equipment. The application of the precoat is done by pumping from the body feed tank through the filter and recycling the effluent through the precoat tank. Once the precoat has been applied, the recycle flow is replaced by the flow of the liquid to be filtered.

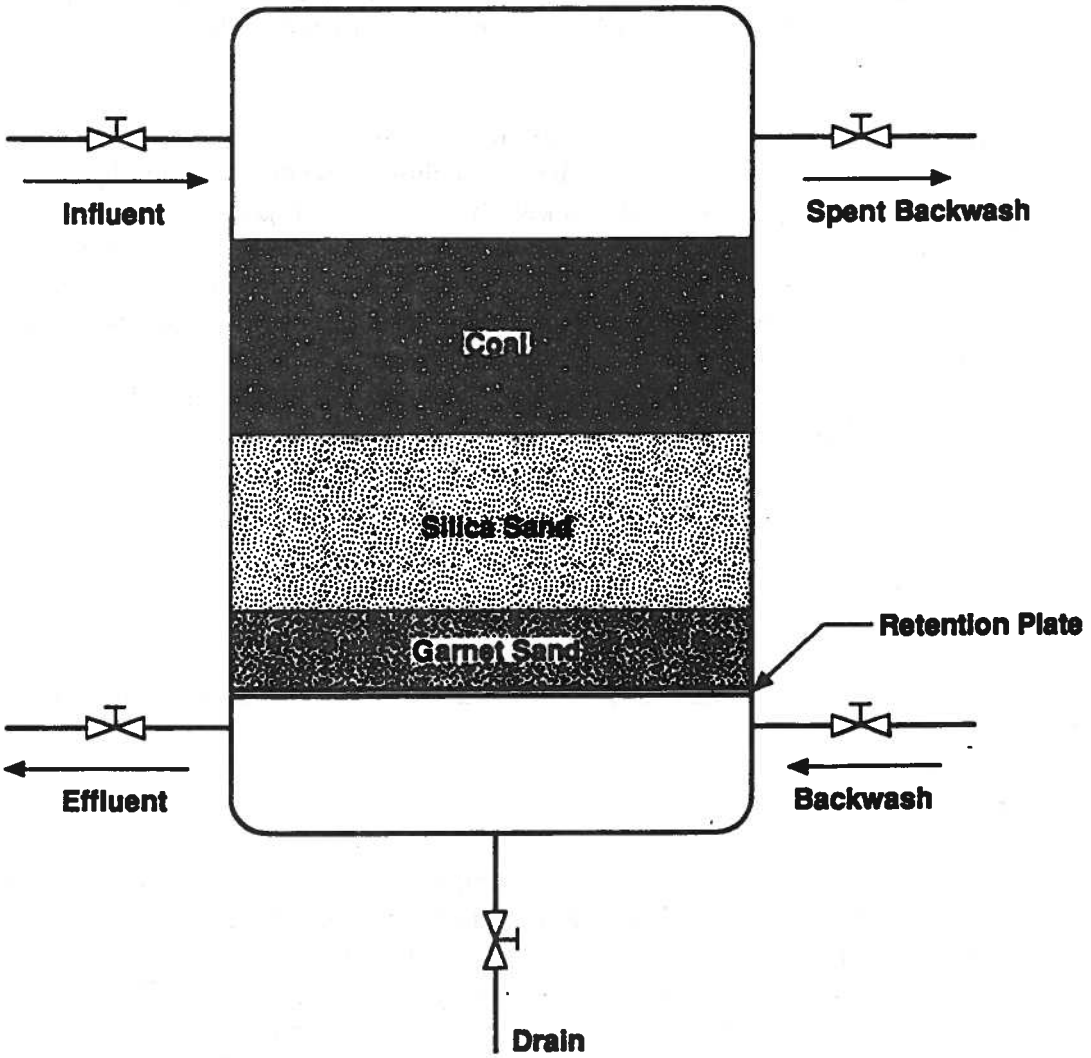


**Figure 8.12. Typical filtration vessel elements**

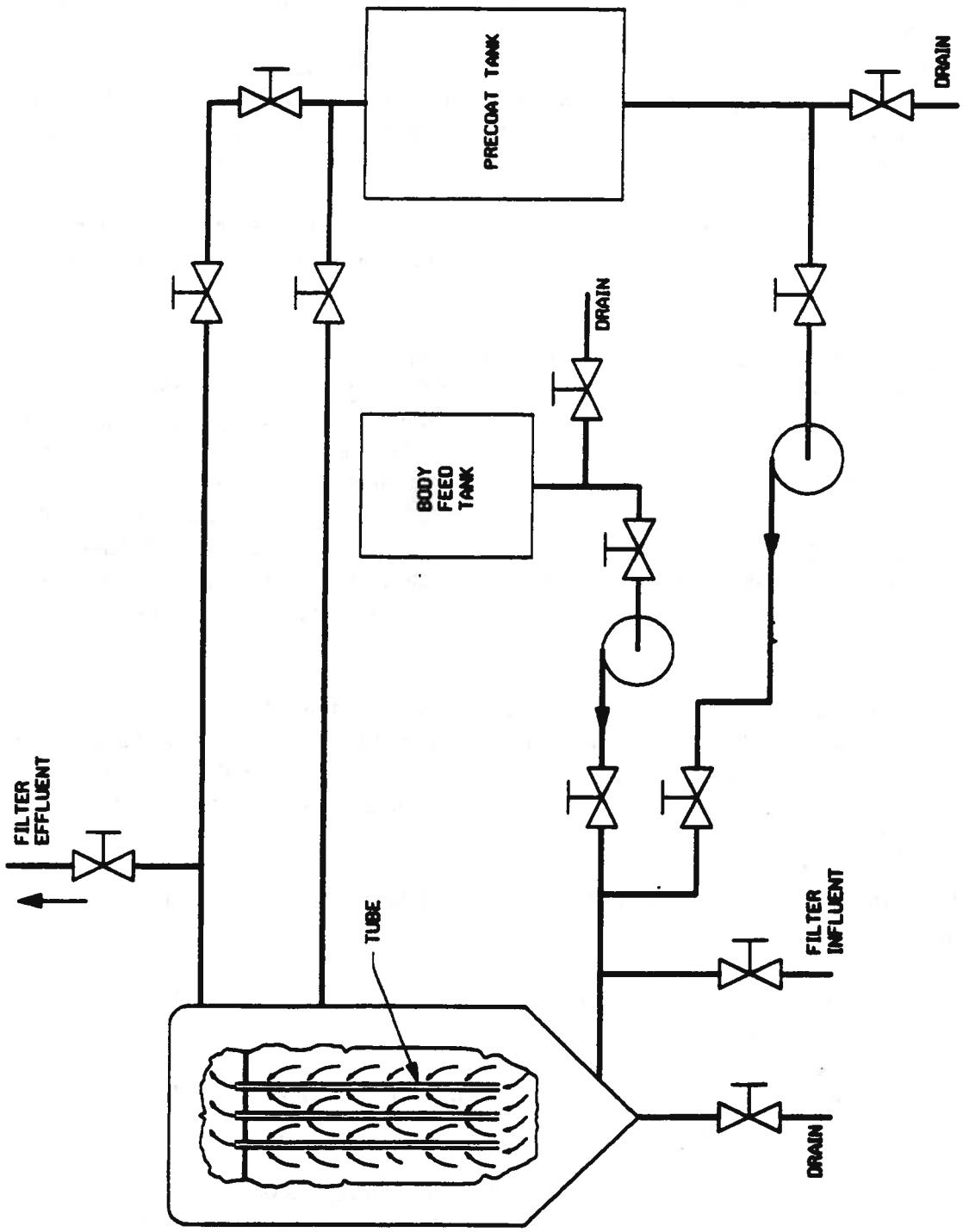


Figure 8.13. Tubular-type precoat filter system

### 8.4.3 Membrane Separation Processes

There are a myriad of membrane separation processes that are highly efficient (i.e., capable of processing up to 200 gpm—although stationary plants are possible, processing requirements at most decommissioning sites should be less than 200 gpm) and that can be erected as a stationary or mobile configuration for a relatively low capital cost. Furthermore, these processes can separate many combinations of gases, vapors, liquids, and suspended solids less than 10 microns in diameter from the carrier media. Ideally, more than 80% of the undesirable components should be less than 1 micron and represent less than 10% of the total weight of the feedstock.

Larger particles and greater concentrations may be possible; however, accelerated membrane deterioration may occur. Less efficient filter systems should be used upstream to reduce particle size and higher concentrations.

Some membrane separation (microfiltration and ultrafiltration) processes were originally designed to filter suspended solids in the 0.01–1 micron range for liquids. As a result of major improvements, primarily in the materials used and the manner in which the membranes are manufactured, the current membrane separation range has been extended to a particle size of 0.0001 microns (1 angstrom). Figure 8.10 does not show the increase in the separation range for membrane separation processes. In the particle size range between 0.0001 and 1 micron, it is difficult to distinguish between an insoluble and soluble particle, either organic or inorganic solid, liquid, or gas. Since membrane technologies are also capable of separating liquids from liquids, gases from liquids, and gases from gases, they must be viewed as alternative technologies for these separation classifications.

Today, there are six recognized membrane separation classifications in the industry. These classifications and their normal operational ranges are shown in Figure 8.14. This classification scheme does not consider the permutations resulting from the use of external fields within each classification (e.g., electrical, ultrasonic, ultraviolet, and magnetic). The definitions of these six classifications depicted in Figure 8.15 are as follows:

- Microfiltration—the separation of suspended solids in the range 0.1 to 10 microns.

- Ultrafiltration—the separation of materials (suspended and soluble) in the range 0.001 to 0.1 microns.

- Hyperfiltration (reverse osmosis)—the separation of materials primarily in the range 0.0001 to 0.001 microns.

- Pervaporation—the separation of materials in the range 0.0001 to 0.001 microns (same as reverse osmosis). The feed must be a mixture of liquids

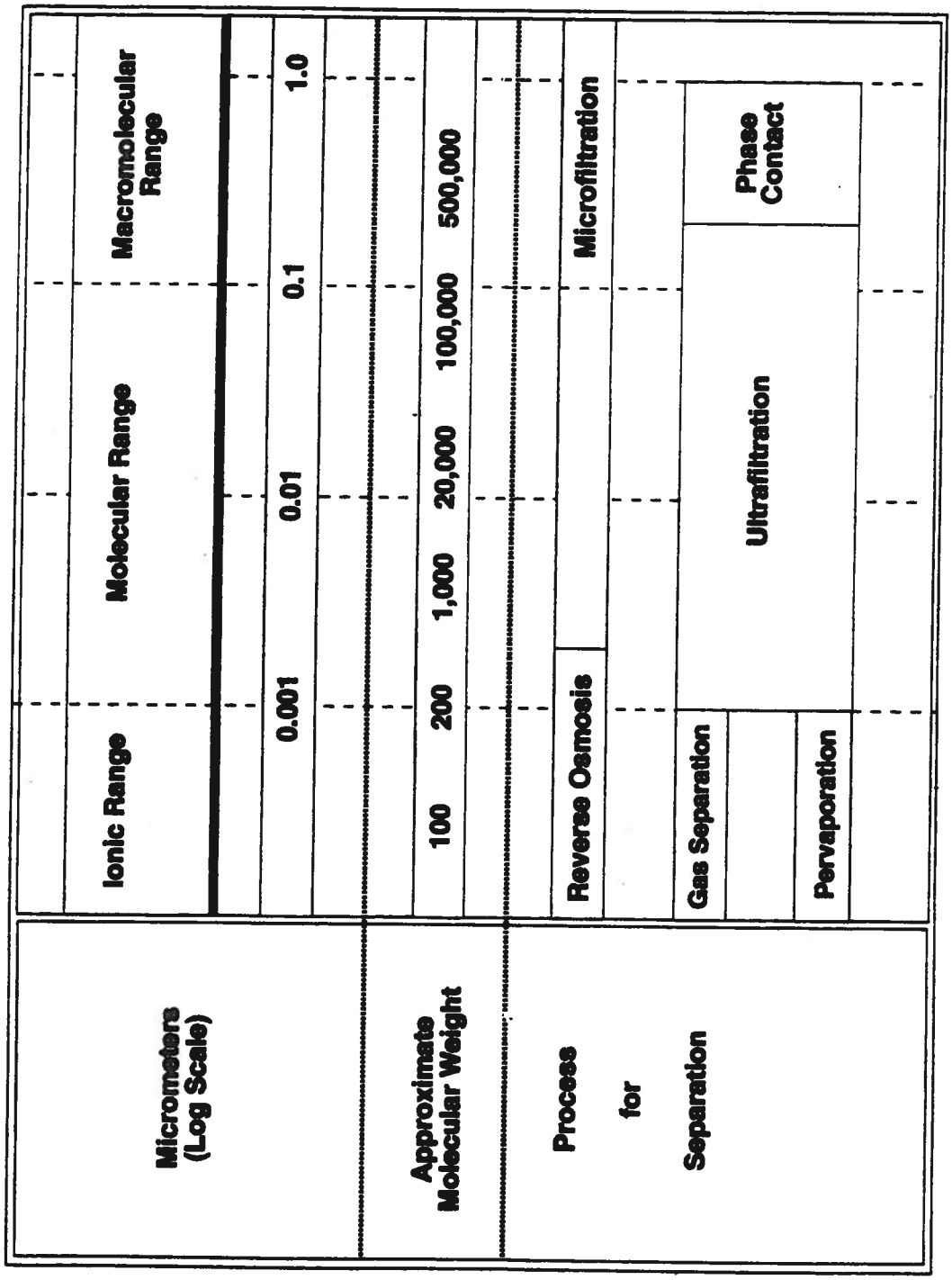


Figure 8.14. Membrane separation ranges

| CROSSFLOW SEPARATIONS PROCESS | MEMBRANE PORE SIZE | FLUID COMPONENTS RETAINED | TRANSMEMBRANE PRESSURE (Typical) | SAMPLE APPLICATIONS |
|---|---|---|---|---|
| Reverse Osmosis (Hyperfiltration) 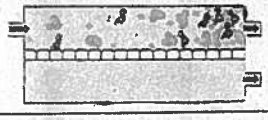 | 5Å - 20Å | Ions and most organics over 100 molecular weight (MW) | 200 psig (1380 kPa)-1000 psig (6890 kPa) | Brackish and seawater desalting; pre and post-treatment to Ion Exchange; metal ion recovery; sugar concentration; boiler feed purification and blowdown reclamation; dye purification; BOD and COD reduction in waste streams. |
| Ultrafiltration 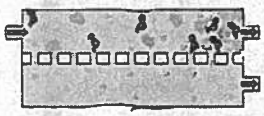 | 10Å - 0.1μm | Most organics over 1000 MW, including pyrogens, viruses, bacteria, colloids | 10 psig (69 kPa)-200 psig (1380 kPa) | Pre and posttreatment to Ion Exchange; fractionation and concentration of proteins, blood, foodstuffs, vegetable extracts; purification and clarification of fermentation broths; concentration and recovery of industrial organics and dilute suspended oils. |
| Microfiltration 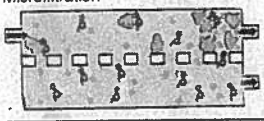 | 0.1μm - 2μm | Very small suspended particles, some emulsions, most bacteria | 1 psig (7 kPa)-25 psig (172 kPa) | High volume removal of bacteria and small suspended solids; eliminate frequent filter changeouts, extend life of point-of-use sub-micron filters in ultrapure water applications; beverage clarification. |
| Gas Permeation | 2Å - 50Å | Gases with relatively low permeability through the membrane polymer, particles in gas, vapors in gas | Vacuum to 2000 psig (13,800 kPa) | Separate and/or purify mixed gas streams, "sweeten" sour gas; $CO_2$ recovery and enrichment in Enhanced Oil Recovery; generate $O_2$ enriched and for medical and combustion uses; dry gases. |

**Figure 8.15. Pore sizes for membrane separation processes**

and/or vapors. The separation is enhanced by a phase change in one or more of the components that allows these components to diffuse across the membrane.

- Gas separation—the separation of pure gas mixtures (vapors, liquids, or solids are not present).

- Phase contact—the separation of immiscible fluids (gas-liquid or liquid-liquid).

Figure 8.14 shows that relative to particle size microfiltration, ultrafiltration and hyperfiltration reflect a continuous separation spectrum between 0.0001 and 1 micron. Furthermore, this separation spectrum represents a continuation of the separation spectrum, greater than 1 micron, described in the multimedia filtration section. Figure 8.15 depicts the same type of relationship between the process classifications and membrane pore size. The fact that phase contact, gas separation, and pervaporation overlap this particle-size separation merely confirms the observation that there are other parameters to consider prior to final selection of a membrane separation process.

A more extensive review of the current status of membrane separation processes can be found in MacNeil (1988), Muralidhara (1989), Lepore and Albeit (1991), and Fleming (1992).

### 8.4.4 Ion Exchange

The principle by which ion exchange functions is by exchanging undesirable ions in a waste stream with replacement ions in a solid material. The solid material, referred to as the resin, is usually synthetic. The ion exchange involves no permanent alteration in the structures of the resins. Resins are usually tailored to have selective affinities for particular kinds of ions. Resins consist of an insoluble skeleton-like structure that provides many ion transfer sites. They are either acid-cationic, for removing positively charged ions, or basic-anionic for removing negatively charged ions. The user generally determines the ion-exchange resins based on the nature of exchangeable ions. Resins used in radioactive liquid waste applications are usually either in hydrogen ($H^+$) or hydroxyl ($OH^-$) form. Table 8.5 lists the characteristics of representative strong- and weak-acid and strong- and weak-base types as determined by the active functional groups. After a period of time the resins become exhausted and must be regenerated. Regeneration of the resins is accomplished by putting them in contact with a small amount of solution (known as a regenerant) with a high content of the desired exchange ion. Other forms such as lithium, potassium, ammonium, and borate are also used.

Powdered ion-exchange resins are sometimes used for the removal of colloidal silica, iron, copper, and nickel. Use of this type of resin involves coating the outside surfaces of filter cartridge elements with thin layers of resin. In these systems, the resin functions both as a filter

**Table 8.5**
**Characteristics of Typical Ion Exchange Resins**

| Resin Type | Functional Group | Typical Regenerant | Regeneration Level (%) | Theoretical Capacity (meg/mL wet resin) | Ionic Form | pH Range | Max. Oper. Temp. (°F) |
|---|---|---|---|---|---|---|---|
| Strong acid | Sulfonic | 4% $H_2SO_4$ | 95 | 1.5-2.0 | $H^+$ | 1-14 | 250 |
| Strong base Type 1 | Quaternary ammonium Type 1 | 4% HaOH | 80 | 0.5-1.0 | $OH^-$ | 1-14 | 140 |
| Strong base Type 2 | Quaternary ammonium Type 2 | 4% HaOH | 80 | 0.5-1.0 | $OH^-$ | 1-14 | 100 |
| Weak base | Primary, secondary, and/or tertiary amine | 4% $NH_4OH$ | 95 | 1.5-2.5 | $OH^-$ | 1-7 | 200 |

Source: Radioactive Waste Technology

and an ion exchanger. Exhausted powdered resins are not regenerated; therefore, the time and cost associated with regeneration are eliminated. However, the precoat step usually requires 1–1 1/2 hours.

### 8.4.4.1 Types of Ion Exchangers

A typical ion-exchange unit is in a fixed-bed arrangement consisting of a vertical cylindrical pressure vessel. It frequently contains one or more meters of exchange resin from which the water contacts in a downflow manner, with backwashing in the upflow manner. The two-bed system provides for anion retrieval in the first unit and cation removal in the following unit (Figure 8.16). This process configuration has been widely implemented and is efficient.

Another alternative is to send the water through a mixed-bed ion exchanger. Unlike a conventional ion-exchange column, which contains either cationic or anionic resin and is regenerated by a strong acid or a strong base, respectively, the mixed-bed arrangement contains cationic and anionic resin in the same bed. The resins are thoroughly mixed upon loading into the bed. Figure 8.17 is a schematic of the principles of the mixed-bed ion exchanger. Prior to backwash the two resins are separated by using inert resins with densities between those of the exchange resins. The inert resins form a buffer zone during backwashing. It is worth noting that treated effluent from the service period is commonly used to backwash the columns.

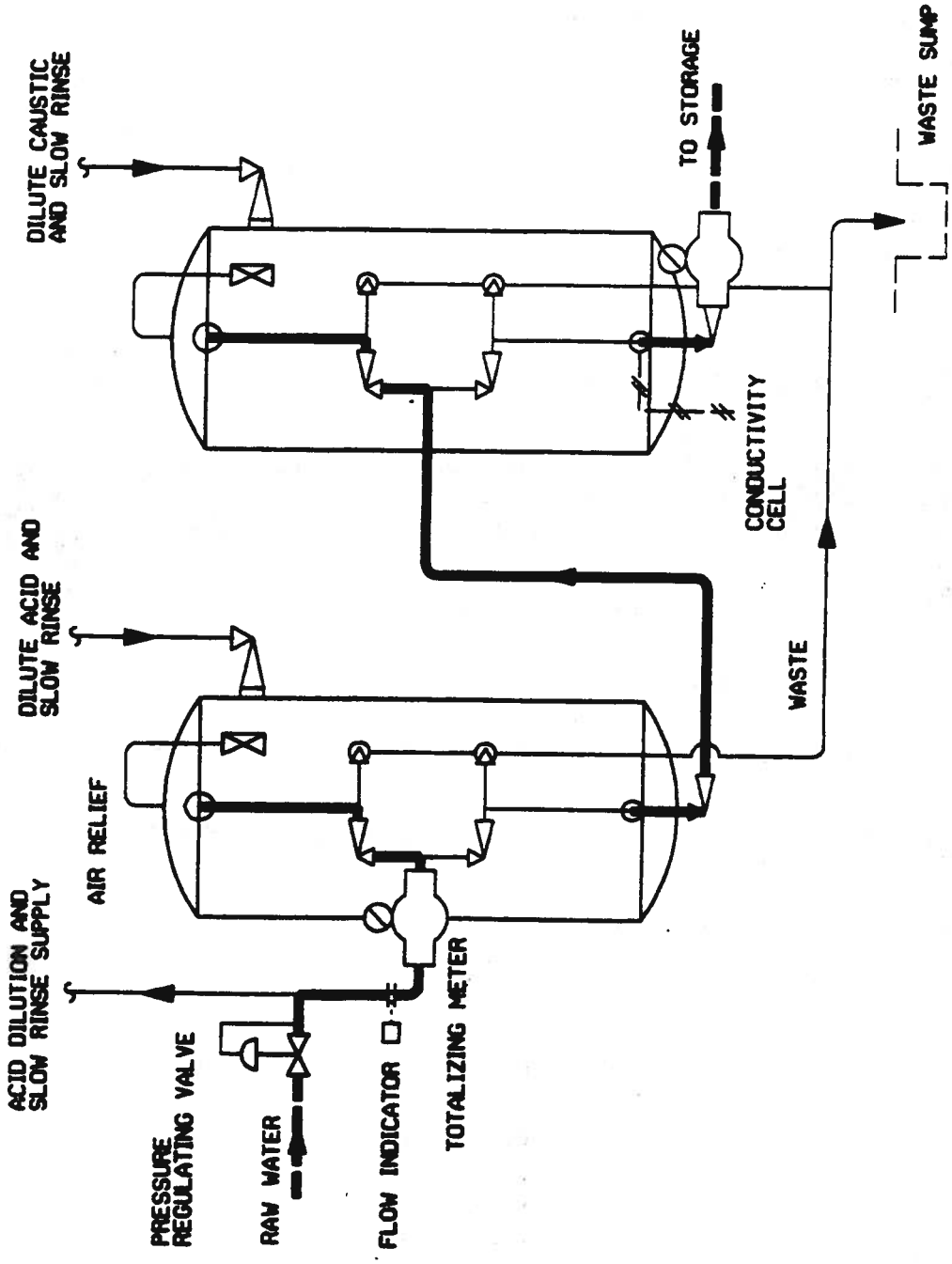


**Figure 8.16. Typical two-bed deionizing system (Perry)**

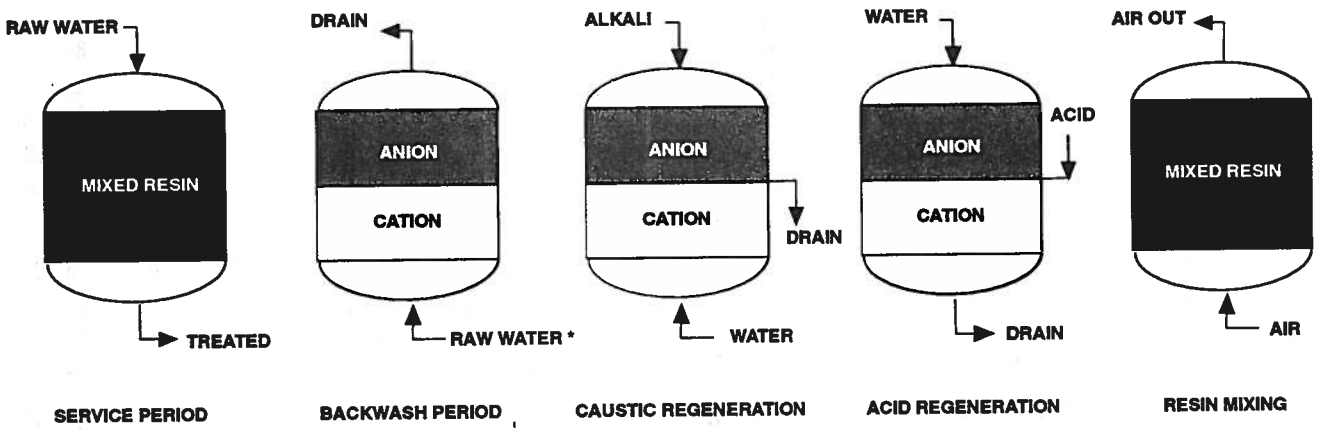


* Treated water from the service period is often used for backwash.

**Figure 8.17. Principles of mixed-bed ion exchange (Perry)**

Figure 8.18 is a schematic of a typical anion or cation ion-exchange module. The treatment of water by ion exchange involves a sequence of operating steps. From the equalization tank, which allows the metals in the liquid to be equally distributed, the water is pumped to the pH adjustment tank where chemicals are added to ensure that the metal ions are dissolved in the liquid. The pH-adjusted water is then pumped through a filter to extract any residual insoluble debris and then to the anion or cation exchange units. After the metals have been reduced to acceptable effluent levels, a final pH adjustment is normally employed.

The ion exchange column is set up in a three-column configuration. In such a configuration, two columns are used for primary processing, while the third unit is used as a polishing or spare unit. If both anion and cation columns are required for a service, then Figure 8.18 is modified. Another set of three ion-exchange columns, piped as shown, is added in series immediately following the existing ion exchangers.

#### 8.4.4.2 Factors Affecting Performance in an Ion-Exchange System

For this type of treatment to be effective, the waste stream must be in ionic form. Nonionic forms (insoluble particles, colloids, as well as neutrals molecules [$I_2$] and neutral complexes) that are incapable of undergoing ion exchange can be responsible for poor waste stream treatment. Some of the particulates and colloids may pass through the resin bed. However, the part that is trapped may coat the resins and reduce their efficiency. Prior to ion exchange, processing pretreatment steps may be required for such waste streams.

The physical and chemical properties of the exchange resin and the operating conditions also govern the performance of an ion exchange system. The important properties of the ion exchange resin include the following:

- exchange capacity,
- swelling equilibrium,
- degree of cross-linking,
- ionic selectivity,
- ion exchange kinetics, and
- chemical and physical stability.

Important operating conditions include the following:

- chemical and physical forms of species in feed solution (ionized or nonionized species), ionic sizes, and valences;

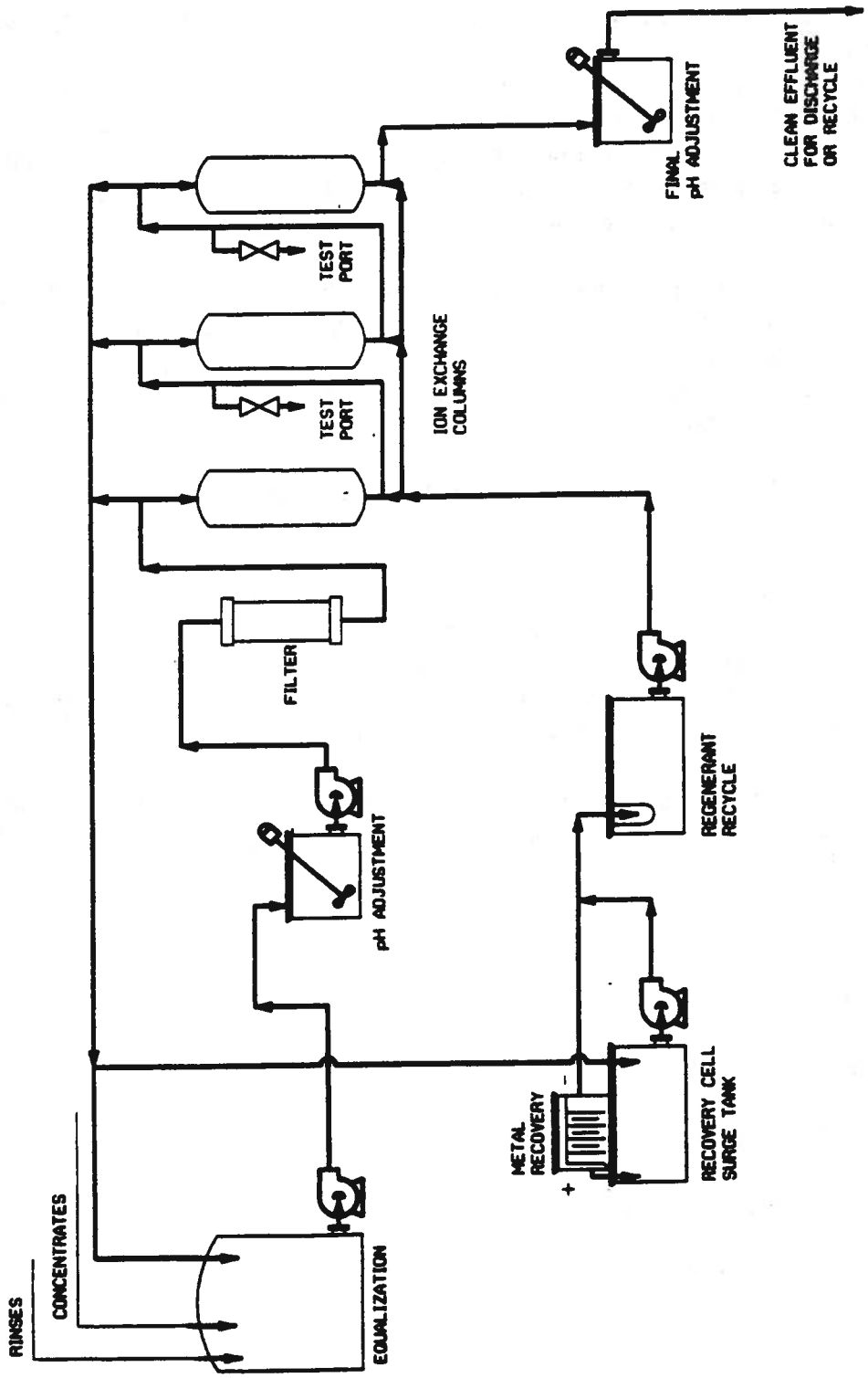


**Figure 8.18. Ion exchange module**

- temperature, pH, and flow rate of feed solution;
- design and dimension of ion-exchange beds (method of packing, whether a multistage system with separate cation and anion units or a mixed-bed system is used, height-to-diameter ratio); and
- level or degree of completeness of regeneration.

These factors have been researched and optimized by various ion-exchanger vendors, and it is recommended that they be consulted when considering the use of this process (Coplan and Mayo 1992).

### 8.4.4.3 Experience at Facilities

Although ion exchange is primarily used to remove inorganic metal contamination, it is also very useful in reducing high levels of radionuclides to effluent levels suitable for discharge. The following paragraphs describe how radionuclides were removed from water streams from processes at various facilities.

The uranium concentration at Hanford increased to 0.1 kg/m$^3$ in the groundwater underlying a retired liquid waste disposal site in 1985. To achieve the necessary effluent levels for discharge of the uranium, an anion exchange–based uranium process was developed and implemented. Bench-scale test results were used to determine the correct strong-base anion exchange resin for the operation. The column consisted of 2.8 m$^3$ of a commercial resin supported by a 0.15-mm screen. To collect resin that may pass through the screen with the decontaminated water, a 0.07-mm strainer was employed and a back pressure of 2.9 psia was used to prevent gas buildup in the column. For regeneration processes, 11.4 m$^3$ of 2 *M* $NaNO_3$ solution was used at a rate of 0.23 m$^3$/min. A pretreatment with carbonate was attempted to achieve a high resin loading but was discontinued because of pump failure and ion-exchange column fouling. Operating cycles averaged 5–7 days before regeneration processes were required. An average of 94% removal was observed through eight cycles with an approximate uranium loading of 0.035 kg/kg resin. The cycle length increased with decreasing uranium concentration levels, thus producing a higher quality of effluent.

At ORNL, many LLLW streams are generated by the radiochemical research at the institution. The large volume of dilute radioactive waste is treated by ion exchange. The major radionuclides of concern are Sr-90 and Cs-137. The use of media such as zeolite in ion-exchange columns has proven to be an effective method of removing the Cs-137 from competing elements. The removal of strontium can become a problem because zeolites do not give a large separation from other alkaline earth elements such as calcium.

The Electric Power Research Institute (EPRI) has sponsored pilot-plant testing of ion-exchange columns and media to remove radioactive waste liquid as a cost-effective process. A single mixed bed composed of cesium-selective synthetic mordenite and two organic resins was used.

The organic resins tested were a sulfonated styrene-divinylbenzene (DVB) gel (strong acid cation) with nominal 10% DVB crosslinking and a Type I quaternary on a styrene-divinylbenzene gel (strong base anion). The mordenite was chosen because of its proven capabilities in removing cesium from radioactive waste liquid. Mordenite has a rated 20/50 U.S. mesh particle size distribution, with an estimated ion-exchange capacity of 1.7–1.8 meq/ml. For this application, the chemical constituents rather than the radionuclides were the exhausting species. Therefore, the system performance is sensitive to changes in waste feed chemistry. In general, the liquid effluent activities for the monitored nuclides remained in the $1 \times 10^{-6}$ μCi/g range through the first 500 bed volumes of waste. The test, terminated after 781 bed volumes, returned a final leakage of 20% for Cs-137. The leakage of the filtered Co-58, Co-60, and I-131 was less than 1.5%.

Several ion-exchange materials were tested for processing liquid wastes at the Diablo Canyon Power Plant. As a result, two precautions were recommended to be taken during ion-exchange operation. First, since efficiency of the ion-exchange resins is dependent on the influent chemistry of the liquid being processed, a monitoring system can be implemented to record the activity, conductivity, pH, and total suspended solids for every batch of liquid input into the system. Second, because particle activity of small micron-sized materials rendered standard filters and ion-exchange processes ineffective in producing acceptable effluent levels, chemical pretreatment should be employed to remove particulate cobalt.

### 8.4.5 Carbon Adsorption

Carbon adsorption is the physical mechanism in which organic and inorganic (to some extent) molecules are separated from an aqueous liquid waste stream. Carbon adsorption processes have demonstrated practical and economical methods for removing dissolved organic and toxic pollutants from water. Liquid-phase carbon adsorption systems have proven to be most useful in extracting soluble organics in the semivolatile (molecular weight, approximately 150–300) to the nonvolatile (molecular weight greater than 300) molecular range. Only small amounts of soluble volatile organics (molecular weight less than 150) and inorganics are adsorbed onto the carbon because of their solubility in water and their small particle size, which is usually less than 0.001 microns. Table 8.6 shows general adsorption data for the various classifications of organics obtained from adsorption isotherms.

**Table 8.6.**
**General Adsorption Data for Organics Obtained from Adsorption Isotherms**

| Approximate Molecular Weight | Classification | Milligrams Adsorbed Per Gram of Carbon* |
|---|---|---|
| 100 | Volatile substance | ≈1.8 |
| 200 | Semivolatile substance | ≈157 |
| 350 | Nonvolatile substance | ≈500 |

*Adsorption capacities are estimated for an equilibrium concentration of 1.0 ppm by mass (ppmm) at a neutral pH.

In separating large quantities of volatile and low-molecular-weight semivolatile substances, biological reactors and air stripping are normally employed, and liquid-phase carbon adsorption systems are useful as a polishing process for removal of smaller quantities of organics to improve the quality of the treated liquid effluent. An influent stream with a large particle size has the capability of disabling the system. In addition, the concentration of suspended solids should be less than 200 ppmm to eliminate constant backwashing of the solid particles. Total hydrocarbon concentrations should be less than approximately 10 ppmm. The major advantage of carbon adsorption is its applicability in efficiently removing a wide variety of organics despite concentration and flow-rate variations.

### 8.4.5.1 Activated Carbon Adsorption Capacity

In carbon adsorption, the separation of contaminants from water in a liquid waste stream is accomplished by contacting them with activated carbon, which has a preferential attraction for the toxins. Activated carbon is a nonpolar sorbent and has a preference to sorb the least polar and least soluble components. Carbon is an attractive material for adsorption because of its large surface area-to-volume ratio. During the thermal activation process, the carbon is altered to provide a porous construction with a large range of shapes, sizes, and depths. An important feature in activated carbon is the variance in pore size throughout the mass. Pore diameters range from the macro level (above 100 angstroms) to the micro level (under 10 angstroms), with the meso level range in the middle. During the adsorption process, the less soluble high-molecular-weight organics become entrapped into the micropores, while the less polar volatile organics are usually attached on the micropores of the material.

For treating small amounts of organics, flow rates through the column tend to range from 2 to 10 gpm per square foot of surface area, depending on the contact times required to remove a specific contaminant (usually 6–40 min). When suspended solids are present in the influent (greater than 5%), a backwash rate of 15–20 gpm per square foot of surface area for 10–20 min per day is essential to remove particles from the carbon pores.

Granular and powdered activated carbon are two types of carbon generally used in the adsorption process. Both are processed in the same manner except that powdered carbon is pulverized to a diameter with a top size of 74 microns. However, in observing the particle-size distribution of powdered carbon, the diameter can be as low as 0.1 micron. Granular carbon has a diameter of greater than 0.1 mm. The particle size differences in carbon promote different levels of operation. Powdered carbon is usually added to a contaminated waste liquor in a contacting basin. Because of the small particle size of powdered carbon, penetration of the boundary layers of the liquid is difficult. Therefore, a coagulant such as a polyelectrolyte is added to bond with the carbon, thus increasing its density and enabling it to move throughout the tank, collecting molecules of organics and eventually settling at the bottom of the basin. Since powdered carbon is usually not regenerated, the volume of sludge created is increased. For decontamination purposes, granular carbon is usually used for separation of organics.

Granular carbon is normally inserted in a fixed-bed column where the influent liquid is contacted with the solid particles in a downflow manner, and the liquid effluent is taken from the bottom of the vessel. Different configurations exist and are discussed in the next section.

### 8.4.5.2 Carbon Adsorption Systems

For liquid-phase operations, there are basically three types of adsorbers used in carbon systems: fixed beds, pulse beds, and fluidized beds. Nearly 95% of the operating processes are either fixed or pulse beds. In a fixed-bed adsorber (Figure 8.19), the liquid normally enters at the top of the column and slowly passes through the carbon continuously until the volume of carbon is exhausted. The spent carbon is then removed and regenerated or disposed of and fresh carbon emplaced. Some advantages and disadvantages of the fixed-bed system are as follows:

- Advantages:
  - Requires lowest building profile.
  - Requires least operator attention.
  - Results in fewer carbon fines in the effluent.
  - Can be inspected internally each time an adsorber is emptied.
  - Requires lower inlet pressure for liquid to pass through the system.
  - Can be designed to operate with some suspended solids in the feed.
- Disadvantages:
  - Requires the greatest amount of plot area.
  - Usually requires higher capital investment than a pulse bed.
  - Can have variation in concentration of adsorbate in effluent from zero, when a fresh adsorber is placed onstream, to specification value when a spent adsorber is taken offstream. This could result in product quality variations in a single-train system.

In a pulse-bed system (Figure 8.19), the liquid is passed through a distributor and proceeds in an upflow manner through the carbon bed while the carbon advances down through the adsorber. This allows small amounts of spent carbon to be removed as an equivalent amount is added at the top of the vessel. The frequency of the pulsing action is a function of the inlet conditions and effluent criteria. The system is operated so that less than 10% of the carbon is pulsed at any one instance. Some advantages and disadvantages of the pulse bed system are as follows:

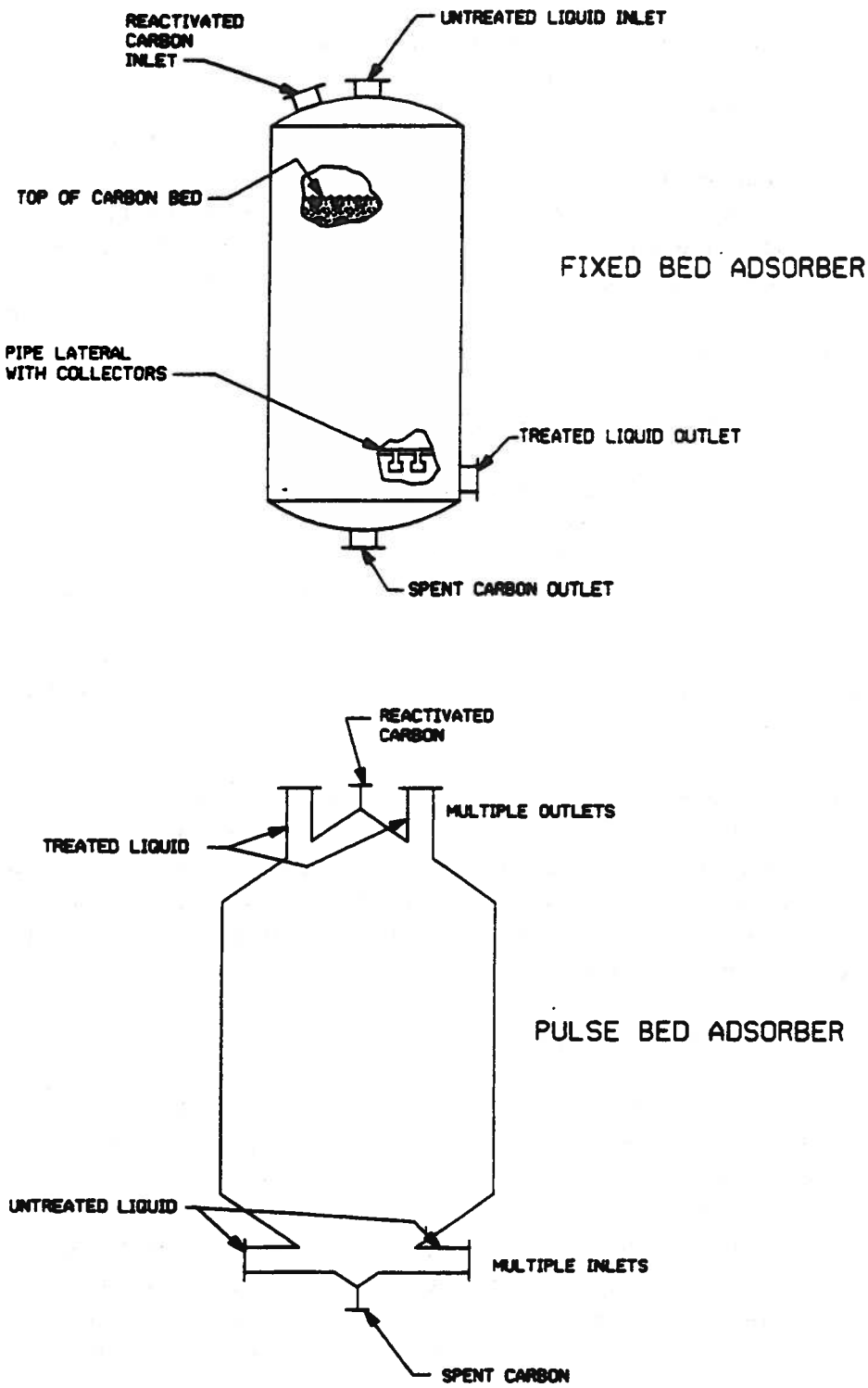


**Figure 8.19. Carbon adsorption systems**

- Advantages:

  - Requires the least plot area, which is a key consideration when putting a system into an existing plant.
  - Can be controlled to minimize variations in effluent quality.
  - Has lowest carbon dosage in applications having a long mass-transfer zone.
  - Recycles water used to wash spent carbon after each pulse, so the volume to be handled in a short time is much less than in a fixed-bed system.

- Disadvantages:

  - Cannot treat liquids containing suspended solids, so prefiltration is generally required.
  - Cannot empty adsorber during normal operations, so inspection and/or repairs can only be accomplished by taking an adsorber offstream and emptying the entire contents of carbon into temporary containers.

All these systems can be placed in various configurations. System configurations include a single adsorber, two or more adsorbers placed in series, two or more adsorbers in parallel, and four or more adsorbers placed in a series-parallel arrangement. A single fixed-bed adsorber would generally be used when the carbon exhaustion rate is low and the cost of replacing the carbon is a minor operating expense. Fixed beds placed in series are used when a high removal rate is necessary for the effluent and offstream time should be at a minimum. Fixed beds are also necessary when the influent concentrations fluctuate widely. Beds placed in parallel are designed for handling large flow rates and continuous operation. The configuration can be changed to achieve the maximum results. For decommissioning operations, a single fixed adsorber or a series-parallel arrangement is generally used.

### 8.4.5.3 Carbon Adsorption (Vapor Phase)

Carbon adsorption can also be employed to remove organic components from a gaseous waste stream. Separating soluble organics from gas streams is not often necessary during decommissioning operations.

However, vapor-phase carbon adsorption is useful in removing low concentrations of volatile organic compounds (VOCs) and other organics in a gaseous waste stream. If the concentration of VOCs and other organics is high in the gaseous waste stream, then simple condensation using either chilled water or deep refrigeration is appropriate. With a large concentration of organics, it is necessary to cool the airstream to −100°C to obtain a 95% reduction. Another alternative is liquid scrubbing or absorption. Large quantities of organics input in batch-type operations can be destroyed in a fume incinerator, where the organic material is converted to carbon dioxide and

water vapor. The systems and configurations used in vapor-phase carbon adsorption are similar to those of liquid-phase carbon adsorption. Like adsorption in the liquid phase, the amount of gas adsorbed depends on the characteristics of the influent organics (volatility, temperature, polarity, molecular size, etc.) and the solid adsorbent properties (pore structure, polarity, and specific surface area). Other adsorbents used for vapor-phase operations with properties similar to carbon are molecular sieves, silica gel, alumina, and zeolites.

In vapor-phase carbon adsorption, variables such as the operating temperature and the relative humidity must be considered. At lower temperatures, the adsorption efficiency is higher, as shown for toluene at 70°F and 100°F in Figure 8.20. The relative humidity affects the adsorptive capabilities of the carbon. A significant amount of water is adsorbed relative to the amount of gas adsorbed at a relative humidity above 50–60% as shown in Figure 8.20. At a relative humidity above the critical point on the isotherm, water takes most of the available sites on the carbon, thus dramatically reducing the efficiency of the system. For removal capacities, treatability studies are necessary to determine the most efficient process approach. Regeneration of the carbon proceeds in the same manner as for liquid carbon adsorption.

## 8.5 Gaseous Processing

Gaseous processing during a decommissioning project includes effluent control and monitoring for radioactive materials released into the air and potentially released to the environment and the processing of gases or vapors released during waste treatment of materials. Gaseous effluent processing is described, and then gas or vapor processing is discussed.

### 8.5.1 Gaseous Effluents

A gaseous effluent processing system should be provided to protect the public and the environment from the airborne radioactive particles and gases generated during decommissioning operations. Extremely high collection efficiencies are required to meet the release limits for airborne radioactive effluents. Therefore, special filtration equipment has to be incorporated to collect the radioactivity entrained in effluent air.

In nuclear facility decommissioning, the installed ventilation systems and equipment should be appropriate to properly clean the effluent air. However, some existing ventilation systems may not have the appropriate equipment needed during decommissioning or the existing equipment may not be currently operable. In these cases, the proper equipment should be installed in the existing system, or completely new ventilation systems should be installed with the appropriate collection equipment.

Radioactive effluents that are found in decommissioning projects will be primarily of only one type: particulates. However, up to two other types of radioactive effluents may be encountered: halogens (notably iodine) and noble gases (krypton and xenon). The particulates include all the fission product isotopes, corrosion and activation isotopes, and transuranic isotopes. The particulates are generally found on the smallest particles entrained in the air (i.e., <1 micron).

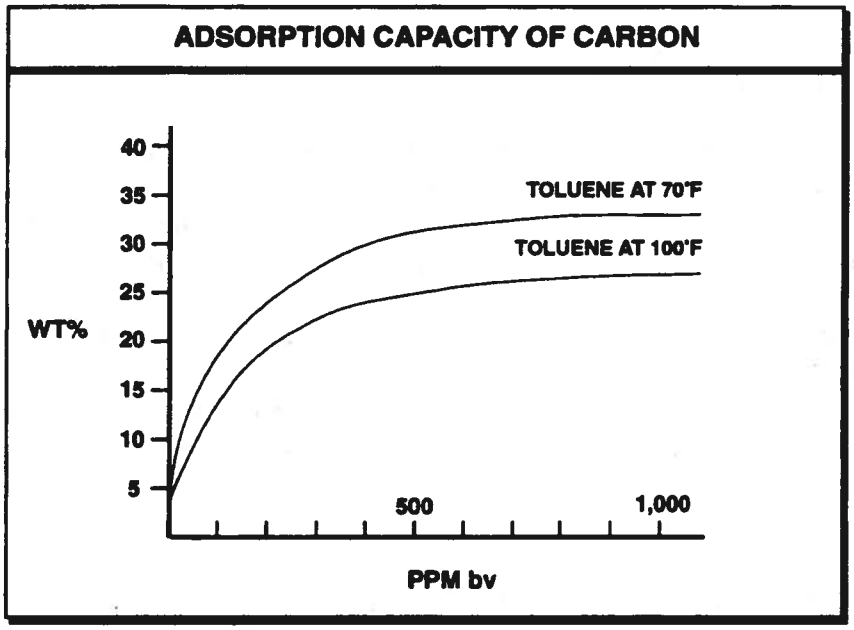


**Adsorption Isotherms at Different Temperatures**

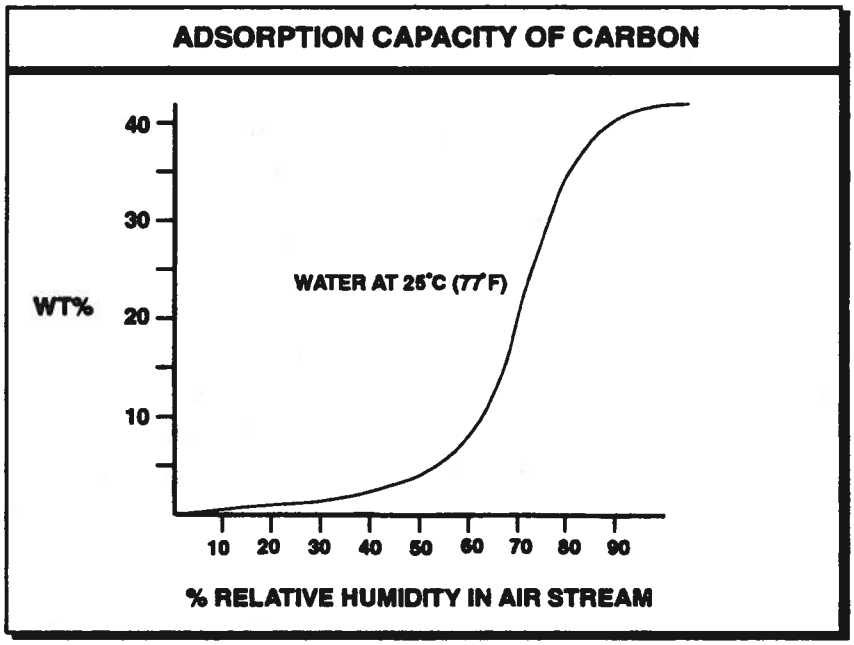


**Relative Humidity Isotherm**

**Figure 8.20. Adsorption capacities of carbon**

Particulates are usually collected on fibrous filters. The halogens are gaseous and are not effectively collected on this filter media. They are, however, able to be collected on activated carbon. Noble gases, even though chemically inert, tend to be held by the activated charcoal, whereupon they can radioactively decay. However, because of the age of most radioactive materials at the time of decommissioning, only particulates and occasionally I-129 will be of consequence.

The equipment required for the collection of radioactive materials in the exhaust air include prefilters, HEPA filters, and, if required, charcoal adsorbers, and demisters or spark arrestors (ASME N509). A typical flow diagram for the effluent filtration system is shown in Figure 8.21. The demister or spark arrestor, if required, is upstream of all components to protect the filters from high water loading or fire. The required prefilter is next. The primary components of the filtration equipment, the HEPA filter and the charcoal adsorber, follow. The HEPA filter follows the prefilter and the charcoal adsorber is at the far downstream location of the filtration unit. Each of these components is described briefly here.

Demisters are required if there is a possibility that large amounts of entrained water may be present in the exhaust air. The demisters protect the primary components from damage or loss of function due to the presence of entrained water. The demisters need to be over 99% efficient in trapping moisture that would foul the following filtrations components.

Spark arrestors are required if there is a potential for sparks generated during decommissioning activities such as plasma arc cutting to enter the heating, ventilating, and air conditioning (HVAC) system. The spark arrestors prevent the primary components from damage due to fire.

Prefilters are required to remove the gross amounts of particulate loading prior to the collection in the HEPA filter. This enables the HEPA to collect the small particulates without having its capacity reduced due to collection of larger particulates. The prefilter would remove the larger particles generated from decommissioning processes as well as atmospheric dust and "people-generated" particulates (e.g., lint, skin, and hair) (Burchard et al. 1970).

HEPA filters are employed to remove the smallest particulates from the exhaust air stream before release to the environment. These filters are designed for high efficiency. They should remove greater than 9.97% of particles down to 0.3 microns in size. (These particles contain most of the radioactive materials that are collected on filters.)

Charcoal adsorbers are required whenever quantities of radioactive iodine or noble gases are expected in the effluent. Activated carbon will collect both elemental iodine ($I_2$) and organic iodine (e.g., $CH_3I$).

Appropriate taps for inserting instrumentation and test equipment (ASME N510) are included in the filter assembly. Figure 8.22 shows the HEPA filter unit itself, including the prefilter, HEPA filter, charcoal absorber unit, and the miscellaneous taps.

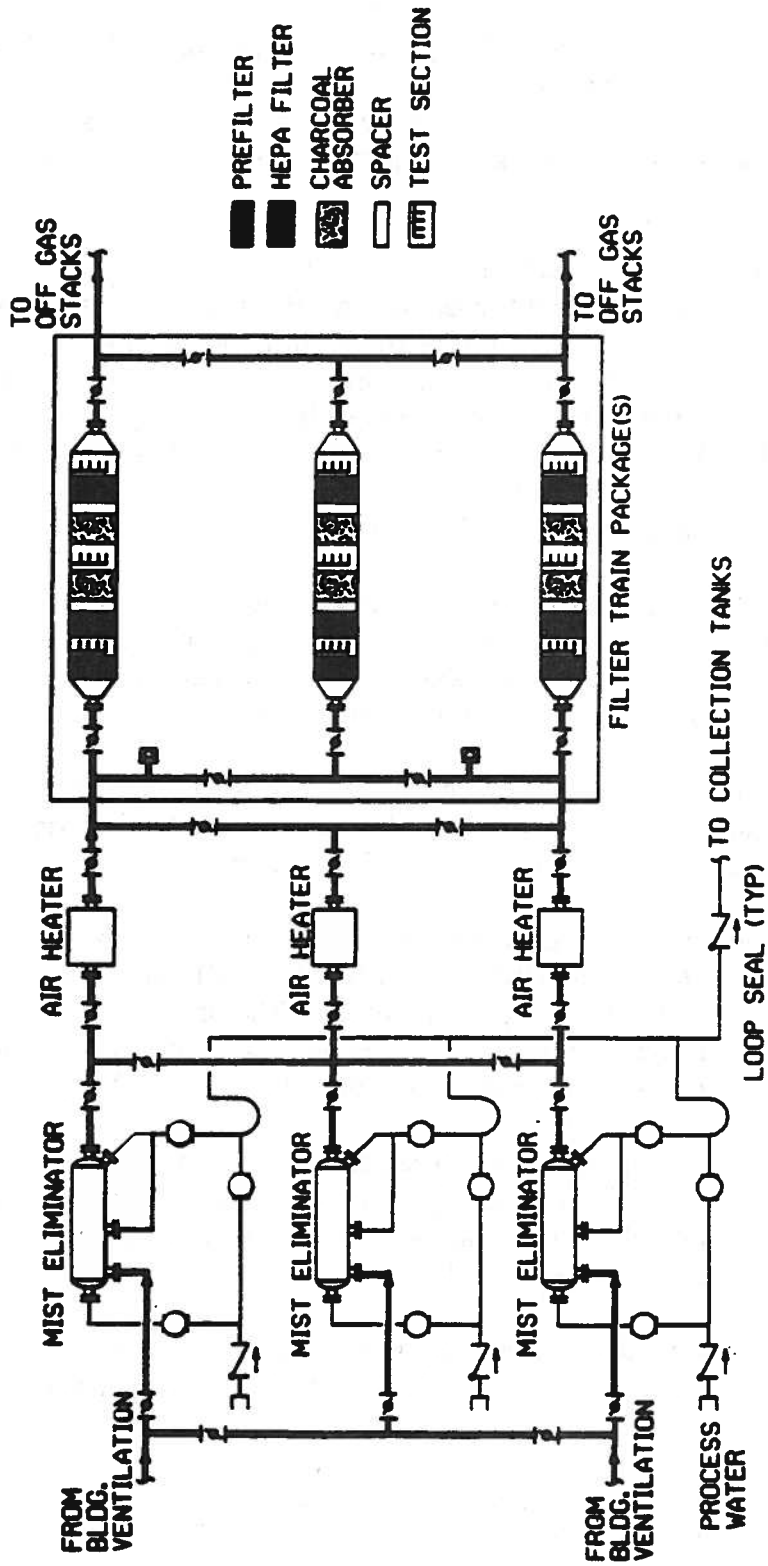


**Figure 8.21. Typical gaseous effluent processing flow diagram**

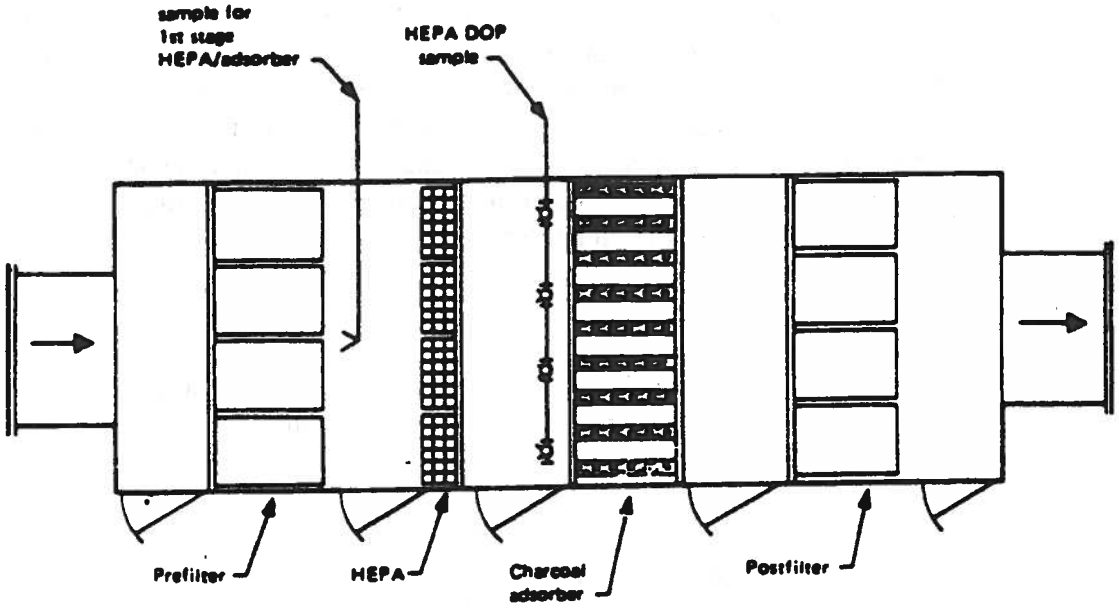


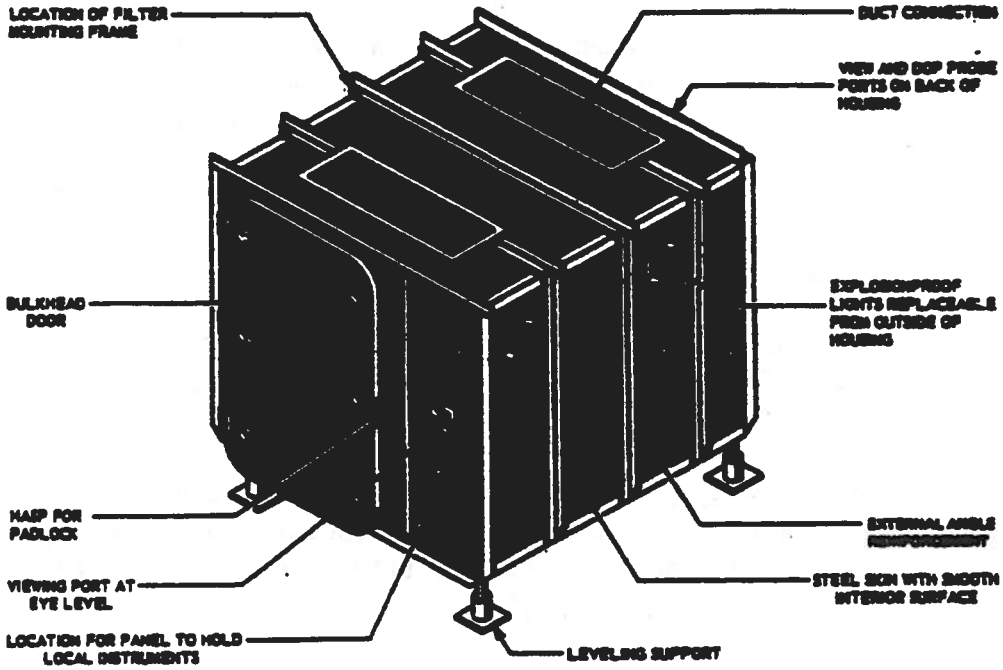


**Figure 8.22. Common HEPA filter configuration and test manifolds**

### 8.5.2 Gases and Vapors

Gases and vapors may be generated during decommissioning activities. The generation of gases or vapors is usually a result of other processes that are described in this handbook. Accordingly, the dependent gas/vapor extraction-separation processes have been defined in this chapter as being part of liquids, solids, and thermal technologies. For the purposes of this discussion, the major distinction between a *gas* and a *vapor* is the degree of difficulty in condensing the constituents. On a decommissioning site, all gases requiring treatment must generally be treated as a gas, as opposed to being liquefied prior to treatment. For gaseous substances, there are two possible treatment methods: separation or incineration.

An attractive emerging technology for separating gas, vapors, and/or liquids containing multiple constituents is membrane technology. Gas absorption, which is described in detail in that section, is a mass transfer unit operation that can also be employed to extract desired gases or vapors from a gaseous stream into a liquid stream, where the liquid can then be processed in the appropriate unit.

An attractive process for incinerating gases is the fume incinerator, which is described in more detail in Section 8.6.2.5. Most hazardous gases can easily be destroyed in an incinerator. However, incinerators have high heat requirements and are costly for dilute gases. Efficient operations call for the use of enrichment devices to concentrate the waste gases before incineration.

Vapors are also processed either by separation or incineration. However, the predominant methods used to process vapors are condensation and carbon adsorption prior to using gas treatment technology to remove trace constituents. Condensing vapors into an aqueous phase and treating the effluent liquid is an efficient manner of treating vapors if the concentration is sufficient.

## 8.6 Thermal Treatment

There are three basic categories of thermal treatment: low temperature (below 300°F), medium temperature (between 300°F and 1,400°F), and high temperature (between 1,400°F and 2,200°F). These temperature limits are applicable within ±20%.

The primary focus of the low-temperature treatment category is water evaporation (i.e., drying). The medium-temperature treatment category addresses organic evaporation. The high-temperature treatment category addresses combustion technology and its derivatives: starved air, pyrolysis, and oxygen enhancement.

Air pollution control systems (APCSs) are generally used with thermal process equipment and are addressed further in Section 8.6.3. A small segment of APCS equipment is described under the low- and medium-temperature treatment sections because one of the principal technology

distinctions is the selection and sizing of the appropriate APCS equipment used to complement the thermal reactors.

Many types of thermal reactors can theoretically be used in low- and medium-temperature treatment configurations. Furthermore, many of these thermal reactors can be used in both temperature treatment configurations. Only the two most frequently used thermal reactors—indirect and direct—are addressed in this handbook.

The term *drying* encompasses chemical reactions other than water evaporation. It includes the removal of bound water (the water of crystallization) and of water contained in microorganisms (if they are present in significant quantities). The impact of this distinction is that drying can theoretically include thermal treatment in the 212–500°F range. This expanded thermal treatment range can include a significant fraction of organic solvents frequently used at a decommissioning site. Because of the interrelationships between drying, organics separation, and the selection of the most appropriate thermal reactor, the low- and medium-temperature treatment categories are combined into one category. However, it is important to remember the distinction between drying and organic separation. There are occasions when it may be necessary to do both, however, and sometimes this objective can be accomplished in one thermal treatment configuration. There are also situations where it is advisable to perform these two unit operations in series.

### 8.6.1 Low- and Medium-Temperature Thermal Treatment

Low-temperature thermal treatment is frequently referred to as *drying* because the major application is evaporation, primarily of water. Figure 8.23 reflects the wide application range of thermal drying when compared to other technologies used to separate liquids from solids.

In general, the principal low-temperature treatment used at a decommissioning site is thermal drying. As compared to mechanical dewatering, thermal drying is more effective since it can remove all the surface water present in a sludge. Obviously, it cannot operate efficiently when the percentage of free water is high. When the solids concentration is 30% or more, mechanical dewatering, whose operating efficiency is generally 50%, should probably precede thermal drying. Thermal drying is usually more expensive than mechanical drying.

At a decommissioning site, there should be little concern about bound water, which does not dissociate from most minerals until the solid temperature is above 400°F. However, organic microorganisms may be present and they contain water. This water is also included in the bound-water fraction since it cannot be dissociated at temperatures much below 400°F. The point of emphasis is that surface water can be completely removed when a homogeneous solid is treated at 212°F or slightly above. At this temperature under many circumstances, the percentage of bound water could still approach 20%. This point is academic if no petroleum derivatives with a molecular weight less than 150 are present in the sludge because all the subject thermal reactors are capable of operating at temperatures up to 500°F at essentially the same cost as

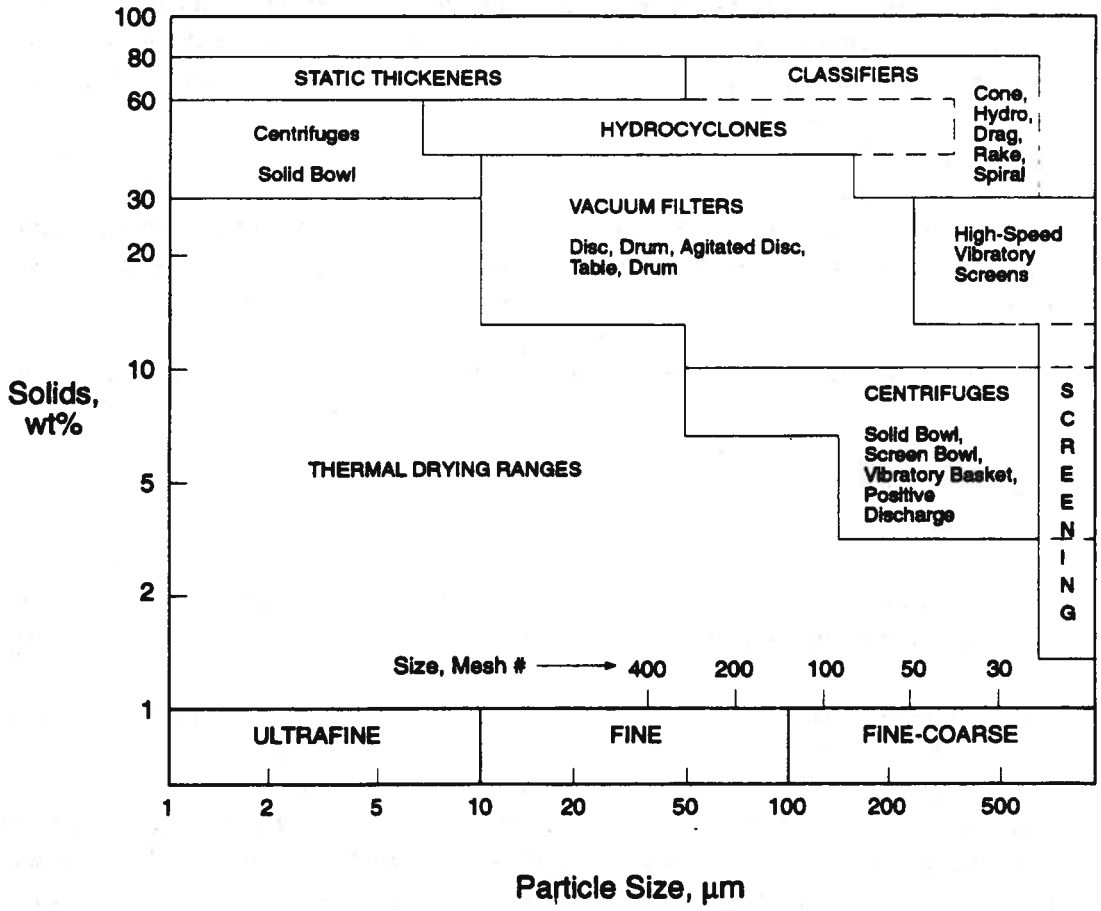


**Figure 8.23. Particle size limitations on solids-liquids separation of wettable minerals for various applicable equipment classifications**

operating at 250°F. However, if these petroleum derivatives are present, they must be included in the vapor extraction quantification and in the downstream equipment selection process.

The major distinction between low- and medium-temperature treatment is not the difference in thermal reactors. Rather, these classifications were established to distinguish the manner in which the vapor would be treated after separated from the solids. Low-temperature treatment focuses on the separation of water from the solids and the petroleum derivatives. Medium-temperature treatment focuses on the separation of organic derivatives from the solids. Assumptions associated with medium-temperature separation of petroleum derivatives from solids are that petroleum substances with boiling points less than 212°F are removed with the water and that oil-water separation is relatively straightforward should these constituents be present.

#### 8.6.1.1 Indirect Thermal Reactors

At least three types of indirect thermal reactors are used extensively in removing water and/or oils from solids. All these units can be placed on skids or trailers and can process from 1–2 tons/hr, provided the particle top size is less than 2 in.

Since steam is generally not available at a decommissioning site, a hot-oil system is usually the heating medium of choice (Figure 8.24). The only limitations associated with a hot-oil system are height and width since the maximum modular size that can be transported is a 4-million Btu/hr system.

All the indirect thermal reactors considered have two means for controlling throughput: temperature and residence time. The combined temperature of the vapor and the solids is used to establish the residence time. Since solvents are frequently used at a decommissioning site, explosion-proof accessories should be specified. These reactors normally operate at a slight negative pressure, so inleakage should be minimized; otherwise, vapor treatment and flame safety become more complex.

Indirect calciners use a variable-speed drive similar to other thermal reactors; however, the heat-transfer mechanism is different. When oil or gas is used as an energy supply, hot combustion gases heat the outside of a rotating cylinder that can be supplied with or without agitating flights. When electricity is used, radiation is the primary heat-transfer mechanism. Another distinguishing feature of indirect calciners is that they can operate at temperatures up to 1,800°F, which exceeds the temperature requirements for solids-water-oil separation at a decommissioning site. Moreover, the indirect calciner is capable of processing a larger particle top size. In this instance, top size is determined by the feed and product-transfer mechanism.

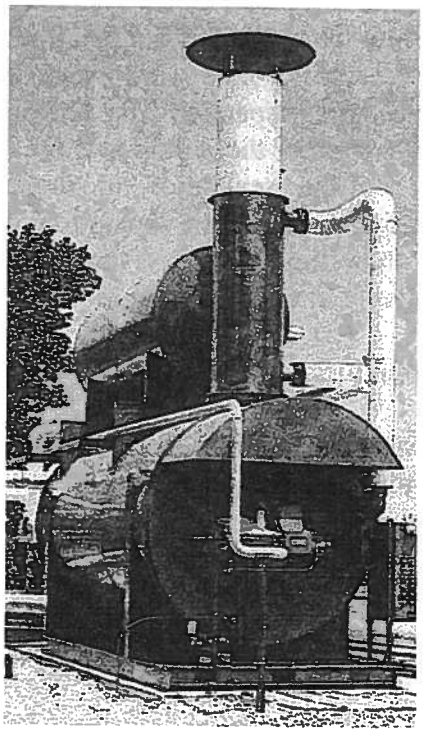

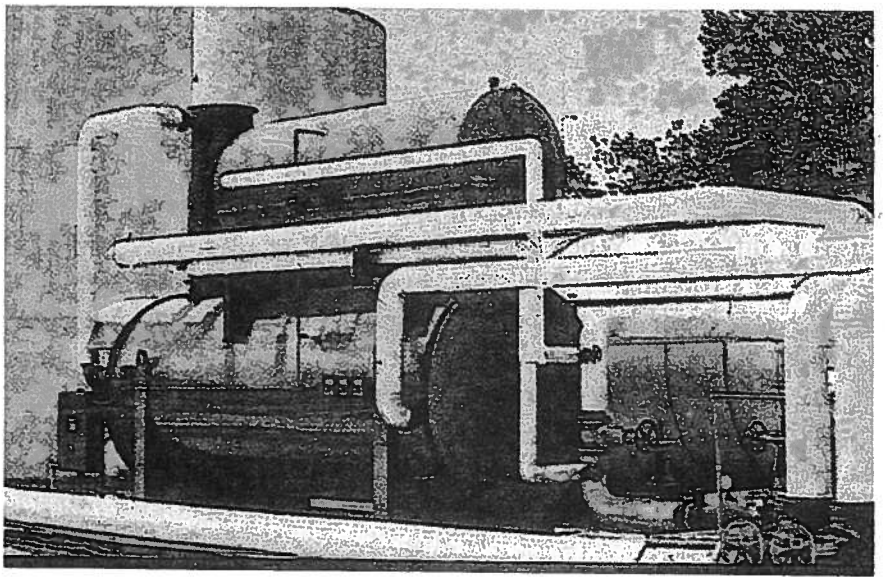

**Figure 8.24. Modular oil heater**

### 8.6.1.2 Direct Thermal Reactor

Direct thermal reactors are used primarily at fixed-based installations where large throughput rates will exist for a 10–20 yr time frame and when significant quantities of organic derivatives are not present. For these conditions, the fuel savings may outweigh the complexity and costs associated with increased gas flow and the foreign constituents associated with the products of combustion, excess air, and additional particulate carryover.

A rotary dryer is similar to a rotary kiln except that it does not use a refractory. Rotary dryers contain interior lifting flights (as opposed to the agitating flights sometimes inserted in a indirect calciner). The hot air is supplied by a burner mounted on the stationary breeching attached with a sealing mechanism to the rotating cylinder.

### 8.6.1.3 Low-Temperature Equipment

The primary purpose of low-temperature treatment is to separate water from solids. Normally, this can be accomplished when the temperature of the solids reaches 212°F. When no natural organic derivatives are present, the vapor temperature is 260°F. When these derivatives are present, it may be necessary to increase the vapor temperature to maintain a 212°F solids temperature. Figure 8.25 shows two sludge dehydration configurations that use indirect thermal reactors. It is important to note that one of these configurations is used in series with mechanical dewatering devices. When only water vapors are present, a large fraction of the water vapor can be removed in a spray tower where the cooling water enters at around 90°F and the condensed effluent leaves between 140°F and 170°F, depending upon ambient conditions. A fraction of this water may be recirculated through an air cooler to achieve the desired temperature of 90–100°F. Nearly all the water can be removed with a refrigerated chiller operating at –40°F. The top configuration in Figure 8.25 includes a venturi scrubber to remove the particulate conveyed in the vapor stream and a packed tower that can also be used to complete the aforementioned condensation and/or neutralize acid gases (if they are present). If a venturi scrubber is used to remove particulate in front of a condenser (spray tower or packed bed), it should have an independent water supply so that the coils of the air cooler refrigerated chiller do not become fouled.

### 8.6.1.4 Medium-Temperature Equipment

The primary purpose of medium-temperature treatment at a decommissioning site is to separate organic derivatives from solids so that further treatment can be simplified and/or waste quantities reduced. Figure 8.26 shows a two-phase operation in which the water fraction is removed in the first stage and the oil fraction is removed in the second stage. Further discussion on this type of equipment is not warranted since significant fractions of organics are not expected in decommissioning projects.

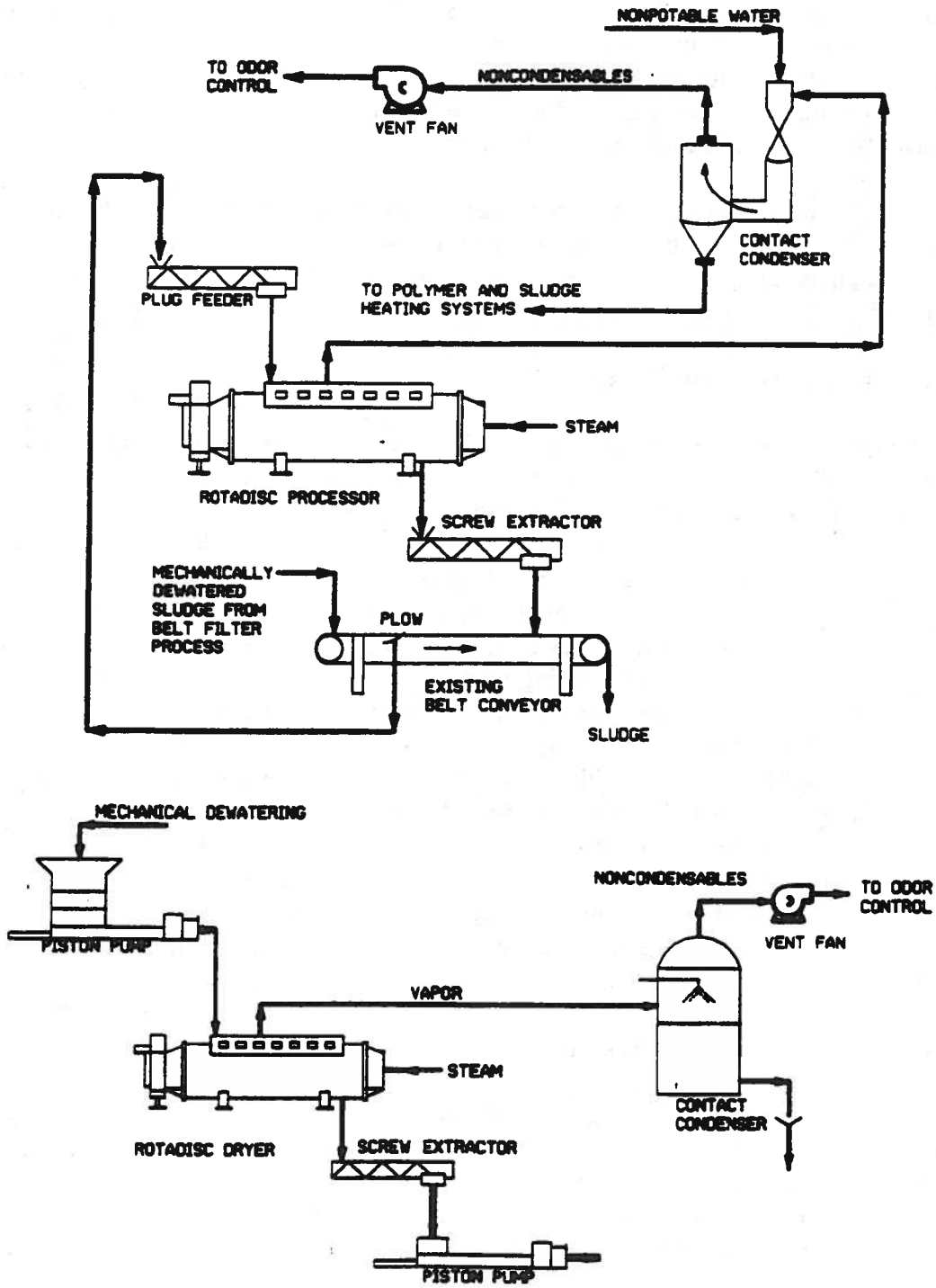


**Figure 8.25. Thermal sludge dehydration systems**

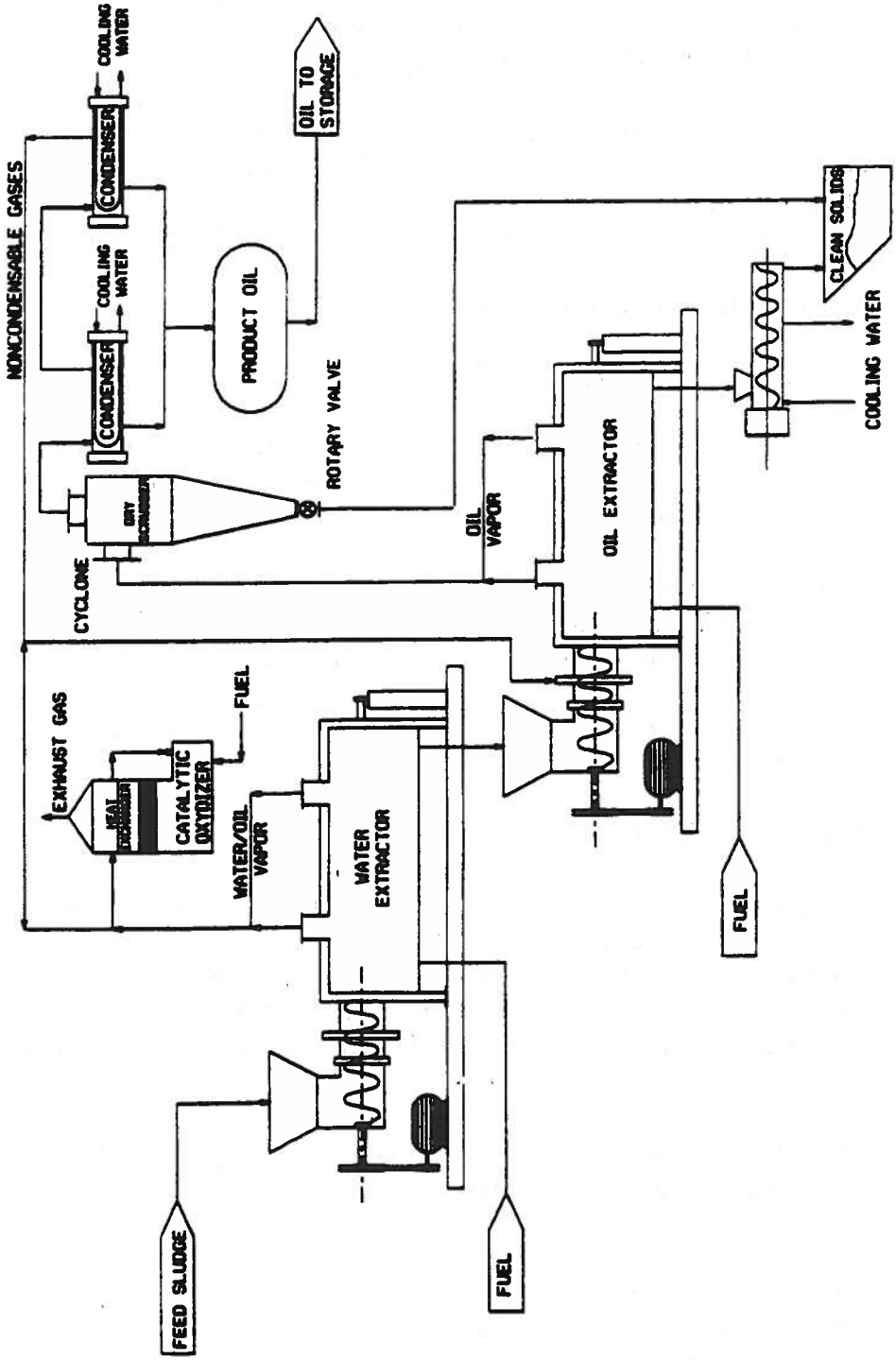


Figure 8.26. Medium-temperature treatment arrangement

### 8.6.2 High-Temperature Treatment

The primary purpose of high-temperature treatment is to destroy the waste. The predominant treatment process used is incineration. Currently, numerous incineration configurations are available for use in a decommissioning project. To a great extent, the type of incineration selected is dependent upon the quantities and composition (solids, liquids, sludges, gases) of the wastes to be destroyed. Discussion in this section has been divided into two subsystems: combustion systems and air pollution control systems. The reason for this division is that the selection of the most appropriate APCS is as important as the selection of the proper combustion subsystem since the regulatory guidelines focus more on APCS operations than on combustion.

#### 8.6.2.1 Combustion Systems General Guidelines

Two general principles apply to all types of combustion systems. First, combustion systems are designed around the type of feedstock to be burned. For example, solids require more combustion volume than liquids, and liquids require more combustion volume than gases. To ensure 99.99% destruction removal efficiency (DRE) or greater, all combustion systems are designed for a minimum of two second residence time.

Second, an important combustion parameter is excess air. Excess air is the quantity of air, greater than stoichiometric air requirements, present in the combustion chamber. Excess air requirements vary with feedstock characteristics. For example, the minimum excess air for a gas, liquids, or solids feedstock is 10%, 20%, and 50%, respectively. Pyrolysis and starved air and/or oxygen enhancement processes are not normally recommended for a decommissioning project given the operational complexities.

#### 8.6.2.2 Solids Combustion Systems

In a decommissioning project, solids generally can be treated using a process by which the solids are combusted. The principal process by which this is usually accomplished is rotary kiln incineration. Rotary kilns are used most frequently to treat solids because they are capable of consistently removing organic constituents from solid particles greater than 1 in. in diameter. Whenever inorganic hazardous constituents are present, further treatment in another process may be required.

In addition to treating solids, rotary kilns can also effectively destroy gases, liquids, and sludges. Burners, sludge lances, and a solid-feed mechanism are all mounted on the kiln face. It should not be inferred that a rotary kiln can treat all these waste classes as effectively as the specialized incinerators previously addressed. Nonetheless, the rotary kiln is the most widely used incinerator when multiple classes of wastes are generated at a less-than-consistent rate. It is important to remember that a single mode of operation is not possible when several classes of wastes are to be processed. While it is not necessary to make frequent processing adjustments, two process constraints must be recognized: (1) kiln is not an effective drying or dewatering device, and (2) the basic principle governing operations is that the combustion reactions cannot

proceed in the solid bed until the water is nearly evaporated. Therefore, the total water content at any point in time should be limited to the range 30% to 50%. If the percentage of solids is high, there should be less water present (unless the throughput is derated). If half the kiln is used as an evaporator, there is not adequate time to volatize the organic constituents prior to combustion (i.e., the bed temperature must reach a minimum temperature in the 300°F–500°F range depending upon the type of organic present). When water is introduced in the kiln with no solid bearing organics present, the subject constraint is not applicable. Literature produced by the American Society of Mechanical Engineers (ASME) can provide a more complete description of the incineration process.

### 8.6.2.3 Sludge Combustion Systems

Sludge is defined as any pumpable material that does not fall into the aforementioned liquid definition. Most of the liquid waste generated at a decommissioning site falls into this classification because the suspended solids top size exceeds 1/64 in. A few liquid waste streams fall into the sludge classification because of their high viscosity levels. Sludges cannot be fed through a liquid burner since the particles eventually plug the small spray nozzle in the burner tip. These nozzles can be enlarged, although doing so increases the difficulty in maintaining the flame envelope attached to the burner tip. When the flame scanner cannot see the flame, the safety features on the fuel lines prevent the fuel from being fed.

When large quantities of sludge are present, the contaminants are most effectively destroyed in a fluidized bed (Figure 8.27) where air is inserted into the windbox (1). The purpose of the bed plate (2) is to uniformly distribute the fluidizing air across the bottom surface area so that steady-state conditions (i.e., no channeling) occur. Most of the combustion occurs in the fluidized bed (3). The uppermost section, the freeboard (4), is the area where suspended solids continue to burn and/or become disengaged from the upward moving gas stream. The feed inlet can either be above or into the fluid bed. Supplemental and/or startup fuel can be inserted either into or above the bed.

The fluidized bed is an excellent combustion chamber given the turbulent bed action and the extended gas residence time (5–8 s) in the freeboard. Moreover, the fluidized bed represents a large heat sink that can compensate for wide variations in feedstock composition and throughputs. The primary disadvantage of a fluidized bed is its inability to consistently handle large quantities of particles over 1 in. in diameter. Eventually, these particles will sink to the bed and/or allow channeling to occur. Channeling will eventually result in decreased combustion efficiency.

Sludge is generally inserted into the combustion chamber above the bed, using a sludge lance. A sludge lance looks much like the fuel pipe and nozzle of a liquid incinerator and is designed using the same combustion criteria. With a sludge lance, however, no attempt is made to maintain a flame near the burner tip. The atomizing media (high-pressure air or steam), along with the nozzles in the spray head, are used to obtain the smallest practical particle size that can be introduced in suspension. Large particle surface area-to-volume ratios improve combustion efficiency. Frequently, sludge lances are supplied with quick disconnects, built-in purge

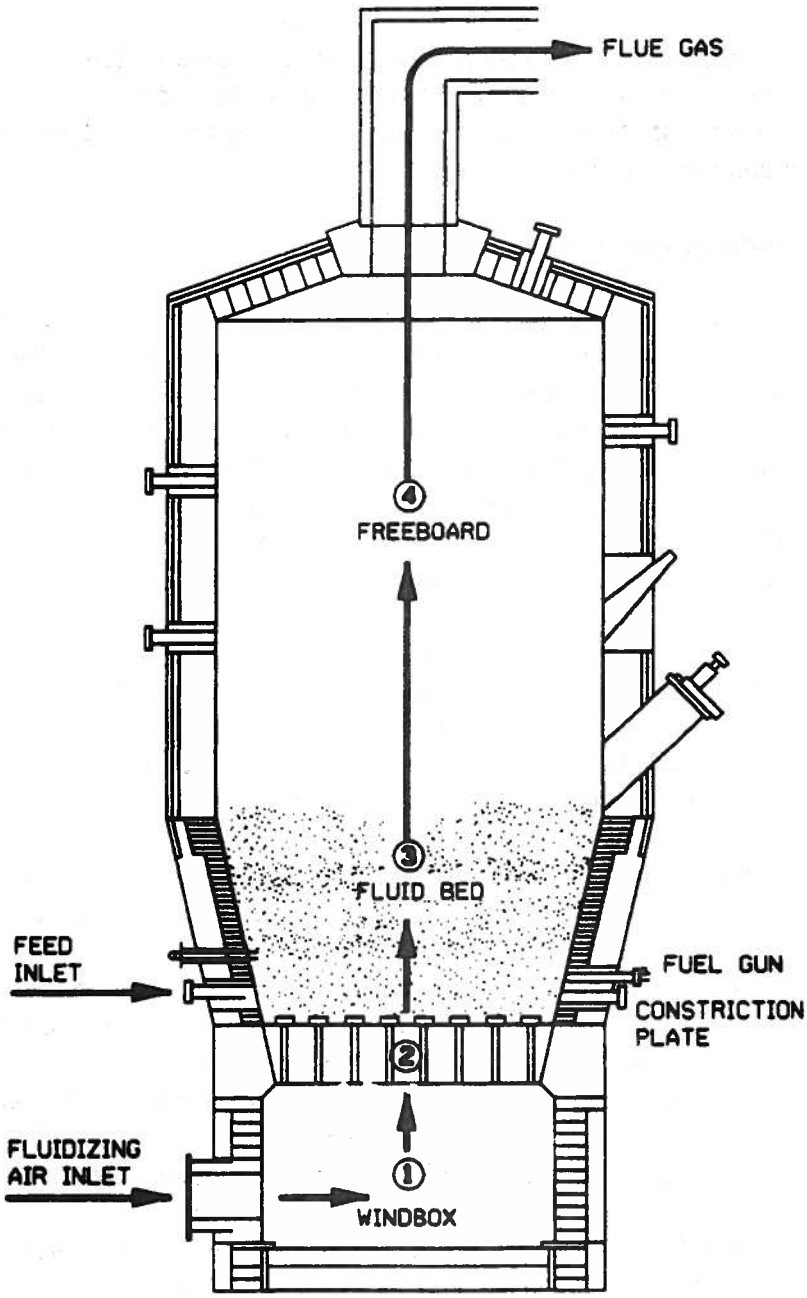


**Figure 8.27. Fluid-bed configuration**

mechanisms, and replaceable spray heads for spray pattern modifications. Sludge lances are also used with liquid incinerators and rotary kilns because they are the most effective means for introducing sludges into a combustion chamber. When used with liquid incinerators and rotary kilns, the applications are more restricted than with a fluidized bed.

Feedstock is generally inserted into the fluidized-bed medium via multiple ports. The insertion of feedstock above the bed or through the walls or roof simplifies the feed manifold. The sludge lances are arranged to provide the most appropriate spray pattern over the top of the bed without causing excess or premature particulate carryover.

#### 8.6.2.4 Liquid Combustion Systems

In the field, a liquid incinerator resembles the fume incinerator described for gas combustion in the next section with one exception: A liquid incinerator includes a burner housing that is mounted on the combustion chamber rather than the in-line gas burner that is found on fume incinerators. Dual-fuel liquid incinerators are designed to burn both gas and liquids. It is also possible to purchase a gas burner that can be mounted onto the primary combustion chamber wall.

The term *liquid* has a very specific meaning that is frequently overlooked. There are three major specifications for a liquid fuel:

- a heat content greater than 4,000 Btu/lb,
- a viscosity less than 100 SSU, and
- a partial top size less than 1/64 in.

Very few liquid waste streams at a decommissioning site will fit this definition without some form of pretreatment. The reason for this limited specification is that a liquid incinerator must be designed to discharge the liquid through a nozzle at a rate identical to the combustion rate. The design should be such that the flame begins about 1/8 in. away from the burner tip.

There are two basic classes of liquid burners: low velocity and high velocity. The standard clean-fuel incinerator is usually a low-velocity burner because it is more energy efficient from a liquid transfer viewpoint. (However, this is not a significant cost consideration at a decommissioning site.) High-velocity burners are usually preferred for waste destruction because they provide a more vigorous flame pattern at a smaller, more controllable volume. Above 1,400°F, homogenous mixing is the primary variable in achieving a high DRE. It is more important than temperature level because this is the point at which combustion reactions occur in nanoseconds as opposed to microseconds.

#### 8.6.2.5 Gas Combustion Systems

Fume incinerators burn gases collected from hoods or tank inerting, decontamination, and waste treatment systems. They are primarily used to control odors and the emission of particulates. Filtration of the effluent is required to collect any particulate radioactivity entrained in the gases, even if an APCS is not otherwise required. Figure 8.28 is a picture of a fume incinerator with a heat recuperator and a catalyst chamber. Additional information on filtration is located in Section 8.5.1.

### 8.6.3 Air Pollution Control Systems

There is a high probability that most thermal treatment configurations will require an APCS. The high-temperature treatment system requires the most complex system because of the number of hazardous constituents anticipated to be found in the off-gases. Fortunately, however, these systems are composed of components that can be used in other less complex situations.

There are three classes of APCS systems: wet, dry, and combination. The wet systems are simpler to operate, less costly to purchase and operate, and more effective for acid gas neutralization. The dry systems are more effective in removing particulates. In some areas, particulate loading regulations encompass volatile particulate matter exiting the APCS. For this reason, combination or hybrid systems have evolved.

Figure 8.29 shows the process equipment associated with an APCS. There are three major components: quench tank, spray tower, and baghouse. The purpose of the quench tank is to cool the flue gases to the 800–1,000°F temperature range before entering the spray tower. A liquid neutralization reagent is sprayed into the tower that provides adequate residence time. The neutralized gases enter the baghouse at temperatures between 400°F and 500°F in order to minimize corrosion and to minimize the amount of moisture the bag contacts (if the bags are damp, particulate matter cannot be removed). Since it is not technically and/or economically practical to cool the gases any further, volatile particulate matter, which is still in the vapor form, cannot be effectively captured.

Figure 8.30 shows the process equipment associated with a combination APCS for an incinerator (Shor 1992). The rotary kiln and the afterburner are the combustion components. Following these components are a quench tower, venturi scrubber, packed column scrubber, and ionizing wet scrubber.

## 8.7 Conclusions

Waste treatment is sometimes necessary to prepare materials for their disposition. Materials that are to be disposed of need to meet the waste acceptance criteria for the intended disposal site. Meeting these criteria may require solidification, stabilization, or encapsulation. Liquids typically require treatment to remove radioactive or hazardous materials prior to their release. Other materials can be incinerated or otherwise thermally treated to prepare them for off-site shipment.

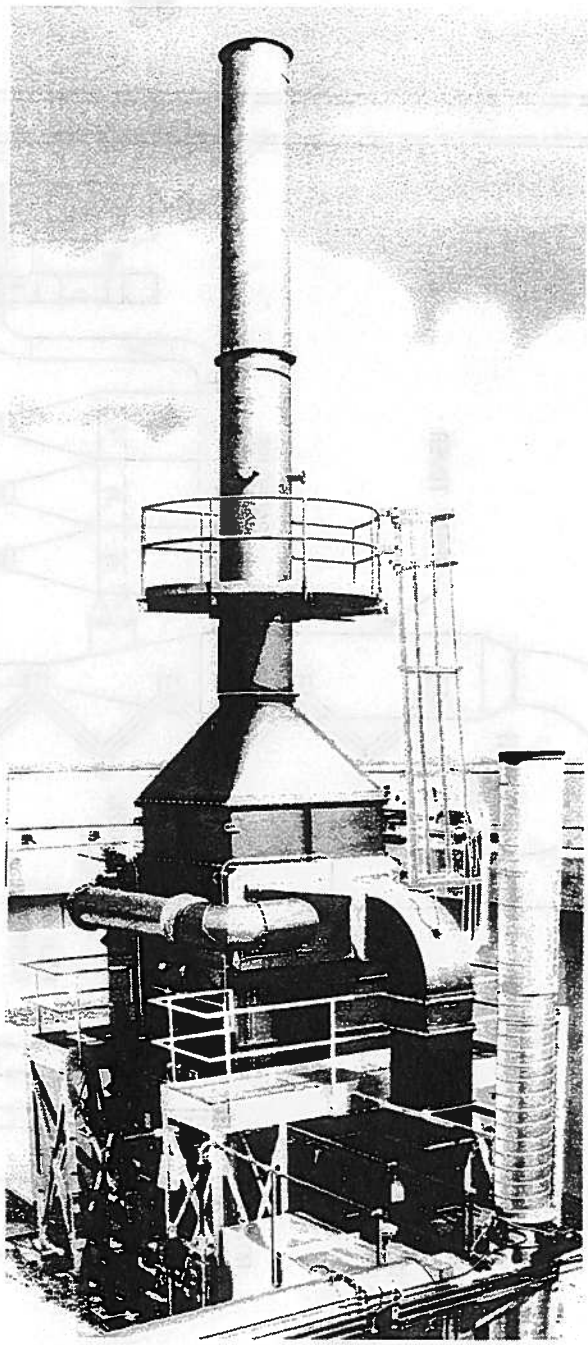

**Figure 8.28. Fume incinerator**

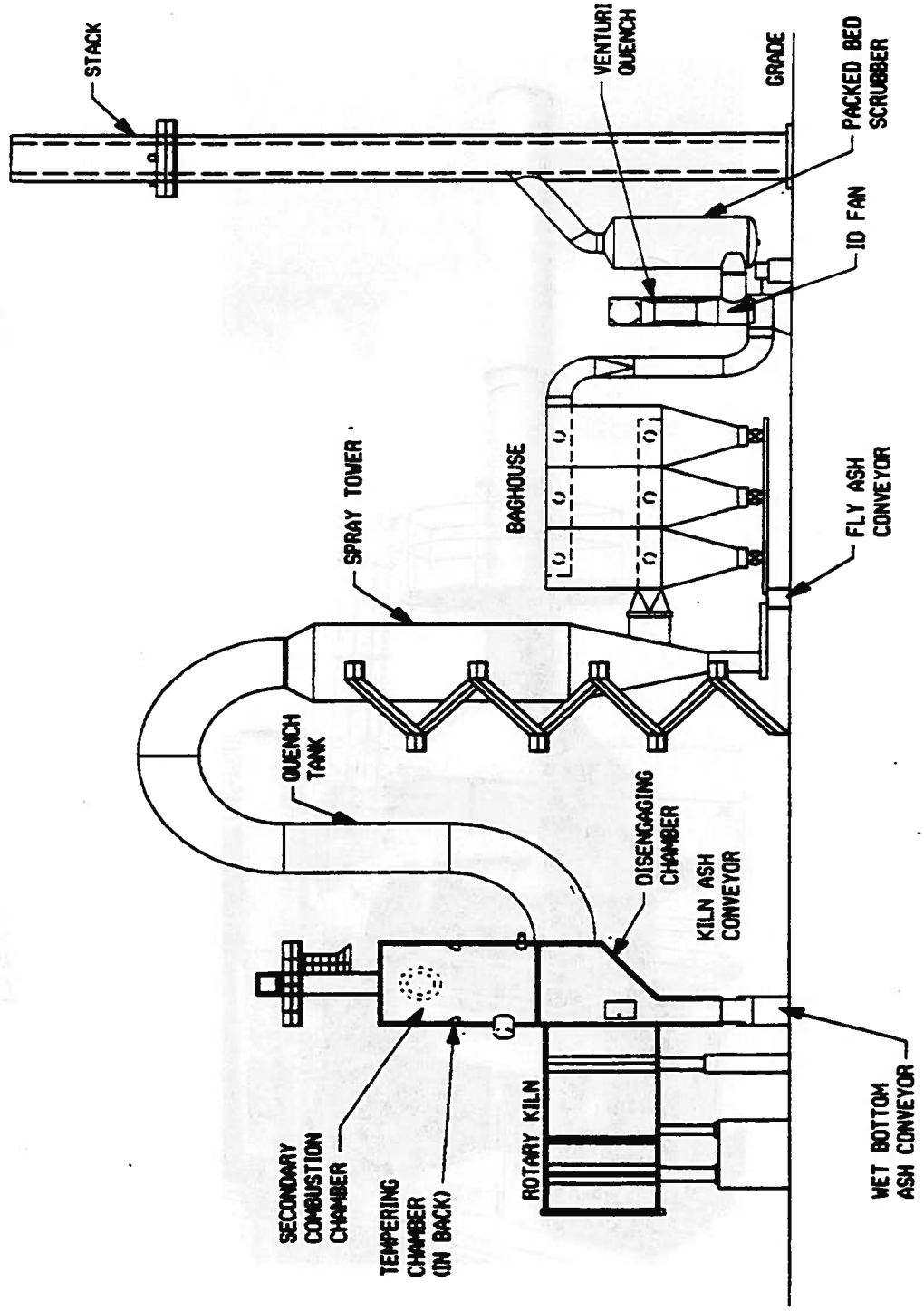


**Figure 8.29. Combination type APCS**

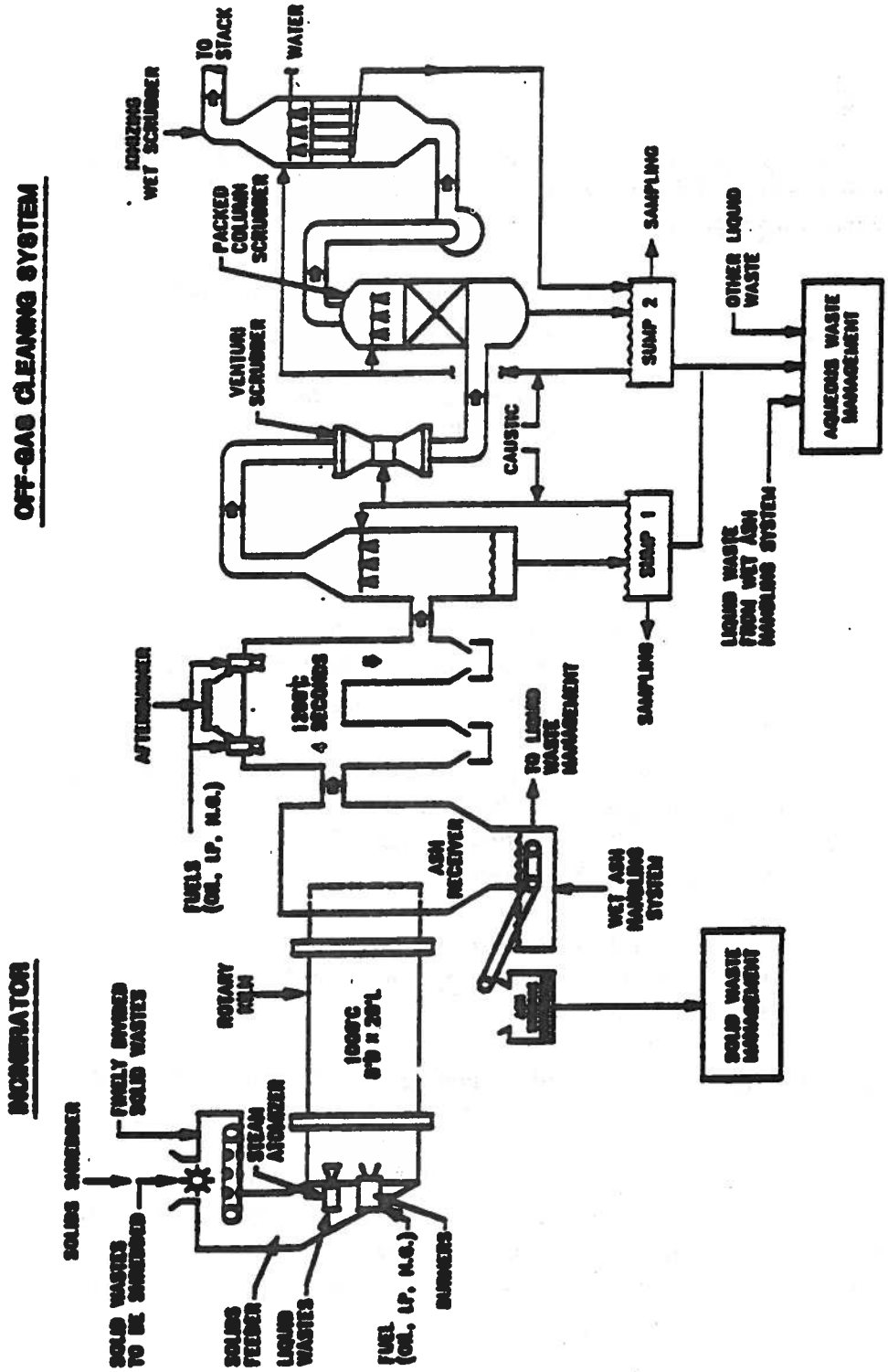


Figure 8.30. Typical APCS components for an incinerator

Waste treatment technologies applicable to a decommissioning project have been briefly discussed in this chapter. Further information is amply available on these technologies. The reference list provided here is only a sample of the available references.

## 8.8 References

ANSI/AWWA B100–80. (American National Standards Institute/American Water Works Association) *AWWA Standard for Filtering Material.* American Water Works Association. Denver.

API (American Petroleum Institute). 1969. *Manual on Disposal of Refinery Wastes: Volume on Liquid Wastes.* American Petroleum Institute. Washington, D.C.

ASME (American Society of Mechanical Engineers) *Nuclear Power Plant Air-Cleaning Units and Components.* ASME N509-1989. American Society of Mechanical Engineers. New York.

ASME *Testing of Nuclear Air Treatment Systems.* ASME N510-1989. American Society of Mechanical Engineers. New York.

Borisch, R. R., and S. Marchetti. February 1987. *Supernatant Treatment System Process Design: Report of Work Performed March, 1982–September, 1987.* DOE/NE/44139-35 (DE87014109). U.S. Department of Energy. Washington, D.C.

Brettschneider, D. and M. Gross. 1991. "Development of a Polishing System for FEMP Wastewater Discharges." In *Environmental Remediation '91: Cleaning Up the Environment for the 21st Century.* Proceedings of the ER'91 Conference, Pasco, Washington, September 8–11, 1991.

Burchard, C.A., et al., 1970. *Nuclear Air Cleaning Handbook: Design, Construction and Testing of High Efficiency Air Cleaning Systems for Nuclear Application.* ERDA76-2, W.C.11-75.

Calgon Liquid Purification Systems and Carbon Services Corporation. Product information for Carbon Adsorption Systems. Pittsburgh.

Campbell, D. O., D. D. Lee, and T. A. Dillow. 1990. "Ion-Exchange Processes for Low-Level Liquid Waste Treatment." In *Proceedings of the International Topical Meeting on Nuclear and Hazardous Waste Management: Spectrum '90.* Knoxville, Tennessee, September 30 through October 4, 1990. American Nuclear Society, Incorporated. La Grange Park, Illinois.

Canter, L. W., and R. C. Knox. 1985. *Ground Water Pollution Control.* Lewis Publishers, Incorporated. Chelsea, Michigan.

Center for Metals Production. 1992. *Application of Plasma Technology in the Environmental Waste Processing Industry.* CMP Report No. 92-5. The EPRI Center for Materials Production. Palo Alto, California.

Center for Metals Production. 1985. *Electric Arc Furnace Dust, Disposal, Recycle, and Recovery.* CMP Report No. 85.2. The EPRI Center for Materials Production. Palo Alto, California.

Cheremisinoff, P. N. 1987. *Wastewater Treatment: Pocket Handbook.* Pudvan Publishing Company. Northbrook, Illinois.

Conner, J. R. 1990. *Chemical Fixation and Solidification of Hazardous Wastes.* Van Nostrand Reinhold. New York.

Coplan, B. V., P. J. Mayo 1992. *Liquid Waste Management.* In Radioactive Waste Technologies. Eds. A. A. Moghissi; H. W. Godbee, and S. A. Hobart. American Society of Mechanical Engineers. New York.

Delegard, C. H., et al. 1986. "Characterization and Anion Exchange Removal of Uranium from Hanford Ground Water." In *Waste Isolation in the U.S., Technical Programs and Public Education.* Vol. 1. Ed. R. G. Post. Waste Management '86.

Dobbs, R. A., and J. M. Cohen. April 1980. *Carbon Adsorption Isotherms for Toxic Organics.* EPA-600/8-80-023. U.S. Environmental Protection Agency. Cincinnati.

EPA (U.S. Environmental Protection Agency). January 1983. *Treatability Study.* Volume III: Technology for Control/Removal of Pollutants. EPA-600/2-82-001c, Change 2. U.S. Environmental Protection Agency. Washington, D.C.

EPA. *Stabilization/Solidification of CERCLA and RCRA Wastes: Physical Tests, Chemical Testing Procedures, Technology Screening and Field Activities.* EPA/625/6-891 022.

EPA. *Design Manual: Dewatering Municipal Wastewater Sludges.* U.S. Environmental Protection Agency. Washington, D.C.

Fleming, H.L., July 1992. "Consider Membrane Pervaporation." *Chemical Engineering Progress.*

Gibbons, J.J., and R. Soundararajan. 1988. *The Nature of Chemical Bonding Between Modified Clay Minerals and Organic Wastes Materials.* American Laboratory, 20(2): pp 38-46.

Great Lakes Environmental Incorporated. 1990. *Oil Water Separators. Industrial Wastewater Treatment Equipment and Systems.* Addison, Illinois.

Jacob, N. P., et al. 1987. "PWR Waste Liquid Processing Using Zeolite and Organic Resins." In *Waste Isolation in the U.S., Technical Programs and Public Participation.* Vol. 3. Ed. R. G. Post. Waste Management '87.

James, K. L., and C. C. Miller. 1989. "Ion Exchange Media Testing for Processing Recyclable and Nonrecyclable Liquids at Diablo Canyon Power Plant." In *Waste Processing, Transportation, Storage and Disposal, Technical Programs and Public Education.* Vol 2. Ed. R. G. Post. Waste Management '89.

Kyles, J.H., K. C. Malinowshi, and T. F. Stanczyk. 1987. "Solidification/Stabilization of Hazardous Waste - A Comparison of Conventional and Novel Techniques, Toxic and Hazardous Wastes." *Proceedings of the 19th Mid-Atlantic Industrial Waste Conference*, June 21-23, 1987. Jeffrey C. Evans, ed. pp. 554-568.

Lakshmanan, V. I., M. M. Rishea, and M. C. Campbell. 1992. "Low Level Radioactive Waste Treatment—A Review with Selected Case Histories." In *Proceedings of the International Topical Meeting on Nuclear and Hazardous Waste Management: Spectrum '92.* Boise, Idaho, August 23–27, 1992. American Nuclear Society, Incorporated. La Grange Park, Illinois.

Lepore, J. V., and R. C. Albeit. 1991. "Membrane Separations of Organics from Aqueous Salt Solutions," *Waste Management* 11.

Lubowitz, H. R., and C. C. Wiles. 1979. "Encapsulation Technique for Control of Hazardous Waste Disposal." In *Toxic and Hazardous Waste Disposal*, Vol. 1. R. B. Pojasek, ed. Ann Arbor Science, Ann Arbor, Michigan.

MacNeil, J. C., 1988. "Membrane Separation Technologies for Treatment of Hazardous Wastes." *CRC Critical Reviews in Environmental Control* 18:2.

McCabe, W. L., J. C. Smith, and P. Harriott. 1985. *Unit Operations of Chemical Engineering.* 4th ed. McGraw-Hill Chemical Engineering Series. McGraw-Hill Book Company. New York.

Mayer, E. "Waste Minimization and Recycling with Membrane Filter Presses." Metcalf & Eddy, Inc. 1979. *Wastewater Engineering: Treatment, Disposal, Reuse.* 2nd ed. Revised by G. Tchobanoglous. McGraw-Hill Series in Water Resources and Environmental Engineering. McGraw-Hill Book Company. New York.

Muralidhara, H.S., 1989. "Solid/Liquid Separation: Waste Management and Production Enhancement." International Symposium, *Membranes and Membrane Presses.*

Patterson, J. W. 1985. *Industrial Wastewater Treatment Technology.* 2nd ed. Butterworth Publishers. Boston.

Perry, J. H., *Chemical Engineers' Handbook.* McGraw-Hill. New York.

Quapp, W., et al. *In Situ Vitrification (ISV) Buried Waste Processing Cost Comparisons to Ex Situ Processing Options.* Waste Management '92, Tucson, Az, March 1-5, 1992.

Rowe, G. December 1987. *Evaluation of Treatment Technologies for Listed Petroleum Refinery Wastes: Final Report.* American Petroleum Institute. Washington D.C.

Shor, J.T. July 1992. *Effluent testing for the Oak Ridge Toxic Substances Control Act mixed waste incinerator, December 11, 1991.* Oak Ridge K-25 Site, Tennessee. K/TCD-1031

Shuckrow, A. J., A. P. Pajak, and C. J. Touhill. 1982. *Hazardous Waste Leachate Management Manual.* Pollution Technology Review No. 92. Noyes Data Corporation. Park Ridge, New Jersey.

Sutter, H. G., et al. 1988. *Storage and Disposal, Technical Programs and Public Education.* Vol 1. Ed. R. G. Post. Waste Management.

Tittlebaum, M. E., et. al., 1985. *State of the Art on Stabilization of Hazardous Organic Liquid Wastes and Sludges.* CRC Critical Reviews in Environmental Control, 15(2): 191-193.

Unger, S. L., et. al. Undated. Surface Encapsulation Process for Stabilizing Intractable Contaminants. Environmental Protection Polymers, Hawthorne, California.

Walas, S. M. 1990. *Chemical Process Equipment: Selection and Design.* Butterworth Heinemann Series in Chemical Engineering. Series Ed. H. Brenner. Butterworth-Heinemann, Boston.

Weitzman, L., L. E. Hamel, and E. Barth. 1988. *Evaluation of Solidification/Stabilization as a Best Demonstrated Available Technology.* Paper presented at 14th Annual Hazardous Waste Engineering Laboratory Conference, Cincinnati, Ohio, May 1988.

Wiles, C. 1987. "A Review of Solidification/Stabilization Technology." *Journal of Hazardous Materials*, Vol. 14.

Yoshioka, M., et al. 1992 *Glass Melter and Process Development for PNC Tokai Vitrification Facility.* In *Waste Management*, Vol. 12. No. 1.

# 9.0 Decontamination

# 9.0 DECONTAMINATION

Decontamination is a major decommissioning activity that may be used to accomplish several goals, such as reducing occupational exposure, reducing the potential for the release and uptake of radioactive material, permitting the reuse of a component, and facilitating waste management. The decision to decontaminate should be weighed against the total dose and cost. This chapter presents both proven and emerging techniques which can be used to accomplish the goals stated above. The planner must familiarize himself or herself with these techniques to integrate decontamination with other decommissioning activities.

## 9.1 Introduction

Decontamination is defined as the removal of contamination from surfaces of facilities or equipment by washing, heating, chemical or electrochemical action, mechanical cleaning, or other techniques. In decommissioning programs, the objectives of decontamination are to:

- reduce radiation exposure;
- salvage equipment and materials;
- reduce the volume of equipment and materials requiring disposal in licensed burial facilities;
- restore the site and facility, or parts thereof, to an unrestricted-use condition;
- remove loose radioactive contaminants and fix the remaining contamination in place in preparation for protective storage or permanent disposal work activities; and
- reduce the magnitude of the residual radioactive source in a protective storage mode for public health and safety reasons or reduce the protective storage period.

Some form of decontamination is required in any decommissioning program, regardless of the form of the end product. At a minimum, the floor, walls, and external structural surfaces within work areas should be cleaned of loose contamination, and a simple water flush of contaminated systems may be performed. When applicable, nuclear criticality considerations need to be addressed before the use of water. The question will arise, however, of whether to chemically decontaminate piping systems, tanks, and components. A strong case can be made in favor of leaving adherent contamination within piping and components in a dispersed form on the internal metal surfaces rather than concentrating the radioactivity through decontamination. In most cases, decontamination is not sufficiently thorough to allow unrestricted release of the item being treated; therefore, a savings both in occupational exposure and cost could be realized by simply

removing the contaminated system and its components and only performing certain packaging activities (e.g., welding end caps on pipe sections). However, additional cost for the disposal of materials must be weighed in this scenario.

A decontamination program may require a facility capable of processing the chemical solutions by such means as neutralization and precipitation, filtration, evaporation, and demineralization. The concentrated wastes, which represent a more significant radiation source, must be solidified and shipped for burial in licensed burial facilities unless properly treated in the waste reduction/recycling/reclamation processing configuration.[1] Each of these additional activities can increase (1) occupational exposure rates, (2) the potential for a release, and (3) the uptake of radioactive material and could conceivably result in even higher doses than those received from removing, packaging, and shipping the contaminated system without extensive decontamination. Resolution of this question depends on specific facts, such as the strength of the gamma-emitting contamination, the magnitude of the contamination, and the effectiveness of the containing component and piping (wall thickness) in reducing work area radiation fields.

The technology for decontaminating nuclear reactors and accessory equipment is a relatively recent development compared to industrial cleaning, which was initiated in the mid-1920s when industrial equipment and piping systems became too large to be disassembled and cleaned in chemical solvent tanks. Instead, these systems were cleaned by inserting the solvents into the systems, recirculating the solvents, and finally draining the contaminated solvents.

A knowledge of chemical cleaning methodology is a requisite for assessing decontamination technology (Ayers 1970) because most of the procedures and chemicals used to decontaminate nuclear reactors and equipment were used for cleaning in the chemical processing industry. Both chemical cleaning and decontamination require the same areas of knowledge and experience: chemistry of fouling, corrosion technology, and waste development and removal techniques. Furthermore, the same engineering knowledge is required to devise suitable procedures for mixing, pumping, and heating solvents and other chemical-cleaning constituents. Compliance with basic health and safety practices regarding chemical agents and pesticides is required. At a minimum, workers should go through a training program and be equipped with glasses, full-body protective coveralls, impermeable gloves, and foot covers. Additional safety equipment depends on the toxicity of contaminants.

There are two primary categories of decontamination equipment or techniques: chemical and mechanical. Chemical decontamination uses concentrated or dilute solvents in contact with the contaminated item to dissolve either the base metal or the contamination film covering the base metal. Dissolution of the film is intended to be nondestructive to the base metal and is generally used for operating facilities. Dissolution of the base metal should only be considered in a decommissioning program where reuse of the item will never occur. Chemical flushing is

[1]The optimal waste reduction configuration must be defined after an economic assessment of treatment versus transportation/disposal costs has been completed.

recommended for remote decontamination of intact piping systems. Chemical decontamination has also proven to be effective in reducing the radioactivity of large surface areas such as floors and walls as an alternative to partial or complete removal.

Mechanical and manual decontamination are physical techniques. More recently, *mechanical decontamination* has included washing, swabbing, foaming agents, and latex-peelable coatings. Mechanical techniques may also include wet or dry abrasive blasting, grinding of surfaces, and removal of concrete by spalling as discussed in Section 9.3.19. These techniques are most applicable to the decontamination of structural surfaces.

In recent years, many innovative decontamination techniques have been proposed. For the most part, these emerging technologies are hybrid technologies comprised of one or more of the following methods: chemical, electrochemical, biological, mechanical, or sonic methodology. These innovative techniques are described in a separate section (Section 9.5) and are subdivided into categories based on similar characteristics.

## 9.2 Chemical Decontamination

### 9.2.1 Introduction

Chemical reagents are very widely used in the nuclear industry as decontaminants. The objective of chemical decontamination in the nuclear industry is to remove fixed contamination on surfaces of piping, components, equipment, and facilities.

The advantages of chemical decontamination are that it can be used for inaccessible surfaces, it requires fewer workhours, it can decontaminate process equipment and piping in place, and it can usually be performed remotely. Chemical decontamination also produces few airborne hazards, uses chemical agents that are readily available, produces wastes that can be handled remotely, and generally allows the recycling of the wash liquors after further processing.

The disadvantages of chemical decontamination are that it is not usually effective on porous surfaces, it can produce large volumes of waste (although volume may be reduced by a radioactive waste treatment system), it may generate mixed wastes, and it can result in corrosion and safety problems when misapplied. In addition, it requires different reagents for different surfaces; it requires drainage control; for large jobs, it generally requires the construction of chemical storage and collecting equipment; and it requires addressing criticality concerns, where applicable.

Chemical decontamination involves the use of either concentrated or dilute reagents. In general, both the concentrated and dilute processes fall into one of six chemical classifications:

- high-pH oxidation and dissolution,
- high-pH oxidation followed by low-pH dissolution,

- low-pH oxidation and dissolution,
- low-pH oxidation followed by low-pH dissolution,
- low-pH dissolution, and
- low-pH reduction and dissolution (Munson, Divine, and Martin 1983).

An example of the high-pH oxidation and dissolution chemistry is the use of alkaline permanganate (AP), which dissolves chromium oxide and attacks various hard-surface alloys, organics, and copper. The use of AP followed by citric acid or any other acid is an example of high-pH oxidation followed by a low-pH dissolution. In this case, there is some dissolution in the first step, but the major purpose of the AP is to condition the corrosion product film; most of the decontamination occurs with the dilute acid step. These techniques are generally applied to nuclear reactor systems, which operate under reducing conditions. It should be noted that a strong acid can be substituted for a weak acid, if necessary, in a decommissioning program where the equipment will not be reused.

A similar use is made of low-pH oxidation and dissolution. For example, nitric acid can be used as both oxidant and acid, particularly in the removal of uranium oxide fuel debris. A procedure that is similar to the high-pH oxidation and low-pH dissolution process uses nitric acid as a low-pH oxidant followed by Citrox or another acid for a low-pH dissolution step. This process is suitable for the removal of fuel and fission product debris and can be used for corrosion product removal if little or no chromium is present.

Several solutions are available for low-pH dissolution. The best known of these are phosphoric acid and CAN-Decontamination. Inhibited phosphoric acid has been used successfully for many years in the Hanford N-reactor, a primarily carbon steel system. CAN-Decontamination, a dilute solution used on reactor-scale operations in Canada, has also been successful on nuclear reactor components and with an oxidizing pretreatment. Phosphoric acid vaporized with steam has been used for vapor-phase cleaning of isolated components.

Low-pH solutions that are strongly reducing are not common because reactions with water tend to make them unstable. One process developed for high-temperature stainless steel is a reducing decontamination solution that uses hydrazine (Peach and Skeleton 1988).

### 9.2.2 Decontamination Chemistry

Chemical solutions are generally the most effective on nonporous surfaces. Possible decontamination agents are chosen based upon the chemistry of the contaminant, the chemistry of the substrate, and disposal of the waste that will be generated by its use. Because a wide variety of possible decontaminating agents is usually available for each case, other factors such as cost, material corrosion, safety, waste, and support services must also be considered.

Decontamination factors (DFs) are used to determine the effectiveness of the decontaminating agent (e.g., chemical treatment). DFs are usually increased with contact time, concentration, temperature, and agitation. Contact time between the reagent and the surface can range from a few minutes to many hours and even days. Removal of metal oxide layers usually requires several hours of contact. Increasing temperature accelerates the reaction rates; however, some chemical constituents break down at elevated temperatures. At times, several applications of the same reagents are needed, and the surface may need to be flushed upon completion. Consideration should also be given to how long the reagent can be recirculated before a fresh solution is used, because metal hazardous waste ions have a tendency to resettle out of the solution. Chemical decontamination is more effective under turbulent conditions produced by some form of mechanical agitation such as cavitation, hydraulic flow, or scrubbing.

Numerous chemical formulations are possible. Without specific physical and chemical information pertaining to the hazardous species present on a particular type of surface, it is not possible to describe specific chemical reactions. Furthermore, the complete reporting of chemical formulations used most frequently is difficult because some of these are proprietary and sold under a sales descriptor without complete technical information about the ingredients.

For these reasons, this section is arranged to discuss the most frequently used reagents and "family of reagents" in terms of reaction objectives and types of surfaces cleaned.

#### 9.2.2.1 Water/Steam

Water is a universal decontamination agent that acts by dissolving the chemical species or by eroding and flushing loose debris from the surface. It can be used on all nonporous surfaces, and its effectiveness can be enhanced by increasing its temperature, adding a wetting agent and detergent, or using a water jet. Steam is effective partially because of its gas velocity impinging on the surface, and it can be made even more effective with detergents. Steam can be used on any nonporous surface that can withstand the temperature, but it is most useful on accessible surfaces. Steam generally provides better DFs than water for flat-coated or polished surfaces. Dry steam has some application for uncoated concrete.

Most ionic compounds are soluble in water; therefore, water/steam is the first choice for sluicing bulk salts and solids from tanks. For surfaces with grease or oil, it is not effective unless detergents are added. Water is most effective when the contaminant has been in contact with the surface for only a short time.

Water by itself has little effect in removing longstanding contaminants and those that are chemically bonded to the substrate. It has almost no effect on hard metal oxide and carbonate or silicate scales, and it reacts violently with metallic sodium or potassium. Most transition metal compounds have limited solubility in water unless the pH is lowered.

The advantages of using water as a decontaminant are that it is cheap, available, nontoxic, noncorrosive, and compatible with most radioactive waste and RCRA waste systems. In addition,

water/steam requires few support services that are not already available. Because of its safe nature, it can be used in large facility and environmental flushing operations. Remote operations can be accomplished with fire hoses, jets, or steam lances. Most cleaning operations use a water flush before other agents are used. The advantage of using steam is that the volume of water is reduced.

The disadvantages of water as a decontaminant are that large volumes are usually required and contaminants can resettle onto other surfaces. In particular, the use of water has the tendency to spread radioactive contamination, which complicates the control of cleanup. If fissile materials are present, criticality concerns become paramount.

#### 9.2.2.2 Strong Mineral Acids

The strong mineral acids used in decontamination are:

- hydrochloric acid (HCl),
- nitric acid ($HNO_3$),
- sulfuric acid ($H_2SO_4$), and
- phosphoric acid ($H_3PO_4$).

These acids can be used by themselves as dilute solutions, in formulation mixtures with acid salts and other compounds, and in combination with each other—such as $HNO_3$-HCl. Their main purpose is to attack and dissolve metal oxide films and lower the pH of solutions to increase solubility or ion-exchange of metal ions. They can be used on almost all metal surfaces except reactive metals like zinc. The acids work rapidly and very effectively. All the acids are relatively cheap (except phosphoric acid), and all are commonly available industrial compounds.

The advantages of using the strong acids are that they are relatively cheap, quick, and effective. The disadvantages are that they present safety and handling problems, require neutralization before waste treatment, and are incompatible with many materials. Explosive or poisonous gases can be produced in reactions with some compounds.

Typical examples of the effectiveness of using strong acids for decontamination follow.

**Hydrochloric Acid**

Hydrochloric acid (HCl) is one of the first chemical cleaning agents used for utility boilers. It was used in decontaminating the BONUS reactor CrMo steel main steam system and stainless steel purification system in preparation for entombment. A reagent grade solution (10% by volume) was found to be effective at an operating temperature of 70°C. One-inch square samples for testing in the United Nuclear Corporation laboratory were cut from sections of piping

contaminated with Co-60, Co-58, and Zn-65 and small quantities of fission products, including Cs-137. Laboratory testing consisted of 30-min cycles in static tests (soaking) of candidate solutions and then 30-min cycles in dynamic tests (stirred) of solutions. The most effective solutions were given a final dynamic test on larger samples from the reactor systems. Laboratory data indicated HCI decontamination of stainless steel gave repeatable DFs of approximately 10. No inhibitor was used because the systems were not going to be returned to service, and the expected corrosion would not affect the residual radioactivity containment integrity of the systems.

Actual system decontamination at BONUS confirmed the laboratory results. Stainless steel and CrMo systems were decontaminated by a DF of approximately 10 overall. A brief description of the acid-flushing system is included in the discussion of phosphoric acid.

## Nitric Acid

Nitric acid ($HNO_3$) is used for dissolving uranium and its oxides in stainless steel and Inconel systems. A typical solution is 10% by volume at 75°C. However, it cannot be used on carbon steel because of the high corrosion rate. Nitric acid is a strong oxidizing agent; users should have knowledge of its compatibility with materials. Use of nitric acid on incompatible materials has resulted in fires and explosions (in closed systems). Nitric acid is also used at reprocessing plants to dissolve plutonium dioxide, fission products, sludge deposits, and residual contamination from system piping and components. At the Eurochemic reprocessing facility, potassium permanganate ($KMnO_4$) was added to the nitric acid, resulting in the most effective decontaminant of that major decontamination program (Detilleux, et al. 1978). Two similar processes used to decontaminate the cell of the acid recovery evaporator at the Tokai Reprocessing Facility in Japan were general treatment by $HNO_3$ followed by a sodium hydroxide (NaOH) rinse and decontamination of equipment bottoms using a three-stage process [i.e., AP, nitric acid, and ethylenediaminetetraacetic acid (EDTA)].

## Sulfuric Acid

Sulfuric acid ($H_2SO_4$) is an oxidizing agent used to a limited extent for removing deposits that do not contain calcium compounds. This highly corrosive acid is used in dilute form with an inhibitor. The concentrated form has been used for removing organic deposits. Sulfuric acid has not been used extensively as a decontaminating solvent because the DFs are relatively low (Loucks 1970).

## Phosphoric Acid

Phosphoric acid ($H_3PO_4$) rapidly defilms and decontaminates carbon steel surfaces. At 60–70°C, inhibited dilute (10%) phosphoric acid solutions remove 95–99% of the contamination and all visible film in approximately 20 min. In practice, a ferrous phosphate film forms and is deposited on the treated area along with the contamination. The use of phosphates is not recommended when the waste end product will be glass.

Dilute (15 vol%) phosphoric acid was used in decontaminating the BONUS reactor carbon steel and brass piping and components in preparation for entombment. The selection was based on a test program similar to that described for hydrochloric acid. DFs of between 5 and 37 experienced in laboratory tests were generally achieved during actual decontamination flushes. The carbon steel condensate system was passivated using ammonium hydroxide followed by a rust inhibiting rinse.

#### 9.2.2.3 Acid Salts

Salts of various weak and strong acids can sometimes be used in place of the acids themselves, or as a more effective combination with various acids. The most commonly used salts are

- sodium bisulfate ($NaHSO_4$),
- sodium sulfate ($Na_2SO_4$),
- ferric sulfate [$Fe_2(SO_4)_3$],
- ammonium oxalate ($NH_4C_2O_4$),
- ammonium citrate [$(NH_4)_2HC_6H_5O_7$], and
- sodium fluoride (NaF).

The salts can be used in combination with acids or acidic solutions to decontaminate metal surfaces. They work in a manner similar to the acid itself by dissolving or complexing the metal oxide surface, but they also provide free sodium and ammonium ions to replace contaminants at ion-exchange sites. The salts are frequently used in combination with their parent acid and give a better DF than the acid alone. The salts are less corrosive than their parent acid and have fewer material compatibility problems but are generally corrosive enough to require inhibitors. Their application as a single agent is limited with the exception of $NaHSO_4$, which is often used alone for mild decontamination of carbon steel and aluminum.

The advantages of acid salts are that they increase the versatility of acid decontamination, produce less corrosive solutions, and are safer for personnel than the acids. The disadvantages are that the salt solutions still present some corrosion considerations for both equipment and personnel, have limited application without addition of another acid to lower the pH of solution, and are slower acting than the acids.

#### 9.2.2.4 Organic/Weak Acids

The use of weak (organic or inorganic) acids for decontamination is now widespread in the nuclear industry for nondecommissioning activities. The most widely used weak acids include the following (in order of frequency of use):

- oxalic acid ($C_2H_2O_4$),
- citric acid ($C_6H_8O_6$), and
- sulfamic acid ($HSO_3NH_2$).

The weak acids are generally used on metal surfaces and act by dissolving the metal oxide film and sequestering or solubilizing the metal ion. This sequestering or chelating property gives the organic acids a great advantage over the strong mineral acids. The organic acids also are not as corrosive, are less toxic, and have few material compatibility problems. They contain no chloride or fluoride and thus can be used on stainless and high-alloy steels. Stainless steel is almost always cleaned with organic acids, usually oxalic and citric. Plastics and other polymeric compounds can also be cleaned with organic acids.

The organic acids are used extensively on all metal surfaces where reuse or nondestructive cleaning is the objective. They may be used with or without inhibitors, depending on the acid and the conditions. Oxalic, citric, and sulfamic acids are the stronger acids and often are used with inhibitors. The organic acids may be mixed to get the full range of chelating abilities, or they may be matched to the specific surface and contaminant. Oxalic and citric acid mixtures have the greatest general use. Oxidizing agents are often used with the acids to condition the metal so it may be solubilized. Sulfamic acid has the added benefit of being a solid that can be shipped and stored as a dry powder and mixed on site. All of these organic acids are commercially available.

The advantages of the organic acids are their less corrosive nature, their superior safety and handling characteristics, and their double role in dissolving oxide films and sequestering the metal contaminant. Some of the disadvantages are that they are more expensive than some of the strong acids; they react more slowly; although less corrosive than strong acids, they still have some material compatibility and personnel considerations; they can break down at high temperatures; and they require neutralization before treating in a radioactive waste system.

Several examples of the manner in which weak acids have been used are described in the following sections.

## Oxalic Acid

Oxalic acid (OX) is effective for removing rust from iron. It is an excellent complexer for niobium (when present) and fission products.

Oxalic acid was used at the Savannah River Plant in stainless steel heat exchangers. The process consisted of filling the system with water, adding a corrosion inhibitor (2.6 g/l ferric sulfate), steam heating to 70°C, adding oxalic acid to 2 wt%, and recirculating the mixture. The system was then drained, water rinsed, and neutralized with 50% potassium hydroxide. The system was drained and rinsed again with water. DFs of 3–20 were achieved. At temperatures of about

90°C, the oxalic acid reacted with the stainless steel to form a highly insoluble ferrous oxalate film. Subsequent treatment with sulfuric and nitric acid was necessary to remove the precipitate (Carlson et al. 1970).

This acid is used as the second step with AP preconditioning, but because of the precipitate it is not of significant interest. Problems may occur during evaporation when using oxalic acid because of the formation of crystals.

## Oxalate Peroxide

Oxalate peroxide (OPP) is an oxidizing agent consisting of a mixture of oxalic acid and hydrogen peroxide. It is used for the simultaneous dissolution of $UO_2$ and the defilming and decontamination of metals. The oxalic acid decontaminates the surface, and the hydrogen peroxide enhances the decontamination and passivates the steel by its oxidative action. However, the peroxide destroys the oxalic acid, preventing reuse of the solvent. The decontamination is fast enough to be effective before the oxalic acid is destroyed.

Hydrogen peroxide acts as a carbon steel cleaner in concentrations up to 0.2 *M* $H_2O_2$ and then as a passivator at concentrations above 1.0 *M* $H_2O_2$ (Meservey 1970). In tests at ORNL, carbon and stainless steels heated to about 200°C and treated with oxalate peroxide (pH 4) exhibited DFs of 100 to 1,000 or more.

## Citric Acid

A mixture of citric (0.2 *M*) and oxalic (0.3 *M*) acids with a corrosive inhibitor is used as a reducing agent. This process is very effective for decontaminating stainless steel in a two-step process following AP. A typical procedure consists of the following steps:

1. Circulate AP for 2 hr at 105°C.

2. Water rinse until the $[MnO_4]^-$ is completely removed and until pH is less than 10.

3. Circulate dilute (10%) mixture for 2 hr at room temperature.

4. Circulate mixture until the conductivity of the rinse water is less than 50 μmho.

The citrate ions are added to complex the iron ions and inhibit the formation of any precipitate. The dilute mixture neutralizes traces of residual sodium hydroxide (from AP) and dissolves any $MnO_2$ (by reduction to $Mn^{2+}$). This dilute rinse may be eliminated for simple systems without dead-legs or crud traps. The process is not very effective unless preceded by the AP flush (Ayers 1970).

**Sulfamic Acid**

Sulfamic acid with an inhibitor is an effective decontaminant for carbon steel components, providing good DFs with low corrosion rates. Redeposition or film formation does not occur.

Because it is a less reactive reagent, longer contact times may be necessary than with other reagents. Sulfamic acid has not been used extensively in decontaminating reactor carbon steel systems, but it is acknowledged to be an effective decontaminant.

### 9.2.2.5 Alkaline Salts

Caustic compounds are used for decontamination both by themselves and in solutions with other compounds. The primary alkaline salts are:

- potassium hydroxide (KOH),
- sodium hydroxide (NaOH),
- sodium carbonate ($Na_2CO_3$),
- trisodium phosphate ($Na_3PO_4$), and
- ammonium carbonate [$(NH_4)_2CO_3$].

Alkaline salts (i.e., bases) are used to remove grease and oil films, to neutralize acids, as surface passivators, to remove paint and other coatings, as a rust remover for mild steel, as a solvent for species that are soluble at high pH, and as a means of providing the right chemical environment for other agents. As a degreaser, they are normally mixed with detergents, and most commercial detergents contain mild caustic compounds. The strong bases (potassium hydroxide, sodium hydroxide) are frequently mixed in solutions with oxidizing agents [$KMnO_4$ and potassium metaperiodate ($KIO_4$)] and a reducing agent ($NaH_2PO_2$), which are not stable in acid solutions. Alkaline permanganate (NaOH and $KMnO_4$) is a very widely used decontaminating agent for metal surfaces, especially as a first conditioning step for stainless steel. Some important species like iodine are more soluble in alkaline solutions and can be effectively washed from the surface.

The aggressiveness with which these compounds act on paints, coatings, and films can be controlled by using the strong bases (KOH, NaOH) for harsh attack or the weak bases for milder conditions. The alkaline solution softens the paint so that it can be removed by mechanical means. This process is often preferable to completely dissolving the paint because that may contaminate the surface under it. Alkaline solutions may be used on all nonporous surfaces, except aluminum and magnesium, which react to strong bases.

The advantages of using alkaline solutions are that they are cheap, are easy to store, have fewer material problems than acids, and can be applied in the form of gels for ceilings and walls. The

disadvantages include their slow reaction time and their destructive effect on aluminum. In addition, the bases are safety hazards—workers can be burned if they come into contact with them.

### 9.2.2.6 Complexing Agents

A complexing agent is a chemical species that forms a stable complex with a metal ion in two different manners. Those that are preferential form complexes with certain ions and are called *sequestering agents. Chelating agents* are complexing agents that bind the metal at two or more locations. The most common complexing agents used in decontamination are the following:

- EDTA and the monoacid HEDTA,
- organic acids (see Section 9.2.2.4),
- sodium or ammonium salts of the organic acids, and
- nitrilotriacetic acid (NTA).

The complexing agents solubilize certain metal ions and prevent their redeposition out of solution. This is most important since metal ions have a strong affinity for bare metal surfaces. Complexing agents are used with solutions of detergents, acids, or oxidizing agents to dramatically increase the DFs. The ability of the agent to sequester metal ions depends on the specific ion, its oxidation state, and the solution pH.

EDTA works best with most ions, but it is expensive, and its pH range is too high for strong acid solutions used to attack metal oxide layers. EDTA is most often used with detergent, oxidizing agents, or weak acids, and it is noncorrosive and nontoxic. A very effective decontaminating agent for metal surfaces is a mixture of oxalic and citric acid. The metal ion preference of the two complement each other, and the organic acids also act to dissolve the oxide film. EDTA is also used with oxalic/citric acid mixtures. When using the organic acids as complexing agents, the precautions described for organic and weak acids should be considered.

The advantages of using complexing agents are that they increase the DF of most decontaminating agents, can perform dual functions (in the case of the organic acids), and are relatively safe and nontoxic. The disadvantages of EDTA and similar chelating agents are the expense, the limited range, and the effect on some radioactive waste processes like precipitation and ion exchange. Wastes containing EDTA may present a disposal problem. Site waste management should be consulted before using this chemical.

### 9.2.2.7 Oxidizing and Reducing (REDOX) Agents

An oxidizing agent increases the oxidation state of another chemical species, and a reducing agent lowers the oxidation state. A change in oxidation may be beneficial because some

oxidation states are more soluble than others. Frequently, these two classes of chemicals are used jointly to maintain a specified oxidation level. The following oxidizing agents are commonly used in decontamination:

- potassium permanganate ($KMnO_4$),
- potassium dichromate ($K_2Cr_2O_7$), and
- hydrogen peroxide ($H_2O_2$).

Oxidizing agents find extensive application in decontamination by conditioning metal oxide films, dissolving fission product debris, dissolving various chemical species, and oxidizing the metal surface either for protection or corrosion. Many metallic and other compounds either break down or are more soluble in higher oxidation states, and base metals must be oxidized to dissolve them. Most metal surfaces can be treated with oxidizing agents, but conditions must be adjusted to avoid excessive corrosion.

Solutions of AP are used extensively to condition metal oxide films, especially for stainless steel. Because the strong oxy-acids ($HNO_3$, $H_2SO_4$, $H_3PO_4$) are also oxidizing agents, these are usually used alone, but hydrogen peroxide finds application in solutions with the other nonoxidizing acids and salts. Solutions of organic acids and peroxide frequently get superior DFs to those of a strong oxidizing acid but without some of the corrosion and safety problems.

The advantages of using oxidizing agents are that they complement various acid decontamination solutions, allow less corrosive acids or salts to be used, and perform a unique function in the dissolution of many compounds. The disadvantages include some metal corrosive action, violent reactions with some compounds, loose activity during storage, and the need to be neutralized before treating in the radioactive waste system.

Reducing agents alone have limited application for decontamination because metals will plate-out when reduced, and this is usually undesirable. Under specific conditions, reducing agents could be used to protect a metal surface or reduce higher oxidation states for sequestering agents. Possible reducing agents are sodium hypophosphite ($NaHPO_2$) and hydrazine ($N_2H_2$).

Examples of the manner in which this class of chemicals can be used are described in the following sections.

## Alkaline Permanganate

AP is an oxidizing agent used to oxidize chromium in the corrosion film to $Cr_2O_3$, which can subsequently be dissolved in an alkaline solution. It is used as a pretreatment process in multistep decontamination programs to expose the remaining corrosion film matrix to subsequent chemical dissolution (Weed 1970).

## Low Oxidation-State Metal Ion

### Process Description

The low oxidation-state metal ion (LOMI) process was developed by the U.K. Central Electricity Generating Board (CEGB) in the late 1970s (Diercks 1988). The process utilizes $V^{+2}$ ions in the form of vanadium picolinate to reduce $Fe^{+3}$ ions in the corrosion product scale to the more soluble $Fe^{+2}$ state, with the $V^{+2}$ ions being oxidized to $V^{+3}$. The oxidized $V^{+3}$ ions are also formed by the reaction of $V^{+2}$ with oxidizing species formed by the radiolysis of water. Therefore, formic acid is added to the reagent to scavenge these oxidizing radicals through reactions such as the following:

$$OH + HCOO^- \text{ ---> } CO^{-2} + H_2O.$$

The $CO^{-2}$ ion then reduces $V^{+3}$ ions in the solution to regenerate the low oxidation-state $V^{+2}$ ions according to the reaction

$$V^{+3} + CO^{-2} \text{ ---> } V^{+2} + CO_2.$$

Thus, the presence of sufficient formate ions in solution enables the regeneration of the reductant $V^{+2}$ ions.

The LOMI decontamination process is applied in a manner similar to that used for the CAN-Decontamination process. The reactor coolant is first adjusted to neutral pH and a low dissolved-oxygen level and is then brought to a temperature of 80–90°C. The chemical decontamination solution is then injected, and a side stream of circulation coolant is passed through filter and cation exchange resin columns to regenerate the solution on line. Decontamination times are very short—typically on the order of 1–3 hr. A prior preoxidizing AP or nitric acid permanganate (NP) step is required to remove the higher Cr films present on pressurized-water reactor (PWR) components. As with the CAN-Decontamination process, this preoxidization step oxidizes the insoluble $Cr^{+3}$ ions to the soluble $Cr^{+6}$ state, and they are dissolved in the subsequent LOMI treatment.

The first formulation of the LOMI reagent typically contained $2–4 \times 10^{-3}$ *M* $V^{+2}$, $1–2 \times 10^{-3}$ *M* each of picolinic acid and formate ions in thoroughly deoxygenated water, and sufficient sodium hydroxide to adjust the solution pH. This first formulation generated a relatively large amount of radioactive waste from the ion-exchange process, which had to be disposed of. Therefore, a second generation LOMI reagent, containing less formate and sodium hydroxide, has recently been introduced, resulting in a 50% reduction in the amount of ion-exchange resin required for waste cleanup.

The advantages of this process are that it has low corrosion without the use of inhibitor and it reacts rapidly (Bradbury and Williams 1988). The disadvantages are that the reagent is relatively expensive, and it creates a relatively larger volume of waste.

### Applications

The LOMI process is the established decontamination process for the Winfrith SGHWR (U.K.). In 1984, it was used in the decontamination of heat exchangers and recirculation pipe work on the Monticello boiling-water reactor (BWR). Experience to date indicates that this process is an effective method for routine decontamination of BWR piping and fuel (IAEA 1985). It can be applied to decontaminate the structural materials of carbon steel, SS304, SS316, SS321, SS410, Inconel 600, Inconel 800, and Zircaloy 2, etc. (Diercks 1988).

## Electrochemical Low Oxidation-State Metal Ion Exchange

### Process Description

Electrochemical LOMI ion exchange (ELOMIX) (Tucker 1993) is a modification of the LOMI process. The primary objective of ELOMIX is to reduce the volume of waste arising from the LOMI decontamination process. Currently, the resin resulting from the application of the LOMI process is normally managed by solidification in cement-based matrices for shipment to an appropriate disposal location, but this is not desirable as a long-term solution because of the instability of organic media and the cost of long-term disposal. The following are principal features of ELOMIX:

- electrodeposition of metals,
- back-diffusion of nonplating ions,
- continual resin regeneration, and
- compatible chemistry and regeneration of the LOMI solution.

The key element of the ELOMIX process is an electrochemical cell consisting of three compartments: anode, cathode, and resin.

### Applications

The concept of ELOMIX has been in development since May 1989 (Tucker 1993). In October 1990, a small pilot-scale ELOMIX cell was operated at Commonwealth Edison's Dresden Unit 2 on a sidestream of actual decontamination solution. This pilot-scale cell operated successfully during three LOMI steps, processing a total of 33 l of decontamination solution through a resin volume of only 0.2 l.

## DECOHA Process

The DECOHA process combines important chemical processes—metal dissolution in and electrochemical recovery of dissolved metals from a chemical decontamination—into a single

"closed loop" process (Roller et al 1992). Fluoroboric acid ($HBF_4$) is the heart of the DECOHA process. Fluoroboric acid is a commercially available acid produced when gases are washed during aluminum production. Fluoroboric acid's primary decontamination attribute is its electrolytic properties, which are effective over a wide range of chemical conditions. In general, the acid reacts with a metal to produce the corresponding metal-fluoroborate and hydrogen gas:

$$nHBF_4 + Me \text{ ----> } Me(BF_4)n + n/2\ H_2.$$

The $HBF_4$ reacts similarly with metal oxides—generating water rather than hydrogen gas as a reaction end product:

$$nHBF_4 + \text{metal oxide} \text{ ----> } Me(BF_4)n + H_2O.$$

The effectiveness of these reactions depends in large part upon the respective solubilities of the various metals in fluoroboric acid. Experience has confirmed fluoroboric acid as an extremely powerful solvent for metals—iron and other important metals exhibit solubilities close to or greater than 200 g/l in 50% fluoroboric acid, and the pH of the solution is maintained above 4–5 as a result of the formation of the salt of the acid rather than the formation of the free acid.

Using this process, thin layers of the contaminated metal can be removed from the surface of the contaminated object. Consequently, the level of damage to an object and the corresponding amount of waste produced can be minimized through process control, removing only the depth of metal required to achieve the specific objectives of the decontamination.

The DECOHA process is generally applied at temperatures between 30°C and 98°C. Some metals such as carbon steel, zircalloy, and aluminum may be treated at room temperature. However, the stainless steels and nickel alloys require elevated temperatures to produce realistic application times. Basically, the speed of the DECOHA process follows a typical dependency on the temperature—for every 10°C increase in temperature, the reaction requires half as much time to take place. Typical removal rates range from 3–4 μm/hr at 80°C for nickel alloys in 50% solution of fluoroboric acid to 20–25 mm/hr at 21°C for aluminum in a 5% solution of fluoroboric acid solution.

## Chemical Oxidation Reduction Decontamination

In the first step of the chemical oxidation reduction decontamination (CORD) process, permanganic acid is added to the system to oxidate the chromium to the hexavalent state. The decontamination solvent, dicarboxylic acid, is added directly, without the fluid contents of the system having to be replaced. Permanganic ions are reduced to manganous ions by an equivalent concentration of the decontamination solvent. Dissolved metals may be removed by ion exchange in real-time application or by subsequent evaporation of the solvent. This procedure is referred to as one cycle and can be applied several times. It may be applied to oxide films. The operating temperature is around 95°C, and the concentration of chemical does not exceed 3 g/l. An adequate DF is normally achieved after two cycles (Koch and Gruner 1991).

## Pressurized-Water Reactor Oxidative Decontamination

The PWR oxidative decontamination (POD) process is applied as follows (Pick and Segal 1983):

1. Apply NP reagents ($KMnO_4$ at 1.0 g/l and $HNO_3$ at 0.25 g/l) for 5–24 hr, typically 7 hr for PWR oxide.

2. Apply oxalic (at 1.4 g/l) and nitric acid (1.5 g/l) for 0.5–1 hr to destroy the excess permanganate and manganese dioxide.

3. Add oxalic (at 0.45 g/l) and citric acids (0.96 g/l) to dissolve the chromium-depleted oxide, and remove dissolved metals in solution using ion exchange.

In Phase I, the permanganate oxidizes chromium in the oxide to bichromate ions as it reduces to manganese dioxide. There is no pH change in this phase:

$$Cr_2O_3 + 2MnO_4^- + H_2O \text{ ---> } 2HCrO_4^- + 2MnO_2.$$

In Phase II, oxalic and nitric acids are added to destroy the excess permanganate and manganese dioxide:

$$2MnO_4^- + 5H_2C_2O_4 + 6H^+ \text{ ---> } 2Mn^{+2} + 10CO_2 + 8H_2O.$$
$$MnO_2 + H_2C_2O_4 + 2H^+ \text{ ---> } Mn^{+2} + 2CO_2 + 2H_2O.$$

The primary advantage in using oxalic acid is that it imposes no resin requirements and reacts rapidly.

In the final phase of the process, the chromium-depleted oxide, which can be represented by the formula for hematite or nickel ferrite, is dissolved by the addition of oxalic and citric acids. The former may act as either a chelating or a reduction agent towards $Fe^{+3}$. Thus, the reactions that occur are the following:

$$Fe_2O_3 + 6H^+ \text{ ---> } 2Fe^{+3} + 3H_2O.$$
$$Fe_2O_3 + 6H^+ \text{ ----> } 2Fe^{+2} + 3H_2O.$$

The dissolved metal ions in all cases are held in solution as complexes of citrate and/or oxalate.

The DFs on stainless steel range from 4 to 25, with 5–10 being typical values. On Inconel 600, DFs of approximately 2 were obtained.

## Bleaching

### Description of Process

The bleach solution is added in generous amounts to the contaminated surface. The surface is scrubbed for 15–60 s, allowed to stand for about 15 min, and then flushed thoroughly with water. The bleach application and wash can be repeated a second time if necessary.

### Application

Bleach is most effective against chemical agents and liquid pesticide spills. Bleach has been used on metal, wood, and concrete surfaces but is most effective on metallic surfaces. Bleach formulations chemically degrade and detoxify many contaminants, especially pesticides. Chemical degradation rates can be affected by other pre- or postbleach decontamination efforts.

Bleach formulations are normally used in conjunction with other decontamination techniques, most often as a follow-up for detoxifying pesticides on surfaces where a physical procedure did not produce satisfactory results (i.e., did not reach the cleanup goals).

Solid bleach formulations are generally applied as a slurry, which can result in periodic clogging of application equipment. Depending on concentration and composition, bleach slurries may cause corrosion of the application equipment and/or the surfaces being treated.

Various types of bleach formulations have been used as decontaminating agents. Traditionally, calcium hypochlorite has been used, although recently sodium-based bleach formulations have had some application. The various bleaches used include Grades I, II, and III, with >35%, 29–35%, and <29% available chlorine, respectively; supertropical bleach (STB), a British formula containing >30% available chlorine; high test bleach (HTB), which has approximately 42% chlorine content; and liquid household bleach (sodium hypochlorite and sodium hydroxide).

Work is needed to improve the technique for application to porous surfaces and to lessen the corrosive impact of bleach on equipment and building materials.

### 9.2.2.8 Detergents and Surfactants

Most commercial detergents involve some formulation of a detergent (sodium laurel sulfate, sodium oleate, alkyl aryl sulphonate) that also acts as a wetting agent or surfactant, a phosphorous or carbonate salt ($Na_3PO_4$, $Na_2CO_3$), a thickening agent (carboxyl methyl cellulose), and other fillers. EDTA or other complexing agents may also be added. The formulations are numerous and involve foaming or nonfoaming and phosphate or nonphosphate choices. Other surfactants that may be used with the detergent or separately include various sulfonic acid salts, quaternary ammonium salts, and nonionic alcohol or amine polymers. Detergents are used in decontamination to remove grease, dirt, and certain organic materials. Surfactants produce similar results by lowering liquid surface tension and providing better contact between the surface

and the liquid. Detergents are effective, mild, all-purpose cleaners for all facility surfaces, equipment, clothes, and glassware. Where applicable, they are preferable to harsher methods. They can be used to increase the effect of water, steam, solvents, and complexing agents. Effectiveness is increased by mechanical agitation. Detergents are not effective on metal corrosion and longstanding contamination.

Detergents are cheap, available, safe, and have few materials-handling problems. The disadvantages of detergents are their limited effect and possible foaming or ammonia release in a radioactive waste system.

Surfactants are used as wetting agents, detergents, and emulsifiers. They typically consist of long carbon-to-carbon skeletons plus a polar group containing atoms of nitrogen, oxygen, or sulfur. Because the polar group is hydrophilic (water-loving) and the hydrocarbon part is hydrophobic (water-hating), these molecules (or ions) tend to migrate to water-oil interfaces where the polar group is attracted to the water phase and the hydrocarbon residue remains in the oil phase.

#### 9.2.2.9 Organic Solvents

Solvents are used in decontamination for removing organic materials, grease, wax, oil, and paint from surfaces and for cleaning clothes (dry cleaning). Some typical organic solvents are:

- kerosene,
- 1,1,1-trichloroethane,
- trichloroethylene,
- xylene,
- petroleum ethers, and
- alcohols.

Dry cleaning of PPE and rubberized articles has some advantage over detergents in that a much smaller volume of waste is produced. Moreover, dry cleaning in many cases is just as or more effective than water cleaning. In general, the wastes produced include a sludge and a small amount of trichloroethane solvent. The disadvantages of dry cleaning are that it is limited to certain materials (e.g., plastics must normally be avoided), it gives poor results with wet items or aqueous-soluble stains, and there can be some cross contamination as the solvent is reused. The use of some organic solvents may produce a mixed waste because of flammability.

For other applications, the solvents are used to dissolve certain organic materials from surfaces. Because of their flammability and their potentially toxic vapors, they are best used on small areas or in contained systems. Some solvents contain chlorine, which is normally avoided in stainless

steel systems. Most radioactive waste systems cannot handle organic solvents. Where other solvents such as alkali or detergents can be used, organic solvents are normally avoided. Conversely, in situations where organic solvents can be properly handled, these solvents are most effective in the decontamination of many RCRA/CERCLA organic constituents.

### 9.2.3 Multiphase Treatment Processes

#### 9.2.3.1 Alkaline Permanganate Processing

AP is normally used as the pretreatment in a multistep process. The AP solution usually includes an inhibitor and a wetting agent to reduce surface tension. Permanganate is also sometimes used in an acid form as NP for similar application. Other examples of the manner in which AP is used in multiphase processing are described below.

**Alkaline Permanganate followed by Ammonium Citrate**

Ammonium citrate (AC) has been successfully used with an AP pretreatment (referred to as *APAC*) to achieve significant decontamination results. This is a two-step process with intermediate water rinsing. In dilute form, the AC removes residual $MnO_2$ from the AP solution and neutralizes that solution. In concentrated form, the AC attacks the remaining corrosion film. However, redeposition has been a significant problem with this process.

**Applications**

This process is widely used to decontaminate stainless steel and carbon steel. A dilute APAC process was used to decontaminate the PWR at Shippingport.

A major disadvantage of the APAC procedure that was discovered during its use at Shippingport is the necessity of switching from alkaline to acid conditions between stages, a switch that led to a requirement for extensive rinses. An additional problem is that the AP solution degraded ion-exchange resins. Tests on various resins and AP concentrations at Brookhaven National Laboratory (BNL) showed that if the solutions were cooled from their normal operating temperature of >80°C to room temperature, the concentration of AP was reduced sufficiently by being removed in an ion-exchange resin unit. However, at these low concentrations the reagent was less effective in removing chromium from PWR oxides (Pick and Segal 1983).

**Waste Processing**

The liquid waste can be deionized using mixed-bed demineralizers, and the resins are disposed of as solid waste. The resin volume is the same order of magnitude as the system volume to be decontaminated. The decontamination solution can be recycled for further use.

## Alkaline Permanganate Ammonium Citrate with Ethylenediaminetetraacetic Acid

### Process Description

EDTA can be added to the ammonium citrate in the APAC process to react with the ion oxides in solution and keep them in solution (referred to as *APACE*). This inhibits redeposition of the contamination on the treated surface as it permits the oxides to be removed in the waste processing step via demineralization. Process usage parameters are the same as APAC with the addition of about 1.0 g/l EDTA.

### Waste Processing

The liquid waste can be deionized using mixed-bed demineralizers, and the resins are disposed of as solid waste. The resin volume is the same order of magnitude as the system volume to be decontaminated. The decontamination solution can be recycled for further use.

## Alkaline Permanganate with Citric Acid

### Process Description

AP with citric acid is a mixture of oxalic acid, citric acid, and an inhibitor. It is an effective decontaminant for stainless steel as the second step after AP pretreatment. The citric acid neutralizes any traces of the alkaline solution, dissolves any manganese oxide ($MnO_2$), and complexes the iron oxides to keep them in solution and retard redeposition.

This process is highly corrosive to carbon steel and 400 series stainless steels. Accordingly, in decontamination, its use is confined to 300 series stainless steels and Inconel (Peach and Skeleton 1988).

### Waste Processing

The liquid waste can be deionized using mixed-bed demineralizers, and the resins are disposed of as solid waste. The resin volume is the same order of magnitude as the system volume to be decontaminated.

## Alkaline Permanganate with Sulfamic Acid

### Process Description

This two-step process is similar to the AP with citric acid techniques. AP with sulfamic acid ($NH_2SO_3H$) (APSul) is effective in removing the contaminated film from stainless steel piping without forming a precipitate or causing redeposition.

### Waste Processing

The liquid waste can be deionized using mixed-bed demineralizers, and the resins are disposed of as solid waste. The resin volume is the same order of magnitude as the system volume to be decontaminated.

### Alkaline Permanganate with Oxalic Acid

### Process Description

This two-step process has been successful in removing aged films on high-temperature stainless steel water piping, but it has the disadvantage of causing redeposition in the form of a tenacious oxalate film on the base metal, which has required further treatment with the APACE process.

### Waste Processing

The liquid waste can be deionized using mixed-bed demineralizers, and the resins are disposed of as solid waste. The resin volume is within the same order of magnitude as the system volume to be decontaminated.

### 9.2.3.2 Selection of Chemical Decontamination Processes

When selecting a suitable decontamination process, several criteria must be considered in a detailed analysis based on site-specific conditions. Most of the criteria are related to the specific features of a nuclear installation (Koch and Gruner 1991, IAEA 1988), such as the following:

- location of the contamination (e.g., inner versus outer surfaces of closed fluid systems);
- materials (e.g., steel, concrete);
- history of operation (to determine contamination strata profile);
- nature of the contamination (e.g., oxide, crud, particulate, sludge);
- effectiveness of previously used chemical decontamination processes;
- distribution of contamination (e.g., surface, cracks, homogeneous distribution in bulk material);
- exposure to human health and the environment;
- safety, environmental, and social issues;

- exposure-level reduction requirements, (e.g., recycling versus disposal);
- quantity and type of secondary waste from decontamination and conditioning;
- ultimate placement of decontaminated materials;
- time; and
- cost.

Table 9.1 lists the chemical decontamination applications for metal materials.

### 9.2.4 Foam Decontamination

#### 9.2.4.1 Process Description

These cleaning agents use foam such as that produced by detergents and wetting agents as a carrier of chemical decontamination agents. They can be applied in a thin layer to a surface in any orientation, even to overhead surfaces. The foam decontamination method can effectively decontaminate metallic walls and parts of complex components. By increasing dwell time, the foam better exploits the capability of the decontamination agent. Surfactants in the foaming agent enhance the effect by increasing contact with the surface.

The advantages of this process are that it is effective for large components with complex shapes, it is a good process for internal in situ decontamination to eliminate smearable contamination before dismantlement, and it produces a low final waste volume. In addition, the process is readily applied using remote operations, it is a well-developed and widely used process, it can be operated by recirculation to improve its effectiveness, and it reduces operator exposure to and potential uptake of the acid.

The disadvantages are that it is difficult to obtain a good DF using a one-time application (batch process), it is difficult to recirculate when it is used to fill large cavities, and it is not appropriate for use on cracked surfaces or where there are deep or convoluted crevices.

#### 9.2.4.2 Applications

This process is well developed and widely used in the nuclear industry. It has been developed at DOE's Savannah River Site as a waste minimization tool (Guthrie 1993). Previous experience with foam decontaminants has shown a significant waste reduction of up to 70%, which is higher than that achieved with current decontamination methods. This process has been tested to decontaminate a series of large valves with complex internal configurations (Courtois et al. 1991). The foam decontamination process also has been applied to contaminated walls at the West Valley Demonstration Project (Meigs 1987). In this instance, results indicated that

## Table 9.1. Chemical Decontamination Applications for Metallic Materials

| CHEMICAL REAGENTS AND PROCESSES | TREATMENT PROCEDURES | METALLIC MATERIALS | | | | | COMMENTS |
|---|---|---|---|---|---|---|---|
| | | Stainless Steel | Carbon Steel | Copper Alloys | Inconel | Aluminum Alloy | |
| AP | Alkaline | Noncorrosive | Mildly corrosive | | | | Usually used as a pretreatment in multistep process. AP includes inhibitor and wetting agent, oxides $Cr^{+3}$ to $Cr^{+6}$ (more soluble). |
| NP | Nitric acid and permanganate pretreatment | | | | | | |
| APAC | AP then rinse then ammonium citrate | Noncorrosive; removes remaining corrosion film after AP treatment. | Highly corrosive; attacks base metals. | | | | AC attacks the corrosion film remaining after AP. Corrosion to carbon steel. Redeposition can be a significant problem. |
| APACE | AP then rinse then ammonium citrate plus EDTA | Noncorrosive | Attacks base metal. | | | | Addition of EDTA improves the process and prevents redeposition of contamination. |
| AP Citrox | AP then rinse then mixture of citric and oxalic acids | Noncorrosive | Noncorrosive | | Citrox removes corrosion film. | | Citrox step used to remove remaining residual $MnO_2$. |

## Table 9.1. Chemical Decontamination Applications for Metallic Materials

| CHEMICAL REAGENTS AND PROCESSES | TREATMENT PROCEDURES | METALLIC MATERIALS | | | | | COMMENTS |
|---|---|---|---|---|---|---|---|
| | | Stainless Steel | Carbon Steel | Copper Alloys | Inconel | Aluminum Alloy | |
| APSul | AP then rinse then sulfamic acid | Noncorrosive | Noncorrosive | | Noncorrosive | | Sulfamic acid step prevents formation of precipitation, thus preventing redeposition. |
| APOX | AP then oxalic acid | Noncorrosive | Corrosive | | | | Oxalic acid used to remove remaining $MnO_2$ corrosive film. Potentially forms insoluble precipitate that redeposits and reduces effectiveness. |
| Hydrochloric acid | One step, with 100 g/l concentration in water | Corrosive | Corrosive | Noncorrosive | | | Very aggressive process. Corrosive to stainless and carbon steels. |
| Oxalic acid | Generally, one step with 100 g/l concentration in water | Noncorrosive | | Attacks base metal. | | | Effective for removing rust. Reacts with steel to form highly insoluble ferrous oxalate precipitate. |
| Nitric acid | One step with 100 g/l concentration in water | Noncorrosive | Attacks base metals. | Attacks base metals. | | Noncorrosive | Addition of 0.1% hydrofluoric acid improves the DF. |

## Table 9.1. Chemical Decontamination Applications for Metallic Materials

| CHEMICAL REAGENTS AND PROCESSES | TREATMENT PROCEDURES | METALLIC MATERIALS | | | | | COMMENTS |
|---|---|---|---|---|---|---|---|
| | | Stainless Steel | Carbon Steel | Copper Alloys | Inconel | Aluminum Alloy | |
| Sulfuric acid | One step with 100 g/l concentration in water | Highly corrosive | Highly corrosive | | | | Highly corrosive |
| Oxalic peroxide | One step with 2 g/l oxalic acid and 5 g/l $H_2O_2$ | Noncorrosive | Noncorrosive | Attacks base metals. | Noncorrosive | Noncorrosive | Mainly used to remove uranium, uranium oxide, and plutonium films. |
| Phosphoric acid | One step with 100 g/l $H_3PO_4$ in water | | Corrosive | Noncorrosive | | | May cause redeposition if left in system too long. |
| Sulfamic acid | One step with 90 g/l sulfamic acid in water | | Noncorrosive | Noncorrosive | | Noncorrosive | Not as active as phosphoric acid, but redeposition does not occur. |

centralized decontamination facility on site in which one or more of these techniques may be used. Such a facility could then be used to decontaminate dismantled or segmented components.

Surface-removal techniques are used when future land-use scenarios include reuse or when it is impractical to demolish the building (e.g., a laboratory within a building). The techniques described in this chapter remove various depths of surface contamination (e.g., floors versus walls) and may be used to reduce the amount of contaminant to be disposed of. For example, if a contaminated building is demolished, all the debris is considered contaminated and requires special handling. However, by first using a surface-removal technique, the volume of contaminant is limited to the removed surface material. The eventual demolition can then be handled in a more conventional manner. In this instance, a cost-benefit analysis should be prepared that considers such potential concerns as packaging, shipping, and burial costs for a surface-removal technique versus conventional demolition and disposal.

Before any surface-cleaning or -removal activity, surface preparation and safety precautions are required. All surfaces to be treated must be free of obstructions (e.g., piping and supports should be dismantled or segmented), and surfaces should be washed down to minimize the release of airborne contamination during the surface-removal technique. The wash liquor must be processed as contaminated waste because it contains materials from the contaminated surface being washed. Moreover, caution should be used to prevent explosions from occurring when treating an area that is highly contaminated with combustibles. In this instance, all combustibles should be neutralized, stabilized, or removed. Finally, the contaminated debris (i.e., the removed portion of surface) must be collected, treated, and/or disposed of, and any liquids used during the removal process, either as part of the process or as a dust control, must be processed/recycled. In cases in which a contaminant has penetrated the material beyond the surface layer, another treatment may be required. Most of the surface-removal techniques usually leave an undesirable surface finish. If a smoothly finished surface is required (i.e., if the building is to be reused), a concrete cap or some other surface-smoothing treatment must be applied. The applications, advantages, and disadvantages of each decontamination technique are presented in Table 9.2.

### 9.3.1 Flushing with Water

#### 9.3.1.1 Description of Technique

This technique involves flooding a surface with hot water. The hot water dissolves the contaminants, and the resulting wastewater is pushed to a central collection area. This technique is usually performed after scrubbing, especially on floors. Squeegees can be used to force the wastewater to the collection area. This technique may be used with detergents or other chemicals that enhance the effectiveness of the technique.

The volume of the wastewater can be reduced by simply wetting the surface and flushing before drying occurs. The volume of wastewater can also be reduced by using a water treatment system to recycle the flush water (Wood, Irving, and Allen 1992; IAEA 1988; MMES 1993).

# Table 9.2. Decontamination Technology

**LEGEND**

| APPLICATIONS | ADVANTAGES | DISADVANTAGES |
|---|---|---|
| ○ Marginally Effective | ○ Marginally Advantageous | x Disadvantageous |
| ● Highly Effective | ● Highly Advantageous | xx Highly Disadvantageous |

* Not Including chemical

**TECHNIQUES**

| | FLUSHING WITH WATER | DUSTING/WIPING/SCRUBBING | VACUUMING | FIXATIVE STABILIZER COATINGS | TURBULATOR | METAL-BASED PAINT REMOVAL | STRIPPABLE COATINGS | STEAM CLEANING | SPONGE BLASTING | $CO_2$ BLASTING | WET ICE BLASTING | HYDROBLASTING |
|---|---|---|---|---|---|---|---|---|---|---|---|---|
| Section | 9.3.1 | 9.3.2 | 9.3.2 | 9.3.3 | 9.3.4 | 9.3.5 | 9.3.6 | 9.3.7 | 9.3.8 | 9.3.9 | 9.3.10 | 9.3.11 |
| Surface Cleaning (C) or Surface Removal (R) | C | C | C | C | C | C | C | C | C | C | C | R |
| Batch (B) or In-Situ (I) | I | I | I | I | B | I | I | I | I | I | I | I |
| **APPLICATIONS** | | | | | | | | | | | | |
| Loose Particulate Contamination | ○ | ● | ● | ○ | ● | ○ | ● | ● | ● | ● | ○ | ○ |
| Bare and Painted Concrete | ○ | ○ | ○ | ○ | | ○ | ○ | ○ | ● | ○ | ○ | ● |
| Metal Surfaces | ○ | ○ | ○ | ○ | ○ | ● | ○ | ○ | ● | ● | ● | ● |
| Components Of All Sizes | ○ | ○ | ○ | ○ | | ○ | ○ | ● | ● | ● | ● | ● |
| Pipe and Tank Internals | ● | ○ | | ○ | | | | | | | | ● |
| Embedded Material and Some Oxide Surfaces | | ○ | | ○ | | | ○ | ○ | | | | ● |
| Small Hand Tools | ○ | ○ | | | ● | | | | | | | |
| Special Equipment (e.g., Motors) | | | ● | | ○ | | | | ● | ● | | ○ |
| Soil, Groundwater and Oily Wastewater | | | | | | | | | | | | |
| **ADVANTAGES** | | | | | | | | | | | | |
| Easy To Apply | ● | ● | ● | ● | ○ | | ● | ○ | ○ | ○ | ○ | ○ |
| Readily Available | ● | ● | ● | ○ | | ○ | ● | ○ | | ○ | ○ | ○ |
| Easy Waste Handling / Disposal | ○ | ○ | ● | ● | | ● | ○ | | | ○ | ● | |
| Little Or No Surface Damage | ● | ● | ● | ● | ● | ○ | ● | ● | ● | ○ | ○ | |
| Easy To Train Operators | ● | ● | ● | ● | ○ | ● | ● | ○ | ○ | ○ | ○ | ○ |
| Remote Operation Possible Or Available | ● | | ○ | ○ | | | | ● | ● | ● | ● | ● |
| Can Penetrate Crevices | | | | ○ | | | ○ | ○ | | | | ● |
| Can Be Applied Wet Or Dry | | ● | ● | | | | | | ● | | | |
| **DISADVANTAGES** | | | | | | | | | | | | |
| Difficult To Remove Contamination From Crevices | x | xx | | | | xx | x | | | | | |
| Cross Contamination Potential | x | | | x | | x | | x | x | x | x | x |
| Personnel Exposure Could Be High | x | x | x | | | x | x | | | | | |
| Labor Intensive | x | xx | x | x | | xx | xx | x | x | x | x | |
| Solvents and Detergents Could Complicate Waste Management | x | x | | | x | x | x | | | | | x |
| Could Produce Increased Volumes of Wastes Unless Recycling Possible | xx | | | | x | | | | x | | | x |
| Possiblity of Excessive Erosion or Surface Roughening | | | | | | | | | | | | x |
| Contamination Not Removed | | | | xx | | | | | | | | |

# Table 9.2. Decontamination Technology (Continued)

**LEGEND**

| APPLICATIONS | ADVANTAGES | DISADVANTAGES |
|---|---|---|
| ○ Marginally Effective | ○ Marginally Advantageous | x Disadvantageous |
| ● Highly Effective | ● Highly Advantageous | xx Highly Disadvantageous |

* Not including chemical

**TECHNIQUES**

| | | ULTRA HIGH PRESSURE WATER | SHOT BLASTING | WET ABRASIVE CLEANING | GRITBLASTING | GRINDING | SCARIFIER | MILLING | DRILL and SPALL | PAVING BREAKER / CHIPPING HAMMER | EXPANSIVE GROUT |
|---|---|---|---|---|---|---|---|---|---|---|---|
| | Section | 9.3.12 | 9.3.13 | 9.3.14 | 9.3.15 | 9.3.16 | 9.3.17 | 9.3.18 | 9.3.19 | 9.3.20 | 9.3.21 |
| | Surface Cleaning (C) or Surface Removal (R) | R | R | C | R | R | R | R | R | R | R |
| | Batch (B) or In-Situ (I) | I | I | B | I | I | I | B/I | I | I | I |
| APPLICATIONS | Loose Particulate Contamination | ○ | ○ | ● | ○ | ○ | ○ | ○ | ○ | ○ | ○ |
| | Bare and Painted Concrete | ● | ● | | ● | ● | ● | ● | ● | ● | ● |
| | Metal Surfaces | ● | ○ | ● | ● | | ● | ● | | | |
| | Components Of All Sizes | ● | | ● | ● | | ○ | | | | |
| | Pipe and Tank Internals | ● | | | ● | | | | | | |
| | Embedded Material and Some Oxide Surfaces | ● | | | ● | ○ | ○ | ○ | ● | ● | ● |
| | Small Hand Tools | | | ● | | | | | | | |
| | Special Equipment (e.g., Motors) | | | ○ | | | | | | | |
| | Soil, Groundwater and Oily Wastewater | | | | | | | | | | |
| ADVANTAGES | Easy To Apply | ○ | ○ | ○ | ○ | ○ | ○ | ○ | ○ | ○ | ○ |
| | Readily Available | ○ | | | ● | | ● | | | ● | |
| | Easy Waste Handling / Disposal | | | | | ○ | ○ | ○ | ○ | ○ | ○ |
| | Little Or No Surface Damage | | | | | | | | | | |
| | Easy To Train Operators | ○ | ○ | ○ | ○ | ○ | ○ | ○ | ○ | ● | ○ |
| | Remote Operation Possible Or Available | ● | ● | ○ | ● | ● | ● | | | | |
| | Can Penetrate Crevices | ● | | | | | | | | ● | ○ |
| | Can Be Applied Wet Or Dry | | | | ● | | | | | | |
| DISADVANTAGES | Difficult To Remove Contamination From Crevices | | | | | | | | | | |
| | Cross Contamination Potential | x | x | | x | x | x | x | x | x | |
| | Personnel Exposure Could Be High | | | | | | | | | x | |
| | Labor Intensive | | | | | | | | x | x | x |
| | Solvents and Detergents Could Complicate Waste Management | x | | x | | | | | | | |
| | Could Produce Increased Volumes of Wastes Unless Recycling Possible | x | | | x | | | | | | |
| | Possiblity of Excessive Erosion or Surface Roughening | x | x | | x | x | x | x | x | x | x |
| | Contamination Not Removed | | | | | | | | | | |

# Table 9.2. Decontamination Technology (Continued)

**LEGEND**

| APPLICATIONS | ADVANTAGES | DISADVANTAGES |
|---|---|---|
| ○ Marginally Effective | ○ Marginally Advantageous | x Disadvantageous |
| ● Highly Effective | ● Highly Advantageous | xx Highly Disadvantageous |

* Not Including chemical

**TECHNIQUES**

| | ELECTROPOLISHING | ULTRASONIC CLEANING | VIBRATORY FINISHING | LIGHT ABLATION | MICROWAVE SCABBLING | FLAMING | FLAME SCARIFYING | PLASMA TORCH | ELECTRICAL RESISTANCE | MICROBIAL DEGRADATION |
|---|---|---|---|---|---|---|---|---|---|---|
| Section | 9.4.1 | 9.4.2 | 9.4.3 | 9.5.1 | 9.5.2 | 9.5.3 | 9.5.4 | 9.5.5 | 9.5.6 | 9.5.7 |
| Surface Cleaning (C) or Surface Removal (R) | C | C | C | C | R | C | R | C | R | C |
| Batch (B) or In-Situ (I) | B | B | B | I | I | I | I | I | I | I/B |
| **APPLICATIONS** | | | | | | | | | | |
| Loose Particulate Contamination | ● | ● | ● | ● | | | | | | |
| Bare and Painted Concrete | | | | ● | ● | ● | ● | ● | ● | |
| Metal Surfaces | ● | ● | ● | | | | | | | |
| Components Of All Sizes | ○ | | | | | | | | | |
| Pipe and Tank Internals | ○ | | | | | | | | | |
| Embedded Material and Some Oxide Surfaces | ● | | | | | | | | | |
| Small Hand Tools | ● | ● | ● | | | | | | | |
| Special Equipment (e.g., Motors) | ○ | ○ | | | | | | | | |
| Soil, Groundwater and Oily Wastewater | | | | | | | | | | ● |
| **ADVANTAGES** | | | | | | | | | | |
| Easy To Apply | | ○ | ○ | | | | | | | |
| Readily Available | ○ | ● | | | | | | | | |
| Easy Waste Handling / Disposal | | | | | | | | | | |
| Little Or No Surface Damage | ○(1) | ● | ● | | | | | | | |
| Easy To Train Operators | | ○ | ○ | | | | | | | |
| Remote Operation Possible Or Available | ○ | | | | | | | | | |
| Can Penetrate Crevices | ○ | ○ | | | | | | | | |
| Can Be Applied Wet Or Dry | | | | | | | | | | |
| **DISADVANTAGES** | | | | | | | | | | |
| Difficult To Remove Contamination From Crevices | | | | | | | | | | |
| Cross Contamination Potential | | | | | | | | | | |
| Personnel Exposure Could Be High | | | | | | | | | | |
| Labor Intensive | | | | | | | | | | |
| Solvents and Detergents Could Complicate Waste Management | x | x | x | | | | | | | |
| Could Produce Increased Volumes of Wastes Unless Recycling Possible | x | x | x | | | | | | | |
| Possiblity of Excessive Erosion or Surface Roughening | x(1) | | | | | | | | | |
| Contamination Not Removed | | | | | | | | | | |

(1) Depending on length of operation, voltage and substrate material, polishing or etching may be achieved.

#### 9.3.1.2 Applications

This process can be used for areas that are too large for wiping or scrubbing. It is effective on loosely deposited particles (e.g., resins) and readily soluble contaminants, and it can be used as a first step to prepare a surface for a more aggressive decontamination. It is not recommended for fixed, nonsoluble contamination. In addition, nuclear criticality considerations must be addressed when using water containing SNM.

### 9.3.2 Dusting/Vacuuming/Wiping/Scrubbing

#### 9.3.2.1 Description of Technique

These techniques refer to physical removal of dust and particles from building and equipment surfaces by common cleaning techniques. If the dust and particles are contaminated, PPE may be required for workers as a health and safety control.

Vacuuming is performed using a commercial or industrial vacuum equipped with a high-efficiency particulate air (HEPA) filter. If a wet vacuum is used to pick up liquids, however, a replacement filter system will have to be used because HEPA filters do not function properly with liquids (i.e., they clog).

Surfaces that cannot be reached with a vacuum can be wiped with a damp cloth or wipe (soaked with water or solvent) to remove dust. If required, the cloth or wipe is disposed of as contaminated waste.

Scrubbing is similar to dusting/wiping except that pressure is applied to assist in removing of loosely adhering contamination.

#### 9.3.2.2 Applications

The dusting and vacuuming techniques are applicable to various types of contamination, including lead-based paint chips, PCBs, and asbestos. The techniques are applicable to facility surfaces, although scrubbing should not be used on porous or absorbent materials because loosely deposited materials may be pushed deeper into the surface and should not be used when contaminants are not soluble in water. Wastes are contained in vacuum cleaner bags, wipe cloths, scrub brushes, or mops and, depending on the nature of contamination, may need to be containerized or otherwise treated before they are disposed of. All of these techniques are best suited for smooth surfaces.

Several considerations must be addressed before these techniques are applied. The wiping technique can be used to remove dust generated from other operations. Fugitive dusts may be created by the dusting or vacuuming action and spread contamination. It is important to remember that if the source of the contaminated particulates is exterior to the work area interior vacuuming or dusting efforts may be ineffective until the external source is controlled. Thermal

effects need to be considered when collecting fissile materials (i.e., Pu-238) while using these techniques. (Esposito et al. 1985; Wood, Irving, and Allen 1992; IAEA 1988).

### 9.3.3 Fixative/Stabilizer Coatings

#### 9.3.3.1 Description of Technique

Various agents can be used as coatings on contaminated residues to fix or stabilize the contaminant in place and decrease or eliminate exposure hazards. No removal of contaminants is achieved. Potentially useful stabilizing agents include molten and solid waxes, carbowaxes (polyoxyethylene glycol), organic dyes, epoxy paint films, and polyester resins. The stabilized contaminants can be left in place or removed by a secondary treatment. In some cases, the stabilizer/fixative coating is applied in place to desensitize a contaminant (e.g., an explosive residue) and prevent reaction or ignition during some other phase of dismantling or demolition.

In general, coatings can be applied in one of two ways: in a water-based solution or a solvent-based solution. Either solution contains a wetting agent that serves to break the surface tension between the fine particles (<20 μm) and the water or solvent. The ensuing chemical reactions allow the coating to dry and harden. Several applications of a solution may be required depending on site-specific conditions.

In practice, hazards posed by solvent flammability and toxicity should be considered. Proper PPE is required during application of the coating and will vary with the type of solvent used and the contaminant(s) of interest.

#### 9.3.3.2 Applications

Coatings as fixatives or stabilizers may be used on PCB, explosive, and radioactive contamination. Stabilizers are used to reduce the potential spread of contamination and ingestion of radioactive contamination at nuclear facilities. In practice, stabilization is achieved using an agent that is complementary to the contaminant(s) of interest and the site-specific work conditions. For example, if the contamination needs to be stabilized and then removed, a wax can be used in conjunction with a solvent or a reactant to dissolve or decompose the contamination. The wax-bearing treatment is allowed to first work and then harden, creating a contaminant-laden wax that can be physically removed in a stripping technique. The maximum DF achieved by this technique, as measured by ambient air levels, is 2–3, depending on the fixative or stabilizer used. In general, experiments to ensure the effectiveness of the stabilizer or fixative need to be performed before one is selected because the degree of immobilization or desensitization required can vary on a site-specific basis.

### 9.3.4 Turbulator

#### 9.3.4.1 Description of Technique

A turbulator is a large tank with propellers that direct the flow of a cleaning solution across a component. Square tanks have two propellers that face each other on opposite walls of the tank. Rectangular tanks, available on special order, have four propellers that are situated at 90° angles around the tank. Figure 9.1 is a schematic of a typical square-tank turbulator assembly and the different flow patterns that are generated. The flow-pattern cycles automatically change, which ensures that the solution is pushed across all surfaces. Each flow-pattern cycle may be varied by simply adjusting the timer setting. In this manner, the more heavily contaminated or more inaccessible components can receive the maximum agitation required. At any given time, each of the propellers is used; only the direction of flow changes. This technique is similar to ultrasonics in that the agitation helps move the cleaning solution across the contaminated surfaces.

#### 9.3.4.2 Applications

This technique is best suited for components with nonfixed contamination (i.e., loosely deposited, loosely adhering contamination). Nonfixed contamination is generally found on such components as metallic hand tools, pump seals and pistons, valves, seal-injection filters and other filters, and control-drive mechanisms. For example, pressurizer valves, pump seals, and code relief valves have been decontaminated using this technique. The turbulator may not be quite as effective as ultrasonics on porous materials or those materials with cracks or crevices. The limited size of the turbulator determines the size of components that can be decontaminated. To control potential exposures to contamination, it is recommended that the cleaning solution be closely monitored and/or treated before it is recycled (Esposito et al. 1985; Turco Products).

### 9.3.5 Metal-Based Paint Removal

#### 9.3.5.1 Description of Technique

Metals such as lead, cadmium, chromium, and mercury have been used as ingredients in paints used to coat the interior surfaces of buildings. In some instances these paints, especially lead, may still be used to coat piping and other metallic structures or components. With age, these paints can crack and peel, creating a potential health hazard to building occupants or to workers involved in demolition activities. If decontamination of any such surface is required, use of paint removal techniques may be necessary.

In practice, a controlled area is initially established that surrounds the areas to be decontaminated, and a plastic ground cover is placed beneath the working area. Peeling paint is then removed from surfaces through a combination of commercial paint removers, hand scraping, water washing, and detergent scrubbing. This combination of removal methods should allow all surface areas of a building to be reached and affected. Any paint wastes accumulate on the plastic

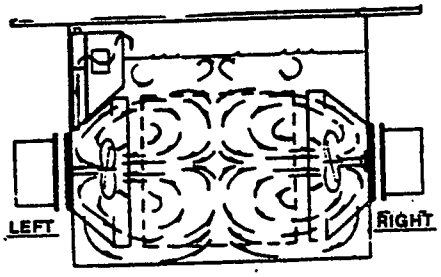


**FLOW PATTERN No. 1**
Reverse Rotation of Left Side Propeller in Flow Pattern No. 4 to Obtain Pattern No. 1. Left & Right Side Propellers Rotating to Pull Solution from Center of Tank.

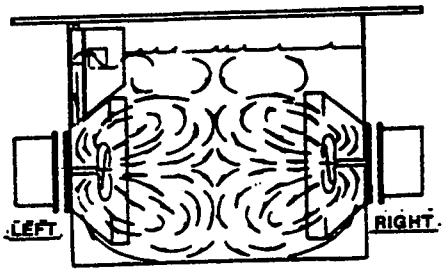


**FLOW PATTERN No. 3**
Reverse Rotation of Left Side Propeller in Pattern No. 2.

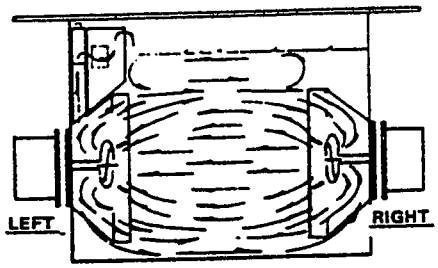


**FLOW PATTERN No. 2**
Reverse Rotation Right Side Propeller in Pattern No. 1.

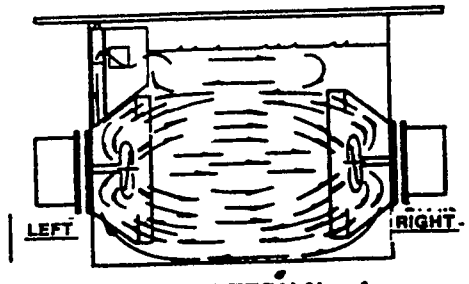


**FLOW PATTERN No. 4**
Reverse Rotation of Right Side Propeller in Pattern No. 3.

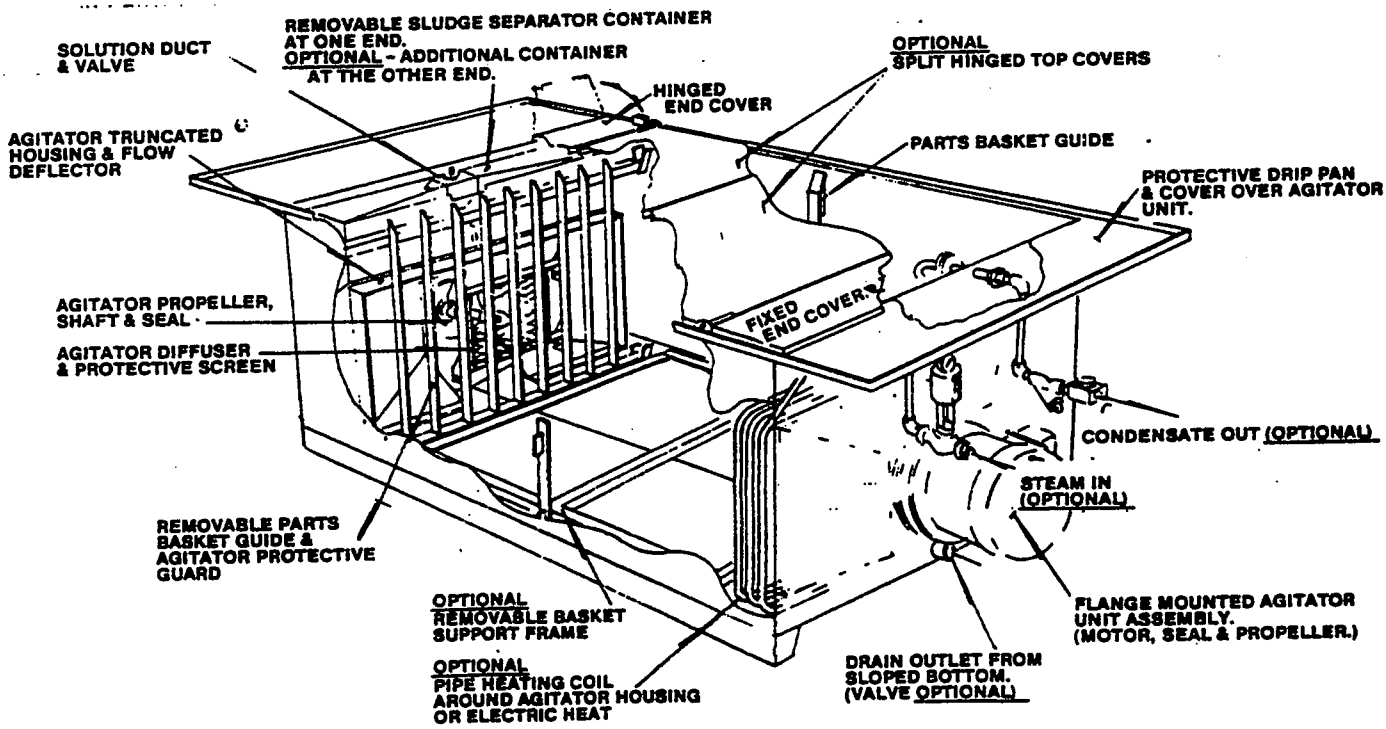


**Figure 9.1. Schematic of a typical square tank turbulator assembly and different flow patterns**

ground covering. When paint removal is complete, the plastic is rolled up, securely sealed, labeled, placed into storage containers, and properly disposed of. Contaminated paint containing metals may be considered a mixed waste and require special handling.

Following decontamination, building surfaces may be repainted in a conventional manner, although repainting does not always take place immediately after removal of the old paint. Action following paint removal depends on the projected future use of the area and the degree of contamination. Resurfacing or further decontamination efforts may be necessary.

Because there is the possibility that workers might be exposed to airborne particulates and/or chemical vapors during the technique application, a training program should be conducted and safety equipment used. For example, respirators may be necessary to protect workers from organic solvent vapors. In another instance, biological monitoring methods that are available for lead, cadmium, chromium, and mercury contamination may be used.

#### 9.3.5.2 Applications

This technique can be used to remove paints from any surface. It is most effective when the contaminated paint layer is the uppermost layer or when the contaminated paint layer is sandwiched between layers of paint. Paint removal and replacement have been used as cleanup techniques in many commercial, industrial, or residential buildings containing high lead-based or other metal-based paints, as well as in buildings contaminated with radioactive residues. For example, paint containing lead in excess of 0.06% by weight can be removed from building surfaces using commercially available paint removers and/or physical means (e.g., scraping, scrubbing, water washing). The removed paint waste is placed in sealed containers and properly disposed of. Surfaces are then repainted with new paint having a lead content of no more than 0.06% by weight. During application, federal, state, and/or local regulations regarding health and safety concerns and control of the waste streams must also be considered.

### 9.3.6 Strippable Coatings

#### 9.3.6.1 Description of Technique

The use of a strippable coating involves the application of a polymer mixture to a contaminated surface. As the polymer reacts, the contaminants are stabilized, becoming entrained in the polymer. In general, the contaminated layer is pulled off, containerized, and disposed of, although a polymer can be applied as a fixative or stabilizer or even as a protective coating for a clean surface.

A self-stripping coating that is a nontoxic, water-based copolymer is also available. As the formula polymerizes, it cracks, flakes, and falls off, taking loose surface material with it. The resultant waste requires no additional processing before disposal.

The necessary health and safety requirements are determined by the hazards associated with the contaminant(s) of interest as well as with the polymer. To avoid contact with the polymer, protective clothing, gloves, and eye protection should be used by workers. If the monomer is hazardous (e.g., vinyl chloride), additional protection such as respirators must be used. When removing materials that generate heat (i.e., Pu-238) care must be taken to prevent excessive heat generation (e.g., separate material into smaller portions).

### 9.3.6.2 Applications

Strippable coatings should be applicable to all contaminants and materials. Different polymer formulations may be required for various building materials. This technique is best suited for coated and uncoated floors and walls because these structural components have large surface areas that are easily accessible. Coatings may also be applied as a protective layer for clean surfaces before those surfaces become contaminated and may be used as fixatives or stabilizers.

Ideally, a strippable coating should remove all the contaminants it contacts, especially on smooth surfaces (e.g., metallic surfaces). There is a potential for the coating not to reach all the contamination on rough surfaces, however, especially if the surface to be treated has a high surface tension or if the polymer molecules are too large to fit in the surface pores. Moreover, secondary treatment may be needed, depending on how effective the polymer is in removing the contaminant and how deeply the contaminant has penetrated the material.

The polymer may bind not only to the contaminant but also to the surface of the wall or item on which it is applied (strippability depends on its properties and those of the surface). In this instance, large volumes of wastes may result, and the building or structural surface may be damaged.

Application of self-stripping copolymer, which is limited to nonporous surfaces since porous surfaces will simply absorb the polymer, can be used to remove rust or oxide layers from base materials. Because oxide layers are quite porous, they tend to adsorb contaminants. By removing the oxidized layers, a copolymer can remove a substantial amount of surface contamination. For rust removal and surface preparation, data have shown that two applications of the copolymer can clean rusted carbon steel surfaces to levels comparable to surfaces cleaned by thorough commercial blast cleaning. When used on oxidized or weathered lead, copper, aluminum, or galvanized steel, one application has been shown to be sufficient to render a metallic surface clean and bright. It is recommended that this material be tested on a small area for each substrate application to ensure its performance.

The polymer-coating technology has been extensively studied and has been widely used in decommissioning nuclear facilities. In practice, a chemical that reacts with the contaminant can be added to the polymer, detoxifying or eliminating its hazardous properties and thereby circumventing the need for secondary decontamination (Esposito et al. 1985; EPRI 1985; Wood, Irving and Allen 1992).

### 9.3.7 Steam Cleaning

#### 9.3.7.1 Description of Technique

Steam cleaning physically extracts contaminants from building and equipment surfaces. The steam is applied using hand-held wands or automated systems, and condensate is collected for treatment. This technique combines the solvent action of water with the kinetic-energy effect of blasting. As a result of the higher relative temperature, the solvent action is increased and the water volume requirements reduced compared to hydroblasting.

#### 9.3.7.2 Applications

Steam cleaning is applicable to a wide variety of contaminants and structural materials. This technique is recommended for use on complex shapes and large surfaces to remove surface contamination or to remove contaminated soil particles from earth-moving and drilling equipment. It can be used in conjunction with scrubbing, either as a preliminary step or as part of the scrubbing process.

Although a lesser volume of waste is generated using this technique than in hydroblasting, the installation of sumps and the use of wastewater storage containers may be necessary. As in hydroblasting, existing sumps or water collection systems may be used but must be checked for leaks to ensure that contamination does not inadvertently migrate to another medium.

### 9.3.8 Sponge Blasting

#### 9.3.8.1 Description of Technique

Sponge blasting, originally developed for the painting industry as a surface preparation activity, is now being used as a decontamination technique. This technique cleans by blasting surfaces with various grades of foam-cleaning media (i.e., sponges). The sponges are made of a water-based urethane. During surface contact, the sponges expand and contract, creating a scrubbing effect. Most of the energy of the sponges is transferred onto the surface being cleaned. A typical system consists of four major components: feed unit, sifter unit, wash unit, and evaporator unit. The feed unit is pneumatically powered and propels the sponges against the surface being cleaned at approximately 100 psig. Standard blasting equipment (i.e., hoses and nozzles) is used to transfer the sponge and air mixture. The sifter unit consists of a series of progressively finer screens used to remove debris from the sponges. Residue from the sifter unit must be properly disposed of. The wash unit is a portable closed-cycle centrifugal unit that launders the sponges, usually in three to five cycles. The evaporator unit reduces the volume of contaminated wastewater from the wash unit before disposal. Because the system cleaning heads are similar to those of other blasting techniques, this technique is readily adaptable to a robotic system. Figure 9.2 is a photograph of a sponge-jet feed unit used to propel pieces of sponge at the surface being cleaned.

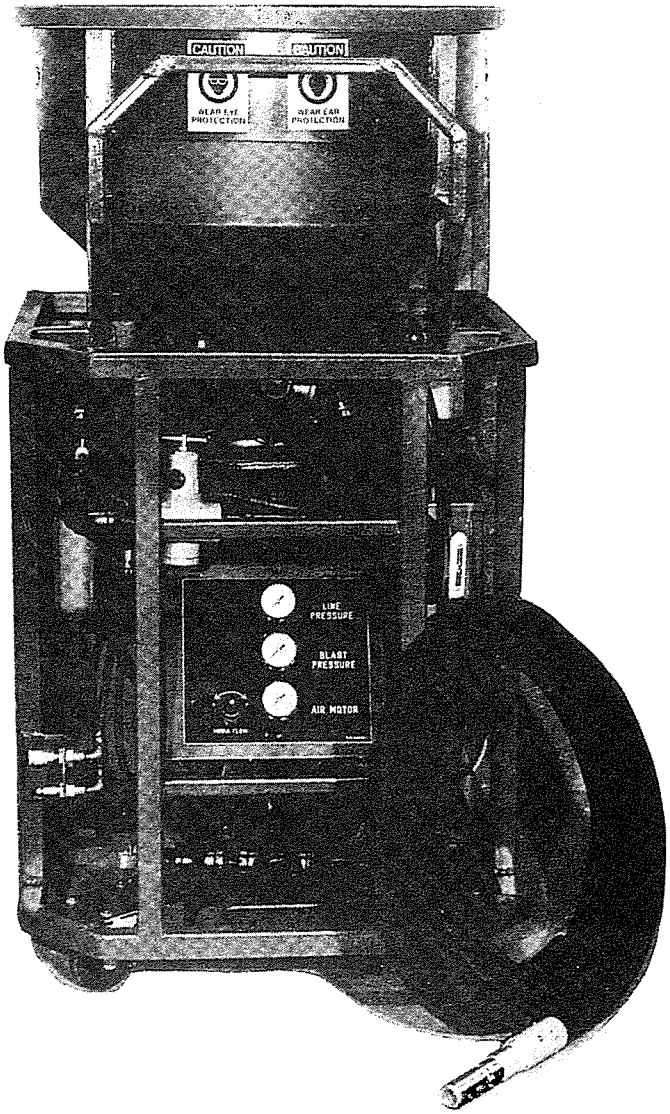


**Figure 9.2. Sponge-jet feed unit**

#### 9.3.8.2 Applications

Two types of sponges are used: a nonaggressive grade that is used for surface cleaning on sensitive or otherwise critical surfaces and an aggressive grade that is impregnated with abrasives which can be used to remove tough material such as paints, protective coatings, and rust. The aggressive grade can also be used to roughen concrete and metallic surfaces. The sponges are absorptive and can be used either dry or wetted with a variety of cleaning agents and surfactants to capture, absorb, and remove surface contaminants such as corrosion, rust, oils, greases, lead compounds, paint, chemicals, and low-level radionuclides. Using wetted sponges decreases the amount of dust that may be generated and also provides for dust control without excess dampening of the surface being cleaned. The sponges are nonconductive and can be used to clean electrical motors and transformers and hydraulic and fuel-oil lines. This system does not use or produce noxious, hazardous, and/or difficult-to-contain substances.

The media typically can be recycled eight to ten times. During the first cycle, the sponge-blasting unit uses approximately 6–8 $ft^3$ of media per hour at a surface-cleaning rate of about 1 $ft^2$/min. The waste stream produced (the spent sponges and the absorbed contaminants) is approximately 0.01 $ft^3$ per square foot of surface cleaned. The sponges can be collected by vacuum for proper disposal. The washwater sponges are collected, filtered, and reused within the unit. As with any blasting technique, a potential for cross contamination exists because sponge particles may be sprayed or otherwise transported into the surrounding areas. Static electricity may be generated during the blasting process; therefore, the component being cleaned should be grounded.

### 9.3.9 $CO_2$ Blasting

#### 9.3.9.1 Description of Technique

This technique is a variation of grit blasting in which $CO_2$ pellets are used as the cleaning medium. Small dry-ice pellets are accelerated through a nozzle using compressed air at 50–250 psig. The pellets shatter when they impact the surface, and the resulting kinetic energy causes them to penetrate the base material and shatter it, blasting fragments laterally and releasing the contaminant from the base material. The dry-ice fragments instantly sublimate, which adds a lifting force that speeds the removal of the contaminant. Removed debris falls to the ground, and the $CO_2$ (now gas) returns to the atmosphere. Because the pellets vaporize, they do not pose a collection, treatment, or disposal problem; however, collection of the removed debris is required. Use of $CO_2$ is advantageous as regards radioactive contamination because it does not become radioactive and because no secondary waste is produced. The airborne contamination potential is typical of that of other blasting actions.

A typical system consists of two major components: a pelletizer that converts liquid $CO_2$ into dry-ice snow and a cleaning station from which the pellets are stored and blasted. The cleaning station is portable and may be used to clean equipment in place, but it may also be used to clean

dismantled equipment that has been transported to a centralized cleaning area where the pelletizer is located. Figure 9.3 is a photograph of typical $CO_2$ pellets and blasting in progress.

#### 9.3.9.2 Applications

Blasting with $CO_2$ has proven effective with plastics, ceramics, composites, and stainless steel. Wood and some soft plastics could be damaged, and brittle materials may shatter. Hard coatings that bond very firmly to the base material may not be removed effectively by this technique. Additionally, soft contaminants such as grease and oil tend to splatter and may require specialized application procedures and collection systems. If the object being cleaned is porous, soft contaminants may be pushed into the base material. However, this technique is very effective for hardened, baked-on grease.

Some cooling takes place in the base material, but the amount of cooling seldom exceeds 40°F. In some applications, cooling makes a small contribution to the cleaning, principally with those contaminants that break up more easily as a result of thermal shock (i.e., those with high moisture content or a high freezing point). The likelihood of damage resulting from cooling is remote, but material analysis should be performed before using this technique on components that may potentially be reused.

In general, $CO_2$ blasting is best applied in a room or booth that is dedicated to that purpose to contain the loosened debris and to isolate the noise of blasting, which can range from 75 dB to 125 dB. In a normal workspace, ventilation is usually sufficient to prevent undue $CO_2$ buildup; in a confined space, however, ventilation needs to be actively monitored. Because $CO_2$ is heavier than air, placement of exhaust vents is best at or near ground level. Static electricity may be generated during the blasting process, therefore the component being cleaned should be grounded (Alpheus).

### 9.3.10 Wet Ice Blasting

#### 9.3.10.1 Description of Technique

This technique is similar to other decontamination technologies that direct a high-velocity stream of fine particles such as steel pellets, plastic pellets, or glass beads onto a surface to remove contamination. This system employs low-pressure air and wet ice for cleaning and surface preparation. Typical air requirements range between 60 and 250 psig at 280 scfm. Because this system uses water in the form of ice as its medium, no other consumables are required. The contaminated water that is generated by the melting ice particles is the controlling medium for the displaced contamination. According to one manufacturer's data, the process uses, and therefore generates, a maximum of 24 gal/hr of water. The water must then be treated for discharge.

When using the wet ice blasting technique, the ice blasting cleaning head may be manually moved about on the surfaces being decontaminated. Decontamination efficiency depends on the

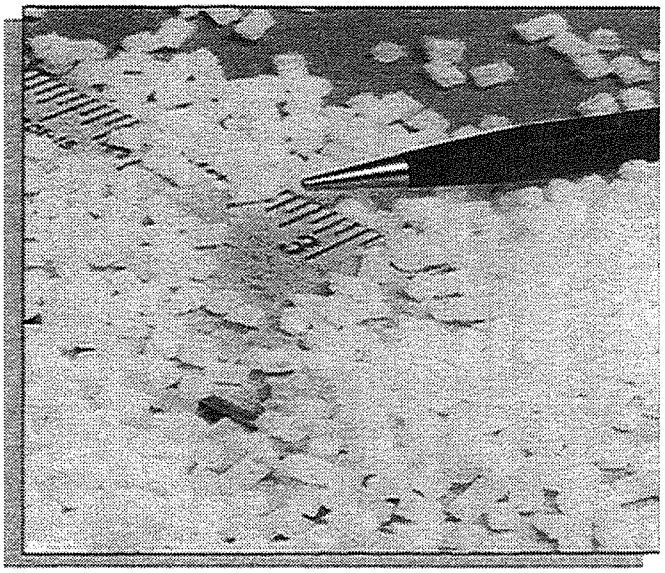

**Figure 9.3. $CO_2$ pellets and blasting in progress**

applicator translation speed, cleaning head distance from the substrate, operating pressure, and geometric complexities of the substrate.

#### 9.3.10.2 Applications

Ice blasting will remove coatings and some fixed surface contamination but will not take off concrete to a significant depth. The waste produced is contaminated water. The amount of water generated depends on the ice blasting rate. For example, a unit recently demonstrated at the ORNL site operated at 11 gal/hr. Because of the low volume of water generated during operation, evaporation, and not recycle, will likely be more cost effective. Nuclear criticality considerations must be addressed when using water when dealing with SNM. Remote operation will require the adaption of the ice blasting and water collection systems to a robotics control system (Applied Radiological Control, MMES 1993).

### 9.3.11 Hydroblasting

#### 9.3.11.1 Description of Technique

In the hydroblasting technique, a high-pressure (several thousand pounds per square inch) water jet is used to remove contaminated debris from surfaces. The debris and water are then collected, treated, and disposed of. Figure 9.4 is a schematic diagram of the hydroblasting technique. Use of the correct lance tip is critical to producing desired results. Configurations range from a jet tip, which produces a narrow stream, to a flat fan shape, which produces flow similar to a point scraper in form. The treated surface may require painting or other refinishing methods if the surface is to be reused. Many manufacturers produce a wide range of hydroblasting systems and high-pressure pumps.

#### 9.3.11.2 Applications

This technique is recommended for surfaces that are inaccessible to scrubbing or that are too large for scrubbing. Hydroblasting can be used on contaminated concrete, brick, metal, and other materials. It is not applicable to wooden or fiberboard materials. In general, the technique is very effective, completely removing surface contamination. On the average, hydroblasting removes 3/16–3/8 in. of concrete surface at the rate of 40 $yd^2$/hr. Hydroblasting may not effectively remove contaminants that have penetrated the surface layer (Esposito et al. 1985). However, variations such as hot or cold water, abrasives, solvents, surfactants, and various pressures that may increase the effectiveness of decontamination can easily be incorporated into the technique.

Water lances have been successfully used to decontaminate pump internals, valves, cavity walls, spent-fuel pool racks, reactor vessel walls and heads, fuel-handling equipment, feedwater spargers, floor drains, sumps, interior surfaces of pipes, and storage tanks. DFs of up to several hundred have been obtained. Experience at one site indicated that DFs of 2–50 could be achieved using water only and that DFs of 40–50 could be achieved if a cleaning agent, (e.g.,

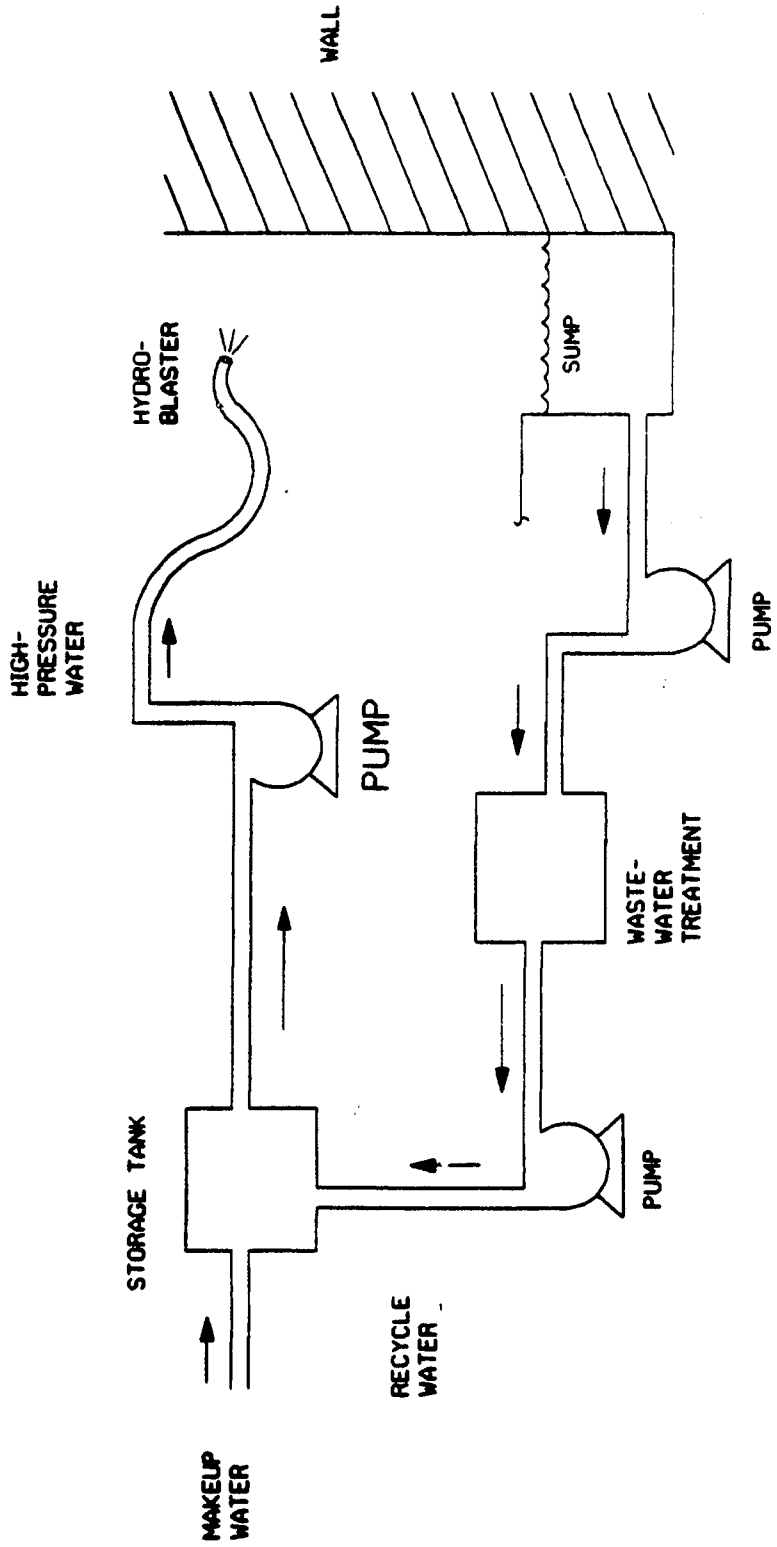


**Figure 9.4. Schematic diagram of the hydroblasting process**

Radiac-Wash) was added. Personnel at the site recommend an initial treatment at lower pressures (500 psi) because the lower pressures perform just as well as higher pressures (3,000–5,000 psi).

To decontaminate pipe runs, a variation of the water lance—the pipe mole—is used. In this method, a high-pressure nozzle head is attached to a high-pressure flexible hose and inserted into pipe runs. The nozzle orifices are angled to provide forward thrust of the nozzle so that the hose can be dragged through the pipe.

Hydroblasting has also been used to decontaminate nuclear facilities, remove explosives from projectiles, and decontaminate military vehicles. Hydroblasting also has been employed commercially to clean bridges, buildings, heavy machinery, highways, ships, metal coatings, railroad cars, heat exchanger tubes, reactors, piping, etc. Given the volume of water generated, installation of sumps and external wastewater storage tanks may be necessary. Existing sumps or water collection systems may be used, although they must be checked for leaks to ensure that contamination does not inadvertently migrate to another medium.

### 9.3.12 Ultra-High-Pressure Water

#### 9.3.12.1 Description of Technique

In this technique, water is pressurized up to 55,000 psi by an ultra high-pressure intensifier pump. The water is then forced through a small-diameter nozzle that generates a high-velocity water jet at speeds of up to 3,000 ft/s. This is the same technique used in abrasive water-jet cutting except that for cleaning purposes the nozzle is mounted in a cleaning head. With the cleaning head attached to a lance, it can be manually moved about the surface being decontaminated. Surface contaminants are first eroded and then removed by the water jet. Deeper penetration of the surface is possible by adding abrasives to the water jet; however, care should be taken to not damage or cut through the material. The contaminant and wastewater require a processing system in which the contaminant is separated, containerized, and disposed of and the wastewater treated and recycled.

#### 9.3.12.2 Applications

Concrete, metallic components, structural steel, and ceramic tile are just a few of the materials that can be decontaminated with ultra high-pressure water. Water jets can remove paint, coatings, and hard-to-remove deposits without damaging the underlying surface. They can also remove galvanized layers from sheet metal.

The decontamination efficiency of the technique is dependent on a number of parameters: water pressure and flow rate, nozzle/cleaning head configuration, distance of the cleaning head to the surface, and translation speed. These parameters must be evaluated, along with the geometric complexities of the substrate, to achieve optimum results.

Because water jets are omnidirectional and have very little thrust, they are readily adapted to robotics or remote operation. Moreover, the power unit is basically the same as that used for water-jet cutting. Therefore, with minor modifications, the unit can be used for either technique as long as the appropriate nozzle is used (i.e., a cleaning head or a cutting head) (MMES 1993, Flow International, K&S Engineering).

### 9.3.13 Shot Blasting

#### 9.3.13.1 Description of Technique

Although the shot blasting technique was originally developed and marketed as a surface preparation technique to enhance coating adhesion, it can be used to remove contaminants from floors and walls. Shot blasting is an airless method that strips, cleans, and etches the surface simultaneously. The technique is virtually dust free, so the potential for airborne contamination is very low. The surface is left dry and free from chemicals, so additional waste treatment is not required.

Portable shot blasting units move along the surface that is being treated as the abrasive is fed into the center of a completely enclosed centrifugal blast wheel. As the wheel spins, the abrasives are hurled from the blades, blasting the surface. The abrasive and removed debris are bounced back to a separation system that recycles the abrasive and sends the contaminants to a dust collector. Larger shot removes more concrete, and the etch depth can be controlled by varying the speed of the unit. Units are available that can remove an up to 1/4-in.-thick surface in a single pass. Units are also available for vertical surfaces. Schematics of portable shot blast units are shown in Figure 9.5 (Wheelbrator).

The contaminated debris and contaminated shot must be treated and disposed of. The mobile unit must also be decontaminated.

#### 9.3.13.2 Applications

Shot blasting is generally used for concrete surfaces, but it can also be applied to metallic components such as storage tanks. Shot blasting effectively cleans surfaces that have been exposed to acids, caustics, solvents, grease, and oil. It can also remove paint, coatings, and rust.

### 9.3.14 Wet Abrasive Cleaning

#### 9.3.14.1 Description of Technique

A wet abrasive cleaning system is a closed-loop, liquid abrasive (wet grit blasting) decontamination technique. The system uses a combination of water, abrasive media, and compressed air and is applied in a self-contained, leaktight, stainless steel enclosure. There is no danger of airborne contamination because a self-contained HEPA air ventilation system maintains negative pressure inside the cabinet. The radioactive waste is mechanically separated

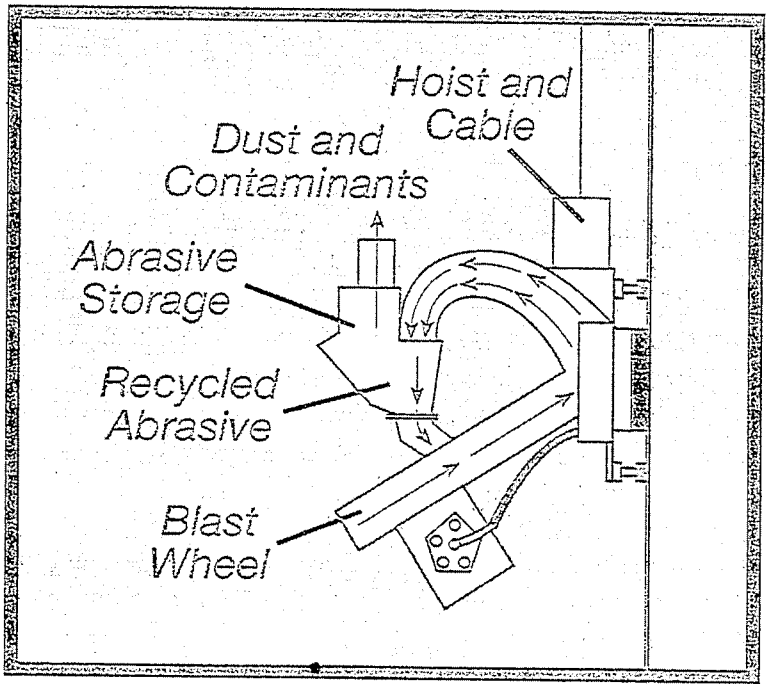


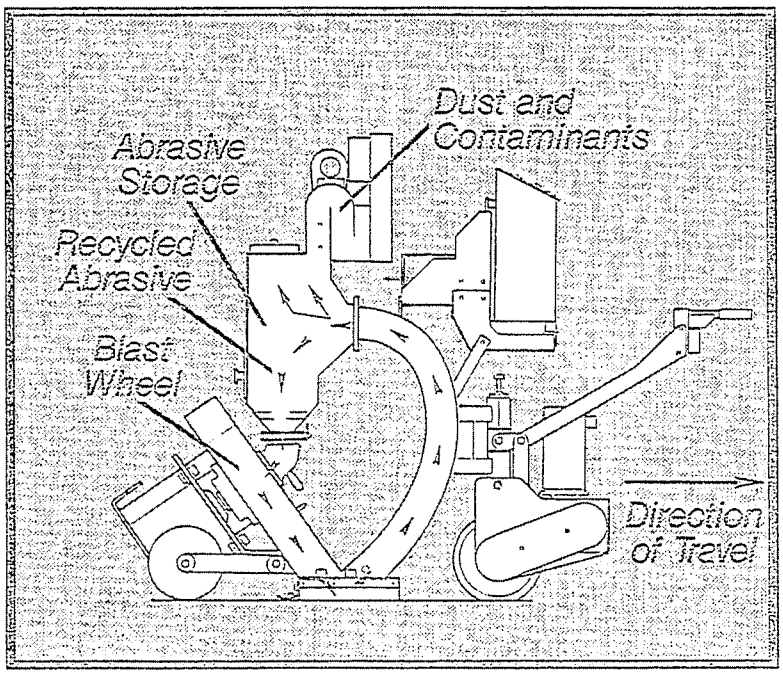


**Figure 9.5. Portable shot blast units**

from the cleaning media, resulting in a very low waste volume. The water can be recycled and filtered, eliminating any access to wastewater drainage.

The system is designed based on field experience and is governed by ALARA concerns. The system uses no soluble or hazardous chemicals, only the abrasive media (e.g., glass beads, aluminum oxide, silicon carbide, ceramics) and water.

#### 9.3.14.2 Applications

Wet abrasive cleaning is being used by many nuclear facilities to remove smearable and fixed contamination from metal surfaces such as structural steel, scaffolds, components, hand tools, and machine parts. The equipment can be used on close-tolerance parts such as turbine blades or valves where the removal of metal is not desired, or it can be adjusted to remove heavy-duty corrosion and paint by varying the amount of air pressure and media.

A basic 4-ft × 4-ft × 5-ft or a larger 4-ft × 8-ft × 7-ft system provides enough space in which to decontaminate small tools or heavy, large-scale parts. If a material cannot be cut down to a smaller size (e.g., long I-beams), it can be fed through small cabinets. Most booths are custom designed to specific configurations and sizes.

Figure 9.6 is a photograph of a 10-ft × 15-ft walk-in decontamination booth. This booth incorporates a system to remove fixed contamination as well as the 3,000-psi high-pressure hot water decontamination system and $CO_2$ blasting capabilities to remove smearable contamination. The booth has a maximum weight capacity of 50,000 lb and is designed to be operated through an exterior glove box or through dual doors, allowing an operator to enter the booth (Kleiber-Schultz).

### 9.3.15 Grit Blasting

#### 9.3.15.1 Description of Technique

The grit blasting technique, commonly called *sand blasting* and *abrasive jetting*, has been used since the late 1800s. This technique, which uses abrasive materials suspended in a medium that is projected onto the surface being treated, results in a uniform removal of surface contamination. Compressed air or water or some combination of both can be used to carry the abrasive. Removed surface material and abrasive are collected and placed in appropriate containers for treatment and/or disposal.

#### 9.3.15.2 Applications

Grit blasting is applicable to most surface materials except those that might be shattered by the abrasive, such as glass, transite, or plexiglass. It is most effective on flat surfaces, and because the abrasive is sprayed it is also applicable on hard-to-reach areas such as ceilings or areas behind equipment. Nonetheless, obstructions close to or bolted to walls must be removed before

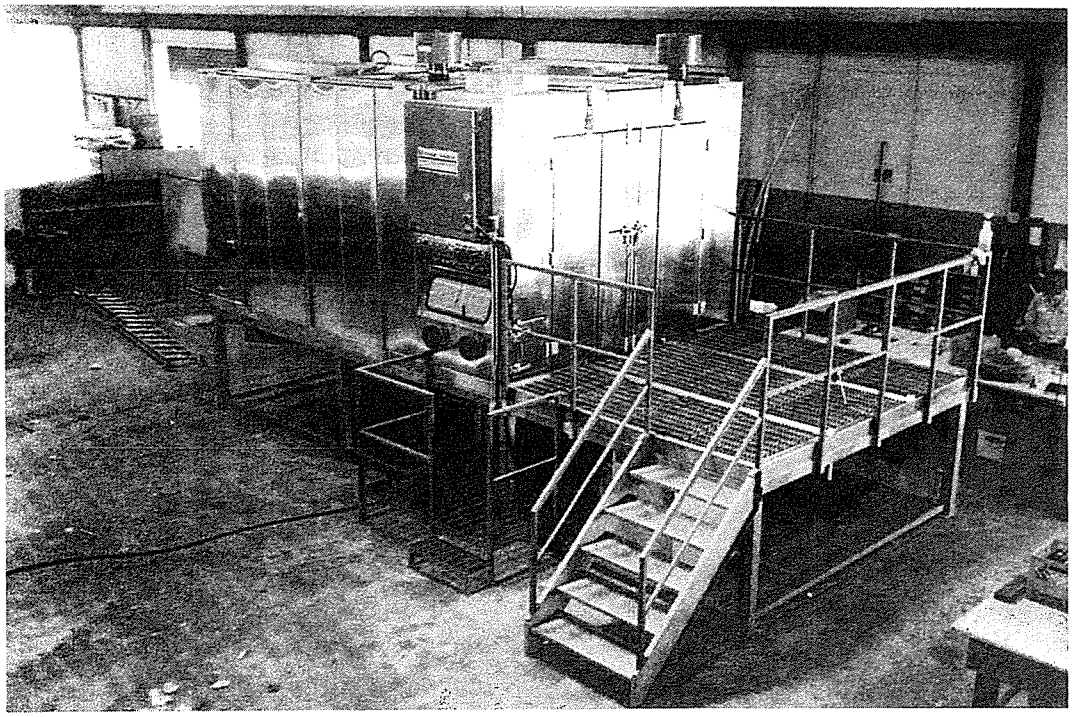

**Figure 9.6. 10-ft by 15-ft walk-in decontamination booth**

application, and precautions should be taken to stabilize, neutralize, or remove combustible contaminants because some abrasives can cause some materials to detonate. Static electricity may be generated during the blasting process; therefore, the component being cleaned should be grounded. Remotely operated units are available.

Abrasives may be applied under either wet or dry conditions. Under dry conditions, dust-control measures may be needed to control dusts and/or airborne contamination. This problem can be reduced by using filtered vacuum systems in the work area. When water is used to apply the abrasive, large volumes of waste are produced that include the wastewater, the abrasive, and the removed debris. These wastes must be properly treated and/or disposed of. If the wastewater can be recycled, it may or may not need to be treated before it is reused. Depending on the application, the following variety of materials can be used as the abrasive media:

- minerals (e.g., magnetite or sand),
- steel pellets,
- glass beads/glass frit,
- plastic pellets, and
- natural products (e.g., rice hulls or ground nut shells).

Silica has also been used as an abrasive; however, its use is not recommended because silica is moderately toxic as a highly irritating dust and is the chief cause of pulmonary disease. Prolonged inhalation of dusts containing free silica may result in the development of a disabling pulmonary fibrosis known as *silicosis*.

A grit-blasting system consists of a blast gun, pressure lines, abrasives, and an air compressor. Several grit-blasting equipment manufacturers and contractors are available. Labor cost could be high because this is a relatively slow and labor-intensive technique. Large amounts of abrasive are required, so costs are necessarily dependent on the type of abrasive used (Esposito et al. 1985; Wood, Irving, and Allen 1992).

### 9.3.16 Grinding

#### 9.3.16.1 Description of Technique

The grinding technique removes thin layers of surface contamination from concrete. In many cases, the contamination is limited to the paint coating or concrete sealer finish. The technique involves abrading the surface that is being treated using coarse-grained abrasives in the form of water-cooled diamond grinding wheels or multiple tungsten-carbide surfacing discs. Machines to power these abrasives are floor-type grinders whose grinding heads rotate in a circular fashion parallel to the floor. Water required for cooling is injected into the center of the grinding head,

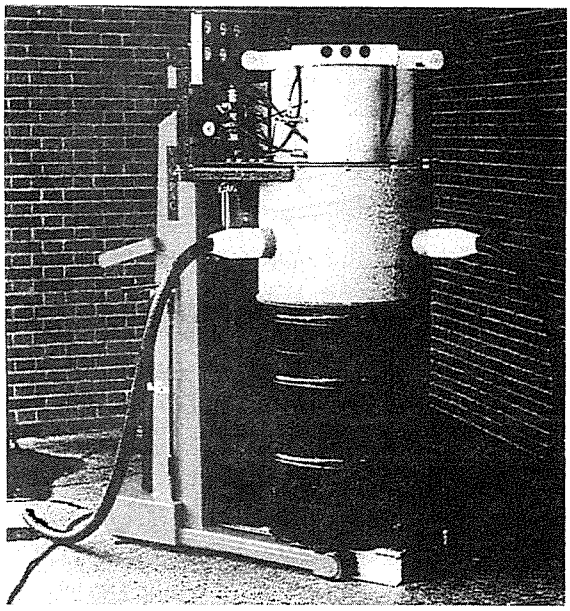

HEPA Filtration Waste Packaging Unit

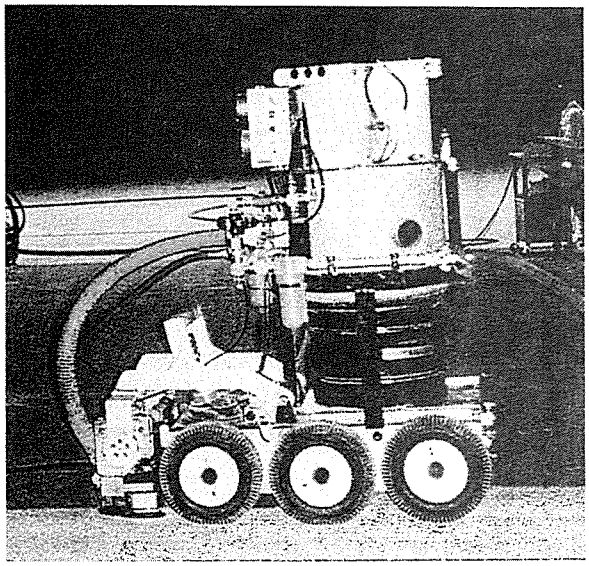

Remotely-Operated Floor Scabbler

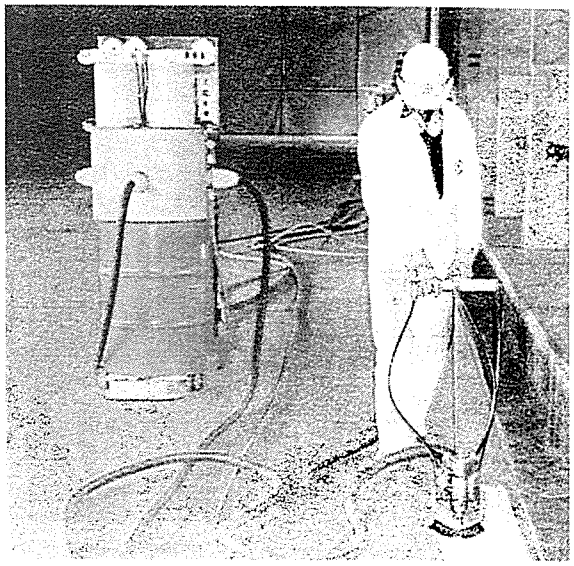

Manually-Operated Floor Scabbler

**Figure 9.8. Scarifying equipment**

One of three types of scabbling bits, which are mounted on the piston heads, can be used: a 6-point anvil bit for surface scabbling, a cross anvil bit for aggressive surface reduction, or a 9-point bit for aggressive removal, leaving a smooth, finished surface profile. All bits have tungsten-carbide cutters and range from 1 3/4 to 2 1/2 in. in diameter, depending on the manufacturer's configuration. The bits have an operating life of approximately 80 hr under normal use. Figure 9.9 shows a scabbler and cutting bits.

Before scabbling, combustibles must be stabilized, neutralized, and/or removed. In practice, floor scabblers can only be moved to within 1/2 in. of a wall. Other hand-held scabbling tools are manufactured to remove the last 1/2 in. of concrete flooring next to a wall, as well as remove surface concrete on walls and ceilings. This technique is a dry decontamination method—no water, chemicals, or abrasives are required. The waste stream produced is only the removed debris.

The approximate removal rates for a scabbler vary depending on the type of bit that is used. In general, the removal rate for a 6-point anvil bit is 30–40 $ft^2$/hr based on the removal of a 1/6-in.-deep layer. The removal rate for a cross anvil bit varies inversely to the thickness removed: 14–24 $ft^2$/hr for a 1/4-in.-deep layer, 7–12 $ft^2$/hr for a 1/2-in.-deep layer, and 3–6 $ft^2$/hr for a 1-in.-deep layer.

**Needle Scaling**

Needle scaling is a scarification process used in both concrete and steel surface removal. These tools are usually pneumatically driven and use uniform sets of 2mm, 3mm, or 4mm needles to obtain the desired profile and performance. The needle sets use a reciprocating action to chip the contamination from the surface. Some manufacturers have added specialized shrouding and vacuum attachments to collect the removed dust and debris during needle scaling with the result of no detectable concentrations above background levels.

For removing surface contamination from steel surfaces where combustibles were once stored, copper beryllium needle sets can be used to reduce the risk of needle sparking. Needle scalers are an exceptional tool in tight, hard-to-access areas, as well as for wall and ceiling surface decontamination. This technique is a dry decontamination process and does not introduce water, chemicals, or abrasives into the waste stream. Only the removed debris is collected for treatment and disposal.

Production rates vary depending on the desired surface profile to be achieved. Nominal production rates range from 20 to 30 $ft^2$/hr.

### 9.3.17.2 Applications

Scabblers are best suited for removing of thin layers (up to 1 in. thick) of contaminated concrete (including concrete block) and cement. It is recommended for instances where (1) no airborne contamination can occur, (2) the concrete surface is to be reused after decontamination, or

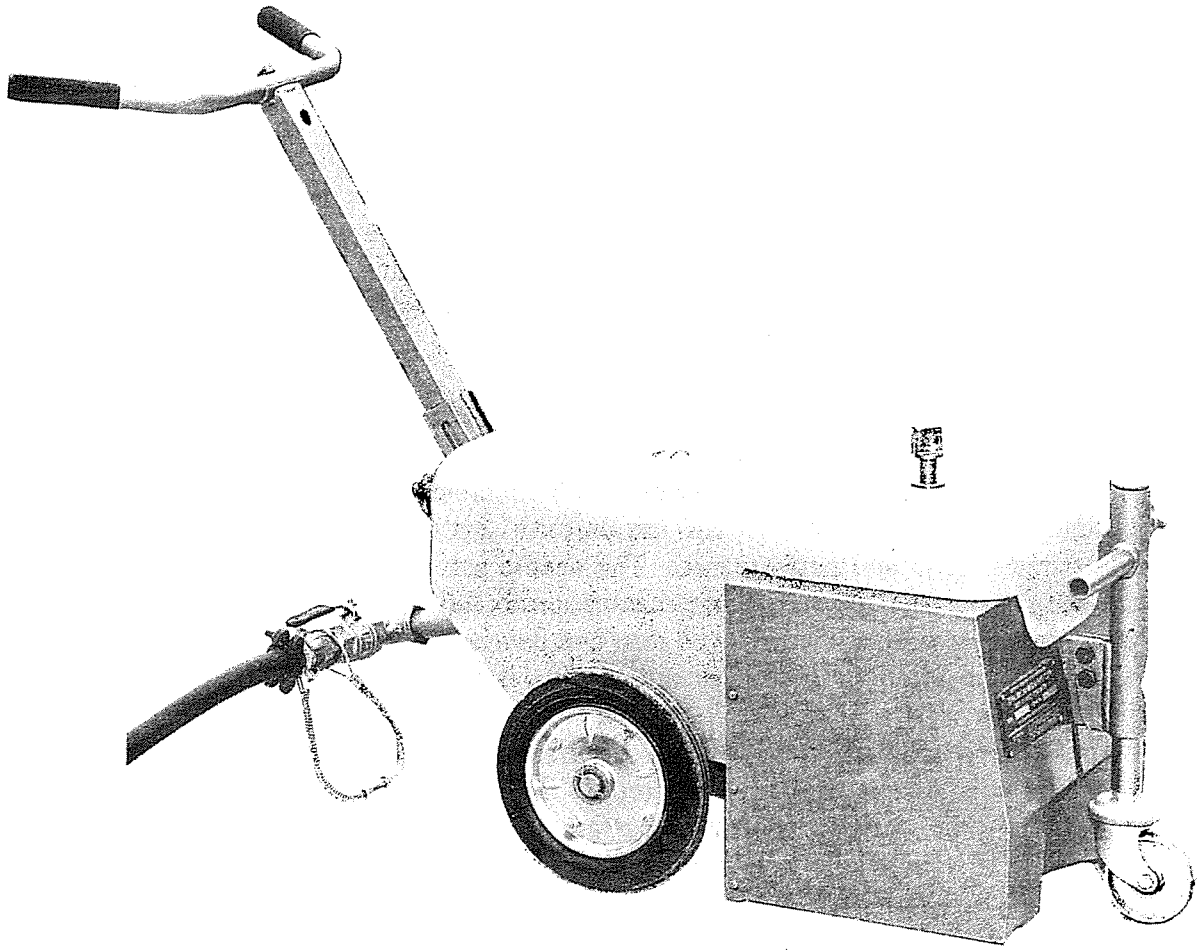

**Figure 9.9. Scabbler**

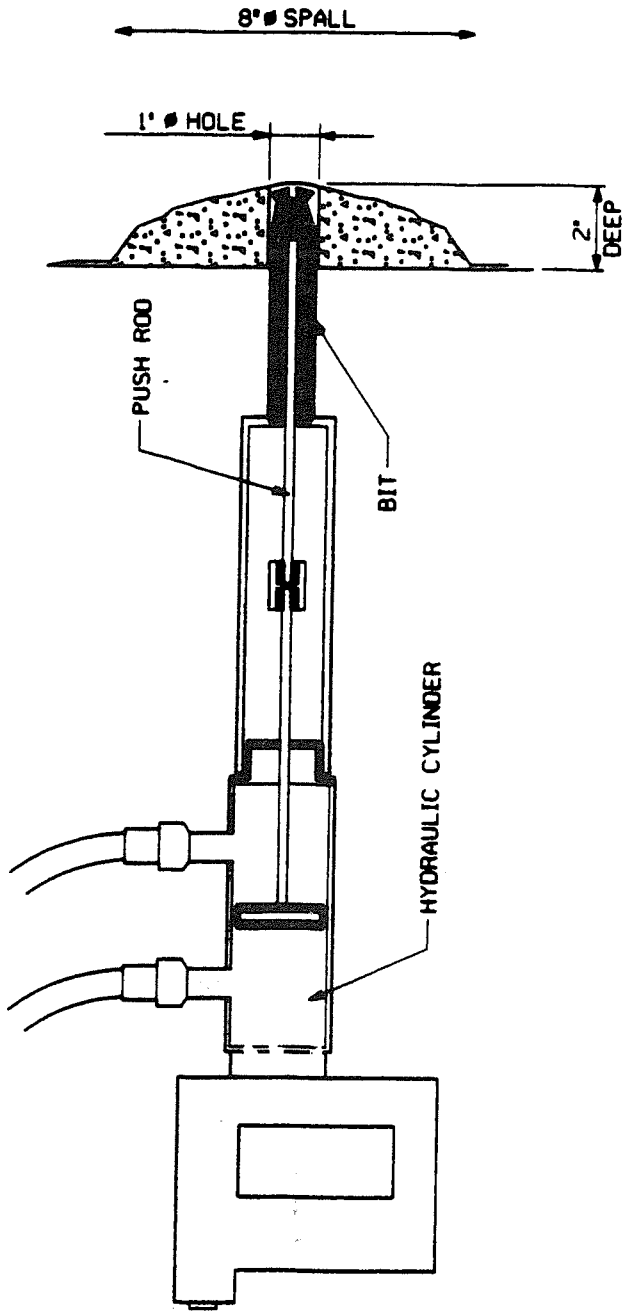


**Figure 9.10. Schematic of concrete spaller**

of a concrete spaller. The spalling rate ranged from 2 to 10 $ft^2/hr$ depending on experience and worker fatigue (Esposito et al. 1985; IAEA 1988; Katayama, Holton, and Gale 1989).

### 9.3.20 Paving Breaker and Chipping Hammer

Although paving breakers and chipping hammers are primarily used in demolition activities, they can be used to remove surface contamination up to 6 in. thick. The surface is left very rough and resurfacing is required. A more detailed description of the technique can be found in Section 10.4.1.6.

### 9.3.21 Expansive Grout

Although expansive grout is primarily used as a demolition technique, it can also be used as a decontamination method to remove a thick layer of contaminated concrete. The method by which this grout is used is described in Section 10.4.1.4.

### 9.3.22 Asbestos Removal

There are four methods used to manage the abatement of asbestos contamination in buildings: removal, encapsulation, enclosure, and special operations. Only the first method, removal, permanently eliminates the asbestos from the area or building. The other three methods leave the asbestos in place in some form. For the purposes of decommissioning, removal is the preferred option and therefore is the only one described in detail in this section.

Asbestos-containing building materials are removed to prevent the release of asbestos fibers into the air. To maximize worker protection removal should be performed before any other segmenting or decontaminating activities in the area. Before removing or disturbing asbestos-containing materials, the work area is isolated so that all asbestos fibers released by the removal activity will be confined to the work area. Accordingly, temporary partitions are constructed, and all exposed surfaces (other than those being removed) are covered with plastic sheeting. HEPA filtration of the work area air is required to minimize the risk of asbestos exposure to removal workers and/or building occupants (if the building remains occupied during removal).

After the work area has been enclosed and plastic sheeting placed over all exposed surfaces, the asbestos-containing material is wetted in place with conditioned water (i.e., water with surfactant added to increase wetting action) or encapsulant. The material is physically removed and placed in sealable bags or containers. When removal is complete, the work area is subjected to a thorough cleaning. All surfaces are wet-wiped or mopped. Vacuums equipped with high-efficiency filters may be used to vacuum up any visible debris deposited on building floors, ledges, other equipment, etc. Porous surfaces may require sealing with a chemical penetrant to prevent the release of any residual fibers.

To prevent the fibers from becoming airborne or otherwise transported and deposited, equipment and personnel leaving the work area must pass through a partitioned area designated as the

*decontamination room.* In this room, equipment is wet-wiped to remove asbestos fibers, and used PPE is discarded into sealable containers for proper disposal. A portable shower and a change area may be provided for the use of workers exiting the work area. Spent shower water is filtered with a disposable high-efficiency filter.

A visual inspection is conducted following removal of the asbestos-containing material to detect incomplete work or inadequate cleanup. Following satisfactory visual inspection, the work area remains undisturbed for 24–72 hr to allow fibers to settle. Air monitoring is then conducted to measure the level of residual asbestos fibers. Acceptable levels are based on federal and/or state regulations. When air monitoring results indicate that the work area is adequately decontaminated, the isolation barriers are disassembled, placed in sealable containers, and disposed of in regulated landfills.

Potential hazards to personnel include inhalation of asbestos fibers, known to be fibrogenic and carcinogenic; heat stress caused by high temperatures and humidity, minimal or no ventilation, and PPE; and electrical shock from the use of water (for wetting) in proximity to electrical equipment (Esposito et al. 1985).

## 9.4 Other Decontamination Techniques

This section presents decontamination techniques in which the primary force is not a result of chemical or mechanical means. These techniques work to decontaminate a surface by inducing a chemical reaction or mechanical action that actually performs the decontamination.

### 9.4.1 Electropolishing

The electropolishing technique, a cleaning technology developed in the 1950s, has been widely used in the metal-finishing industry. It was not until the 1970s, however, that the nuclear industry recognized its potential for cleaning radiologically contaminated equipment. Currently, the technology is gaining popularity in the nuclear industry for surface pretreatment as well as for decontamination operations. The electropolishing technique should be considered when cleaning conductive materials. It has been shown to be particularly effective on conductive materials because they have been shown to reduce contamination to near background levels, making the free-release option technically obtainable.

Several advantages are associated with electropolishing. Conductive surfaces can be decontaminated to a very low or even nondetectable level for free-release applications. A wide range of contamination and conductive surfaces can be effectively decontaminated (i.e., the technique is versatile). Relatively complex components and shapes can be decontaminated using the electropolishing technique without disassembly (Allen 1985). Fairly large items can be decontaminated without sectioning.

One disadvantage associated with the technique is that nonconductive components cannot be cleaned. Nonconductive coatings (e.g., paint, epoxy) must be removed from conducting components before cleaning can be performed. Exposure levels could be excessive unless remote techniques are employed when cleaning highly contaminated parts (Allen 1985). Components may need to be repeatedly cleaned if excessive amounts of contamination are allowed to build up in the electrolyte.

### 9.4.1.1 Description of Technique

Electropolishing is an anodic-dissolution technique. During electropolishing operations, a small, controlled amount of material is stripped from the surface of the object being cleaned. Contamination embedded in the stripped material is carried off into dissolution, resulting in a surface nearly free of contamination. The technique is considered "a versatile technique that is equally effective for almost any combination of contamination and conductive surface, including corrosion layers" (Allen 1985).

There are three basic process technologies available: phosphoric-acid-based systems, nitric-acid-based systems, and organic-acid-based systems. Each of these systems is similar in arrangement to plating installations. A schematic of a typical arrangement is shown in Figure 9.11.

Direct current (dc) power is supplied to the system at low voltages. The object being cleaned is connected to the anode (+), and a series of metallic plates is connected to the cathode (–). Both the anode and cathode are immersed in a chemical bath consisting primarily of one of the three electrolytes listed above. When current is applied, the electrolyte acts as a conductor, allowing metal ions to be removed from the part being treated. While the ions are drawn towards the cathode, the electrolyte maintains the dissolved metals in solution. The nature of the electrolyte constitutes the primary difference in each of the three available systems.

**Phosphoric Acid Electrolytes**

Representative operating parameters for phosphoric-acid-based electropolishing decontamination are as follows:

- concentrations: 40–80% by volume,
- operating temperature: 40–80°C,
- electrode potential: 8–12 V dc, and
- current densities: 60–270 mA/cm$^2$.

Typical decontamination times range from 5 to 30 min, which corresponds to the removal of 0.3–2 mils of surface material at a current density of 160 mA/cm$^2$. It is usually necessary to move the anode contacts once during a cycle to decontaminate the area under the contacts.

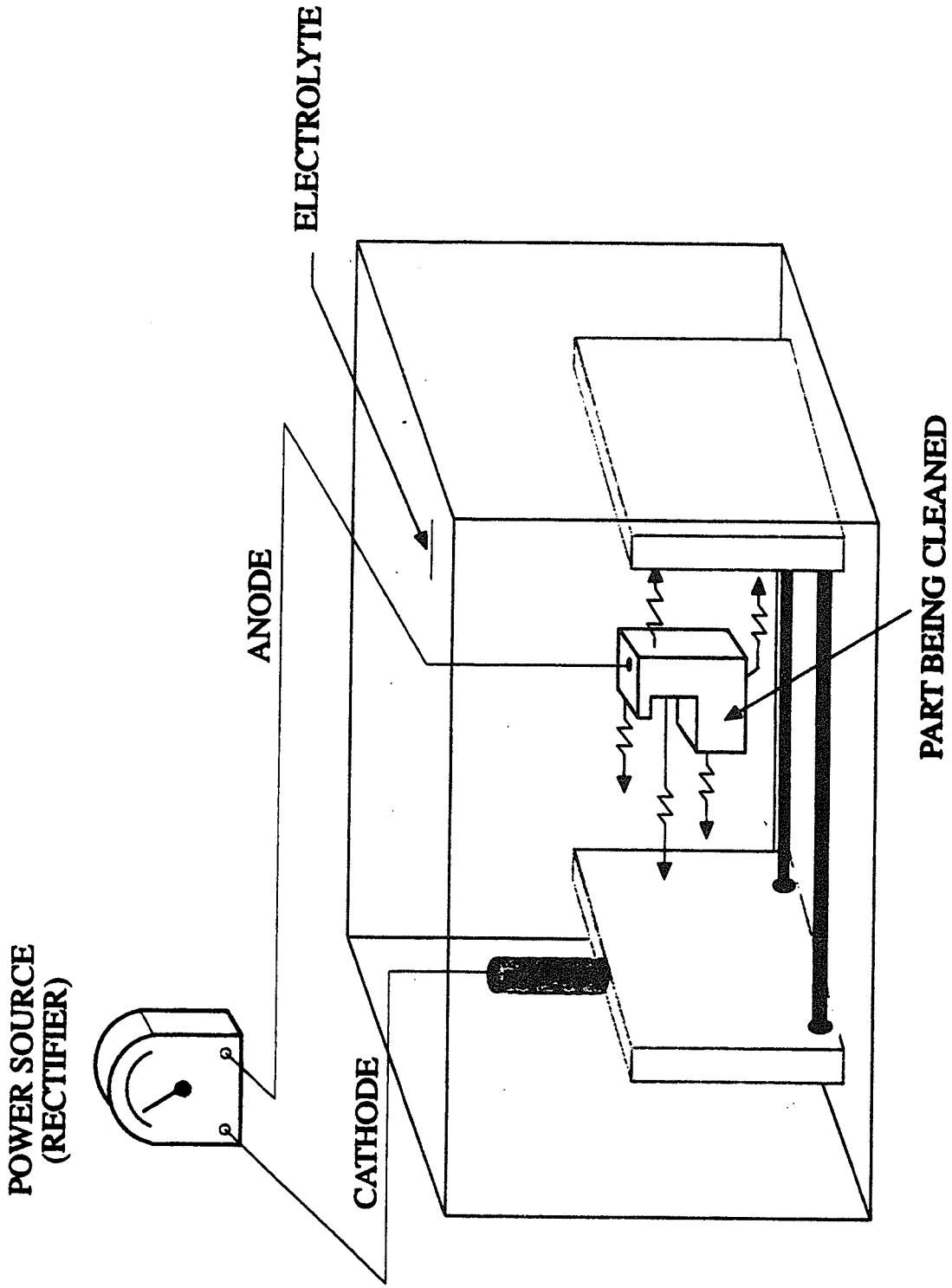


**Figure 9.11. Electropolishing schematic diagram (adapted from Sanders and Turner 1991)**

PNL has demonstrated that phosphoric-acid-based systems are effective on steel, stainless steel, and a number of alloy systems (Allen et al. 1978). The electrolyte's hygroscopic nature helps to minimize airborne contamination. Phosphoric acid's good complexing characteristics may be a significant factor in minimizing recontamination from buildup in the electrolyte (Van Wazer 1958).

Studies performed at PNL in cooperation with Rockwell Hanford Operations and United Nuclear Industries show that components heavily contaminated with plutonium oxide were decontaminated from 1,000,000 dpm/100 $cm^2$ to background in less than 10 min (Allen et al. 1978).

Phosphoric-acid-based electrolytes are not effective in decontaminating welds. It is believed that metallurgical changes caused by welding makes welded areas less soluble than the base materials. It has also been observed that low-current densities produce nonuniform metal removal and that high-current densities produce excessive oxygen evolution.

## Nitric Acid Electrolytes

Two sets of operating conditions are used in nitric-acid-based systems: high-density current and low-density current. Representative operating parameters for high-density, nitric-acid-based electropolishing decontamination are as follows:

- electrolyte: nitric acid, 6–12 mole,
- operating temperature: 10–35°C,
- electrode potential: 5–8 V dc, and
- current densities: 400–2,000 mA/$cm^2$.

Typical low-density decontamination times range from 1 to 2 hr, which corresponds to the removal of 0.3 mils of surface material at a current density of 400 mA/$cm^2$.

Because of the low-density current, a basket-style anode can be used, thus eliminating the need to move the anode contacts during the decontamination cycle.

Studies performed at Harwell Laboratory, Oxfordshire, U.K., show that low-density current nitric acid electrolytes could achieve DFs of better than $10^4$ for components contaminated with colloidal plutonium and with $PuO_2$ in about 2.2 hr and 1.7 hr, respectively (Sanders and Turner 1991).

Harwell Laboratory has demonstrated that nitric-acid-based systems are effective on steel, stainless steel, and a number of alloy systems. Dissolved substrate levels in the electrolyte up

to 20 g/l have only a minor effect on recontamination of the object being cleaned (Turner and Steringer 1988).

Nitric-acid-based electrolytes operated at low-density currents provide good results on welded surfaces. The systems can generate hydrogen and nitrogen oxide gases, but these gases can be controlled or eliminated by using the proper electrode materials and electrolyte additives.

## Organic Acid Electrolytes

Harwell Laboratory has performed research on the relationship between cathode materials and chemical additives and their effect on hydrogen and nitrogen oxide production in nitric-acid-based electrolyte systems.

Representative operating parameters for acetylacetone-based electropolishing decontamination are as follows:

- electrolyte: acetylacetone + KBr+n-propanol,
- operating temperature: 20–40°C,
- electrode potential: 15–24 V dc, and
- current densities: 200 mA/cm$^2$.

Typical decontamination times range from 40 to 100 min, which corresponds to the removal of 1–2 mils of surface material at a current density of 200 mA/cm$^2$. It is usually necessary to move the anode contacts once during a cycle to decontaminate the area under the contacts.

There are three major advantages of using an acetylacetone-based electrolyte:

- Acetylacetone has good pH stability and can resist changes caused by the formation of hydroxides.
- The organic acid component can be destroyed, resulting in a nonacidic waste.
- The radioactive contents of the electrolyte reach a steady state governed by the solubility of the acetylacetonate salts. This advantage is a benefit where criticality is a concern and where radiation control is essential. The large salt crystal formed in this process can be removed from the bottom of the electropolishing vessel and isolated in a safe storage condition (Turner and Steringer 1988).

Studies performed at Kraftanlagen Aktiengesellschaft, Heidelberg, Germany, show that an acetylacetone electrolyte could achieve a DF of 36 for components with generalized contamination consisting largely of Cs-137 and Co-60 in about 60 min (Turner and Steringer 1988).

#### 9.4.1.2 Applications

There are two major divisions in immersion electropolishing equipment: equipment that accommodates total immersion of objects and equipment that accommodates partial immersion of objects.

**Total Immersion Equipment**

The literature reports that several sizes of immersion electropolishing systems have been designed and built. At PNL, a 400-gal system was designed, built, and used for decontamination studies. Mobile electropolishing decontaminating services are available.

**Partial Immersion Equipment**

Large equipment can be electropolished in stages by using partial immersion processes (Figure 9.12). One such technique makes use of a trough-shaped tank equipped with roller-base supports that provide easy rotation of cylindrical tanks during the polishing process.

Some tank interiors can be electropolished using the partial immersion process. The process involves filling the tank with electrolyte, making the appropriate electrical connections, and setting the power supply to the appropriate current density. After the process is complete, the tank is emptied and the electrodes are removed. The final step is rinsing the tank (Madden and Thomas 1991).

### 9.4.2 Ultrasonic Cleaning

#### 9.4.2.1 Description of Technique

This technique uses a generator to produce an ultrasonic frequency (above 20 kHz). A transducer then converts this high-frequency energy into low-amplitude mechanical energy (i.e., vibrations) of the same frequency. A vigorous scrubbing action is produced by a cleaning solution and imparted onto the object being cleaned. The scrubbing action is attributed to the rapid formation and violent collapse of thousands of minute bubbles. The bubbles are created by cavitation, which is caused by the outward and inward movement of the transducer's surface, in the solution.

The most important parameters for ultrasonic cleaning are ultrasonic frequency, power intensity, cleaning-solution viscosity, temperature, and fluid recirculation rate. Additionally, the tank size and the geometry of the object being cleaned in relation to the transducer placement must be evaluated. These parameters must be properly controlled to obtain the best possible

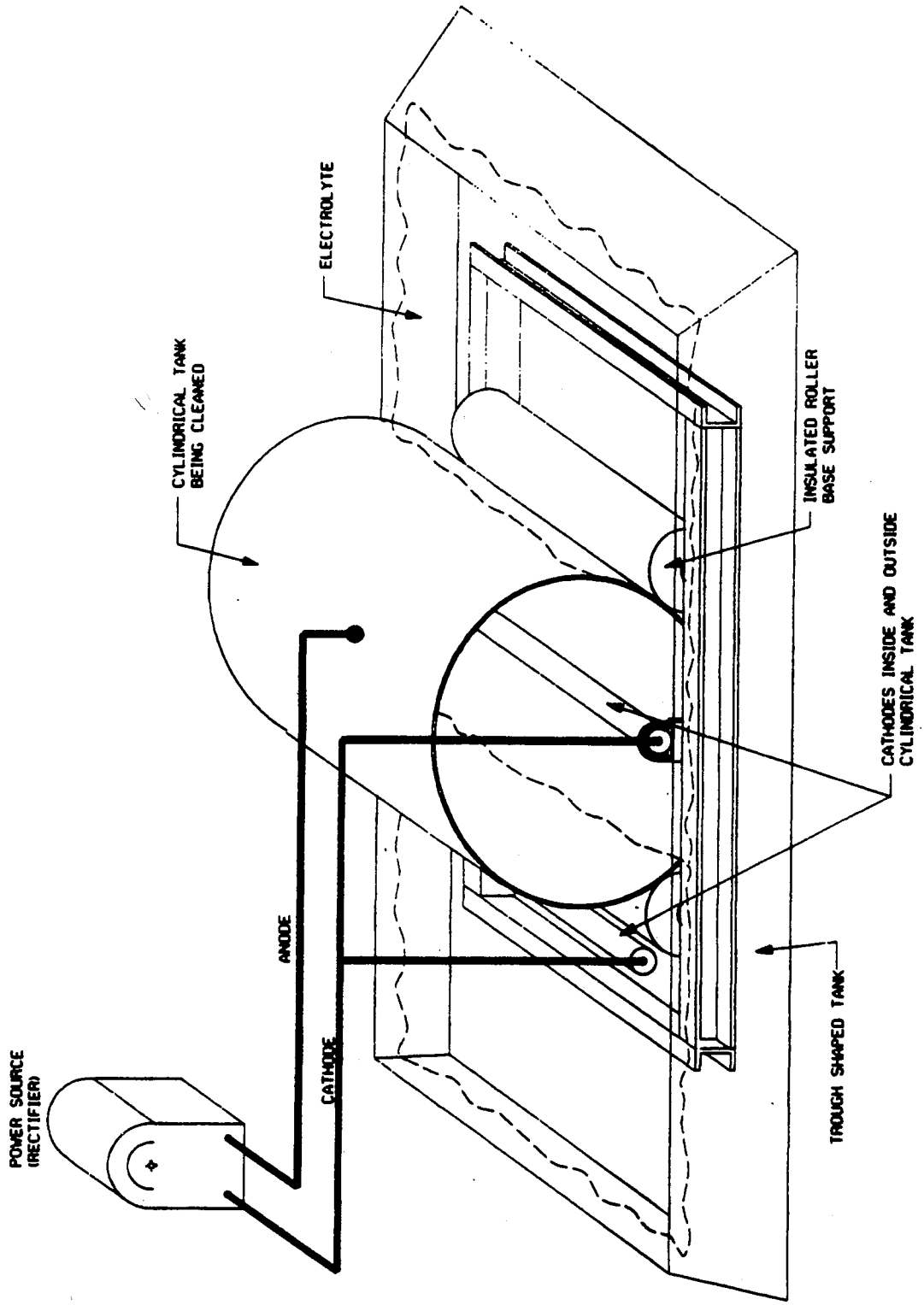


**Figure 9.12. Partial immersion electropolishing schematic diagram**

decontamination of an object. In addition to cavitation, ultrasonic streaming (induced liquid circulation) contributes to the decontamination of an object.

The cleaning action can be enhanced by heating the solution, performing mechanical stirring, and adding chemicals to the cleaning solution. Additives such as wetting agents and chelating agents can also have a profound effect, although the concentration of chemicals in the bath solution should be approximately 2–5% by weight.

An effective method that may be used for removing radioactive particles from solid surfaces using ultrasonics follows: First, the parts to be cleaned are sprayed or sonicated with a dilute solution of a high molecular weight fluorocarbon surfactant in an inert perfluorinated liquid to effect particle removal. Second, the parts are then rinsed with the perfluorinated liquid to remove the fluorocarbon surfactant applied in the first step. Third, the residual rinse liquid is evaporated from the parts into an air or nitrogen stream from which it is subsequently recovered. (Kaiser and Hurling 1993).

#### 9.4.2.2 Applications

Objects with loosely deposited and loosely adherent contamination (i.e., not fixed) have been decontaminated successfully using ultrasonics. These objects include metallic hand tools, pump seals and pistons, valves, seal-injection filters and other filters, and control-drive mechanisms. Ultrasonic equipment for small items is commercially available. Ultrasonic equipment for large items can be designed and constructed, although it should be noted that immersion of large items results in less effective decontamination. This technique is not recommended for concrete components, nor should it be used on materials that adsorb ultrasonic energy (e.g., plastics, rubber).

### 9.4.3 Vibratory Finishing

#### 9.4.3.1 Description of Technique

Objects are placed in a basket filled with abrasive media that is vibrated at a high frequency in a cleaning solution. The vibrating media produce a scouring action that removes contamination as well as tape, paint, and corrosion products from the surfaces of almost any type of item. Commonly used abrasives are triangular ceramic or conical plastic material impregnated with aluminum oxide. Spent abrasives and removed contaminants are carried to a holding tank by the cleaning solution where they are collected and concentrated for disposal. The cleaning solution can be recycled, thus reducing the quantity requiring disposal.

#### 9.4.3.2 Applications

This technique is commonly used in manufacturing as a deburring technique. However, it is also applicable for decontaminating such items as hand tools (e.g., hammers, wrenches, screwdrivers) and large quantities of smaller objects. The size and weight of the objects are obviously limited

by the size of the vibratory container. For example, a 4-$ft^3$ container can handle approximately 300 lb of components, the maximum size of each object being 8–12 in. in diameter. The time required to decontaminate a component is dependent on the component geometry and the amount and type of contaminant. Process times to decontaminate range from 4 to 10 hr per batch. Units are commercially available with volumes up to 100 $ft^3$.

This technique is an effective pretreatment technique for chemical decontamination methods. It removes latex paint, enamel paint, grease, and oil, each of which can limit the effectiveness of chemical decontamination methods. Because an abrasive is used, excessive metal loss may occur as well as curvature of previously sharp corners; however, in decommissioning this is not a problem (Wood, Irving, and Allen 1992; Applied Radiological Control, Inc. 1989).

## 9.5 Emerging Technologies

In the last decade, many decontamination development activities have been initiated in anticipation of the extensive program activities scheduled to begin in the next 10 yr. Most of these technologies have not yet been field tested. Regardless, a fraction of these development activities appears to be more effective in special situations than the established chemical and mechanical methodology currently being used. For this reason, an overview of these technologies is included in this section.

A literature review indicates some of these technologies may be more well developed than others. Because these technologies have not been field tested, there is no way to determine their effectiveness at this time. The purpose of this section is to develop an awareness of these ongoing activities.

### 9.5.1 Light Ablation

#### 9.5.1.1 Description of Technique

Light ablation uses the absorption of light energy and its conversion to heat (photopyrolysis) to selectively remove surface coating or contaminants. For a given frequency of light, some surfaces reflect the beam, some (such as glass) transmit the beam, and others absorb the light energy and convert it to heat. There are three candidate light sources for use in light ablation applications: laser, xenon flash, and pinch plasma lamps. The first two of these are currently commercially available, and the third is under development.

If the properties of a specific contaminant/substrate combination are known, a proper light frequency can be selected for use. If the light intensity is high enough, the surface film can be heated to 1,000–2,000°C in microseconds or less, while the substrate is virtually unaffected. With each light pulse, some of the surface contaminant is transformed from a solid into a plasma, which erupts from the surface. The high-temperature gas or plasma produces a brilliant flash of light and a loud audible report (up to 90 dB) from the plasma's supersonic shockwave. Photochemical and thermochemical reactions, such as organic destruction occur within the

plasma, but there is no flame because the shock wave pushes ambient oxygen away from the gas plasma.

This technique has the ability to operate at a distance by transporting the light through periscopes or fiber optics up to 450 ft long. The small laser heads, fiber optic cables, or compact flash blast heads can easily be adapted for manipulator use. These small components can be designed into a robotic viewing, aiming, and handling system to gain access to and decontaminate otherwise inaccessible areas (Flesher, 1992).

#### 9.5.1.2 Applications

Surface coatings that have been removed by the high-energy light technique range from epoxy paints, adhesives, and corrosion products to centuries of accumulated airborne pollutants and 1/4-in. layers of concrete. Surfaces contaminated with several different compounds or particles may require multiple passes, changing the frequency and/or intensity to match a particular contaminant and remove it with each pass. Research in this area for decommissioning purposes is being performed by Westinghouse Hanford Company and Ames Laboratory at Iowa State University.

Because no chemicals or abrasives are used, there is no increase in secondary waste volume. In some cases, a light water spray may be used; however, no liquid runoff or dissolution is required. In most applications, the volume of waste should be equal to or less than the actual volume of the coating removed. The high-energy light and plasma generated are frequently accompanied by photoreaction, which reduces organic molecules to their basic gaseous constituents, to reduce the overall solid waste volume.

This technique minimizes the potential for exposures that result from contact with contaminated surfaces because the end effectors for both the xenon flash (at 1/2–1 in.) and the laser (at 50 ft or more) are at a distance from the contaminated surface. These end effectors are small (under 10 lb) and are attached to their power supplies and controls by cables or fiber optics up to 450 ft long. Therefore, operators are not required to make contact with the surface, and the equipment is easily adaptable to remote operations.

### 9.5.2 Microwave Scabbling

A new method for surface removal of concrete has been developed at the Oak Ridge Y-12 plant. This technique directs microwave energy at contaminated concrete surfaces and heats the moisture present in the concrete matrix. Continued heating produces steam-pressure–induced internal mechanical stresses and thermal stresses. When combined, these two stresses burst the surface layer of concrete into small chips. The chips are small enough to be collected by a HEPA-filtered vacuum system that is connected at the tailing end of the mobile unit. Less than 1% of the debris is small enough to pose an airborne contamination hazard. Larger debris can be manually vacuumed. The concrete removed can be controlled by choosing the frequency and power of the microwave system. Higher frequencies concentrate more of their energy near the

surface and remove a thinner layer of material. A thicker layer can be removed by using lower frequencies, which are absorbed deeper in the concrete. A schematic of the system is shown in Figure 9.13.

This technique is applicable to concrete surfaces only because metallic surfaces negatively impact the performance of the technique. Steam was observed escaping from the outer edges of a support bolt during laboratory-scale tests. The effect of steel-reinforcing bars, however, does not seem to pose any problems because they are usually far below the surface. A layer of paint had negligible impact on performance during testing. Cracks in the surface allow steam to escape and have a negative effect on performance. This technique generates little dust and does not require the concrete surface to be wet, which eliminates the cost of disposal/treatment (with the exception of the removed debris). The mobile test unit collected approximately 95% of the removed debris. It is expected that a larger vacuum system can collect 98% or more of the debris. Currently, the test unit is applicable only to floors; however, future phases of development are expected for wall and ceiling applications. No information has been given on the amount of microwave energy that may be transferred (i.e., leaks) from the surface being treated and the applicator. If the amount of leakage is above the American National Standards Institute (ANSI) standard of 5 $mW/cm^2$, then appropriate measures must be taken to eliminate this leakage for safety purposes. (White, 1992; DiDonato, 1993).

### 9.5.3 Flaming

#### 9.5.3.1 Description of Technique

This technique uses controlled high-temperature flames applied to noncombustible surfaces to thermally degrade organic contaminants. Combustible materials (i.e., wood and plastic) and friable materials (i.e., asbestos and transite) are removed before the flaming operation. Surfaces must be accessible to the flame front, so obstructions must be removed to achieve complete surface decontamination. The heat conduction to inaccessible areas is dependent on the building material and flame dwell time. Because of the high temperature, the dwell time should be held to a minimum to minimize material damage. If a subsurface decontamination of a building material is required, the dwell time can approach 10 min or longer (time is dependent on material); however, this can cause excessive damage.

The contaminant thermally decomposes to volatile products by combination ring-splitting or fragmentation. In all cases the reaction is exothermic and autocatalytic. Complete decomposition of all contaminant residue that is near the flame front should be accomplished given the intensity of the heat and the action of free radicals developed by the flame.

Thermal decomposition of organic contaminants may produce gaseous pollutant hazards that would require scrubbing to prevent release to the atmosphere. If lead paint was used in the building, toxic lead vapors may form during flaming. If combustible residues are heated, either directly by the flame or indirectly by heat conduction, an explosion may occur. There is also the

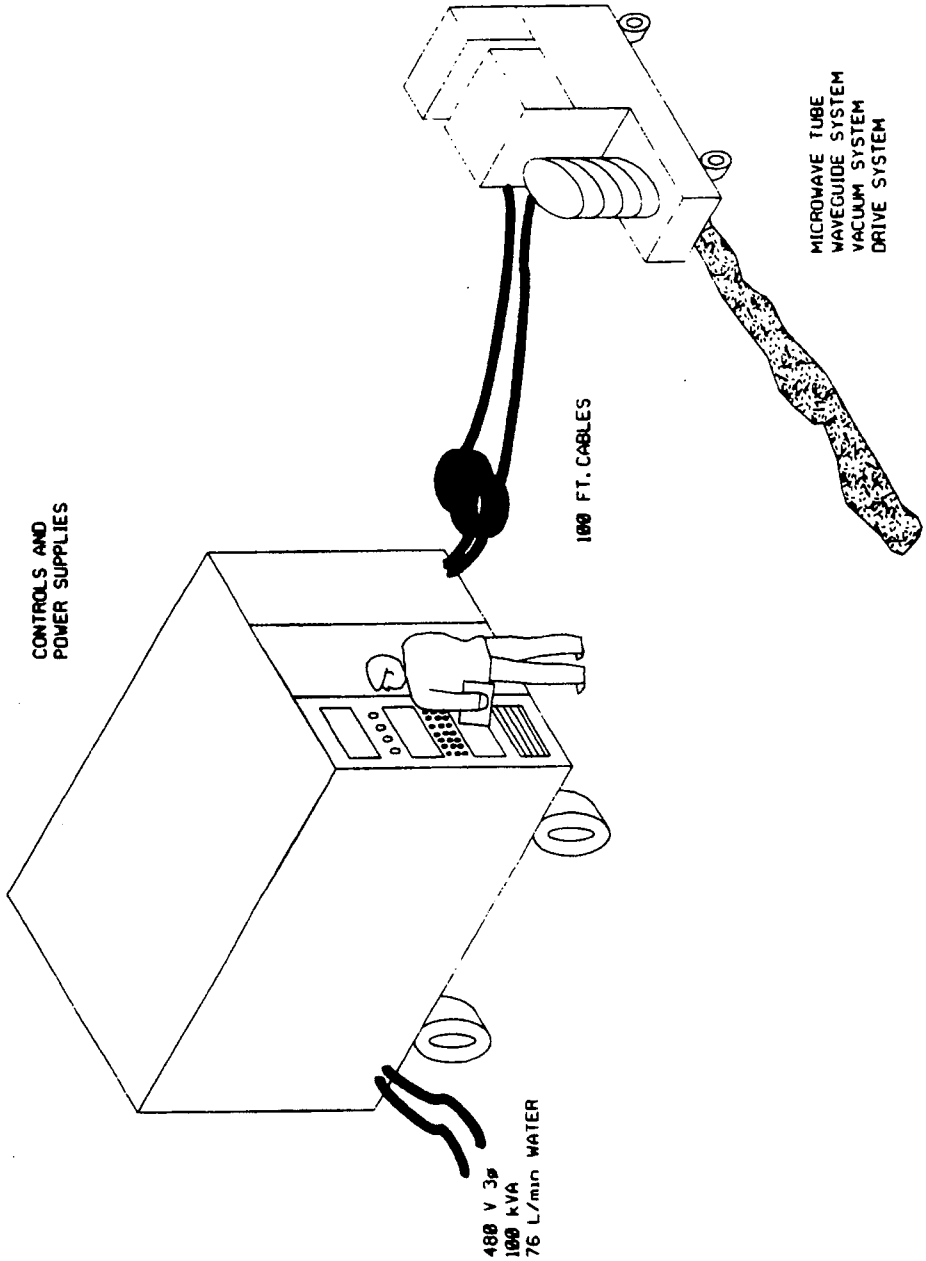


**Figure 9.13. Microwave scabbler**

possibility of personnel being burned by the flames or hot surfaces. The fire department should be notified before and during the implementation of this technique.

#### 9.5.3.2 Applications

Flaming is primarily a surface decontamination technique for painted and unpainted concrete, cement, brick, and metals. The adsorption of the contaminant on a particular substrate may inhibit the decomposition reaction; however, this effect is expected to be small, and it is believed that complete destruction of the contaminant on surfaces can be achieved. Subsurface decontamination of building materials may be possible, but extensive damage to the material would probably result. The requirement for a supplemental treatment depends on both the depth of contamination and the thermal penetration.

Flaming may either be accomplished by a hand-held flame or by a remotely operated flame. The use of a remotely operated flame is restricted to expansive open surfaces, whereas hand-held flamers are required for complex areas, cracks, etc. For nooks and crannies, a 2-min dwell time is suggested. For subsurface treatment, decontamination time increases greatly: to achieve a thermal penetration of 300°C at a depth of 5 cm, a dwell time of 16 min for concrete and 25 min for brick is required.

Removal and cleanup of surface paint char may be required before repainting. Washdown of concrete may be advantageous to allow it to regain its strength. If a structure is ultimately to be torn down, this treatment may mean the difference in cost between disposing of the debris in a hazardous waste landfill versus a solid waste landfill. A cost-benefit analysis would determine the cost differential.

At the Frankford Arsenal, the walls and floors of large buildings were decontaminated using remotely operated flamers. The flamers were set up to cover as large an area as possible, and torch heads were positioned approximately 4 in. from the building surface. The units had a traverse speed of 10 ft/min, and cracks were flamed for 1 min. Remote flaming was used on buildings that were contaminated with both radiological and explosive residues. When it appeared the flaming technique would spread the radioactive contamination, local enclosures were used to control the airborne radioactivity. Hand-held flamers were used to supplement the remote flamers when areas were inaccessible to the floor and wall units and also in small buildings. The heads were positioned the same as the remote units, as were the traverse speed and crack dwell time (Esposito et al. 1985).

### 9.5.4 Flame Scarifying

This technique is similar to flaming; however, in this technique the top layer of concrete is heated to cause differential expansion and spalling. Pieces of up to several centimeters in diameter erupt from the surface. Machine burners with widths of up to 3 ft have been used for large surfaces such as roadways and large floor areas. Hand-held burners up to 10 in. wide are available for vertical surfaces. A combination of higher dwell times and closer stand-off distances than those

associated with flaming would be required to achieve spalling. The same hazards associated with flaming are also present with this technique.

### 9.5.5 Plasma Torch Decontamination

Plasma torches are predominantly used to weld and cut materials that either have a very high melting temperature or require an inert atmosphere to prevent oxidation (see Section 10.3.2.1). Nevertheless, the potential exists for the plasma torch to be used as a decontamination tool.

Potential uses in decontamination of materials include breaking down oils and PCBs into less harmful or harmless substances, achieving the rapid spalling of concrete, and delaminating contaminants from underlying substrates (using the difference in the thermal expansion coefficient). The torch's inert gas is recyclable and creates no additional waste stream of its own compared to the $CO_2$ and $NO_x$ product created by a combustion torch.

### 9.5.6 Electrical Resistance

This technique is a spalling technique that involves heating the steel reinforcing rods using electrical resistance or induction heating. This heating causes the bars to expand, which in turn induces the concrete to spall from the bars. This technique was in the developmental stages in the early 1980s, but no additional research has been reported since then.

### 9.5.7 Microbial Degradation

#### 9.5.7.1 Description of Technique

In this technique, a microbial solution is applied to the contaminated area with a spray gun, brush, or roller. The microbes are allowed to penetrate the surface and contact the contamination. When the microbes finish consuming the contaminant, a detergent or solvent wash removes the reaction products and most of the microbes. Drying should result in the destruction of the residual microbes; if not, heating or a chemical treatment such as acid wash or surfactant wash may be needed to inactivate the microbes. Finally, a wash with fresh solvent may be a necessary secondary treatment step to remove any remaining contaminants or derivatives.

All areas to be treated are first saturated with water and are kept wet throughout the treatment period. In this technique, dry spots cannot be decontaminated. A saturated gel or a soft, thick polyurethane foam can be used to keep the surface wet.

Contact with microbes could be hazardous to personnel. Protective clothing, eye protection, and respiratory protection such as a high-efficiency particulate filter mask should be worn by all workers.

### 9.5.7.2 Application

This method could be useful for the in situ detoxification of hazardous residues on walls and floors and in abandoned process equipment, storage tanks, sumps, piping, etc. Because microbes are specific to targeted contaminants, an extensive development effort is needed to achieve a workable system. Supplementary treatment probably would be required. Variations of this technique include the use of anaerobic microbes and the use of enzymes produced by cultured microbes to degrade contaminants.

Data on the effectiveness of microbial degradation as a building decontamination technique are not available. This technique has not yet been applied to building and equipment decontamination. Development could take 2–3 yr of research. Aerobic biodegradation has been successfully applied in lagoon, soil, and groundwater cleanups. Contaminants have included gasoline, oil sludges, phenolics, alcohols, acrylates, and solvents. This method has also been used to unclog city sewers and clean up oily wastewater in the bilges of the ship *Queen Mary*. In a laboratory situation, microbial degradation has been shown to be effective against pesticide contamination.

More information is needed on the optimum type of microbial organisms (e.g., aerobic versus anaerobic); on product identity, destruction efficiency, and kinetics of specific microbial reactions; and on the effect of microbes on building materials. This technique requires painting equipment (for application), storage and collection tanks, and heaters and/or dehumidifiers (for drying). Setup time should be low. Personnel time required for application to building surfaces should be equivalent to the time required for painting. Decontamination time depends on the kinetics of the microbial reaction and the mass transfer of microbes into porous materials (Esposito et al. 1985).

## 9.6 Conclusion

The various chemical, mechanical, and some emerging decontamination technologies that can be used on a decommissioning project are presented in this chapter along with a description of the technique and applications. Other emerging technologies include gas phase, laser-activated chemistry, electromigration, vapor-phase transport separation [available for research and development (R&D)], and gaseous decontamination (R&D). Discussions of these emerging technologies are not warranted at this time because of limited information and development. All the technologies presented in this chapter are summarized in tabular format to allow for simple comparisons regarding application effectiveness, advantages, and disadvantages.

## 9.7 References

Alfille, J. P., et al. 1989. "Polyjointed Robot with Integrated Laser Beam." *Decommissioning of Nuclear Installations: Proceedings of the 1989 International Conference*. Brussels, Belgium, October 24–27, 1989.

Allen, Arowsmith, Charlot and Hooper. 1978. *Electropolishing as a Decontamination Process: Progress and Applications*; PNL-SA-6858, Battelle, Pacific Northwest Laboratories, Richland, WA. April 1978.

Allen, R. P. 1985. "Nonchemical decontamination techniques," *Nuclear News*. June 1985.

Alpheus. Product information for $CO_2$ blasting.

Applied Radiological Control, Incorporated. January 1989. *A Review of Plant Decontamination Methods: 1988 Update*. EPRI NP-6169. Electric Power Research Institute.

Applied Radiological Control, Incorporated. Product Information for Wet Ice Blasting.

Avallone, E. A. and T. Baumeister, eds. 1978. *Marks' Standard Handbook for Mechanical Engineers*. 9th ed. McGraw-Hill. New York.

Ayers, J. A., 1970. *Decontamination of Nuclear Reactors and Equipment*. The Ronald Press Company, New York.

Bradbury, D., and W. J. Williams. 1988. "Decontamination of Magnox Boilers." *Proceedings of International Conference on Decommissioning of Major Radioactive Facilities*.

Carlson, A. B., et al. 1970. "Low Temperature Water Reactors." In Ayers 1970. Ayers, J. A., 1970. *Decontamination of Nuclear Reactors and Equipment*. The Ronald Press Company, New York.

Courtois, C., et al. 1991. "Decontamination Techniques for Dismantling." *Decommissioning Policies for Nuclear Facilities*. Proceeding of an International Seminar, Paris, October 2–4, 1991. Nuclear Energy Agency, Organization for Economic Co-Operation and Development.

Detilleux, E., et al. 1978. Experience Gained with the Decontamination of a Shut-down Reprocessing Plant." Presented at the International Symposium on the Decommissioning of Nuclear Facilities, Vienna, November 13–17, 1978.

DiDonato, B. June 24, 1993. Personal communication with Steve White.

Diercks, D. R. 1988. "Chemical Decontamination and Chemical Cleaning of LWR Components and Possible Interactions With Metallurgical Aging Effects." NUREG/CR-5180. [ANL-88-30]. Argonne National Laboratory.

EPRI (Electric Power Research Institute). November 1985. *New Decontamination Technique Utilizes a Self-Stripping Copolymer.* RP 1544-13. Electric Power Research Institute. Palo Alto, California.

Esposito, M. P., et al. March 1985. *Guide for Decontaminating Buildings, Structures, and Equipment at Superfund Sites.* EPA/600/2-85/028. Hazardous Waste Engineering Research Laboratory, Office of Research and Development. U.S. Environmental Protection Agency, Cincinnati.

Flescher, D. J. June 1, 1992. *Light Aided (Laser) Decontamination.* WHC-SD-WM-TI-518. Westinghouse Hanford Company, Richland Washington. June 1, 1992.

Flow International. Product information for ultra high-pressure water.

Guthrie, B. May 1993. "Foam Decontamination Technology Can Reduce Generated Waste by 70%." *D&D Technologies, The Decommissioning and Decontamination Briefing, Kaiser Engineers Hanford Company* 1.

IAEA (International Atomic Energy Agency). 1985. *Decontamination of Nuclear Facilities Operations, Inspection, Maintenance, Modification or Plant Decommissioning.* Technical Reports Series No. 249. Vienna

IAEA. 1988. "Decontamination and Demolition of Concrete and Metal Structures During the Decommissioning of Nuclear Facilities." In *Report of a Technical Committee Meeting on the Decontamination and Demolition of Concrete and Metal Structures During the Decommissioning of Nuclear Facilities Organized by the IAEA.* Technical Report Series 286. Vienna. August 1988.

K&S Engineering. Product information on jet edge.

Kaiser Engineers Hanford Company. May 1993. *D&D Technologies.* Vol. 1, Issue 1. Kaiser Engineers Hanford Company. Richland, Washington.

Kaiser, R., and O. K. Harling. March 1993. *Enhanced Removal of Radioactive Particles by Fluorocarbon Surfactant Solutions.* NRC-04-92-109. Entropic Systems, Inc. Winchester, Massachusetts. Prepared for the U.S. Nuclear Regulatory Commission. March 1993.

Katayama, Y. B., L. K. Holton, and R. M. Gale. May 1989. *324 and 325 Building Hot Cell Cleanout Program: Air Lock Cover Block Refurbishment.* PNL 6898. Battelle Memorial Institute. Richland, Washington.

Kleiber and Schultz. Product information on abrasive cleaning (Decomatt).

Koch, C. V., R. Gruner. December 1991. *Decontamination During Decommissioning.* Kerntechnik, Vol. 56 No. 6.

London Nuclear Decontamination Limited. *CAN-DECON: A Nuclear Reactor Decontamination Process.* Unnumbered report.

Loucks, C. M. 1970. "Cleaning and Defilming Arts in Industry." In Ayers 1970. *Decontamination of Nuclear Reactors and Equipment.* The Ronald Press Company, New York.

MacDonald Air Tool Corporation. Product information for scarifier. Hackensack, New Jersey.

Madden, K. D., Thomas, K. C. 1991. *Regulated Equipment Maintenance, Repair and Decontamination Facility Equipment, and Site Selection Study (u),* WSRC-RP-1132, Rev. 0., Westinghouse Savannah River Company, December 1991.

Meigs, R. A. 1987. "Use of Foam Chemical for Decontamination." *Proceedings of the International Decommissioning Symposium.* Pittsburgh, Pennsylvania, October 4–8, 1987, Ed. G. A. Tarcza.

Meservey, A. B. "Decontamination and Film Removal." In Ayers. Ayers, J. A., 1970. *Decontamination of Nuclear Reactors and Equipment.* The Ronald Press Company, New York.

MMES (Martin Marietta Energy Systems, Incorporated). February 26, 1993. *Oak Ridge K-25 Site Technology Logic Diagram.* K-2073. Vol. 3. Martin Marietta Energy Systems, Incorporated, Oak Ridge, Tennessee.

Munson, L. F., J. R. Divine, and J. B. Martin. 1983. *Planning Guidance for Nuclear Power Plan Decontamination.* NUREG/CR-2963. U.S. Nuclear Regulatory Commission. Washington, D. C.

NEA. March 1981. *Decontamination Methods as Related to Decommissioning Nuclear Facilities.*

Peach, M. J. and R. L. Skeleton. 1988. "Chemical Decontamination for Decommissioning." *Proceedings of International Conference on Decommissioning of Major Radioactive Facilities, Institute of Mechanical Engineers.* October 11–12, 1988.

Pentek, Product information for scarifier. Coraopolis, Pennsylvania.

Pettit, P. J., et al. 1978. "Decontamination of the Douglas Point Reactor by the CAN-DECON Process." Presented at the International Corrosion Forum, Houston, March 6–10, 1978.

Pick, M. E. and M. G. Segal. December 1983. "Chemical Decontamination of Water Reactors. CEGB Developments and the International Scene." *Nuclear Energy* 22:6.

Remark, J. F., and A. D. Miller. 1979. *Review of Plant Decontamination Methods.* RDTPL 79-35. Presented to the American Nuclear Society, Sun Valley Idaho, September 17–19, 1979.

Roller, M. A., et al. 1992. *Industrial-Scale Decontamination Using the DECOHA Process at Chernobyl.* Proceeding of the Symposium on Waste Management at Tucson, Arizona. March 1-5, 1992.

Sanders, M. J.; Turner, A. D. 1991. "Slides from Presentation on Electropolishing and Electrochemical Decontamination", Presented at SRS on January 18, 1991. Filed by W. N. Rankin, SRL/Interim Waste Technology.

Smee, J. L. *Dissolution Characteristics of Metal Oxides in Water Cooled Reactors.* London Nuclear Decontamination Limited, Niagara Falls, Ontario.

Speranzini, R. A., et al. September 1990. "CAN-DECON Makes a Strong Comeback as CAN-DEREM." *Nuclear Engineering International.*

Tucker, P. M. February 1993. "ELOMIX: A Better Way of Handling the Waste from Decontamination." *Nuclear Engineering International 38:463.*

Turco Products. Product information on turbulator/turculator. Westminster, California.

Turner, A., Steringer, A. 1988. *Electrochemical Decontamination in Easily Processed Electrolytes*, Studies performed under the 1984-1988 European Community Research programme on the Decommissioning of Nuclear Installations, 1988.

United Nuclear Corporation. November 25, 1968. "Decontamination Process Study." ES-1 of *UNC BONUS Specification 18248.*

Weed, R. D. "Decontamination—Historical Survey." In Ayers. Ayers, J. A., 1970. *Decontamination of Nuclear Reactors and Equipment.* The Ronald Press Company, New York.

Wheelbrator Corporation. Product information on shot blasting.

White, T. L., et al. 1992. "Removal of Contaminated Concrete Surface by Microwave Heating—Phase I Results." *Waste Management '92: Working Towards a Cleaner Environment.* Vol. 1. Proceedings of the Symposium on Waste Management at Tucson, Arizona, March 1–5, 1992.

Wood, C. J., B. Irving, and J. K. Allen. 1992. "Decontamination." In *Radioactive Waste Technology.* Eds. A. A. Moghissi, H. W. Godbee, and S. A. Hobart. American Society of Mechanical Engineers. New York.

# 10.0 Dismantling, Segmenting, and Demolition

# 10.0 DISMANTLING, SEGMENTING, AND DEMOLITION

The decommissioning of nuclear facilities largely involves the segmentation of metal components and the cutting and demolition of concrete structures. Various techniques have been used for segmenting and demolishing these components and structures, and new techniques are being developed continually. This chapter presents both proven and emerging techniques that can be used to accomplish these activities. The planner should be familiar with these techniques in order to integrate these activities with other decommissioning activities.

## 10.1 Overview

In most cases, dismantling and segmenting activities will precede the demolition of a building. Traditionally, *dismantling* (i.e., reverse assembly) refers to the physical disassembly, if necessary, of equipment (e.g., piping, pumps, tanks) in buildings or other areas (e.g., hot cell, pump room, laboratory). Unlike dismantling, which leaves the equipment parts intact, *segmenting* (i.e., size reduction) refers to cutting a piece of equipment into smaller parts using some type of blade, explosive, or other means before removal. Although dismantling and segmenting usually are used for the equipment inside of a building, they can also be applied to the building's structure (e.g., walls). Because dismantling and segmenting activities achieve similar ends, and because these terms are sometimes used interchangeably, they are discussed in the same section (i.e., Section 10.3). *Demolition* refers to activities performed to completely raze a building—to reduce it to rubble.

Prior to the dismantling or segmenting of any component, all utilities to the component (e.g., sources of water, electric power, steam) must be disconnected to ensure the safety of personnel involved. For contaminated or radioactive areas, the work area should be isolated and sealed, and access into and out of the area should be controlled. Contaminated loose debris should be removed, and a light water spray can be used to reduce airborne particulates when employing techniques that produce aerosols and/or dust. If possible, major components can be removed and then dismantled in a larger nonhazardous work area. Various segmenting processes are available, some of which can be performed with the equipment in place and some of which can be performed in centralized work areas. It should be noted that some contaminants and building materials are potentially combustible, and precautions should be taken to prevent combustion when spark- or friction-producing tools are to be used.

The planner may want to consider the potential reuse of a building for the decommissioning project itself. For example, a warehouse can be used as a laydown and/or sorting area for contaminated components prior to the decontamination process or as a centralized segmenting station.

Systems such as electric, HVAC, and potable water distribute commodities through transmission lines that are supported by pipe/conduit racks or trays; building walls, floors, and ceilings; or process equipment. Left in place, these systems generally interfere with the dismantling of major equipment, buildings, and support structures. A site-specific cost benefit analysis should be

prepared in order to determine whether to dismantle these systems early in the program. For example, there are many situations in which temporary lighting, ventilation, and electrical power lines are difficult and costly to install once the original utility service has been removed.

## 10.2 Process Selection

Table 10.1 presents information concerning the segmenting of piping, tanks, and miscellaneous components, and summarizes useful processes as a function of material, material thickness, cutting environment (in air or underwater), and safety concerns. Table 10.2 presents information concerning cutting and demolishing concrete. This information should permit the planner to make a preliminary selection of a process or processes.

The most effective way to perform many operations is manual labor, especially because workers, unlike an automated system, can provide sensory feedback. If an overall reduction in time and cost can be achieved, however, it may be economically advantageous to procure a specialized piece of equipment as long as it does not become useless if the job changes (Brant 1989).

Experience gained from completed or ongoing dismantling activities at various facilities has shown that it is usually most efficient to segment pipes or pumps and valves by hand using conventional methods. Tools such as electric reciprocating saws, portable bandsaws, pipe cutters, and hydraulic shears are preferred by operators because of their lightweight, and swift and efficient operation, especially for piping. An added benefit is that these tools minimize the release of contaminated vapors or filings.

It has been shown, at Japan Power Demonstration Reactor (JPDR), that the labor required for hands-on dismantling is somewhat proportional to the weight of components to be dismantled. Figure 10.1 shows the relationship between weight and workhours, from which unit factors can be extracted for labor estimation. It is important to keep in mind that worker productivity decreases not only in congested areas, as indicated in Figure 10.1, but also under other difficult working conditions. For example, a person working in a full-face respirator and PPE must endure restricted movement and, depending on environmental conditions, potential heat stress. In an instance such as this, the planner would necessarily consider how concerns for worker safety and worker mobility may impact the overall work schedule.

Dismantling methods should be chosen based on the following major factors: radiological criteria, availability or adaptability of suitable equipment, knowledge of problems to be tackled, time available, and cost-effectiveness of proposed solutions. An important consideration from a radiological viewpoint is to limit the exposure of workers in controlled areas. This can be accomplished by any one or more of the following actions: limiting the hours (e.g., speed of operation), increasing distance from source, and/or employing shielding. In a contaminated area (other than radiation) where workers must wear PPE, simple hand tools should be used. In general, the equipment chosen should be easy to use, familiar, reliable, well constructed, and proven. It should be capable of being used manually and adapted for remote use, keeping in

# Table 10.1. Summary of Application for Metal Cutting

| TECHNIQUE | SECTION | ENVIRONMENT* | APPLICATIONS† MATERIAL | PRESSURE VESSELS, FLAT STOCK, ETC. THICKNESS (inches) | PIPING DIAMETER | TANK DIAMETER | MISCELLANEOUS (BAR STOCK, ANGLE IRON, I-BEAMS, CHANNEL IRON) | MODES‡ | POWER SUPPLY** | SUPPORT SERVICES†† | FIRE HAZARD‡‡ | SAFETY CONCERNS*** | SECONDARY WASTES††† | COMPLEXITY‡‡‡ | DEMONSTRATED SUCCESS° | REMARKS |
|---|---|---|---|---|---|---|---|---|---|---|---|---|---|---|---|---|
| NIBBLERS and SHEARS | 10.3.1.1 | A, U | All metals | 1/4 | 2 in | Not practical | Possible | P, R, S | P, E, H | | | | | L | Y | Small diameter piping |
| MECHANICAL SAWS (HACKSAW, RECIPROCATING, GUILLOTINE) | 10.3.1.2 | A, U | All metals | | ≤ 24 in | Not practical | Can be adapted for bar, angle or channel | P, R, S | P, E, H | | | 7 | F | L | Y | Slower than other methods |
| CIRCULAR CUTTERS | 10.3.1.3 | A, U | All metals | ≤ 3 | ≥ 6 in | All | Not applicable | P, R | P, H | | | | F | L | Y | Contamination control by vacuuming chips |
| ABRASIVE CUTTERS | 10.3.1.4 | A, U | All metals | ≤ 6 | All | All | Any shape | P, R, S | P, E, H | | Y | 7, 9 | F | L | Y | |
| DIAMOND WIRE | 10.3.1.6 | A, U | All metals | Unlimited | All diameters heat exchanger tube bundles | All | Not applicable | R | D, E, H | | | 7, 8 | F | M | Y | Access to both sides of the material is necessary. |
| EXPLOSIVE CUTTING | 10.3.1.7 | A | All metals (1) | ≤ 6 | All | All | Expensive technique to be used selectively when other techniques are not feasible | R | O | | Y | 1, 5, 6, 7, 9 | | H (1) | Y | Spread of radioactive material; blast effect on mechanical integrity |
| PLASMA ARC CUTTING | 10.3.2.1 | A, U | CS, SS, Al, | ≤ 7 (2) | All | All | Any shape, if cutting is made to follow shape of component | P, R, S | E | F | Y | 1, 9 | | H | Y | Required relief space behind workpiece. Underwater application is limited to 65 ft below surface. |
| | | | Zr, I | ≤ 4 | | | | | | | | | | | | |
| OXYGEN BURNER | 10.3.2.2 | A, U | CS (3) | ≤ 48 | All | All | Any shape | P, R, S | | O, F | Y | 2, 9 | | L | Y | Radioactive fumes |
| THERMITE REACTION LANCE | 10.3.2.4 | A, U | All metals | ≤ 6 ≥ 3 | | | Gross cutting technique especially suited for cutting reinforcing rods | P | | O | Y | 1, 9 | | M | | Flow path necessary for removal of molten material. Adequate ventilation is required. May be used in limited applications for very thick pipe walls or special pipe construction, or access limitations such as reactor nozzles. In underwater applications large amounts of bubbles may impair operator's visibility. |

## Table 10.1. Summary of Application for Metal Cutting (continued)

| TECHNIQUE | SECTION | ENVIRONMENT* | APPLICATIONS† PRESSURE VESSELS, FLAT STOCK, ETC. MATERIAL | THICKNESS (inches) | PIPING DIAMETER | TANK DIAMETER | MISCELLANEOUS (BAR STOCK, ANGLE IRON, I-BEAMS, CHANNEL IRON) | MODES‡ | POWER SUPPLY** | SUPPORT SERVICES†† | FIRE HAZARD‡‡ | SAFETY CONCERNS*** | SECONDARY WASTES††† | COMPLEXITY‡‡‡ | DEMONSTRATED SUCCESS§ | REMARKS |
|---|---|---|---|---|---|---|---|---|---|---|---|---|---|---|---|---|
| ARC SAW | 10.3.2.5 | A, U | CS, SS, Al<br>Zr<br>I | 40<br>12<br>4 | Limited to 1/3 blade diameter | All | Not practical | R, S | H, E | | | 1, 9 | F | H | Y | Space needed for blade diameter; significant amount of smoke. |
| ABRASIVE WATER JET | 10.3.3 | A, U | All metals | ≤ 9 | All | All | Any shape | S, R | H | | | 3, 4, 9 | F | M | | Short nozzle life; large quantities of water and abrasives. A 30-40% reduction in depth of cut during underwater application. |
| MOBILE SHEARS | 10.4.1.3 | A, U | All metals | 1 1/4 in | All | Above and below grade tanks | Any shape | R | H | | | 1, 9 | | M | | Attachment to excavator; accessibility to indoor equipment a problem. |
| ELECTRO DISCHARGE MACHINING (EDM) | 10.5.2 | A, U | All metals | | | | | S, R | E | | | | F | M | | Under development. |
| METAL DISINTEGRATION MACHINING (MDM) | 10.5.3 | A, U | All metals | | | | | S, R | E | | | | F | M | | Under development. |
| LASER CUTTING | 10.5.4 | A | All metals | | | | | R, S | E | G | Y | 9 | | H | | Under development; not powerful for thick sections and not portable for field use; costly. |

## Table 10.1. Footnotes

* Cutting environment: A = air, U = underwater.

† Materials: CS = carbon steel, SS = stainless steel, Al = aluminum, Zr = zirconium, and In = Inconel.

Notes:

(1) Limited access or other circumstances may dictate application of explosive cutting. The effect of detonation shock wave must be considered.
(2) Underwater applications limited to thicknesses less than 4 in.
(3) When cutting carbon steel clad with stainless steel, the stainless steel may be gouged with an electric arc to expose the carbon steel.

‡ Recommended operating modes:
Portable (P)—Personnel bring the cutting equipment to the components being segmented.
Remote (R)—Remotely operated mechanisms are required to segment components.
Stationary (S)—Material is brought to a centralized workstation for segmenting.

** Means by which equipment is driven: electric (E), pneumatic (P), hydraulic (H), gasoline (G), diesel (D), and other (O).

†† Services required to start and/or sustain cutting operations: F = fuel gas, O = oxygen, G = gas (other).

‡‡ Does the technique produce flames or sparks that could potentially ignite combustibles? Y = yes, N = no.

*** Other safety concerns that may be associated with the use of this equipment:
1 = high noise levels.
2 = underwater cutting is limited to a depth of 35 ft (15 psig) when using oxyacetylene fuel because of the explosive instability of acetylene under pressure.
3 = abrasives may wear away piping in a recycle system, causing leakage of radioactive fluids.
4 = extremely powerful jet.
5 = shock wave.
6 = blasting particles.
7 = eye hazard.
8 = potential personnel hazard if wire breaks.
9 = airborne contamination potential.

††† Secondary wastes produced by the operation that may potentially pose a cross contamination hazard or personnel hazard: F = fluids (i.e., cutting, cooling, lubricating or dielectric fluid).

‡‡‡ Low (L)—Equipment is commercially available and/or requires little or no special training.
Medium (M)—Equipment is commercially available and requires some special training.
High (H)—Equipment is specially designed and/or requires highly skilled and trained personnel.

Note: (1) Requires a certified blasting technician.

◊ Has the technique been used successfully on three or more decommissioning projects? Y = yes, N = no.

# Table 10.2. Summary of Application for Cutting and Demolition of Concrete

| TECHNIQUE | SECTION | ENVIRONMENT* | APPLICATIONS: HEAVILY REINFORCED MASSIVE CONCRETE (BIOLOGICAL SHIELDS, BASEMATS, FOUNDATIONS, WALLS > 2 FT THICK) | HEAVY, MASSIVE CONCRETE - METAL OR MAGNETITE AGGREGATE, NONREINFORCED (BIOLOGICAL SHIELDS, ≤ 2 FT THICK) | LIGHTLY REINFORCED OR NONREINFORCED WALLS AND FLOORS (≤ 2 FT THICK) | MODES† | POWER SUPPLY‡ | SUPPORT SERVICES** | FIRE HAZARD†† | SAFETY CONCERNS‡‡ | SECONDARY WASTES*** | COMPLEXITY††† | DEMONSTRATED SUCCESS° | REMARKS |
|---|---|---|---|---|---|---|---|---|---|---|---|---|---|---|
| WALL and FLOOR SAWS | 10.3.1.5 | A | Not applicable | Suitable | Suitable | P, R | P, E, H | | N | 7,9 | F | L | Y | For removal of entire wall or floor sections; dust controlled by water spray and envelope. Depth of cut is limited to 1/3 of blade diameter. Can cut slits. |
| DIAMOND WIRE | 10.3.1.6 | A | Suitable | Suitable | Suitable | R | E, H | | N | 7,8 | F | M | Y | Thickness is virtually unlimited. However, access to both sides of material is required; high potential for spread of contamination. Metal aggregate may tear diamonds from wire and excess wire wear. |
| EXPLOSIVE CUTTING | 10.3.1.7 | A | For beams only; not suited for long slabs | Not applicable | For beams only; not suited for long slabs | R | O | | Y | 1,5, 6,9 | F | H (1) | Y | Used when geometry of object is too complex for other methods or where several cuts must be made simultaneously. |
| CORE / STITCH DRILLING | 10.3.1.8 | A | Not recommended | Not recommended | Slow; rebar must be cut after fracture; rock splitter required. | P | E, H | | N | 7,8, 9 | F | L | Y | Used where surroundings must not be disturbed or access is limited. However, this process is not used much since the introduction of diamond wire. Drill diameters up to 60 in. |
| FLAME CUTTING | 10.3.2.3 | A, U | Suitable | Suitable | Suitable | P, R | | O, F | Y | 1,9 | | M | | Generates large quantities of toxic gas and smoke. Use only where adequate ventilation is available. In underwater application large amounts of bubbles may impair operator's visibility. |
| THERMITE REACTION LANCE | 10.3.2.4 | A, U | Suitable | Suitable | Suitable | P | | O | Y | 1,9 | | M | Y | Generates large quantities of toxic gas and smoke. Use only where adequate ventilation is available. Vertical cuts are more difficult because of molten material at bottom of hole. |

## Table 10.2. Summary of Application for Cutting and Demolition of Concrete (continued)

| TECHNIQUE | SECTION | ENVIRONMENT * | APPLICATIONS: HEAVILY REINFORCED MASSIVE CONCRETE (BIOLOGICAL SHIELDS, BASMATS, FOUNDATIONS, WALLS > 2 FT THICK) | HEAVY, MASSIVE CONCRETE - METAL OR MAGNETITE AGGREGATE, NONREINFORCED (BIOLOGICAL SHIELDS, ≥ 2 FT THICK) | LIGHTLY REINFORCED OR NONREINFORCED WALLS AND FLOORS (≤ 2 FT THICK) | MODES † | POWER SUPPLY ‡ | SUPPORT SERVICES ** | FIRE HAZARD †† | SAFETY CONCERNS ‡‡ | SECONDARY WASTES *** | COMPLEXITY ††† | DEMONSTRATED SUCCESS° | REMARKS |
|---|---|---|---|---|---|---|---|---|---|---|---|---|---|---|
| ABRASIVE WATER JET | 10.3.3 | A, U | Depth of cut will be deeper where there is concrete only; therefore, multiple passes may be required. | May require multiple passes. | Depth of cut will be deeper where there is concrete only; therefore, multiple passes may be required. | R | H | | N | 1,3, 4,9 | F | M | | Large amounts of contaminated water containing abrasives and concrete. A 30-40% reduction in depth of cut during underwater application. |
| CONTROLLED BLASTING | 10.4.1.1 | A | Rebar must be cut after fracture. | Metal aggregate slows drilling process. | Costly for this application | R | O | | Y | 1,5, 6,9 | F | H (1) | Y | Shock/noise levels can be moderated with controls; contamination controls with blasting mats and fog spray. |
| WRECKING BALL OR WRECKING SLAB | 10.4.1.2 | A | Not recommended | Not recommended; slow | Suitable | R | | | N | 9 | | H | Y | Maximum drop height is 110 ft; maximum swing height is 50 ft. Not recommended for radioactive structures. Suitable for breaking rubble. |
| CABLE -SUSPENDED AND EXCAVATOR-MOUNTED ATTACHMENTS | 10.4.1.3 | | | | | | | | | | | | | Recommended where access is limited for wrecking ball; blasing not permitted or control of debris is required. Not recommended for radioactive structures. |
| BACKHOE-MOUNTED RAMS | | A | Not recommended; slow; rebar must be cut. | Suitable | Suitable | R | H, P | | N | 1,9 | F | M | | Dust and contamination control with a fog spray. Cannot reach tall structures; maximum reach is 20 ft; rebar must be cut. |
| UNIVERSAL PROCESSOR | | A, U | Slow; can cut and separate rebar and embedded steel. | Slow | Can cut and separate rebar; height limited by crane boom | R | H | | N | 1,9 | F | M | | Dust and contamination control with a fog spray. Interchangeable attachments for different applications. |
| EXPANSIVE GROUT | 10.4.1.4 | A | Slow; rebar must be cut after fracture. | Slow; metal aggregate slows drilling process. | Slow; rebar must be cut after fracture | P | H, P | | N | 9 | F | L | Y | Recommended where noise and vibration must be controlled or access is limited. Backhoe requried to separate rubble. |

## Table 10.2. Summary of Application for Cutting and Demolition of Concrete (continued)

| TECHNIQUE | SECTION | ENVIRONMENT * | APPLICATIONS: HEAVILY REINFORCED MASSIVE CONCRETE (BIOLOGICAL SHIELDS, BASEMATS, FOUNDATIONS, WALLS > 2 FT THICK) | HEAVY MASSIVE CONCRETE - METAL OR MAGNETITE AGGREGATE, NONREINFORCED (BIOLOGICAL SHIELDS, ≤ 2 FT THICK) | LIGHTLY REINFORCED OR NONREINFORCED WALLS AND FLOORS (≤ 2 FT THICK) | MODES † | POWER SUPPLY ‡ | SUPPORT SERVICES ** | FIRE HAZARD †† | SAFETY CONCERNS ‡‡ | SECONDARY WASTES *** | COMPLEXITY ††† | DEMONSTRATED SUCCESS° | REMARKS |
|---|---|---|---|---|---|---|---|---|---|---|---|---|---|---|
| ROCK SPLITTER | 10.4.1.5 | A | ≤ 1 ft; slow; rebar must be cut after fracture. | Slow; metal aggregate slows drilling process. | Slow; rebar must be cut after fracture. | P | H, P | | N | 9 | F | L | Y | Recommended where noise and vibration must be controlled or access is limited. Backhoe requried to separate rubble. |
| PAVING BREAKER and CHIPPING HAMMER | 10.4.1.6 | | Not recommended; very slow | Not recommended; very slow; difficult to achieve penetration | ≤ 1 ft; slow | P | P, H | | N | 1,7, 9 | D,F | L | Y | |
| LIQUIFIED GAS CUTTING | 10.5.1 | | | | | | | | | | | | | Under development |
| LASER CUTTING | 10.5.4 | A | | | | R, S | E | G | Y | | | H | | Under development |
| SHAPE MEMORY ALLOYS | 10.5.5 | A | | | | | | | | | | | | Under development |

## Table 10.2. Footnotes

* Cutting environment: A = air, U = underwater.

† Recommended operating modes:
Portable (P)—Personnel bring the cutting equipment to the components being segmented.
Remote (R)—Remotely operated mechanisms are required to segment components.
Stationary (S)—Material is brought to a centralized workstation for segmenting.

‡ Means by which equipment is driven: electric (E), pneumatic (P), hydraulic (H), gasoline (G), diesel (D), or other (O).

** Services required to start and/or sustain cutting operation: F = fuel gas, O = oxygen, G = gas (other).

†† Does the technique produce flames or sparks that could potentially ignite combustibles? Y = yes, N = no.

‡‡ Other safety concerns that may be associated with the use of this equipment:

1 = high noise levels.
2 = underwater cutting is limited to a depth of 35 ft (15 psig) when using oxyacetylene fuel because of the explosive instability of acetylene under pressure.
3 = abrasives may wear away piping in a recycle system, causing leakage of radioactive fluids.
4 = extremely powerful jet.
5 = shock wave.
6 = blasting particles.
7 = eye hazard.
8 = potential personnel hazard if wire breaks.
9 = airborne contamination potential.

*** Secondary wastes produced by the operation that may potentially pose a cross contamination hazard or personnel hazard: F = fluids (i.e., cutting, cooling, lubricating or dielectric fluid), and D = dust.

††† Low (L)—Equipment is commercially available and/or requires little or no special training.
Medium (M)—Equipment is commercially available and requires some special training.
High (H)—Equipment is specially designed and/or requires highly skilled and trained personnel.

Note: (1) Requires a certified blasting technician.

◊ Has the technique been used successfully on three or more decommissioning projects? Y = yes, N = no.

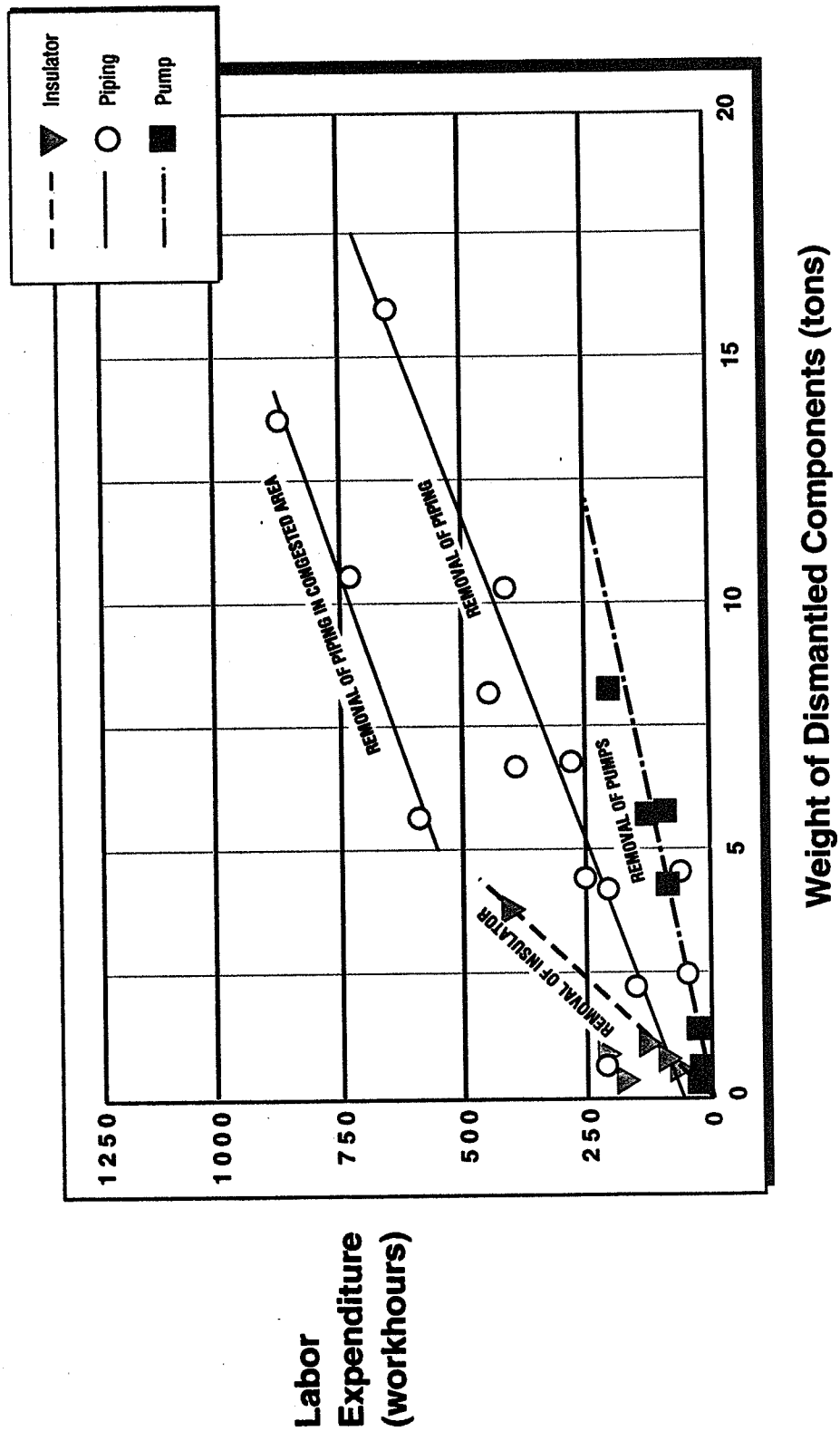


Figure 10.1. Relationship between labor expenditure and weight of dismantled components

mind that setting up and removing remote systems requires workers to be in a radiation area and may take longer than performing the dismantling manually.

Unforeseen problems are encountered in every project. Equipment may be rendered useless or ineffective when a problem occurs, and another piece of equipment must be procured and/or modified. When a problem is encountered, the solution should be kept simple—development of new equipment and techniques is not practical and requires additional time, which delays the project. It is important to use as-built drawings and surveys as much as possible in order to limit potential problems. However, even the use of as-built drawings cannot prevent problems from occurring. For example, at PPA, expansive grout was used to cause cracking along a plane that separated the activated concrete from the less activated concrete. The procedure was to cause cracking along the plane overnight, with the activated concrete slab falling away from the rest of the wall or ceiling by morning. However, the first test piece did not perform as expected. Examination showed that the expansive grout had indeed broken the concrete along the expected plane, even though the slab was still firmly attached to the remaining concrete. Once the two pieces were pried apart, it was clear that form ties not indicated by the as-built drawings were causing the problem. These ties, which were 1/4–3/8 in. in diameter and were used to hold the wood forms in place during construction, were sufficient to prevent the separation of the concrete pieces.

## 10.3 Detailed Description of Dismantling/Segmenting Techniques

As indicated by Table 10.1, the dismantling/segmenting techniques are grouped into three categories: mechanical, thermal, and other. The breakdown follows.

- Mechanical
  - nibblers and shears,
  - mechanical saws,
  - circular cutters,
  - abrasive cutters,
  - wall and floor saws,
  - diamond wire,
  - explosive cutting, and
  - core/stitch drilling.
- Thermal
  - plasma arc,
  - oxygen burning,
  - flame cutting,
  - thermite reaction lance, and
  - arc saw.

- Other
  - abrasive water jet.

### 10.3.1 Mechanical Cutting Techniques

The techniques described in the following sections use mechanical forces and/or motions to cut various components (e.g., structures, piping) that may be encountered during decommissioning. The mechanical motions (reciprocating, circular) and forces (shear) are usually driven electrically, pneumatically, or hydraulically, resulting in the cutting and/or breaking of the component.

#### 10.3.1.1 Power Nibblers and Shears

**Description of Technique**

A nibbler is a punch and die cutting tool that normally operates at a rapid reciprocation rate of the punch against the die, "nibbling" a small amount of sheet metal workpiece with each stroke. This process is ideal for cutting intricate shapes and turning corners.

A shear is a two-bladed or two-cutter tool that operates on the same principle as a conventional pair of scissors. A bladed shear primarily is used for in-line cutting of sheet metal, and a rotary shear is capable of producing irregular or circular cuts.

One of the most common type of pneumatic shears, known as the *jaws of life*, is used primarily by emergency response personnel to extricate victims of automobile wrecks. On an even larger scale, mobile shears mounted on an excavator and operated by the excavator's hydraulic system are available.

**Applications**

**Thick Metallic Components or Structures**

Heavy-duty power nibblers and shears attached to long support tubes can be utilized for remote cutting of mild steel and stainless steel components. Heavy-duty shears have a cutting speed of 15–20 ft/min and capacities of 0.187 in. (7 gauge) for cutting mild steel and 0.172 in. (8 gauge) for cutting stainless steel. The cutting speed of heavy-duty nibblers is 4 ft/min, and their cutting capacities are a 1/4-in. plate for mild steel and 0.187 in. (7 gauge) for stainless steel. Electric nibblers and shears can be used for remote dry applications with a power takeoff, and pneumatic nibblers and shears can be used for remote underwater and in air applications. For underwater applications, the standard nibbler or shear can be adapted with an exhaust manifold that blows exhaust away from the cut. This eliminates air bubbles at the cutter, thereby improving operator visibility. A typical pneumatic shear arrangement is shown in Figure 10.2.

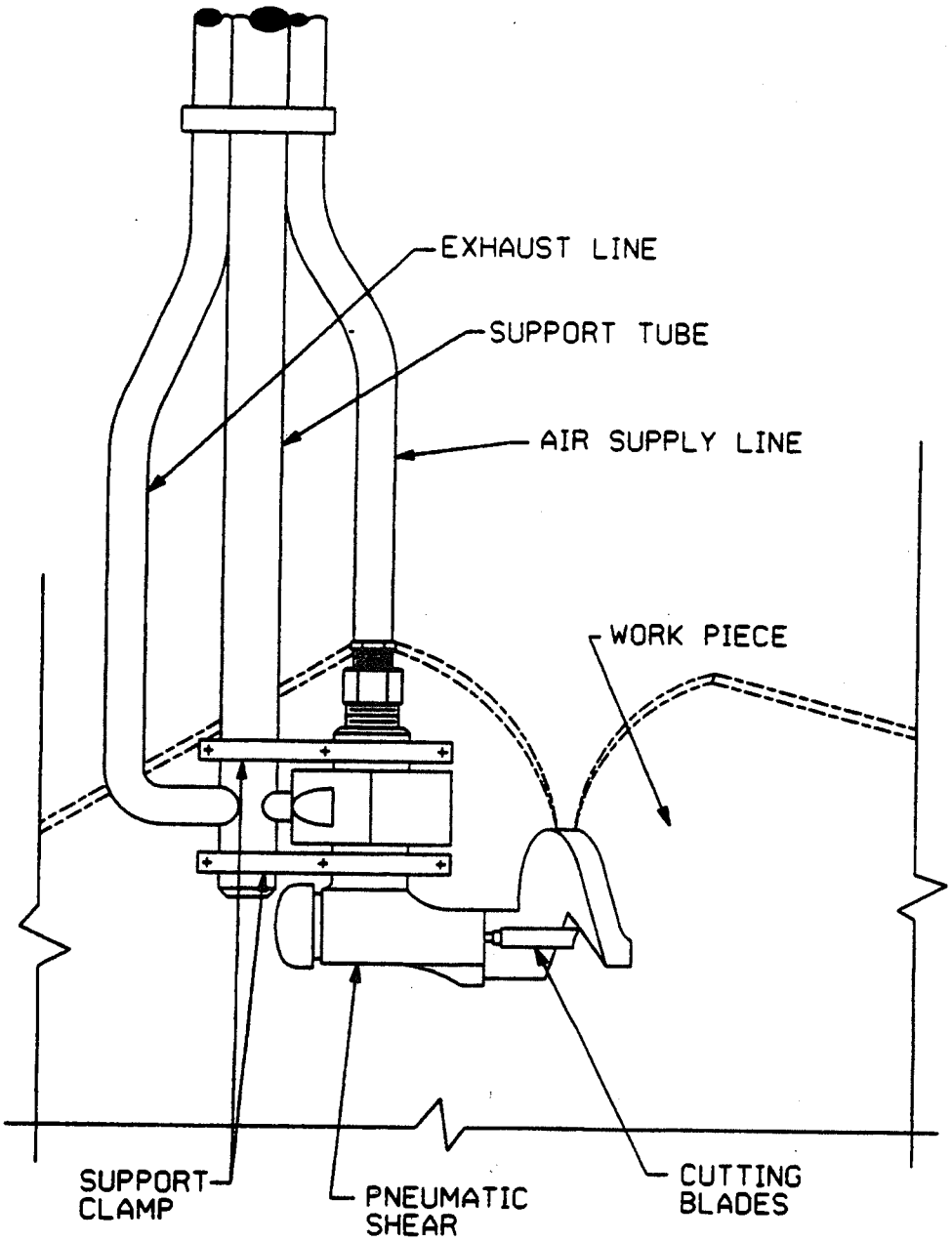


**Figure 10.2. Typical pneumatic shear arrangement**

During the Elk River dismantling program, a core shroud was segmented into shippable sections using a remotely operated sheet metal cutting pneumatic nibbler under water. The materials of the two-piece shroud were 3/32-in. stainless steel and 1/16-in. zircaloy. Numerous cuts up to 5 ft in length were made. The operating air pressure of the nibbler was increased from the manufacturer's recommended 50–90 psig in order to achieve satisfactory segmenting of hardened stainless steel. The chisel lifetime for this operation was 30 linear feet (lf) of stainless steel (Nemec, Beckers, and Blumberg 1973).

In another instance, a remotely operated underwater pneumatic shear was used for segmenting a 16-gauge (0.0625-in.) stainless steel core shroud from the LaCrosse Boiling Water Reactor pressure vessel. Louvers on the shroud prevented direct access to the 16 hold-down bolts. The pneumatic shear was used to make vertical cuts in the shroud on each side of the louvered panels. Twenty-four vertical cuts, each of which was approximately 17-in. long, were made in the shroud. The shear worked freely when unobstructed by louvers; however, in areas where there were louvers, the shear would jam if the lower blade contacted the shear anvil. When the shear was stopped by the louvers or the cutting became difficult, the downward force on the shear was increased to complete the cut. While the increased force did complete the cut, however, it also caused the shear blades to loosen.

**Piping and Components**

In addition to the cutting of thin sheets, the power shear is also applicable to the cutting of small bore piping and tubing and, in some instances, can be used to segment tanks. The large mobile shears are capable of cutting 1/4-in.-thick steel and can be used on structural steel, large-diameter piping, and above- and below-grade tanks. The use of the mobile shear is limited to outdoor operation where components can be transported to an area for segmenting.

Facilities at which shears have been used include AT1 in France and British Nuclear Fuels Limited (BNFL) in Britain. During decommissioning of AT1, a narrow and modest-capacity piping system located in the cells was cut using hydraulic shears (among other mechanical means), thereby avoiding the problem of airborne contamination from thermal cutting processes. At the BNFL coprecipitation plant, a crimp/shear tool was used to cut contaminated piping. Hundreds of cuts were made with this tool, most of them on 1/2-in. pipe. The tool was also used on 1-in. pipe, although there was a marked reduction in blade life [Nuclear Energy Agency (NEA) 1992].

### 10.3.1.2 Conventional Mechanical Saws

**Description of Technique**

Hacksaws, guillotine saws, and reciprocating-action saws are relatively common industrial tools used for cutting all metals with a reciprocating-action, hardened-steel saw blade. These saws use mechanical methods for segmentation rather than thermal methods. This offers two distinct advantages: a reduction in fire hazards and an increase in the control of radioactive

contamination (because there are no fumes or gases). These saws are frequently selected for cutting piping systems because of their low operating cost, high cutting speed, and ease of contamination control. They can be applied in either portable (handheld or remote) or stationary models.

Although chain saws with diamond chains/blades could be included in this category, their use would be limited on a decommissioning project. Contamination control would be difficult, as compared with either a hacksaw or a guillotine because the action of the chain tends to spread the swarf around the work area, thereby posing a safety hazard to workers whether the swarf is contaminated or not. The remaining portion of this section focuses on the reciprocating-action saws.

Portable power hacksaws are clamped with a chain to a pipe in such a position that the blade contacts the underside of the pipe. This allows the weight of the motor to advance the blade into the workpiece around the chain-mounted pivot point. An operator may increase the feed pressure manually by applying downward force on the motor body or by suspending weights from the body. In general, blade lubrication is not necessary.

A portable guillotine saw is also clamped by chain to a pipe, but in this instance the saw and motor are mounted above the cut, allowing the weight of the unit to advance the saw into the workpiece. Blade lubrication generally is not necessary. Figure 10.3 shows a photo of an air-powered guillotine saw. Motors for either type of portable saw may use air or electricity as a power source.

A power reciprocating-action saw is similar to a power hacksaw except that one end of the blade is free. At PNL, a standard industrial pneumatically powered reciprocating saw was equipped with a special pneumatic clamp and a pneumatic feed system to hold the saw against the workpiece.

The light weight and compact size of these saws and the ease with which they are mounted reduces setup time for cutting, and once positioned, either saw will operate without operator assistance. These features make these saws ideal for reducing operator exposure when cutting activities are performed in zones where high-level radioactive contamination is present.

Hacksaws may also be used in stationary applications in which a large, rigid bed is used to hold the workpiece and a reciprocating bow is used to hold the saw blade cutting the work. These saws are larger, more powerful, and faster than the portable saws. Their blades are provided with a lubricating spray that must be recycled or filtered to remove contamination (E.H. Wachs Company).

## Applications

Portable power hacksaws can cut piping up to 14 in. in diameter. Cutting time varies with the material being cut, the use of a lubricant (if any), and the force applied to the blade. As a

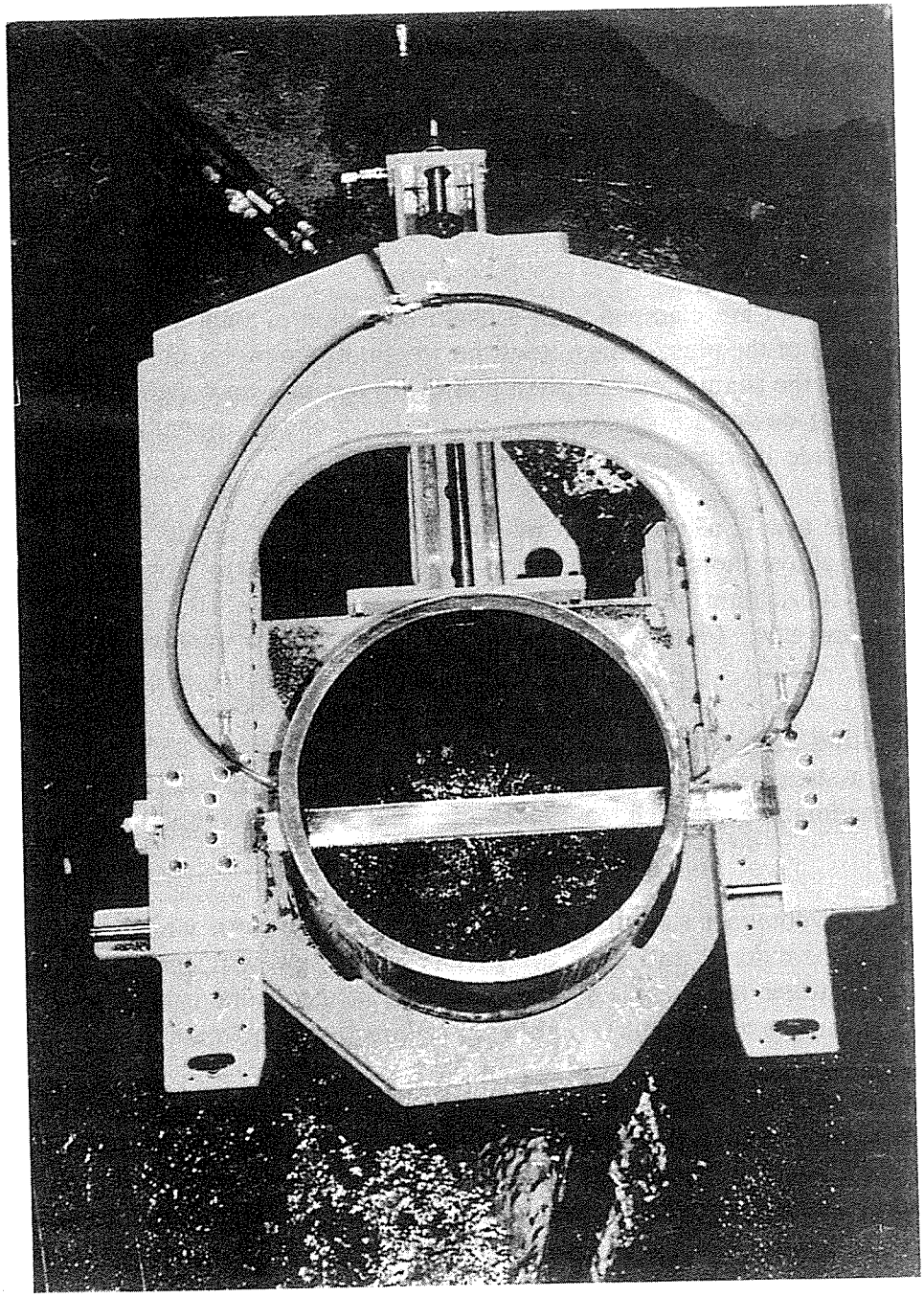

**Figure 10.3. Portable air-powered guillotine saw**

general rule, an 8-in.-diameter, schedule 40 pipe can be cut in 6–10 min with a power hacksaw. Hacksaws weigh approximately 15 lb and therefore are easily positioned by one operator. With a blade length of 8–24 in. (plus the 24-in. length of the power unit), they are relatively small and fit easily into constricted areas. Pneumatic models consume 30–50 scfm of air at 90 psig, while electric models require 750 kW.

Guillotine saws are capable of cutting pipe from 2 to 24 in. in diameter. Cutting speed is approximately 1–1 1/2 min for each inch of pipe diameter based upon schedule 40 pipe. Small guillotine saws weigh 120 lb and are typically positioned by two operators; larger guillotine saws may weigh as much as 515 lb and are positioned mechanically.

During early cutting activities at Shippingport, hacksaws and guillotine saws were used. Although the saws worked effectively and relatively quickly for aluminum pipe, they were slow and the motors overheated and burned out when used on carbon steel. The saws were virtually useless on stainless steel pipe. For example, one 6-in. stainless steel pipe required 20 blades to complete the cut. Thereafter, stainless and carbon steel were cut using plasma arc cutting, although oxyacetylene cutting was occasionally used for carbon steel.

Large stationary hacksaws, however, can be effectively used in decommissioning activities if a central cutting station is established. These saws, which can weigh up to 5 tons, are not easily moved once installed. They have cutting speeds of 14 in.$^2$/min in mild steel stock and 17 in.$^2$/min in pipe, ideal for cutting large quantities of material, and have a three-phase electric motor that can generate up to 40 hp and can cut material as thick as 25 in. In a cutting station, these saws can be used to finish-cut long lengths of pipe into shorter pieces for packaging and shipping. The effectiveness of a stationary hacksaw for decommissioning depends upon numerous site-specific variables. Included among these are the cost of labor, the quantity of material to be cut, the radiation levels of the material, and exposure-level durations. Locating the cutting station near the decommissioning activities automatically reduces the costs and exposures associated with rigging and moving long sections of pipe.

At PNL, a reciprocating-action saw was modified for remote operation so that components in a hot cell could be segmented. Using the overhead crane in the cell, the saw was remotely attached to pipes, beams, or other equipment protrusions. Because of the pneumatic feed system, the saw would operate equally well in any position, including upside down. This versatility in placement and operating position saved substantial time and cost compared with the use of a plasma arc torch and other faster cutting devices because the latter require extensive repositioning of the equipment within the cell to provide adequate operator access with the manipulators. Labor costs were also minimized despite the saw's slow cutting rate because it could operate with little operator attention. Moreover, the pneumatic drive was immune to damage from stalls, and the system was designed to automatically shut off at the completion of each cut. The only required maintenance was periodic blade replacement, approximately once per shift.

### 10.3.1.3 Circular Cutters

**Description of Technique**

A circular cutting machine is a self-propelled unit that cuts as it moves around the outside circumference of a pipe on a track. The machine may be powered either pneumatically, hydraulically, or electrically and is held to the outside of the pipe or component by a guide chain that is sized to fit the outside diameter. A guide ring is available if very precise cuts are necessary.

The blades on a circular cutting machine are made of hardened steel, and their number may be varied to change the thickness of the cut. If a beveled cut is required, special cutters are available. These saws can be used to cut pipe walls that are as thick as 3 in. with outside diameters ranging from 6 in. to 20 ft. Figure 10.4 is a photo of a typical circular cutting machine in use.

Types of circular cutting machines include the clamshell lathe, hand-operated hinged cutters and rotary cutters, and manual cutters. The clamshell lathe can be opened easily at either side or completely split into two separate sections. The tool block and tool bit automatically feed into the workpiece with each rotation of the lathe, thus ensuring precision machining. Setup on in-line piping, elbows, tees, valves, nozzles, and flanges is simple with the split-frame design. With an available remote control device, an operator can select a given depth of cut and regulate the feed, the rotation, and the stop/start system from any distance. Pipe with outside diameters ranging from 1.25 to 42 in. and a wall thickness up to 6 in. may be cut. These machines are hydraulically or pneumatically driven. Figure 10.5 is a schematic of a clamshell lathe.

Hand-operated hinged cutters and rotary cutters can be used in close quarters. Four cutter wheels are equally spaced inside a frame that is positioned around the pipe. Pressure is applied to the cutters and is rotated about the pipe. The handle swing is 90–110° for the hinged cutters and 45–60° for rotary cutters. A clearance of 4 in. is required for the hinged cutter for most piping. The rotary cutter requires a 4-in. clearance for piping up to 16 in. in diameter and an 8-in. clearance for pipe diameters larger than 16 in. Both cutters are capable of cutting steel, most stainless steels, and ductile and cast iron with the appropriate wheels. Manual cutters can be used almost anywhere clearances are met—in a ditch, underwater, in an explosive environment, overhead, and in racks of pipe. Figure 10.6 is a photo of a rotary cutter.

**Applications**

Historically, circular cutting saws have been used primarily for pipe weld preparation, but they are an effective decommissioning tool for segmenting pipe and round vessels. Contamination control is maintained by vacuuming the chips from the cut, if required, and by collecting, filtrating, and recycling cutting lubricants, if they are used. Because the cutting is by mechanical methods, there is little danger associated with fire hazards. Portable cutting machines require approximately 12 in. of radial clearance and 21 in. of lateral clearance. Their weight is

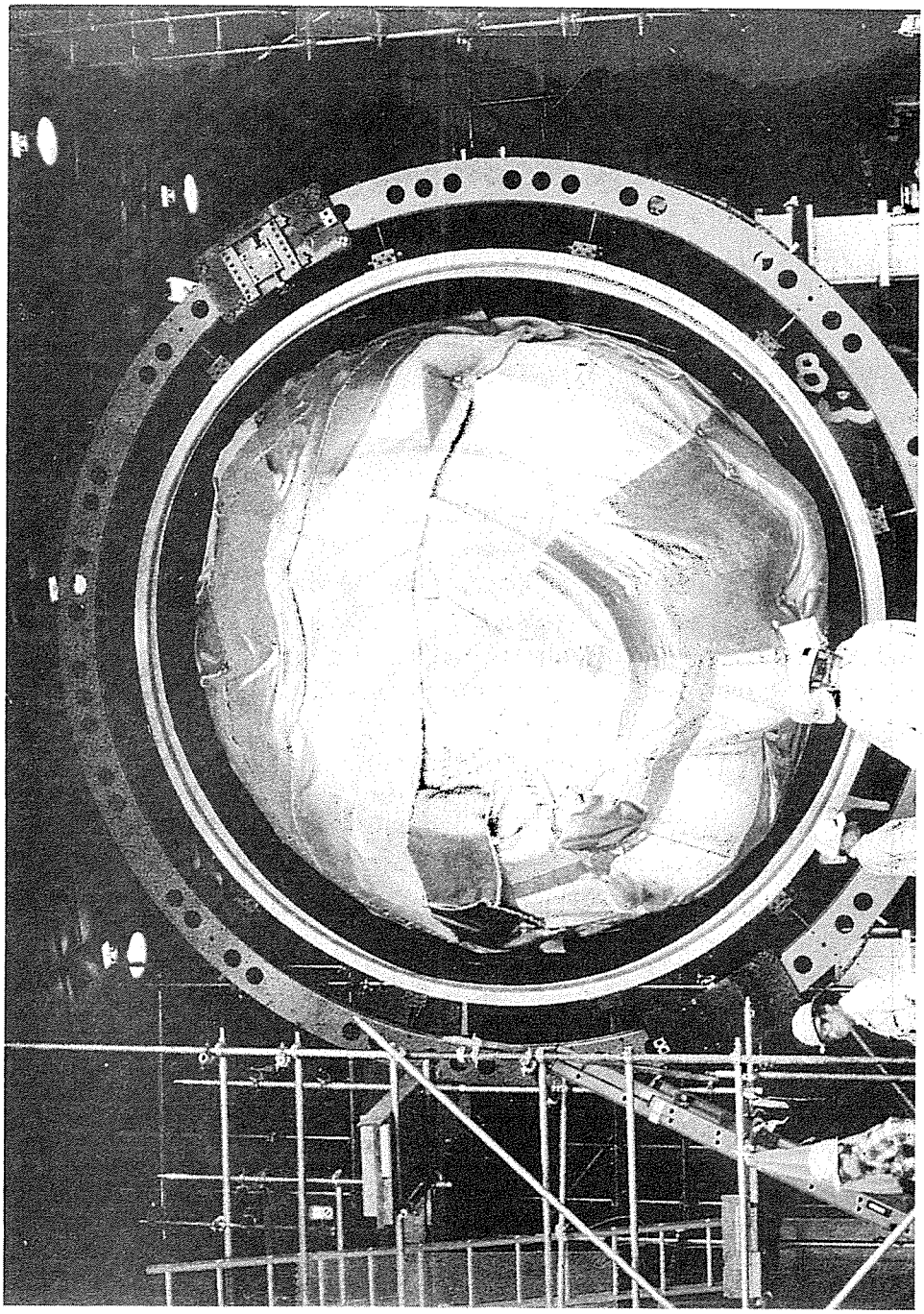

**Figure 10.4. Circular cutting machine**

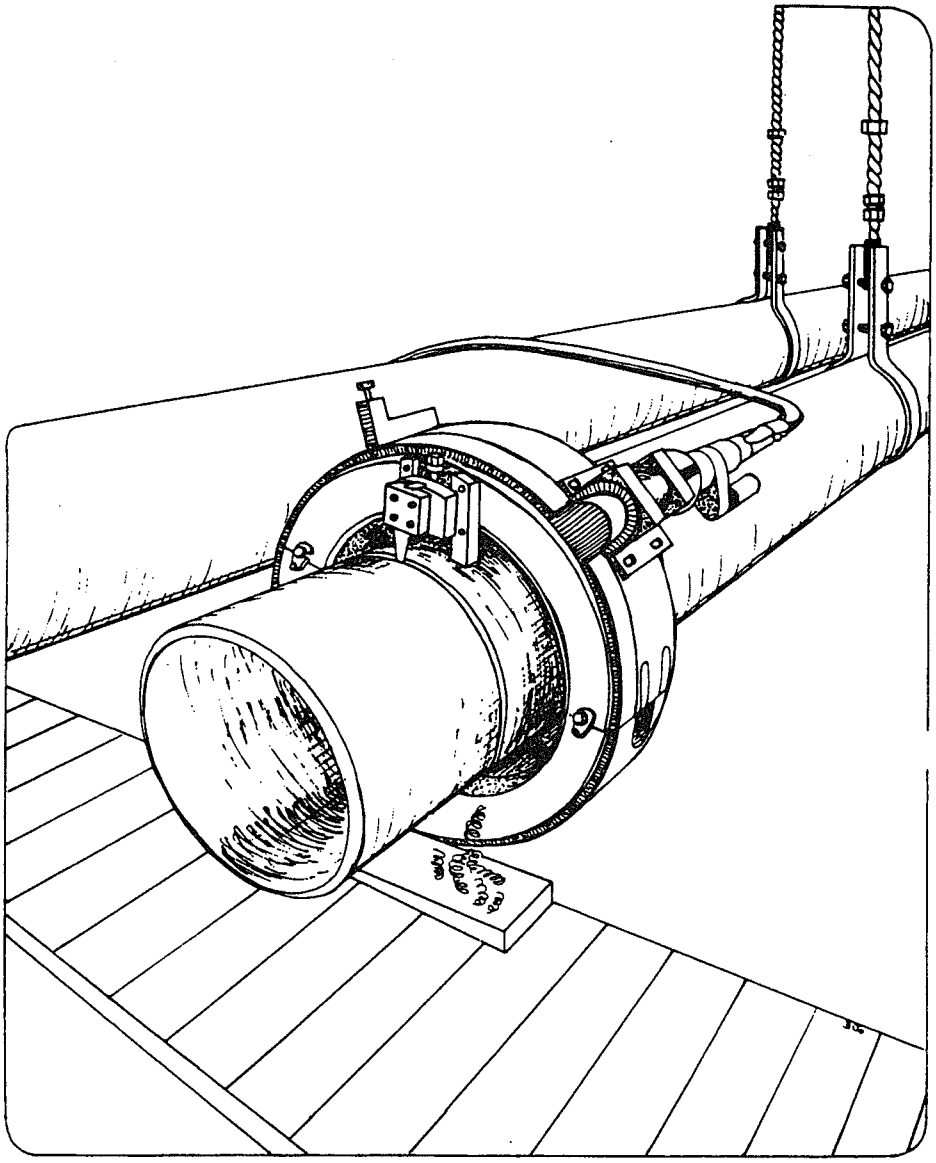

**Figure 10.5. Schematic of a clamshell lathe**

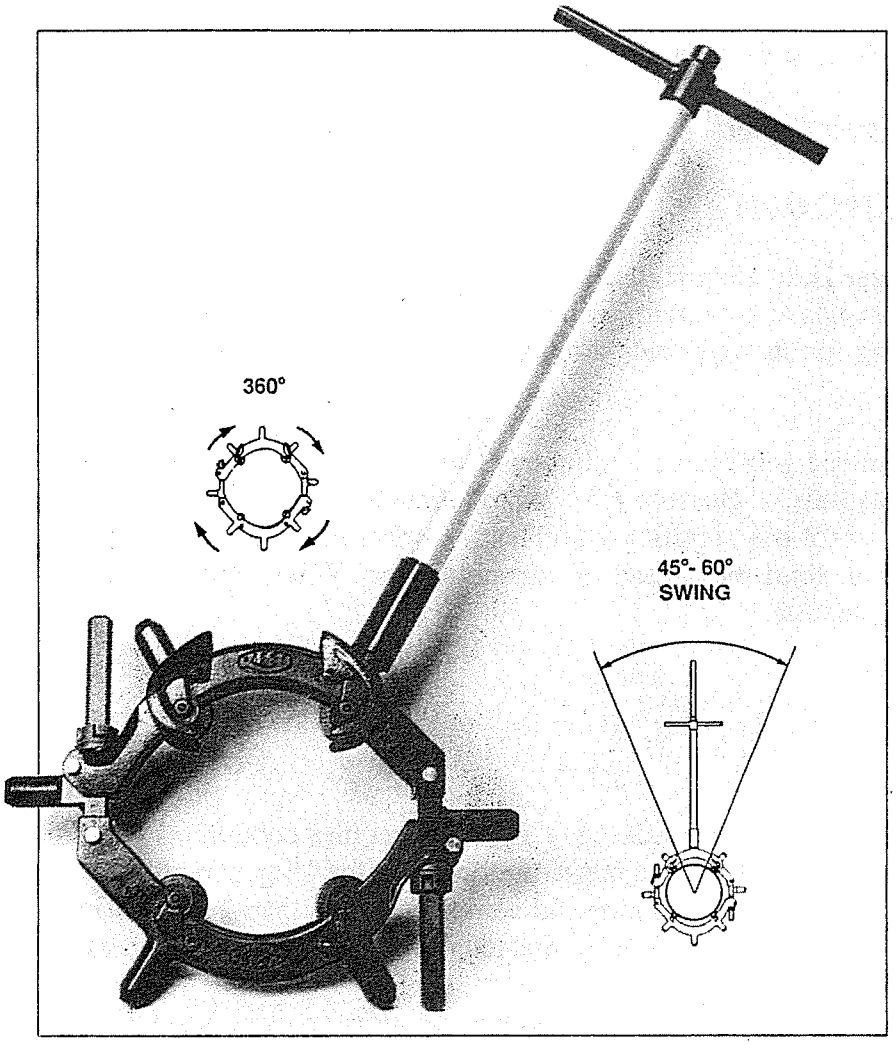


**Figure 10.6. Photo of rotary cutter**

approximately 200 lb. After being positioned by one or two operators, they can be operated remotely to reduce exposure to personnel.

Because the maximum cutting depth in carbon steel is limited to 3/4 in. per pass, multiple passes are necessary for greater pipe-wall thicknesses. This is a unique advantage, however, in that circular cutting saws can reduce a pipe-wall thickness to a minimum without completely cutting it. Once the pipe wall is reduced to a minimum, the pipe can be broken with a cold chisel and hammer, minimizing the intrusion of foreign matter into the pipe and reducing the spread of contamination. This advantage also holds true for the clamshell lathe.

### 10.3.1.4 Abrasive Cutters

**Description of Technique**

An abrasive cutter is an electrically, hydraulically, or pneumatically powered wheel formed of resin-bonded particles of aluminum oxide or silicon carbide. The wheels, usually reinforced with fiberglass matting for strength, cuts through the workpiece by grinding the metal away, leaving a clear kerf.

The cutting technique generates a continuous stream of sparks, making it unsuitable for use near combustible materials. Because the swarf particles are removed in very small pieces, contamination control is a significant problem. Cutters may be fitted with a swarf containment system that acts to limit the spread of contamination. Water lubricants also tend to limit the spread of contamination.

**Applications**

**Portable**

Hand-held abrasive cutters are relatively slow and require continuous operator attention. The reaction force of the workpiece against the operator for long periods is tiring and limits the applicability of manual cutting to pipe and components less than 2 in. in diameter. With the use of a track system, pipes up to 60 in. in diameter with a 4-in. wall thickness can be cut.

Contamination control is a significant problem. In most applications, the operator should work within a contamination control envelope and wear PPE including respiratory protection.

**Stationary**

Abrasive cutters can be used in a stationary, centralized workstation. In this environment, faster and more powerful machines can segment long sections of pipe into lengths suitable for packaging and shipping. A 30-hp unit is capable of cutting 6 in. of solid stock in 2 min. Because this is a more controlled environment, the spread of contamination can be reduced by fitting the machine with a swarf containment hood and by using water as a lubricant.

As compared with the stationary hacksaw, abrasive cutters have similar cutting speeds and are less expensive. A disadvantage to one abrasive cutter is that it can only cut through materials with a maximum thickness of 8 in. when contamination control envelopes are used.

### 10.3.1.5 Wall and Floor Sawing

**Description of Technique**

Wall and floor sawing generally is used when disturbance of the surrounding material must be kept to a minimum. A diamond or carbide wheel is used to abrasively cut a kerf through the concrete. The blades can be used to cut through reinforcing rods, although the rods tend to wear the blade diamonds off. The blade is rotated by an air or hydraulic motor. Floor saws, also called *slab saws* and *flat saws*, feature a blade that is mounted on a walk-behind machine requiring only one operator. Wall saws, also called *track saws*, employ a blade on a track-mounted machine. The track is mounted on a wall or incline that will not permit the use of a floor saw. The operator manually advances the blade into the work. The dust produced by the abrasive cutting is controlled using a water spray. The abrasive blade produces no vibration, shock, smoke, or slag and is relatively quiet. Figure 10.7 shows a photo of a typical wall saw, and Figure 10.8 a typical floor saw.

**Applications**

Thicknesses up to 3 ft have been cut with concrete saws. The maximum thickness of cut is approximately equal to one third of the blade diameter. Table 10.3 lists typical cutting speeds for a conventional concrete saw. The saw cuts approximately 150 in.$^2$/min of cut surface, regardless of thickness. Cutting can be done either manually or remotely.

**Table 10.3. Cutting Speed for Concrete Saw**

| Concrete Thickness (in.) | Cutting Speed (in./min) |
|---|---|
| 5 | 30 |
| 10 | 15 |
| 24 | 6 |
| 36 | 4 |

A portable power saw incorporates a unique off-center drive that can achieve a 260-mm-deep cut (~10-in.) with its 350-mm-diameter (~14-in.) saw blade. The unit is lightweight and can be held

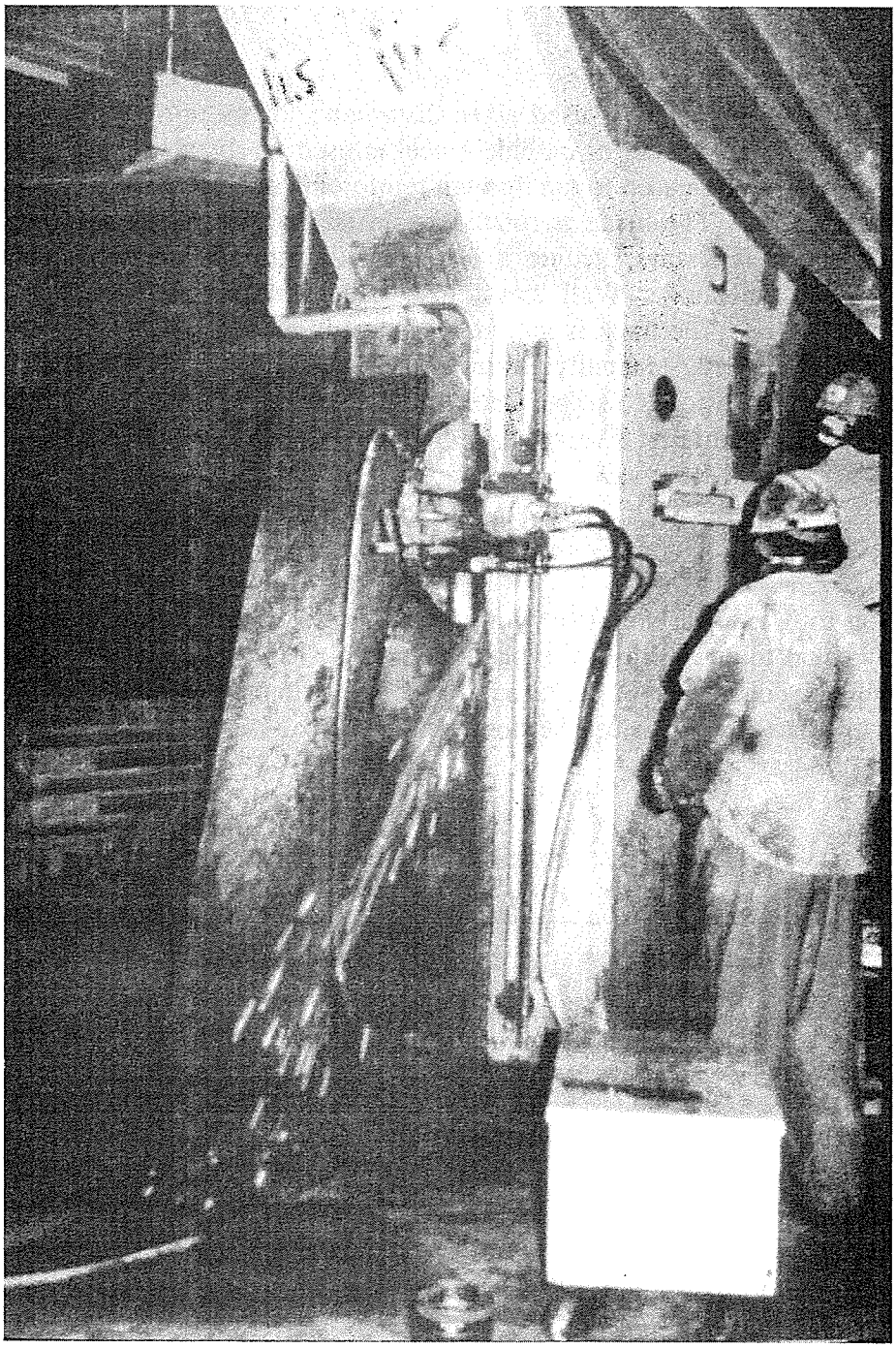

**Figure 10.7. Typical wall saw**

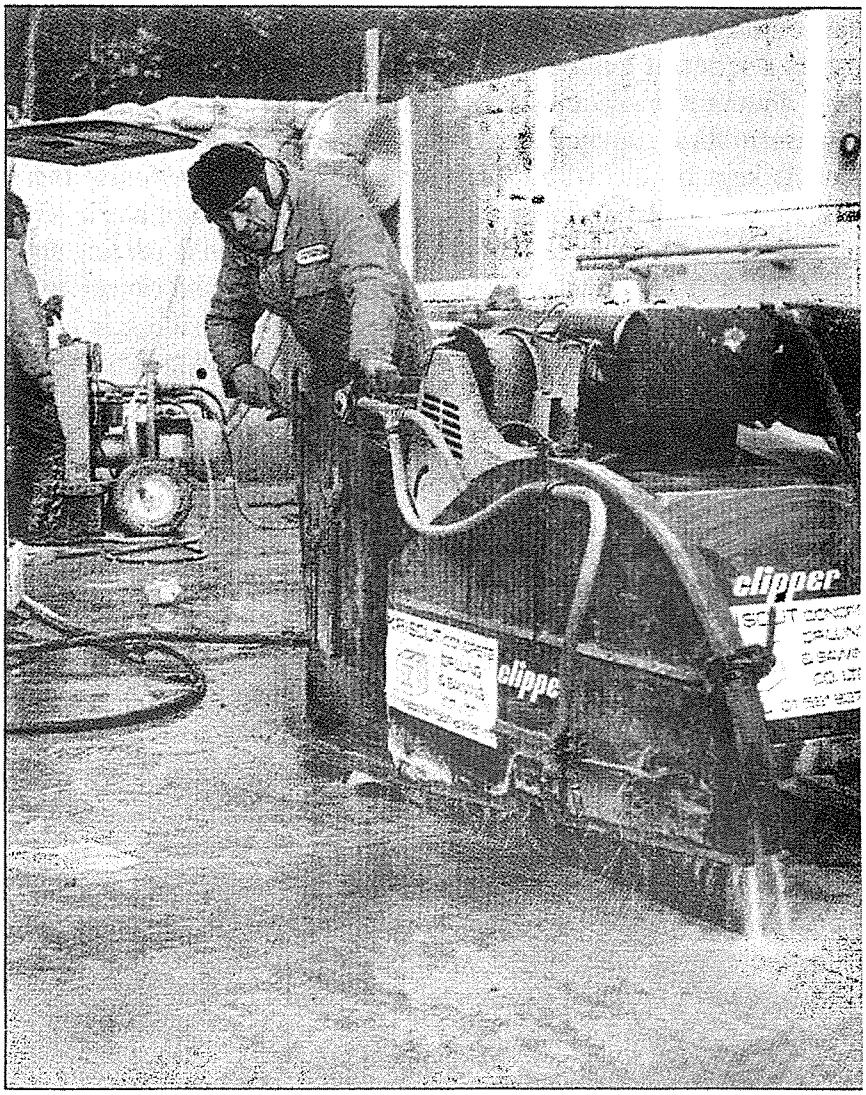


**Figure 10.8. Typical floor saw**

by a single operator. It is capable of cutting reinforced and nonreinforced concrete that would normally require a 700-mm-diameter (27 1/2-in.) blade with conventional (center-driven) saw. Over a long period of continuous cutting, debris tends to bind the drive mechanism of the unit; however, for short periods of time this machine performs well. Figure 10.9 shows an off-center drive unit and a schematic comparing it with a conventional saw.

### 10.3.1.6 Diamond Wire Cutting

**Description of Technique**

Diamond wire cutting, which has been adapted from techniques used in the stone quarries of Europe, involves a series of guide pulleys that draw a continuous loop of multistrand wire strung with a series of diamond beads and spacers through a cut. The length of wire required for a cut is obtained by assembling standard-length sections of wire end to end using screwed sleeves. A contact tension is kept on the wire. This force, in combination with the spinning wire, cuts a path through concrete and reinforcing rods. A typical drive unit has a ~31-in. drive pulley with a ~47-in. travel. Linear wire speed is adjustable for 0–5,900 ft/min, and wire tension can be adjusted from 0 to 330 lb. The wire is wrapped around the object to be cut and tension is applied. If an internal cut is required (e.g., doorway), core drilling is necessary, and the wire is fed through the holes. Almost any thickness can be cut with this technique. Figure 10.10 is a photograph of a diamond wire saw in operation.

One of the major benefits of the wire saw is the flexibility of its pulley system, which allows it to cut unusual configurations. This flexibility also allows easy and safe cutting in difficult access areas without moving obstructions. The wire saw also lends itself to remote cutting in hazardous, radioactive, or underwater environments. Moreover, little noise and vibration are created, so the structural integrity of the surrounding structure is not affected. Water is used not only for cooling and lubricating purposes, but also for removing swarf from the kerf. This water can be treated and recycled, and the swarf, if contaminated, must be properly disposed of.

Potential concerns associated with wire saws include physical hazards caused by mechanical failure or contaminant transport. For example, a wire that breaks while it is being used can inflict injury upon the operator. It is just as important, however, that the same vigilance with which the project manager ensures that the saw and drive unit are carefully maintained be extended to potential problems associated with contaminant transport. Contaminated swarf can be carried from the cutting area by the wire, contaminating the wire saw itself, the areas along the path of the wire, and the area where the drive unit is located.

**Applications**

Although a diamond wire system can cut any material, in decommissioning projects it is usually used to cut thick, reinforced concrete slabs or walls, such as the biological shield in a nuclear facility. For example, a diamond wire cutting system was used during the decommissioning of the PPA to efficiently utilize the volume of the shipping containers. Although the floor of the

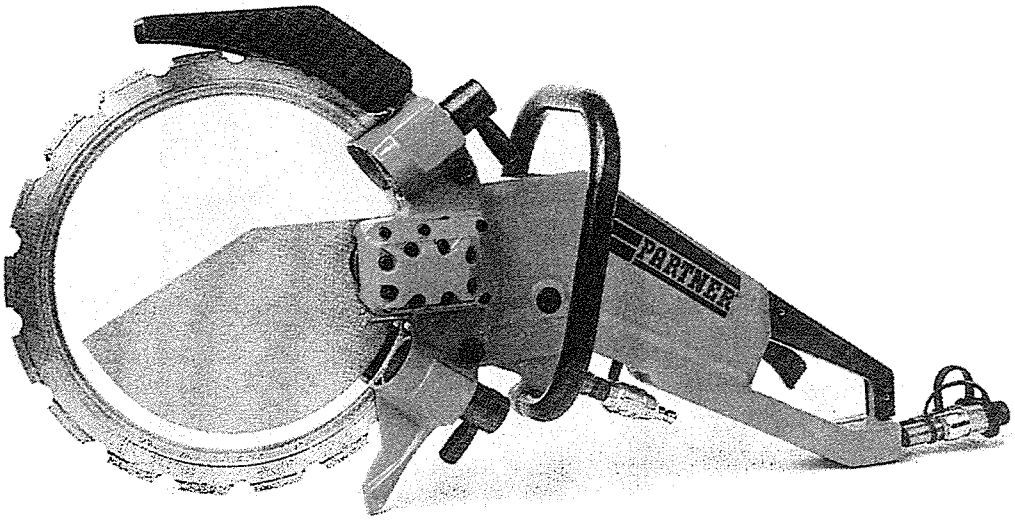


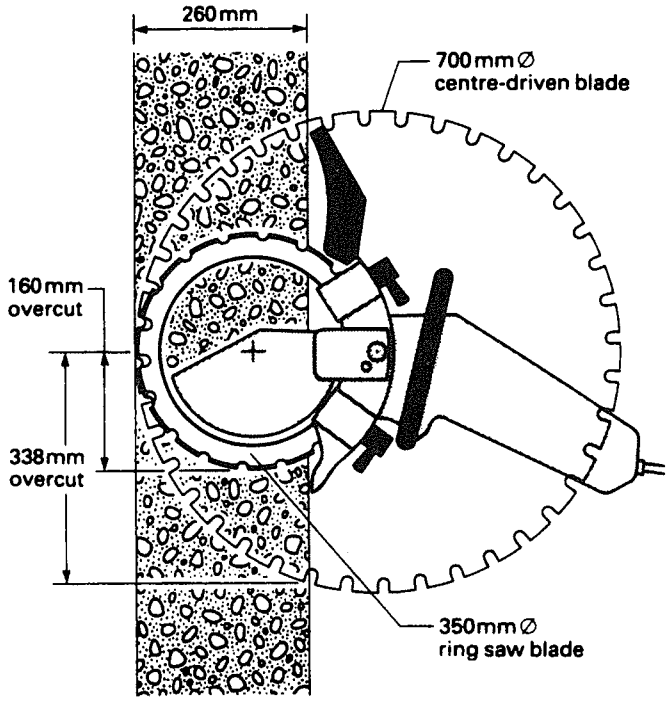


**Figure 10.9. Off-center drive unit and a schematic comparing it with a conventional saw**

accelerator reached a depth of 33 in., it was successfully and precisely cut. In the conversion of Zimmer Nuclear Power Plant to a coal-burning plant, a diamond wire cutting system was used to cut openings in thick, reinforced concrete walls that had many obstructions and embedded pipes and conduits. More than 60 blocks of concrete were cut and removed, some as large as 22-ft-long by 5-ft-wide and 6-ft-thick and weighing 40 tons. The job took 3 months, and as many as five wire saws were used simultaneously.

Diamond wire saws have been used to cut heat exchanger tube bundles at many nuclear facilities, including a component cooling heat exchanger bundle at Sequoyah Nuclear Station in 1989, a preheater bundle at Millstone Nuclear Station in 1990, and a condenser tube bundle at the Indian Point Nuclear Unit 2 in 1991.

An example of how these saws might be used in this application is provided by activities at the Studsvik Nuclear Station in 1989, where a preheater with a bundle diameter of 2.5 m was cut using a wire saw. The first step was to cut the shell with a heavy travel cutter to expose the tube bundle. Once the shell was cut, a portable wire saw was bolted to a support plate; and idler wheels were positioned about the bundle, which contained approximately 4,000 2-cm-diameter, 304L stainless steel tubes and a 12-cm carbon steel center pipe. The approximate cutting time was 17 hrs, with a linear wire speed of less than 25 m/s.

### 10.3.1.7 Explosive Cutting

**Description of Technique**

Explosive cutting is a method of segmenting materials using an explosive that is formed in a geometric shape specially designed and sized to produce the desired separation of the workpiece. It is based upon a phenomenon known as the *Munroe Effect* and uses directed shock waves, together with the products of explosive decomposition and the metal fragments from the explosive's sheathing material, to form the primary jet-like cutting action. The cutter is shaped like a chevron, and the apex is pointed away from the material to be cut. When detonated, the explosive core generates a shock wave that fractures the casing inside the chevron and propels the casing into the material to be cut. Figure 10.11 shows a typical cutter composition and a detonation sequence during a cut.

This is a potentially dangerous process, and the application should be left to experts who specialize in that field. Pieces of explosive, slightly longer than the target, are taped or wired to the target, with standoff blocks under the explosive. (Standoff is the recommended distance between the target and the explosive that allows the cutting jet to form properly before it reaches the target.) Low density polystyrene (~1 lb/ft$^3$) makes a good standoff block. The extra length of explosive should be at the initiating end to allow the explosive column to reach full cutting performance before it hits the target area. No foreign debris or water should be present in the standoff area or in the apex of the explosive.

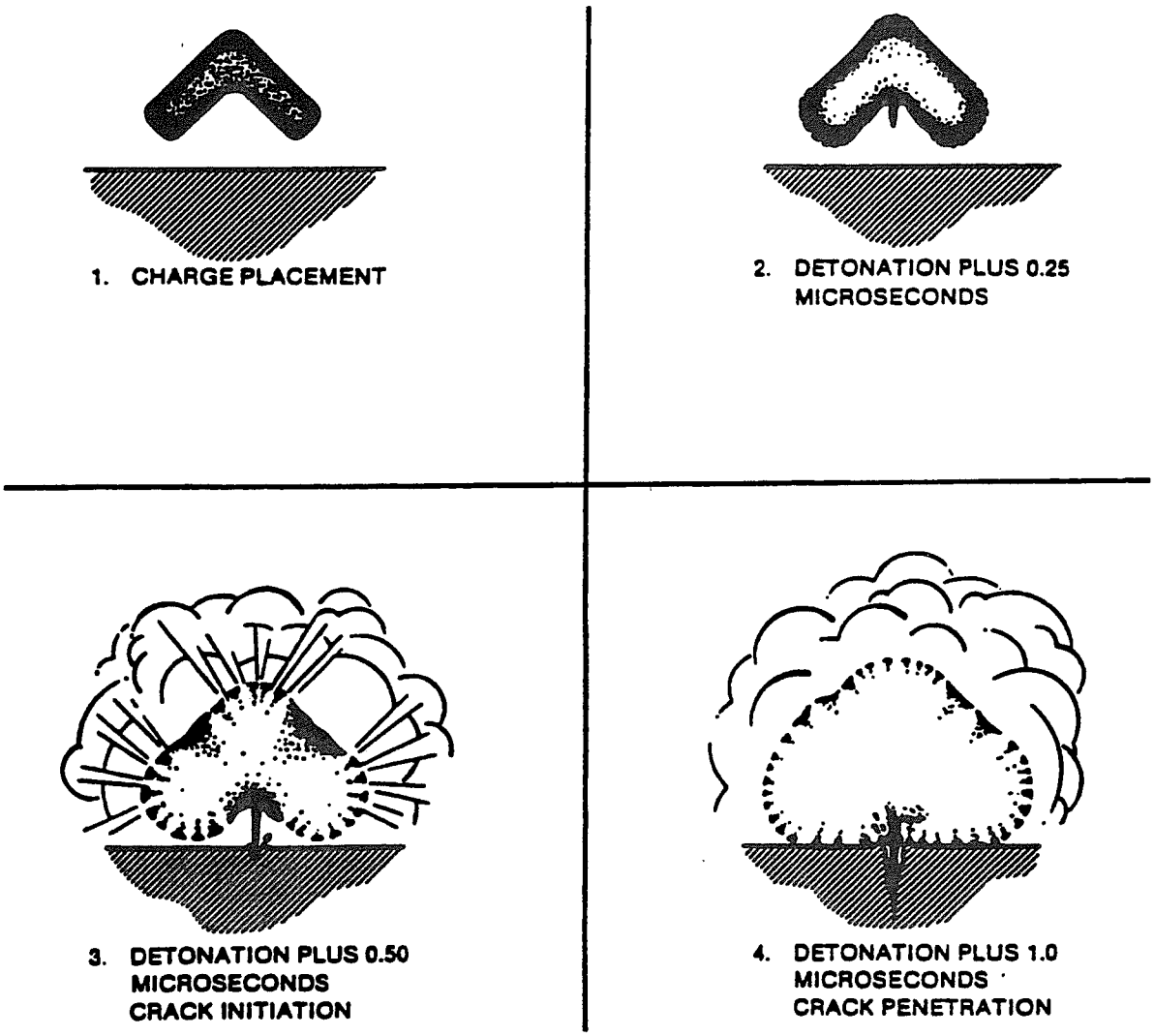


**Figure 10.11. Typical cutter composition and detonation sequence during a cut**

Explosives are initiated by nonelectric or electric blasting caps. The caps are attached to the end of the explosive with tape or a holder. The exposed end of the explosive must be clean and free of debris. The caps are centered on the explosive column, and detonating cord pigtails or electric leads are run from the caps to the initiation source. Delays can be built in by using two or more initiators attached to separate trunk lines or by using delay caps at the appropriate explosive interfaces.

The detonation front progresses along the length of the explosive at approximately 25,400 ft/s; consequently, severance of the target is essentially instantaneous. The specific application must be evaluated in actual use for material type and condition, as well as the type of loading on the structure to be severed (compression, tension, etc.).

The target material is cut, not fractured or snapped. In concrete, there would be some local fracturing and pulverizing of the surrounding area. In reinforced concrete, some of the deeper reinforcing rods may not be cut. In this instance, either a reinforcing rod cutter or an oxyacetylene torch can be used.

## Application

Explosive cutting can, in theory, segment metals with thicknesses of 6 in. or greater and normally is used when the geometry of the object being cut is too complex to employ other methods, or when several cuts must be made simultaneously (e.g., removal of a large prestressed beam where it is impractical to shore up the ends for temporary support). Consequently, cutters have been used on concrete for removing buildings, salvaging bridges, and felling smokestacks. Of course, the practical consideration of adequate protection against the explosive shockwave will determine feasibility for use.

Explosive cutting is expected to be of limited use in a decommissioning program, however, and then only where other techniques are simply not feasible or practical. At JPDR, for example, shaped explosives were used in an attempt to cut pipes with outside diameters of 2 1/2 in. and 3 1/2 in. in air, and pipes with outside diameters of 4 in. underwater. In this instance, only the in-air technique was successful. The failure of the underwater technique is attributed to the large standoff distance between the shaped explosive and the inner pipe surface (i.e., the energy of the explosive decreased as the standoff distance increased.)

Nonetheless, even if such a technical problem were corrected so that explosive cutting could be implemented on a decommissioning site, the project manager should still be aware of other concerns associated with the process. For example, care should be taken to ensure that there is adequate worker protection against explosive debris, that the blast does not affect the mechanical integrity of the surrounding structures, and that any potential contamination or contaminated material is effectively and properly controlled.

Explosive cutting of contaminated components and systems may be used for the following unique applications:

- where simultaneous cuts must be made,
- where cutting techniques do not have sufficient access, and
- where remotely operated tools are used to position the explosive cutters in high-level radiation zones.

The ease with which charges can be placed is an important feature of explosive cutting. Charges are designed with spring clamps or other mechanical fasteners for ease of fastening, either manually or with remotely operated tools.

### 10.3.1.8 Core Drilling and Stitch Drilling

**Description of Technique**

The core drilling technique makes use of a diamond- or carbide-tipped drill bit in an electric- or fluid-driven rotary drill. Precise, circular cuts of almost any diameter up to 60 in. can be drilled. The stitch drilling process, an extension of the core drilling process, involves the boring of a series of overlapping holes. Stitch drilling can also be performed by boring close-pitched holes with the centerlines of the holes located along the desired breaking plane in the concrete. The hole pitch is such that very little concrete is left between adjoining holes (less than half the radius of the holes). When a line of holes has been drilled along the breaking plane, bars are inserted into the holes, and force is applied to the free end of the bars in a line perpendicular to the breaking plane to shear the remaining concrete. Figure 10.12 shows core stitch drilling in progress.

**Applications**

Core drilling produces no gases or smoke, thereby facilitating contamination control. The dust produced by the drilling is controlled by a water spray that is also used to cool the drill bit. Stitch drilling is used where surrounding material must not be disturbed or where accessibility is limited. However, the slab to be removed must be amenable to the method used to shear the concrete (bar, slab, or wrecking ball) if overlapping holes are not drilled. The method of drilling close-pitched holes is not recommended for reinforced concrete because the remaining reinforcing rod inhibits shearing.

Concrete drills can cut a 4-in.-diameter hole through 4 ft of concrete in 60 min. When drilling close-pitched holes, the pitch between holes is recommended to be no greater than 1/2 in. for 4-in.-diameter drills. Accordingly, this process is very slow and costly for large volumes of massive concrete removal; however, it is an effective method for removing almost any thickness of concrete in certain restricted situations where a diamond wire saw cannot be used.

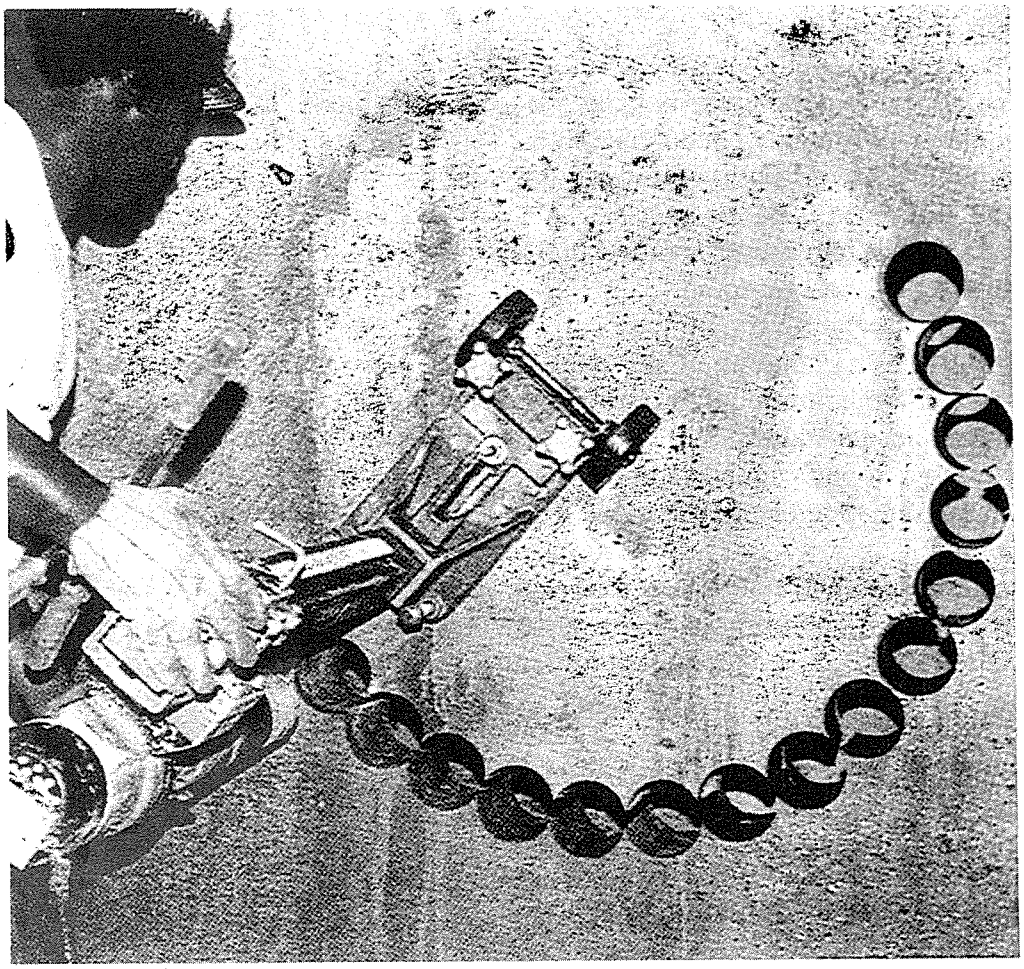

**Figure 10.12. Core stitch drilling in progress**

### 10.3.2 Thermal Cutting Techniques

There are two types of thermal cutters: flame producers and arc producers. The more common are the flame producing techniques where a flame is established by igniting fuel gases. With arc producing techniques, an electrical arc is established between the tool and the workpiece. In either method the workpiece is literally melted away. Both types of cutters are discussed in the following sections.

#### 10.3.2.1 Plasma Arc Cutting

**Description of Technique**

The plasma arc cutting technique is based on the establishment of a direct current arc between a tungsten electrode and any conducting metal. The arc is established in a gas, or gas mixture, that flows through a constricting orifice in the torch nozzle to the workpiece. The constricting effect of the orifice on both the gas and the arc results in very high current densities and high temperatures in the stream (10,000–24,000 K) (AWS). Figure 10.13 illustrates the basic components of a plasma arc torch.

The stream or plasma consists of positively charged ions and free electrons. The plasma is ejected from the torch nozzle at a very high velocity and, in combination with the arc, melts the contacted workpiece metal and literally blows the molten metal away. A typical cut starts at the metal edge, and a through cut is made in a single pass by simply moving the torch at a fixed rate of speed in the direction of the cut and at a fixed nozzle spacing relative to the workpiece.

The plasma arc technique can also be used with a water-injection option. This technique directs a radial jet of water that impinges on the plasma stream near the torch nozzle. The effect of the water jet is to further constrict the plasma stream, which results in even higher current densities. The cutting effect is a narrower kerf, higher quality cut surface, and reduced smoke generation. A typical plasma arc system requires a direct-current power supply of up to 1,000 A. An automatic plasma arc cutting system would include torch positioning equipment; torch travel system; air, starting gas, and plasma gas supply systems; pilot arc high-frequency power supply; plasma arc power supply; and associated gas flow, arc, and mechanical travel controls.

Figure 10.14 is a schematic of a plasma arc cutting system, and Figure 10.15 is a schematic representation of a torch assembly unit in position for segmenting a reactor vessel.

Portable, hand-held automatic plasma cutting systems are available from various manufacturers as off-the-shelf items. These units use compressed air as the plasma gas and can be mounted on a track system for accurate cuts.

**Figure 10.13. Typical portable plasma arc torch**

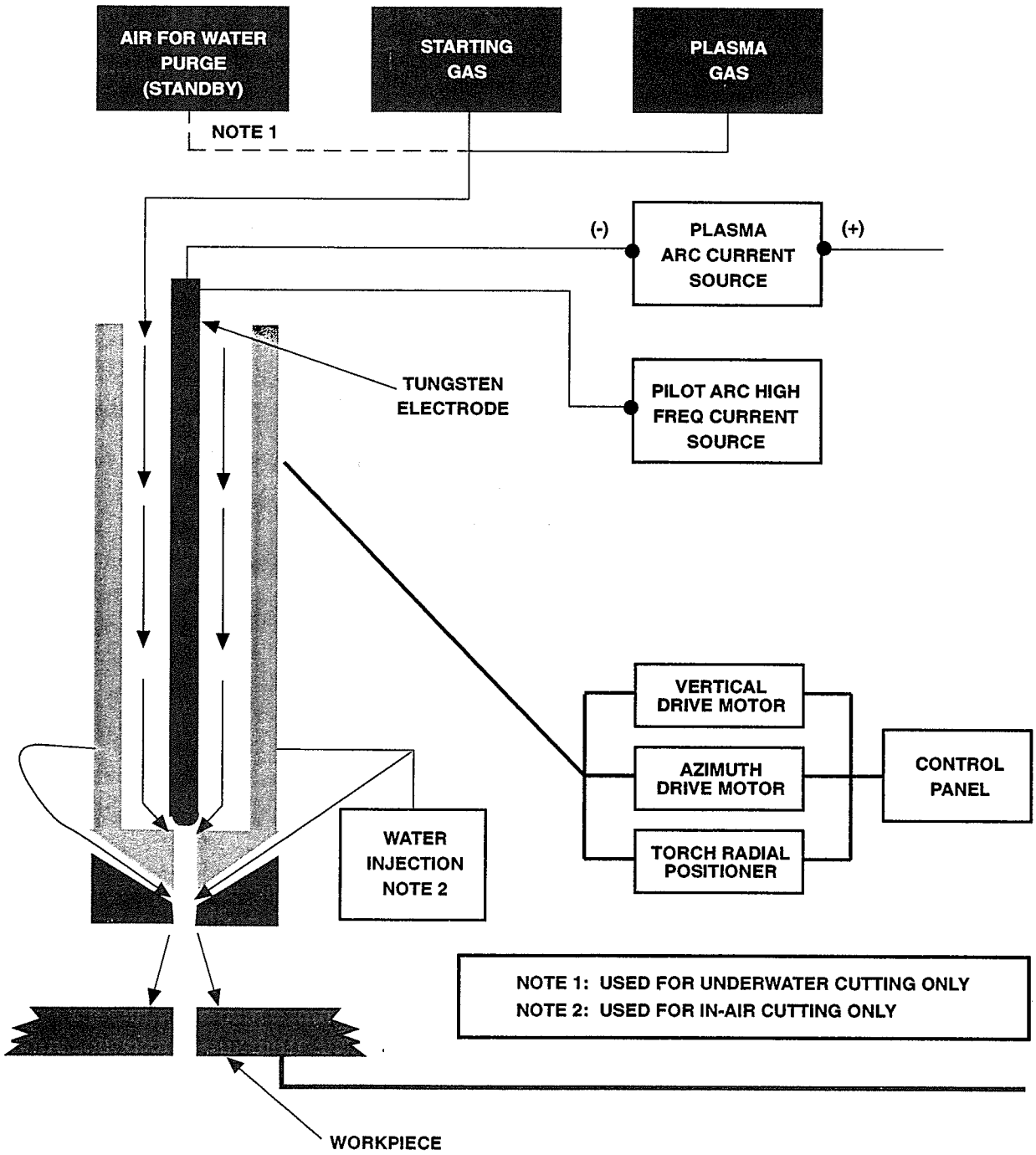


**Figure 10.14. Remote plasma arc cutting system schematic**

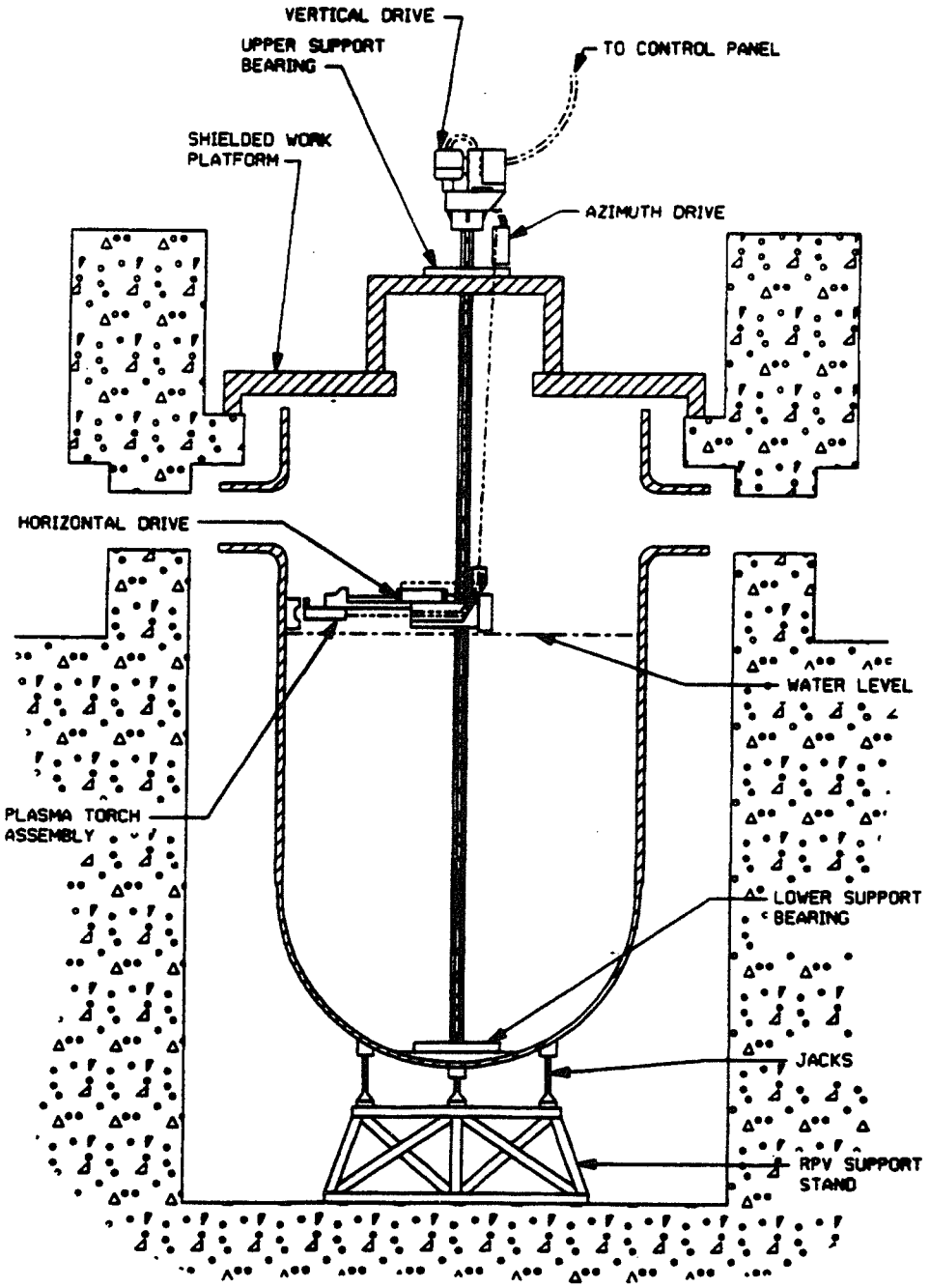


**Figure 10.15. Plasma torch system for reactor vessel schematic**

## Applications

### Thick Metallic Components and Structures

The plasma arc technique is capable of cutting all metals. As indicated by performance results at JPDR, thicker sections of material can be cut in air than underwater. In this instance, 8 1/4-in.-thick stainless steel reactor internals were able to be cut in air, while only 5 in. thicknesses were able to be cut underwater. Moreover, the design bases for plasma arc systems indicate that thicker sections of carbon steel than stainless steel can be cut.

The plasma arc can also be used to pierce metals (i.e., in this process a cut does not have to be initiated from the edge of the segment to be cut). Experience at Elk River indicates that metals could be pierced with a nozzle standoff distance of 0.625 in. This gap, which is about twice the standoff distance used during cutting, also resulted in minimizing the blowback of the molten metal and extending the operating life of the torch.

One potential drawback to plasma arc systems is that a phenomenon called *double arcing* sometimes occurs. This means that two arcs are established: (1) between the electrode and the nozzle and (2) between the nozzle and the workpiece. This phenomenon may be caused by an eccentric electrode that shorts the arc from the nozzle to the workpiece or by the blowback of removed metal particles, which results in a short circuit. Nozzle damage is likely to result.

Operations of a plasma arc system often include the use of a contamination control envelope for contaminated components. The operating life of a typical torch assembly is 30 min for the nozzle and retaining unit and 3 hr for the electrode.

### Piping and Components

Piping and components may be cut using a plasma arc system that has been modified in some way. The following is a list of modifications that might be useful on a decommissioning project.

- Track systems are available for use with small plasma torches. In most cases, commercially available off-the-shelf tracks will meet the required geometric constraints; in some cases, however, specially fabricated designs may be required. These tracks may be fastened to the workpiece by various methods, including magnetic and strap fasteners. The torch is advanced and guided on the tracks by a motor that is remotely operated. Remote operations reduce operator exposure.

- Hand-held plasma torches can be used to segment contaminated components so long as strict contamination control can be achieved. Respirators for torch operators are required, as are high-volume ventilation systems that draw the contaminated fumes through HEPA filters. Another method of control is a fabricated, nonflammable contamination control envelope,

similar to a glove box, in which the cutting is performed. The design of the envelope must allow fresh air to circulate freely to help filter contaminated fumes.

- Hand-held plasma torches cannot be used for materials that are more than 1 1/2-in.-thick because of their reaction to the gas flow and plasma jet. Portable units are rated by amperage: as the amperage rating increases so does the cut capacity. For example, a 1-in.-thick stainless steel flat plate can be cut with a 100-A unit at approximately 12 in./min. A rule of thumb for machine operation is that a 50-A unit can cut material that is approximately 5/8-in.-thick. This operating efficiency is decreased by 10–15% when hand-held units are used because reaction forces hinder effective control of the torch.

During the decommissioning of Shippingport, the reactor coolant piping system and equipment were removed by the plasma arc process. A HEPA filtered exhaust system was connected to a reinforced plastic containment around the cutting area. The interior of the piping was also connected to a HEPA filter that effectively captured the smoke and off-gases to the extent that airborne contamination levels did not approach the level requiring personnel protection. Containment tents were no longer used, but monitoring of the air continued. This process was used on large diameter pipe, heavy wall components, and some stainless steel beams. It took an average of 30 min to cut an 8-in.-outer diameter (OD) pipe with a 1 1/2-in. wall. This process reduced labor requirements as well as occupational exposures.

### 10.3.2.2 Oxygen Burning

**Description of Technique**

Oxygen burning, sometimes referred to as *oxyacetylene cutting*, consists of a flowing mixture of a fuel gas and oxygen ignited at the orifice of a torch. The fuel gas may be acetylene, propane, or hydrogen. In general, a hand-held torch is used in this process, although the process is readily adaptable to automated positioning and travel. The cutting tip of the torch consists of a main oxygen jet orifice surrounded by a ring of preheater jets. The fuel gas is exothermically oxidized through the preheater jets. When the metal to be cut reaches approximately 1,500°F, the main oxygen jet is turned on and the heated metal "burned" away, leaving a reasonably clean cut surface. Figure 10.16 depicts a hand-operated automatic gas cutting tool and Figure 10.17 a circumferential flame cutting machine.

Oxygen burning refers to the rapid exothermic oxidation of the metal to be cut. Accordingly, the metals to undergo this process are those that can be cut with an oxygen-burning torch. In general, these metals include the ferrous metals; steel products such as sheet, plate, bar, piping, forgings, and castings; and wrought iron products.

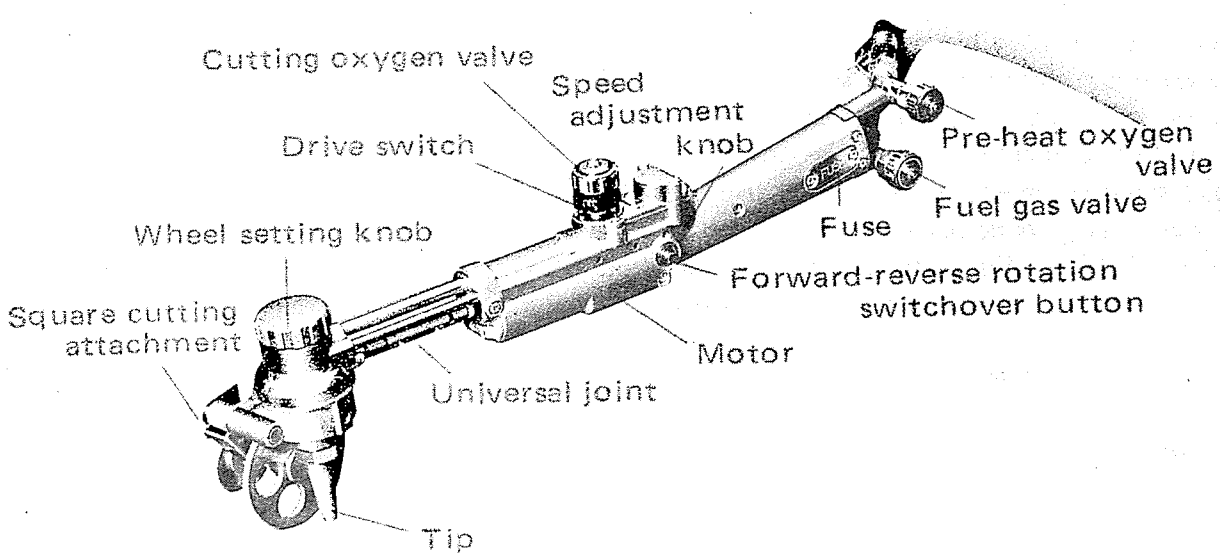


**Figure 10.16. Hand-operated automatic gas cutting tool**

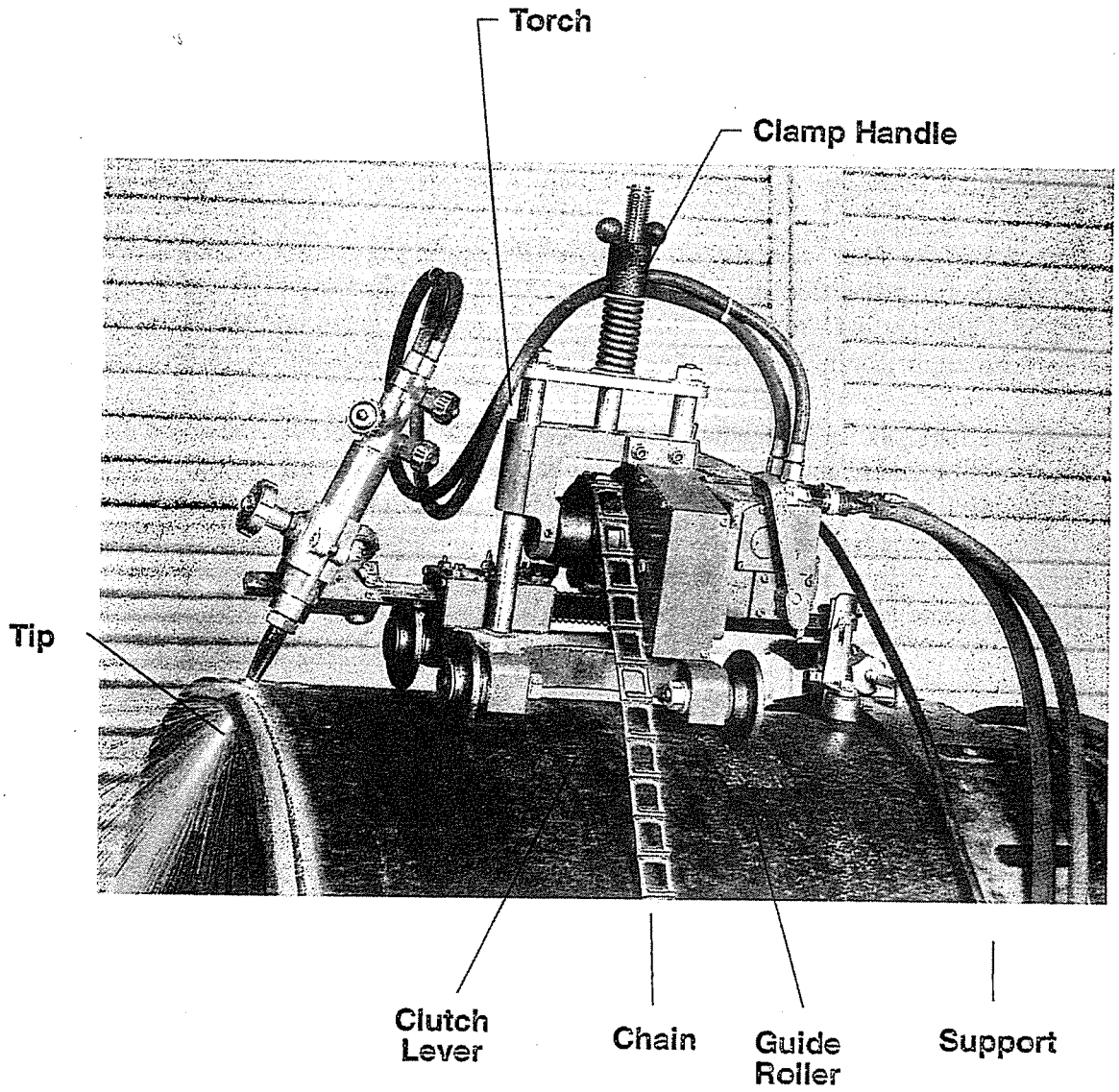


**Figure 10.17. Circumferential flame cutting unit**

An oxygen-burning torch is ordinarily unable to cut aluminum and other nonferrous or ferrous/high-percent alloy metals, such as stainless steel, because refractory oxides (e.g., $CrO_2$, $Al_2O_3$) with high melting-point temperatures are formed during the process. However, these metals can be cut if either the temperature of the torch flame can be increased above the melting point of the oxides or the formation of the oxides can be prevented. For example, an iron powder or an iron/aluminum powder flowing mixture can be introduced at the torch nozzle to significantly increase the torch flame temperature. In this instance, the iron/aluminum powder, which is introduced either through the oxygen jet or by a separate nozzle feeding into the cutting zone, increases the temperature of the flame, melting the refractory oxides formed by the oxygen. In addition to the higher temperatures, the cutting action is assisted by the increased mass flux in the torch flame, producing an erosion-like effect on the metal that facilitates the cutting action. A powder can likewise be used to inhibit the formation of the oxides. In this instance, a chemical flux, generally a mixture of both iron and flux powders, can be introduced to the reaction.

Alloying elements in the steel generally do not affect the cutting operation. Precautions that are normally necessary for protection of the workpiece, such as preheating high carbon steels, are not necessary in a dismantling program. Cracks that may be introduced into the metal in the area of the cut have no significance because the metal will either be disposed of or scrapped.

The selection of a fuel gas for a standard oxygen-burning torch is usually based on the cost of fuel gas, consumption rates, and impact of the preheating rate on cutting speed. Although the actual cut is accomplished by burning the metal with the oxygen jet, a more rapid preheat results in a faster cutting speed, a factor that obviously is more important when work is to be conducted on thick workpieces versus thin workpieces. In this regard, it should be noted that acetylene ($C_2H_2$) produces a flame temperature significantly higher than the flame temperatures of the other fuel gases.

## Applications

### Thick Metallic Components or Structures

The oxygen-burning technique is quite effective in cutting carbon steels. Oxyacetylene cutting has been used in production runs for cuts of material up to 60-in.-thick. The cutting speed and oxygen consumption for in-air segmenting of carbon steel can be found in Table 13.3.6 of Marks' Handbook (Avallone and Baumeister 1978).

Oxygen burning can be accomplished either in air or underwater, although underwater cutting is somewhat more difficult to accomplish because there is greater heat loss in an aqueous environment. For this reason, the maximum thickness that can be cut is 3.5 in.

Underwater cutting is accomplished using either an electric arc or a fuel gas to preheat the metal. When the metal is preheated electrically, a specialized electrode that is hollow, shielded, and insulated is used. A fully insulated electrode conducts the current and oxygen to the workpiece.

Once the arc is struck and the metal preheated, the oxygen is turned on and the metal burned away.

When the metal is preheated using fuel gas, the torch is surrounded with an annular bell through which compressed air and fuel gas are forced. The compressed air clears water from the workpiece, allowing the fuel gas to burn the metal away. For safety reasons, acetylene is not used underwater, except at shallow depths, because it becomes explosively unstable at pressures greater than 15 psig. In this instance, hydrogen is generally used as the fuel gas.

The principal application of oxygen burning in decommissioning work would be for the general disassembly of structural carbon steel members (e.g., beams, columns, and supports). Because the process is so widely known, skilled workers who can handle the equipment are readily available. Moreover, the equipment is inexpensive to obtain and maintain and is quickly and easily set up. In hazardous environments, the torch can be mounted on a remotely operated positioner to reduce the potential for exposures to workers.

**Piping and Components**

The oxygen-burning technique can be applied to piping and components in much the same manner as previously described for thicker components and structures, although the project manager may want to consider how pipe thickness and cutting speed affects the viability of the process. For example, only in rare instances, such as PWR hot and cold leg piping, do pipe thicknesses ever exceed 3 in. Therefore, most oxygen burning used during decommissioning projects will be applied to piping with wall thicknesses of 3 in. or less.

### 10.3.2.3 Flame Cutting

**Description of Technique**

Flame cutting, a technique used to cut concrete, involves a thermite reaction in which a powdered mixture of iron and aluminum oxidizes in a pure oxygen jet. As the high temperature of the jet (as high as 16,000°F) causes the concrete to decompose, the mass flow rate through the flame-cutting nozzle acts to clear the debris from the workpiece area. The result is a clean kerf. Any reinforcing rods in the concrete add iron to the reaction, sustaining the flame and assisting the reaction.

The nozzle is mounted on a metal frame that straddles the area to be cut. The nozzle, with any associated hoses, is moved along the metal frame at a steady rate. (The rate at which it is tracked is dependent upon the concrete depth.) Once a starter hole is cut through the concrete to prevent blowback of material and concomitant torch damage, the torch is advanced along the workface by a variable-speed electric motor controlled by an operator. The heat and smoke that result from the process can be removed with a 5–7-hp squirrel cage blower and directed through a flexible duct that houses a water fogger to hold down smoke particulates. The high operating temperatures preclude the use of HEPA filters for contamination control, making the flame

cutting technique unsuitable for use in contaminated environments unless the effluent gas is precooled.

**Applications**

Flame cutting can be used on concrete when vibration to the surrounding area is intolerable or when the thickness of the concrete to be cut exceeds the capabilities of mechanical cutters (not including diamond wire cutting). Flame cutters are capable of cutting through a maximum depth of 60 in. with or without a reinforcing rod.

The cutting speed of these cutters is 1 $ft^2$/hr, and they produce a kerf size of 4 in. through a 60-in.-thick section. The types of starting fuel used in this technique are propane and oxygen, and fuel consumption is 800 $ft^3$ of oxygen per square foot of cut, 14 lb of iron powder per square foot, and 6 lb of aluminum powder per square foot.

### 10.3.2.4 Thermite Reaction Lance

**Description of Technique**

The thermite reaction lance is an iron pipe packed with a combination of steel, aluminum, and magnesium wires through which a flow of oxygen gas is maintained. The lance cuts are achieved by a thermite reaction at the tip of the pipe in which all constituents are completely consumed. Temperatures at the tip range from 4,000 to 10,000°F depending on the environment (air or underwater) and the ambient conditions of that environment. The lance is ignited in air by a high-temperature source such as an oxygen burning torch or an electric arc. Typical lances are 10 1/2 ft in length and have outside diameters of 3/8 in., 1/2 in., 5/8 in., or 11/16 in. Use of the lance is practical only in a hand-held mode.

The system consists of a lance holder, lance, oxygen supply, 125-psi regulator, and oxygen hose no less than 3/8 in. in diameter. The lance operator must also be provided with complete fireproof protective clothing and face shield.

Because the lance is itself consumed as the cut is achieved, replacement of the lance may become necessary during a particular work activity. To do this, the oxygen is cut off when the lance is approximately 2-ft-long. A new lance is then coupled to the holder and the oxygen flow turned back on. These procedures eliminate waste while still ensuring the protection of the operator. In the same manner, two or three lances can be coupled together if the application warrants. Coupling of more than three lances is not recommended because the pipe can become too flexible and difficult to control.

## Applications

### Thick Metallic Components and Structures

The thermite reaction lance can be classified as a gross manual-cutting technique capable of cutting any material that is likely to be encountered in a decommissioning project. The maximum depth of cut is unlimited so long as the kerf is kept clear of the molten metal. Therefore, the geometry of the workpiece relative to the flow path necessary for removing the molten metal is the determining factor in the technical feasibility of this technique of metal cutting. Any reinforcing rods in concrete speed the burning by sustaining and assisting the heating process and thus are not a determining factor in technical feasibility.

The thermite reaction lance can be used in either an in-air or underwater environment so long as two operational exceptions are considered: (1) the lance must always be ignited in air and (2) the incident angle of the lance relative to the underwater workpiece must be considered in order to preserve the operator's visibility because large amounts of bubbles form during the process. The cutting rate for this process for a 1-in.-diameter hole has been reported as 12 in./min (provided the molten metal is free to flow away from the kerf) (Oxylance Corporation).

While the technique is being applied, material farther than 1 in. from the hole is not affected. However, the lance generates a significantly greater amount of smoke than any other method and thus is not recommended for remote operations since operator visibility is decreased.

Slits, holes, or openings can be cut in a wide variety of materials with the thermite lance. To cut a slit in a material, a series of holes is first burned through the material. Any material remaining between the holes is then removed, either with the lance or by mechanical methods (e.g., air hammers or sledges). Holes or openings are made by initially framing the area that is to be removed with slits. Once this frame is complete, the material within this area can be removed.

Even though this technique is well suited for cutting irregular surfaces with minimum access, it will be of limited use in segmenting highly activated and contaminated components since significant smoke and off-gases are produced during the process. In this instance, therefore, adequate ventilation must be provided.

The technique was used, however, at (Windscale Advanced Gas Cooled Reactor) WAGR, where the top biological shield was cut in to six pieces (approximately 10 ft each). The top bioshield was constructed of approximately equal quantities of steel and concrete, making the thermite reaction lance the best process to use because it can cut both concrete and steel. The process produced high cutting rates, but improvements to the ventilation system were required to effectively deal with the fumes. Figure 10.18 shows the top biological shield being cut. This process is normally used for low contamination items.

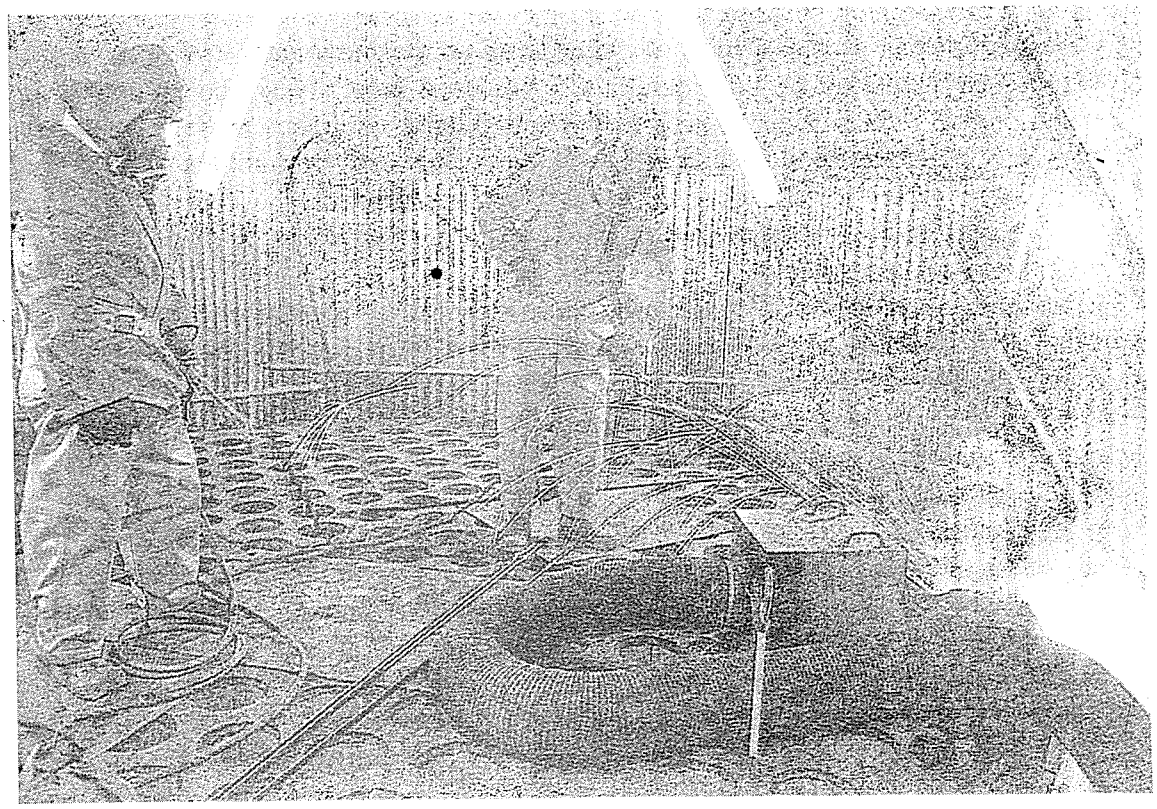

**Figure 10.18. Top biological shield during thermic lance process**

**Piping and Components**

In general, the thermite lance is not intended for use in pipe cutting. Its more practical application is limited to very thick walls or in instances where access is limited, although it can be effective in cutting reinforcing rods and other ancillary components with irregular surfaces. It should be considered only as a gross manual-cutting technique.

### 10.3.2.5 Arc Saw Cutting

**Description of Technique**

The arc saw is an extension of nonconsumable melting electrode technology. It is a circular, toothless saw blade that cuts any conducting metal without physical contact with the workpiece. The cutting action is achieved by maintaining a high-current electric arc between the blade and the material being cut. The blade can be made of any electrically conductive material (e.g., tool steel, mild steel, or copper) with equal success. Figure 10.19 shows the cutting head of an arc saw.

Although rotation of the blade is essential to operation, rotational speed is not a critical parameter: 300–1,800 rpm is acceptable. Blade rotation effects removal of the molten metal generated by the arc in the kerf of the workpiece. The molten material condenses in the form of highly oxidized pellets as it is expelled from the kerf. Rotation serves to cool the blade and to maintain its structural integrity. The arc saw can operate underwater or in air with water spray. The depth of cut is limited by blade diameter, and a maximum cut of 3 ft is considered achievable.

The arc saw is usually operated in a constant-voltage mode using a very fast response, regulated dc power supply. The saw blade is connected to the power supply by a high-current slip-ring device and is at a positive potential of 35–50 V with respect to the workpiece. The cutting process requires that arc current be maintained, the magnitude of which is dependent on the material being cut. The mechanical feed of the saw blade into the workpiece is automatically controlled by a servo mechanism designed to monitor arc current and to position the saw blade to an accuracy of about 0.1 mm. The system requires a specialized power supply with a response time of less than 10 ms. This time is orders of magnitude faster than typical melting or welding equipment supplies. Figure 10.20 is a conceptual schematic of arc saw remote manipulation.

Thin blades (thickness to diameter ratio of about 0.001) are able to achieve greater cutting speeds, whereas thick blades (thickness to diameter ratio of about 0.01) are able to withstand large mechanical forces. There is an obvious tradeoff depending on the application. Blade loss through wear has been shown to be less than 5% of the material removed from the kerf. Actual blade loss is affected by the operating parameters.

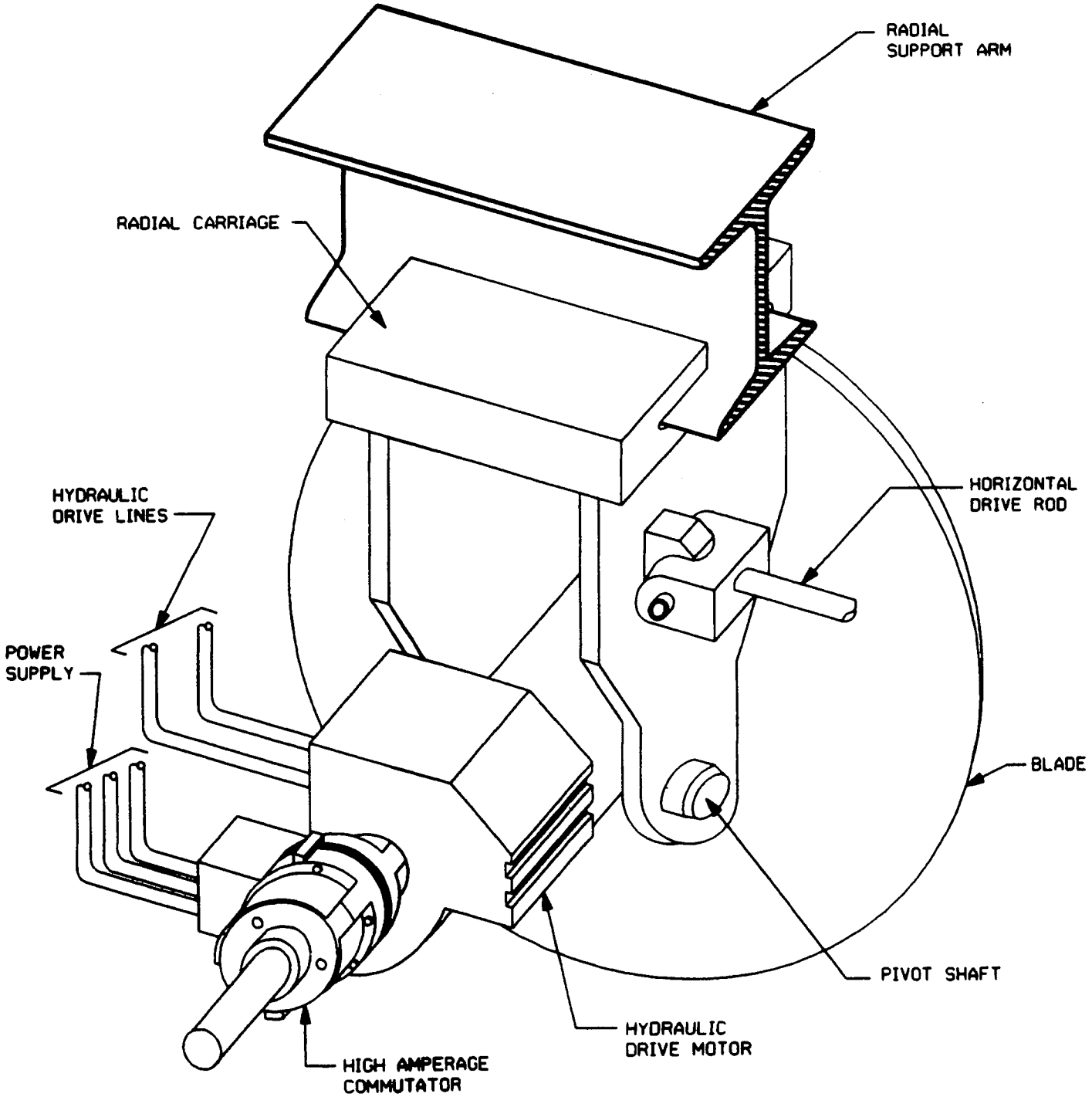


**Figure 10.19. Typical arc saw cutting head**

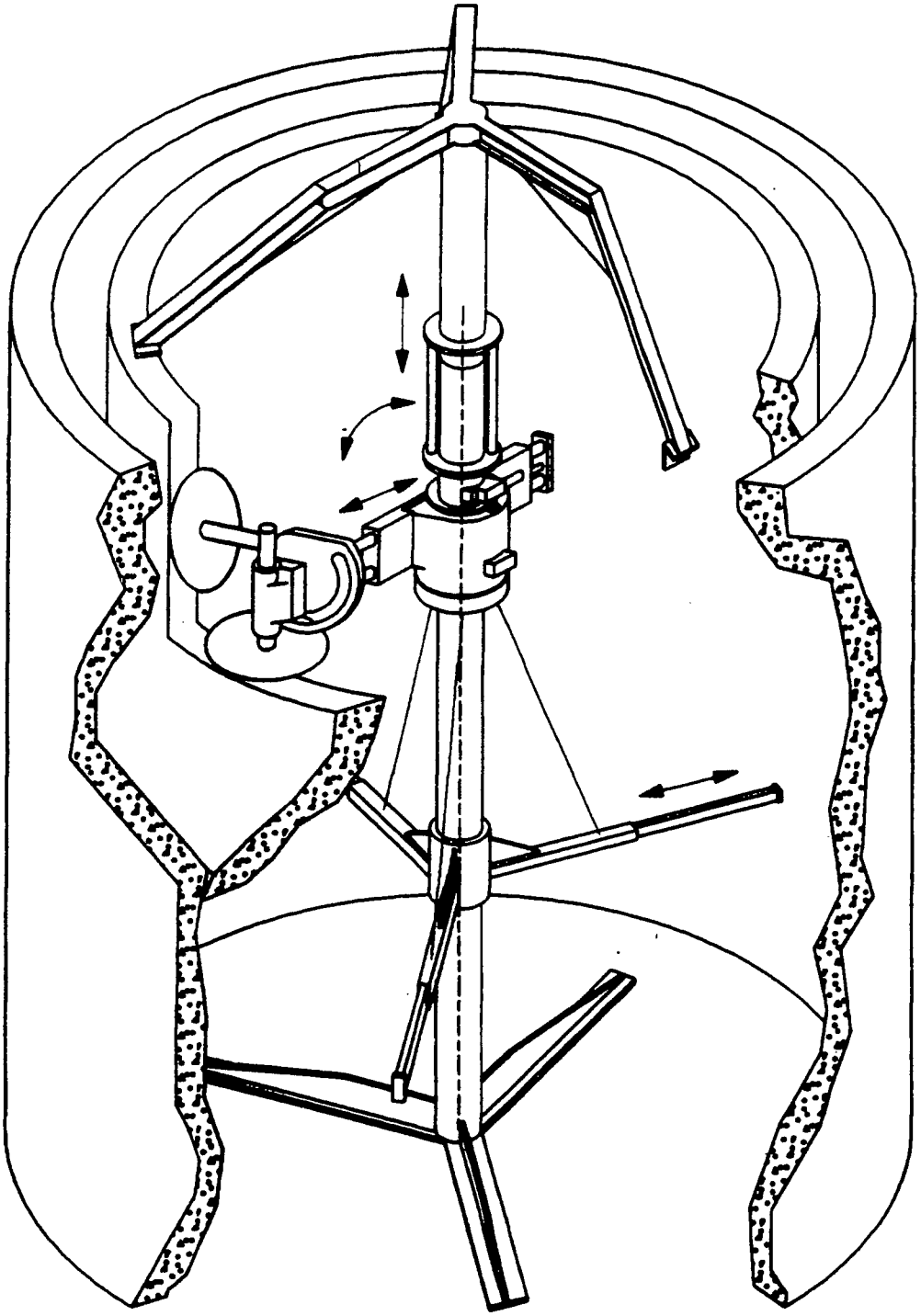

**Figure 10.20. Conceptual schematic of arc saw remote manipulation**

## Applications

### Thick Metallic Components or Structures

The arc saw is capable of cutting any electrically conductive material. High conductivity materials, such as stainless steels, high-alloy steels, aluminum, copper, and inconel, can be cut rapidly and cleanly at rates independent of material strength and ductility. Carbon steel cuts are most difficult to make because slag buildup in the kerf impedes the cutting rate. Magnesium, titanium, and zirconium can be cut with this process, although the arcing will produce some hydrogen gas, with the result that small localized ignitions or detonations may occur.

Arc saw cutting can be performed in air with a water spray or underwater. A major disadvantage to both applications is the space required to accommodate the blade diameter. Drawbacks associated with the in-air method include a rougher cut, the potential necessity of using water to facilitate the cooling of the blade, and the production of significant amounts of smoke and noise. Conversely, the only drawback associated with the underwater method is the potential for murky water during the cutting action, which makes it difficult for the operator to see his or her work. An added benefit with the underwater method is that the kerf produced by this technique is smooth and uniform.

Theoretically, arc saw systems may cut material up to 36-in.-thick. The depth of cut may span solid material or any number of continuous or discontinuous layers of varying thickness and type of materials. The arc saw has been used to cut solid metals up to 8-in.-thick and complex assemblies up to 12-in.-thick. Cuts can be made in vertical and horizontal planes because the angle of entry is not critical. Because there is no metal-to-metal contact between the blade and the workpiece, reaction forces are small.

Reported cutting speeds are as follows: steels—271 in.$^2$/min and aluminum—775 in$^2$/min (DiDonato/Retech). It should be noted that the thinner the material, the higher the cutting speed. These speeds are many times faster than any torch-cutting technique.

The arc saw system should be considered a prime candidate for use in the segmenting of activated reactor vessels and vessel internals. The complex geometries of the internal structures, supports, and flow distributors pose no problem to initiation or continuance of the cutting arc. These cuts can be made underwater, which will provide smooth cuts, less operational noise, high-power cutting efficiency with maximum blade cooling, and good control of the molten radioactive metals. Moreover, the thick-clad sections of the reactor vessel can be cut with the arc saw system, although two practical problems are introduced. First, the wall thickness of a reactor vessel (10–13 in.) will require a blade diameter of 30–40 in. This may pose certain saw-head assembly access problems as well as blade-positioning concerns. Second, most reactor vessels will be best suited for in-air segmenting rather than underwater cutting. This means that the vessel cuts will generate a great deal of noise and smoke and will require larger capacity contamination control envelopes, as well as water and air filtration.

A remotely operated underwater arc saw was used to dismantle the body of the Reactor Pressure Vessel (RPV) at JPDR. In this instance, a temporary cylindrical water tank was installed between RPV and the biological shield so that RPV could be submerged as it was cut. In order to efficiently use the radwaste containers, the body portion was cut into 65 pieces, each approximately 0.9 by 0.9 m (~3 ft by 3 ft by 3 in.) in size. Cutting speeds of 2–12 in./min were achieved.

Approximately 8 months were required to install and remove the cutting system, water tank, and water treatment system; but it only took 50 days to actually cut the RPV.

Table 10.4 shows the operational parameters of arc saw systems developed or proposed.

**Table 10.4. Arc Saw System Parameters**

| Attribute | In Operation | | Design Only | |
|---|---|---|---|---|
| Saw head size (in.) | 18 | 7 | 12 | 16 |
| Maximum blade diameter (in.) | 40 | 30 | 50 | 72 |
| Maximum depth of cut (in.) | 12 | 9 | 15 | 30 |
| Current capacity (A) | 20,000 | 6,000 | 15,000 | 25,000 |
| Operating voltage differential (V) | 25–30 | 25 | 25 | 25 |
| Weight of head and motor (lb) | 450 | 400 | 1,200 | 2,700 |

### 10.3.3 Abrasive Water-Jet Cutting

This section describes a technique in which the cutting action is not mechanical or thermal. In this case the material is eroded away by an abrasive.

The abrasive water-jet cutting technique involves the use of highly pressurized water (as high as 55,000 psi). The water is pressurized by a hydraulically driven intensifier pump. The water flows through a chamber where it is mixed with an abrasive, the most common being crushed garnet. This mixture of water and abrasive is then forced through a wear-resistant nozzle with a small orifice, which focuses the abrasive jet stream at the component being cut. The pressurized jet stream exits the orifice at extremely high velocities, producing erosion that yields a clean cut with a minimal kerf. If this process is applied to contaminated surfaces, the resulting slurry, consisting of cut particles of material (i.e., concrete and reinforcing bar), abrasive, and water, may require collection and treatment.

Because this technique is nonthermal, it does not create any fire hazards. The physical characteristics of stainless and carbon steels are not affected as they are with plasma arc and oxygen burning. This technique can also be used as a decontamination method to scarify

concrete and steels. Different types of abrasives are available, such as quartz sand, corundum, or silica carbide; however, the latter two are very hard and decrease the operating life of the nozzle.

Abrasive water-jet cutting generates large quantities of water and used grit. It is possible to recycle the water, but such a recycling effort requires an ultra-pure filtration system with sufficient capacity to support operations. Without an ultra-pure filter, the cylinders of the intensifier pump will become scored more quickly, making the generation of the necessary high pressure virtually impossible. Moreover, the abrasives may also wear away the recycling system piping components, which could lead to leakage of contaminants. The cost of the filtration system adds to the high cost of the intensifier, making the overall process fairly expensive.

### Applications

The abrasive water-jet technique can cut virtually all materials. It is effective in cutting reinforced concrete; however, multiple passes may be required because the operator may be unable to view the cutting field, and the rebar may not be cut with the first pass. For this reason it is difficult to state cutting rates. During the mock-up at JPDR, blocks 22-in.-wide, 16-in.-deep, and 16-in.-high were cut in 80 min with 4–12 passes and a traverse speed of 12 in./min. Figure 10.21 is a schematic of the water-jet cutting system used to cut the biological shield at JPDR.

This technique is adaptable to underwater cutting, although with a substantial (30–40%) decrease in the maximum depth of cut that can be achieved. This operating efficiency can be improved slightly by an air mantle nozzle. Figure 10.22 shows an abrasive cutting head adapted with an air mantle nozzle, and Figure 10.23 shows the effect of the surrounding media on cutting efficiency.

## 10.4 Detailed Description of Demolition Techniques

Nearly every decommissioning project will require the demolishing of concrete structures. Some of these structures have become activated as a result of neutron bombardment; others have become contaminated from leaking radioactive process fluids during the operation of the facility. These structures range from heavily reinforced, massive concrete, such as the biological shield in a reactor, to lightly reinforced or nonreinforced floors and walls. Biological shields, which are highly activated, present the most difficult demolition task because of the high radiation dose rate.

Many of the demolition techniques used in the decommissioning of nuclear facilities have been adapted from the conventional demolition industry. It should be noted that it may be advantageous to decontaminate the surfaces of a structure if the structure is to be converted to other uses. If possible, the project manager may want to limit segmenting or dismantling activities to those parts of the building that cannot be decontaminated by other processes so that the structural integrity of the remaining portion is not degraded.

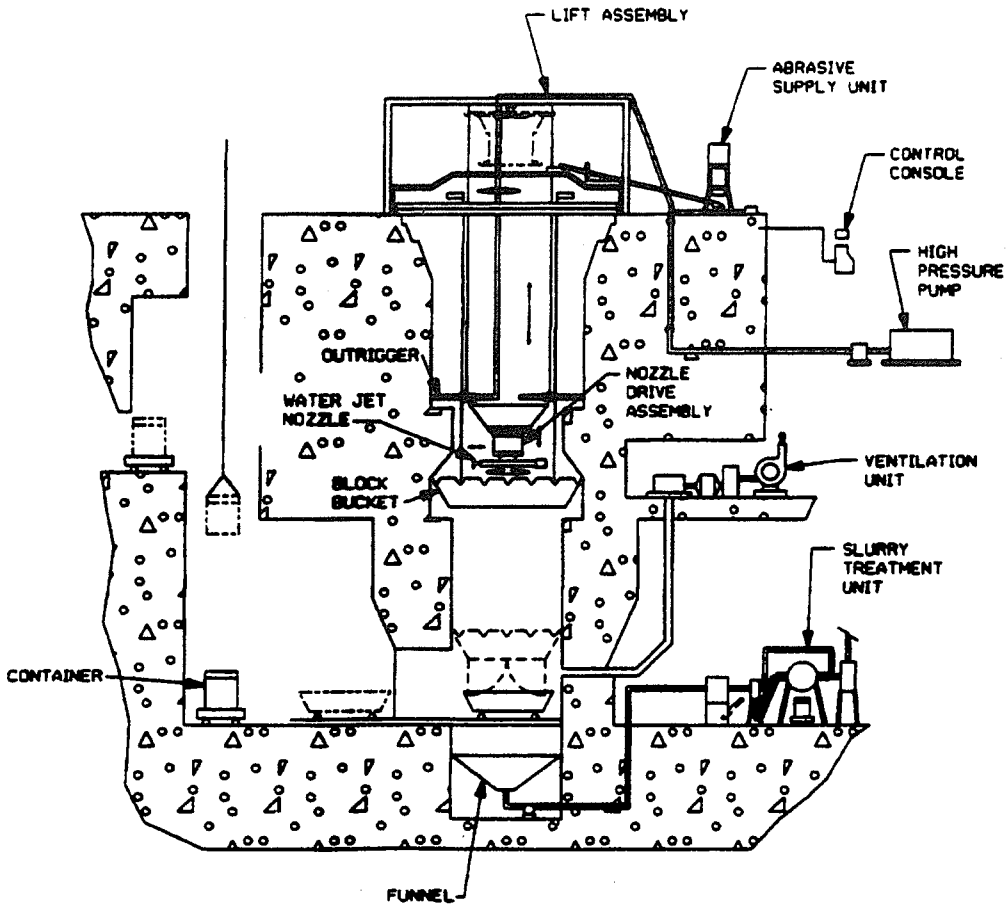


**Figure 10.21. Water-jet cutting system for the removal of a biological shield**

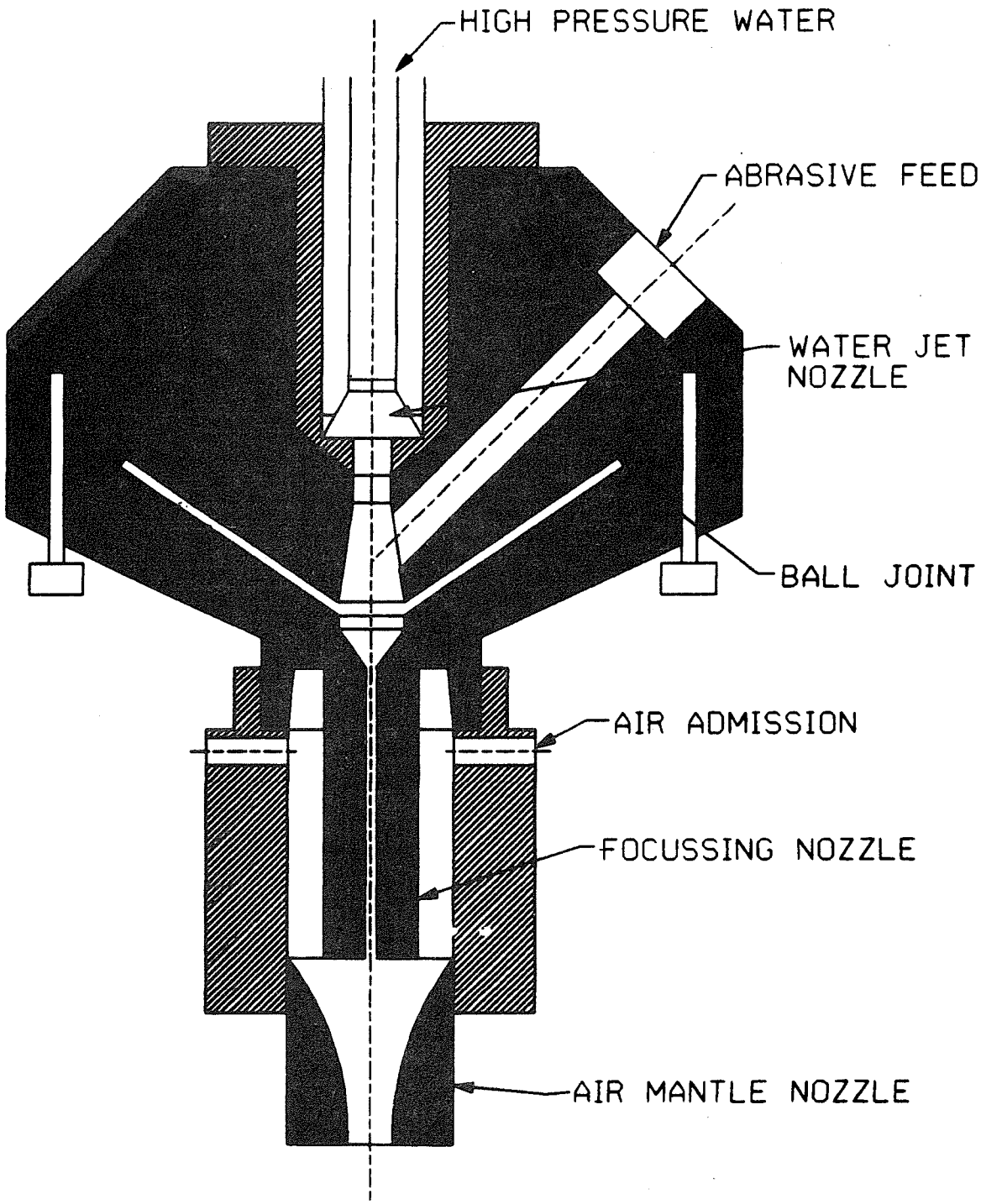


**Figure 10.22. Abrasive cutting head adapted with an air mantle nozzle**

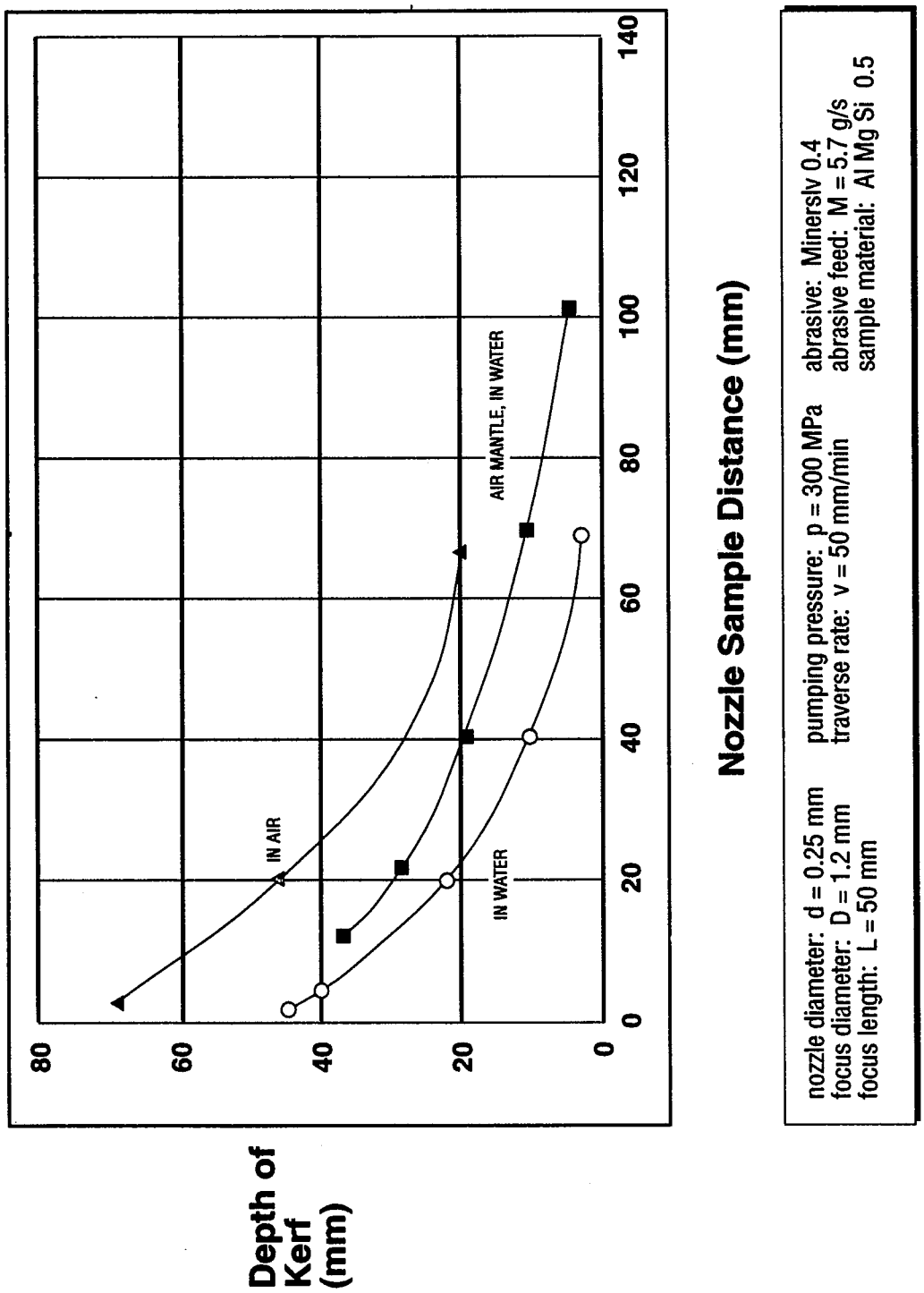


**Figure 10.23. Effect of surrounding medium on cutting efficiency**

The demolition techniques described in this section, broken down into two categories, mechanical and thermal, include the following items.

- Mechanical
  - controlled blasting,
  - wrecking ball or wrecking slab,
  - cable-suspended and excavator-mounted attachments for controlled demolition,
  - expandable grout,
  - rock splitter, and
  - paving breaker or chipping hammer.
- Thermal
  - controlled burning.

Additionally, the following techniques (previously described) are applicable to demolition in that they are used to segment concrete structures:

- wall and floor saws,
- diamond wire,
- explosive cutting,
- core/stitch drilling,
- flame cutting,
- thermite reaction lance, and
- abrasive water jet.

All the techniques identified above are listed in Table 10.2.

### 10.4.1 Mechanical Demolition Techniques

This section describes techniques that demolish structures using mechanical forces and/or actions. These techniques either crush, pulverize, or break apart reinforced and nonreinforced concrete. The actions are driven electrically, pneumatically, or hydraulically.

### 10.4.1.1 Controlled Blasting

**Description of Technique**

Controlled blasting is ideally suited for demolition of massive or heavily reinforced, thick concrete sections. The process consists of drilling holes in the concrete, loading them with explosives, and detonating using a delayed firing technique. The delayed firing increases fragmentation and controls the direction of material movement. Delayed firing also reduces the vibration impact on adjacent structures. Each borehole fractures radially during the detonation. The radial fractures in adjacent boreholes form a fracture plane. The detonation wave separates the fractured surfaces and moves the material towards the structure's free face. Figure 10.24 illustrates a typical blasting round for massive concrete demolition and explains the terminology used in designing a blast; for example, the *burden* is the distance from the free face.

Controlled blasting results in a rapid bulk removal rate, and the maximum depth or thickness for which it is effective is limited only by the drilling depth achievable. It produces moderate vibration, shock, and noise when appropriate controls are used and a moderate amount of dust with the use of a fog spray. A blasting mat must be used to minimize missile generation, and spread of contamination can be controlled with a blasting mat and a fog spray. Consumables associated with this technique are drill bits, explosives, and detonators. The relative cost, therefore, may be high for small volumes of concrete.

It should be noted that the guidance provided herein is intended to aid the user in understanding the controlled blasting technique. Such information is useful in planning a demolition program; estimating labor, schedules, and cost; and identifying the major safety aspects of concrete removal techniques. Under no circumstances should the user embark on a blasting program that is based only on the information provided herein. The services of a certified blasting technician must be retained for the duration of the blasting activities.

Drilling methods for blasthole preparation include percussion air-operated drills, electric-pneumatic or diesel-driven rotary drills, or diamond-core abrasive drills. Percussion drills are the most versatile and can economically drill 1 1/4–2-in.-diameter holes over a wide range of hardness or abrasiveness. Typical percussion drilling equipment is capable of drilling a 6-ft-deep hole in 3 1/2 min. Rotary drills are much larger in diameter (6–9 in.) and are best suited for light concrete without reinforcing rods. Diamond-core abrasive bits are more expensive than percussion drills but their bit life is longer. When cutting through reinforcing rod, abrasive drilling is slower and diamond loss is common.

**Applications**

Controlled blasting is the concrete demolition method recommended for all concrete greater than 2-ft-in thickness, provided the noise and shock to adjacent occupied areas are not limiting. The process is well suited to heavily reinforced concrete demolition because with proper selection of

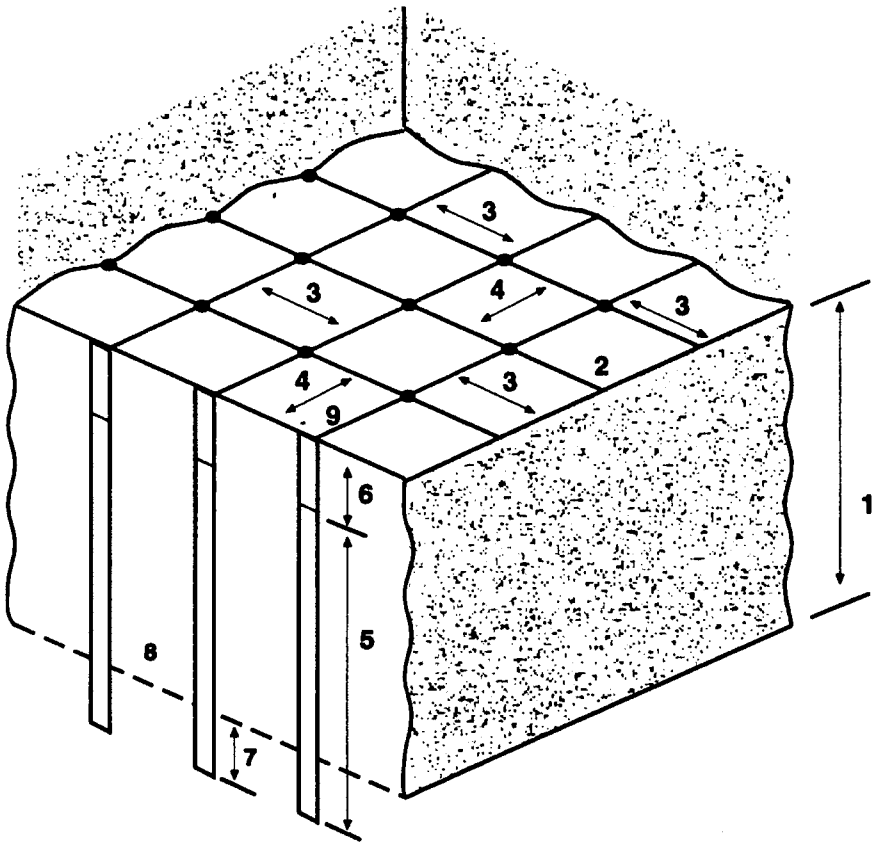


(1) Bench Height
(2) Free Face
(3) Burden
(4) Spacing
(5) Powder Column
(6) Stemming
(7) Subdrilling
(8) Working Floor of Cut
(9) Collar

**Figure 10.24. Blasting round**

the blast parameters a high degree of fragmentation may be achieved. The exposed reinforcing bar may then be cut with an oxyacetylene torch or bolt cutter.

The Elk River Reactor dismantling program used controlled blasting to demolish the 8-ft-thick, steel-reinforced, radioactive biological shield. A blasting mat (composed of automobile tire sidewalls tied together) was placed over the blast area. Continuous fog sprays of water were used before, during, and after the blast to hold down dust. Alternatively, a spray mixture of water and 5%-by-weight sodium silicate (water glass) may be used for dust control as was used in the demolition of the Pratt-Whitney Holt Cell, Lockheed-Georgia Radiation Effects laboratory and NL Industries Laboratory (Levesque and Holman 1978). Typical concrete removal rates are shown in Table 10.5.

**Table 10.5. Concrete Removal Rates Using Controlled Blasting**

| Concrete Type | Removal Rate ($yd^3$/day) |
|---|---|
| Massive reinforced standard concrete (nonradioactive) | 100–400 |
| Massive nonreinforced standard concrete (nonradioactive) | 250 |
| Massive reinforced standard concrete (radioactive) | 4–6*<br>100† |
| Lightly reinforced standard concrete (nonradioactive) | 200 |
| Nonreinforced high-density concrete (radioactive) | 6–8* |
| Lightly reinforced standard concrete (radioactive) | 6–8* |

* Actual removal rates including inefficiency caused by personnel and area contamination control and radiation work area control.

† Higher removal rate possible if adequate space is available to use large capacity loading and hauling equipment.

The wide range of concrete removal rates shown in Table 10.5 is strongly dependent on the variety of work area conditions. Removal of radioactive concrete requires allowance for additional time to suit up with anticontamination coveralls, boots, gloves, headgear, and filtered facemasks (with appropriate time to de-suit for breaks and meals). The exposed face of concrete must be surveyed for radiation dose levels and sampled for radioactive isotopic identification.

In many cases the radioactive concrete is contained in difficult geometric configurations. If access for blasthole drilling equipment is limited, high-speed track-mounted drills may not be used, necessitating the use of slower hand-held drills. Fog sprays must be used to hold down radioactive dust levels. The broken muckpile must be loaded into containers for burial in controlled burial facilities. These special considerations can severely limit the rate of radioactive concrete removal.

According to demolition experts, given adequate access for heavy-duty, state-of-the-art drilling and hauling equipment, much higher removal rates are possible than were achieved at Elk River. Some in the industry maintain that heavily reinforced radioactive concrete can be removed at a rate of up to 100 $yd^3$/day with the use of proper equipment and removal techniques. While nonradioactive heavily reinforced concrete can be removed at rates of between 100 and 400 $yd^3$/day. Cases have been reported of lightly reinforced nonradioactive concrete being removed at rates of up to 1,000 $yd^3$/day. These impressive rates include the drilling, loading, shooting, rebar cutting, and loading the muckpile into hauling equipment.

### 10.4.1.2 Wrecking Ball or Wrecking Slab

**Description of Technique**

The wrecking ball is typically used for demolishing nonreinforced or lightly reinforced concrete structures less than 3-ft-thick. The equipment consists of a 2–5-ton ball or flat slab suspended from a crane boom. The ball may be used with either of two techniques. The preferred method is to raise the ball with a crane 10–20 ft above the structure and release the cable brake, allowing the ball to drop onto the target surface. In this instance, the maximum height of the structure is limited to about 100 ft. This method achieves good fragmentation of the structure and maintains maximum control of the ball after impact. The second method is to swing the ball into the structure using a suck line for recovery after impact. In this instance, the maximum height of structure is limited to about 500 ft because of the instability of the crane during the swing and after impact. The second method is not recommended because the target is more difficult to hit, and because the ball could easily ricochet off the target. If the ball ricochets, it could damage not only the surrounding structures but the crane boom itself because it would be forced to bear side loads. The flat slab can only be used in the vertical drop mode, but it offers the advantage of being able to shear through steel reinforcing rods as well as concrete.

**Applications**

The wrecking ball or slab is recommended for nonradioactive concrete structures less than 3-ft-thick. Controlling the release of dust during demolition would be virtually impossible because of the access needed for the crane to drop or swing the slab or ball. The containment (or confinement) barrier would have to be breached to allow for access, and no method is available to filter the dust-laden air after impact. For nonradioactive structures, however, the wrecking ball is an effective method and provides good fragmentation that readily exposes reinforcing rods.

A wrecking ball used successfully in dismantling the Elk River Reactor containment building but was not successful at the Shippingport and PPA decommissioning projects because the concrete was 4 ft or more in thickness and heavily reinforced. A wrecking ball is not recommended for heavily reinforced concrete.

Typical concrete removal rates with a wrecking ball are shown in Table 10.6, exclusive of loading or disposal.

**Table 10.6. Concrete Removal Rates Using a Wrecking Ball**

| Concrete Type | Removal Rate ($yd^3$/day) |
|---|---|
| Lightly reinforced standard concrete | 40 |
| Nonreinforced standard concrete | 50 |
| Concrete block structures | 60 |

### 10.4.1.3 Cable-Suspended and Excavator-Mounted Attachments for Controlled Demolition

**Description of Technique**

*Controlled demolition* refers to the use of various attachments mounted on an excavator or suspended by cable to disassemble a structure. Basic attachments, which operate off a hydraulic system, include such items as concrete pulverizers, shears, grapples, and rams. These attachments perform the following functions:

- pulverizer—crushes concrete and separates rebar and encased steel beams;
- shears—sever concrete, metals, structural steel, wood, rubber, and plastic;
- grapple—serves as an all-purpose tool for demolition and materials handling; and
- rams—demolish concrete structures (approx 6-ft-thick) using a moil or chisel point.

In addition, a family of interchangeable jaws (concrete pulverizer jaws, shear jaws, and concrete-cracking jaws) is marketed. This line of equipment improves processing, reduces costs, and increases versatility. The attachments can be changed in 20 min to 1 hr, depending on the size of the attachment. Figure 10.25 shows a concrete-cracking jaw in operation as well as a photo

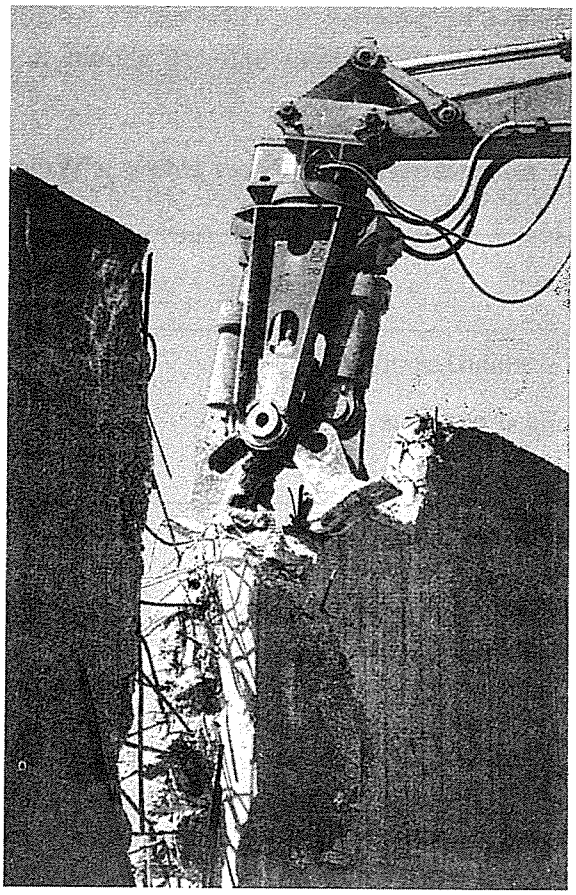

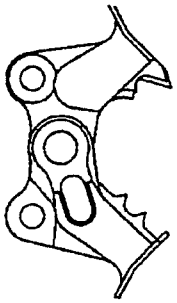

Concrete Pulversizer Jaws

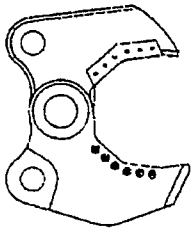

Shear Jaws

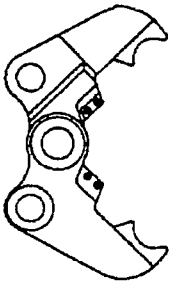

Concrete Cracking Jaws

**Figure 10.25. Concrete pulverizer jaw (above), interchangeable jaws (below)**

and a schematic of the interchangeable jaws. Specially designed attachments that can be suspended by cable in order to take advantage of the long reach of a crane are also available.

## Applications

Cable-suspended or excavator-mounted attachments are recommended for a wide variety of demolition projects. This technique may not be suitable for contaminated concrete given the difficulty in controlling airborne contamination, although spraying water before and during breaking activities may be helpful.

Concrete pulverizer jaws are capable of separating rebar and embedded steel beams from concrete.

Two types of mobile shears are available—plate shears for clean-cutting steel plate up to 1-1/4-in. thick and wood shears for cutting and processing oversized wood products. The plate shears are more applicable to decommissioning and can be used to dismantle above- and below-ground tanks and to cut separated rebar and concrete.

Grapples are versatile and provide for a wide range of uses, such as demolition, scrap recycling, land clearing, and materials handling (e.g., loading rebar, crushed concrete). They can also loosen large concrete slabs from roadbeds. Grapples can be used as an alternative to loaders and buckets as tools for demolition cleanup.

Rams (air powered or hydraulic) are usually mounted on a backhoe because they cannot be suspended by cable. The ram is a resistance-driven tool in that it begins operating as soon as the chisel point touches the workpiece and stops as soon as the chisel is lifted or has cleared the workpiece. Figure 10.26 shows the hydraulic ram used at Shippingport.

Air-powered rams can be used for lightly reinforced concrete that is less than 2-ft-thick. Hydraulic rams can be used for demolition of much larger sections of concrete (up to 6-ft-thick) and are available with heads capable of delivering 7,000–10,000 ft/lb of energy per blow. Operating costs for the ram can be high because it takes so much abuse during the course of a demolition project. Whether or not the workpiece is contaminated, air-powered rams need to be modified so that air is directed away from the work area.

A concrete pulverizing jaw was suspended by cable from a 330-ft crane to demolish three smokestacks from a former steam-generating plant in Winnipeg. The unit was fitted with custom-stabilizing legs to provide safe, controlled demolition. The jaws were placed over the rim of each stack and then proceeded down. The crew consisted of five people, and the actual working time was approximately 30 days (not including time lost because of high winds). It should be noted that operators may not be able to control the machine with cable-suspended attachments and a long boom length in wind.

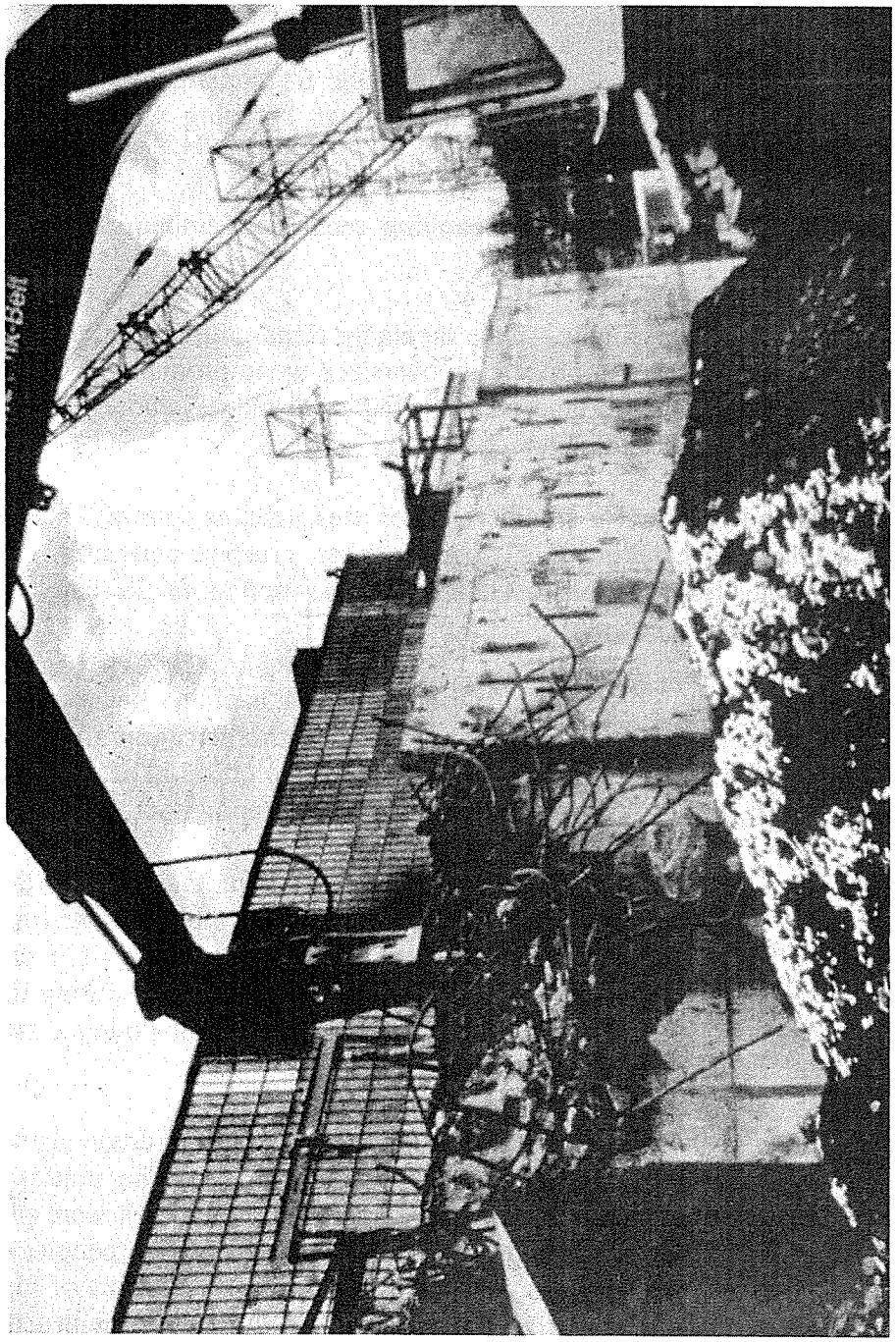

**Figure 10.26. Hydraulic ram used at Shippingport**

During the decommissioning of Shippingport, a 10,000 ft/lb, hydraulically operated, backhoe-mounted ram was used with good success to demolish heavily reinforced concrete walls.

While the backhoe was out of service, attempts were made to use a wrecking ball to achieve the same results. However, results were not satisfactory and use of the wrecking ball was discontinued.

### 10.4.1.4 Expansive Grout

**Description of Technique**

Expansive grout is a material used to fracture concrete. The material, which is similar in property to portland cement, is mixed with water and poured into predrilled holes where it is allowed to cure. As it cures, it expands, cracking the workpiece so that it may be removed.

Because the compound works against the tensile strength of concrete (usually between 200 to 425 psi) this nonexplosive, vibration-free process may be used to crack concrete of any size, reinforced or nonreinforced, provided it has a free face to which it may expand. The extent and direction of cracking is controlled by hole spacing, hole depth, and hole diameter. As the material hydrates, it expands, with the result that cracks are first initiated, propagated, and widened. The fractured burden may be removed by demolition hammer, jackhammer, paving breaker, or backhoe. If reinforcing rods are encountered, they must be cut separately. The material has the same hazardous material classification as portland cement; so storage, handling, and disposal requirements are similar. Dust control measures are required during the drilling and removal phases.

The recommended hole sizes and their corresponding burden, spacing, and depth for reinforced massive concrete structures are shown in Table 10.7.

**Applications**

The compound can be used to remove any massive concrete structure (reinforced or nonreinforced). If it is used with reinforced concrete, however, the holes should be located along the plane of reinforcing rod so the fractured surface will expose the rods. This method can also be used for segmenting vitrified blocks, fracturing concrete slabs, and vibration-free removal of thin slabs. Removal rates vary based on application but can approach those of controlled blasting on large jobs.

During the PPA decommissioning, the compound was used to separate activated concrete from the remaining concrete blocks, which were removed from the accelerator floor by a diamond-wire saw. This separation allowed for efficient use of burial containers, thereby reducing burial costs.

**Table 10.7. Recommended Demolition Fracturing Compound Parameters for Reinforced Massive Concrete**

| Hole Size (in.) | | |
|---|---|---|
| Parameter | 1.5 in. | 2 in. |
| Burden (see Figure 11.28) | 6–15 in. | 6 in.–2.5 ft |
| Spacing | 8–15 in. | 1–2.5 ft |
| Minimum depth | 6 in. | 8 in. |
| Maximum depth | no limit | no limit |

### 10.4.1.5 Rock Splitter

**Description of Process**

The rock splitter is a method for fracturing rock or concrete by hydraulically driving a wedge-shaped plug between two expandable guides (called *feathers*) into a predrilled hole until tensile stresses are high enough to cause the rock or concrete to fracture. Figure 10.27 shows a schematic of the operating principle of a rock splitter.

The unit is powered by a hydraulic supply system and operates at 7,100 psi. When the plug is extended and fracture occurs, an automatic pressure relief valve lowers the pressure to 900 psi. With the unit in neutral position the pressure drops to 50 psi. The hydraulic unit may be powered by air pressure, gasoline engine, or electric motor.

Units are available that can deliver splitting forces that approach 350 tons. The maximum lateral expansion of the feathers is approximately 0.75 in. Concrete may be separated at the fracture line using a backhoe-mounted air-powered ram or similar equipment. The reinforcing rod, if present, must be cut before separation is possible. Exposed rebar should also be separated from the rubble. For heavily reinforced concrete, additional holes and fractures may be necessary to expose the reinforcing rods.

**Applications**

The splitter is ideally suited for fracturing nonradioactive concrete in limited access areas where large air-powered rams cannot be operated or the use of explosives is unacceptable. Compared with a hoe ram, this technique is silent (except for hole drilling) and is used extensively for demolition near hospitals and other densely populated areas. The drilling phase of the process

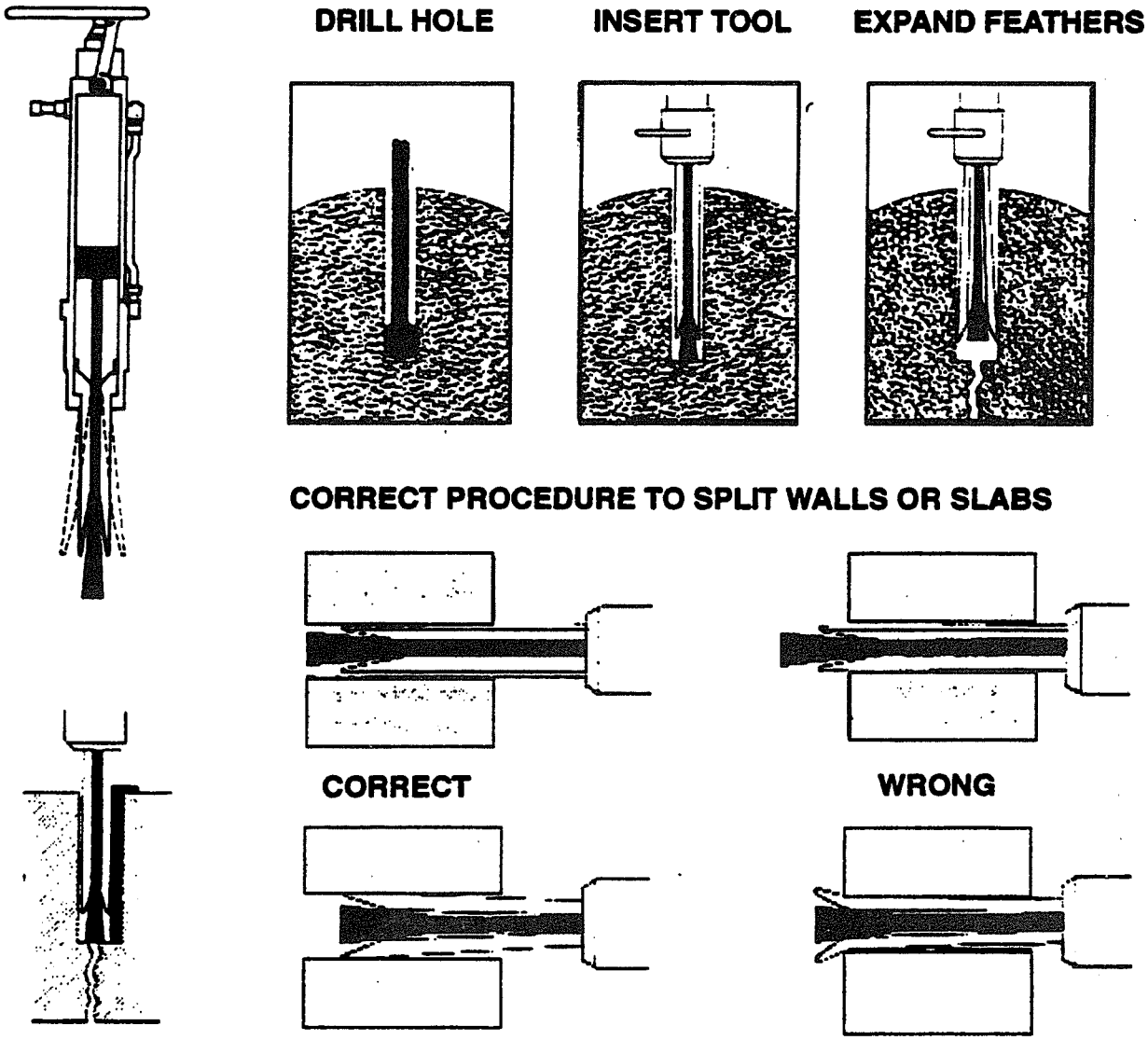


**Figure 10.27. Schematic of the operating principle of a rock splitter**

generates dust that is difficult to control. Hole sizes range from 1 3/16 to 1 3/4 in., with a depth of 12–26 in., depending on the size of the unit selected. For massive concrete sections, holes may be drilled from 1 to 3 ft apart to establish a fracture line. Drilling and splitting time requires approximately 5–10 min per hole. Removal time is dependent on the amount of reinforcing rod, the accessibility for heavy removal equipment, and the amount of contamination control measures necessary. Removal rates of 250 $yd^3$/day have been demonstrated for noncontaminated, reinforced concrete. Reinforced concrete sections up to 8 ft thick may be cut with a single large unit. Reinforced concrete sections of 10-ft thickness will require two or more large units operated simultaneously.

### 10.4.1.6 Paving Breaker or Chipping Hammer

**Description of Technique**

Paving breakers or chipping hammers remove concrete (and asphalt) by mechanically fracturing localized sections of the surface. Fracturing is caused when the hardened tool steel bit, which is shaped like a chisel or a moil, impacts the workpiece. The bit is driven in a reciprocating motion by either a compressed-air or hydraulic-fluid pressure source. Removed material is collected, treated, and/or disposed of.

Paving breakers (e.g., jackhammers, pneumatic drills) weigh approximately 35–100 lbs and are intended for use on floors. They deliver about 1,500 blows per minute at up to 95 ft/lb of energy per blow, depending on the size of the unit. Typical sizes and capacities of paving breakers (pneumatic and hydraulic) are shown in Table 10.8.

**Table 10.8. Paving Breaker—Size and Capacity**

| | Unit Weight (lb) | | |
|---|---|---|---|
| **Atribute** | **35** | **65** | **90** |
| Moil point diameter (in.) | 7/8 | 1 1/4 | 1 1/4 |
| Blows/minute | 1,600 | 1,400 | 1,300 |
| Energy/blow (ft/lb) | 34 | 80 | 95 |
| Air compressor size (cfm @ 100 psi) | 40–150 | 40–150 | 40–150 |
| Hydraulic system (gpm @ 2,000 psi) | 7–9 | 7–9 | 7–9 |
| Removal rate ($yd^3$/day) (nonreinforced concrete) | Not available | Not available | 20 |

The chipping hammer is similar in concept to the paving breaker but is light enough (15–35 lb) to be hand held for use on walls or ceilings. Chipping hammers deliver about 2,000 blows per minute. Table 10.9 lists operational parameters of the units.

**Table 10.9. Chipping Hammer Operational Parameters**

| Attribute | Parameter |
|---|---|
| Unit weight (lb) | 24 |
| Moil point diameter (in.) | 5/8 |
| Blows/minute | 2,000 |
| Air compressor size (cfm @ 100 psi) | 50 |
| Hydraulic system (gpm @ 2,000 psi) | 7–9 |
| Removal rate ($ft^3$/day) (nonreinforced concrete) | 27 |

**Applications**

Paving breakers are recommended for use on floors to remove small areas that are inaccessible to heavy equipment. They may also be used after controlled blasting to expose reinforcing rods so that they may be cut. The chisel point may be used to scarify surface areas of concrete floors where localized contamination may be present, and chipping hammers may be used on walls for the same purpose. Contamination control may be accomplished using water or fog sprays.

### 10.4.2 Thermal Demolition—Controlled Burning

Thermal demolition techniques do not use mechanical force to demolish a structure; instead, thermal means are used to burn it to the ground. The demolition of a structure by controlled burning is simple in theory: a fire is set and allowed to burn. However, certain considerations must be addressed prior to employing this technique. For example, proper permits must be obtained from the site and/or local fire department, combustibles (i.e., vapors) and friable materials (e.g., asbestos) must be removed from the building to prevent detonations, and any materials that may produce hazardous fumes must be removed prior to the application of the process.

This technique is applicable to uncontaminated buildings constructed of combustible materials (e.g., wood). These structures usually include nonprocess buildings such as warehouses and office buildings. Wooden cooling towers have been demolished by controlled burning.

## 10.5 Emerging Technologies

This section describes techniques that are in various stages of development or experimentation. Advances and/or variations in other conventional proven techniques are also identified here. Although each of these techniques is promising, their use in a decommissioning project has not yet been established and/or they are currently not cost-effective. Research and development in these areas may make these techniques practical for decommissioning. The following is a list of techniques described in this section:

- liquified gas cutting,
- electro-discharge machining,
- mechanical disintegration machining,
- laser cutting, and
- shape memory alloys.

For completeness, these techniques have been included in either Table 10.1 or Table 10.2.

### 10.5.1 Liquified Gas Cutting

Liquified gas cutting is similar in principle to water-jet cutting except that the cutting medium is liquified gas. Advantages to this technique are much like those of $CO_2$ blasting, in which the cut material is lifted from the surface by evaporating gas. Because the surface is being cut by a liquid instead of a back-and-forth abrasive cutting motion, there is less chance that any potential contamination associated with the cut can be pushed deeper into the surface of the workpiece. Given the low temperatures involved, it may be advantageous to cut at temperatures below the metal's embrittlement temperature.

### 10.5.2 Electro-Discharge Machining

Electro-discharge machining (EDM) is based on the principle of thermomechanical erosion in metals through the accurate control of fine electrical discharges (i.e., sparks). The spark is generated through the gap between two charged electrodes, a cutting tool and a workpiece, both of which are submerged in dielectric fluid. As the tool is energized, a potential difference is established with the workpiece, which is large enough to cause a breakdown of the dielectric fluid. Arcing then occurs across the gap, resulting in localized heating. Small molten particles lift off the surface of the metal as a result of the thermal expansion caused by the localized

heating. The dielectric fluid also acts as a cooling medium that resolidifies the particles and carries them away from the workpiece. A local filtration system collects the particles.

The cutting rates are proportional to the amount of energy at the gap between the tool and the workpiece. The gap controls the energy and is therefore critical to the process. The system operator can adjust the gap as a function of voltage across the gap. The frequency of the discharges controls the resulting surface finish. Higher discharge rates produce rougher surfaces, which in decommissioning activities may be of little concern. Removal rates are influenced by the average current in the discharge circuit; they are a function of the electrode characteristics, the electrical parameters, and the nature of the dielectric fluid. In practice, this rate is normally varied by changing the number of discharges per second or the energy per discharge. The tool has great influence on removal rates. It is usually made of copper-tungsten, graphite, or copper alloys. Tool wear is important to both cost and tolerances. The ratio of tool material removed to workpiece material removed varies with different combinations and should be kept low.

All materials that are sufficiently good conductors of electricity can be cut with this process. By utilizing electrodes fabricated in the shape of the desired hole, penetrations in virtually any shape can be made with EDM. An approximation of removal rates for a continuous operation is 5 in. $^3$/hr. This is relatively slow compared with other methods. This technique has the benefit of not generating any material chips, slag, or other large particles; and it can be performed at low temperatures. Because the tool does not come in contact with the workpiece, reactive machining forces are low, a factor that makes this process amenable to remote operations.

The EDM technique has been used in support of nuclear power plant modifications. Because the process is performed in a dielectric fluid, it is ideally suited for underwater applications. EDM has been used in several Westinghouse PWRs to perform underwater modifications to the plates in the lower core-plate assembly. Approximately 2 hr were required to machine a 2-in.-diameter hole in 3-in.-thick steel.

### 10.5.3 Metal Disintegration Machining

Metal disintegration machining (MDM) is similar to the EDM technique, except that the cutting pulses are generated by vibrating the electrode. It uses a constant-current power source. A potential difference is established across the gap as the electrode (i.e., tool) is brought close to the workpiece. This causes a very high-energy pulse to be generated just as the tool makes physical contact (unlike EDM) with the workpiece. The principal differences between MDM and EDM are as follows:

- simpler electronics because of the constant-current power supply,
- lesser degree of control of cut rate and surface finish,
- less wear on tool, and

- higher reactionary machining forces because of contact with workpiece.

Overall MDM is faster but less precise than EDM.

The applications of this process are essentially the same as the EDM process.

### 10.5.4 Laser Cutting

The laser cutting technique involves using a laser beam to heat a metal past its melting point, thereby cutting it. The molten or vaporized material is sometimes removed with an assist gas stream. Commonly used assist gases are air, oxygen, nitrogen, and argon. A typical system consists of a gas laser resonator, a beam guide, a beam-focusing system, and a cutting nozzle.

The laser cutting technique is an excellent process to use in dismantling and decommissioning projects because it is highly efficient: it can melt (i.e., cut) almost any material, including iron, steel, and concrete; it does not vibrate or produce any noises except those of the gas jet; it generates little dust and/or fumes since the kerf is narrow; and it is simple and easy to maintain since most of the parts (with the exception of the resonator) are long wearing. Moreover, the system is readily adaptable to remote operations and robotics since the cutting method does not actually contact the surface of the workpiece and no reaction forces are generated. For example, since the laser beams do not expand appreciably as they pass through the air, beam guides and optical systems can be used to direct the beam from the resonator, which can be located in a fixed position, straight to the cutting point.

For all these benefits, however, there are two rather major drawbacks to the system as it currently exists: its cutting depth and speed and its anticipated high capital costs. For example, experiments have produced cutting depths of only ~12 in. in nonreinforced concrete (Obayashi Corporation 1992).

### 10.5.5 Shape Memory Alloys

Shape memory alloys (SMAs) are novel materials in that they have the ability to return to a predetermined shape when heated. When an SMA is cold or below its transformation temperature, it has a very low yield strength and can be deformed quite easily into any new shape, which it retains. However, when the material is heated above its transformation temperature, it undergoes a change in crystal structure, which causes it to return to its original shape. If the SMA encounters any resistance during its transformation, it can generate extremely large forces. This phenomenon provides a unique mechanism for remote application.

The most common shape memory material is an alloy of nickel and titanium called *Nitinol*. This particular alloy has very good electrical and mechanical properties, long operating life, and high corrosion resistance. As an actuator, it is capable of up to 5% strain recovery and 50,000 psi restoration stress with many cycles. For example, a 16-lb weight placed on a compressed spring can be lifted when heat is applied to the spring. Nitinol also has the resistance properties that

enable it to be actuated electrically by joule heating. When an electrical current is passed directly through the wire, it can generate enough heat to cause the phase transformation. In most cases, the transition temperature of the SMA is chosen so that room temperature is well below the transformation point of the material. Only with the intentional addition of heat can the SMA exhibit actuation. In essence, Nitinol is an actuator, sensor, and heater all in one material (TiNi).

Similar to expandable grout, SMA can be used to break up concrete structures. A palm-sized, tube-like device, developed in Japan, called Memo-Alloy Splitter (nicknamed *concrete buster*) consists of six 1.14-in. SMA cylinders, each composed of an alloy of 50.5% Ni and 49.5% titanium, that are mounted vertically between pairs of tempered steel plates. The entire assembly is wedged into a hole drilled into the concrete, and the cylinders are then heated through internal wires. When the temperature reaches between 122 to 176°F, the cylinders return to their original shape, stretching 0.05 in. This generates a force of approximately 10 tons, more than enough to shatter concrete.

Usually 5 to 10 concrete busters are positioned across the fracture plane. Within 2 min of being heated, the concrete cracks. Just as with expandable grout, the fractured burden may be removed by demolition hammer, jackhammer, paving breaker, or backhoe. If reinforcing rods are encountered, they must be cut separately. Dust-control measures are only required during drilling and removal phases.

## 10.6 Conclusion

This chapter presents various mechanical and thermal dismantling, segmenting, and demolition techniques that can be used in a decommissioning project. Some of the techniques identified can be used to segment metal components as well as concrete structures. The techniques are summarized in two tables (metal applications and concrete applications), which allows the reader to make simple comparisons.

## 10.7 References

Allen, R. P., L. K. Fetrow, and F. E. Haun. 1987. "Metal Segmenting Using Abrasive and Reciprocating Saws." *Proceedings of the 1987 International Decommissioning Symposium.* Pittsburgh, Pennsylvania, October 4–8, 1987. Ed. G. A. Tarcza. CONF-871018. Vol. 2. Westinghouse Hanford Company. Richland, Washington.

American Oxylance™. Product information for Lance Pipe and Exothermic Torch. Birmingham, Alabama.

Avallone, E. A., and T. Baumeister, eds. 1987. *Marks' Standard Handbook for Mechanical Engineers.* 9th ed. McGraw-Hill. New York.

AWS (American Welding Society). "Plasma Arc Cutting." Section 3, Part A, in *Welding Handbook.* 6th ed. Miami.

Baumeister, T., and L. S. Marks. *Standard Handbook for Mechanical Engineers.* 7th ed. McGraw-Hill.

Beckmen, T. R., and J. Bjerler. "Diamond Wire Cutting of Heat Exchangers." In *The 1st JSME/ASME Joint International Conference on Nuclear Engineering.* Vol. 2. November 4–7, 1991. Tokyo.

Boing, L. E., et al. "An Evaluation of Alternative Reactor Vessel Cutting Technologies for the Decommissioning of the Experimental Boiling Water Reactor at Argonne National Laboratory." *Environmental Remediation '91: Cleaning Up the Environment for the 21st Century.* Proceedings of the ER'91 Conference, Pasco, Washington, September 8–11, 1991.

Brant, A. W., "Why it is Important Not to Get Too Carried Away with Technology," Nuclear Engineering International, July 1989.

Demolition Technologies, Incorporated. Product information for BRISTAR demolition agent. Greenville, Alabama.

Diamond Abrasives Corporation. *Diamonds in Industry: Building and Construction.* De Beers Industrial Diamond Division. Charters, England.

DiDonato/Retech, October 8, 1993. Personal communication with L. Leland.

DiDonato, B. August 23, 1993. Personal communication with N. Jenkins (Demolition Technologies).

DiDonato, B. June 20, 1993. Personal Communication with D. Neaman (Smith Equipment Co.). June 30, 1993.

E. H. Wachs Company. Product information bulletin. Wheeling, Illinois.

Esco Tool® Company, Incorporated. Product information for Tube and Pipe Precision End Prep and Cutting Tools. Medfield, Massachusetts.

Explosive Technology, Inc. Product information for Jetcord® explosive charge. Fairfield, California.

Flow International. Product information for abrasive water-jet cutting

Garner, R. May 1991. "Concrete Busters." *Business Tokyo.*

GE (General Electric) Superabrasives. Product information for core stitch drilling and diamond wire cutting. Worthington, Ohio.

Haferkamp, H., H. Louis, and G. Meier. 1989. "Submerged Cutting of Steel by Abrasive Water Jets." In *Decommissioning of Nuclear Installations: Proceedings of the 1989 International Conference*. Brussels, Belgium, October 24–27, 1989.

Harada, M., I. Yokota, and M. Yokota. 1991. "Study on Technology of Reactor Dismantling by Abrasive Water Jet Cutting System." In *The 1st JSME/ASME Joint International Conference on Nuclear Engineering*. Vol. 2. Tokyo. November 4–7, 1991.

Hoshi, T., et al. "Decommissioning Experience of the Japan Power Demonstration Reactor." In *Proceedings of the Institute of Mechanical Engineers. Nuclear Decon '92: Decommissioning of Radioactive Facilities*. London, February 17–19, 1992. Mechanical Engineering Publications Limited, Bury St. Edmunds. Suffolk, England.

K&S Engineering. Jet Edge literature.

Koike Aronson, Incorporated. 1992. Product information for Portable Cutting Equipment and and Cutting Machines. Arcade, New York.

Kutsumizu, A. 1992. "Research and Development of Laser Cutting Technology and Robots Used for Dismantling Nuclear Power Facilities." *Obayashi Corporation*. Tokyo.

LaBounty® Manufacturing, Incorporated. Product information bulletin for excavator-mounted and cable-suspended attachments. Two Harbors, Minnesota.

Levesque, R. G., and E. C. Holman. 1978. "Radiological Protection Problems Associated with Removal of Biological Shields." Presented at the ANS Winter Meeting in Washington, D.C., November 14, 1978.

Lorin, C., R. Rouviere, and G. Pilot. 1989. "Adaptation of High Pressure Water Jets and Abrasives to Dismantle Nuclear Installations." In *Decommissioning of Nuclear Installations: Proceedings of the 1989 International Conference*. Brussels, Belgium, October 24–27, 1989.

MacDonald Air Tool Corporation. Product information bulletin for Hydraulic Rock and Concrete Splitter GD-8. Hackensack, New Jersey.

McGough, M. S., W. E. Austin, and G. Knetl. 1988. "Performance of the Automated Cutting Equipment System During the Plasma Cutting of the TMI-2 Lower Core Support Assembly." *Transactions of the American Nuclear Society* Vol. 57.

Machtech, Inc. Product information for clamshell lathe. Redwing, Minnesota.

Matsumoto, O., et al. 1990. "Cutting Technique for Reactor Internals by Laser Beam." In *Proceedings of the International Topical Meeting on Nuclear and Hazardous Waste Management: Spectrum '90.* Knoxville, Tennessee, September 30 through October 4, 1990. American Nuclear Society, Incorporated. La Grange Park, Illinois.

NEA (Nuclear Energy Agency), Organization for Economic Co-operation and Development. *International Co-Operation on Decommissioning: Achievements of the NEA Co-Operative Programme, 1985–1990.* Paris.

Nemec, J. F., R. M. Beckers, and R. Blumberg. 1973. "Radioactive Operations in the Dismantling of the Elk River Reactor." Presented at the 19th Annual Meeting of the American Nuclear Society, Chicago, June 10–14, 1973.

Obayashi Corporation, 1992. *Research and Development of Laser Cutting Technology and Robots used for Dismantling Nuclear Power Facilities.* Tokyo, Japan.

Oxylance Corporation. *The WEKA Oxylance.* Engineering Report 721-1. Atlanta.

Reed. Product information on hinged cutter and rotary cutter.

TiNi Alloy Company. September 22, 1993. Product information bulletin for shape memory alloys and applications. San Leandro, California.

Tokai Research Establishment. March 1990. *Reactor Decommissioning Technology Development and Actual Dismantling of JPDR.* Published by Department of JPDR, Japan Atomic Energy Research Institute.

Photo and Illustration Credits

| | |
|---|---|
| Figure 10.3 | E.H. Wachs Co.; Wheeling, IL |
| Figure 10.4 | E.H. Wachs Co.; Wheeling, IL |
| Figure 10.5 | Machtech, Inc.; Red Wing, MN |
| Figure 10.6 | Reed Manufacturing Co.; Erie, PA |
| Figure 10.8 | Diamond Abrasives Corp.; New York, NY |
| Figure 10.9 | Diamond Abrasives Corp.; New York, NY |
| Figure 10.11 | Explosive Technology; Fairfield, CA |

| | |
|---|---|
| Figure 10.12 | GE Superabrasives; Worthington, OH |
| Figure 10.13 | Smith Equipment Co.; Watertown, SD |
| Figure 10.16 | Koike Aronson, Inc.; Arcade, NY |
| Figure 10.17 | Koike Aronson, Inc.; Arcade, NY |
| Figure 10.19 | Retech Inc.; Ukiah, CA |
| Figure 10.20 | Retech Inc.; Ukiah, CA |
| Figure 10.25 | LaBounty Manufacturing; Two Harbors, MN |
| Figure 10.27 | MacDonald Air Tool Corp.; So. Hackensack, NJ |

# 11.0 REMOTE HANDLING EQUIPMENT AND OPERATIONS

This chapter describes the remote technologies that can be used in decommissioning in areas that are inaccessible or are unsafe for occupancy. It includes some examples of how remote technologies have been used in previous decommissioning projects and how remote technologies are being developed for use in the future. This chapter does not address the design features or requirements that should be considered during the design, fabrication, installation, operation, and maintenance of remote equipment or operations. Section 11.1 explains why remote technology would be considered in a decommissioning project, and Section 11.2 describes what can be operated remotely. The configurations of remote systems are detailed in Section 11.3; and applications of remote techniques in previous, current, and future decommissioning projects are discussed in Section 11.4.

## 11.1 Basis of Remote Operation

All of the technologies described in this handbook require manual actions to accomplish a task, even if only to turn the equipment on and off. In almost all situations, hands-on operation by the worker is acceptable, but in certain situations it is not. For example, when a work area contains a hazardous environment, such as a high radiation field or a mercury-contaminated atmosphere, human presence should be limited to maintain safe operating conditions. For a manually operated system, limiting human presence means limiting operating time and productivity. Therefore, it is often desirable to provide equipment that can be operated from outside the hazardous environment to overcome these limits. This is the primary reason for using remotely operated equipment; some other reasons include productivity improvement, utilization of facility resources, reduction in cost, and accessibility to hard-to-reach work areas.

In decommissioning projects where remote equipment would enter hazardous environments, it is important to remember that the equipment should be kept simple or be proven under a variety of similar circumstances. This is done to ensure the success of the equipment and to prevent time, effort, and exposure to hazardous environments caused by retrieving a failed piece of remotely operated equipment.

### 11.1.1 Enhanced Safety

Some commercial nuclear power plants require repair or maintenance of primary system equipment, such as steam generators. Because these areas are highly radioactive, workers who enter these fields can receive their legal quarterly dose limit in only a few minutes of work on the equipment, so more workers are required to complete each task. These labor- and exposure-intensive activities adversely affect the goals of reducing worker exposure and lowering operating and maintenance costs. Remote equipment that can tolerate these high radiation fields while performing the required tasks are beneficial to reducing both cost and exposure (Glass 1993),

### 11.1.2 Cost Reduction

The use of remotely operated equipment can result in cost reductions as well. The first example for cost reduction is the same as for the reduction of personnel exposures. To perform a manual task in a high radiation field, many workers are required to avoid overdosing the workers. Therefore, there are additional expenses associated with the numbers of workers employed for the high radiation task. In other words, since the remote equipment operating in the high radiation field replaces many human workers, the employment costs of those human workers is saved.

Another aspect of remote operations for cost reduction is accessibility. Remotely operated detection devices can be inserted into piping and areas in the nuclear facility that are too small for human entry. The survey of the pipes can show that the pipes are not contaminated and can remain in the facility after decommissioning. This reduces the cost for removal of potentially contaminated materials as well as reducing the material requiring disposal in a properly designed disposal facility.

### 11.1.3 Productivity Improvement

Because of the cumbersome nature of some protective clothing, worker efficiency can be greatly reduced. In addition, workers may need to participate in multiple rehearsals to train for a task before it is performed. Thus, the overhead to accomplish a task in an area with a hazard such as a high radiation field is very large. When remotely operated equipment can be used to accomplish the task, fewer workers are required. Even though the operator of a remote system will require training to be able to perform a given task effectively, the overall workhour requirement is lower, which increases productivity.

### 11.1.4 Utilization of Facility Resources

A facility to be decommissioned often already contains remote equipment. Such equipment can be used in the decommissioning effort. For instance, teleoperated manipulators such as master-slave manipulators or electromechanical manipulators may be used to aid the decommissioning of the areas in which they are installed. Remotely operated cranes, fuel handling machines, and other equipment can be used in decommissioning as they were used during operation. Such possibilities should be extensively researched, because using existing equipment will reduce the overall cost for the decommissioning project.

### 11.1.5 Accessibility

Remote equipment can provide access to work locations that operators cannot physically enter. For example, it is virtually impossible for a human to survey the inside of a 10-in.-diam pipe to validate it for free release, to remove a contaminated component from its perch 25 ft above a hot cell floor, or to remove abandoned materials from the bottom of a quarry overlain by 50 ft of water.

### 11.1.6 Disadvantages to Remote Operation

A major disadvantage of remote operation is the fact that the operator, located at a distance from the work being performed, cannot provide immediate response to the task or problems. Also, a worker needs rehearsals with mock-ups of the work area. In most cases, manual operation, no matter how complex, does not require training and rehearsals to prepare for the task. However, for manual operation in a hostile environment, prior training and rehearsals for the task are essential.

## 11.2 Technologies That Can Be Performed Remotely

Most of the technologies described in this handbook could be successfully converted for remote operation. The conversion activity must account for each system function performed by the manual operation and provide for a suitable operator interface at some remote location with visual and electronic feedback from the work location to that remote location. Other factors to be considered when preparing remote activities include tool setup and change-out, operating clearance for remote equipment, terrain conditions for mobile equipment, and material handling operations. In some cases, basic manual tools can be modified to benefit the remote system. For example, modification may include changing the grip to something an effector can grasp (Figure 11.1), using remote alignment and pinning methods (Figure 11.2), and using self-standing bails (Figure 11.2). Successful remote operation requires the operator to see the area in which the work is being performed and manipulate the equipment well enough to accomplish the required tasks.

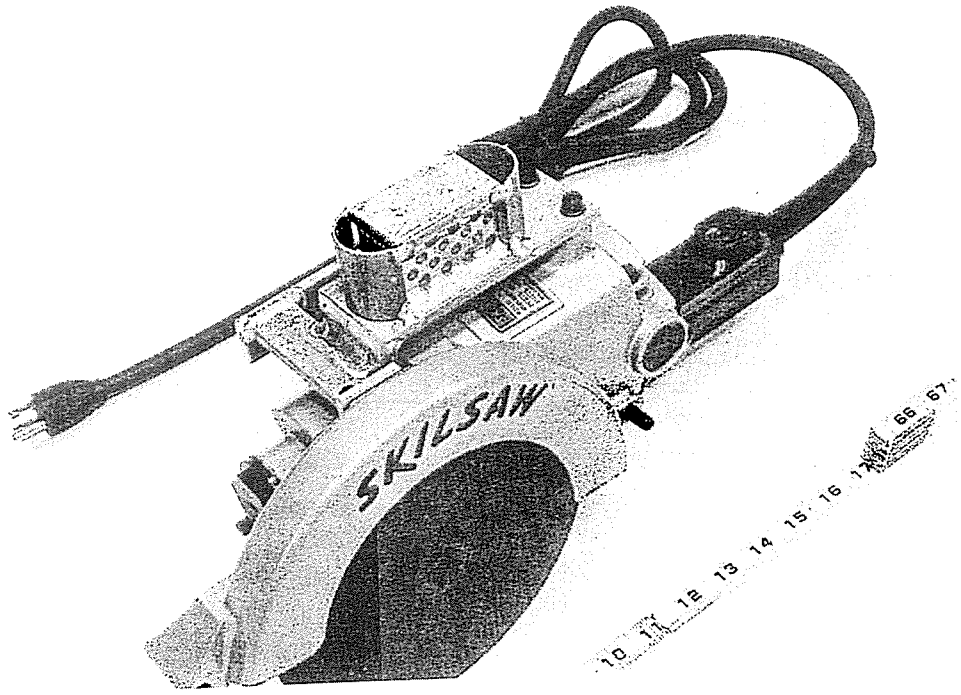


**Figure 11.1. Remote skill saw with modified grip (PNL 1992)**

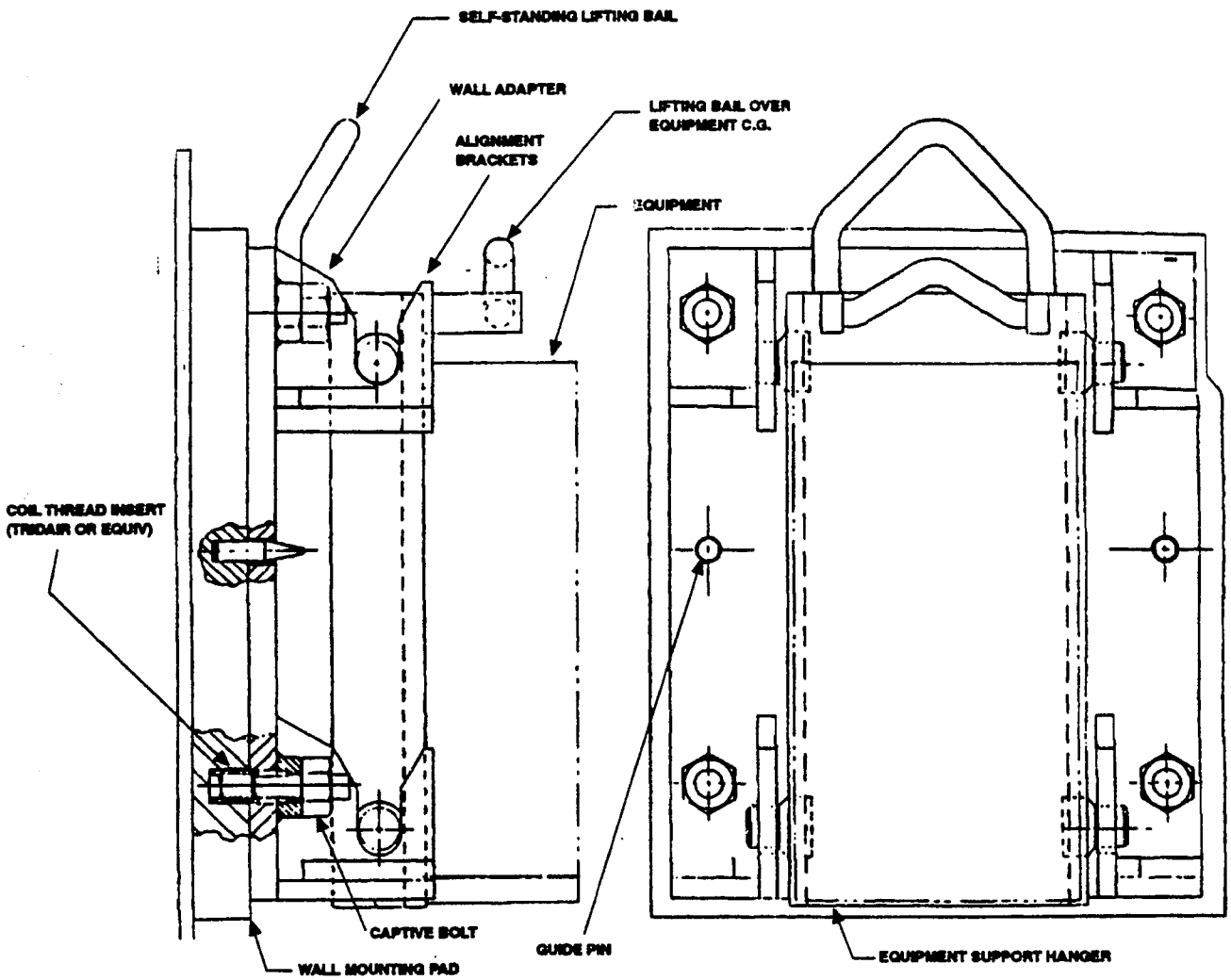


**Figure 11.2. Remote alignment and pinning method with self-standing lifting bail (NSA 1978)**

The following sections describe the six major categories of remotely operated equipment, including detection, segmenting, decontamination, materials handling, sampling, and handheld remote equipment.

### 11.2.1 Detection Equipment

Detection equipment, such as cameras or measuring equipment (see Chapter 7), can be used for surveys and data gathering activities or can be combined with other remote equipment for real-time operator monitoring. It is important to note that besides real-time monitoring, remote detection equipment can perform the important functions of gathering data for subsequent analysis, data that may not be readily gathered by human observation.

#### 11.2.1.1 Cameras and Lights

Most remote operations rely on real-time visual feedback to an operator. This information is the main link between the operator and the remote operation being performed. Use of cameras and lights are essential to the success of a remote operation. A typical camera and lighting system setup is shown in Figure 11.3. The figure shows a mobile robot with two cameras and lighting systems mounted on positioners that permit two degrees of freedom. Signals are transmitted to a receiver and visually displayed on large monitors for the operator's use.

With the use of a stereo camera system, data can be fed to stereo monitors, providing the operator with limited depth perception. A stereo camera system can also permit mapping of the panned areas or creation of a computer model that can be used in self-guided robots or virtual reality system displays.

For other remote operations, such as gathering visual data about stacked radioactive drums in a storage warehouse, a self-guided robot can be equipped with recording equipment as well as cameras and lights. In this situation, no real-time visual data are needed; so after the robot returns from its preprogrammed mission, the tapes are removed and examined in an "off-line" mode.

#### 11.2.1.2 Other Detectors

Other detection equipment may be required for specialized tasks (e.g., using a radiation detector to determine the most radioactive material in an area so it can be removed first and using an infrared detection system to monitor areas where heat-sensitive materials or equipment are required for decommissioning activities). Many of the techniques listed in Table 7.2 can be used in a remote application. These applications may include measuring alpha, beta, gamma, or neutron radiation; checking floors for volatile organics and mercury; using infrared cameras to detect heat; using microphones and radios to detect sound; or taking temperature and humidity measurements.

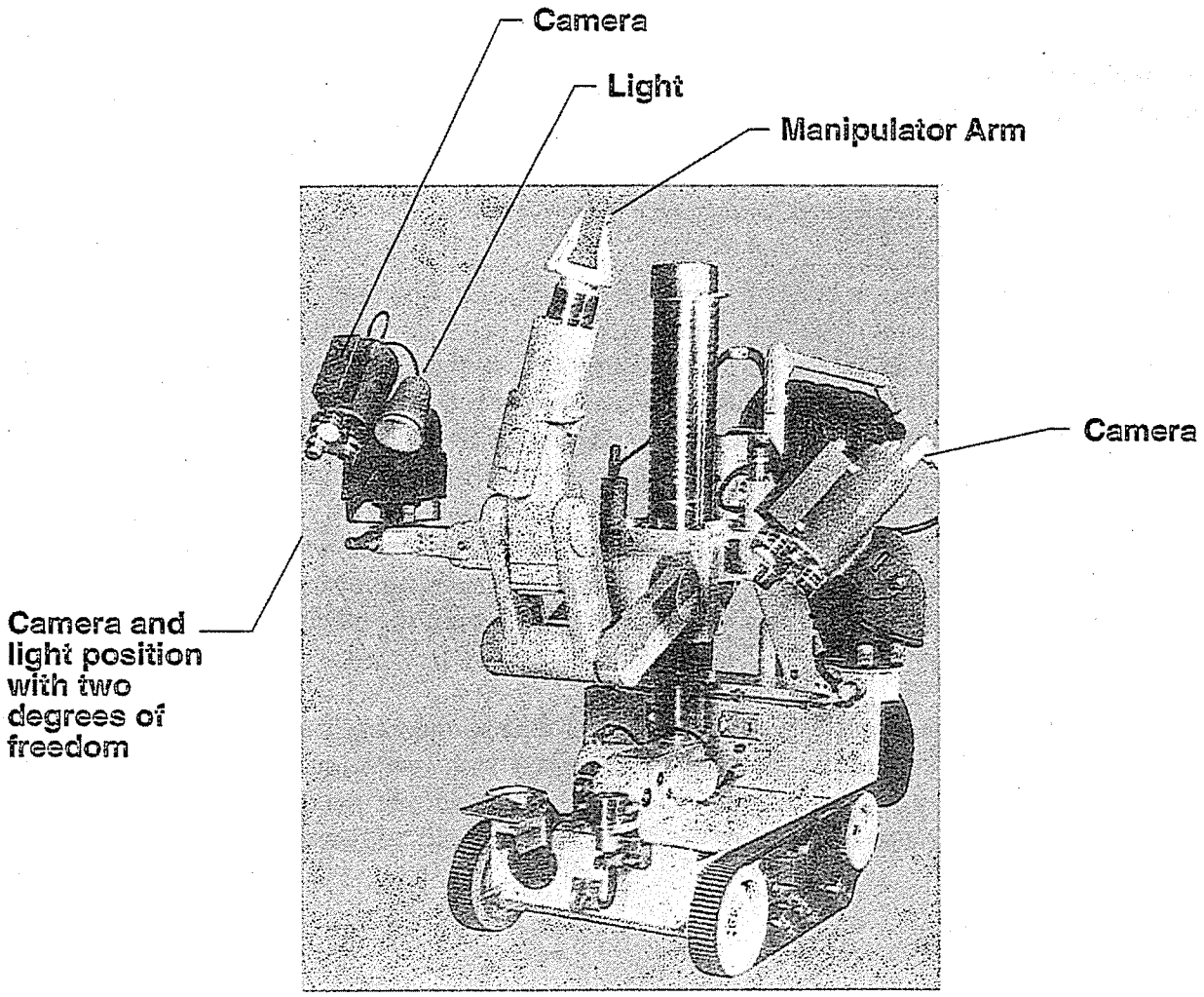


**Figure 11.3. Mobile robot with onboard cameras and lights**

### 11.2.2 Segmenting Equipment

Almost all of the segmenting equipment (i.e., cutting tools) described in Chapter 11 are applicable for remote use; and many have been converted for remote operations, including circular saws (Figure 11.1), nibblers, arc saws, plasma arc cutters, reciprocating saws (Figure 11.4), laser cutters, friction saws, grinders, and rotary hammers. Converting some equipment to remote application is easy. For example, plasma arc cutters already have remotely operated cutting heads, so extending these to hostile environments is simple. Other cutting tools are designed specifically for manual operation, so special fixtures, equipment, or custom-designed tools are required for remote operation.

Heavy equipment, which is usually used for materials handling, is now being converted for remote operation. Some remotely operated heavy equipment is exclusively used for segmenting. An example includes remotely operated backhoes with a ram implement attachment, which are used for breaking concrete.

Other remote equipment that falls into this category includes nut running tools and impact wrenches. These are standard tools that have long been used with remote systems and can be applied to decommissioning activities where applicable.

### 11.2.3 Decontamination Equipment

Some of the decontamination techniques described in Chapter 10 are suitable for remote operation, including processes such as scabbling, vacuuming, steam cleaning, and spraying. However, some techniques may be more difficult to adapt to remote use. For example, a remotely positioned, vacuum bell, in situ cleaning device can be used to apply electropolishing electrolyte or other surface cleaning chemicals, but the system may have to be coupled to a bridge-mounted, teleoperated manipulator if the task is to decontaminate cladding in a hot cell. Although the adaptation is made more difficult by situational complexities, it is still feasible. As required tasks become increasingly complex, functions to be combined become more numerous, inputs to the remote system increase, and remote operations become more difficult and sometimes impossible.

### 11.2.4 Materials Handling Equipment

Lifting, packaging, and removing materials generated in the decommissioning effort are some of the most important parts of the operation. Most facilities have an established materials handling system, and if it is still functional at the time of decommissioning, operating costs and potential procurement delays can be reduced. It will also minimize the frustration at the end of the project when it comes time to survey clean subcontractor equipment. Where facility-based materials handling equipment is not available or usable, equipment should be carefully selected to minimize recontamination of clean areas.

Mobile remotely operated units can move about a facility and perform decommissioning tasks where necessary and then transport the removed material to a staging area for further processing or packaging for disposal. These units do not have to be custom-designed, because a large number of mobile remote systems are now being built for use in hazardous environments.

Remotely operated equipment consists of five units: (1) the control station, which controls all movements and actions of the remote equipment; (2) the communication and power link, through which control signals and power are transferred to the remote equipment; (3) the supporting platform, from which the arm is mounted and all work is managed; (4) the arm of the remote equipment, which provides orientation and fine positioning of the tools; and (5) the operating tool at the end of the arm, which performs the actual work involved, such as cutting. These five units are described in the following sections.

### 11.3.1 Control Stations

The control station monitors and directs all actions associated with the remote equipment, including manipulating the operating tool. The control station is located in a nonhostile environment from which either radio or hard-wired signals are transmitted to the support platform, arm, and operating tool. In addition to the operating controls, the control station may provide displays of the work area provided by cameras and detectors mounted on the support platform. Some systems do not provide displays. For example, automated data gathering systems record optical data for off-line playback, and traditional hot cell manipulator galleries provide viewing windows as opposed to viewing screens.

#### 11.3.1.1 Teleoperator Control Stations

A teleoperator control station is where an operator makes real-time control decisions. These decisions may be directed towards manipulating or navigating the system. Very few of the operations are directed by automated support functions. Currently, two types of teleoperator control stations are most common: traditional control stations and advanced control stations. Virtual reality systems are quickly evolving in the research sector, however, and are expected to be useful for this kind of work.

The traditional control station was developed in the 1940s and 1950s at the time teleoperator manipulators were being developed. As illustrated in Figure 11.6, the system consists of two master-slave manipulators positioned in front of a viewing window. Operations are restricted by the reach of the manipulators and the field of view provided by the window.

Figures 11.7 and 11.8 illustrate advanced control stations. Operations are even more isolated than those in the traditional control station, because operators are seated in front of a control console. Feedback is received through monitors for visual display of computer-generated graphics for data display. Controls include power switches and joysticks for control of the operating tool. The

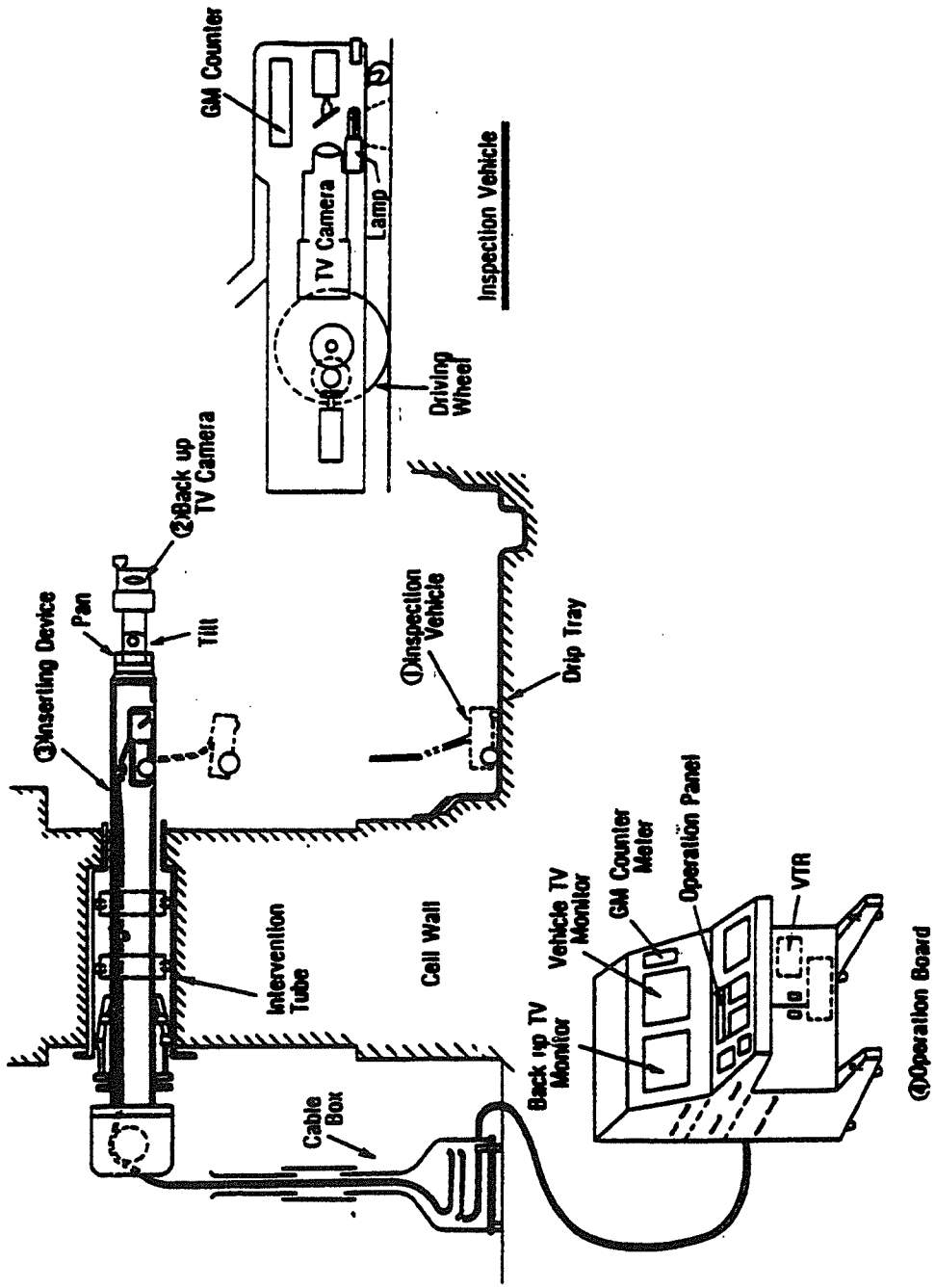


**Figure 11.7. Advanced control station for an inspection vehicle (Sasao 1987)**

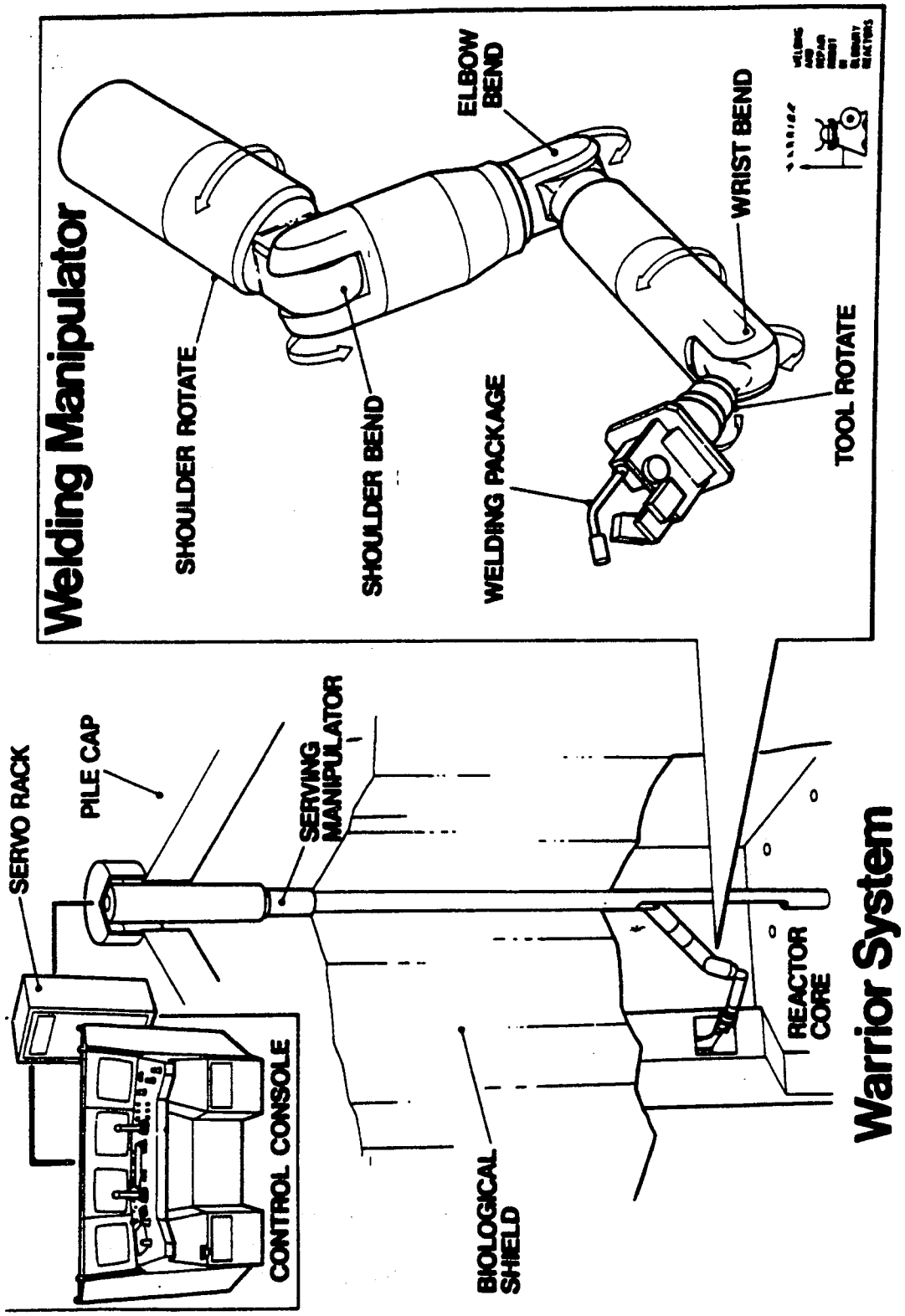


Figure 11.8. Advanced control station for the warrior system (Smith 1987)

operator makes operational decisions, but the computer may aid in controlling the remote operations. Operations are restricted by camera coverage, the length of cable, and the length of manipulator mast.

Figure 11.9 shows a multiple screen control station; and Figure 11.10 shows a monitor interface using a touch screen, on which the operator selects the functions by touching the appropriate icon (Spille 1993).

Virtual reality control stations currently provide information to the operator using computer animation (Figure 11.11). This technology is rapidly developing. Other researchers are using helmet-mounted optical displays to further enhance the virtual reality effect.

#### 11.3.1.2 Teleoperator Managed Stations

Teleoperator managed stations are very similar to advanced control stations, except that the computer controls most of the operations of the robot, and the operator monitors the progress and only intervenes at critical points to perform specialized tasks, to make navigational corrections, or to recover the system from unexpected encounters.

#### 11.3.1.3 Automated Stations

Automated control stations are used in situations where all functions are known quantities and unexpected or unanticipated interferences are very unlikely. All the functions are computer controlled, and operator adjustments require reprogramming. This type of system has limited application in decommissioning programs.

### 11.3.2 Communication and Power Links

Communication links may be of two types: radio controlled or hard-wired. For multiterrain robots, radio control makes sense, because hard-wired communication links limit the distance the robot can travel and may affect its overall performance, and unexpected field conditions may result in the robot becoming trapped by its own hard-wired umbilical.

When remote equipment travel a prescribed path only, hard-wire technology makes sense. These systems include cranes, hoists, bridge-mounted manipulators, and some inspection robots (Figure 11.7). Stationary systems like master-slave manipulators, wall- and pedestal-mounted electromechanical manipulators, and industrial robots are inherently hard wired. The hard wiring can be one of several different methods or even a combination of methods. These methods include bus bar, festoon, umbilical, and flat cable systems.

The only control system that does not require a communication link is the automated station. The automated station can have all control functions located onboard. However, if the environment in which the robot operates is sufficiently hazardous, it may be wise to locate the controller in a safe environment and to establish a communications link to the robot.

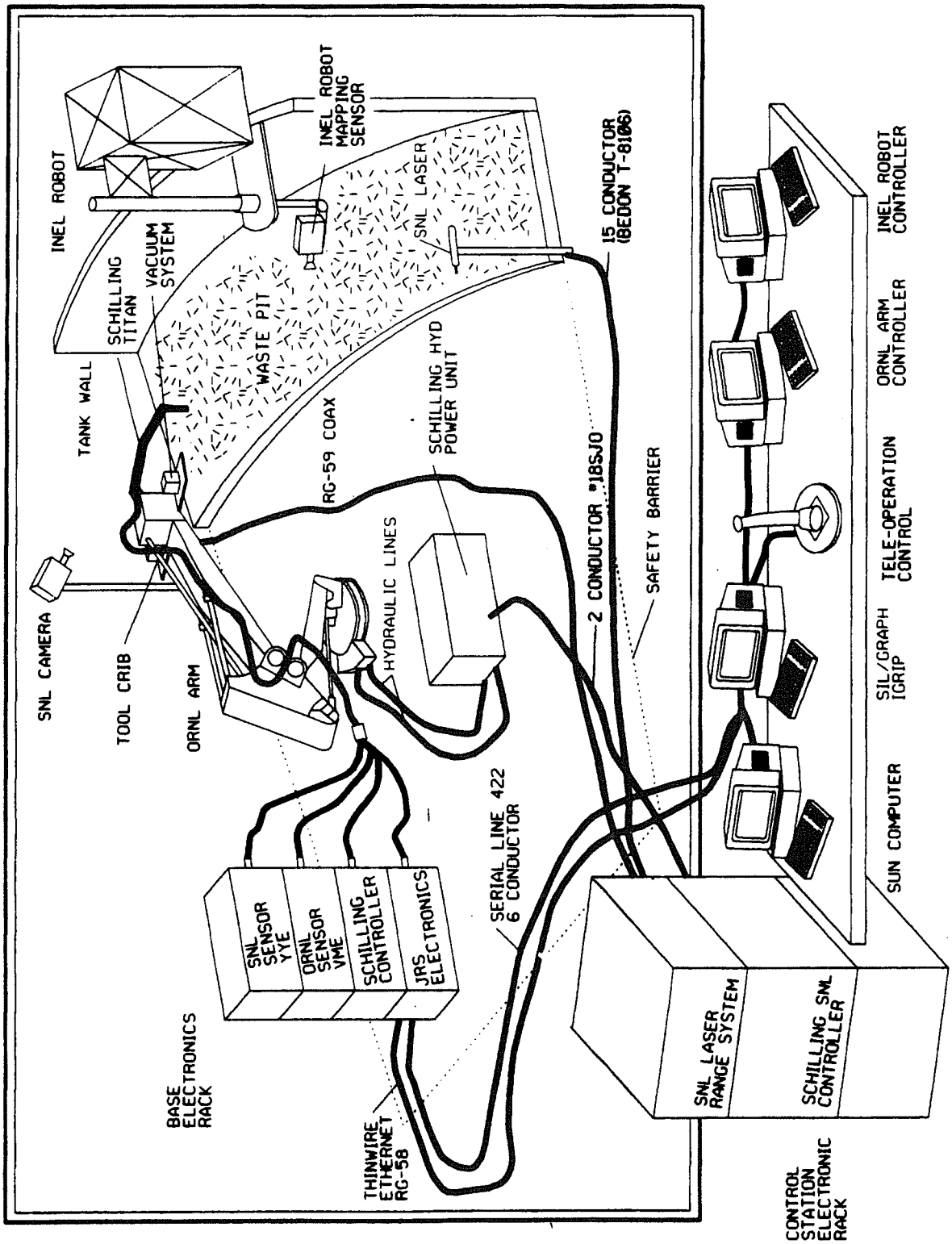


**Figure 11.9. Multiple display screen control station (Christensen 1993)**

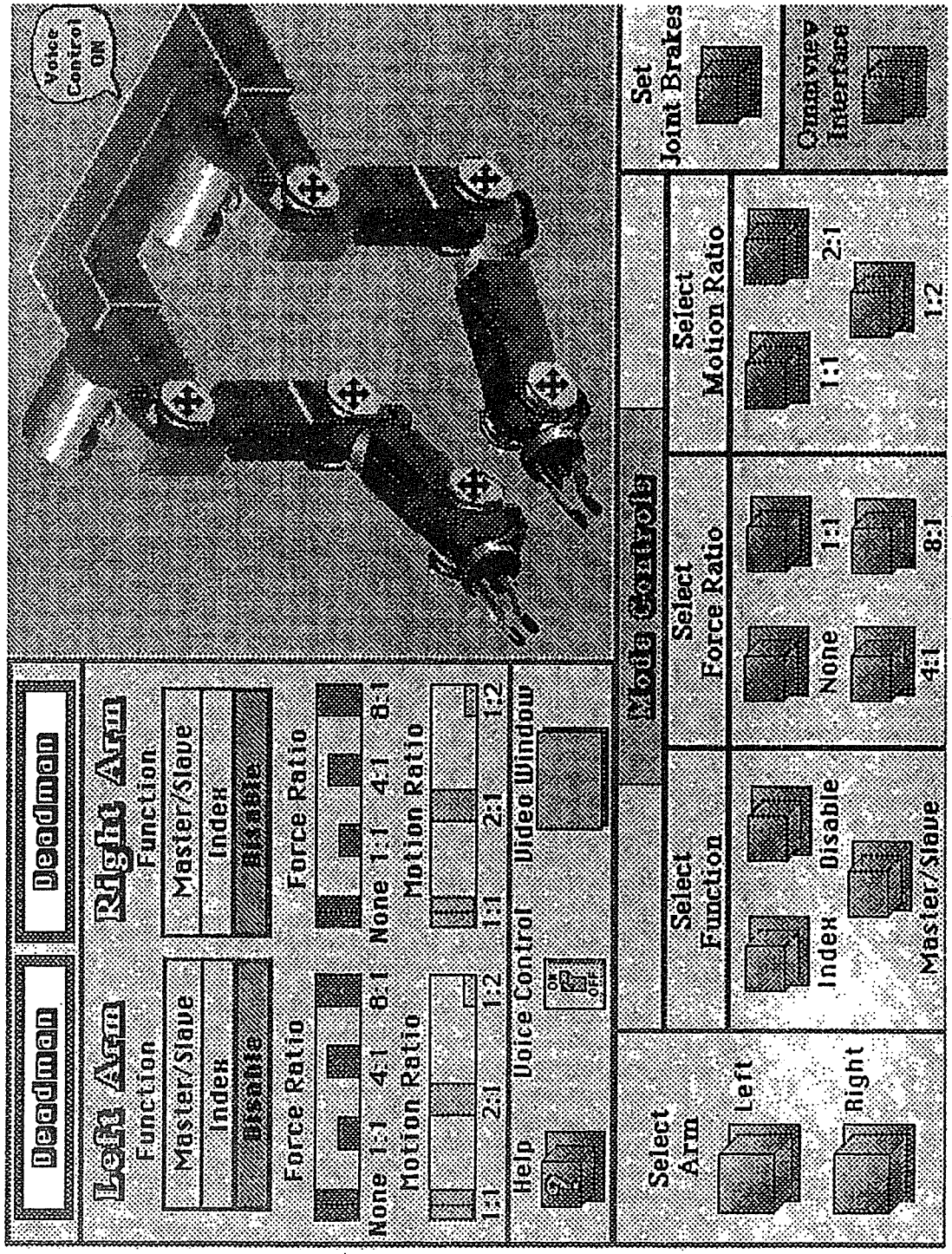


**Figure 11.10. Touch screen control monitor (Spille 1993)**

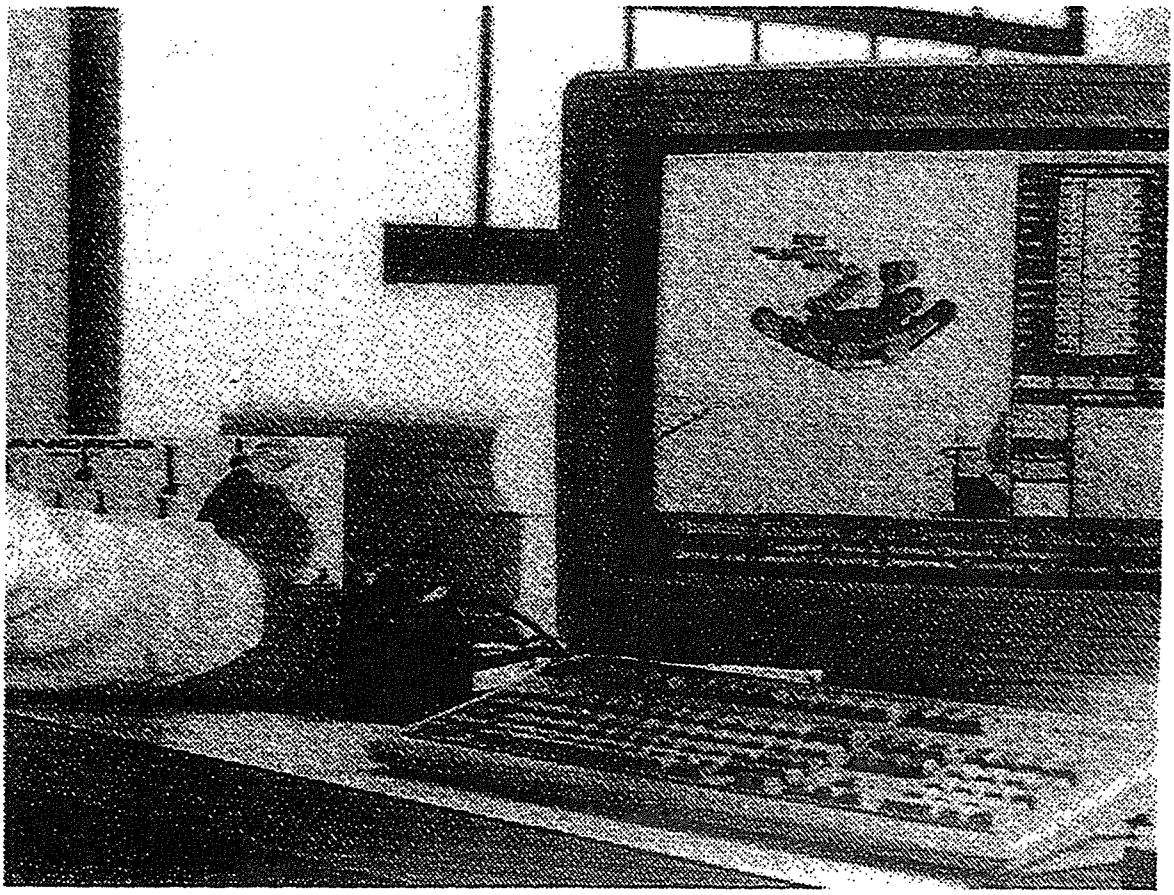

**Figure 11.11. Virtual reality model displayed on monitor (Trivedi 1993)**

Typically, radio control units use onboard batteries, engines, or fuel cells as a power source. Hard-wire controlled systems usually use a hard-wire technology to provide power to the remote.

### 11.3.3 Support Platforms

The support platform is the base from which all remote activities are carried out. The platform includes all auxiliaries and housekeeping equipment required to keep the remote operation functioning in a hazardous environment. Among the items required on the platform are the hardware (to transmit power from the source to the tool), monitoring devices (to control movements of the tool), and any onboard equipment for movement. There are two classes of support platform: stationary and mobile.

Stationary platforms cannot move and must be placed in position by other equipment. Examples of this kind of remote equipment are platforms for cutting up a single component, from small tanks (McGough 1989) to large reactor internals (NEA 1992). The platforms typically have the tools extending in only one direction from the platform, either completely above or completely below the platform.

Unlike the stationary platforms, most of the equipment installed on a mobile platform is dedicated to performing the navigation and movement of the platform. Under the direction of the operator, the mobile platform moves from the vicinity of the control station into the hostile environment to perform the decommissioning task.

### 11.3.4 Arms

The arms of a remote system provide positioning and orientation of the end effector or tool in relationship to the work. Three different classes of arms include existing equipment, robots, and specialty systems.

#### 11.3.4.1 Existing Equipment

Existing equipment sometimes include remotely operated cranes, master-slave manipulators, and electromechanical manipulators. They would only be used in facilities that have these available and in operational order. Given the selection of current robotic and mobile equipment, there is very little reason to install this type of fixed equipment for a decommissioning project.

#### 11.3.4.2 Robots

A robot can be defined as a reprogrammable, multifunctional manipulator designed to move materials, parts, tools, or specialized devices through variable programmed motions (Shahinpoor 1987). Emphasis is placed on the *reprogrammable* and *programmed* portions of the above definition. Those types of robots pertinent to decommissioning include the following:

- Automated or flexible manufacturing robots: These "industrial" robots are employed in a wide range of manufacturing processes, including parts assembly and inspection, materials handling, welding, and materials painting (Shahinpoor 1987). An example of the use of this type of robot was one K-25 Site project near Oak Ridge, Tennessee, which went completely through the planning phase but was not funded. The project was to have involved the removal, treatment, and disposition of approximately 5 mi of ductwork; and part of the planned pretreatment train included robotic cutting equipment along with industrial shears. Robotic stackers and shear feeders, which were not included in the original plan, could be added to completely automate the system.

- Remote exploration robots: This type of robot is designed to survive in environments that humans cannot tolerate (Shahinpoor 1987). An example involves the use of remote exploration robots to examine tank interiors, cooling tower basins, larger service piping, and sewers.

- Hazardous materials handling robots: Robots of this type have been employed to remove bombs and handle hazardous materials (Shahinpoor 1987). These robots are similar to the other two but usually incorporate a cargo hold in their configuration. The cargo hold may be armored or have a criticality safe geometry.

The geometrical configuration of robot arms usually falls into one of the following categories:

- cartesian (rectangular),
- cylindrical,
- spherical (polar),
- revolute (articulated), or
- tensor-arm (snakelike).

The cartesian geometry arm (Figure 11.12a) consists of three linear motions that correspond to the cartesian coordinate system designation: X, Y, and Z. This geometry can provide extremely accurate motions, provide easy joint motion controls, and possess good obstacle avoidance characteristics. These robot arms require large structural frameworks and a large floor space in which to operate. They are usually more mechanically complex than other systems because of the linear sliding motion of the joints.

The cylindrical geometry arm (Figure 11.12b) consists of two linear motions and a rotary-type motion. The two-linear-axis design makes the mechanical system less complex than in the

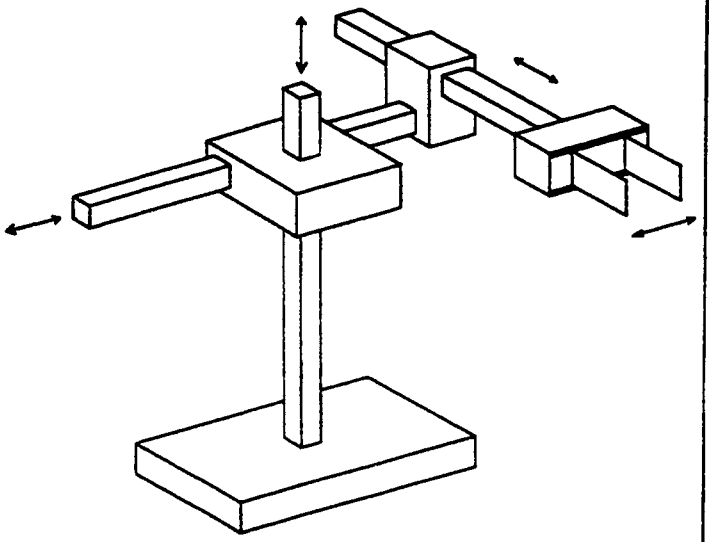

a.) Cartesian geometry

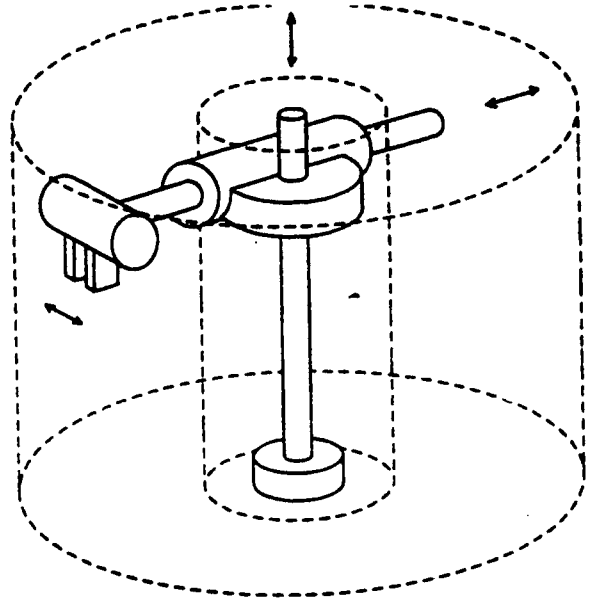

b.) Cylindrical geometry

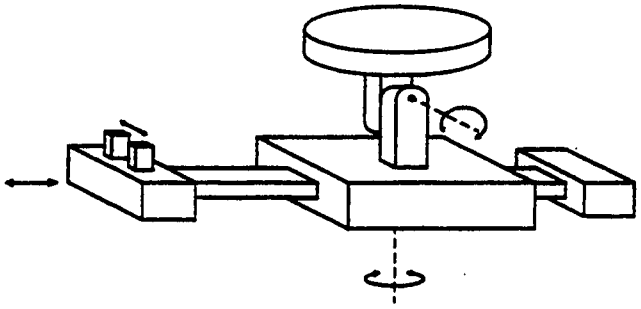

c.) Spherical geometry

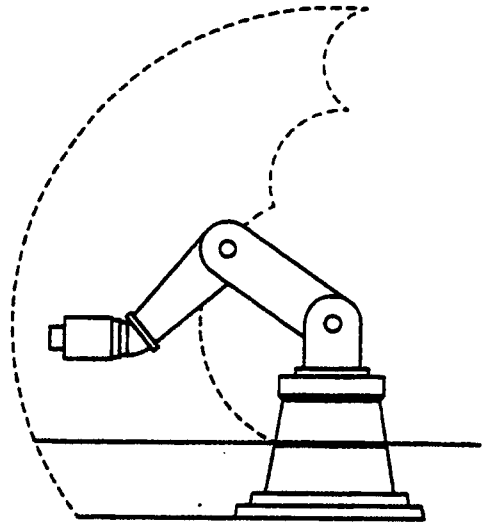

d.) Revolute geometry

**Figure 11.12. Geometry schematic diagrams for robotic arms (Shahinpoor 1987)**

cartesian geometry configuration. The arm has good joint motion control and collision-free movement. It is less accurate compared to the cartesian geometry yet requires a large support structure.

The spherical geometry arm (Figure 11.12c) consists of two rotary motions and a single sliding (telescopic) motion. This geometry provides the lightest weight construction and minimizes structural complexity. It also provides short joint travel for each motion. However, the system has limited ability to avoid collisions with workplace obstacles. Because of the two rotary motions, position errors can be comparatively large, and the arm can have counterbalance problems created by large and variable torques on the second and third joints.

The revolute geometry arm (Figure 11.12d) is a humanoid-type arm with redundant degrees of freedom. The arm has the flexibility to reach over or under workplace objects but has limited obstacle avoidance ability. It also usually has poor resolution and accuracy relative to positioning and can have counterbalance problems. This geometry has a high moment of inertia and is subject to gravity effects. Dynamic-instability can be a problem.

The tensor-arm (Figure 11.13) can take any shape in three-dimensional space. It is constructed from many subelements that can move with respect to their adjacent elements (Shahinpoor 1987).

#### 11.3.4.3 Specialty Systems

Remote specialty systems form a separate class of remote equipment. Typically, these systems are designed to perform one task, like removing fuel pin assemblies from the reactor core or closing a 50-ton shield door. Materials-handling specialty systems are usually amenable for use in a decommissioning effort. When these systems are available, their use should be considered in the overall decommissioning plan.

### 11.3.5 End Effectors and Tools

The objective of the remote operation is to perform some decommissioning task. This task is ultimately accomplished by the tool that is attached to the remote unit. As described in Section 11.2.2, almost any tool identified in this handbook can be incorporated into the remote unit. Specifically, all demolition tools and mechanical decontamination tools, most chemical decontamination tools, and some waste treatment techniques can be incorporated into the remote equipment.

In addition to the tools that have been previously described, manipulator systems can be designed with end effectors (grippers). Some systems allow these effectors to be "changed out" during the operation to provide flexibility of use in the system. Figures 11.14 and 11.15 show various end effectors and mechanical hands available.

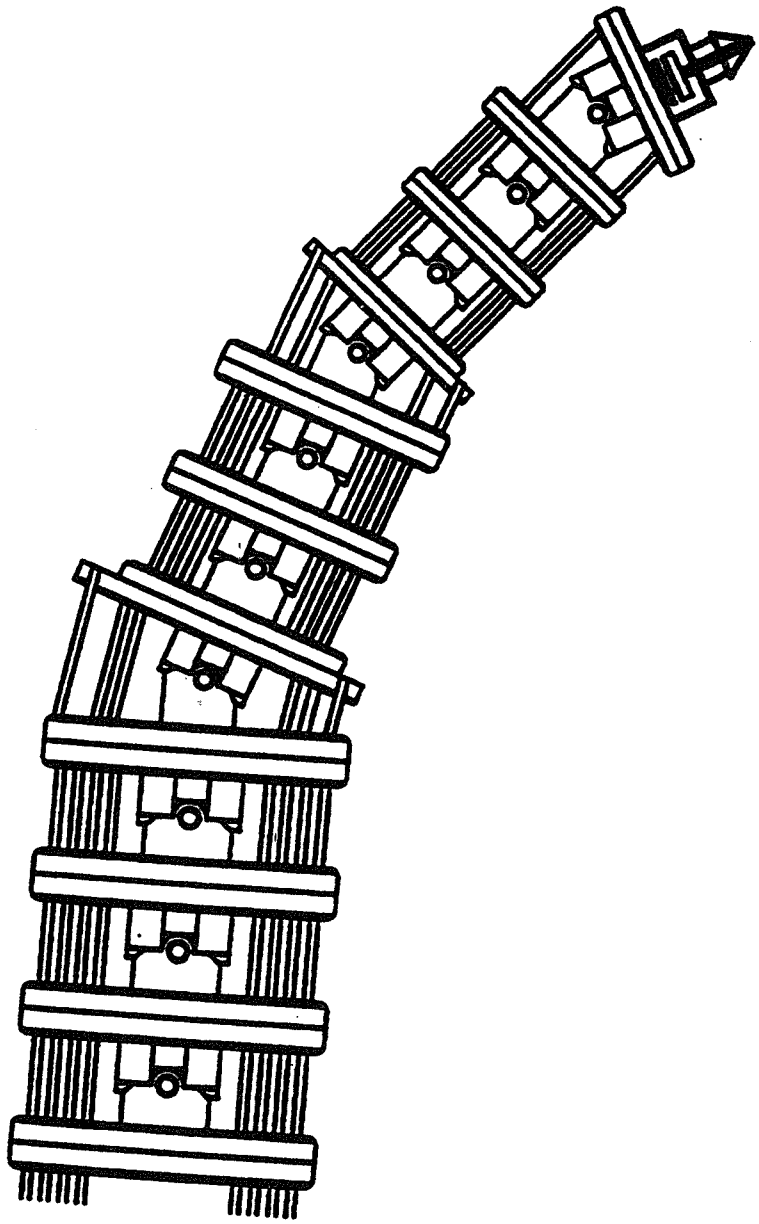

**Figure 11.13. Tensor-arm geometry schematic diagram (Shahinpoor 1987)**

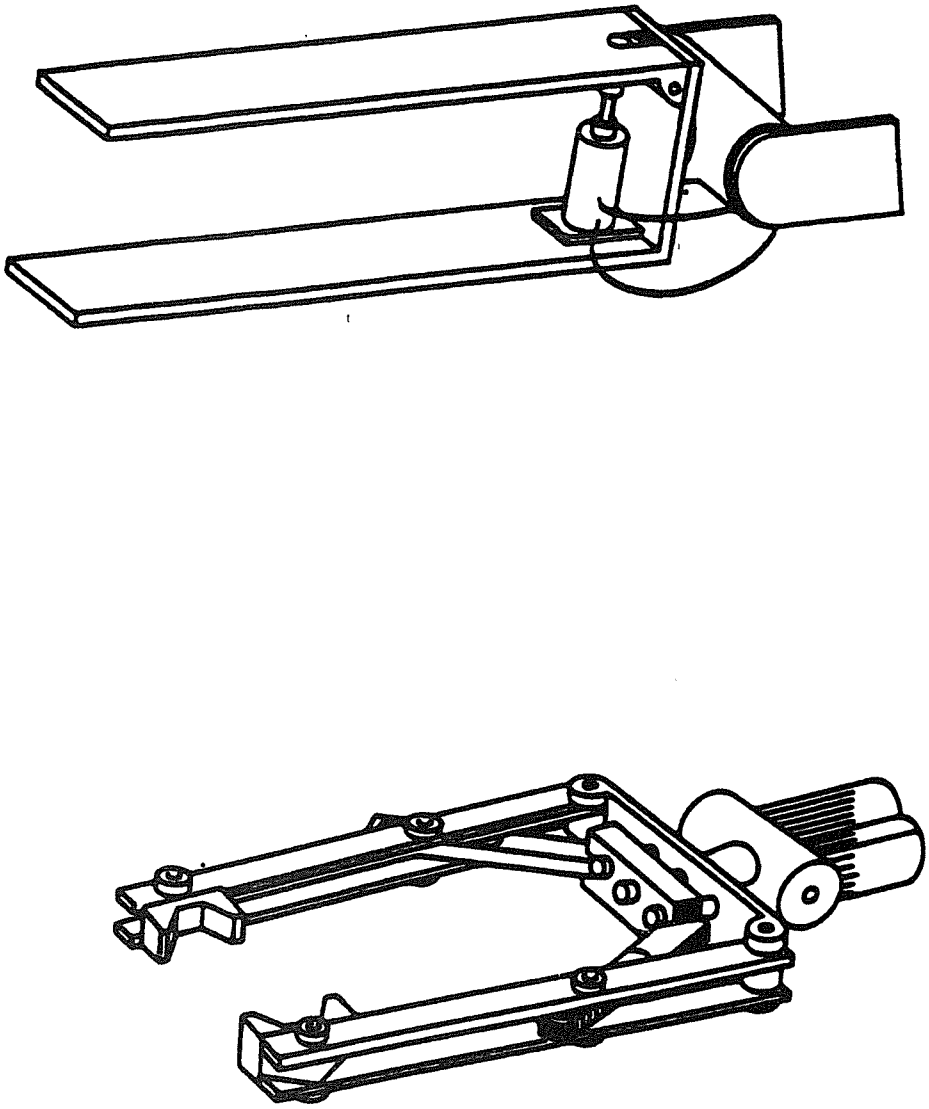

**Figure 11.14. Robot end effectors: single-jawed mechanical gripper (top); dual-jawed cam-operated gripper (bottom) (Shahinpoor 1987)**

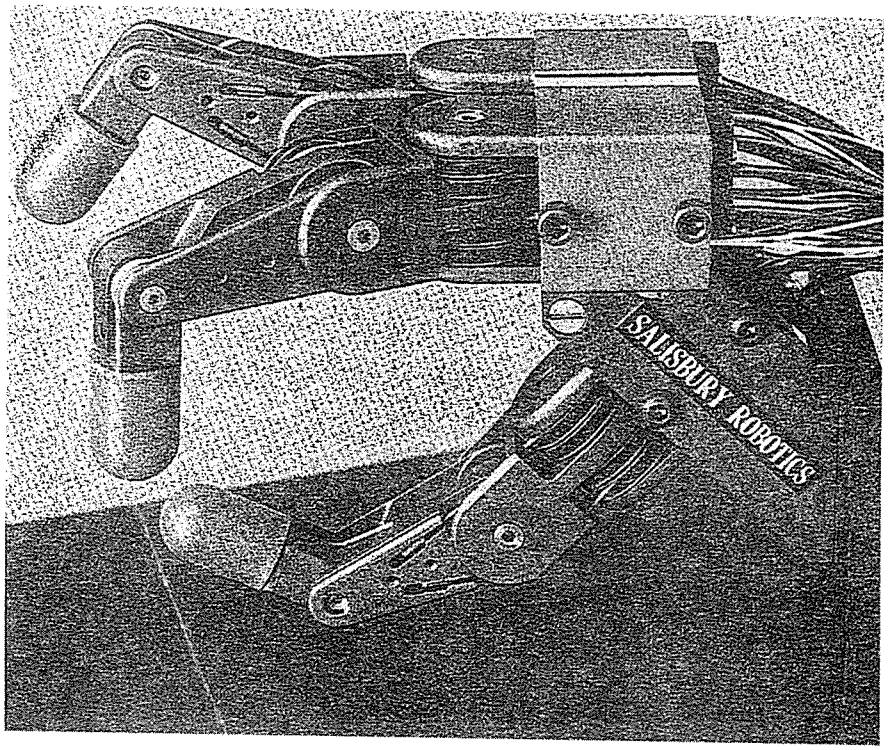


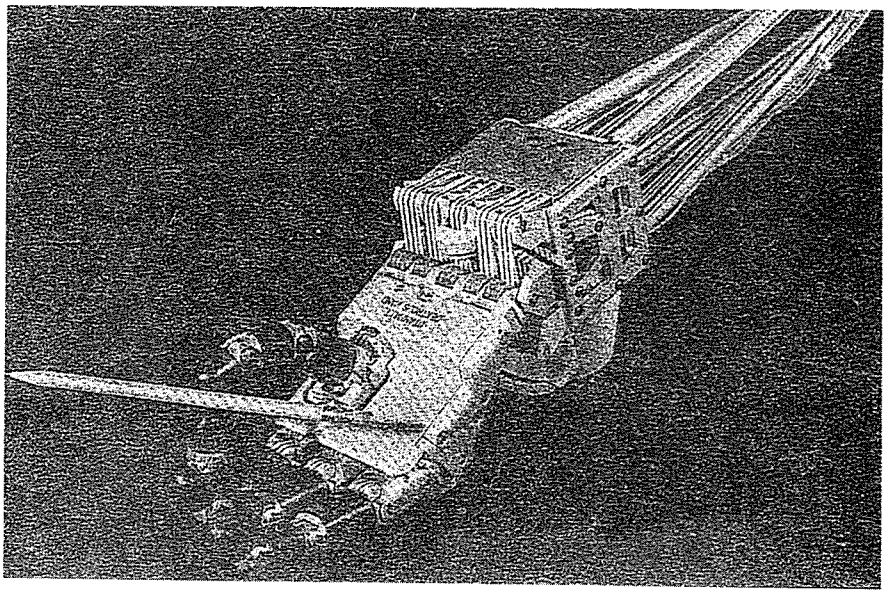

**Figure 11.15. Robotic hand-style end effectors (Shahinpoor 1987)**

## 11.4 Illustrative Experiences with Remote Applications

The following sections present examples of remote applications to past, present, or future decommissioning projects. The examples cover detection equipment, segmenting equipment, decontamination equipment, materials handling equipment, sampling equipment, handheld equipment, and miscellaneous equipment.

### 11.4.1 Detection Equipment

Five projects that use remote detection equipment under circumstances that prohibit human entry are described in the following paragraphs. These projects are at the Idaho National Engineering Laboratory (INEL), Savannah River Site (SRS), French nuclear program, Nine Mile Point Nuclear Station, and Shorham Nuclear Power Station.

#### 11.4.1.1 High-Level Waste Tank Farm Project, Idaho National Engineering Laboratory

The new high-level waste tank farm at INEL, which currently is under design, includes provisions for remote operations including robotic inspection of the tanks' interiors and exteriors. The primary method of inspection will be visual to detect slow seepage in the tanks. If seepage is detected during the visual inspection, additional inspections will be performed remotely using an ultrasonic transducer. Routine inspection of welds and surfaces is not planned, but inspection capability is a design requirement for the robotic system (Berger, et al. 1993).

#### 11.4.1.2 Remote Radioactive Waste Drum Inspection, Savannah River Site

SRS is committed to reducing potential personnel exposure to radiation in its ER programs. Currently, large numbers of drums containing dry radioactively contaminated waste are stored at various sites awaiting final processing. These drums must be inspected as part of routine site operations and in compliance with federal regulations. An autonomous mobile robot is being developed to perform remote surveillance and inspection of these drums. The robot will be self-guided through narrow storage aisles and will record the visual image of each viewable drum for subsequent off-line analysis and archiving (Heckendorn, et al. 1993).

#### 11.4.1.3 Robotic Devices for Pipe Inspection

Electricité de France has designed and developed remote devices that allow a televisual inspection of the insides of water and steam lines. One of the systems developed is a small tracked vehicle equipped with an onboard television camera, floodlights, and an umbilical data link and power system. The second system developed is a push-pull system that provides repair services to sections of the lines requiring maintenance (Copin 1987).

#### 11.4.1.4 Mobile Surveillance System

The Surveyor™ Mobile Surveillance System, a remotely operated vehicle, at Niagara Mohawk Power Corporation's Nine Mile Point Nuclear Power Station, measures radiation, temperature, and relative humidity. It also provides optical inspection capabilities and has been used successfully in evaluations (Silverman 1987).

#### 11.4.1.5 Shoreham Nuclear Power Station Termination Survey

The Shoreham Nuclear Power Station contains more than 8000 ft of embedded pipe ranging in diameter from 1 to 12 in. Some of the runs were in excess of 60 ft in length. The pipe was believed to meet the criteria for release for unrestricted use. A technique was developed to survey the lines in place to demonstrate compliance with the release criteria, rather than trying to cut the lines out of the concrete. Two fixtures were made, one for lines with inside diameters of 3 in. or more and a second for 1.5- and 2-in. lines. The larger fixture consisted of six GM "pancake" probes and a television camera mounted onto a carriage to facilitate in-line transport. The detector for the smaller probe was a thin-end window GM tube. The television inspection and radiation measurements were done separately for the smaller lines, because doing them simultaneously was found to cause delays. The detector packages were pulled into and out of the lines by cable, since both ends of each piece of embedded pipe were made accessible. For the longer pipes, the detector package was inserted once from each end to enable it to measure the full embedded length.

### 11.4.2 Segmenting Equipment

Four projects that have utilized segmenting equipment are presented in the following paragraphs: the PPA Decommissioning Project, the Pipe Crawler Development Project at the SRS, the Remote Decommissioning of Gunite Tanks at ORNL, and the Remote Abrasive Cutters at the PNL.

#### 11.4.2.1 Princeton-Pennsylvania Accelerator Decommissioning

This decommissioning project involved the removal of activated concrete from the shield building housing a 3-GeV proton synchrotron. Some of the concrete had to be removed in small pieces in the corners between the ceiling and the walls. To perform the task with handheld tools would pose additional hazards. A hydraulic hammer (Petrucelli 1987) was used effectively to remove this concrete. Figure 11.16 shows the hydraulic hammer in operation at this project (Bair and Snedaker 1990).

#### 11.4.2.2 Pipe Crawler Development for Duct Elbow Removal, Savannah River Site

At SRS, equipment is being developed to remove an elbow in a 36-in.-diam ventilation line. The equipment is designed to cut the line from the inside using a plasma arc torch system. Because the radiation level in the line precludes manual operations, the equipment has been designed for

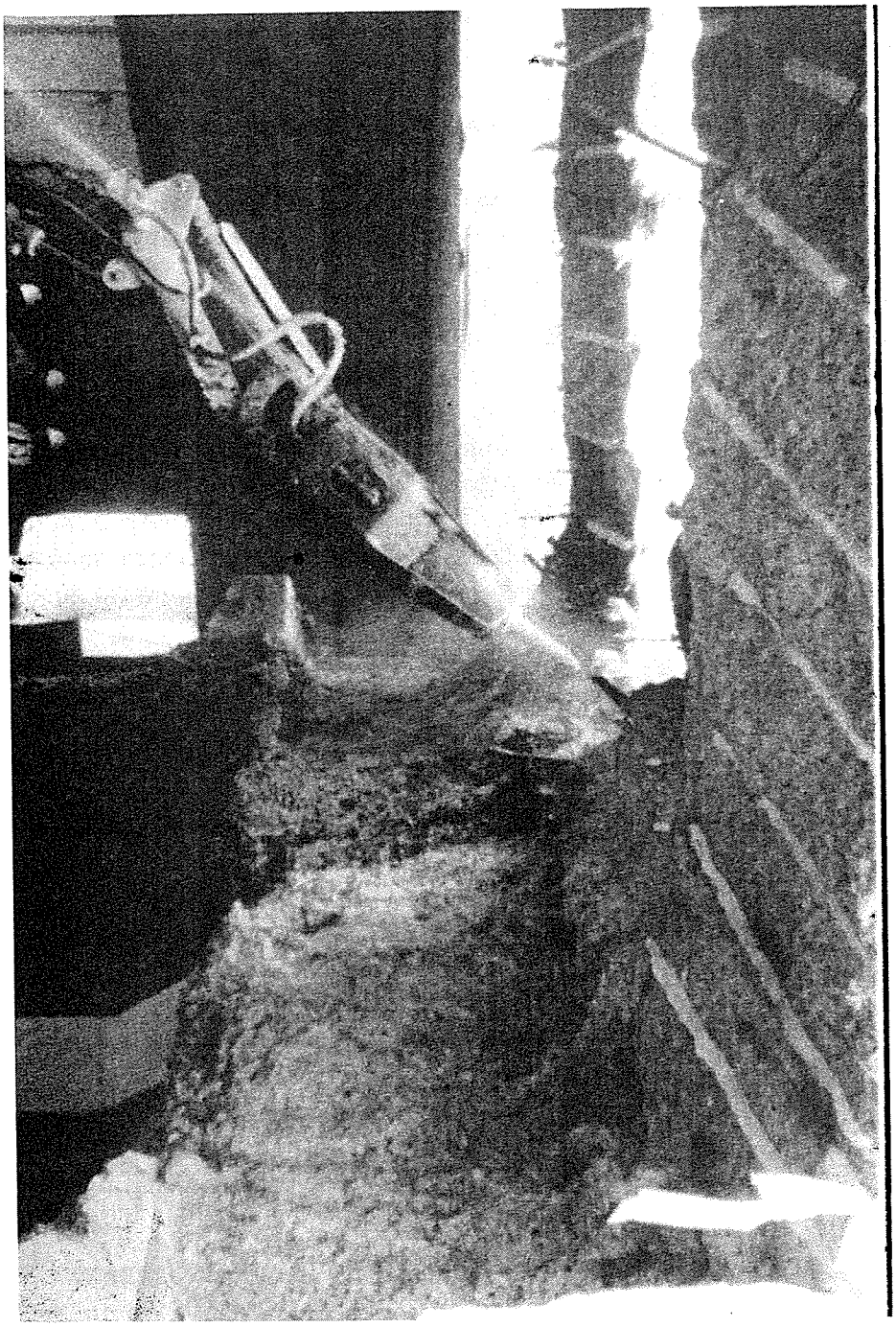

**Figure 11.16. Remote hydraulic hammer operation (Bair and Snedaker 1990)**

remote operation. To date, full-scale mock-ups have been tested successfully. The tests involved remotely maneuvering the equipment through a nonradioactive duct, making the two required cuts and backing out of the duct. The elbow successfully fell away from the main duct, showing that the line would be clear of obstructions (Zollinger and Treanor 1993).

#### 11.4.2.3 Remote Decommissioning of Gunite Tanks, Oak Ridge National Laboratory

Robotic systems and equipment are an option being considered to facilitate removal of the ORNL gunite waste tanks and their contents. The proposed robotic system would be housed in a portable containment structure. The structure would be cylindrical, have a domed head, and be sized to cover one tank. Inside the containment structure, a polar crane bridge equipped with a pair of trolley-mounted telescoping masts would be utilized to support and manipulate the systems and tools for performing the individual tasks. The bridge and mast control system and the manipulator control system would provide both teleoperated and robotic modes. It is anticipated that one mast would be fitted with an excavator bucket used to remove tank contents, and the other mast would be fitted with an ultra-high-pressure water jet to help remove tank contents and cut the tank structure (Chesser, et al. 1993).

#### 11.4.2.4 Remote Abrasive Cutters, Pacific Northwest Laboratories

At PNL, a lightweight (~23-lb) abrasive saw powered by a 7500-W hydraulic motor was adapted for remote operation. Tests were conducted in the PNL size-reduction facility by sectioning various plutonium-contaminated components with the saw mounted on the end of a master-slave manipulator. In this instance, the saw was guided by the manipulator, and adequate force was exerted to produce acceptable cuts. Control and maneuverability was somewhat limited by the hoses that connected the saw to the hydraulic power unit; however, this would not be a problem for a power manipulator or robotics application. It was found that blade wear, waste generation, and smoke problems can be minimized by operating at moderate cutting rates (~5 in./min) and by incorporating a water spray into the blade guard. It was also found that the saw could tolerate substantial misalignment and twisting during cutting without blade breakage.

### 11.4.3 Decontamination Equipment

Two projects that demonstrate decontamination equipment are discussed in the following paragraphs. These include the Hot Cell Decontamination at West Valley, New York, and the Decontamination of the Dissolved Loading Dell at the Tokai Reprocessing Plant.

#### 11.4.3.1 Hot Cell Decontamination, West Valley

The Chemical Process Cell is the largest shielded cell within the West Valley facility. This cell housed the tank, dissolvers, and piping where the chemical dissolution of spent fuel took place. Remote decontamination operations in the cell are carried out by operators working from four shielded viewing windows. Remote work has included the following:

- remote video, smear, and radiation surveys;
- removal and size reduction of all piping jumpers;
- removal of all vessels, racks, and cell coolers;
- sampling of floor debris;
- vacuuming of the cell floor;
- grinding of crane rails; and
- washdown of cell and equipment (Vandervort and Meigs 1987).

#### 11.4.3.2 Decontamination of the Dissolver Loading Cell, Tokai Reprocessing Plant

The Dissolver Loading Cell in the Tokai Reprocessing Plant was decontaminated using remote operations to provide lower radiation exposure conditions for workers who were constructing the upper part of a new dissolver. Dose rates from contamination in the cell exceeded 1000 rem/hr, even after all of the removable equipment was transferred to another cell. First, decontamination was remotely conducted using scrapers and scrub brushes controlled by the decontamination robot and master-slave manipulators. Electropolishing, ultrasonic, and chemical decontaminations were then used. These remote decontaminations occurred between March 1 and June 14, 1984 and required about 4400 person-days in three shifts. After the remote operations were complete, manual operations commenced using lead shielding to limit the 100–150 mrem/hr dose rate to personnel (Yamanouchi, et al. 1987).

### 11.4.4 Materials Handling Equipment

Three projects that demonstrate the use of remote materials handling equipment are discussed in the following paragraphs. These include a Versatile Remote Handling System at Los Alamos, the T-Rex Materials Handling System, and the Kerr Hollow Quarry Handling System.

#### 11.4.4.1 Versatile Remote Handling System, Los Alamos

A versatile remote handling system called *Monitor* was designed and fabricated for remote maintenance and inspection of the Los Alamos Meson Physics Facility external beam line. Monitor was constructed from relatively cheap commercial components and is a straightforward, trailer-mounted, remotely operated handling system. It is operated with a hard-wire link using television feedback and is intended to work in conjunction with a crane. Monitor reaches down into a pit; threads eyebolts into shielding blocks; and then attaches slings to the eyebolts, looping them over the crane hook. The crane then lifts the shielding blocks from the pit and places them alongside the pit opening, after which Monitor reaches across the pit and unhitches the slings from the crane. The crane is then used to move a shielded cask to the area, and Monitor places

the exposed target into the cask and installs a new target. The cask is removed, and the shielding block is then replaced with the help of Monitor (Horne and Ekberg 1975).

#### 11.4.4.2 T-Rex Materials Handling System

The *T-Rex* system, currently being developed, will perform multiple tasks during waste retrieval operations, including removing overburden from the top of waste containers, retrieving waste containers, removing asphalt storage pads, positioning a work platform (used by a forklift to unload shipping containers), loading waste containers on flatbed trailers, and erecting portable shroud panels. The majority of these tasks will require the operator to precisely position the end effector to within 2 in. of true vertical position at arm extensions up to 27 ft. Since this high degree of accuracy is required, the system must be substantially improved. The excavator will be equipped with five end effectors (a bottom dumping bucket; large forklift tines; small forklift tines with 12-in. sideshift tines; a drum handler and grab functions for 30-, 55-, and 83-gal drums; and a crane hook) and a quick-change system to allow rapid changeout (Kline 1993).

#### 11.4.4.3 Kerr Hollow Quarry Handling Systems

The Kerr Hollow Quarry is a 3-acre flooded limestone quarry located near the Y-12 facility on the Oak Ridge Reservation. Records indicate that more than 50 tons of hazardous and nonhazardous materials were disposed of in the quarry prior to 1988. In 1988, the Tennessee Department of Environment and Conservation (TDEC) issued a directive that the quarry be remediated. The quarry bottom was surveyed in 1989 using a small remotely operated vehicle (ROV). Based on that survey, it was estimated that some 3000–5000 items, including waste containers, were in the quarry. The remediation operation utilized a remotely controlled pontoon barge configured with a large grapple mounted in the center crossbar. The barge was remotely positioned over a pile of underwater debris, and the grapple retrieved the waste. The ROV was also used primarily to survey and retrieve smaller items. The items the barge and ROV retrieved were placed into a shredder, and the shredder debris was collected in a chip basket located on a trolley mounted directly under the shredder. When the chip basket was filled, it was brought to the surface and dumped into waste containers. The waste was then stored in a RCRA storage area located near the edge of the quarry (Walker 1993).

### 11.4.5 Sampling Equipment

At the containment structure *Sarcophagus* at the fourth unit of the Chernobyl (i.e., Chornobyl) Nuclear Power Station, pairs of robots are used to gather sampling data. The first robot, equipped with a video camera, observes the motion of the second, which carries the main equipment. The first robot remains stationary until the second robot travels a certain distance, at which time the observation robot proceeds further. The robots continue in this way to the intended destination, while they are continuously observed and controlled by an operator. The second robot drills boreholes and collects samples under concrete and rubble up to 600 mm deep. This robot is equipped with a special electromechanical system that includes a drill bit, bore extensions, a servo mechanism for rotational or impact drilling, a bore extension feed mechanism

with automatic drill pressure support, and a special plastic tube designed to accept and store core samples (Borovoi, et al. 1993).

### 11.4.6 Handheld Equipment

Chernobyl's *Sarcophagus* was completed in November 1986. An isolation and recovery program was commissioned a year later, and its emphasis was locating and characterizing the site's fuel. Boreholes were established to accommodate special inspection periscopes, photographic and video cameras, thermography equipment, and neutron and gamma detectors. These handheld systems are of primary importance to cleanup at the Chernobyl plant (Borovoi, et al. 1993).

### 11.4.7 Miscellaneous Equipment

The Shippingport Station Decommissioning Project provided access to the walls and superstructure of the Fuel Handling Building using a cherry-picker mounted on a bridge crane. The fuel handling canal occupied the main portion of the center of the building; and there was scarcely room to walk between the canal and the walls, so erecting scaffolding would have been difficult and time consuming. The fuel handling equipment was removed from the bridge and a cherry-picker installed. In this configuration, workers were able to reach the entire inner surface of the building for the full length of the canal. Although the system was not entirely remotely operated, it provided an example of the variety of applications possible. Remotely operated systems, whether entirely or partially remote, help equipment become more flexible for difficult tasks.

## 11.5 Conclusions

The remote technologies that can be used for decommissioning projects are identified in this chapter. This chapter also discusses how and why remote technologies should be considered in decommissioning activities, and it identifies the use of remote technologies in past, present, and future decommissioning projects.

## 11.6 References

Bair, W. A. and W. Snedaker, 1990. "Decontamination/Decommissioning of the Princeton-Pennsylvania Accelerator Facility." *Excellent and Economic Nuclear Plant Performance*, Newport, Rhode Island, September 16–19, 1990.

Berger, A., et al. 1993. "Robotic Systems for the High Level Waste Tank Farm Replacement Project at INEL." *Proceeding of the ANS Fifth Topical Meeting on Robotics and Remote Systems*. Vol. 1. Knoxville, Tennessee, April 25–30, 1993.

Borovoi, A., et al. 1993 "Use of Robotic Technologies and Remote Systems for Diagnostics and Research within the Chornobyl Sarcophagus." *Proceeding of the ANS Fifth Topical*

*Meeting on Robotics and Remote Systems.* Vol. 1. Knoxville, Tennessee, April 25–30, 1993.

Chesser, J., et al. 1993. "Robotic System for Decommissioning the Gunite Tanks at Oak Ridge National Laboratory, Oak Ridge, Tennessee." *Proceeding of the ANS Fifth Topical Meeting on Robotics and Remote Systems.* Vol. 1. Knoxville, Tennessee, April 25–30, 1993.

Christensen. 1993. "Graphic Model Based Control of Robotic Systems for Waste Remediation." *Proceeding of the ANS Fifth Topical Meeting on Robotics and Remote Systems.* Knoxville, Tennessee, April 25–30, 1993.

Copin, B. 1987. "Remote Handling and Robotics Devices for Inspecting Pipes In Power Plants." *ANS Proceedings: Remote Systems and Robotics in Hostile Environments, International Topical Meeting.* March 29 through April 2, 1987.

Glass. 1993. "Dose Reduction Using Manway-Mount Steam Generator Robot for Inspection and Repair." *Proceeding of the ANS Fifth Topical Meeting on Robotics and Remote Systems.* Knoxville, Tennessee, April 25–30, 1993.

Heckendorn, F., et al. 1993. "Remote Radioactive Waste Drum Inspection With An Autonomous Mobile Robot." *Proceeding of the ANS Fifth Topical Meeting on Robotics and Remote Systems.* Vol. 1. Knoxville, Tennessee, April 25–30, 1993.

Horne, R., and E. Ekberg. 1975. "Monitor—A Versatile Remote Handling System." *ANS Proceedings of the 23rd Conference on Remote Systems Technology.* 1975.

INEL (Idaho National Engineering Laboratory). January 14, 1988. R&D Development Photograph.

Kline. 1993. "T-Rex System for Operation in TRU, LLW, and Hazardous Zones." *Robotics and Remote Systems ANS Proceedings.* Vol. 1. Knoxville, Tennessee, April 25–30, 1993.

McGough. July 1989. "Electric Discharge and Metal Disintegration Machining Makes the Cut." *Welding Journal.*

NEA (Nuclear Energy Agency). 1992. *International Co-Operation on Decommissioning Achievements of the NEA Co-Operative Programme 1985–1990.*

NSA (Nuclear Systems Associates, Inc.). October 1978. *Remote Maintenance Standard Design Features Specification for the Fuels and Materials Examination Facility.* N78-013R5.

Pertucelli. 1987. "Brokk—Remote Controlled Demolition in Hostile Environments." *Remote Systems and Robotics in Hostile Environments*. Pasco, Washington, March 29 through April 2, 1987.

PNL (Pacific Northwest Laboratories). 1992. "PNL D&D Capabilities Unique in Depth and Breadth." Poster Session Handout. Third Technology Information Exchange, November 17 through 19, 1992.

Sasao. 1987. "The Development of In-Cell Remote Inspection System in the Tokai Reprocessing Plant." *ANS Proceedings: Remote Systems and Robotics in Hostile Environments International Topical Meeting*. Pasco, Washington, March 29 through April 2, 1987.

Shahinpoor, M. 1987. *A Robot Engineering Textbook*. Harper & Row, Publishers. New York.

Silverman, E., et al. 1987. "Surveyor™ Mobile Surveillance System For Hazardous Environments." *ANS Proceedings: Remote Systems and Robotics in Hostile Environments, International Topical Meeting*. March 29 through April 2, 1987.

Smith. 1987. "The 'Warrior' Welding Manipulator." *ANS Proceedings: Remote Systems and Robotics in Hostile Environments, International Topical Meeting*. Pasco, Washington, March 29 through April 2, 1987.

Spille. 1993. "Visual Programming Language (VPL) for Rapid Prototyping of Robotic Operations Interfaces." *Proceeding of the ANS Fifth Topical Meeting on Robotics and Remote Systems*. Knoxville, Tennessee, April 25 through 30, 1993.

Trivedi. 1993. "Developing Sensor-Based Robotic Systems Using Virtual Reality Concepts." *Proceeding of the ANS Fifth Topical Meeting on Robotics and Remote Systems*. Knoxville, Tennessee, April 25 through 30, 1993.

Vandervort, R., and R. Meigs. 1987. "Application of Remote Systems/Robotics for Decontamination at West Valley." *ANS Proceedings: Remote Systems and Robotics in Hostile Environments, International Topical Meeting*. March 29 through April 2, 1987.

Walker, K. 1993. "Kerr Hollow Quarry Remediation Project." *Proceeding of the ANS Fifth Topical Meeting on Robotics and Remote Systems*. Vol. 2. Knoxville, Tennessee, April 25 through 30, 1993.

Yamanouchi, T. et al. 1987. "Decontamination of the Dissolver Loading Cell (DLC) in Tokai Reprocessing Plant." *ANS Proceedings: Remote Systems and Robotics in Hostile Environments, International Topical Meeting*. March 29 through April 2, 1987.

Zollinger, W., and R. Treanor. 1993. "Pipe Crawler Development for Duct Elbow Removal." *Proceeding of the ANS Fifth Topical Meeting on Robotics and Remote Systems.* Vol. 2. Knoxville, Tennessee, April 25 through 30, 1993.

# 12.0 WORKER PROTECTION

This chapter gives an outline of the health and safety considerations that should be addressed when planning and conducting a decommissioning project. In addition, it highlights several unique health and safety challenges often encountered during decommissioning. However, it is not intended to provide a comprehensive manual for ensuring worker protection.

Worker protection is an important part of any project. Traditionally, some have regarded worker protection as an impediment to production operations. Currently, however, most recognize that worker protection goes hand-in-hand with the successful achievement of project end points for the following reasons.

- Worker protection helps avoid unnecessary suffering by workers and their families.
- Worker protection enhances productivity and reduces cost (the cost of caring for the injured worker as well as hiring and training a replacement).
- Worker protection keeps injury rates down, reducing the cost of worker's compensation insurance and enhances a contractor's position in the competitive bidding process.
- Worker protection is required by law.

Although decommissioning projects do not pose unique potential hazards to workers, these projects entail some areas of particular significance. Also, in decommissioning, some hazards may be concurrent in combinations not commonly encountered elsewhere (e.g., the removal of radiologically contaminated asbestos combined with working in an elevated workspace). This chapter provides an overview of the components needed for a worker safety program and specifies areas that should be given particular attention.

## 12.1 Requirements

Requirements for worker protection can be divided into three categories: protection from radiation, protection from toxic and hazardous materials, and protection from traditional industrial safety hazards. Requirements for radiation protection are defined in DOE Orders in NRC rules and regulations, and in the rules and regulations of individual states—and sometimes, municipalities. DOE Orders apply to projects involving DOE property or sites; NRC rules apply to NRC licensees; and state and local regulations apply to those persons licensed to use NORM or accelerator-produced radionuclides or byproduct licensees, if the state is an Agreement State. Requirements for protection from chemicals and industrial safety hazards are defined by OSHA and codified in 29 CFR 1910 and 29 CFR 1926. DOE Orders incorporate these requirements by reference and often reiterate or expand on the requirements.

This section provides a checklist of the federal requirements for worker protection. State and municipal rules are omitted because of their diversity from place to place and because of a general similarity to federal requirements. The reader is cautioned to research state and local requirements that might apply to his/her proposed decommissioning project.

### 12.1.1 DOE Worker Protection Requirements

The following DOE Orders identify requirements for worker protection:

5480.1B Environment, Safety and Health Program for Department of Energy Operations;

5480.4 Environmental Protection, Safety, and Health Protection Standards;

5480.8 Contractor Occupational Medical Program;

5480.9 Construction Safety and Health Program;

5480.10 Contractor Industrial Hygiene Program;

5480.11 Radiation Protection for Occupational Workers;

5480.17 Site Safety Representatives;

5482.1 Environment, Safety, and Health Appraisal Program;

5483.1 Occupational Safety and Health Program for DOE Contractor Employees at Government-Owned Contractor-Operated Facilities; and

5484.1 Environmental Protection, Safety, and Health Protection Information Reporting Requirements.

### 12.1.2 NRC Worker Protection Requirements

The following NRC rules specify requirements for the radiation protection of workers:

10 CFR 19 notices, instructions and reports to workers/inspection and investigations and

10 CFR 20 standards for protection against radiation.

### 12.1.3 OSHA Worker Protection Requirements

Sections from both 29 CFR 1910 and 29 CFR 1926 of the OSHA rules and regulations specify requirements for worker protection that are applicable to decommissioning projects. Neither part is complete in its application to decommissioning; therefore, it is necessary to review both and

adopt a practice that complies with the regulation that most closely applies to the situation at hand. For example, 29 CFR 1910 is the only regulation to specify requirements for hazardous waste operations, and the working surfaces associated with decontamination or waste treatment facilities that have to be operated on the decommissioning site may be more properly regulated under 29 CFR 1910. In contrast, sections of 29 CFR 1926 that deal with openings in floors and walls very clearly apply to decommissioning projects, and there is no comparable section in 29 CFR 1910.

Key sections from OSHA regulations that apply to decommissioning are:

| | |
|---|---|
| 1910.21 to 32 | Walking-Working Surfaces; |
| 1910.66 to 70 | Powered Platforms, Manlifts, and Vehicle-Mounted Work Platforms; |
| 1910.94 to 100 | Occupational Health and Environmental Control; |
| 1910.101 to 120 | Hazardous Materials, especially 29 CFR 1910.120, Hazardous Waste Operations and Emergency Response; |
| 1910.132 to 140 | Personal Protective Equipment, especially 29 CFR 1910.134, Respiratory Protection |
| 1910.141 to 150 | General Environmental Controls, especially 29 CFR 1910.147, The Control of Hazardous Energy (lockout/tagout); |
| 1910.151 & 153 | Medical and First Aid; |
| 1910.155 to 165 | Fire Protection; |
| 1910.169 to 171 | Compressed Gas and Compressed Air Equipment; |
| 1910.176 to 190 | Materials Handling and Storage; |
| 1910.241 to 247 | Hand and Portable Powered Tools and Other Hand-Held Equipment; |
| 1910.251 to 257 | Welding, Cutting and Brazing; |
| 1910.301 to 399 | Electrical; |
| 1910.1000 | Air Contaminants; |
| 1910.1001 | Asbestos; |
| 1910.1200 | Hazard Communication; |

| | |
|---|---|
| 1926.20 to 32 | General Safety and Health Provisions; |
| 1926.50 to 59 | Occupational Health and Environmental Controls; |
| 1926.100 to 107 | Personal Protective and Life Saving Equipment; |
| 1926.150 to 155 | Fire Protection and Prevention; |
| 1926.200 to 203 | Signs, Signals and Barricades; |
| 1926.250 to 252 | Materials Handling, Storage, Use, and Disposal; |
| 1926.300 to 305 | Tools—Hand and Power; |
| 1926.350 to 354 | Welding and Cutting; |
| 1926.400 to 499 | Electrical; |
| 1926.451 and 452 | Scaffolding; |
| 1926.500 to 502 | Floor and Wall Openings; |
| 1926.550 to 556 | Cranes, Derricks, Hoists, Elevators, and Conveyors; |
| 1926.600 to 606 | Motor Vehicles, Mechanized Equipment, and Marine Operations; |
| 1926.650 to 652 | Excavations; |
| 1926.850 to 860 | Demolition; |
| 1926.900 to 914 | Blasting and Use of Explosives; and |
| 1926.1050 to 1060 | Stairways and Ladders. |

Note that not all of the OSHA sections are identified here. Therefore, the reader should not assume that the key sections referenced here are the only ones that apply.

## 12.2 Overview

Three general categories of hazards are likely to be encountered by the worker during a decommissioning project—physical, chemical, and radiological. Physical hazards include those traditionally associated with industrial safety (e.g., areas conducive to falls, falling objects, electrical shock, noise, and heat and cold). Chemical hazards include exposure to toxic chemicals (e.g., PCBs and asbestos) and hazardous materials (e.g., organic solvents and lead). Radiological

hazards can stem from a multitude of different radionuclides but generally result from direct exposure to radiation or exposure to radiological contamination.

Four kinds of worker protection challenges are unique to decommissioning: (1) an incomplete knowledge of the facility, (2) facility configuration changes during demolition that affect structural stability, (3) the nonroutine nature of the work, and (4) unusual combinations of hazards.

Complete knowledge of the facility to be decommissioned may not be available, most likely if the operational history of the facility is long or if a great deal of time has passed between operation and the start of decommissioning. Over lengthy periods, records tend to become lost or difficult to retrieve, and knowledgeable people forget important details or cannot be reached. In the worst case, a decommissioning project has to be performed based solely on information gained during site characterization.

When a facility is originally constructed, allowable loading and stresses are calculated to ensure that the structure and process equipment are stable against collapse. Changes to this original configuration (e.g., demolition of process equipment or additions or deletions to the structure itself) can significantly affect the facility's structural stability. These effects and the associated safety hazards usually are not measurable, but they can be controlled using the same careful consideration in altering facility configuration as was afforded its construction.

Another element of facility configuration is the utility system, including ventilation, air monitoring, fire protection, electrical supply, and compressed air. Because it is often desirable to use these systems during decommissioning, special attention must be paid to their configuration to protect worker safety. For electrical systems, lines should be tested if as-built drawings are not available so that live wires are not encountered during decommissioning activities.

The third worker protection challenge unique to decommissioning is nonroutine activity. Trending studies have shown that industrial accidents occur most frequently during nonroutine activities, and unfamiliar conditions occur continuously during decommissioning. No day is exactly like the previous one. For example, a piece of equipment may not be available and a substitute may be used, different access may be required, new lines may need to be cut, or a staircase may have been removed. Therefore, it is necessary during decommissioning to have a higher level of safety awareness than for most other activities.

Decommissioning also brings together combinations of hazards not commonly encountered elsewhere. For example, the closest comparable industry in terms of hazards is construction because it, like decommissioning, involves heavy equipment, rigging, elevated work, and structural considerations. However, nearly all construction is done with materials that are free of chemical and radiological contaminants. Combining the hazards of deconstruction with those of radioactive materials requires new measures, both for worker protection and to prevent the spread of contamination. One conflict that develops out of this combination arises when hard

hats are required in a contaminated area. The overhead hazard demands the head protection, but the radiation worker regards it as a mechanism for the spread of contamination.

A second example of uncommon combinations of hazards is the need for coveralls, sometimes multiple sets, for protection from contamination, which causes a risk to the worker from heat stress. Similarly, asbestos removal contractors seldom work on radiologically contaminated systems, and combining these hazards requires combining two completely independent sets of regulation compliance. Finally, radiation workers are generally unfamiliar with the parallel requirements for monitoring and testing for chemical co-contaminants, and chemical workers are equally unfamiliar with radiological safety considerations; yet decommissioning frequently brings these hazards together so that protective measures need to be adequate for protection from both.

## 12.3 Health and Safety Program

The first step in worker protection is to develop a health and safety plan, which defines the safety steps to be taken on the worker's behalf prior to the beginning of the project. A health and safety plan ensures that necessary careful thought has taken place before the project is begun, so that needed supporting facilities, equipment, and services are identified and procured in a timely fashion. A written plan also provides a basis for uniform practice for both the worker and the safety professional.

Some key elements of a health and safety program include the following:

- management commitment to safety,
- provision for qualified safety professionals/technicians,
- availability of medical services/first aid,
- medical qualification of personnel,
- arrangements for off-site emergency response,
- safety work permit program,
- program for worker motivation,
- training,
- pre-job briefing,
- provision for necessary equipment,
- safety review of work planning and procedures,

- personnel exposure monitoring,
- work area assessment and monitoring (measurements),
- inspections,
- near-miss reporting,
- accident/injury reporting, and
- reviews of safety performance.

## 12.4 Review of Planned Work

An important part of successful and safe work is developing work procedures. Work procedures developed before the project begins are an important consideration in worker protection, because the exposure to radiation and other hazards is always less likely if the work is done right the first time. Safety professionals should review the work procedures and communicate with operations professionals to support worker motivation and to identify and correct safety problems before the project begins.

Some elements that should be considered when reviewing work procedures to ensure safety follow:

- lifting/rigging;
- material handling;
- cutting (fluid filled pipes, electrical lines, and pressurized lines);
- flame cutting (fire protection, smoke, and fumes);
- compressed gases;
- structural effects during deconstruction;
- heavier than air gases;
- noise;
- heavy equipment;
- portable equipment;

- auxiliary power;
- liquid use/containment; and
- generation of projectiles.

## 12.5 Work Area Assessment

As listed in Section 12.3, the health and safety plan should assess work area conditions. This is an important consideration, because it may impact review of work procedures and other safety provisions. The first step is to identify the area and any physical characteristics, some of which include the following:

- confined space,
- elevated work,
- heat,
- cold,
- noise, and
- overhead work.

Besides physical conditions, radiological conditions in the work area should be assessed, including the whole body dose rates, the significance of the skin and extremity dose rates, and the amount and type of contamination in the area. For example, contamination that is removable has the potential for airborne radioactivity, and an assessment of the potential for exposure by inhalation will sometimes be required. Even when removable contamination is insignificant, fixed contamination could be an inhalation consideration, if the planned work disturbs the surface (e.g., flame cutting or grinding). Techniques for assessing the radiological conditions in the work area include the following:

- dose rate surveys (neutron, beta, and gamma),
- contamination surveys (alpha and beta, smearable and total), and
- air samples (alpha and beta particulates and tritium).

The effect of any hazardous or toxic chemical on work area conditions should also be assessed. The usual mechanisms for exposure to chemicals are inhalation and contact with the skin, and chemicals may also pose the threat of fire or explosion. In decommissioning an abandoned facility, bulk chemicals may be present that are not identified, in which case the planned work

should be suspended until the chemicals can be characterized. Ordinarily, such chemicals should be identified during the initial site characterization, but some could be missed (see Section 7.2.1). As in the case of radiological protection, chemicals present may not be a hazard or identifiable in the air during characterization, but during cutting, vapors or fumes may be produced or new chemical compounds created that cause a significant risk. Some conditions that should be considered in assessing potential chemical hazards in a work area include the following:

- oxygen deficiency,
- explosive or ignitable vapors,
- friable asbestos,
- hazardous or toxic organic vapors, and
- mercury vapors.

Finally, safety professionals must assess bacteriological hazards in the work area. Again, the majority of potential bacteriological hazards should be discovered during characterization and corrected with the workers suitably protected. However, animal bodies, excrement, and stagnant water signal possible bacteriological hazards; and, if any of these are present, they should be removed or avoided and corrected later.

## 12.6 Work Area Controls

Following is a list of steps suggested to improve the work area once the work procedures are defined and the work area conditions are assessed:

- lockout/tagout;
- voltage checking;
- provide ventilation;
- fix contamination;
- provide containment (including drip containment, glove bags, tent containment, and room containments);
- decontamination;
- flush adjacent systems (to reduce dose rates);
- provide local shielding;

- provide lighting;
- provide signs and barricades;
- provide ladders and/or work platforms;
- provide protective structures;
- provide shoring; and
- housekeeping.

## 12.7 Personnel Protection and Monitoring

Because of the dynamic nature of decommissioning and the forced absence of stringent engineering control, there may still be a need for personnel protection after the work area is improved as described in Section 12.6. This protection most often takes the form of PPE, which is designed to provide protection from several kinds of exposure and from several kinds of material. The kinds of exposure include inhalation, contact with the skin, trauma, heat, and cold. Following is a list of some of the kinds of PPE that should be considered for personal protection during decommissioning:

- inhalation
  - air-purifying respirators,
  - powered-air purifiers,
  - air-supplied respirators,
  - hoods, and
  - self-contained breathing apparatus;
- skin contact
  - lab coat,
  - coveralls (paper, cloth, and plastic coated),
  - gloves,
  - shoe covers and/or boots, and
  - hoods;
- trauma
  - safety belts and/or lanyards,
  - safety glasses,
  - steel-toed shoes and/or metatarsal guards,
  - hard hats,

  - work gloves, and
  - ear protection; and

- heat and cold
  - ice vests,
  - air-cooled suits,
  - insulated coveralls or coats,
  - rest periods, and
  - replacement of body fluids.

The worker's exposure to potentially hazardous work area conditions is monitored to assess the adequacy of the engineering measures taken to enhance the work area, as well as the appropriateness of the PPE used. Monitoring also provides a means for reassuring the worker and demonstrating compliance with applicable regulations. Most personnel monitoring can be divided into three types, including monitoring air in the breathing zone, measuring exposure to radiation from sources external to the body, and measuring contaminants in the body or body fluids.

Air monitoring includes both real-time monitoring and sampling with subsequent analysis. One may draw in a sample and measure the radioactive material present or collect the contaminant on a filter paper or other medium. Specific media can be selected to sample special contaminants uniquely. Samplers may be low-volume samplers, high-volume air samplers or lapel samplers. Monitors differ from samplers only in that they continuously, as opposed to periodically, measure the contaminant collected.

To measure radiation exposure from beta, X- gamma, and neutron radiation, dosimeters are used, some types of which are listed as follows:

- thermoluminescence dosimeter (TLD) badge,
- film badge,
- TLD ring,
- self-reading pocket dosimeter (pocket ionization chamber),
- alarming dosimeter,
- criticality dosimeter, and
- bubble neutron detector.

Measuring contaminants in the body or body fluids is most often done by whole-body counting (to detect gamma-emitting radionuclides in the body) and urinalyses. In urinalysis, the concentration of radionuclides is measured in a urine sample and related back to the amount that was present in the body. Whole-body counting and urinalysis are usually done routinely, as well as in the event of a potentially significant exposure. A third monitoring technique is measuring lead or other heavy metals in a blood sample, although this is usually performed only when a significant exposure to lead is suspected.

## 12.8 Guidance on Worker Protection

This section gives some references that would help establish a sound worker protection program. The list is divided into three main subject areas: radiation protection, industrial hygiene, and industrial safety.

References for radiation protection include a manual, texts, NCRP reports, and an NRC regulatory guide, as follows:

- U.S. Department of Energy Radiological Control Manual;
- Atoms, Radiation and Radiation Protection (Turner);
- Introduction to Health Physics (Cember);
- Operational Radiation Safety Program, NCRP Report No. 59;
- Operational Radiation Safety, NCRP Report No. 71; and
- Acceptable Programs for Respiratory Protection, USNRC Reg. Guide 8.15.

References for industrial hygiene follow:

- Patty's Industrial Hygiene and Toxicology (Clayton) and
- Fundamentals of Industrial Hygiene (Olishifski).

References for industrial safety follow:

- Accident Prevention Manual for Industrial Operations (NSC) and
- The Industrial Environment—Its Evaluation and Control (National Institute for Occupational Safety and Health).

## 12.9 Conclusions

Worker protection is an important aspect of any project. For decommissioning of nuclear facilities, worker protection takes on added meaning, since several different hazards are present simultaneously at many locations in the decommissioning project. This chapter identifies the different aspects of worker protection to be addressed in a decommissioning project.

## 12.10 References

Turner, J. E. 1986. *Atoms, Radiation and Radiation Protection.* Pergamon Press. Elmsford, New York.

Cember, Herman. 1969. *Introduction to Health Physics.* Pergamon Press. New York.

Clayton, George D. and Florence E. Clayton, Editors. 1991. *Patty's Industrial Hygiene and Toxicology*, Volume 1, Parts A and B, General Principles. Wiley.

DOE. June 1992. *Radiological Control Manual.* U.S. Department of Energy. DOE N 5480.6.

National Safety Council Staff. *Accident Prevention Manual for Industrial Operations*, Volumes 1 and 2. 1st Edition.

Olishifski, Julian B., Editor. *Fundamentals of Industrial Hygiene*, 2nd Edition. National Safety Council Staff.

NIOSH. 1973. *The Industrial Environment-Its Evaluation and Control.* National Institute of Occupational Safety and Health.

NCRP (National Council on Radiation Protection and Measurements). 1978. *Operational Radiation Safety Program.* National Council on Radiation Protection and Measurements. Report No. 59. Bethesda, Maryland.

NCRP. 1983. *Operational Radiation Safety.* Training. Report No. 71. Bethesda, Maryland.

NRC (U.S. Nuclear Regulatory Commission). October 1976. *Acceptable Programs for Respiratory Protection.* Regulatory Guide 8.15. U.S. Nuclear Regulatory Commission.

# 13.0 ENVIRONMENTAL PROTECTION

Environmental protection during decommissioning consists of two objectives: maintaining releases of contaminants from the site at levels compliant with applicable regulations and ensuring that any residual contaminants meet the site release criteria.

Pathways by which migration from the site could occur are considered to be air, surface water, groundwater, and shipments of waste or other materials/equipment. This chapter presents or references the applicable regulations and limits for each of these pathways. In addition, measures are identified for controlling releases by these pathways as well as for assessment (by effluent monitoring) and verification (by environmental monitoring).

## 13.1 Air Quality Protection

Air quality is protected by installing equipment in air exhausts to collect contaminants. Air pollution control systems (APCSs) described in Section 8.6.3 need to be used as part of thermal waste treatment systems. Most other exhausts can be controlled with HEPA filter systems. Where particle loading is high, prefilters and other particle collectors can be installed upstream of the HEPA filters.

The federal government and individual states have regulated thousands of commercial, industrial, and other activities to clean up the nation's air. CAA has undergone many revisions, with the latest in 1990. Within this national law, air quality regulatory compliance varies greatly from one state to another. While all areas are responsible for meeting the same basic national air quality standards, facilities in certain locations may have to comply with more stringent requirements if their air quality is significantly worse than the national standards. Existing air emission sources are regulated according to their emission, sources, and quantities. Key information can be found in 40 CFR Parts 60–61 and 42 USC Sections 7409 and 7472.

Six "criteria" or "conventional" pollutants are regulated under CAA in 40 CFR 50, including carbon monoxide, sulfur dioxide, lead, nitrogen oxides, ozone, and particulates (10 microns or less in size). EPA has set National Ambient Air Quality Standards for the six criteria pollutants, defining air quality targets. These standards are listed in Table 13.1.

In the late 1990s operating permits will be required under EPA's new National Air Emissions Permit Program if:

- any of a facility's sources emit 100 tons/yr or more of any conventional pollutant,
- a facility emits 10 tons/yr of any individual air toxic pollutant,
- a facility emits 25 tons/yr of any combination of toxic air pollutants,

- a source within a facility is subject to New Source Performance Standards, or
- a facility is subject to Prevention of Significant Deterioration standards or required to have New Source Review permits.

**Table 13.1. National Ambient Air Quality Standards**

| Pollutant | Standard |
|---|---|
| Particulates<br>Annual<br>24-hr | <br>50 μg/m$^3$<br>150 μg/m$^3$ |
| Sulfur Dioxide<br>Annual<br>24-hr | <br>0.03 ppm<br>0.14 ppm |
| Carbon Monoxide<br>8-hr<br>1-hr | <br>9 ppm (avg concentration more than once per year)<br>35 ppm (avg concentration more than once per year) |
| Nitrogen Dioxide<br>Annual | <br>0.053 ppm |
| Ozone<br>Maximum daily | <br>0.12 ppm |
| Lead<br>Quarterly | <br>1.5 μg/m$^3$ |

Standards that limit the concentration of radionuclides in effluent air are in DOE Order 5400.5 for government-controlled facilities and in 10 CFR 20 for commercial nuclear facilities.

40 CFR 61, Subpart H discusses the national standards for emission of radionuclides other than from U.S. DOE facilities. 40 CFR 61, Subpart I discusses the national emission standards for radionuclide emissions from facilities licensed by the NRC and federal facilities not covered by Subpart H. 40 CFR 61.92 states that emissions of radionuclides to the ambient air from DOE facilities should not exceed an amount that would cause any member of the public to receive an effective dose equivalent of 10 mrem/yr.

## 13.2 Surface Water Protection

Surface water can be protected by preventing and containing spills and by treating water before its discharge. Section 8.4 describes several technologies for treating water to remove solid material in different size ranges. Filtration and ion exchange are two common techniques used.

Through CWA, federal and state agencies establish standards and goals aimed at protecting the water quality in each state. The backbone of CWA is a comprehensive permitting scheme known as NPDES. The NPDES program requires a discharger to obtain a permit prior to discharging any pollutant into the navigable waters of the nation from any point source. NPDES permits establish the level of performance that a discharger must maintain, defined in terms of both the quality and quantity of pollutants in the discharge. CWA regulations are located in 40 CFR Parts 15, 25, 100–140, and 400–471.

An owner or operator of an onshore or offshore facility that might discharge harmful quantities of oil into navigable waters is required to prepare a Spill Prevention Control and Countermeasures (SPCC) Plan. This plan is designed to prevent oil spills and outline measures that will be taken in the event of a spill. The regulations applicable to SPCC plans can be found in 40 CFR 112. The SPCC Plan is typically developed during operations and can be applied to decommissioning with few, if any, modifications. The CWA contains specific provisions for regulating and handling oil and hazardous substances and establishes specific penalties and rules of liability for the unauthorized release of these materials. These provisions focus on reporting unauthorized leaks, spills, and discharges to water.

Concentration limits for radionuclides in water corresponding to the 100-mrem/yr population exposure limit are contained in Attachment 1 of DOE Order 5400.5. Values corresponding to a 100-mrem/yr population dose rate may also be derived from EPA drinking water standards.

## 13.3 Groundwater Protection

Groundwater can be protected by preventing and containing spills and keeping rainwater from flowing through contaminated areas.

Regulations that affect the monitoring of groundwater are located in SDWA, as well as in RCRA and CERCLA. In general, maximum contaminant levels (MCLs) issued under SDWA are employed as guides. Table 13.2 lists the MCLs located in 40 CFR 141. If an MCL for a hazardous constituent does not exist, the cleanup level is to be set within the protective range established for lifetime excess cancer risk from carcinogens. If a body of groundwater is not an actual or potentially reasonable future source of drinking water, alternative levels protective of the environment may be used.

**Table 13.2. Maximum Contaminant Levels**

| Constituent | MCL (ppm) |
|---|---|
| Arsenic | 0.05 |
| Barium | 1 |
| Benzene | 0.005 |
| Cadmium | 0.010 |
| Carbon tetrachloride | 0.005 |
| Chromium VI | 0.05 |
| p-Dichlorobenzene | 0.075 |
| 1,2-Dichloroethane | 0.005 |
| 1,1-Dichloroethylene | 0.007 |
| 2,4-D | 0.1 |
| 2,4,5-TP Silvex | 0.01 |
| Endrin | 0.0002 |
| Fluoride | 4.0 |
| Lead | 0.05 |
| Lindane | 0.004 |
| Mercury | 0.002 |
| Methoxychlor | 0.1 |
| Nitrate | 10 |
| Selenium | 0.01 |
| Silver | 0.05 |
| Toxaphene | 0.005 |
| 1,1,1-Trichloroethane | 0.2 |
| Trichloroethylene | 0.005 |
| Trihalomethanes, total* | 0.10 |
| Vinyl chloride | 0.002 |

* Including chloroform, bromoform, bromodichloromethane, and dibromochloromethane.

The MCL for Ra-226 and Ra-228 is 5 pCi/l. The MCL for gross alpha particle activity (including Ra-226 but excluding radon and uranium) is 15 pCi/l. As stated in 40 CFR 141.16:

> The average annual concentration of beta particle and photon radioactivity from man-made radionuclides in drinking water should not produce an annual dose equivalent to the total body or any internal organ greater than 4 millirem/year.
>
> Except for tritium and strontium-90, the concentration of man-made radionuclides causing 4 mrem total body or organ dose equivalents should be calculated on the basis of a 2 liter per day drinking water intake using the 168 hour data listed in *"Maximum Permissible Body Burdens and Maximum Permissible Concentration of Radionuclides in Air or Water for Occupational Exposure,"* NBS Handbook 69 as amended August 1963, U.S. Department of Commerce. If two or more radionuclides are present, the sum of their annual dose equivalent to the total body or to any organ should not exceed 4 millirem/year.

The average annual concentrations assumed to produce a total body or organ dose of 4 mrem/yr for tritium is 20,000 pCi/l; the concentration for Sr-90 is 8 pCi/l.

## 13.4 Shipments

Shipments of material leaving the site must not generate a hazard to the public. Materials released for unrestricted use will not contain regulated quantities of hazardous or radioactive contaminants. This needs to be verified prior to shipment by survey and/or testing.

Materials shipped according to 49 CFR Parts 171–179 have to be shipped in approved packages. In addition, radioactive materials shipments have to meet requirements limiting both dose rate and external surface contamination. Compliance with dose rate and contamination limits has to be established by survey and documented prior to shipment. Chapter 14 provides additional details.

## 13.5 Effluent Sampling and Monitoring

Air and water discharged during decommissioning should be sampled or monitored for several important reasons. Some of these reasons follow.

- ensure that emissions comply with the applicable regulations;
- determine compliance with official documents;
- evaluate the effectiveness of effluent treatment and control;
- identify potential environmental problems and evaluate the need for remedial actions or mitigation measures;
- support revision or reissuance of permits; and

- detect, characterize, and report unplanned releases.

Effluent monitoring should comply with existing regulations and should be conducted to provide representative measurements of the quantities and concentrations of pollutants in liquid and airborne discharges.

An assessment of each airstream discharged is good practice. This can be as simple as an isokinetic sampler downstream of a HEPA filter or as complicated as a real-time system monitoring the stack of an incinerator. The need for (real-time) monitoring, as opposed to sampling and analysis, depends on the potential significance of a control system failure. Detection technologies for air monitoring and the analysis of samples are essentially the same as those described in Chapter 7.

Water should also be monitored or sampled and analyzed prior to discharge. Monitoring of a continual discharge is complex because of the difficulty in detecting environmentally significant concentrations in a flowing stream. For most cases, it is recommended to collect discharged water in a tank for sampling and analysis. On receipt of acceptable analytical results, the water is then discharged on a batch basis.

## 13.6 Environmental Monitoring

An environmental monitoring program should be conducted during decommissioning to confirm the adequacy of the effluent monitoring. The amounts or concentration of contaminants in the environment adjacent to the site should be consistent with the history of discharges. In most decommissioning projects, contaminants will not be detectable off-site if the effluents are compliant with regulations.

The rigor required for environmental measurements during decommissioning is the same as that needed during the operation of the facility. However, the scope should be reduced, because the potential for release is usually significantly smaller. It is usually sufficient to measure the dose rates present at the site boundaries, the concentration of airborne radioactive particulates at sites at or near the site boundary, and the concentrations of radionuclides in adjacent waters. The analysis of samples of groundwater at on-site and nearby off-site locations should also be included.

## 13.7 Site Release Criteria

The final element of environmental protection is ensuring that the site meets the site release criteria. This in turn ensures that future exposures will be consistent with regulatory requirements if the release is for unrestricted use or commensurate with post-decommissioning protective measures, if there are remaining restrictions.

Chapter 3 of the handbook addresses the closeout phase of the project and identifies the requirements for a sampling and analysis plan, the final radiological survey, and independent verification.

## 13.8 Conclusion

Environmental protection during decommissioning is accomplished through the proper control of effluents. This is achieved by monitoring or sampling and analysis of these effluents, surveys of shipments, environmental monitoring, and the final site survey. Auditable records of environmental monitoring should be maintained in accordance with the applicable regulations.

## 13.9 References

10 CFR. 1993. *Energy.* U.S. Government Printing Off . Washington, D.C.

40 CFR. 1993. *Protection of Environment.* U.S. Government Printing Office. Washington, D.C.

DOE Order 5400.5. 1987. *Radiation Protection of the Public and the Environment.* U.S. Department of Energy. Washington, D.C.

42 USC Sections 7409–7472.

# 14.0 PACKAGING AND TRANSPORTATION

The primary purpose of this chapter is to identify the regulations that govern the packaging and transportation of hazardous materials that may be shipped from a decommissioning site and to identify, in general, the requirements of these regulations. It is not the intention of this chapter to interpret these regulations or duplicate them herein. Packaging and transportation of radioactive, hazardous, and mixed wastes are complex issues for the decommissioning planner because of the intricacy of the relevant regulation. Regulations have been established to protect the public from possible release of hazardous materials during transportation.

## 14.1 Packaging and Transportation Overview

The various types of waste that could be encountered or generated at a decommissioning site are listed below:

- TRU wastes,
- LLW,
- RCRA wastes,
- TSCA wastes,
- radioactive mixed wastes, and
- nonregulated wastes.

These waste types are defined in Section 14.4 and in the glossary of this handbook. The type and amount of hazardous material being generated at any decommissioning project site will vary from site to site, and therefore it is not possible to discuss in detail all the factors and options available for shipping each type of waste (i.e., physical form, size of shipment, location and type of site). The following sections discuss four major issues to be considered as part of packaging and transportation planning for decommissioning, including logistics, regulatory agencies, environmental and accident risks, and cost.

### 14.1.1 Logistics

Logistics applies to the transportation of hazardous materials from the time they are removed from storage at one location until they are placed in storage (or disposal as appropriate) at another location. Transportation/packaging logistics play a vital role in selecting and sizing dismantling equipment and treatment and storage facilities. It is imperative that logistics be considered as part of technology assessment. There are four general categories of transportation and packaging logistics to be considered in decommissioning, including routing, manifesting,

containers, and off-site shipment modes. These categories are discussed very briefly in the following paragraphs.

To a minor degree, regulations vary among states and according to the mode of transportation selected, but these minor variations can substantially affect routing issues. It is important that routing issues be resolved very early in the decommissioning program because these requisite specifications should be available before decontamination and waste treatment technology assessments have been concluded.

Manifesting is also a major transportation regulatory issue and is an integral part of waste tracking and accountability. These records are used to prove to the regulators at the end of the program that all wastes generated at the decommissioning site were disposed of in an environmentally acceptable manner and according to the plan submitted with the application for operating permits.

Containers are a major part of transportation logistics. A container can serve many functions; it can be used as

- a storage receptacle,
- a transportation package,
- a major part of the transportation vehicle, or
- a waste package.

It is often least expensive if containers can serve more than one of these functions.

The modes of off-site shipment are railroads, trucks, and barges. The type of packaging and method of transportation are so closely interrelated that they cannot be separated and are dependent on a variety of factors. These factors include, but are not limited to, the following:

- type of hazardous waste;
- physical form (solid, liquid, or gas);
- size of shipment;
- location and type of site;
- environmental and accident risks;

- exposure risks; and
- cost.

All of these factors are also interrelated, and any one of them may preclude or dictate the type of package or method of transportation. For example, a disposal site that is not accessible by rail or barge would require the waste to be transported by truck, at least part of the way; this necessity would automatically dictate the size and type of packaging that could be used.

### 14.1.2 Regulatory Agencies

Several agencies (e.g., NRC, EPA, DOT) regulate the transportation of hazardous materials. The regulations set forth by these agencies must be adhered to whenever transporting hazardous material to off-site locations via public roads, rail, waterways, or airways (transport by air is very limited).

These following regulations are listed according to the promulgating agency.

- NRC
  - 10 CFR 71, *Packaging or Transportation of Radioactive Materials*
- U.S. Postal Service
  - 39 CFR 124, *Domestic Mail Manual, U.S. Postal Service Regulations* (Postal regulations for transport of radioactive matter are published in U.S. Postal Service Publication No. 6 and in the U.S. Postal Manual).
- EPA
  - 40 CFR 191, *Environmental Radiation Protection Standards for Management and Disposal of Spent Nuclear Fuel, High Level and Transuranic Radioactive Wastes*
- DOT
  - 49 CFR 171, *General Information, Regulations, and Definitions*
  - 49 CFR 172, *Hazardous Materials Tables and Hazardous Materials Communications Regulations*

- 49 CFR 173, *Shippers—General Requirements for Shipments and Packagings*
- 49 CFR 174, *Carriage by Rail*
- 49 CFR 175, *Carriage by Aircraft*
- 49 CFR 176, *Carriage by Vessel*
- 49 CFR 177, *Carriage by Public Highway*
- 49 CFR 178, *Shipping Container Specifications*
- 49 CFR 179, *Specifications for Tank Cars*

DOE orders related to packaging and transportation are identified as follows

- 1540.1C, *Materials Transportation and Traffic Management*
- 1540.2, *Hazardous Material Packaging for Transport-Administrative Procedures*
- 1540.3, *Base Technology for Radioactive Material Transportation Packaging Systems*
- 5400.3, *Hazardous and Radioactive Mixed Waste Program*
- 5480.3A, *Safety Requirements for the Packaging and Transportation of Hazardous Materials, Hazardous Substances and Hazardous Wastes*
- 5610.1, *Packaging and Transportation of Nuclear Explosives, Nuclear Components, and Special Assemblies*
- 5820.2A, *Radioactive Waste Management*

State governments also exercise some control over shipment of radioactive materials. State highway departments regulate gross vehicle weights, vehicular dimensions, and other parameters for radioactive shipments, just as they do with other types of shipments. Some of the regulations that states have adopted or proposed are

- special routing,
- advance notification for shipments of large quantities of materials,

- state inspections of some types of radioactive shipments,
- prohibition of certain types of shipments within the states,
- prior approval of shipments,
- exclusive vehicle use for radioactive shipments,
- use of pilot vehicles,
- speed restrictions,
- specific hours of movement, and
- accompaniment by radiation monitoring personnel.

The variation of regulations between adjacent states often requires special considerations for interstate shipments.

All the state and federal regulations are very specific concerning packaging, labeling, shipping, and documentation requirements for the transport of hazardous materials; and they can be a deciding factor in what transport mode is actually chosen for the shipment of a particular hazardous material. A comparison of the different transportation modes based on regulations is not possible until the particular type of material to be transported has been sufficiently defined. However, in the case of radioactive material, one of the most important factors is the quantity of material to be shipped.

### 14.1.3 Environmental and Accident Risks

When choosing a mode of transport, consideration must be given to potential environmental and accident risks. The potential for such risks can be reduced by choosing a route for each alternative that minimizes travel time and distance, the risk of exposure to surrounding populations, and the chance of an accident that could cause spillage of the hazardous material.

As much as possible, routes for shipping hazardous material should be restricted to avoid centers of population, special risk areas resulting from local road or rail conditions, areas of high accident frequency, extremes in ambient conditions such as very cold or very hot weather, high elevations, and delays. Such restrictions reduce the probability of an accident.

Requiring hazardous material to be shipped over routes that avoid these hazards reduces the consequences of those accidents in which a release of radioactivity is involved or persons in the area are exposed to direct radiation. In the case of radioactive shipments, the dose would be smaller if the number of people in the affected area were smaller. The risk from accidents, however, involves both frequency and consequences. If the number of miles traveled is increased

by the special routing restriction, the frequency of accidents will be increased because the number of accidents is proportional to the number of miles traveled.

In addition, the risk from accidents resulting from common causes far overshadows the risk posed by radiological effects. For example, about one-third of truck accidents result in injuries, and some of these result in fatalities, whereas only a very small fraction of all accidents result in radiological effects. Experience and statistics show that the probability of an accident causing radiological effects is extremely small. Therefore, special routing to avoid centers of population to reduce radiological effects, which are already small, can be expected to have only a very small effect. Any reduction in the already very small risk from radiological effects may be outweighed by an increase in the risk from common causes.

Transportation accidents have a wide range of severity. Most accidents occur at low vehicle speeds and have relatively minor consequences. In general, as speed increases, accident severity also increases. However, accident severity is not a function of vehicle speed only. Other factors, such as the type of accident, the kind of equipment involved, and the accident location can have an important bearing on accident severity. Accidents may involve impact and sometimes puncture or fire effects. The major consideration when evaluating an accident for severity is whether the waste package has been breached or damaged.

#### 14.1.3.1 Truck Transportation

In comparison with other modes of transport available, trucks are the most flexible because they can follow a route that would minimize environmental and accident risks (e.g., avoiding congested areas and following routes to minimize the risk of accidental spills). Most carriers follow the interstate highway system whenever possible. Truck shipments also have the advantage of being able to transport material between the generating facility and storage area with a minimum of intermediate steps, in contrast to barge and rail shipments, which might require the material to be trucked to nearby rail depots or dock facilities.

The principal disadvantage of truck shipment is that trucks have a smaller capacity than either railcars or barges which means that in some cases more trucks than railcars or barges would be required to ship the same amount of material. In addition, some shipments cannot be made by truck because of the size or weight of the package.

Truck shipments are also subject to individual state and local regulations. States impose controls on the weight of loads on roadways and bridges; on travel at specific periods of the day or night; and on the use of certain routes, bridges, and tunnels. States also impose requirements for prior notification. All these limitations can affect the choice of routes to be followed.

Truck accidents involving stationary, rigid objects, such as concrete abutments or bridge structures, are likely to be the most damaging. In collisions with an object, yielding or crushing of the vehicle or the object with which the vehicle collides reduces the impact received by the

package. Rollovers usually occur at higher speeds and must be considered as potential contributors to major damage of a package.

### 14.1.3.2 Barge and Rail Transportation

Barge and rail transport are the least flexible modes of transport in terms of routing since they are limited to the waterway or rail system nearest to the disposal area. Generally, river and rail systems go through populated areas, which has implications for assessing potential accident risks. In addition, barge shipments have the potential of contaminating the source of water supply for a populated area in the case of an accidental spill.

One of the major disadvantages to rail and barge shipment arises when the generating facility and/or storage area do not have rail or docking facilities on site. This requires that the material be shipped by truck to nearby rail or docking facilities, thereby increasing the number of times the shipment is handled and the potential of accidental spill and exposure.

In rail accidents, damage to the cargo may occur in both collision and derailment type accidents. Rail grade-crossing accidents (train-truck or train-auto) rarely involve significant damage to cargo, and other collision accidents that do not cause derailment are not likely to involve significant damage to a package. Accidents with the highest probability of producing significant damage to shipment containers are overland derailment accidents.

Few data are available on severe accidents involving barges. Barges travel only a few miles per hour; therefore, the velocity of impact in barge accidents is small. Some accidents do cause significant damage, however. For example, a forward barge could collide with a bridge pier and suffer crushing forces from other barges being pushed into it, or a coastal or river ship could knife into a barge. Fires could result in either case, but the likelihood of a severe fire in barge accidents is small because of the availability of water at all times. The likelihood of cargo damage occurring in a barge accident is, therefore, much less than in the case of rail accidents.

### 14.1.3.3 Exposure Risks

Exposure hazards resulting from accidents are dependent upon the mode of transport and the type of material being transported. The mode of transportation determines both the severe accident frequency (where damage to the package and contents would be expected) and the proximity to population centers. The material's toxicity and ease of dispersal define the area in which exposure effects will be significant. However, some radionuclides cause exposures near the accident scene even without being dispersed.

Rail accidents (e.g., derailments) are often severe enough to affect the integrity of the hazardous material package, and rail traffic passes through urban centers. Therefore, the risk of exposure from rail shipments is expected to be higher than that from barge or truck transportation. Trucks and barges have similar exposure risks. Tank trucks, because of their smaller capacity and lower accident frequency rate, have less of an environmental impact than rail tank cars. Transport by

barge is the only mode likely to cause water pollution damage. Expected annual property damage is lowest for trucks, followed by barge and rail.

For radioactive material, the radiation level at the surface of packages is limited by DOT regulations (49 CFR 173.441). Methods for estimating external dose rates are discussed in Appendix A. The risk of radioactive contamination or radiation exposure from accidents in transportation is extremely small. The most common form of transport of radioactive waste is exclusive-use transport vehicles, as defined in 49 CFR 173.403(c).

### 14.1.4 Cost

The cost of shipping material by any mode is based on factors such as the size and weight of the shipment, the type of material, the distance to be traveled, and the carrier or company chosen to transport the material. It is therefore impossible to quantitatively compare the cost of different modes of transport. Qualitatively, barge transportation is the lowest cost mode for large quantities of materials, if direct access to a waterway is available at both ends of the shipment. Railroads also have a cost advantage for large amounts of material, provided there is rail access on both ends, especially for long distance shipments. Truck shipment is advantageous when other modes are not available, for small quantities or intermittent shipments and for short distances, especially if the shipment can be made without qualifying as "oversize" or "overweight."

Intermodal shipment, which will require one or more package transfers during transportation, can reduce costs if direct access is not available. For example, at Shippingport the 900-ton reactor pressure vessel package was moved 1/3 of a mile by heavy haule transferred to a barge, and moved 31 mi to the disposal site—after the 8,500-mi barge trip.

## 14.2 Transportation of Hazardous Materials

The DOT hazardous materials regulations (49 CFR Parts 171–179) address packaging and transportation requirements for hazardous materials and hazardous wastes. These regulations have remained essentially unchanged since the early 1980s in regard to transportation of multiple hazard materials. DOT has set forth requirements for the shipment and packaging of all radioactive materials in 49 CFR 173; these requirements are in addition to those of NRC in 10 CFR 71. The DOT requirements include activity limits and radiation level limits for packages, transportation rules for all packages, and prescribed tests to be performed on these packages. The NRC regulations (10 CFR 71) establish criteria for packaging, preparing for shipment, and transporting radioactive material. Generators must conform to these regulations, except in cases when the waste package contains radioactive materials with a specific activity less than 2 nCi/g.

The NRC regulations are supplemental to those of DOT and primarily pertain to material with higher activities than those covered by the DOT regulations. Shippers and generators must consider both sets of regulatory requirements prior to packaging and transporting.

There are two requirements in the NRC regulations that are not addressed by DOT. First, licensed materials exceeding specified activity levels must be shipped in NRC approved packages with an NRC certificate of compliance. Second, NRC requires advance notification of shipments of wastes across state lines when shipments contain radioactive materials.

### 14.2.1 Elements of Hazardous Materials Transportation

The DOT and NRC regulations specify hazard classification and description, identify authorized packaging, establish communication standards (e.g., markings, labels, placards, documentation), and specify modal requirements. The following list summarizes the steps involved in packaging hazardous materials for transportation. These regulations specifically identify procedures for classifying and shipping materials that have multiple hazards, such as radioactive mixed waste.

- Naming—The first step in the transportation of a hazardous material is to determine the proper shipping name. DOT has published a table in 49 CFR 172.101 that lists over 3,000 acceptable shipping names to be used in describing hazardous materials for transportation. To transport a hazardous material, it must be assigned the best available name from this list. This table also refers the shipper to the specific packaging and shipping rules for the material. Each name is listed with a hazard class, assigned that hazard class and an identification number [four digits preceded by the letters *UN* for internationally recognized (United Nations) names or *NA* for names valid in North America only].

- Classification—The second step is to determine the actual hazard class. DOT defines 24 hazard classes and divisions, ranging from explosives and radioactive to "miscellaneous hazardous materials." These classes are given in the second column of the Hazardous Materials Table. Some hazard classes are also subdivided into "packing groups," indicating the degree of hazard posed by the material.

- Picking a package—The third step is to select a package. DOT provides various packaging alternatives for each hazardous material, ranging from ampule-sized packages to tank trucks or railcars. Each package should meet explicit design and performance standards. Hundreds of different package specifications exist in DOT rules. There is no single package suitable for the transportation of all hazardous materials.

- Preparing shipping papers—Each shipment of hazardous materials must be accompanied by shipping papers. The shipping paper lists the names, hazards, and quantity of material being shipped. Shipping papers must be maintained in the transport vehicle, readily accessible to the driver or emergency response personnel.

- Marking and labeling—Each package of hazardous materials must be marked with the proper shipping name and identification number and labeled with a DOT-specified diamond shaped label to indicate its hazard class. Additional marking and labeling requirements may apply, depending on the material being shipped. Required markings must meet general criteria, such as being durable, written in English, and away from and unobscured by other markings.

- Providing and using placards—Placards are large diamond shaped graphics, similar to labels, that are applied to transport vehicles and bulk tanks. Some extremely hazardous materials require placards if they are shipped in any quantity. Low specific activity shipments and most hazardous materials shipments that exceed 1,000 lb per vehicle must be placarded.

- Loading, moving, and unloading—Loading, moving, and unloading hazardous materials are defined in DOT rules as the responsibility of the "Carrier." Hazardous materials carriers are regulated by "mode of transportation" [air, vessel (ship or boat), rail, or highway (motor vehicle)].

- Incidents and emergencies—DOT requires that certain basic "emergency response information" accompany every hazardous materials shipment and be available in case an incident occurs. If an incident does occur during transportation, DOT, EPA, and other agencies require formal reports. Immediate notification must be made to DOT for certain incidents, including suspected radioactive contamination. A written report is required within 30 days to follow up any of these events and for any unintentional release of a hazardous material from its package.

The most important step in packaging and transporting any hazardous waste is early material identification. Not until material is correctly identified can the applicable regulatory requirements be determined and the material be classified according to DOT requirements. Table 14.1 lists class numbers, division numbers, class or division names and those sections of 49 CFR 173 that contain definitions for classifying hazardous materials, including forbidden materials.

For cases where the radioactive content qualifies as "limited quantity," specific exceptions apply. These exceptions are identified in 49 CFR Sections 173.421, 173.421-1, and 173.421-2. In general, when a limited quantity of radioactive material also meets the definition of another DOT hazard class, the other hazard class takes precedence. For example, a waste solution meeting the corrosive material hazard class and limited quantity of radioactive material would be classed, packaged, and shipped as a DOT corrosive material. Certain package markings and shipping paper entries are required to address the limited radioactive hazard as found in 49 CFR 173.421-2.

**Table 14.1. Hazardous Materials Classes and Index to Hazard Class Definition**

| Class No. | Division No. (if any) | Name of Class or Division | 49 CFR Section for Definitions |
|---|---|---|---|
| None | None | Forbidden Materials | 21 |
| None | None | Forbidden Explosives | 53 |
| 1 | 1.1 | Explosives (with a Mass Explosion Hazard) | 50 |
| 1 | 1.2 | Explosives (with a Projection Hazard) | 50 |
| 1 | 1. | Explosives (with Predominantly a Fire Hazard) | 50 |
| 1 | 1.4 | Explosives (with No Significant Blast Hazard) | 50 |
| 1 | 1.5 | Very Insensitive Explosives: Blasting Agents | 50 |
| 1 | 1.6 | Extremely Insensitive Detonating Substances | 50 |
| 2 | 2.1 | Flammable Gas | 115 |
| 2 | 2.2 | Nonflammable Compressed Gas | 115 |
| 2 | 2.3 | Poisonous Gas | 115 |
| 3 | None | Flammable and Combustible Liquid | 120 |
| 4 | 4.1 | Flammable Solid | 124 |
| 4 | 4.2 | Spontaneously Combustible Materials | 124 |
| 4 | 4.3 | Dangerous When Wet Material | 124 |
| 5 | 5.1 | Oxidizer | 127 |
| 5 | 5.2 | Organic Peroxide | 128 |
| 6 | 6.1 | Poisonous Materials | 132 |
| 6 | 6.2 | Infectious Substance (Etiologic Agents) | 134 |
| 7 | None | Radioactive Material | 403 |
| 8 | None | Corrosive Material | 136 |
| 9 | None | Miscellaneous Hazardous Material | 140 |
| None | None | Other Regulated Material: ORM-D | 144 |

DOT's recent HM-181 ruling has resulted in changes in hazard communication. DOT has allowed a phased transition with the new regulations, but eventually all materials must change over to the HM-181 "communication except placards" rule. *Communication except placards* include hazard classification, proper shipping names, markings, labels, and descriptions on shipping papers. The required placards should be determined by reference to HM-181 placarding rules and the table of "equivalent placards" in 49 CFR 171.14(c)(2).

HM-181 changed the hazard classification Other Radioactive Material (ORM)-E to Class 9 *Miscellaneous Hazardous Material.* It is necessary to review the regulations to determine the appropriate hazard class for any material formerly shipped as ORM-E.

The Class ORM-E was provided for EPA-regulated hazardous substances and hazardous wastes. If these substances do not meet the definition of any higher hazard, they are now Class 9 (49 CFR 173.140). Class 9 also includes any material that has noxious or other properties that could, for example, cause discomfort to a flight crew member. Please note that the proper shipping names, *hazardous substance, liquid or solid, not otherwise specified (n.o.s.)* have been changed to *environmentally hazardous substances, liquid or solid, n.o.s.*; and the UN/NA numbers for all previous ORM-Es are changed under HM-181.

The following sections describe in more detail the elements of hazardous materials transportation, including naming, packaging, shipping papers, marking and labeling, placards, loading, moving, and unloading, and incidents or emergencies.

#### 14.2.1.1 Naming

The proper shipping name is determined from the Hazardous Materials Tables (HMT), column 2, found in 49 CFR 172.101. All the requirements and actions taken by any personnel coming in contact with the material—from the beginning to the end of the transportation cycle—are based upon the original identification and classification of the material. Naming is therefore one of the most important steps in the packaging/transportation cycle; it should begin early in the planning process and be well defined no later than the site characterization stage. Most radioactive wastes are described as *Radioactive Material, Low Specific Activity n.o.s.*, or *Radioactive Material n.o.s.*

#### 14.2.1.2 Packaging

The authorized packaging for other hazardous materials is determined from HMT, columns 8a, 8b, and 8c, based on the hazard class and proper shipping name selected. For waste classified as other than radioactive because of a limited quantity of radioactive material (49 CFR 173.421), the packaging reference would be based on the hazardous material.

The packaging references for radioactive materials are 49 CFR Sections 173.415–419, 173.421, and 173.425. For these materials, the references lead to a small number of DOT specification containers or to performance-based packages authorized by either DOT, DOE, or NRC (e.g., Type A or Type B packaging).

For limited quantity and most low specific activity (LSA) radioactive waste, the material can be packaged in strong, tight industrial packages that will retain the material during conditions normally incident to transportation. For Type A radioactive waste, the material must be placed in defined packaging systems, tested, and documented as providing containment during specified test conditions that simulate normal conditions of transportation found in 49 CFR Sections 173.465 and 173.466. The packages must also be compatible with the payload, so that package effectiveness will not be reduced (49 CFR 173.24). For Type B quantities and certain fissile radioactive materials, the packaging system used must demonstrate the ability to withstand hypothetical accident conditions as prescribed in 49 CFR 173.467 and 10 CFR 71. The testing, evaluation, and analysis of the package and its performance to these standards must consider the potential contribution and impact of the mixed-waste constituents in the payload.

#### 14.2.1.3 Shipping Papers

Subpart C of 49 CFR 172 identifies the shipping paper requirements. The shipment description must include information such as the number and type of packages, the proper shipping name, hazard class, and UN/NA identification numbers for each package. For packages containing mixed hazards, the secondary hazard class may be entered in parentheses within the basic description.

Once an establishment determines that its waste is regulated, a number of responsibilities follow. The first is to obtain an EPA identification number. This unique number is used systematically to track waste from generation to disposal through the manifest and biennial report. Each generator must fill out a multicopy form, called a *manifest*, that accompanies waste leaving the facility and continues with it to its ultimate disposal. Manifests are essential to the RCRA control strategy. The tracking system for manifests includes the EPA identification number; the name and address of transporter, treater, storer, or disposer; and a description of the wastes, including type, quantities, and official classifications. States require from four to eight copies of the manifest for each shipment. Copies of the form are sent back to the generator from the transporter upon completion of delivery. If a generator has not received a copy of the manifest within 35 days of initial dispatch, then the generator is required to investigate. After 45 days without confirmation of delivery, the generator must file an "exception report" with the appropriate regional EPA office. Finally, a provision mandated by a 1984 amendment to RCRA requires that manifests also contain certification that the generator is minimizing hazardous waste as much as economically practical and that the chosen method of disposal minimizes risk to human health and the environment. Generators must keep all records of hazardous waste activity, including manifests, for 3 yr and submit biennial reports that summarize on- and off-site hazardous waste activity during the previous calendar year.

#### 14.2.1.4 Marking and Labeling

Subpart D of 49 CFR 172 identifies marking requirements. Required markings include such attributes as proper shipping name, UN/NA identification number, and name and address of the

shipper or receiver. For most mixed hazardous material, the name of the principal constituents associated with the hazard must be marked on the shipping container with the proper shipping name.

Subpart E of 49 CFR 172 identifies labeling requirements. Waste generators are required to label the DOT hazard class and any secondary hazards based on the listed criteria. For example, a radioactive material that is also corrosive would have both radioactive and corrosive labels applied.

#### 14.2.1.5 Placards

Subpart F of 49 CFR 172 identifies placarding requirements based on the DOT hazard class. Secondary hazards normally do not affect the placarding requirements unless the waste also qualifies as a "poison inhalation hazard" per 49 CFR 173.2(a). In this situation, multiple placards representing each hazard are required.. For example, a flammable liquid also meeting the criteria for a poison inhalation hazard would require flammable and poison placards mounted on the vehicle.

#### 14.2.1.6 Loading, Moving, and Unloading

Transporters of hazardous waste by highway, rail, water, or air are required to obtain EPA identification numbers. Hazardous waste transporters are not allowed to accept shipments of hazardous waste without completed manifests. Transporters must only use facilities with RCRA permits and cannot store waste for more than 10 days without becoming subject to storage facility regulations. Also, transporters that mix hazardous waste may be subject to generator regulations [see 40 CFR 263.10(c)(2)].

#### 14.2.1.7 Incidents and Emergencies

Subpart G of 49 CFR 172 contains the requirements for emergency response information. These requirements include incorporating or attaching to the shipping paper the emergency response and accident mitigation information applicable to the material being shipped and an emergency contact telephone number. Minimum guidelines for the type of information and how it is to be presented are addressed by DOT in 49 CFR 172.602. Very strict requirements (49 CFR 172.604) apply to the location of the telephone number and especially to the availability of someone to answer anytime the shipment is in transport. Also, the individual answering the telephone must be knowledgeable or have access to a person who is knowledgeable about the hazards of the materials so as to mitigate an accident situation.

Transporters are subject to joint EPA and DOT regulations concerning spilling and reporting of spills. They are required to notify the National Response Center within 24 hr when the spill exceeds reportable quantities (see 40 CFR 302). Reportable quantities range from 1 lb (0.45 kg) to 5,000 lb (2,250 kg). If a spilled substance is not listed, then the default reportable quantity equals 1 lb (0.45 kg). Lastly, transporters must retain their records for a minimum of 3 yr.

### 14.2.2 Elements of Radioactive Material Shipments

The DOT regulations (49 CFR Parts 170–178) establish criteria for the safe transport of radioactive material on public highways. Many of these requirements are based on accident scenarios and limits for inhalation pathways. The following list summarizes the DOT requirements for shipping LLW. Refer to applicable CFRs for more details.

- Radioactive material definition—*Radioactive material* is defined for shipping purposes as any material with a specific activity greater than 2 nCi/g. Although this criterion implies that waste with radionuclide concentrations of less than 2 nCi/g could be considered nonradioactive, it is emphasized that the de minimis level or limit of no regulatory concern has not been established for disposal of LLW.

- Excepted radioactive materials—Certain types of radioactive material are excepted from DOT packaging, marking, and labeling requirements. Even though these exceptions usually cover manufactured articles, instruments, and devices common to the commercial and industrial sectors, generators should examine the specific criteria to determine whether their wastes are excepted from DOT requirements.

- DOT forms of waste—DOT regulations recognize two forms of radioactive materials, normal and special. Most LLWs suitable for transport are normal-form materials. The special form of radioactive material usually consists of either a solid waste or an encapsulated waste not readily subject to degradation after disposal (49 CFR 173.469). DOT transportation criteria for normal-form material are more stringent than those for special-form material.

- Physical form—Liquids cannot be transported unless the container in which the liquids are placed contains sufficient absorbent material to absorb twice the volume of liquids being shipped (see 49 CFR 173.412). DOT requirements for liquids packaging apply to only a minor portion of the LLW that is shipped (e.g., liquid-scintillation fluid). There are other restrictions on the disposal of liquids. DOT requirements also pertain to off-site shipment of small samples for analysis and to common carrier shipment of radioactive liquids between NRC-licensed and DOE-owned facilities.

- Radiation levels—LLW is usually transported via exclusive-use vehicles in one of the following shipping configurations, with the radiation level as noted:

- unshielded, closed vans with 1,000 mrem/hr at the outer surface of the package, 200 mrem/hr at any point on the outer surface of the vehicle, and 10 mrem/hr at 2 m from the outer surface of the vehicle;

- unshielded, open flatbed trucks with 200 mrem/hr at any point on the vertical planes projected from the outer edges of the vehicle and 10 mrem/hr at 2 m from the outer surface of the vehicle;

- shielded shipments with 200 mrem/hr on the surface of the shipping cask or shield and 10 mrem/hr at 2 m from the vertical planes projected by the outer surfaces of the vehicle.

• Package classification—DOT's method of classifying packages is based on the potential inhalation dose to the public in the event of an accident where 0.1% of the package contents would be released. The inhalation dose varies according to the radionuclide in question; therefore, DOT has assigned dose-related values for 250 nuclides. These values are used to classify individual packages. Because of the complex requirements, each generator should evaluate shipping needs and package classification regulations with the permitting agency before final selection of a waste-processing system (Corbitt 1990).

## 14.3 Packaging of Hazardous Materials

Requirements for packaging hazardous materials are specified in 49 CFR 173. This chapter highlights some of those requirements as they pertain to the shipment of radioactive materials, including wastes, other hazardous and toxic materials, and mixed wastes. The reader should refer to the regulations to be sure that each shipment is made correctly. This chapter is not intended to be a substitute for the regulations.

### 14.3.1 Packaging of Radioactive Materials

For the purposes of transportation, materials containing radionuclides at concentrations less than 0.002 μCi/g are not considered radioactive, and DOT rules regarding this hazard do not apply. For greater concentrations, the material is classed as *radioactive*.

Three items of information about a radioactive material are required to prescribe the proper packaging—the radionuclides involved, their quantity, and their form. *Normal form* is the kind most often encountered during decommissioning. *Special form* is typically radioactive material in a hardened configuration, such as a capsule that cannot be opened without destroying it.

Knowing the identity of the radioactive material allows one to determine the "$A_2$" quantity. the $A_2$ quantities for most common radionuclides, are defined in 40 CFR 173.435, and Part 173.434 of the code includes instructions for dealing with unlisted radionuclides and mixtures.

The quantity of radioactive material is compared with $A_2$ to determine the type of packaging required as follows:

| Quantity | Packaging |
|---|---|
| Solids <0.001 $A_2$ | Limited quantity |
| 0.001 $A_2$ to $A_2$ | Type A Packaging |
| >$A_2$ | Type B Packaging |

Packaging requirements for limited quantities are the least stringent. Details are given in 49 CFR 173.421. Type A packaging must be designed to withstand the effects of normal transportation (e.g., vibration). Details are provided in 10 CFR Sections 173.411, 412, and 465. Type B packaging must be designed to withstand the effects of accident conditions as described in 10 CFR 71.

#### 14.3.1.1 Low Specific Activity

LSA materials are those in which the radioactive material is spread throughout other material (or dilute). The hazards from this kind of material are lower, and packaging requirements are somewhat relaxed. The concentration limits that define LSA are defined in 49 CFR 173.403. Shipments that meet these definitions may be transported according to 49 CFR 173.425, which requires DOT specification 7A Type A packages, or "strong, tight packages," if shipped by exclusive-use vehicle.

#### 14.3.1.2 Other Packages

Additional packaging requirements are defined for radioactive materials that possess certain other characteristics, some of which include the following:

- fissile material,
- pyrophoric material,
- oxidizing material, and
- uranium hexafluoride.

TRU waste may be shipped in packages that meet the aforementioned requirements for shipping, as well as the requirements for storage at the recipient's site. One such package is TRUPACT, a box-shaped packaging system that can hold thirty-six 55-gal drums or other boxes and bins.

TRUPACT was developed by Sandia National Laboratories for contact-handled TRU (CHTRU) waste and is suitable for both rail and truck shipment.

#### 14.3.1.3 Package Conditions

Packages for shipping radioactive materials must be used in such a way that hazards during transportation are kept within prescribed limits. Limits apply to the amount of smearable contamination on the external surface of the package (49 CFR 173.443) and dose rates adjacent to the package and the vehicle (49 CFR 173.441).

### 14.3.2 Packaging of Other Hazardous Materials

Packaging for other hazardous materials is regulated by 49 CFR 172.101 based on the proper shipping name and hazard classification. Title 49 CFR 172.101 gives the packing groups (I, II, or III) and identifies the section in 49 CFR 173 where the appropriate authorized packaging can be found. Packaging groups are applicable materials that are neither explosive (Class I) nor radioactive (Class 7). The lower the class of the material, the more stringent the requirement. Authorized packaging is defined for solids and liquids and for bulk and nonbulk packages.

### 14.3.3 Packaging of Mixed Wastes

Packaging for wastes that are hazardous materials because of their radioactivity (>0.002 μCi/g) and for any other hazardous contaminant (according to 49 CFR 172) must be selected after considering both kinds of waste. Packaging requirements are based on the classification, which, in turn, is based on the most significant hazard. Table 14.2 provides priorities for the classification of radioactive materials that also contain other hazardous materials.

Class 7 materials are packaged according to their radioactive component. See Section 14.3.1 and related rules and regulations. Other classes of materials are packaged according to the other hazardous material. See Section 14.3.2 and the rules and regulations referenced therein.

## 14.4 Categories of Waste

There are various categories of hazardous materials and wastes that may be present on any decommissioning project; however, the type and quantity will vary from facility to facility. The material may be solid, liquid, or gas and may have been left on site prior to closure of the facility or generated during decontamination and dismantling activities. These materials range from radioactive to nonregulated, including radioactive mixed waste, and they are defined below.

**Table 14.2. Priority Classifications of Radioactive Materials Containing Other Hazardous Materials**

| Material | Priority Classification |
|---|---|
| Radioactive Material (Except Limited Quantities) and | |
| Class 1 (explosives) | 1 |
| Organic peroxides | 5.2 |
| Infectious substances | 6.2 |
| Wetted explosives | 4.1 |
| Anything else | 7 |
| Limited Quantity Radioactive Material and | |
| Class 9 | 7 or 9* |
| Anything else | Classification of the other material |

* (see 49 CFR Parts 173.421–2(b))

### 14.4.1 Transuranic Wastes

Elements with atomic numbers greater than that for uranium (i.e., 92) are known as transuranium elements (see Table 14.3 for elements and isotopes). Most isotopes of these elements emit alpha radiation. Wastes containing more than 100 nCi/g of the long-lived (half-life >20 yr) of these radioisotopes are called TRU wastes. Exceptions to this classification include wastes that DOE has determined do not require a high degree of isolation and wastes approved for disposal on a case-by-case basis by NRC in accordance with 10 CFR 61. EPA provides environmental radiation protection standards for the management and disposal of TRU in 49 CFR 191. Local requirements may also affect whether certain isotopes of uranium (e.g., U-233) and plutonium (e.g., Pu-238 and Pu-241) are handled as TRU wastes.

Although a few daughter products of the TRU elements have energetic gamma emission, most TRU waste is classified as CHTRU, meaning it may be handled with only the shielding provided by the waste packaging itself. About 3% of retrievable TRU waste contains enough of the beta-, gamma-, and neutron-emitting nuclides (e.g., fission products) to require remote handling and be designated as remotely handled TRU (RHTRU) waste.

Activity thresholds for TRU waste vary from country to country. In the United States, wastes that are not classified as high-level radioactive waste, and have concentrations greater than 100 nCi/g of long-lived, alpha-emitting radionuclides are designated as TRU wastes. Wastes containing activity levels below this threshold are classified as LLW.

The principal sources of TRU waste are fuel reprocessing and waste immobilization facilities, fuel fabrication for recycling of plutonium, and weapons material (defense) production. TRU waste can also be generated during the decommissioning of nuclear reactors or fuel cycle

**Table 14.3. TRU Elements and Alpha Emitters**

| Atomic Number | Element Name | Nuclides | Half-Life (yr) | Specific Activity (Ci/g) |
|---|---|---|---|---|
| 93 | Neptunium (Np) | Np-237 | $2.14\times10^{6}$ | $7.0\cdot\times10^{-4}$ |
| 94 | Plutonium (Pu) | Pu-238 | 87.8 | 17 |
| | | Pu-239 | $2.4\times10^{4}$ | $6.2\cdot\times10^{-2}$ |
| | | Pu-240 | 6540 | 0.23 |
| | | Pu-242 | $3.9\times10^{5}$ | $3.8\cdot\times10^{-3}$ |
| | | Pu-244 | $8.3\times10^{7}$ | $1.8\cdot\times10^{-5}$ |
| 95 | Americium (Am) | Am-241 | 433 | 3.4 |
| | | Am-243 | 7,370 | 0.2 |
| 96 | Curium (Cm) | Cm-243 | 28 | 53 |
| | | Cm-245 | 8,500 | 0.17 |
| | | Cm-246 | 4,760 | 0.31 |
| | | Cm-247 | $1.5\times10^{7}$ | $9.4\times10^{-5}$ |
| | | Cm-248 | $3.5\times10^{5}$ | $4.1\times10^{-3}$ |
| | | Cm-250 | $1.1\times10^{4}$ | 0.13 |
| 97 | Berkelium (Bk) | Bk-247 | 1,400 | 1.0 |
| 98 | Californium (Cf) | Cf-249 | 352 | 4.1 |
| | | Cf-251 | 900 | 1.6 |

facilities. In the United States, DOE generates most TRU; industry produces only small amounts. DOE and industry share responsibility for all activities involving TRU waste except storage and disposal, which are exclusively DOE's responsibility. For instance, DOE stores most TRU waste from the fuel fabrication facilities. Before the 1970s, direct burial in concrete containers was the disposal method used for TRU; however, since 1974 TRU waste has been placed in 20-yr retrievable storage in steel, concrete, or wooden boxes on surface storage pads. No commercial TRU repository is currently available. The Waste Isolation Pilot Plant (WIPP) will be the repository for defense TRU waste only.

Typically, TRU wastes are sealed in plastic bags, which are often placed within cans or other receptacles, and are subsequently placed in sealed, lined drums or boxes identified as waste containers. The dose rate at the surface of a CHTRU waste container, by definition, may not exceed 200 mrem/hr.

### 14.4.2 Low-Level Waste

LLWs are wastes that contain radioactivity and are not classified as a spent nuclear fuel, high-level radioactive waste, or TRU waste. Test specimens of fissionable material irradiated for research and development only, and not for the production of power or plutonium, may be classified as LLW, provided the concentration of TRU is less than 100 nCi/g.

LSA wastes are a special category of LLW. LSA material is defined in 49 CFR 403, as well as in 10 CFR 71, as meaning any one of the following:

- uranium or thorium ores and physical or chemical concentrates of those ores;
- unirradiated natural or depleted uranium or unirradiated natural thorium;
- tritium oxide in aqueous solutions, provided the concentration does not exceed 5.0 mCi/ml;
- material in which the radioactivity is essentially uniformly distributed and in which the estimated average concentration of contents does not exceed
  - 0.0001 mCi per gram of radionuclides for which the $A_2$ quantity is no more than 0.05 Ci,
  - 0.005 mCi per gram of radionuclides for which the $A_2$ quantity is more than 0.05 Ci but no more than 1 Ci, or
  - 0.3 mCi per gram of radionuclides for which the $A_2$ quantity is more than 1 Ci; and
- objects of nonradioactive material externally contaminated with radioactive material, provided that the radioactive material is not readily dispersible and the surface contamination, when averaged over an area of 1 $m^2$, does not exceed 0.0001 mCi/$cm^2$ of radionuclides for which the $A_2$ quantity is no more than 0.05 C, or 0.001 mCi for other radionuclides.

#### 14.4.2.1 Regulations

Before the 1960s, the federal government was responsible for the disposal of LLW from commercial sources at federally owned facilities. In 1963, Congress allowed the development of privately operated disposal sites to accommodate the increasing volumes of wastes from commercial operations. However, in the mid-1970s many of these commercial sites were either closed or their operations were curtailed. In some cases, poor management and lack of regulatory

guidance were cited. In other instances, the sites were found to be geologically and environmentally unsuitable for containing the wastes.

Proper disposal of LLW has become a critical issue, and in 1981 NRC developed new requirements for LLW management. Earlier, in 1980, Congress enacted the Low-Level Radioactive Waste Policy Act (Public Law 96-573). This act designated the individual states as the responsible level of government for LLW management and encouraged the development of regional compacts to implement this policy and to establish regional LLW disposal facilities. The act also provides that after January 1, 1986, compacts approved by Congress could restrict the use of these facilities to the disposal of LLW generated within the compact region.

The principal regulations for disposal of LLW in the United States are administered by EPA and NRC.

#### 14.4.2.2 Waste Classification

NRC has established regulatory requirements in 10 CFR 61 for the disposal of LLW. This regulation is based on a classification system and a set of corresponding waste-form-acceptance criteria for licensed commercial facilities. This system is based on concentration limits (expressed in curies per cubic meter or microcuries per cubic centimeter) and establishes three categories of waste.

- Class A—Consists primarily of shorter-lived isotopes and limited concentrations of longer-lived isotopes. Wastes can be disposed of with only minimum requirements for waste form and characteristics.

- Class B—Increased concentration limits for certain isotopes and additional requirements for waste form and characteristics to ensure physical stability after disposal.

- Class C—Greater concentration and stability requirements for physical form, packaging, and characteristics than Class B.

Radioactive wastes with concentrations exceeding Class C values are not acceptable for disposal at commercial facilities without specific approval by NRC.

The minimum waste packaging acceptance criteria in 10 CFR 61 place the following restrictions on all classes of waste.

- Cardboard or fiberboard boxes may not be used for packaging.

- Liquids must either be solidified or packed with materials capable of absorbing twice the liquid volume.

- Wastes must contain less than 1% of the volume as free liquid.
- Wastes must not be capable of detonation, explosive decomposition or reaction, or reacting explosively with water.
- Wastes must not contain or generate toxic or harmful gases, vapors, or fumes.
- Wastes must not be pyrophoric.
- Gaseous wastes must have less than 100 Ci per container and not exceed 1.5 atm at 20°C.
- Hazardous, biological, pathogenic, or infectious waste material must be extracted to minimize nonradiological hazard.

Class B and C wastes must meet additional stability requirements: (1) The waste must remain in a stable and recognizable form or container for 300 yr; (2) Waste packages must contain less than 1% freestanding water in containers designed to ensure stability; and (3) Less than 0.5% of the package volume can be freestanding water for solidified waste.

### 14.4.3 RCRA Waste

Waste classified as hazardous under RCRA must meet two criteria. The first criterion applied is whether the material is a solid waste, and the second criterion is determining whether the solid waste is hazardous. Solid waste includes any liquids, solids, semisolids, or contained gas that is discarded or stored prior to discarding (40 CFR 261.2). Frequently, this determination involves chemical sampling and analysis to distinguish specific waste components. Once a material is determined to be a solid waste, there are two general methods for determining whether the solid waste is hazardous. First, waste is hazardous if it exhibits one of the following four hazard characteristics: ignitability, reactivity, corrosivity, and extraction-procedure toxicity as defined in 40 CFR 261. Second, waste is hazardous if it appears on one of the lists of hazardous waste in the following regulations:

- nonspecific-source hazardous wastes (40 CFR 261.31),
- specific-source hazardous wastes (40 CFR 261.32),
- acutely hazardous wastes [40 CFR 261.33(e)], or
- generally hazardous wastes [40 CFR 261.33(f)].

A chemical substance that appears on any of the lists or meets any one of the definitions must be handled as a hazardous waste.

Hazardous waste regulations also address the issue of mixing hazardous wastes with nonhazardous or solid wastes. The amount of hazardous waste is defined in the regulations to include the total amount of mixture of hazardous waste with solid waste, regardless of the resulting concentrations of hazardous waste. For example, 1 gal (3.8 l) of spent hazardous solvent mixed with a holding tank of 1,000 gal (3,880 l) of nonhazardous water results in 1,001 gal (3,884 l) of hazardous waste. The mixture rule is contained in 40 CFR 261.3(b)(2).

### 14.4.4 TSCA Waste

A waste is classified under TSCA if it is an imminently hazardous chemical substance or mixture, with respect to which the Administrator of EPA has taken action pursuant to Section 7 of TSCA (i.e., EPA finds that a chemical substance may present an unreasonable risk to health or the environment and that there are insufficient data to predict the effect of the substance). Some characteristics of substances may include persistence, acute toxicity, or carcinogenic effects. Priority is given to substances known to cause or contribute to cancer, gene mutations, or birth defects. Such priority substances are listed by EPA, and the list is revised and updated as needed. The list currently contains PCBs, fully halogenated chlorofluoroalkanes, asbestos, and dibenzo-para-dioxins/bibenzofurans.

TSCA also regulates the labeling and disposal of PCBs and prohibits their production and distribution after July 1979.

The final special waste entry is asbestos. While it is regulated under the CAA, CWA, TSCA, OSHA, and Superfund Act, it is not a RCRA hazardous waste.

### 14.4.5 Radioactive Mixed Waste

Simply stated, radioactive mixed waste is waste that contains both radioactive and hazardous components. The radioactive component refers only to the actual radionuclides dispersed or suspended in the waste substance and is regulated by the Atomic Energy Act (AEA), as amended. The nonradioactive hazardous component is regulated by RCRA. Radioactive mixed-waste generators and regulators realize that these wastes pose unique disposal problems; however, packaging and transportation of these wastes is defined in existing DOT hazardous material regulations. Radioactive mixed wastes should be correctly identified and classed for shipment for their ultimate disposal.

### 14.4.6 Nonregulated Wastes

A number of special wastes and waste generators are excluded from RCRA requirements. They may be covered under other environmental laws and regulations. The regulation that lists the exclusions, 40 CFR 261.4, has 4 major exclusion categories with 18 specific listings under them. The four major exclusion categories are (1) materials that are not solid wastes, (2) solid wastes that are not hazardous wastes, (3) hazardous wastes that are exempted from certain regulations, and (4) laboratory samples. The primary exclusion subcategories include

- domestic sewage;
- irrigation return flows;
- special nuclear or nuclear by-product material as defined by AEA;
- mining overburden returned to the site;
- cement-kiln dust waste;
- fly ash, bottom ash waste, slag waste, and flue-gas emission-control waste from fossil fuel combustion; and
- drilling wastes in oil, gas, and geothermal exploration.

A number of special wastes also deserve mention and are covered in other sections of this handbook. The first is waste oils that are covered under the Used Oil Recycling Act of 1980 and the 1984 RCRA amendments. The EPA's proposed rule of March 10, 1986, regulates waste oils except those that are recycled. PCBs are regulated under TSCA in 40 CFR 760 and, therefore, are preempted from regulation under RCRA.

Recycled waste is either partially regulated or not regulated. EPA asserts that some recycled materials are solid waste and that those come under the regulations. Other recycled materials are not solid wastes and, subsequently, are exempt from RCRA. In addition, each state with an authorized hazardous-waste program may add its own interpretation of what constitutes recycling. Generally, EPA deems that recycling is a preferred management method and places fewer regulatory controls on recycling than on other methods. The following Federal Register citations provide a complete discussion of the reasoning of the federal recycling regulations for hazardous waste: 50 FR 614, January 4, 1985, and 50 FR 49164, November 19, 1985. The codified regulations can be found in 40 CFR 266.

## 14.5 Waste Generated During CERCLA Activities

Section 101(14) of CERCLA defines substances that are considered hazardous, as follows:

- any substance designated pursuant to Section 311(b)(2)(a) of the Federal Water Pollution Control Act (CWA);
- any element, compound, mixture, solution, or substance designated pursuant to Section 102 of CERCLA (reportable quantities);
- any hazardous waste possessing the characteristics identified under or listed pursuant to Section 3001 of the Solid Waste Disposal Act (except those wastes for which regulation has been suspended by Act of Congress);

- any toxic pollutant listed under Section 307(a) of CWA;
- any hazardous pollutant listed under Section 112 of CAA; and
- any imminently hazardous chemical substance or mixture with respect to which the Administrator of EPA has taken action pursuant to Section 7 of TSCA.

Petroleum (including crude oil or any fraction that is not otherwise specified in the above list of substances), natural gas, natural gas liquids, liquified natural gas, or synthetic gas usable for fuel are not hazardous substances regulated by CERCLA.

## 14.6 Expert System for Hazardous Materials Transportation Packaging

Artificial intelligence is a growing field that is making slow but steady progress in various engineering applications. Engineers are directly involved in using artificial intelligence to develop expert systems that will model a wide variety of process systems. Correctly applied, artificial intelligence techniques allow the development of an expert system that is capable of representing and manipulating expert knowledge at the same level as a human expert. An expert system emulates human expertise by applying the techniques of logical inference to a knowledge base. Thus, an expert system contains three components, including (1) a knowledge base that contains all the available information about a specific problem, (2) an inference mechanism that normally performs reasoning by referring to a set of rules for using that knowledge to resolve a given situation, and (3) a user interface that accesses the necessary information.

The ability of the computer to simulate situations and make decisions as a subject-matter expert has greatly increased potential applications. With this type of computing power available in increasingly easy-to-use forms (through object-oriented programming and hypermedia), the development of an expert system based on hazardous materials regulations is possible.

One limitation that has precluded the development of such a system for hazardous material transportation is the database that is needed to support it (i.e., the regulations have not been available in a machine-usable format). Now that the hazardous materials regulations are commercially available in personal computer (PC)-compatible formats, the door to developing such a system has been opened. It may be possible to develop a system that can take initial input (e.g., characteristics of the material being shipped) and provide the user with the information necessary to expedite the following decisions:

- making a packaging selection;
- guiding the loading of the packaging for shipment;
- preparing the shipping papers or hazardous waste manifest by providing such information as shipping name, hazard class, packaging group, and

whether the material constitutes a reportable quantity or an inhalation poison;

- identifying further restrictions, such as prohibitions of shipping on a passenger aircraft; and
- providing additional hazard communication information, such as proper marking and labeling for the package and placarding for the transport vehicle.

Ultimately, it could be possible to generate all the shipping paperwork this way. The expert system would ensure that even the most obscure details of making unusual shipments are readily available to all users, thus emulating an expert quite effectively and significantly reducing the likelihood for human error. Broad capability systems [e.g., Automated Transportation Management Systems (ATMS)] as well as PCs could be used to provide access to the system.

Under the sponsorship of the DOE Office of Environmental Restoration and Waste Management, the Transportation Technologies Group of the Engineering Coordination and Analysis Section, which is part of the Chemical Technology Division at ORNL, investigated the design and development of a computerized prototype application of radioactive and hazardous materials transportation regulations. The task entailed the analysis of what an expert in radioactive and hazardous materials shipping information could/should do. In addition, the analysis determined the status of commercially available computer software that performs similar functions. This information, in conjunction with existing computer tools, was used to determine the requirements for producing the expert system and served as the basis for developing preliminary prototype modules of the system.

The first phase of demonstrating the feasibility of developing an expert system prototype produced interesting results. Knowledge concerning radioactive material transportation packaging was represented by means of a logic diagram that was translated into a rule-based system (Ferrada 1993). The second phase of demonstration includes the feasibility analysis of a prototype expert system for hazardous chemical packaging. The possibility of developing an expert system for the packaging of hazardous chemical materials that may be linked to the expert system for radioactive material transportation packaging was analyzed with promising results (Ferrada 1992).

The final version of the expert system will be implemented in the computer system, which allows a better and less expensive distribution to the final users. The first prototype module was finalized and incorporates the expertise for transportation and packaging of radioactive materials. The system developed here promises to help transportation management not only with routine daily packaging duties but, more importantly, with those unusual cases in which more regulatory information is required to stay in compliance.

## 14.7 Conclusion

This chapter demonstrates that packaging and transportation of hazardous materials is a complex issue. The agencies that regulate the transportation of hazardous materials are identified, as are the regulations that have been established to protect the worker, the public, and the environment. The various types of waste that may be encountered or generated at a decommissioning site are also identified and defined.

## 14.8 References

Corbitt, R. A. 1990. *Standard Handbook of Environmental Engineering*. McGraw Hill Publishing Company. New York. 1990.

Ferrada, J. J., V. M. Green, and R. R. Rawl. 1992. "Feasibility Study–Computerized Application of the Hazardous Material Regulations" ORNL/TM 12141.

Ferrada, J. J., D. M. Vadell, and E. R. Thager. 1993. "Development of an Expert System Using Hypermedia Features." Presented at the AICHE meeting, Houston, Texas.

McCall, D. L., and T. W. Calahan, III, "Is Radioactive Mixed Waste Packaging and Transportation Really a Problem?" Waste Management 92, March 1 to 5, 1992.

# 15.0 DECOMMISSIONING COST ESTIMATES AND SCHEDULE

A decommissioning cost estimate should indicate the cost required to complete the project. Incremental funding will be based upon the preliminary cost estimate, and a budget will be prepared from the cost estimate figures as projected over time, in a project schedule. The cost estimate is also one of the tools whereby different alternatives or scenarios can be evaluated and compared. Accurate cost estimates are essential to a project's success.

This chapter discusses the recommended cost estimating methodology, describes the cost estimating process, and provides information about the component parts of the estimate. It also discusses a methodology for schedule development and the integration of schedules with cost estimating to develop resource requirements.

The decommissioning cost estimate and schedule are not stand-alone documents. They constitute a tool that, when merged with the planning stages of a project, can assist in the overall project organization and can illustrate cost savings and benefits. An accurate cost estimate and schedule provide the ability to track costs and project trends.

## 15.1 Introduction

Reliable cost estimating is one of the most important elements of decommissioning planning. Just as possible technologies are evaluated and compared based on their efficiency and effectiveness, their costs must also be considered throughout the planning process. When the plan is complete, those thorough cost considerations ensure that it is economically sound and practical for funding.

Estimates of decommissioning costs have been performed and published by many organizations. The results of an estimate can differ because of different work scopes, different labor force costs, different money values because of inflation, different oversight costs, the specific contaminated materials involved, the waste stream and peripheral costs associated with that type of waste, or the applicable environmental compliance requirements. Some of the divergences in costs, however, cannot be easily explained; this lack of consistency prohibits direct estimating by measuring standard quantities such as initial capital cost, nuclear products generated, square footage of facilities, or volumes of waste streams. At some point, it may be possible to multiply one or more of these measurements by some predetermined number to arrive at a cost estimate, but until such a system is proven to be highly reliable, a reasonable degree of reliability and accuracy can only be achieved by developing decommissioning cost estimates on a case-by-case basis.

## 15.2 Methodology

The first step in preparing a decommissioning cost estimate should be to gather all the facility's as-built drawings, construction records, and purchase and installation records for equipment and materials. Some projects have accumulated much of the information pertinent to the

decommissioning task into a single source document (e.g., System Turnover Packages or a Technical Data Summary document). This information provides a preliminary framework for developing an inventory of the materials to be handled in the decommissioning project. This inventory will be useful for developing the comprehensive cost estimate (i.e., total project cost). Total project cost includes the following three components:

- primary cost—activity-dependent and period-dependent costs associated with the physical decommissioning of a facility (direct and indirect construction costs);
- peripheral cost—auxiliary function costs associated with decommissioning activities (such as design, engineering, regulatory interfaces, and oversight costs); and
- waste stream cost—both on-site and off-site waste disposition costs.

These components are illustrated in Figure 15.1.

The accuracy of total project cost estimates depends on the availability of specific information about the decommissioning activities to be performed. Specific information may come from the planning or engineering of the project itself or may come from historical information about other similar decommissioning projects. The cost estimating process may be requested at any stage in the planning, engineering, or design of the project; at earlier stages, design information may not be readily available. Contingency is applied to the cost estimate based on uncertainties associated with the available design information. Contingency is usually applied to discrete elements of a project, as a percentage, and the contingency for the total project cost is the weighted average of these percentages.

Figure 15.2 illustrates the general approach for calculating a total project cost for decommissioning. For each of the three component costs, the estimate must include all known costs and the identified cost factors for unknowns, a contingency based on the level of design information available, overhead, and fee. This provides a cost in current-day dollars for each incremental task. Each of these tasks is then merged with the proposed schedule information so that cost can be escalated over the proposed schedule duration (costs increase over time).

It is best to include as few unknowns as possible in a cost estimate because as criteria, methods, or peripheral parameters change during the evolution of the project, adjustments can be made more easily and accurately if the original cost figures are based upon known data.

### 15.2.1 Primary Cost

Primary costs can be estimated in a number of ways. Recorded experience from other decommissioning projects, estimating handbooks, and equipment catalog performance data, among other sources, may be used to develop cost data. The techniques used for preparing cost

level of detail, where possible, so that the estimate for a discrete activity can apply to all occurrences of the activity. Figure 15.3 illustrates an example of the building block approach.

Some factors that may affect primary cost calculations include setup time, operating time, required crew size, consumables usage, support services, and energy consumption.

### 15.2.2 Peripheral Cost

Peripheral costs are those that are ancillary to the actual decommissioning activities, such as engineering, oversight, or regulatory interaction. These activities are mandated by regulatory requirements, site-specific or company-specific procedures, or funding and time protraction requirements. This, in addition to federal or state regulatory compliance or company-specific procedural cost requirements, may necessitate certain preactivity and postactivity engineering and oversight costs. As projects protract into the future, costs rise, so cost estimates must be sensitive to all possible schedule idiosyncrasies.

### 15.2.3 Waste Stream Cost

Because decommissioning involves the handling of some contaminated materials or equipment, some waste streams will be contaminated. However, decommissioning projects generate different wastes, and these affect the costs differently for each project. Because of changing regulatory requirements, waste facility requirements, and changing DOT regulations, waste stream costs include both on-site costs (laydown area, interim storage, processing costs to reach ALARA, volume reduction, packaging, and transportation) and off-site disposal costs (special and specific packaging/labeling, transportation, loading and unloading, final burial fee, and surcharges), all of which are principally dependent on the characteristics of that waste. Therefore, identification of the character of waste streams is imperative to reliable cost estimating.

## 15.3 Cost Estimating Process

Preparation of a decommissioning cost estimate consists of the following steps.

1. Review the scope of the work, placing specific emphasis on projected waste stream characteristics (contaminated material), documented regulatory references and applicability, and site-specific or company-specific procedures pertaining to the project.

2. Develop a building block approach to establish the total project structure cost breakdown. Establish the upper-level requirements and/or specifics for the client/agency funding the project.

3. Prepare a detailed description of the decommissioning project in a logical, time-related sequence of series and parallel work activities, breaking it down into primary cost, peripheral cost, and waste stream cost. Once the

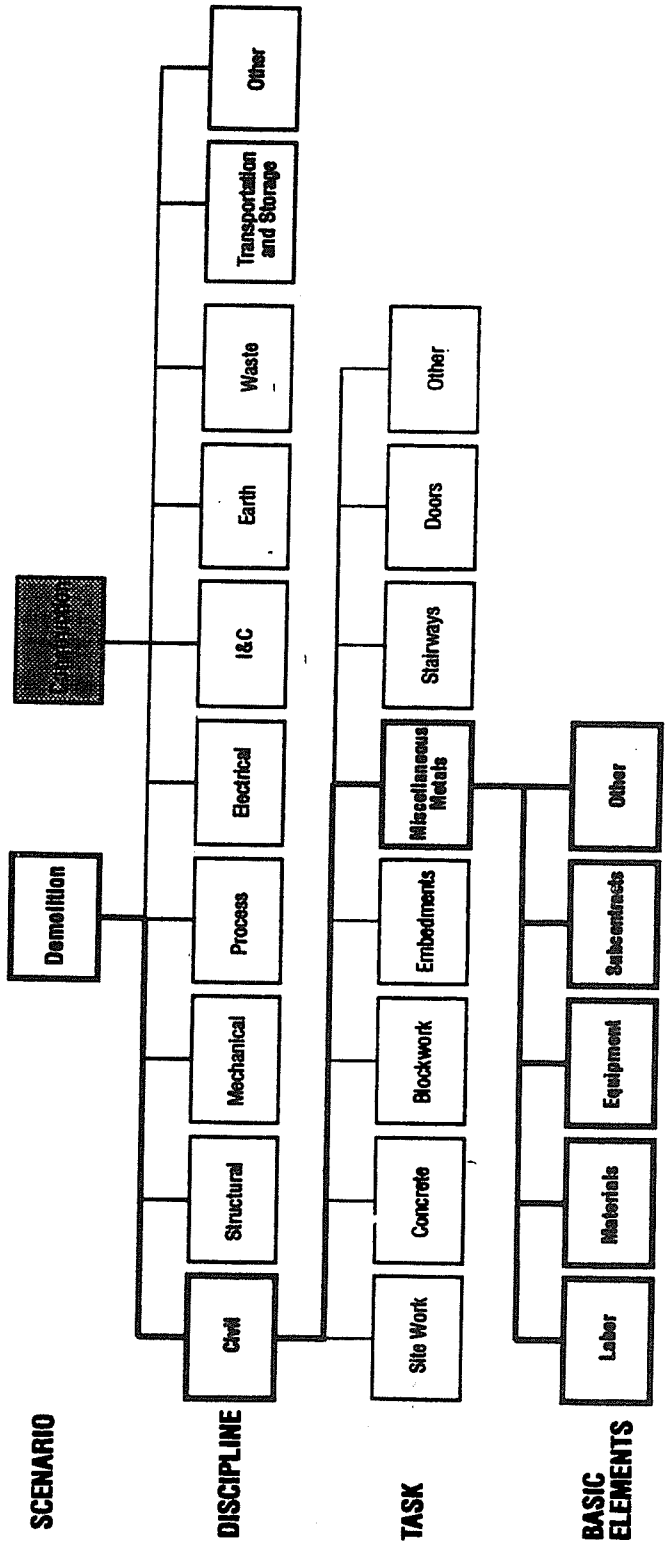


**Figure 15.3. Cost estimating building block structure**

**Pump Removal to Salvage (25–125 HP)**

- Assume no contamination.
- Crew to remove pump.
- Crane to lift pump and place on flatbed truck.
- Flatbed driver delivers pump to laydown area for salvage.
- Pump is unloaded at laydown area.

| Expense | Time (hr) |
|---|---|
| Pipefitter | 6.0 |
| Pipefitter foreman | 1.5 |
| General pipefitter foreman | 0.50 |
| Crane (equipment) | 1.0 |
| Crane operator | 1.0 |
| Flatbed truck | 1.0 (distance assumed) |
| Truck driver | 1.0 |
| **Total Hours** | **12.00** |

---

**Pump Removal to Disposal (25–125 HP)**

- Assume no contamination.
- Crew to remove pump.
- Crane to lift pump and place on flatbed truck.
- Flatbed driver delivers pump to disposal site.
- Pump is unloaded at disposal site.

| Expense | Time (hr) |
|---|---|
| Ironworker | 2.0 |
| Laborer | 3.0 |
| Ironworker foreman | 0.50 |
| Laborer foreman | 0.75 |
| Crane (equipment) | 1.0 |
| Crane operator | 1.0 |
| Flatbed truck | 1.0 (distance assumed) |
| Truck driver | 1.0 |
| **Total Hours** | **10.25** |

Note: In areas utilizing national labor agreements, those materials designated salvageable utilize craft from that discipline. For example, pipe and piping equipment being salvaged, such as pumps, would be removed by pipefitters. Materials not salvageable utilize demolition crew mixes (typically ironworkers and laborers).

**Figure 15.4. Typical estimate breakdown of crew mix and equipment**

The costs of all period-dependent items are calculated by multiplying each cost factor by its corresponding assigned period; however, some costs that should be captured in the details of an estimate may be insignificant to the cost of a project (typically less than 1%) and should have a dollar amount assigned to that activity based on prior experience. These assigned or "plugged" numbers are typically given to the costs for utilities (electric, water, gas, and air) required during the performance period of the decommissioning.

The basic elements of primary cost for any task or subtask in a decommissioning project work sequence include the following:

- labor,
- materials consumed,
- equipment,
- subcontracts, and
- other (energy, overhead, and fee).

The following sections describe each of these elements in detail.

### 15.3.4.1 Labor Costs

Decommissioning is a labor-intensive activity. Therefore, labor cost data must be carefully selected and applied. All the relevant factors, such as overtime and per diem expenses, must be included and clearly stated.

Since most decommissioning activities require work crews from several different crafts, it is convenient to express labor costs in terms of crew cost per hour, rather than listing the craft labor rates individually. This approach simplifies cost estimation since the same crew mix may be utilized for several types of activities, depending on the specific labor criteria for the project site.

The cost of labor is determined by multiplying the hourly crew cost by the number of hours the crew is utilized. Often, calculations are based on an 8-hr day and a 5-day workweek. However, anticipated (scheduled) overtime will require appropriate adjustments to the labor costs, and shift work may also necessitate a rate differential.

One special consideration for calculating labor rates in decommissioning is the handling of radioactive or hazardous materials. If the crew handles radioactive or hazardous materials, provision must be made for the time required to don and doff anticontamination clothing and for the additional time needed to perform manual functions while encumbered by gloves, masks, and protective clothing. Provision should also be made for the time spent for containment (wrapping contaminated material in plastic or "fixing" the contamination with a coating). The time needed

to carry out the required radiological surveys of personnel and equipment must also be taken into account. A engineering block flow diagram showing one method of treating large pipes and valves is given in Figure 15.5. It illustrates how radioactive or hazardous materials can impact the cost of the handling process. When dealing with known noncontaminated materials, the engineering block flow diagram may be reduced as shown in Figure 15.6.

All the labor rates used to calculate crew costs should include fringe benefits (i.e., wage rate + fringe benefits = base labor rate). Labor rates for most crafts may be obtained from guides such as *Building Construction Cost Data* by the Robert Snow Means Company, the *Dodge Guide* by McGraw-Hill, and the U.S. Bureau of Labor Statistics publication entitled *Employment and Earnings*. The labor rates given in *Building Construction Cost Data* and *Dodge Guide* include wages and fringe benefits. The labor rates in *Employment and Earnings* are "base earnings" and do not include fringe benefits.

If a particular craft cannot be found in the listed references, reasonable approximations can be made. For example, jackhammer operators and air compressor operators can be considered to be light equipment operators.

The labor costs shown in Table 15.1 are city cost indexes. Decommissioning cost estimates for a specific site must be based on regional labor rates. *Building Construction Cost Data* and *Dodge Guide* provide, in addition to national average labor rates, either regional labor rates or regional labor rate indexes.

In some cases, a per diem rate may have to be paid to work crews brought in from outside the immediate community. This cost must also be added to labor costs. Per diem expenses vary, so the appropriate local rate should be determined.

#### 15.3.4.2 Material Costs

Some decommissioning activities require various amounts of consumable materials, such as chemicals, explosives, torches and cutting gas, saw blades, and disposable items like protective packaging and small tools. For example, the task of cutting pipe into lengths suitable for disposal could require power hacksaws and torches, replacement saw blades, torch gas supplies, torch tips, etc. The quantities of materials required can be estimated from the size and length of piping to be removed.

Sources of information on the cost of materials include *Producer Prices and Price Indexes Data* by the U.S. Bureau of Labor Statistics, *Building Construction Cost Data* (Robert Snow Means Company), *Dodge Guide* (McGraw-Hill), and *Building and Construction Estimating Standards* by Richardson Engineering Services.

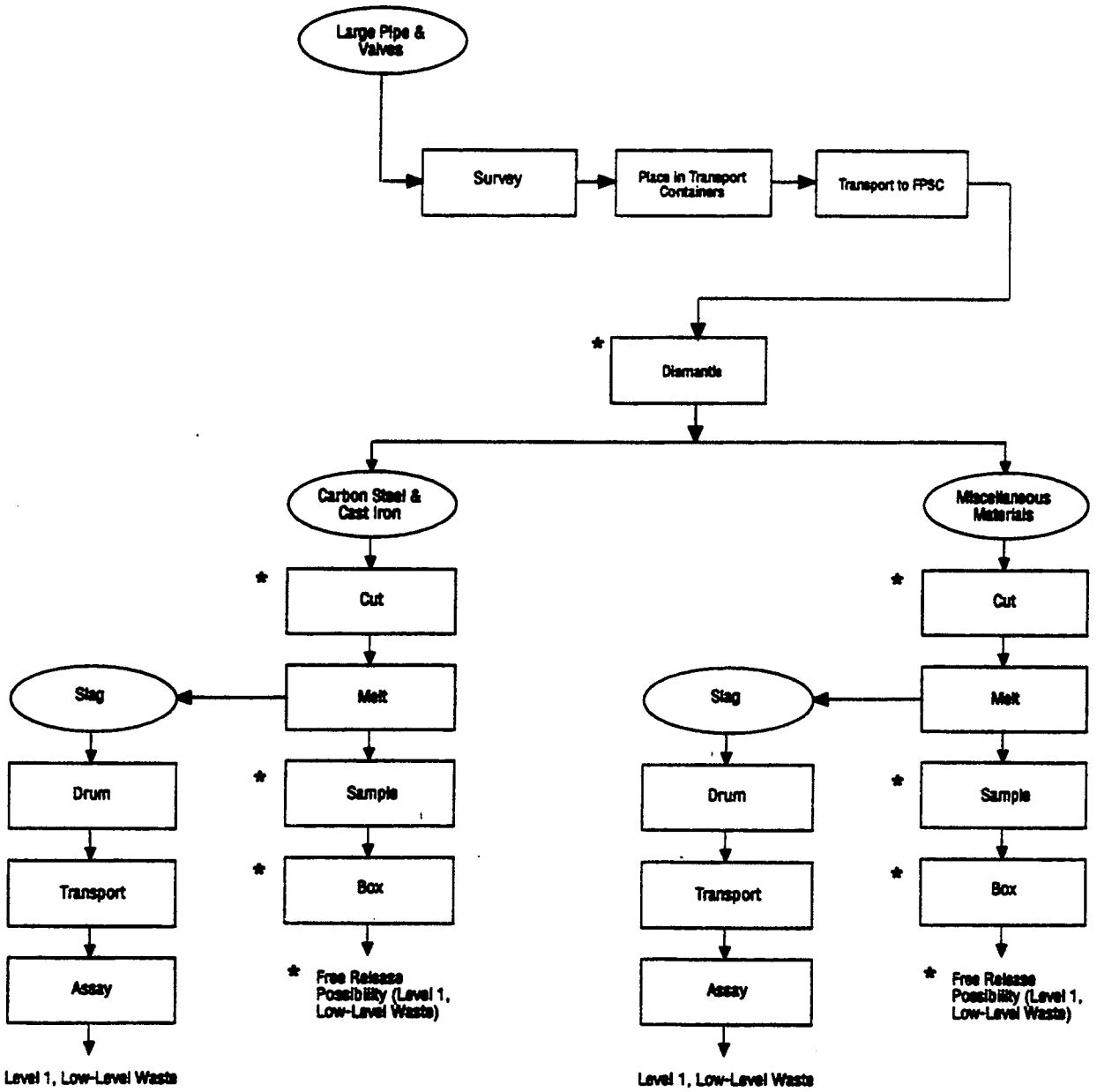


* Designates steps involved with noncontaminated materials.

**Figure 15.5. Sample engineering block flow diagram (contaminated materials)**

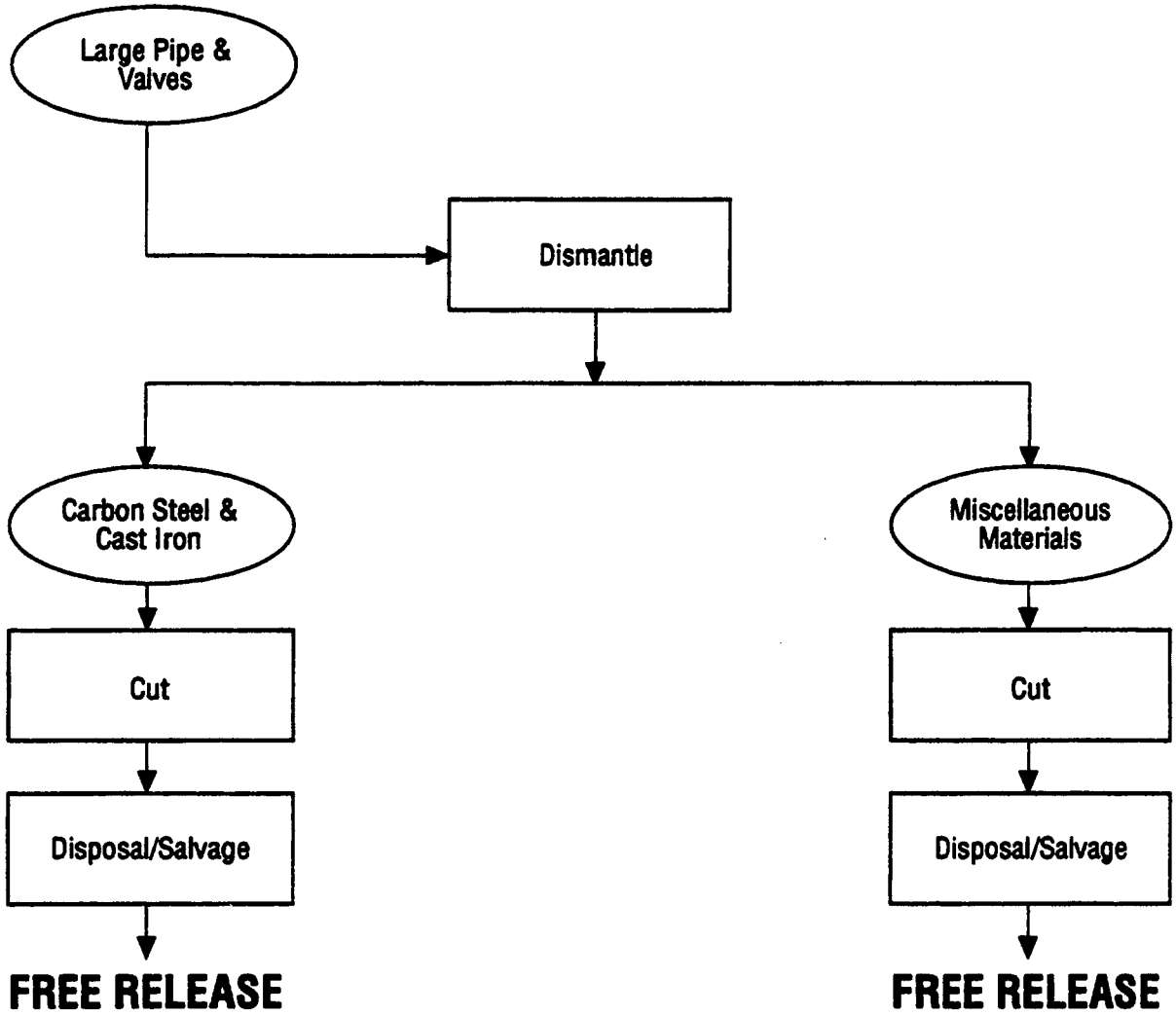


**Figure 15.6. Sample engineering block flow diagram (noncontaminated materials)**

### 15.3.4.4 Subcontracts

The decommissioning planner may rely on subcontractors to perform a portion or all the contracted work on a given project. Typical work performed by subcontractors includes the following:

- specialized equipment and materials tasks,
- site security,
- asbestos removal,
- waste packaging and waste handling, and
- others.

In the event subcontractors are used, cost is incurred by the decommissioning planner for contract management, field and home office engineering, scheduling, and other support tasks. These costs are usually handled by adding a markup of 5–12% to the subcontractor's contract price, based on anticipated management needs.

### 15.3.4.5 Other

In decommissioning programs where the owner of the facility performs some or all of the activities, administrative overhead is often charged to the project. The overhead charge usually encompasses administrative salaries, employee benefits (e.g., workers' compensation, federal and state unemployment costs, and social security taxes), vehicles, buildings, office equipment, supplies, and utility costs. Contractors' overhead percentages can vary greatly. The contributing costs can be estimated for a year and then converted to a percentage of the total annual business.

When decommissioning work is carried out by a contractor, the estimator should include the contractor's overhead plus its fee. *Building Construction Cost Data* and *Building Construction Estimating Standards* provide guidelines for overhead and fee percentage based on the contractor's average annual business volume and the firmness of the bidding price. An allowance must be added to provide for the contractor's overhead and fee.

The sources of energy for a decommissioning project may include electricity, fuel oil, natural gas, gasoline, water, and diesel fuel. For activities that consume large amounts of energy, such as evaporation of water during liquid waste treatment, specific estimates should be made. For activities such as small tool operation, the energy consumption is small, and it is convenient to estimate the energy costs as an allowance in the base energy cost.

Specific estimates should be made for the operation of plant support equipment. The following is a suggested list of equipment to be considered when estimating the operating electrical loads during decommissioning:

- air compressors,
- heating,
- air conditioning,
- overhead cranes,
- service water pumps,
- segmenting and decontamination equipment,
- fill pumps or recharging pumps,
- lighting,
- ventilation,
- battery chargers,
- sump pumps,
- evaporators, and
- water purification and recirculation pumps.

To calculate energy consumption, the total operating time of the equipment is estimated and multiplied by the kilowatt-rating of the equipment. To calculate total energy costs, multiply the total kilowatt-hour consumption by the electrical billing rate.

In calculating the energy cost of evaporating wastewater, the total volume of water to be evaporated must be estimated. The energy required to evaporate that volume of water is determined in kilowatt-hours or British thermal units, and the total energy requirement is multiplied by the electrical billing rate or the cost of the fuel used.

Energy costs vary regionally. Fuel oil and electrical rate variations are given in Table 15.2. Data on regional and national average costs for fuel oil, gasoline, diesel fuel, and electricity are also given in *Producer Prices and Price Indexes Data* by the U.S. Bureau of Labor Statistics.

**Table 15.2. Fuel Oil and Electrical Rate Variations***

| State | #2 Fuel Oil Cost Index | Industrial Electrical Power Cost Index |
|---|---|---|
| California | Not available | 139.5 |
| Colorado | Not available | 88.11 |
| Georgia | Not available | 97.12 |
| Illinois | 104.97 | 112.90 |
| New York | 100.00 | 144.48 |
| Ohio | 94.45 | 90.57 |
| Tennessee | Not available | 77.02 |
| Texas | Not available | 90.22 |
| Vermont | 108.53 | 127.45 |
| Washington | 94.31 | 50.17 |

*National average = 100

### 15.3.5 Peripheral Cost Factors

Peripheral costs include all planning and engineering tasks, such as performing radiation surveys, calculating activation and contamination inventories, performing engineering studies, preparing a decommissioning plan, preparing major activity specifications and descriptions, designing special tools, and preparing detailed decommissioning procedures. Also included are all engineering oversight tasks, such as ensuring regulatory compliance (including preparation of permit applications), assisting in negotiations, reviewing overall project plans, reviewing the project process to ensure concurrence with federal and state regulations, ensuring that the selected technologies comply with administrative and regulatory requirements, and attending project status meetings.

Peripheral costs are based on regulations and site-specific and project-specific procedures and the characteristics of the waste streams generated by decommissioning activities. These waste streams will involve some federal, state, or local regulatory compliance activities that add to the overall cost of the decommissioning project.

### 15.3.6 Waste Stream Cost

The areas of waste stream generation for a decommissioning project include the following:

- the material being dismantled,
- waste containers,
- the medium used (and its by-products) to decontaminate the material being dismantled, and
- the PPE used by the workers.

In the cost estimate, waste stream disposition can be on-site and off-site specific. The major decommissioning waste stream costs to consider are as follows:

- handling (loading and unloading),
- decontamination processing for waste minimization,
- volume reduction,
- packaging and containment (drums, tanks, boxes, etc.),
- characterization of the waste,
- shipping and transportation regulations,
- burial, and
- fees and surcharges.

These are described in the following section.

#### 15.3.6.1 Handling (Loading and Unloading)

An operation to load a relatively small amount of waste in a day may consist of a 15-ton crane truck with an operator and a laborer loading B-25 boxes onto the truck. A large volume operation may require a large crane and a staging area to handle loading (e.g., loading sea-land containers onto railroad cars). Remote handling or extraordinary precautions may dictate additional costing (other than the simple techniques of drumming, boxing, palletizing, or freighting) depending on the specific nature of the waste.

### 15.3.6.2 Decontamination Processing

It may be cost-effective to reduce the level of contamination in the waste before it is disposed of. This could allow the waste to be disposed of in a less restrictive facility (e.g., an LLW facility instead of mixed-waste facility or a sanitary landfill instead of an LLW facility). If decontamination processing were sufficiently thorough, contaminated materials could be released for recycle to achieve the goal of waste minimization.

### 15.3.6.3 Volume Reduction

It is more cost-effective to dispose of smaller volumes of waste. Waste streams such as PPE can be compacted to reduce the total volume of waste disposed of. Liquid/solid separation by thermal drying or belt filter press can reduce the volume of waste containing liquids, or bulky wastes such as piping or miscellaneous metals can be shredded or cut into small pieces for packaging.

### 15.3.6.4 Packaging and Containment

LSA radioactive waste materials from a decommissioned facility are packaged in sturdy, tight containers (wooden or metal boxes) and shipped to a licensed burial site. The waste is buried in the disposable containers. The containers are considered a unit cost activity, directly proportional to waste volumes and weight limitations.

Type B and large-quantity radioactive waste from a decommissioned facility is packaged in steel-and-lead liners and shipped to a licensed burial site in special casks. At the burial site, the loaded materials and liners are removed from the casks and buried; the casks are then returned for reuse. Because the liners are disposed of, liner costs are fixed. Cask costs, since the casks are reused, are period-dependent costs.

The cost of shipping casks varies with the quantity and type of shielding used. For example, a 50-$ft^3$ (internal volume) cylindrical cask will cost from $20,000 to $50,000, depending on the degree of shielding. The low end of the shielding range is a 1-in.-thick steel liner, and the high end is 4 in. of lead plus a steel liner jacket. These costs can be fixed, period-dependent costs (depending on reusability of the package) or can be activity dependent (depending on methodology).

### 15.3.6.5 Characterization of the Waste

Before a waste can be shipped for disposal, the shipper has to demonstrate that it meets the acceptance criteria of the intended recipient. This may include sampling and radiological and/or chemical analysis or in situ measurements such as RTR (see Chapter 7). Costs for this activity have to be included.

### 15.3.6.6 Shipping and Transportation Regulations

For the shipment of nonradioactive material, regular shipping rates will apply; special rates apply for radioactive material. Material may be shipped by barges, but large shipments are limited by the accessibility of navigable waterways. Motor freight and rail shipping rates may be readily obtained from carriers.

Motor freight is convenient, but weight is limited. Generally, without special permits, truck gross vehicle weight may not exceed 80,000 lb (approximately 40,000 lb of which is attributed to the vehicle). The weight of casks and liners will significantly reduce the amount of payload that can be shipped, resulting in additional shipping costs.

Railcars and contents are limited to approximately 263,000 lb. Weights above this limit would require specialized railcars. Rail service may not be available at a decommissioning site, and it may be necessary to use specially designed multiaxle road transporters to haul material to the nearest rail loading point. In this case, additional cost would be incurred and must be accounted for in the cost estimate.

Distance and weight are not the only cost figures to consider in shipping. Given the potential for changing DOT regulations, one should be aware that shipping costs can vary greatly based on the type of waste, regardless of the weight. Shipping costs are activity dependent and are fixed by the quantity and type of waste disposed of.

### 15.3.6.7 Burial

DOE operates facilities for the disposal of their wastes at Hanford, Washington, and Beatty, Nevada. In addition, there are licensed, radioactive waste disposal companies operating burial sites in the United States Burial costs for radioactive material are dependent on weight, curie content, specific isotopic characteristics, and surface radiation (rem/hr). These costs are activity dependent and are determined by the quantity and type of waste disposed of.

Burial facilities are operated by different contractors. For solid materials, sample burial rates are shown in Table 15.3.

### 15.3.6.8 Fees and Surcharges

Additional costs can be incurred at some burial sites as a result of shipment outside the "compact" region and additional on-site handling fees charged because of waste characterization. The Low Level Radioactive Waste Policy Act of 1980, as amended, requires that the states organize into regional "Compacts" to site and operate LLW disposal facilities. Until the time that the compact's disposal facility is opened in response to a Congressionally specified date, generators of LLW may continue to use the existing disposal sites. However, the disposal sites

# Table 15.3. Disposal Sites Cost Data

| ITEM | DESCRIPTION | NEVADA TEST SITE * (BEATTY, NV) | BARNWELL (BARNWELL, SC) | ENVIROCARE ** (CLOVE, UT) | HANFORD (DOE) | RICHLAND FACILITY HANFORD (COMMERCIAL) |
|---|---|---|---|---|---|---|
| DISPOSAL CHARGES | - PACKAGES : | | | | | |
| | ( R / HR @ CONTAINER SURFACE ) | | | | | |
| | 00.00 - 00.20 | | | | | $ 37.70 / CU. FT. |
| | 00.21 - 01.00 | | | | | $ 39.60 / CU. FT. |
| | 01.01 - 02.00 | | | | | $ 41.00 / CU. FT. |
| | 02.01 - 05.00 | | | | | $ 42.60 / CU. FT. |
| | 05.01 - 10.00 | | | | | $ 46.80 / CU. FT. |
| | 10.01 - 20.00 | | | | | $ 55.80 / CU. FT. |
| | 20.01 - 40.00 | | | | | $ 64.50 / CU. FT. |
| | GREATER THAN 40.00 | | | | | $ 70.20 + ( $ 0.567 x R / HR in |
| | | | | | | excess of 40) |
| | | | | | | |
| DISPOSAL CHARGES | - LINERS REMOVED FROM SHIELD ( >12 CU. FT.) | | | | | |
| | SURCHARGE + CUBIC FOOT CHARGE | | | | | |
| | ( R / HR @ CONTAINER SURFACE ) | | | | | |
| | 00.00 - 00.20 | | | | | $ 0.00 + ($ 37.70 / CU. FT.) |
| | 00.21 - 01.00 | | | | | $ 276.60 + ($ 37.70 / CU. FT.) |
| | 01.01 - 02.00 | | | | | $ 622.20 + ($ 37.70 / CU. FT.) |
| | 02.01 - 05.00 | | | | | $ 1, 048.70 + ($ 37.70 / CU. FT.) |
| | 05.01 - 10.00 | | | | | $ 1, 670.90 + ($ 37.70 / CU. FT.) |
| | 10.01 - 20.00 | | | | | $ 2, 189.40 + ($ 37.70 / CU. FT.) |
| | 20.01 - 40.00 | | | | | $ 2, 512.00 + ($ 37.70 / CU. FT.) |
| | GREATER THAN 40.00 | | | | | $ 2, 749.20 + ($ 24.10 x R / HR in |
| | | | | | | excess of 40) |
| | | | | | | |
| | | | | | | |
| DISPOSAL CHARGES | -(INCLUDES : EXTENDED CARE FUND , S.C. | | | | | |
| | LLW DISPOSAL TAX , AND S.E. COMPACT FEE ) | | | | | |
| | - STANDARD WASTE | | $ 59.00 / CU. FT. | | | |
| | - BIOLOGICAL WASTE | | $ 61.00 / CU. FT. | | | |
| | - SPECIAL NUCLEAR MATERIAL (SNM) | | $ 59.00 / CU. FT. | | | |

* - COST DATA EFFECTIVE 1/1/94.

** - COST DATA ARE NOT AVAILABLE AT THIS TIME.

# Table 15.3. Disposal Sites Cost Data (Continued)

| ITEM | DESCRIPTION | NEVADA TEST SITE * (BEATTY, NV) | BARNWELL (BARNWELL, SC) | ENVIROCARE ** (CLOVE, UT) | HANFORD (DOE) | RICHLAND FACILITY HANFORD (COMMERCIAL) |
|---|---|---|---|---|---|---|
| CURIE SURCHARGE - | PER SHIELDED SHIPMENT : | | | | | |
| | ( CURIE CONTENT PER SHIPMENT ) | | | | | |
| | 0 - 5 CURIES | | $ 4, 150 / LOAD | | | $ 0.00 / LOAD |
| | > 5 - 15 CURIES | | $ 4, 710 / LOAD | | | $ 0.00 / LOAD |
| | > 15 - 25 CURIES | | $ 6, 235 / LOAD | | | $ 0.00 / LOAD |
| | > 25 - 50 CURIES | | $ 9, 405 / LOAD | | | $ 0.00 / LOAD |
| | > 50 - 75 CURIES | | $ 11, 460 / LOAD | | | $ 1, 152.30 / LOAD |
| | > 75 - 100 CURIES | | $ 15, 525 / LOAD | | | $ 1, 152.30 / LOAD |
| | > 100 - 150 CURIES | | $ 18, 630 / LOAD | | | $ 2, 304.60 / LOAD |
| | > 150 - 250 CURIES | | $ 24, 955 / LOAD | | | $ 2, 304.60 / LOAD |
| | > 250 - 300 CURIES | | $ 31, 280 / LOAD | | | $ 2, 304.60 / LOAD |
| | > 300 - 500 CURIES | | $ 31, 280 / LOAD | | | $ 2, 880.90 / LOAD |
| | > 500 - 1, 000 CURIES | | $ 37, 375 / LOAD | | | $ 3, 457.10 / LOAD |
| | > 1, 000 | | special request | | | - |
| | > 1, 000 - 5, 000 CURIES | | - | | | $ 4, 033.20 / LOAD |
| | > 5, 000 - 10, 000 CURIES | | - | | | $ 5, 876.90 / LOAD |
| | > 10, 000 - 15, 000 CURIES | | - | | | $ 8, 296.90 / LOAD |
| | GREATER THAN - 15, 000 CURIES | | - | | | $ 9, 403.20 + ($ 0.448 x CURIES |
| | | | | | | in excess of 15, 000 ) |
| | | | | | | |
| CURIE SURCHARGE - | PER NONSHIELDED SHIPMENT CONTAINS | | | | | |
| | TRITIUM AND CARBON 14 : | | | | | |
| | CURIE CONTENT PER SHIPMENT : 0 - 100 | | no surcharge | | | |
| | GREATER THAN 100 | | special request | | | |
| | | | | | | |
| HANDLING FEE - | TRUCK CASKS : | | | | | |
| | a. REMAIN ON TRUCK WHILE UNLOADING | | | | | $ 1, 000.00 / EACH |
| | b. REMOVED FROM TRUCK WHILE UNLOADING | | | | | $ 25, 000.00 / EACH |
| | | | | | | |
| | | | | | | |
| | RAIL CASKS : | | | | | $ 50, 000.00 / EACH + |
| | | | | | | ( OUTSIDE RIGGERS ' CHARGE ) |
| | ALL CASKS ( MINIMUM FEE ) : | | $ 1, 795 / CASK | | | |

* - COST DATA EFFECTIVE 1/1/94.

** - COST DATA ARE NOT AVAILABLE AT THIS TIME.

# Table 15.3. Disposal Sites Cost Data (Continued)

| ITEM | DESCRIPTION | NEVADA TEST SITE * (BEATTY, NV) | BARNWELL (BARNWELL, SC) | ENVIROCARE ** (CLOVE, UT) | HANFORD (DOE) | RICHLAND FACILITY HANFORD (COMMERCIAL) |
|---|---|---|---|---|---|---|
| MINIMUM CHARGE PER SHIPMENT | | | $ 1, 000.00 | | | $ 1, 000.00 |
| | | | | | | |
| POLY HIC'S IN ENGINEERED CONCRETE BARRIERS : | | | | | | |
| | a. LARGE | | | | | $ 9, 520 MINIMUM + ( other |
| | | | | | | applicable costs herein ) |
| | b. SMALL | | | | | $ 8, 325 MINIMUM + ( other |
| | | | | | | applicable costs herein ) |
| | | | | | | |
| SURCHARGE – | HEAVY OBJECTS (NONCASK SHIPMENTS) | | | | | |
| | 0 – 5, 000 POUNDS | | | | | no surcharge |
| | 5, 001 – 10, 000 POUNDS | | | | | $ 500.00 |
| | 10, 001 – 15, 000 POUNDS | | | | | $ 1, 000.00 |
| | 15, 001 – 20, 000 POUNDS | | | | | $ 2, 500.00 |
| | 20, 001 – 25, 000 POUNDS | | | | | $ 5, 000.00 |
| | OVER – 25, 000 POUNDS | | | | | $ 10, 000.00 |
| | | | | | | |
| SURCHARGE – | WEIGHT ( CRANE LOADS ONLY ) : | | | | | |
| | ( WEIGHT OF CONTAINER ) | | | | | |
| | 0 – 1, 000 POUNDS | | no surcharge | | | |
| | 1, 001 – 5, 000 POUNDS | | $ 675 / container | | | |
| | 5, 001 – 10, 000 POUNDS | | $ 1, 200 / container | | | |
| | 10, 001 – 20, 000 POUNDS | | $ 1, 685 / container | | | |
| | 20, 001 – 30, 000 POUNDS | | $ 2, 170 / container | | | |
| | 30, 001 – 40, 000 POUNDS | | $ 3, 185 / container | | | |
| | 40, 001 – 50, 000 POUNDS | | $ 4, 185 / container | | | |
| | GREATER THAN 50, 000 POUNDS | | special request | | | |
| | | | | | | |
| SURCHARGE – | IRRADIATED HARDWARE OVERPACK | | $ 8, 500 / shipment | | | |
| | | | | | | |
| | | | | | | |
| SURCHARGE – | SPECIAL NUCLEAR MATERIAL (SNM) | | $ 8.15 / GRAM | | | |
| | (SNM) > 5 GRAMS PER SHIPMENT | | | | | $ 10.00 / GRAM |

* – COST DATA EFFECTIVE 1/1/94.

** – COST DATA ARE NOT AVAILABLE AT THIS TIME.

**Height/Access**

In most decommissioning situations, the components or structures to be decontaminated or removed are not at a convenient working height or are in confined cubicles. Workers in these cases must work on scaffolding or in awkward positions (e.g., below floor level, face down; beneath components; or twisted into uncomfortable positions). These positions impede worker productivity and often require time to configure scaffolding or other means by which to reach these work areas.

**Site Labor Productivity**

This cost factor was developed because craft labor varies in productivity throughout the country. This factor allows for variations in local labor productivity rates against the national average.

**Table 15.5. PPE Lost Time Guidelines**

| EPA Level | Lost Time Factor Range* |
|---|---|
| A | 50–75% |
| B | 50–75% |
| C | 20–50% |
| D* | 0–20% |

* Lost Time Factor from badging in gate (brass alley) to worker's change room is site specific. Lost Time Factor accounts for reduced productivity, dressout time, and decontamination of personnel PPE equipment.

### 15.3.8.2 Regional Variation in Labor Rates

The maximum variations from the national average are –37% to +55%. If per diem expenses are required, they are added to the base labor rates. For example, a $30 per diem for room and board (depending on regional allowances and preset government base rates) would add $3.75/hr to the base rate. Per diem expenses vary considerably and local rates must be determined.

#### 15.3.8.3 Material and Equipment Cost Variations

*Building Construction Cost Data* gives material price indexes. From this listing, it is apparent that regional costs for material and equipment vary from the national average.

#### 15.3.8.4 Overhead Plus Fee, Salvage, and Scrap Value Variations

Contractor overhead plus fee varies from job to job and from contractor to contractor.

Salvage is usually analyzed in terms of usability on other projects or possible resale to other interested parties. These should be investigated on every project to determine the best value for salvage of the material. Scrap value for steel varies regionally and values of this variation may be obtained from *Iron Age* magazine.

#### 15.3.8.5 Energy Cost Variations

The data in Table 15.2 includes fuel oil prices and electrical rates based on information from the U.S. Bureau of Labor Statistics. A utility usually charges itself lower electrical rates than the industrial rates shown.

## 15.4 Schedule and Resources

This section outlines the overall methodology for the development of schedule and resource requirements of a decommissioning project. Examples of schedules, logic diagrams, and resource profiles are provided. A critical path of activities for a decommissioning project schedule is highlighted on the overall schedule. Typical resource curves are presented.

The efficient execution of a project and its successful completion are enhanced by the development of an appropriate plan. The planning effort identifies relative factors of the project, including what work will be done, when the work will be done, who will do the work, and how much the work will cost. The integration of these factors results in the development of a baseline plan for the project that is defined by the technical scope, budgets, and schedules.

The technical staff defines the tasks of a decommissioning project, the detailed estimate provides the budgets, and the schedule provides the time frames. The baseline plan, therefore, integrates these three to ensure that decommissioning activities are logically arranged, performance dates are clearly defined, and required resources are identified and available.

The framework for developing a detailed schedule is based on the building blocks that represent various tasks or subtasks of the project. These tasks representing the overall scope of work are logically sequenced—taking predecessor and successor task relationships into consideration along with any other time constraints—and combined into a schedule logic network. Task durations are then estimated, serving as the basis for schedule development. The resources

and budgets (i.e., workhours and dollars) from the detailed estimate are then applied to each of the tasks in the network. (Figure 15.7 represents the interaction between estimating and scheduling that is necessary to determine resource and budgetary requirements.) When schedule, resource, and budgetary requirements are determined, resource curves (i.e., resource profiles) can be developed. These resource profiles show the projected requirements and usage of the resources over time.

### 15.4.1 Schedule

The schedule provides the forecasted start and finish dates for the project tasks from which the overall duration for completing the project is determined. Typically, schedules for decommissioning projects can be summarized to higher levels representing distinct phases of work that should be accomplished in logical sequence. For example, the phases of a decommissioning project are assessment, development, operations, and closeout. While performances of portions of some phases may overlap, for the most part they are sequential. Overall schedules for each phase can be determined by judicious grouping of tasks and summarizing of their schedules within each phase. Figure 15.8 is a representative bar chart that shows major phases of a project. The schedule also allows for the identification of the critical tasks within the project that can impact the scheduled completion. These activities create a critical path through the schedule. The *critical path* is defined as those activities which, if delayed, delay the overall project schedule. It defines the minimum amount of time that should be required for project completion. Critical path activities are usually highlighted on schedules by displaying them with a solid bar. A time-phased logic network showing the critical path is presented in Figure 15.9.

#### 15.4.1.1 Schedule Methodology

The proposed schedule for a decommissioning project takes into account the entire process and sequencing of tasks from the beginning of the program through final project closeout. The initial step in developing the schedule is to identify the tasks that comprise each phase of the project. For scheduling purposes, typical elements of the project include the following:

- preliminary site characterization,
- safety documentation,
- NEPA documentation (for federal projects),
- permits and approvals,
- comprehensive site characterization,
- conceptual design,

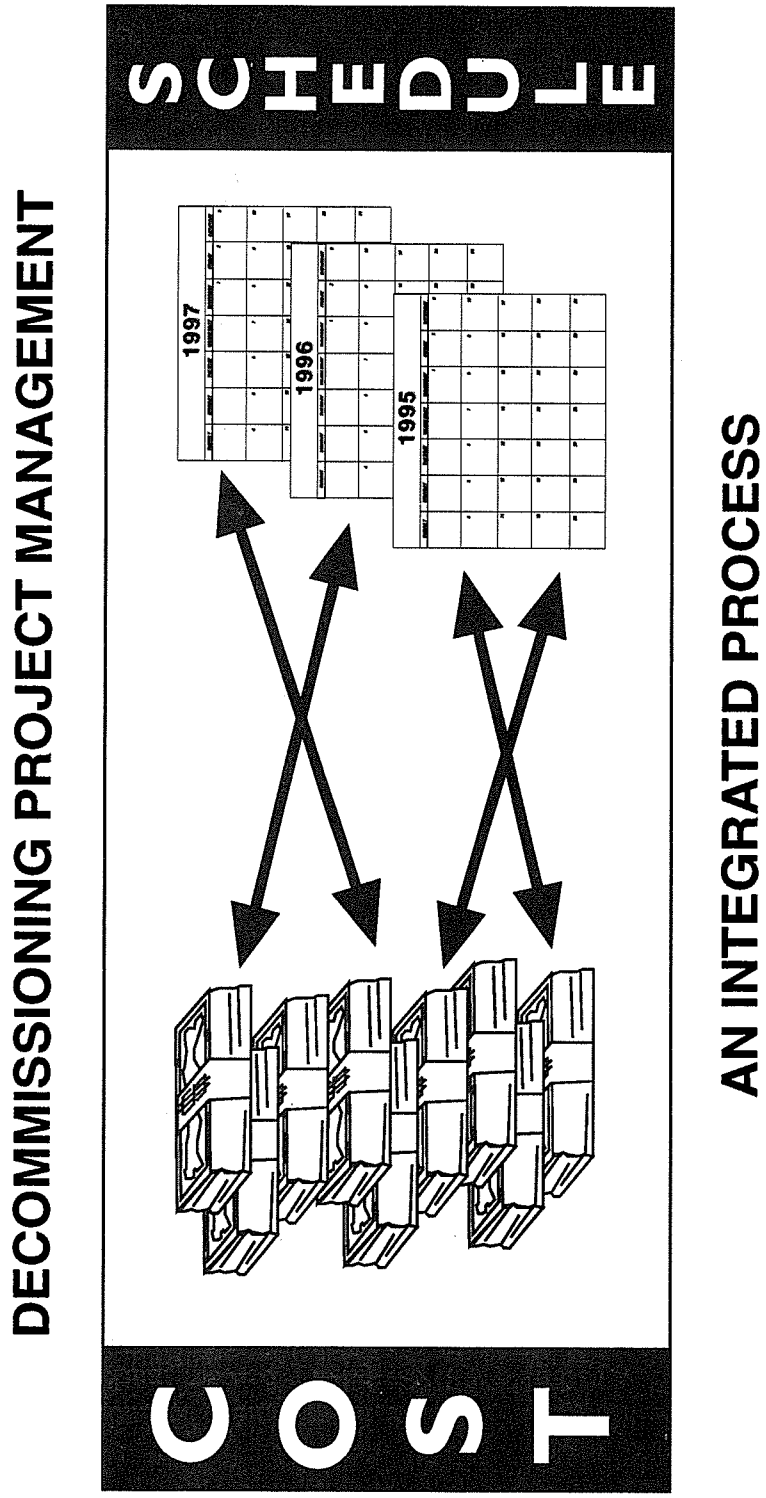


**Figure 15.7. Estimating/scheduling/cost control interaction**

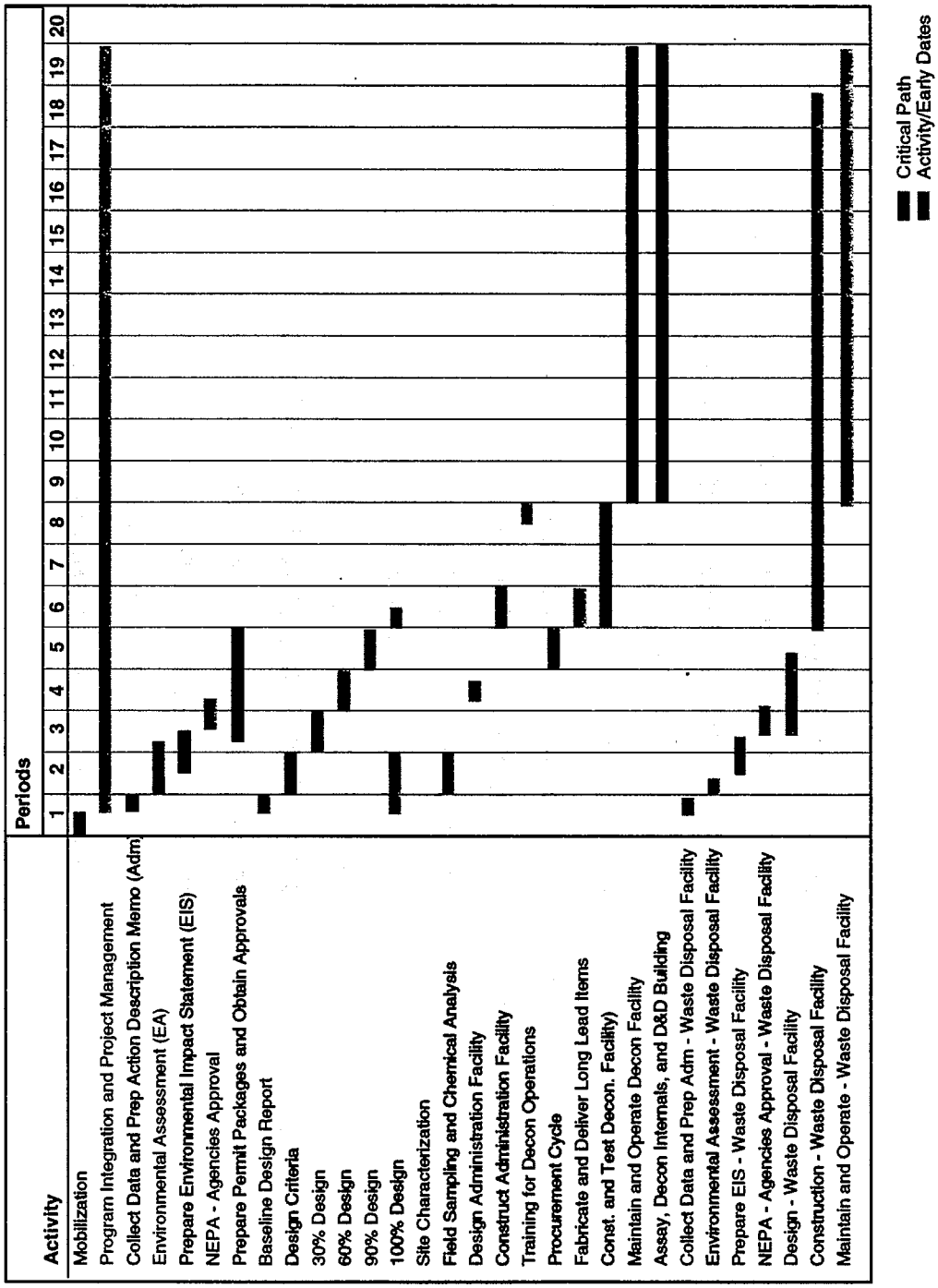


**Figure 15.8. Representative milestone schedule**

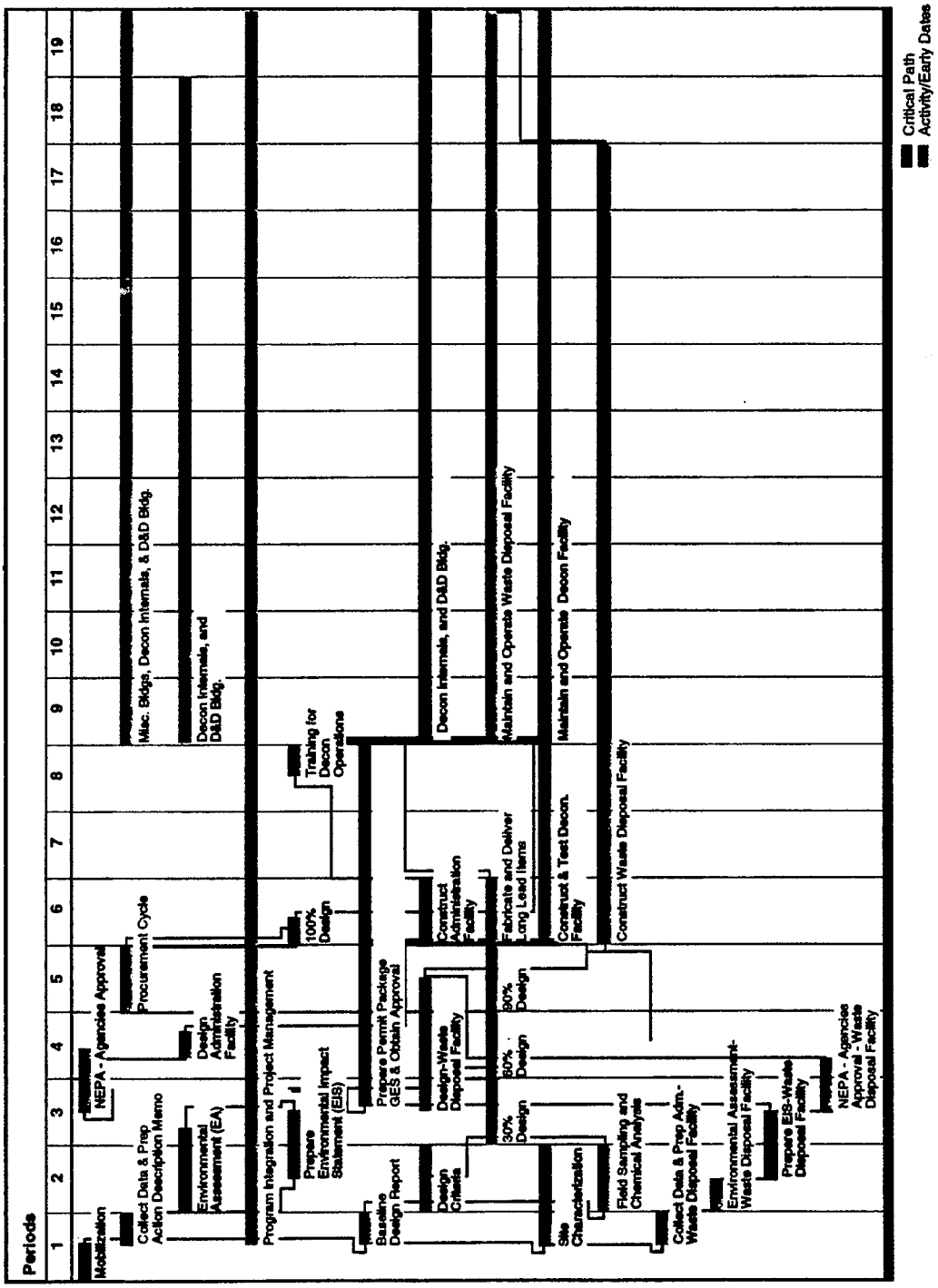


**Figure 15.9. Logic network**

- decommissioning plan,
- preliminary design (Title I),
- detailed design (Title II),
- procurement,
- dismantling and demolition,
- decontamination,
- waste treatment,
- transportation and final disposal,
- inspection (Title III),
- final survey, and
- independent verification.

These elements can be further subdivided to represent discrete measurable units of work that can be clearly defined with regard to scope, schedule, and cost. Using the estimate of workhours developed as part of the decommissioning cost estimate, one can develop durations for each subelement activity. The activities are then tied to one another in their logical sequence of progression to develop logic networks. These data can then be loaded into a computer-based scheduling program that uses Critical Path Method (CPM) algorithms to generate the schedule and determine overall project duration and that identifies the critical path of network tasks.

#### 15.4.1.2 Assumptions and Bases for Schedule Development

The basis for the development of a project schedule is produced through an understanding of the technical scope of work, demonstrated experience of the project team, and sound engineering judgment. An example of a list of assumptions for the basis of the schedule development is as follows:

- use of standard 5-day work week or some alternative,
- number of shifts per day,
- selected holiday schedule,
- crew size and number of crews,

- milestone constraint dates required for completion and intermediate accomplishments, and
- funding constraints.

#### 15.4.1.3 Schedule Development

The building block approach is established and subdivided into an activity hierarchy. The activities are defined in greater detail at the lower levels and are progressively more summarized at each higher level. The advantage of using this approach is the establishment of discrete tasks or subactivities whose scope can be uniquely defined and represent the manageable elements of work that can be performed. These tasks allow for easy loading of resources (workhours and costs) into the schedule in order to generate the cost and workhour resource curves.

Through the use of engineering block flow diagrams and cost estimates, network logic diagrams can be developed to identify activity elements, activity relationships, and activity durations to appropriate levels of the building block. Summary activities can also be created to provide schedule and cost for higher level elements. Once all the schedule elements are established, they are loaded into a computerized scheduling program that generates the schedule, determines the overall project duration, and identifies the critical path.

#### 15.4.1.4 Critical Path Analysis

Using the raw schedule information of activity elements, durations, relationships, and constraints, the scheduling program with CPM algorithms calculates the project schedules and identifies the critical path. The critical path is that sequence of activities that represent the minimum amount of time a project will take to be completed. Some activities are part of the critical path and some are not. An incremental change to any critical path activity will translate into a corresponding incremental change in the overall schedule. Optimizing the schedule can be done by conducting "what if" scenarios on such factors as changing activity relationships, resource availability, or resource loading.

### 15.4.2 Resource and Cost

The primary cost of the decontamination process and related work scope is determined as discussed in Section 15.2. Workhour and cost requirements are developed for each activity in the schedule. Other resources such as equipment or utilities can become limitations on the schedule and should be considered in its development. The sum of the workhours assigned to each activity will equal the total number of workhours in the estimate plus equivalent workhours of indirect costs and subcontractor dollar estimates. The sum of all dollar estimates associated with each activity will equal the total dollar values in the cost estimate.

### 15.4.2.1 Resource Cost Development

The workhour and dollar values presented in the estimate are broken down by the building block elements. The schedule follows the building block architecture, thus providing a convenient match between estimate cost summaries and scheduled activities. The various cost summaries for direct cost are composite figures, typically representing the costs and workhours for prime contractors, costs associated with subcontractors and vendors, and material and equipment costs. Material and equipment costs have no associated workhours; however, subcontractor cost will be inclusive of workhours.

To identify the direct workhours against a building block cost summary, the workhours embedded in the subcontractor dollar estimate have to be "extracted" and then added to the workhours associated with the prime contractor work. The total cost inclusive of labor, equipment, and material for contractors is divided by the total workhours. Direct workhours are loaded into the schedule at the appropriate level of the building block.

Direct workhours represent only one component of the total workhours. The other component is the workhours associated with indirect costs for management and administrative personnel to oversee contract work. The cost estimate will establish a percent markup on top of direct costs to cover indirect costs. The estimate (or estimator) is to establish a fixed unit dollar rate that is an appropriate factor for the indirect workhours from any dollar estimates. Based on this, the total direct cost associated with a cost account is multiplied by the markup percent and then divided by the estimated workhour unit rate to determine the indirect workhours.

### 15.4.2.2 Resource Curves

The cost estimate is broken down into direct dollars against the building block element, making the loading of the schedule fairly straightforward since the schedule is also broken down by building block element. Typically, all costs are loaded into the schedule at an appropriate WBS level and spread linearly over the duration of the schedule. Other methods of cost distribution may be implemented depending on the factors within the schedule.

With all resources loaded into the scheduling program, it can then produce a time-phased resource profile in either full-time equivalents (FTEs) or dollars, showing resource usage or requirements over the life of the project.

The resource profile, Figure 15.10, identifies resource requirements needed by period to complete the work within the project schedule. The resource curve for the total program, which gives the cumulative cost, is presented in Figure 15.11. The demographic factors of the facility and area in combination with other project parameters will determine whether or not the schedule is likely to be resource constrained. Factors such as the availability of qualified personnel and required crew sizes and crew mix will determine whether or not a schedule is practical. Funding availability and/or budgetary restrictions imposed by legislative or funding sources can also impact project schedules.

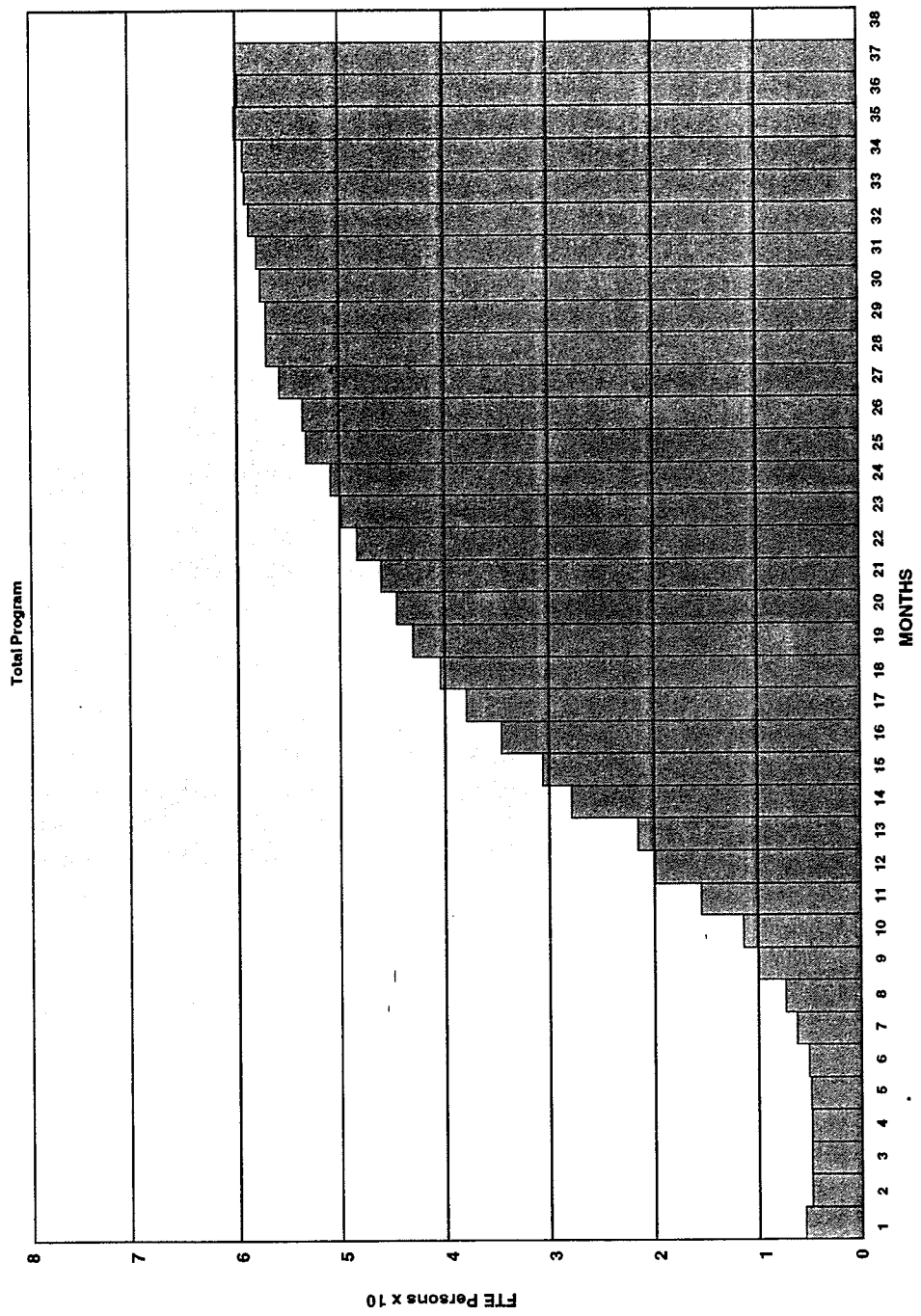


**Figure 15.10. Project resource profile**

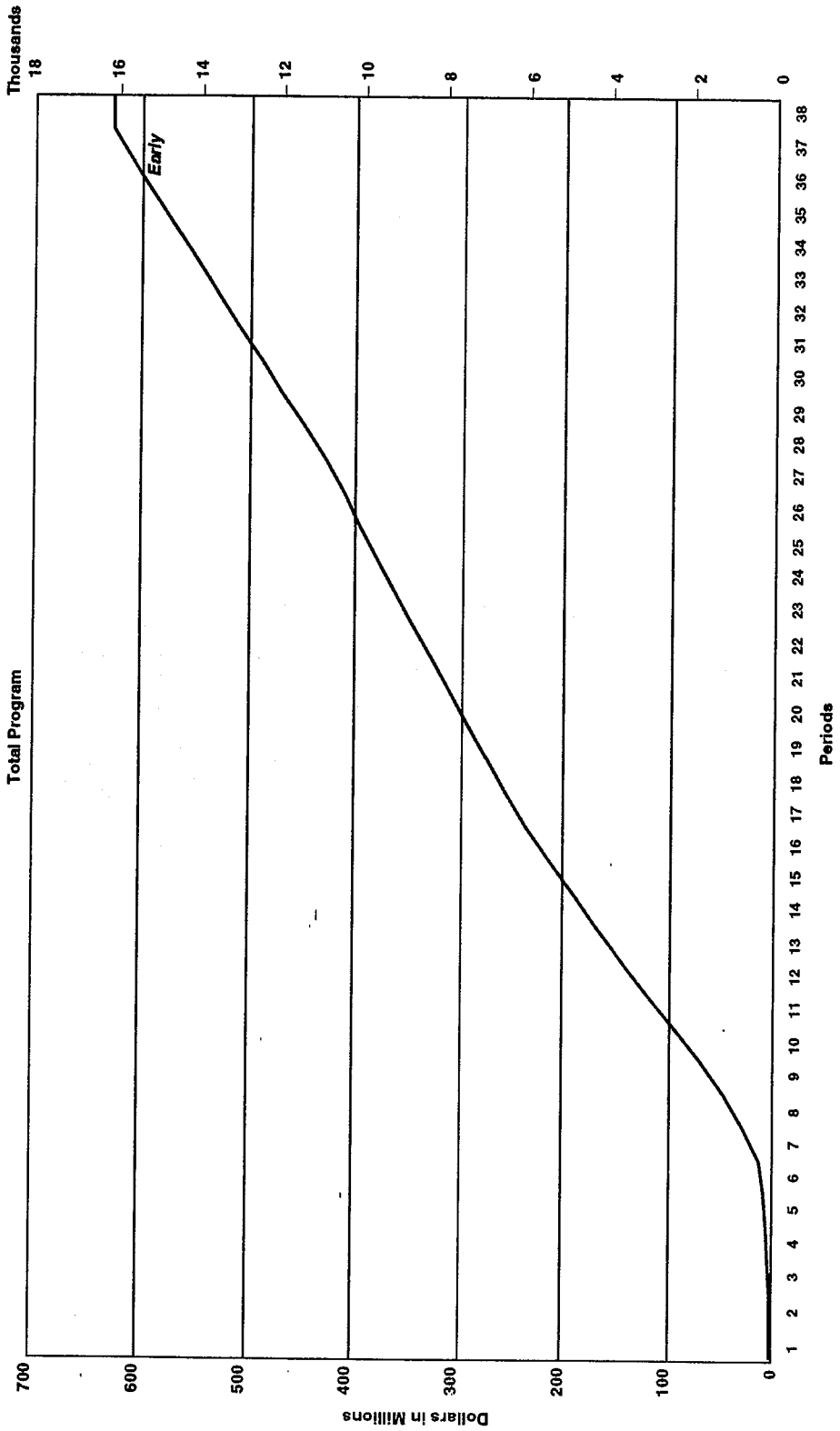


Figure 15.11. Project cash flow

## 15.5 Conclusion

This chapter on decommissioning cost estimates is not intended to be a comprehensive cost data reference. The tables presented are based on reliable cost data for 1993, unless noted otherwise. These figures were included as general trend indicators only. Material, labor, equipment, and other cost tables can be found in well-known standard sources of data and are referenced within the text. The figures in this chapter are not the only sources of reliable information.

Cost estimates should be as accurate as possible, using a consistent approach to all tasks within the project. This chapter recommends a certain method, the building block approach, for the structuring of the cost estimate and further recommends that the assignment of costs be interactive with the schedule of the project. It discusses those items that should be considered when developing a decommissioning cost estimate and schedule.

## 15.6 References

*Barnwell Low-Level Radioactive Waste Management Facility Rate Schedule.* Chem-Nuclear Systems, Inc.

*Building Construction Cost Data.* 1993. Robert Snow Means Company, Inc. Duxbury, Massachusetts.

*Building Construction Cost Data.* 1979. Robert Snow Means Company, Inc. Duxbury, Massachusetts.

*Building Construction Estimating Standards.* Richardson Engineering Services, Inc. Solana Beach, California.

*Employment and Earnings.* May 1993. Vol. 40, No. 5. U.S. Department of Labor Bureau of Labor Statistics.

*"Fuel Oil Cost Index." Petroleum Marketing Annual 1991.* Energy Information Administration, Office of Oil and Gas.

"Industrial Electrical Power Cost Index." *State Energy Price and Expenditure Report.* 1991. Energy Information Administration, Office of Energy Markets and End Use.

LaGuardia, T. S. October 2–4, 1991. *International Seminar on Decommissioning Policies.* Paris, France.

*McMaster-Carr Catalog #84.* 1978. McMaster Carr Supply Co. Chicago, Illinois.

*McMaster-Carr Catalog #98.* 1992. McMaster Carr Supply Co. Chicago, Illinois.

"Materials Prices." November/December 1992. *Iron Age.* 8:11.

Moghissi, A. A., H. W. Godbee, and S. A. Hobart, eds. *Radioactive Waste Technology.*

Moylan, J. J. and M. Mossman. 1992. *Means Mechanical Estimating Standards and Procedures.* 2nd ed. R. S. Means Co., Inc. Kingston, Massachusetts.

*Process Plant Construction Estimating Standards.* 1993. Vol. 1. Richard Engineering Services, Inc. Mesa, Arizona.

*Producer Price Indexes Data for August 1993.* September 1993. U.S. Department of Labor: Bureau of Labor Statistics.

*The Richardson Rapid Construction Cost Estimating System.* 1993. Richardson Engineering Services, Inc. Solana Beach, California.

*Schedule A Disposal Charges.* July 2, 1993. U.S. Ecology Washington Nuclear Center for Radioactive Waste Disposal.

Seymore, F. W. *Nuclear Decommissioning Cost Estimating Methodology.* TLG Services, Inc. Bridgewater, Connecticut.

*State Energy Price and Expenditure Report 1991.* September 1993. U.S. Department of Energy: Office of Energy Markets and End Use. DOE/EIA-0376(91).

"Table 39: No. 2 Fuel Oil Prices by Sales Type and Selected States." August 1992. *Petroleum Marketing Monthly.* Energy Information Administration.

Waier, Philip R., Ed. *Means Building Construction Cost Data.* 1993. 51st ed. R. S. Means Co., Inc. Kingston, Massachusetts.

*United Power Association: Final Elk River Reactor Program Report.* Revised November 1974. C00-651-93. Elk River, Minnesota.

# APPENDIX

# ESTIMATION OF RADIOACTIVE INVENTORY

The decommissioning of nuclear facilities requires knowledge concerning the radioactivity inventory within the facility. The radioactive inventory is required to identify radiological controls necessary during the decommissioning and to provide for the appropriate disposal of the waste material. In any nuclear facility, there are two main sources of radioactive material. The first source is radioactive material used or generated in the process that may, in part, be transportable. Examples of this type of material are fission products that are released to the primary system, crud such as $^{60}Co$, and the specific process materials and their radioactive decay daughters, such as $UF_6$ and $^{210}Pb$. The second source is from stationary material that has become activated due to exposure to neutrons.

Both of these sources have to be quantified before beginning the decommissioning operations at the facility. This appendix presents information to assist the knowledgeable individual in calculating the appropriate quantities of the radioactive material inventory and the radiation dose rates associated with that inventory. The first section to this appendix discusses the theory, calculation, and measurement of the activation of materials in the facility. The second section to this appendix includes the measurement and calculation of radiation dose rates within the facility.

## A.1 Activation

### A.1.1 Activation Analysis

In nuclear facilities that contain neutron-generating sources, such as fission power plants, fusion reactors, and some hot cells, radioactivity is induced in formerly nonradioactive materials. This is caused by the interaction of the neutrons escaping from the source, be it reactor or shielded source, interacting with the materials external to the source and causing nuclear transmutation of the isotopes in the materials. The magnitude of activation of isotopes in the external materials is directly proportional to the magnitude of the neutron fluence accumulated in that material. Therefore, for facilities that have a low neutron flux or short periods of neutron generation, the resultant activity will be minimal. However, facilities with a high neutron flux and long periods of neutron generation will be activated to a large extent. The level of the fluence directly relates to the extent of activation in the facility and should be known in order to determine whether activation will be significant to the radioactive inventory in the facility.

### A.1.2 Theory of Activation

Activation of materials occurs when neutrons interact with the nuclei of atoms and are absorbed, causing the nucleus to be transmuted from one isotope into another isotope. This transmutation can occur with the release of photons or particles and may result in a radioactive isotope.

Activation is of importance in that trace elements that may have high absorption cross sections have decay daughters with long half-lives and decay with gamma ray emission.

### A.1.2.1 Neutron Interactions

Neutrons that are released from the nucleus interact with matter in one of two ways. The two ways are *scattering* and *capture*. Scattering can be either elastic or inelastic. These reactions are denoted by n,n and n,n′, respectively. For purposes of activation analysis, this interaction is of no importance, even though inelastic scattering produces gamma rays. Capture of neutrons by the nuclei of atoms causes four different reactions. The neutron can be captured and one or more gamma rays are emitted. This reaction is abbreviated as n,$\gamma$. The neutron can be captured as the result of a charged-particle reaction, such as n,$\alpha$ or n,p reactions. Neutron interactions can also result in more neutrons being emitted. These reactions are n,2n and n,3n reactions and only occur with high-energy neutrons. The last capture mechanism for neutron interaction is fission. This reaction is the basis for nuclear power plant operation and has no importance for materials that are involved in activation analyses for decommissioning projects. Figure A.1 illustrates the various neutron interactions that are of importance to activation analyses.

### A.1.2.2 Products of Neutron Interactions

The results of the neutron interactions with the materials can be a new nuclide that is stable, a new nuclide that is the progenitor of a decay chain in which all radioactive daughters are short-lived, or a new nuclide that is the progenitor of a decay chain that contains at least one long-lived radioactive daughter. Figure A.2 illustrates the results of the neutron interaction. The only result of importance to the radioactive inventory at the time of decommissioning is the one below the dashed line, that is, the long-lived radioactive isotope in the decay chain.

### A.1.2.3 Equations Relating Neutron Reactions

The number of atoms of isotope $i$ generated from neutron interactions of the target nucleus during time period $dt$ is given by

$$\frac{dn_i}{dt} = \Sigma_i \cdot \phi_a - \lambda_i \cdot n_i \,, \tag{A.1}$$

where

$n_i$ = number of atoms of isotope $i$,
$dt$ = time period for calculation,
$\Sigma_i$ = macroscopic cross section for generation of nuclide $i$,
$\phi_a$ = constant flux during time period $dt$,
$\lambda_i$ = decay constant for nuclide $i$.

**DISPLACEMENTS CAUSED BY NUCLEAR INTERACTION REACTIONS**

| | | | |
|---|---|---|---|
| n, 3n | n, 2n | *Original Nucleus*<br>n, n<br>n, n' | n, γ |
| | n, t<br>n, nd | n, d<br>n, np | n, p |
| | n, α<br>n, n$^3$He | n,$^3$He<br>n, pd | |

Z

N

**LEGEND:**

| | |
|---|---|
| n | neutron, before or after elastic scattering reaction |
| n' | inelastic scattered neutron |
| γ | gamma ray |
| p | proton |
| d | deuteron, $^2$H |
| t | triton, $^3$H |
| $^3$He | light helium |
| α | alpha particle, $^4$He |

**Figure A.1. Displacements caused by nuclear interaction reactions**

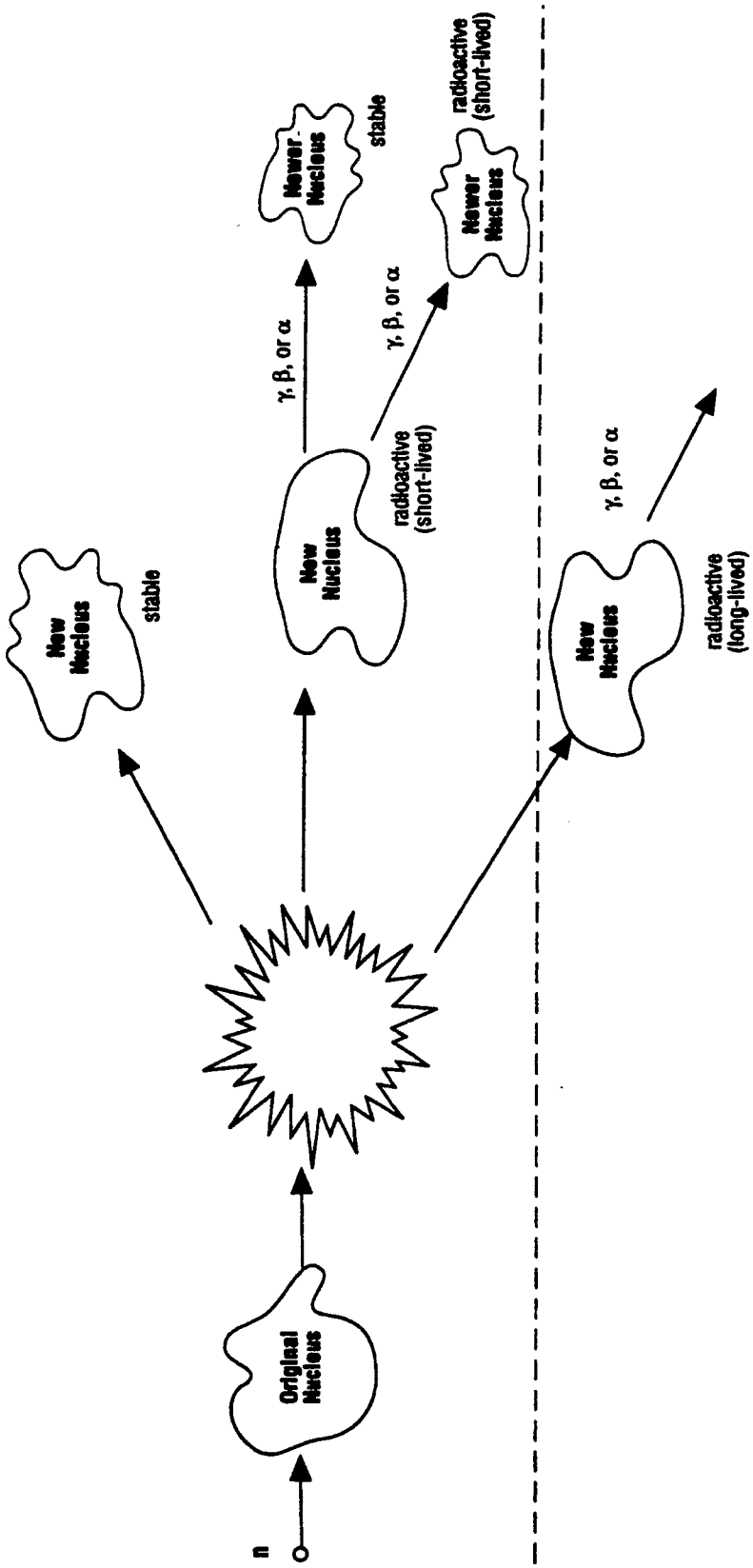


**Figure A.2. Neutron Interaction Products**

The activity of isotope $i$ at time $\tau$ after irradiation is given by

$$A_i = \sum_j \Sigma_{ij} \cdot \sum_n \frac{\phi_{n_a}}{\kappa} \cdot \left(1 - e^{-\lambda_i \cdot t_n}\right) \cdot e^{-\lambda_i \tau_n} , \tag{A.2}$$

where

$A_i$ = activity of isotope $i$ from all parents, Ci;
$\Sigma_{ij}$ = macroscopic cross section for generation of nuclide $i$ from parent isotope $j$;
$\phi_{n_a}$ = constant neutron flux during time period $n$;
$\kappa$ = $3.7 \times 10^{10}$ disintegrations per second per Curie;
$t_n$ = length of irradiation time period $n$;
$\tau_n$ = length of postirradiation time period $n$.

In addition to multiple time periods for irradiation of the target (in the form of the summation over $n$ irradiation time periods), Equation A.2 has the capability of providing all parents (in the form of the summation over $j$ parents) of a daughter $i$. If the neutron flux is known for multiple energy groups $k$, then Equation A.2 can be expanded by the following energy dependency:

$$\sum_k \Sigma_{ijk} \cdot \phi_{n_a k} , \tag{A.3}$$

where

$\Sigma_{ijk}$ = macroscopic cross section for generation of nuclide $i$ from parent isotope $j$ in neutron energy group $k$,
$\phi_{n_a k}$ = constant neutron flux in time period $n$ in energy group $k$.

The macroscopic cross section is also a product of energy and space variables. This cross section is given by

$$\Sigma_{ijk} = N_j \cdot \sigma_{ijk} , \tag{A.4}$$

where

$N_j$ = number density of target nuclide $j$, atoms per $cm^3$;
$\sigma_{ijk}$ = microscopic cross section for neutron interaction from $j$ to $i$ in neutron energy group $k$, $cm^2$.

In all cases, the flux and number densities can be space dependent variables:

$$\phi_{n_k}(x,y,z) \ ,$$

$$N_j(x,y,z) \ ,$$

and consequently,

$$\Sigma_{ijk}(x,y,z) \ .$$

Equation A.2 modified by Equations A.3 and A.4 is the general equation for calculating the activation of any isotope $i$ for any one position in space with multiple parents and multiple neutron energy groups. For other isotopes, the equation must be recalculated, as is the case for different neutron flux distributions.

### A.1.2.4 Important Radioactive Activation Products

The isotopes that are important in decommissioning activation calculations are listed in Table A.1. The isotopes are the long-lived radioactive isotopes that may be found in the structural materials of steel, concrete, and specialty materials such as reactor internals.

**Table A.1. Some Activation Product Radionuclides**

| Isotope | Half-life (yr) | Production | Isotope | Half-life (yr) | Production |
|---|---|---|---|---|---|
| $^{14}C$ | 5,730 | $^{14}N$ (n,p) | $^{113}Sn$ | 0.32 | $^{112}Sn$ (n,γ) |
| $^{22}Na$ | 2.6 | $^{19}F$ (α,n) | $^{121}Sn$ | 50 | $^{120}Sn$ (n,γ) |
| $^{35}S$ | 0.24 | $^{34}S$ (n,γ) | $^{121m}Te$ | 0.41 | $^{120}Te$ (n,γ) |
| $^{39}Ar$ | 269 | $^{38}Ar$ (n,γ) | $^{123m}Te$ | 0.33 | $^{122}Te$ (n,γ) |
| $^{40}K$ | $1.28 \times 10^9$ | $^{39}K$ (n,γ) | $^{125}Sb$ | 2.7 | $^{124}Sb$ (n,γ) $\beta^-$ |
| $^{41}Ca$ | $1.30 \times 10^5$ | $^{40}Ca$ (n,γ) | $^{134}Cs$ | 2.06 | $^{133}Cs$ (n,γ) |
| $^{45}Ca$ | 0.44 | $^{44}Ca$ (n,γ) | $^{139}Ce$ | 0.37 | $^{138}Ce$ (n,γ) |
| $^{46}Sc$ | 0.23 | $^{45}Sc$ (n,γ) | $^{145}Sm^{145}Pm$ | 17.7 | $^{144}Sm$ (n,γ) ε |

## Table A.1. Some Activation Product Radionuclides

| Isotope | Half-life (yr) | Production | Isotope | Half-life (yr) | Production |
|---|---|---|---|---|---|
| $^{55}Fe$ | 2.7 | $^{54}Fe$ (n,γ) | $^{146}Sm$ | $1 \times 10^8$ | $^{147}Sm$ (n,2n) |
| $^{54}Mn$ | 0.86 | $^{54}Fe$ (n,γ) | $^{147}Pm$ | 2.6 | $^{146}Nd$ (n,γ) $\beta^-$ |
| $^{57}Co$ | 0.74 | $^{58}Ni$ (γ,n) | $^{150}Eu$ | 36 | $^{151}Eu$ (n,2n) |
| $^{60}Co$ | 5.3 | $^{59}Co$ (n,γ) | $^{151}Sm$ | 87 | $^{150}Sm$ (n,γ) |
| $^{59}Ni$ | $8 \times 10^4$ | $^{58}Ni$ (n,γ) | $^{152}Eu$ | 13 | $^{151}Eu$ (n,γ) |
| $^{63}Ni$ | 100 | $^{62}Ni$ (n,γ) | $^{153}Gd$ | 0.66 | $^{152}Gd$ (n,γ) |
| $^{65}Zn$ | 0.67 | $^{64}Zn$ (n,γ) | $^{154}Eu$ | 8.6 | $^{153}Eu$ (n,γ) |
| $^{75}Se$ | 0.33 | $^{74}Se$ (n,γ) | $^{155}Eu$ | 5 | $^{157}Sm$ (n,γ) $\beta^-$ |
| $^{93}Nb$ | 12 | $^{93}Nb$ (n,n′) | $^{157}Tb$ | 150 | $^{156}Dy$ (n,γ) ε |
| $^{94}Nb$ | $2.0 \times 10^4$ | $^{93}Nb$ (n,γ) | $^{159}Dy$ | 0.39 | $^{158}Dy$ (n,γ) |
| $^{93}Mo$ | $3.0 \times 10^3$ | $^{92}Mo$ (n,γ) | $^{163}Ho$ | 33 | $^{163}Er$ (n,γ) ε |
| $^{97}Tc$ | $2.6 \times 10^6$ | $^{96}Ru$ (n,γ) ε | $^{166m}Ho$ | 1,200 | $^{165}Ho$ (n,γ) |
| $^{99m}Tc$ | $2.1 \times 10^5$ | $^{98}Mo$ (n,γ) $\beta^-$ | $^{170}Tm$ | 0.35 | $^{169}Tm$ (n,γ) |
| $^{102}Rh$ | 3 | $^{103}Rh$ (γ,n) | $^{171}Tm$ | 1.9 | $^{170}Er$ (n,γ) $\beta^-$ |
| $^{108m}Ag$ | 130 | $^{107}Ag$ (n,γ) | $^{177}Lu$ | 0.44 | $^{176}Lu$ (n,γ) |
| $^{109}Cd$ | 1.24 | $^{108}Cd$ (n,γ) | $^{178}Hf$ | 30 | $^{177}Hf$ (n,γ) |
| $^{110m}Ag$ | 0.69 | $^{109}Ag$ (n,γ) | $^{192}Ir$ | 241 | $^{191}Ir$ (n,γ) |
| $^{113m}Cd$ | 14.6 | $^{112}Cd$ (n,γ) | $^{193}Pt$ | 50 | $^{192}Pt$ (n,γ) |

## A.1.3 Activation Calculations

This section describes the calculation of the activation of materials that have been exposed to a neutron flux. The basic items of data required to begin the calculation are the neutron flux history in time, neutron flux distribution by energy group, material composition of the target material, and sufficient nuclear data for the appropriate calculation to proceed. The neutron flux history is required to calculate the generation and decay history of the isotopes of interest. The neutron distribution by energy group is required if energy dependent calculations are necessary. The material composition in a gross sense (only major components) is required, if the neutron flux has to be calculated by appropriate methods. The material composition in a detailed sense (trace element analysis results) is required to perform the activation calculation. Required nuclear data for the calculation of activation include cross-sectional data for neutron interactions of interest to the activation isotopes and general scattering and absorption cross sections, if the neutron flux has to be calculated by appropriate methods.

### A.1.3.1 General Procedure

The general procedure for performing an activation product calculation is composed of three steps. The first step is to calculate or otherwise obtain the neutron flux data, both energy-and space-dependent fluxes. The second step is to determine the trace element compositions of the materials that have been activated. The third step is to combine the neutron flux data with the material composition data to calculate the activity of radioisotopes generated by neutron activation. Figure A.3 illustrates this procedure in the most general case, which is when the neutron flux must be calculated.

**Neutron Flux Determination**

In general, the procedure to calculate the activation of materials that are important to decommissioning requires the calculation of neutron fluxes in many different spatial locations that have not been calculated or measured during the life of the nuclear facility. It is assumed that the neutron flux must be calculated based on "known" neutron flux values. (These known neutron fluxes may themselves be the product of calculations.) The total geometry of the neutron source, surrounding scattering materials, and materials of interest to the activation analysis must be determined and modelled for the computation of the neutron flux. The neutron scattering cross sections for the source material, scattering material, and activation material major components must be provided to the neutron flux calculation code. The output of the neutron flux calculation code will be the steady-state neutron flux distribution throughout the source and all scattering media, including the activator materials. The neutron flux calculation can use either a neutron diffusion calculation method, a discrete ordinate neutron transport calculation technique, or a Monte Carlo-type transport calculation method. Each of these calculation techniques is available for large mainframe computers as well as personal computer workstations. Table A.2 provides some details for some of the computer codes available for the neutron flux

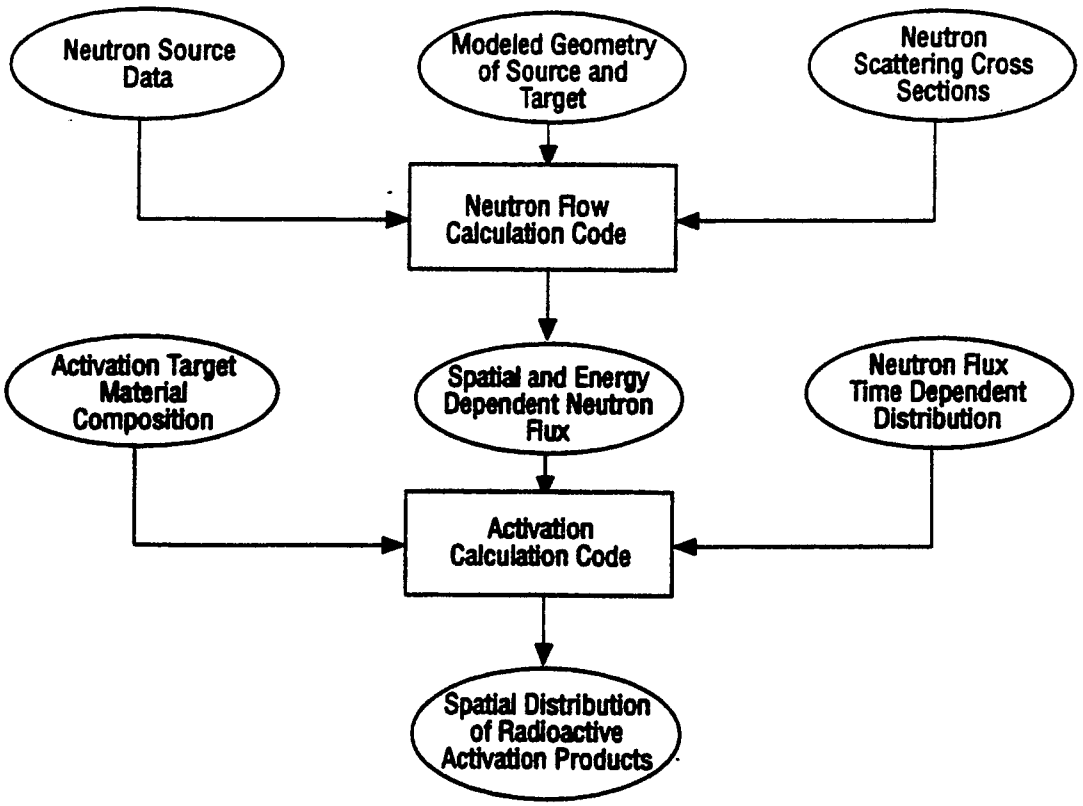


**Figure A.3. General procedure for activation analysis**

determination step. The Radiation Shielding Information Center (RSIC) at the Oak Ridge National Laboratory has the complete listing of computer codes that are available for use in these and other types of calculations.

## Material Composition Determination

To support the complete calculation of the radioactive isotopes in the activated material of interest, its material composition must be available. In addition to the atomic composition of the major components of the material, the trace elements that provide the targets for the activation must also be included in the composition of the material. The best results will occur, if a measurement of the trace elements has previously been performed. This trace measurement may be by chemical or neutron activation techniques. It is important to include all potential target elements in the search for trace elements. If no trace material analysis is available, the

**Table A.2. Neutron Flux Determination Computer Codes**

| Personal computer workstation codes | | | |
|---|---|---|---|
| **Name** | **Descriptive name** | **Type of code** | **Source** |
| Discrete Ordinates | ANISN Code Family | | RSIC |
| CCC-514<br>CCC-255<br>CCC-254 | ANISN/PC<br>ANISN-W<br>ANISN-ORNL | Multigroup one dimensional (1-D) discrete ordinates transport code with anisotropic scattering | |
| CCC-543<br>CCC-547 | TORT-DORT<br>TWODANT-SYS | 2-D transport codes | |
| Monte Carlo | | | RSIC |
| CCC-200 | MCNP 4.2 | Monte Carlo neutron and gamma ray transport code | |
| Diffusion | | | RSIC |
| CCC-603 | FPZD | Multigroup neutron diffusion/depletion calculations | |
| PSR-229 | GIP | Group cross section processor for preparation of data libraries for ANISN or DOT | RSIC |

## Table A.2. Neutron Flux Determination Computer Codes

| Personal computer workstation codes | | | |
|---|---|---|---|
| **Name** | **Descriptive name** | **Type of code** | **Source** |
| DLC-75 | BUGLE-80 | Coupled 47 neutron, 20 gamma, P3 cross section library in ANISN format | RSIC |

| Mainframe computer codes | | | |
|---|---|---|---|
| **Name** | **Descriptive name** | **Type of code** | **Source** |
| Discrete Ordinates | | | RSIC |
| | ANISN Family | Multigroup 1-D discrete ordinates transport code with anisotropic scattering | |
| CCC-253 | ANISN-PPL | | |
| CCC-254 | ANISN-ORNL | | |
| CCC-255 | ANISN-W | | |
| CCC-314 | ANISN-E | | |
| CCC-256 | TDT | 2-D transport codes | |
| CCC-282 | SNOW | | |
| CCC-293 | TRIDENT | | |
| CCC-412 | DTF-TRACA | | |
| CCC-458 | DTF-INDIA | | |
| CCC-543 | TORT-DORT | | |
| CCC-547 | TWODANT-SYS | | |
| Monte Carlo | | | |
| CCC-110 | AIRTRANS | Monte Carlo neutron and gamma ray transport code | |
| CCC-127 | MORSE | | |
| CCC-128 | O6R | | |
| CCC-200 | MCNP 4.2 | | |
| Diffusion | | | |
| CCC-260 | FEM-2D | Diffusion Theory calculation code | |
| CCC-284 | SHREDI | | |
| CCC-362 | TRD-3 | | |
| CCC-425 | MADONNA | | |
| CCC-434 | SNAP-3D | | |

typical concentration of trace elements can be taken from the composition of the earth's crust that is found in reference books, such as the CRC Handbook of Chemistry and Physics.

## Neutron Time Dependency Determination

The time dependency of the operating history of the nuclear facility is important, since the current level of activation is dependent on the magnitude of the neutron flux as well as the times for irradiation and decay. If possible, the most accurate distribution of flux magnitudes and lengths will be used to calculate the activation. In lieu of the actual time dependency, especially if the flux varied widely or often, certain approximations can be made. However, care must be taken to determine the average flux and time so that the approximate average value will result in the actual value. This can be done using one code with an abbreviated list of isotopes with the actual distribution and approximating the average for all isotopes.

## Activation Calculation

The neutron flux time dependency (or approximation) is input into the activation calculation code along with the activation material composition to compute the activity induced in the material as a result of neutron interactions. The basic calculation in the activation code is Equation A.2 as modified by Equations A.3 and A.4, as required. Simple codes would calculate the generation and decay of the primary isotopes considered in the calculation. More detailed calculation codes will include the effect of further transmutation of the activated materials, resulting in the decrease of the isotope of interest. This refinement of Equation A.1, to incorporate the effect of neutron interactions with the isotope of interest, results in

$$\frac{dn_i}{dt} = \Sigma_i \cdot \phi_a - \lambda_i \cdot n_i - \Sigma_i' \cdot \phi_a \,, \tag{A.5}$$

where $\Sigma_i'$ = macroscopic cross section for destruction (by capture) of nuclide $i$.

Equation A.2 would be recalculated including the isotope destruction term in Equation A.5.

Table A.3 provides some details on the computer codes available for the activation calculation step.

## Table A.3. Activation Analysis Computer Codes

**Personal computer workstation codes**

| Name | Descriptive name | Type of code | Source |
|---|---|---|---|
| CCC-164 | NAC | Neutron activation analysis and product isotope inventory code | RSIC |
| CCC-343 | LEOPARD | A spectrum dependent nonspatial fuel depletion code system | RSIC |
| CCC-370 | DCHAIN2 | Calculation of transmutation of nuclides | RSIC |
| CCC-371 | ORIGEN2.1 | Isotope generation and depletion code | RSIC |
| CCC-563 | PSU-LEOPARD/RBI | A spectrum dependent nonspatial depletion code | RSIC |

**Mainframe computer codes**

| Name | Descriptive name | Type of code | Source |
|---|---|---|---|
| CCC-101 | NAP | Multigroup time-dependent neutron activation prediction code | RSIC |
| CCC-164 | NAC | Neutron activation analysis and product isotope inventory code | RSIC |
| CCC-217<br>CCC-371<br>CCC-399<br>CCC-457 | ORIGEN Family<br>ORIGEN<br>ORIGEN2.1<br>ORIGEN-JR<br>KORIGEN | Isotope generation and depletion code system—matrix exponential method | RSIC |
| CCC-235 | INAP | Improved neutron activation prediction code system | RSIC |
| CCC-309 | EPRI-CINDER | General point-depletion and fission product code system | RSIC |

**Table A.3. Activation Analysis Computer Codes**

| Mainframe computer codes | | | |
|---|---|---|---|
| **Name** | **Descriptive name** | **Type of code** | **Source** |
| CCC-343 | LEOPARD | A spectrum-dependent nonspatial fuel depletion code system | RSIC |
| CCC-359 | MAGIK | A Monte Carlo code system for computing induced residual activation dose rates | RSIC |
| CCC-364 | SANDOR | Isotope generation and depletion code | RSIC |
| CCC-370 | DCHAIN2 | Calculation of transmutation of nuclides | RSIC |
| CCC-413 | FISPIN | Nuclide inventory calculation system | RSIC |
| CCC-442 | ACDOS3 | Calculation of activities and dose rates produced by neutron activation | RSIC |
| CCC-443 | REAC | System for activation and transmutation | RSIC |
| CCC-478 | ACFA | Versatile activation code for coolant and structural materials | RSIC |
| CCC-502 | NACT | Screening program for neutron activation products | RSIC |
| CCC-598 | FISPACT | Inventory code system for neutron activation analysis | RSIC |
| CCC-606 | ANITA | Analysis of neutron induced transmutation and activation | RSIC |
| DLC-069 | ACTL82 | Evaluated neutron activation cross-section library | RSIC |

### A.1.3.2 Postactivation Calculations

The output from the activation code will be the concentration of activation products in the various locations that were modelled in the third step. If only the concentration and total activity are required, the activation calculation is complete at this point. However, if the resulting radiation dose rates are desired within the initial geometry of the problem, another step is performed. This step is to take the activation product source data and input that data as the source for a gamma ray calculation using the same models developed in step one for the calculation of the spatial-dependent neutron flux. The results of this calculation will be the radiation fields observed as a result of the activation of the materials surrounding the neutron-emitting source.

### A.1.4 Verification of Activation Calculations

The activation analysis has been performed using verified computer codes, in that the codes have been tested to appropriately model the real situation and to provide results that are consistent with reality. Consequently, the results of the activation analysis can be used directly without actual sampling and verification. However, it is always better to perform some sampling and measurement to check the reasonableness of the computed activation product concentrations.

There are several methods for performing a verification of the activation analysis. Of all the methods, in situ measurement and sampling with radioisotopic laboratory analysis are the best.

In situ measurements involve placing an energy-discriminating detector at a location near to one of the activated materials and measuring the gamma ray spectrum. This spectrum is then compared to the one calculated in the last step of the activation analysis. The advantages of this method are that it provides direct confirmation of the calculated radiation dose rates in the vicinity of the material of interest, and no extraction of a sample is required, which reduces personnel exposure and attendant difficulty in extracting the sample. The disadvantages of this method are that the presence of other activated materials may interfere with the estimation of the concentrations in the material of interest, and the actual concentrations may be different than expected but still yield a similar gamma ray spectrum.

Extraction of a sample and performing a radioisotopic analysis is the direct measurement technique for determining the concentration of activation products in the material of interest. There are several advantages to this method. This measurement will directly correlate with the result of the activation calculation without the necessity of performing a gamma ray calculation. The accuracy of the radioisotopic analysis will allow high confidence in the quantity of radionuclides in the remainder of the activation material volume. The disadvantages to this method are the requirement to extract the sample in a radiation field, which may require remote operation of the extraction, and the fact that the initial design of the facility did not include preparing a specific target for the verification of the activation analysis.

When verification takes place, the results of the measurement are compared to the calculation results. The relative difference between the two can be used to generate a normalization to the calculated results or to show that the calculated results can be used directly. For one nuclear reactor being decommissioned, the difference between the calculated activation at a location within the shield surrounding the reactor and the measured value was less than a factor of 1.5.

### A.1.5 Activation Analysis Review

For nuclear processes that generate neutrons, the interaction of the neutrons with the surrounding material causes activation of the materials into different isotopes, some of which are radioactive and are of significance for radiation effects. The activation of the materials can be calculated using computer codes. The activities calculated can then be used to determine waste material volumes, radiological hazards and dose rates, and disposal activities. The accuracy of the calculated values would be determined by measuring the activity in a sample removed from an area that has been calculated.

## A.2 Radiation Dose Rates in Facilities

Knowledge of the radiation dose rate for the areas within the nuclear facility being decommissioned is required for the radiological control of decommissioning activities. The radiation dose rates associated with the equipment and materials being removed and disposed of are required in order to determine the waste classification and shielding requirements for transportation and disposal of the radioactive material. Radiation dose rates can be determined either by measurements in the facility or calculation of the expected dose rates. In some cases, the required radiation dose rate would be of such a magnitude or location within the facility that actual measurement would not be appropriate. In such a case, a calculation would be required. A verification measurement at some accessible location would be required to normalize or justify the radiation dose rate calculation. This section describes the sources of the radiation, measurement, or calculation of the resulting radiation field and verification of the calculated radiation fields by measurement at some locations.

### A.2.1 Sources of Radioactivity

All radioactivity contained within a nuclear facility originally came from the initial radiation source, whether a fission source from a reactor or a radioisotopic source for some function other than fission. This radioactivity can be segregated into roughly three categories of radioactive material: radioactivity from activation by neutrons; from deposition of radioactive material within the process piping; and from release or leakage from the process onto the facility surfaces, including floors, walls, ceiling and equipment. The radioactivity can be either mobile or immobile.

### A.2.1.1 Activation of Materials

The radiation from activated materials is not mobile since the radioactive nuclides are generated within the materials and remain within the structure of the activated material. Consequently, the hazard from activation products is in the static radiation field generated by their presence in the material. Removal of the radioactivity entails removal of the entire activated structure and not simply a surface cleaning.

### A.2.1.2 Internal Contamination

Radioactive material can be released from the initial source and can spread throughout the process equipment connected to the initial source. In a nuclear power reactor, the radioactive fission products can be released from the fuel elements and transported throughout the primary system along with the cooling water. These materials would deposit along the internal surfaces of the primary system piping and remain there (in equilibrium) for the remaining life of the facility. This source would act similarly to the activated material in presenting a static radiation field generated by the presence of the radioactive material. However, these radioactive materials can be transported away from the reactor, whereas the activation products do not migrate.

### A.2.1.3 External Contamination

External contamination is generated from releases and leakage of radioactive material from the primary system. The released contamination becomes airborne, whereupon it is drawn through the ventilation system and can deposit on any surface while being transported through the facility. By its very nature, external contamination is mobile and can be reentrained into the air and transported to other locations. Alternatively, the external contamination can get embedded in the surface on which it deposited and become fixed contamination. This material not only can be hazardous because of the generated radiation field, but the entrainment in air of the radionuclides can result in the radionuclides entering personnel through inhalation and ingestion exposure routes.

## A.2.2 Measurement of Radiation Fields

Radiation fields within the facility resulting from the presence of activation products, internal contamination, and external contamination can be measured by any of the instruments described in Chapter 8. The measurements can be either gross beta-gamma or multichannel analytical instruments. The gross beta-gamma measurements require a calculation to predict the radionuclide distribution that produces the given signal. The multichannel analysis instrument identifies the individual radionuclides that are in the sample by their characteristic gamma ray energies.

### A.2.3 Calculation of Radiation Fields

Radiation fields resulting from the presence of radionuclides can be calculated by hand techniques and by computer codes residing on personal computer workstations or on mainframe computers. Many of the computer codes can handle complex geometries that more accurately represent reality. A sampling of the computer codes available for use in the calculation of radiation fields is listed in Table A.4.

**Table A.4. Radiation Dose Rate Calculation Computer Codes**

| Personal computer workstation codes | | | |
|---|---|---|---|
| **Name** | **Descriptive name** | **Type of code** | **Source** |
| CCC-322 | S3 | Kernel integration code with multigroup gamma ray scattering | RSIC |
| CCC-468 | LINEDOSE | Line source shielding code | RSIC |
| CCC-493<br>CCC-565 | QAD-CGGP<br>QADMOD-GP | Point-kernel gamma ray shielding code | RSIC |
| CCC-494<br>CCC-564 | G33-GP<br>GGG-GP | Point source scattering calculation with buildup on first scatter leg | RSIC |
| CCC-595 | PUTZ2.1 | A point-kernel photon shielding code | RSIC |
| DLC-129 | ANS643 | Geometric progression gamma ray buildup factor and attenuation coefficients | RSIC |
| DLC-136 | PHOTX | Library of photon interaction cross sections | RSIC |

**Table A.4. Radiation Dose Rate Calculation Computer Codes**

| Mainframe computer codes | | | |
|---|---|---|---|
| **Name** | **Descriptive name** | **Type of code** | **Source** |
| CCC-124 | KDLIBE | Kernel-diffusion shielding analysis system | RSIC |
| CCC-246 | TMMS | Gamma ray penetration shielding code system | RSIC |
| CCC-322 | S3 | Kernel integration code with multigroup gamma ray scattering | RSIC |
| CCC-330 | PADLOC | A 1-D, time-dependent program for calculating coolant and plateout fission product concentrations in a network of pipes | RSIC |
| CCC-346<br>CCC-396<br>CCC-401<br>CCC-493 | QAD-BSA<br>QADMOD-G<br>QAD-QC<br>QAD-CGGP | Point-kernel gamma ray shielding code | RSIC |
| CCC-494 | G33-GP | Point source scattering calculation with buildup on first scatter leg | RSIC |
| CCC-579 | MARMER | A flexible point-kernel shielding code | RSIC |

### A.2.4 Verification of Radiation Field Calculations

The radiation dose rate calculations should be verified with field measurements to determine the accuracy of each calculation. The relative difference between the field measurement and the calculation can be used to generate a normalization to the calculated results or to show that the calculated results can be used directly.

### A.2.5 Radiation Dose Rates Review

The determination of the radiation dose rates within a nuclear facility being decommissioned is important for radiological control of activities and identification of materials requiring disposal as radioactive waste.

## A.3 Inventory Determination by Dose Rate Measurement

In Section A.2 above, two types of measurement for the radiation dose rate were described.

The first type is a gross beta-gamma measurement that provides a count rate that may be translated to a dose rate by an external multiplier or internally on the scale of the instrument. This type of instrument can only measure dose rate and can give no information on the identity or concentration of the source radionuclides.

The second type of instrument has an energy sensitive detector, such as a NaI(Tl) detector or a Ge(Li) detector. The NaI(Tl) detector is more sensitive than the Ge(Li) detector, but the NaI(Tl) detector has poorer energy resolution. Nevertheless, both detectors can identify individual radioactive species when connected to a multichannel analyzer with the appropriate identification software. These instruments can be portable and can provide information on the identity and strength of the gamma rays at the detector location (gamma spectrum).

This field gamma spectrum information can be used to calculate the inventory in situ using the following technique. This technique is to determine the relative efficiency of the detector-source combination and has to be known. Standard geometries, such as on a pipe centerline at one diameter away from the outside surface of the pipe, can be set up and their relative efficiency determined; based on several of these tests, a relative pipe diameter-efficiency curve can be plotted and used in the field. Therefore, with the proper precautions and supporting efficiency factors, in situ measurements of the radioactive inventory in certain standard configurations can be determined using NaI(Tl) of Ge(Li) detectors coupled to a multichannel analyzer.

## A.4 Conclusion

The estimation of radioactive inventory in a nuclear facility being decommissioned is a required step to determine the radiological controls necessary during the decommissioning and to provide for the appropriate disposal of the waste material. In almost all cases, computer codes are used in the calculation of the radiation source. One of the radiation sources is the radioactive materials that have been generated by neutron activation of the constituents in the materials surrounding the neutron source. Another source of radioactive materials is the release of radioactivity from the source as a result of failure, corrosion, and other processes. For all of the types of radioactivity contained within the facility, direct measurement of some form or another is necessary to verify the accuracy of the computer model and calculation sequence. Thus, the determination of the magnitude and location of the radioactive sources is verified with direct measurement, and use of that data is acceptable in the decommissioning project.

## A.5 References

Radiation Shielding Information Center. Oak Ridge National Laboratory. Oak Ridge, Tennessee.

# Glossary of Terms

# GLOSSARY OF TERMS

*Activity*: Sometimes used for the *radioactivity*, particularly when referring to an amount of radioactivity (i.e., the number of nuclear transformations occurring in a given quantity of material per unit of time).

*Airborne radioactivity*: Radioactive particulates, mists, fumes, and/or gases in the air.

*ALARA*: A philosophy to maintain exposure to radiation as low as is reasonably achievable.

*Alpha-Bearing waste*: Waste containing alpha-emitting radionuclides.

*Alpha decay*: Radioactive decay in which an alpha particle is emitted. This transformation lowers the atomic number of the nucleus by two and its mass number by four.

*Alpha particles*: The least penetrating but most energetic of radiation types. The particle is positively charged and relatively massive. Because of its size, it may easily be stopped in a few centimeters of air. Alpha-emitting wastes require no shielding. Alpha-emitting nuclides can be dangerous when ingested or inhaled because the particle energy is transferred directly to adjacent cells.

*Background*: The radiation dose received by everyone as a result of living on the Earth. Natural sources of radiation include cosmic rays (25% of total); terrestrial, including inside the body and in the environment (40% of total); and technological sources, including medical X rays, fallout, nuclear facilities (35% of total).

*Beta decay*: Radioactive decay in which a beta particle is emitted.

*Beta particles*: These are charged electrons emitted from the decay of some radioactive elements and are more penetrating than alpha particles. Beta particles can penetrate skin and cause burns. They can travel several meters in air, but the principal hazard still comes from ingestion or inhalation of material that emits beta particles. Depending on the concentration, wastes containing material that emits beta particles may require some level of shielding. Beta particles can be stopped by a thick sheet (up to 1/2 in.) of plastic.

*Biological shield*: A mass of absorbing material placed around a reactor or radioactive source to reduce the radiation to a level that is safe for human beings.

*Boiling water reactor (BWR)*: A reactor in which water is allowed to boil in the core. The resulting steam can be separated from the water and fed to a turbine-generator.

*Characterization*: An information-gathering process usually involving measurement or sampling and analysis of contaminants present.

*Chemical limits*: Maximum concentrations or quantities imposed on chemical releases in gaseous or liquid effluents discharged from a facility and consistent with known air or water quality standards.

*Containment*: A device used to prevent or minimize the spread of contamination, often a plastic enclosure with HEPA-filtered ventilation.

*Contamination*: Radioactive or hazardous material that has been deposited on the surfaces of structures or equipment or that has been mixed with another material.

*Curie (Ci)*: The quantity of a radioactive material that has a disintegration rate of $3.7 \times 10^{10}$ nuclear transformations per second.

*Daughter product*: A nuclide formed by the radioactive decay of another nuclide which, in this context, is called the *parent*.

*Decay, radioactive*: A spontaneous nuclear transformation in which particles and/or gamma radiation is emitted.

*Decommissioning*: Decommissioning occurs at the end of the useful life of a nuclear facility. It involves the removal of sufficient radioactive and hazardous material to allow the restricted or unrestricted release of the facility. For unrestricted release, this activity reduces the risk to human health and the environment to negligible levels.

*Decontamination*: Those activities employed to reduce the levels of radioactive and/or hazardous contamination in or on material, structures, and equipment.

*Decontamination agents*: Those chemical materials used to effect decontamination.

*Decontamination factor (DF)*: Defined as the original amount of radionuclide ($A_o$) divided by the final amount ($A_f$). In some cases, decontamination effectiveness is reported in terms of percent of contamination removed:

$$100\left[\frac{(A_o - A_f)}{A_o}\right] = 100\left(1 - \frac{1}{DF}\right).$$

*De minimis level*: That level of contamination below which regulatory control is not required.

*Disintegration, nuclear*: Spontaneous nuclear transformation (radioactivity) characterized by the emission of energy and/or mass from the nucleus. The process is characterized by a definite half-life.

*Disintegration rate*: The rate at which disintegrations occur, characterized in units of time [i.e., disintegrations per minute (dpm)].

*Dismantlement*: Those actions required to remove material, including radioactive or contaminated material, from the facility.

*Disposal*: The disposition of materials with the intent that the materials will not enter the environment in sufficient amounts to cause a health hazard.

*Dose, occupational*: The exposure of an individual to radiation imposed by employment.

*Dose rate*: The radiation dose delivered per unit time and measured, for instance, in rems per hour.

*Entombment*: The encasement of radioactive materials in concrete or other structural material sufficiently strong and structurally long-lived to ensure retention of the radioactivity until it has decayed to levels that permit restricted release of the site.

*Exposure*: The general result of occupying an area where radiation is incident on the body or where airborne radioactive or hazardous materials are inhaled. The unit for exposure to X- or gamma radiation is the Roentgen (R).

*Facility*: The physical complex of buildings and equipment within a site.

*Fission*: The splitting of a heavy nucleus into two lighter nuclei (nuclides of lighter elements), accompanied by the release of a relatively large amount of energy and generally one or more neutrons. Fission can occur spontaneously; but usually, it is caused by nuclear absorption of gamma rays, neutrons, or other particles.

*Fission products*: The lighter nuclides formed by the fission of heavy elements. The term also refers to the nuclides formed by the fission fragments' radiative decay.

*Gamma radiation*: Electromagnetic radiation of extremely short wavelength similar to X rays. Gamma radiation is highly penetrating. Therefore gamma-emitting nuclides are a hazard both when ingested or inhaled and when external to the body. Heavy materials such as lead (or massive amounts of lighter materials) are effective shields for protection from gamma radiation.

*Half-life*: The time required for half of the original nuclei in a sample of an isotope to decay. Half-lives of radioactive nuclides vary from $<10^{-7}$ seconds to $>10^{10}$ years.

*Half-life, radioactive*: The time in which half the atoms of a particular radioactive substance disintegrate to another nuclear form. Each radionuclide has a unique half-life, and measured half-lives vary from millionths of a second to billions of years.

*Hazardous material*: A substance or material that has been determined by the Secretary of Transportation to be capable of posing an unreasonable risk to health, safety, and property when transported in commerce and that has been so designated.

*Hazardous waste*: As defined in 40 CFR 261, any solid waste; concentration; or physical, chemical, or infectious characteristics that may "(1) cause, or significantly contribute to, an increase in mortality or an increase in serious irreversible or incapacitating reversible, illness; or (2) pose a substantial present or potential hazard to human health or the environment when improperly treated, stored, transported, disposed of, or otherwise managed...."

*High-level waste*: The highly radioactive waste material that results from the reprocessing of spent nuclear fuel.

*Holding time*: The maximum amount of time that a sample can be held before analysis begins.

*Hot spots*: Areas of radioactive contamination of higher than average concentration.

*Immobilization*: Treatment and/or emplacement of material (e.g., radioactive contamination) so as to impede its movement.

*Interim storage*: Storage operations for which (1) monitoring and human control are provided and (2) subsequent action in which final disposition is expected. Concepts for interim storage include bulk or compartmented storage of solid, liquid, and gaseous wastes.

*Ion exchange*: A chemical process involving the absorption or desorption of various chemical ions in a solution onto a solid material, usually a plastic or resin. The process is used to separate and purify chemicals, such as fission products or to adjust the "hardness" of water (i.e., water softening).

*Ionization*: The process by which a neutral atom or molecule acquires a positive or negative charge through the loss or gain of electrons.

*Isotope:* A variation of an element that has the same atomic number but a different weight because of the number of neutrons it carries. Different isotopes of an element may exhibit distinctly different radioactive behaviors.

*Kerf*: The slit or notch made by a saw or cutting torch.

*License*: Formal document issued by a regulatory body for major stages in the development of a nuclear facility defined by regulations permitting the holder (implementing organization) to perform specified activities.

*Low-level waste (LLW)*: Waste that contains radioactivity and is not classified as high-level waste, transuranic waste, spent nuclear fuel, or some by-product material.

*Management, waste*: The planning, execution, and surveillance of essential functions related to control of radioactive hazardous or mixed waste, including treatment, solidification, interim or long-term storage, transportation, and disposal.

*Monitoring*: Taking measurements or observations for recognizing adequacy, significant changes in conditions, or performance of a facility.

*Neutron radiation*: High-energy neutral particles form this radiation. Neutrons can travel long distances in air and other materials and, along with gamma rays, present the greatest hazards for external exposure. Neutron radiation requires special shielding, usually light materials containing hydrogen.

*Nuclide*: A species of atom charaeterized by its mass number, atomic number, and nuclear energy state, provided that the mean life in that state is long enough to be observable.

*Off-site*: Beyond the boundary line marking the limits of plant property.

*Pathway*: A route and sequence of processes by which radioactive material may move through the environment to humans or other organisms.

*Power reactor*: A generator of heat through controlled nuclear fission. Such heat energy, in turn, is used to generate power.

*Pressurized water reactor (PWR)*: A power reactor in which heat is transferred from the core to a heat exchanger by water kept under high pressure to achieve high temperature without boiling in the primary system. Steam is generated in a secondary circuit.

*Primary wastes*: Wastes that are generated as part of the cleanup of existing contaminants. Secondary wastes are generated from a supporting operation such as the use of personal protective equipment.

*Process equipment*: The functional equipment items or systems associated directly with the operation of a chemical or mechanical process.

*Protective clothing*: Special clothing worn by a person in a contaminated area to prevent contamination of his or her body or personal clothing.

*Radiation*: (1) The emission and propagation of radiant energy; for instance, the emission and propagation of electromagnetic waves (X or gamma radiation). (2) The emission and propagation of energetic particles such as alpha particles, beta particles, and neutrons.

*Radioactive material*: Any material or combination of materials that spontaneously emits ionizing radiation.

*Radioactive waste*: Any material containing or contaminated with radionuclides at concentrations greater than the values that competent authorities would consider acceptable in materials suitable for unrestricted use or release and for which there is no foreseen use.

*Radioactivity*: The property of certain nuclides of spontaneously emitting particles of gamma radiation.

*Radioactivity, induced*: Radioactivity produced in a substance after bombardment with neutrons or other particles. Also called *activation.*

*Radiological protection*: Protection against the effects of internal and external human exposure to radiation and to radioactive materials.

*Rem*: A unit of dose equivalent. A rem is numerically equal to the absorbed dose in rads multiplied by the quality factor, the distribution factor, and any other necessary modifying factors.

*Repository*: The site and all facilities where waste disposal takes place.

*Roentgen*: A unit of exposure to ionizing radiation, abbreviated "R."

*Safe storage*: Those actions required to place and maintain a nuclear facility in such a condition that future risk to public safety from the facility is within acceptable bounds and that the facility can be safely stored for as long a time as desired.

*Secondary wastes*: Forms and quantities of all wastes created during the treatment of primary wastes or effluents.

*Shield*: Material used to reduce the passage of particles or radiation. A shield may be designated according to what it is intended to absorb (as a gamma shield or neutron shield) or according to the kind of protection it is intended to give (as a background, biological, or thermal shield). It may be required for the safety of personnel to reduce radiation enough to allow the use of counting instruments.

*Shutdown*: The time during which a site is not in productive operation.

*Site*: The geographic area upon which the facility is located that is subject to controlled public access by the facility licensee (includes the restricted area as designated in the NRC license).

*Solidification*: Conversion of radioactive and/or hazardous wastes (gases or liquids) to dry, stable solids.

*Surface contamination*: Radioactive and/or hazardous material adherent to an otherwise noncontaminated surface.

*Surveillance*: Those activities necessary to ensure that the site remains in a safe condition, including periodic inspection and monitoring of the site, maintenance of barriers that prevent access to radioactive materials left on the site, and prevention of activities on the site that might impair these barriers.

*Survey*: An evaluation of the radiation hazards incident to the production, use, release, disposal, or presence of radioactive materials or other sources of radiation under a specific set of conditions.

*Swarf*: Material (as metallic particles and abrasive fragments) removed by a cutting tool.

*Transuranic elements*: Elements with atomic number (Z number) greater than 92.

*Transuranic waste*: Any waste material measured or assumed to contain more than 100 nCi/g of transuranic elements that emit alpha radiation and have a half-life of greater than 20 yr.

*X-ray*: A penetrating form of electromagnetic radiation emitted either when the inner orbital electrons of an excited atom return to their normal state (characteristic X-rays) or when a metal target is bombarded with high-speed electrons. X-rays are always non-nuclear in origin (i.e., they originate external to the nucleus of the atom).

# INDEX

aerosols 10-1
Air Pollution Control System 8-2, 8-73, 8-81, 8-82, 8-92, 8-96, 8-97, 8-96, 8-102, 8-101, 8-102
asbestos 3-13, 5-10, 6-11, 7-2, 7-6, 7-18, 7-28, 8-51, 8-113, 9-2, 9-34, 9-58, 9-60, 9-70, 10-77, 12-1, 12-3, 12-6, 14-25, 15-17

CERCLA 3-5, 3-7, 3-17, 5-3, 5-8, 5-10, 5-15, 7-29, 8-42, 8-45, 8-106, 9-1, 9-21, 14-1, 14-24
CFR - Title 10
Part 20 5-7, 13-2
Part 30 4-4, 5-4
Part 40 4-4, 5-4
Part 50 4-10, 5-4, 5-7
Part 61 4-4, 5-4, 14-19, 14-22, 14-23
Part 70 4-4, 5-4
Part 72 2-3, 2-4, 4-4, 5-4, 5-7
Characterization 1-1, 1-2, 1-3, 2-1, 2-3, 3-1, 3-3, 3-4, 3-5, 3-14, 4-1, 4-8, 4-14, 4-15, 6-1, 6-5, 6-6, 7-1, 7-3, 7-5, 7-6, 7-7, 7-9, 7-14, 7-15, 7-24, 7-29, 8-63, 8-104, 12-2, 12-5, 12-6, 14-12, 15-1, 15-20, 15-22, 15-23, 15-37, B-2
characterization plan 1-4, 3-8, 3-11, 7-4
final site 3-2, 3-13, 3-16, 6-1, 6-2, 6-9, 6-11, 6-13, 13-6
final site characterization 3-17
final site survey 1-4, 13-6
initial site characterization 6-8, 6-9, 6-13, 7-2, 7-4, 12-5
sampling 1-3, 3-1, 4-7, 7-5, 7-9, 7-11, 7-18, 7-31, 11-1, 11-2, 11-3, 11-7, 11-29, 11-36, 11-37, 12-8, 13-1, 15-22, A-15, A-18
sampling and analysis 3-11, 3-16, 7-1, 7-3, 7-6, 7-13, 7-15, 13-5, 13-6, 14-23, B-2
survey 3-11, 3-12, 3-16, 3-17, 4-3, 4-8, 4-9, 4-10, 4-14, 4-15, 5-6, 5-15, 6-11, 6-14, 7-7, 7-14, 7-17, 7-18, 7-31, 9-79, 11-1, 11-2, 11-7, 11-32, 11-37, 13-5, 15-30, 15-37, B-7

Decontamination factor 8-33, 9-7, 9-8, 9-13, 9-17, 9-25, 9-24, 9-35, 9-65, B-3
Department of Transportation 1-3, 5-1, 5-12, 7- 5, 7-22, 14-3, 14-8, 14-9, 14-10, 14-12, 14-13, 14-14, 14-15, 14-16, 14-17, 14-25, 15-6, 15-23, A-10
design trade-off 2-2

DOE Orders
5400.5 5-1, 7-19, 7-30, 13-2, 13-3, 13-6
5820.2A 1-3, 4-1, 4-17, 5-1, 14-4

emergency 5-5, 5-11, 10-14, 12-3, 14-9, 14-10, 14-14
environmental protection 1-1, 1-4, 3-10, 3-13, 3-17, 4-15, 5-1, 5-2, 5-3, 5-5, 5-8, 5-15, 8-53, 8-104, 9-76, 13-1, 13-6
EPA 1-3, 3-5, 3-13, 3-16, 3-17, 4-8, 4-15, 5-1, 5-4, 5-8, 5-9, 5-11, 5-15, 7-18, 8-1, 8-42, 8-45, 8-104, 8-106, 9-76, 13-1, 13-3, 14-3, 14-10, 14-12, 14-13, 14-14, 14-15, 14-19, 14-22, 14-24, 14-25, 14-26, 15-32

HEPA 8-2, 8-53, 8-96, 8-97, 9-34, 9-48, 9-50, 9-58, 9-70, 10-41, 10-46, 13-1, 13-5, B-2

incineration 3-3, 8-2, 8-1, 8-52, 8-71, 8-73, 8-81, 8-87, 8-88, 8-93, 8-97, 8-116

lead 4-16, 6-6, 6-8, 6-9, 7-1, 7-4, 7-8, 7-18, 7-25, 7-26, 7-27, 8-29, 8-51, 8-52, 8-92, 9-34, 9-35, 9-36, 9-37, 9-41, 9-72, 10-54, 11-36, 12-1, 12-9, 13-1, 13-2, 13-4, 14-13, 15-22, B-4

mercury 7-1, 7-6, 7-17, 7-24, 8-29, 9-35, 9-36, 11-1, 11-5, 12-6, 13-4

NRC 14-3, 14-8, 14-9, 14-13, 14-16, 14-19, 14-22, B-7
DECON 3-2, 4-10, 9-77, 9-78, 10-83
ENTOMB 3-2, 4-10, 4-11, 4-15
license 3-1, 3-17, 3-18, 4-5, 4-8, 4-10, 4-12, 4-14, 4-15, 5-4, 5-6, 5-7, 5-16, 6-13, 8-46, B-5, B-7
SAFSTOR 3-2, 4-10, 4-11, 4-13, 4-15
SNM 3-12, 5-5

OSHA 5-1, 5-11, 5-12

PCB 9-35
personnel protective equipment 6-8, 9-20, 9-34, 9-35, 9-60, 10-12, 10-25, 12-7, 12-8, 15-4, 15-20, 15-21, 15-31, 15-32, 15-31, 15-32

RCRA 3-13, 5-2, 5-8, 5-9, 5-10, 7-2, 7-29, 8-42, 8-45, 8-106, 9-1, 9-6, 9-21, 11-37, 14-1, 14-13, 14-14, 14-23, 14-25, 14-26
Records 2-4, 3-8, 4-1, 4-3, 4-5, 4-6, 4-12, 5-9, 7-4, 7-12, 11-37, 12-2, 14-2, 14-13, 14-15, 15-1
recordkeeping 2-1, 2-2, 2-3

release
restricted B-3
unrestricted 3-1, 3-2, 5-13, 6-1, 6-5, 7-29, 9-2, B-2

S&M 1-3, 2-1, 2-4, 6-1
solidification 8-1, 8-3, 8-1, 8-40, 8-42, 8-45, 8-51, 8-52, 8-53, 8-101, 8-104, 8-106, 8-107, 8-113, 9-16, B-5, B-7

TSCA 5-8, 5-10, 8-108, 14-1, 14-24, 14-25, 14-26

waste
generation 4-3, 4-8, 4-14, 7-29, 7-30, 8-71, 9-15, 10-36, 10-54, 10-59, 11-35, 12-5, 14-13, 15-20, A-1, A-2, A-5, A-7, A-12, A-13, A-14
low-level waste 3-3, 5-5, 6-5, 6-8, 6-9, 6-11, 6-13, 8-58, 11-39, 15-21, 15-23
management 3-3, 4-1, 4-8, 4-13, 4-17, 5-1, 5-7, 5-13, 6-14, 7-30, 8-46, 8-104, 8-105, 8-106, 8-108, 9-1, 9-79, 10-84, 14-4, 14-27, 15-41
minimization 3-7, 3-15, 8-105, 9-28, 15-20, 15-21
mixed waste 1-3, 1-4, 3-3, 4-8, 4-14, 5-1, 5-2, 6-8, 6-9, 7-5, 8-58, 14-1, 14-4, 14-9, 14-19, 14-25, B-5
secondary 9-24, 9-41, 9-69

waste
spent nuclear fuel 1-2, 2-3, 2-4, 5-5, 5-7, 14-3, 14-21, B-4, B-5
TRU 3-3, 7-5, 7-21, 7-26, 11-39, 14-2, 14-3, 14-1, 14-18, 14-19, 14-20, 14-21

worker protection 1-4, 2-3, 3-13, 6-8, 6-9, 6-13, 7-13, 7-16, 9-58, 10-34, 12-1, 12-2, 12-3, 12-4, 12-9