UNITED STATES
NUCLEAR REGULATORY COMMISSION
ADVISORY COMMITTEE ON REACTOR SAFEGUARDS
WASHINGTON, DC 20555 – 0001

March 18, 2011

MEMORANDUM TO: ACRS Members

FROM: Weidong Wang, Senior Staff Engineer ***/RA/***
Reactor Safety Branch B, ACRS

SUBJECT: CERTIFICATION OF THE MINUTES OF THE ACRS SUBCOMMITTEE ON THE AP1000 REACTOR, DECEMBER 1, 2010, ROCKVILLE, MARYLAND

The minutes of the subject meeting were certified on March 11, 2011, as the official record of the proceedings of that meeting. A copy of the certified minutes is attached.

Attachment: As Stated

Cc w/o Attachment: E. Hackett
Y, Dias-Sanabria

UNITED STATES
NUCLEAR REGULATORY COMMISSION
ADVISORY COMMITTEE ON REACTOR SAFEGUARDS
WASHINGTON, DC 20555 – 0001

MEMORANDUM TO: Weidong Wang, ACRS staff

FROM: Harold B. Ray, Chairman
ACRS AP1000 Subcommittee

SUBJECT: CERTIFICATION OF THE MINUTES OF THE ACRS SUBCOMMITTEE ON THE AP1000 REACTOR, DECEMBER 1, 2010, ROCKVILLE, MARYLAND

I hereby certify, to the best of my knowledge and belief, that the minutes of the subject meeting held on December 1, 2010, are an accurate record of the proceedings.

/RA/ ***March 11, 2011***

Harold B. Ray, Chairman *Date*
ACRS AP1000 Subcommittee

Issued: March 11, 2011
Certified By: Harold Ray

REVISION 17 TO AP1000 DESIGN CONTROL DOCUMENT APPLICATION

December 1, 2010
ROCKVILLE, MARYLAND

INTRODUCTION

The Advisory Committee on Reactor Safeguards (ACRS) Subcommittee on the Westinghouse Electric Company's AP1000 advanced pressurized water reactor (PWR) design met in Room T-2B1 at the Headquarters of the U.S. Nuclear Regulatory Commission (NRC), located at 11545 Rockville Pike, Rockville, Maryland, on December 1, 2010. The purpose of this meeting was to review the action items from the previous ACRS review of those select chapters of Revision 17 to the AP1000 DCD and its associated Advanced Final Safety Evaluation Report (FSER). The Subcommittee was briefed by, and held discussions with representatives of Westinghouse Electric Company (WEC) on the AP1000 DCD Amendment and the U.S. Nuclear Regulatory Commission (NRC) on the Advanced FSER. As part of the review process, NRC's regulations under 10 CFR Part 52 direct the staff to consult with the ACRS on safety issues before any reactor design can be certified or any NRC operating license can be approved.

The staff's Advanced FSER was organized based on the chapters found in NUREG-0800, "Standard Review Plan (SRP) for the Review of Safety Analysis Reports for Nuclear Power Plants: LWR Edition." To this end, the Subcommittee planned to gather information, analyze relevant issues and facts, and formulate proposed positions and actions, as appropriate, for deliberation by the full Committee of the ACRS at a later date. This was the twelfth Subcommittee meeting on the AP1000 design.

The Chairman for this ACRS Subcommittee was Mr. Harold Ray. Mr. Weidong Wang was the cognizant ACRS staff engineer for this topic and served as the Designated Federal Official for this meeting. Peter Wen, an ACRS staff engineer, supported this meeting as well. Part of the meeting was closed to public attendance and part of the meeting was open.

ATTENDEES

ACRS

H. Ray, Subcommittee Chairman	S. Abdel-Khalik, Member	J. Sam Armijo, Member
D. Bley, Member	M. Bonaca, Member	J. Rempe, Member
M. Ryan, Member	B. Shack, Member	J. Sieber, Member
S. Banerjee, Member	C. Brown, Member	M. Corradini, Member
D. Power, Member	J. Sibber, Member	G. Wallis, Invited ACRS Consultant
T. Kress, Invited ACRS Consultant	W. Wang, ACRS Staff	P. Wen, ACRS Staff

The NRC Staff

E. McKenna	P. Patel	B. Gleaves
T. Scarbrough	A. HODGDON	D. Terao
P. Buckberg	B. THOMAS	Y. Hsii
P. Clark	T. Galletta	M. Hayes
T. Jackson	J. Donoghue	D. Jaffe
W. Morton	S. Mitra	

Others

D. Wiseman, WEC	E. Cummins, WEC	J. Peterson, WEC
G. Rao,WEC	Y. Sung, WEC	G. Meyer,WEC
R. Wessel, WEC	B. Seelman, WEC	D. Lindgrbn, WEC
C. Piere, SNC	D.Deblasio, WEC	W. Sparkman, SNC
A. Aughtman, SNC	B. Hirmanpour, NuStart	C. Frepoli, WEC
R. Ziesing, WEC	B. Carpenter, WEC	M. Leslie, WEC
A. Fakhar,PSEG	T. Schulz, WEC	R. Ofstun, WEC
M. Melton		

Other Individuals and their affiliations attending this meeting are listed in the sign-in sheets in Attachment 1.

SCHEDULED PRESENTATIONS

The detailed agenda identifying the specific presentation topics comprising this meeting can be found in Attachment 2. Both during and following the scheduled presentations, the speakers responded to specific questions and comments from the ACRS Subcommittee members. The scope of the questions, comments, and the speaker's responses had been captured in the verbatim meeting transcripts and they can be found at the following NRC Internet website location:

http://www.nrc.gov/ reading-rm/doc-collections/acrs/tr/subcommittee/.

Opening Remarks

Subcommittee Chairman Ray made opening remarks. He stated that this AP1000 Subcommittee meeting would continue to review the Safety Evaluation Report on Revision 17 to the AP1000 DCD and matters associated with long-term core cooling, or GSI-191. The goal of this meeting was to complete subcommittee review of the DCD amendment and GSI-191 issues in advance of the discussion of the Full Committee later in the week. The AP1000 Subcommittee previously had 11 meetings totaling 21 meeting days. There were no written comments or requests for time to make oral statements from members of the public regarding this meeting.

Following the opening statement by the Subcommittee chairman, the staff and the applicant made presentations. The briefing slides with non-proprietary and non-security related information can be found in Attachment 3.

Key Points Discussed During the Meeting

Action Item #4 AP1000 Reactor Coolant Pump Flywheel

The applicant summarized Flywheel Retaining Ring Component designs and described the materials characteristics. The applicant stated that, for the base material, a 625 Ni-based alloy enclosure has proven primary water Stress Corrosion Cracking (SCC) resistance. The materials were widely used in higher temperature applications and corrosion data is applicable to potential exposure to primary water conditions. Member Armijo was concerned about whether all of related test data was at boiling water temperature or less. He further commented that all the qualification testing has been done on retaining rings on electric generators, and the generator environment is extremely mild compared to the PWR coolant environment. He suggested that a test to be performed in the reactor prototypic water environment for the materials. He didn't think WEC have any experience of 18Cr-18Mn steel, in a high-stress component application in a BWR, or a PWR. Westinghouse responded that they will do validation testing to evaluate the SCC resistance to this material.

Action Item #55 Squib Valve Equipment Qualification

The applicant had discussed Squib Valve Functional Testing in the past subcommittee meetings. A remaining question was from Member Brown. His concern is summarized as:

"The squib valves are not operationally tested after seismic testing. Therefore, there is no way to know that they will satisfactorily actuate after being subjected to a seismic event."

The applicant summarized the squib valve functions and seismic testing of the valve actuator. The goals of the seismic testing are to demonstrate that the actuator does not operate during a seismic event and that it remains operable following an event. The applicant also summarized squib valve tension bolt seismic qualification testing performed to demonstrate that the tension bolt will not break due to a seismic event, rendering the valve inoperable. Member Brown commented that WEC does not have an adequate post-seismic inspection and testing program for squib valves.

Member Banerjee asked if finite element analyses were performed for stresses that might arise in an earthquake. The applicant responded that the ASME code analysis was done with ANSYS and the results showed that the valve stress are within code limits.

Action Item #10 Flow Uncertainties

WEC addressed ACRS comments/concerns on the evidence that the various measurement uncertainties approximate Gaussian distribution and on the estimate of the flow based on pressure drop measurement in the core, which may not fit the Gaussian criteria. WEC stated that the measurement has multiple error contributors and it believes that the major and most accurate measures of flow do have a Gaussian distribution. For the flow estimated from RV pressure drop, WEC considered it as having a uniform distribution. It has a large uncertainty compared to other estimates and has a low weighting factor in the flow uncertainty evaluation.

Action Item #73 Turbine Overspeed

For Action Item 73, Member Brown was concerned that there was no specific test to confirm that the trip system would prevent exceeding 120% of rated turbine speed as specified in the note following DCD Tier 2, Table 10.2.2, "Turbine Overspeed Protection."

During the meeting, no slides were provided for this topic and the discussion was through the phone mainly with Mr. Keith Schwab of WEC.

Member Brown commented that DCD has two tests in DCD Chapter 14, (100% Load Rejection and Plant Trip from 100% Power) that will demonstrate that the Table 10.2.2 peak transient overspeed value of 108% is not exceeded. However, there are no performance criteria confirming the peak transient overspeed value. WEC proposed to add criteria for not exceeding 108 percent for overspeed. Member Brown commented that this proposal would resolve his concern as far as a commitment to include that in

Chapter 14.

Action Item #60 Passive Containment Cooling Water Film

Action Item 60 is about the water film behavior and water coverage area required for evaporative cooling for passive containment cooling system (PCS). WEC summarized shield building design changes and technical designs for the long-term PCS cooling. They described the PCS water distribution and evaporation tests and results. The tests include water film formation, full-scale water distribution tests, heated flat plate tests, small-scale PCS integral tests, and large-scale PCS integral tests. WES showed two test videos during the meeting.

Action Item #6 DNBR Sensitivity to Inlet Flow Distribution

This item is related to the flow skit. Specifically, the concern was about why 5% flow reduction in DNBR calculation is appropriate in light of the core inlet flow distribution with the flow skirt from CFD prediction and 1/7th scale flow test. WEC showed color graphs for the inlet flow distribution with and without the skirt. In its summary, the flow skirt improves the core flow in the flow distribution and reduces fuel failure vibration. The uniform flow distribution is confirmed with both 1/7 scale tests and CFD predictions. DNBR results for the AP1000 first core in DCD remain conservative with the flow skirt. The value of 5% inlet flow reduction to the hot assembly is consistent with currently approved methodology (WCAP-8054-P-A). The DNBR modeling assumptions will be verified for each core reload.

GSI-191 issues

WEC addressed the remaining issues based on the discussion from the November subcommittee meeting. WEC updated the bounding core pressure drop with the latent fiber amount relationship and demonstrated that large margin exist for AP1000 fuel assembly pressure drops for the fiber amount limit. WEC also addressed member's questions on steam velocities near the top of core and showed counter-current flow results at the upper core plate using the Northwestern Flooding correlation.

Other key technical points discussed during the meeting include:

1. The chance of thin bed occurrence.
2. Effects from the temperature variation, fiber types, and chemicals on fuel assembly pressure drop.
3. The limiting single failure scenario for minimum time to establish debris blockage.

Action Item #65 and #72 Digital I&C issues

Action Item 65 concerns the measures taken to ensure that the Protection and Safety Monitoring System (PMS) are capable of operating under maximum loading conditions and the operation of the PMS's Watchdog Timer. The staff stated its understanding that the WEC is committed to add information to Tier 1 with an ITAAC design Commitment 11 for the PMS hardware and software development process. The staff also presented the proposed language for the ITTACs by WEC.

Action Item 72 consists of: 1) the status of the Automatic Depressurization System (ADS)

“block” signal and 2) the diverse Actuation System (DAS) Out of Service (OOS) time issue. For the status of the ADS “block” signal, the staff stated that it had requested the WEC to provide a logic diagram depicting how and where the ADS block signal interfaces with the PMS and its related analysis. WEC commented that WEC doesn't have a final design yet. The staff had received the commitments from WEC on this design. For the question on OOS time for DAS systems, the staff stated that the design was certified in Revision 15 of the DCD. The staff and WEC also discussed Members' concern on the risk of OOS at the same time for the automatic DAS and manual DAS.

Closing Remark

At the end of the meeting, Chairman Ray summarized that all action items in the action item table were addressed.

Attachments

1. Sign-In Sheets
2. Meeting Agenda
3. Presentation Slides from Open Sessions

Attachment 1

ADVISORY COMMITTEE ON REACTOR SAFEGUARDS

SUBCOMMITTEE MEETING ON AP1000

December 1, 2010
Date

PLEASE PRINT

	NAME	AFFILIATION
1	DALE WISEMAN	WESTINGHOUSE
2	JEFF PETERSON	WESTINGHOUSE
3	GUTTI RAO	WESTINGHOUSE
4	Yixing Sung	Westinghouse
5	Gregory Meyer	Westinghouse
6	Ron Wessel	Westinghouse
7	BOB SEELMAN	WESTINGHOUSE
8	D.A. LINDGREN	WESTINGHOUSE
9	Chuck Pierce	Southern Nuclear
10	~~Yixing Sung~~	~~Westinghouse~~
11	JOHN DEBLASIO	WESTINGHOUSE
12	Nels Sparkman	SNC
13	Amy Aughtman	SNC
14	Bob Hirmanpour	NuStart
15	CESARE FREPOLI	WESTINGHOUSE
16	ROLF ZIESING	Westinghouse
17	BRAD CARPENTER	WESTINGHOUSE
18	MEGHAN LESLIE	WESTINGHOUSE
19	ALI FAKHAR	PSEG
20	~~Paul~~	
21	GIUSEPPE SCADDOZZO	ANSALDO NUCLEARE
22	TERRY SCHULZ	WESTINGHOUSE
23	Thomas A. Kindred	Westinghouse
24	ED CUMMINS	"
25	Rick Ofstun	"
26	Mike Melton	WBL
27		
28		

Attachment 1

ADVISORY COMMITTEE ON REACTOR SAFEGUARDS

SUBCOMMITTEE MEETING ON AP1000

December 1, 2010
Date

NRC STAFF SIGN IN FOR ACRS MEETING

PLEASE PRINT

	NAME	NRC ORGANIZATION-
1	Prawin Patel	NRO / DE
2	Billy Gleaves	NRO/DNRL
3	Eileen McKenna	NRO/DNRL
4	Thomas Scarbrough	NRO/DE
5	Jim Stanisha	NRO/DE
6	ANN HODGDON	OGC/NRP
7	David Terao	NRO/DE
8	Perry Buckberg	NRO/DNRL
9	BRIAN THOMAS	NRO/DE/GEB1
10	Y. Gene Hsii	NRO/DSRA/SRSB
11	Phyllis Clark	NRO/NWE2
12	Thomas Galletta	NRO/DNRL
13	Michelle Hayes	NRO/DSRA
14	Terry Jackson	NRO/DE
15	Joe Donoghue	NRO
16	~~Seung Min~~	~~NRR/DER~~
17	David Jaffe	NRO/DNRL/NWE2
18	Wendell Morton	NRO/DE/ICE1
19	S.K. Mitra	NRO/DNRL/NWE2
20	~~ED CUMMINS~~	"
21	~~Naeem IQBAL~~	~~NRR/DRA/AFRB~~
22		
23		
24		
25		
26		
27		
28		

Advisory Committee on Reactor Safeguards 11/30
Meeting of the Subcommittee on the
Westinghouse AP1000 DCD
Rockville, MD
December 1, 2010

- Agenda -

Cognizant Staff Engineers: Weidong Wang (301-415-6279, Weidong.Wang@nrc.gov)
Peter C Wen (301-415-2832, Peter.Wen@nrc.gov)

Item	Topic	Presenter(s)	Time
1	Opening Remarks and Objectives	Harold B. Ray, ACRS	8:30 a.m. – 8:35 a.m.
2	NRC Feedback on Tier 2* for chapter 3 and item 72 (OPEN)	NRC- Eileen McKenna, Billy Gleaves, Terry Jackson	8:35 a.m.-9 a.m.
3	Other action items (4, 10, 55,73, status re 65 and 71 documents) applicant (OPEN)	W	9:00 a.m. – 10:15 am.
	Break		10:15a.m -10:30 am
4	Action item 60 (containment wetting) (CLOSED)	W	10:30a.m-11:00am
5	Action item 6 (RCS inlet flow) (CLOSED)	W	11:30am -noon
	Lunch		Noon-1pm
6	Long-term cooling (GSI-191) questions (CLOSED)		1-1:30pm
	Closing remarks	Harold Ray	

U.S.NRC

United States Nuclear Regulatory Commission

Protecting People and the Environment

Presentation to the ACRS SubCommittee

Westinghouse AP1000 Design Certification Amendment Application Review

Seismic Design Requirements – Controls

December 1, 2010

Outline

- REVISON 15
- TIER 2* IN REVISION 15
- CHANGES FOR REVISION 17 (AND 18)
- STATUS OF STAFF REVIEW

Revision 15

- Revision 15 had seismic design information in Tier 1, Tier 2* and the majority as Tier 2
- Tier 1 section 3.3 (Buildings)

  - design basis loads

  - key dimensions

  - critical sections

  - figures
- Tier 2* designation for information in sections 3.7, 3.8 and 3H, for information such as descriptions, criteria, member forces, required plate thicknesses, stress results

Tier 2* in Revision 15 (and Appendix D to Part 52)

- Specific information is marked as tier 2*, requiring prior NRC approval if a COL wants to change it
- Broadly listed in the DC rule as:
  - Nuclear Island Structural dimensions
  - Design summary of critical sections
  - Use of ACI-318, 349, and AISC-690
  - Definition of critical locations and thicknesses
  - Seismic qualification methods and standards
  - Piping design acceptance criteria

Changes for Revision 17 (and 18)

- Due to reanalysis for range of soil conditions, and new design for shield building, the specific Tier 2* details needed to updated
- Realization that Tier 2* application to member forces and stress results was overly restrictive
- As part of RAI responses, submittal of shield building report, Westinghouse proposed DCD markups to reflect new design and analysis information, including subset to be designated as tier 2*

Staff Review

- Staff technical review focused on information in technical reports
- Staff general agreement about Tier 2* for critical sections, required reinforcements, but not on stress results
- Staff is in process of detailed review of W proposals, as planned for Revision 18
- Any changes would be reflected in future DCD revision

Construction Oversight

- COL application of change control processes
- Engineering Design Verification Inspection
- Construction Inspection Program
- ITAAC Inspection Program

AP1000 Reactor Coolant Pump Flywheel Action #4 Closure

December 1st, 2010

Westinghouse

Safety of the Flywheel Retaining Ring Component

- Locked rotor analyses completed and reviewed and accepted by NRC staff
- Safety consequences accepted
- Risk assessment accepted
- A625 Ni-based alloy enclosure has proven primary water SCC resistance
- Low service temperature (300F design)
- Materials
  - Austenitic stainless steel – not duplex structure, no martinsitic structure
  - Manganese is austenitic stabilizer to address cold work
  - Immune to boric acid corrosion
  - Widely used in higher temperature primary water applications
  - Corrosion data applicable to potential exposure to upset primary water conditions

Westinghouse

Back-up Slides

AP1000 RCP Outline

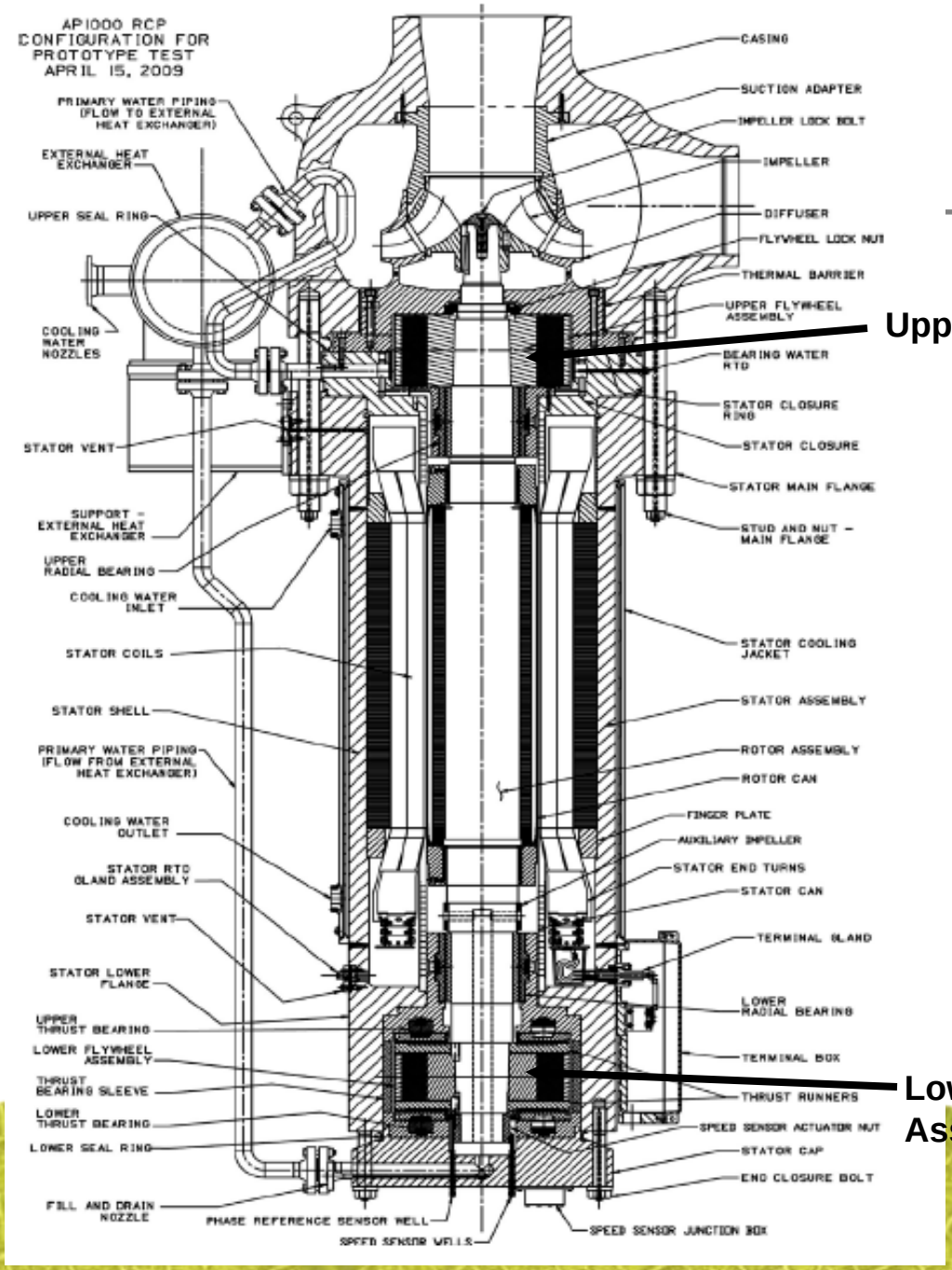

Upper Flywheel Assembly

Lower Flywheel Assembly

Flywheel Configurations

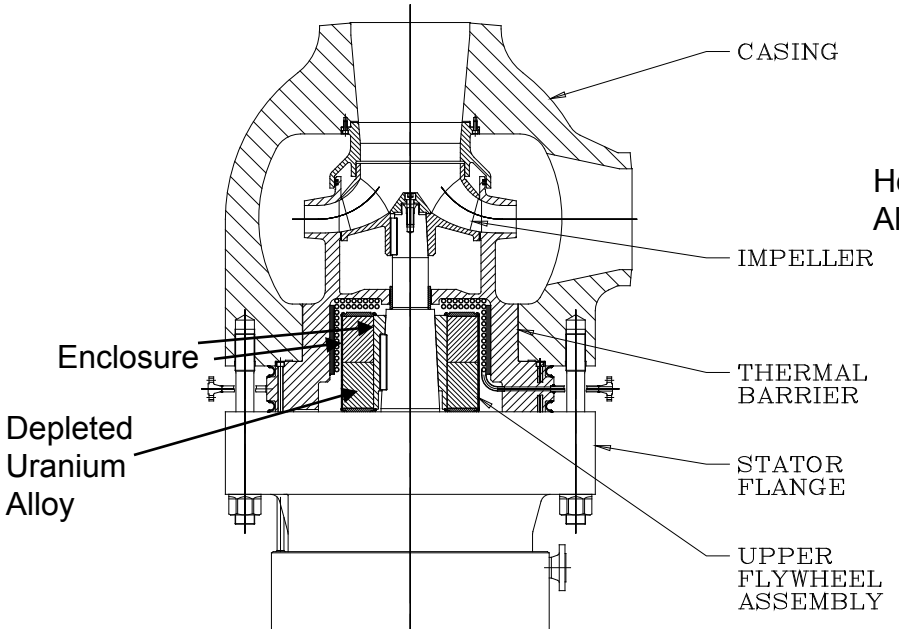

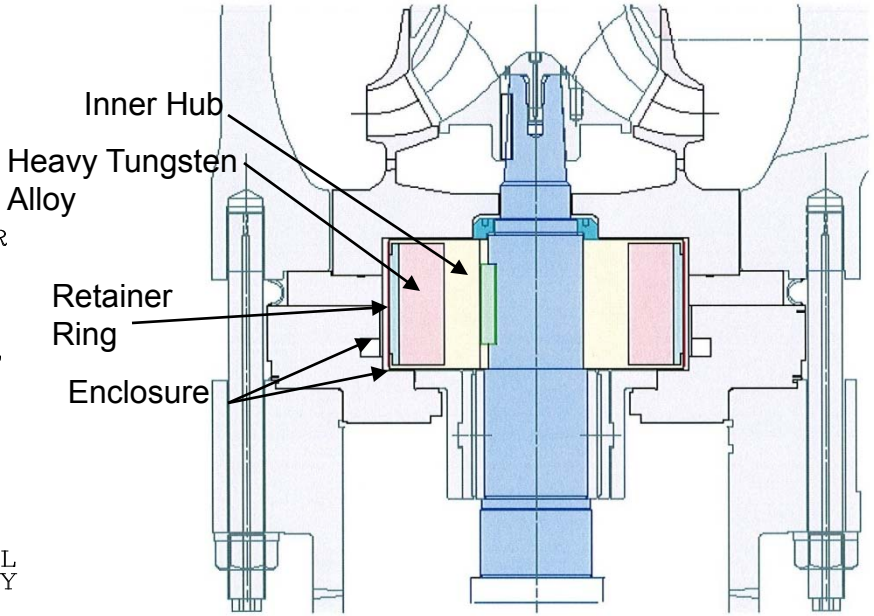

<u>DCD Revision 15</u>
Depleted Uranium Alloy
Enclosure

<u>DCD Revision 17</u>
Inner Hub
Heavy Tungsten Alloy
Outer Retainer Ring
Enclosure Plates and Shell

Flywheel Materials

	Shaft	Inner Hub	Flywheel	Retainer Ring	Enclosure
DCD Rev 15	403 SST	N/A	Depleted Uranium Alloy U-2Mo	N/A	Alloy 690
DCD Rev 17	403 SST	403 SST	Tungsten Heavy Alloy	18 Ni Maraging Steel	Alloy 625
Post DCD R17 (RAI 5/09)	403 SST	403 SST	Tungsten Heavy Alloy	18Cr-18Mn	Alloy 625

Westinghouse

Flywheel Materials Specifications

	Shaft	Inner Hub	Flywheel	Retainer Ring	Enclosure
DCD Rev 15	ASTM 336 – Gr F6	N/A	Design Spec Specified	N/A	ASTM B168 and B564
DCD Rev 17	ASTM 336 – Gr F6	ASTM 336 – Gr F6	ASTM B777 Class 4	AMS 6519	ASTM B443 and B564
Post DCD R17 (RAI 5/09)	ASTM 336 – Gr F6	ASTM 336 – Gr F6	ASTM B777 Class 4	ASTM A289	ASTM B443 and B564

Westinghouse

Discussion of Material Changes

- **High Density Flywheel Material Change – Depleted Uranium to Tungsten Heavy Alloy**
  - Increase in Required Inertia - As the RCP Design was Finalized, Friction Losses Increased Due to Increased Power Requirements, Detailed Loss Calculations, etc.
  - Depleted Uranium was Structural Component – Increase in Inertia Required Increase in Diameter Which Resulted in High Stress Levels
  - Evaluated Alternate Materials – Tungsten Heavy Alloy
    - Advantages of Tungsten Heavy Alloy – Multiple Suppliers, Known Material Properties/Fracture Toughness (ASTM), Volumetric Examinations Standard, No Environmental/Health Issues, Owning/Handling Not Regulated
  - DCD Revision 17 Flywheel Configuration Changed Such that High Density Material is Not a Structural Part
    - Retainer Ring Holds Tungsten Heavy Alloy Segments, Only Structural Components are Ring and Inner Hub

Westinghouse

Discussion of Material Changes (Con.)

- Flywheel Enclosure
  - Change from Alloy 690 to Alloy 625
  - Advantages of Alloy 625 – Lower Coefficient of Thermal Expansion (Reduces Stresses in Enclosure); Higher Yield Strength; Easier to Weld
- Retainer Ring
  - DCD Revision 17 – 18 Ni Maraging Steel for High Strength
    - Flywheel Mockup for Manufacturability and Demonstrate Balancing
      - Cracked Retainer Ring
      - Hydrogen Embrittlement/Stress Corrosion Cracking
  - Retainer Ring Material Change Included in Response to RCP RAI in May 2009
    - Ring Changed to18Cr-18Mn
    - Material Developed for Retainer Ring Applications in Generators Because of Cracking in the Materials in Use (18Mn-5Cr)
    - Not Susceptible to Corrosion or Hydrogen Assisted Stress Corrosion Cracking
    - Lower Strength Requires Thicker Retainer Ring, Reduces Tungsten Alloy Mass

Westinghouse

Summary of Inertia Changes

	Rotating Inertia ($lb\text{-}ft^2$)	Reason for Change
DCD Rev 15	16,500	
DCD Rev 17	23,510	Detailed Design-Additional Losses
Post DCD R17 (RAI 5/09)	23,110	Change in Retainer Ring Reduced Tungsten Volume/Mass

- Flow Coastdown Requirements in Design Spec Have Not Changed
- Calculated Pump Coastdown Flows Have Always Been Higher Than Those Used in the Safety Analyses

Westinghouse

Flywheel Inspection/Testing Requirements

- Each Structural Component Inspected Prior to Final Assembly According to Requirements In Section III, NB-2500 of ASME Code
  - Inner Hub
    - Ultrasonic Examination
    - Magnetic Particle Examination
    - Liquid Penetrant Examination of Inside Surface After Finishing Operations
  - Retainer Ring
    - Liquid Penetrant Examination
    - Ultrasonic Examination
    - Liquid Penetrant Examination of Outside Surface After Finishing Operations
  - Enclosure (Non-Structural)
    - Dye Penetrant of Welds
    - Enclosure Leak Tested
- Impact Testing – Inner Hub and Retainer Ring Material
- No In-Service Inspection Required
  - Postulated Flywheel Missiles are Contained Within the Pressure Boundary
  - In-Service Inspection of the Flywheel Would Require Pump Removal, Disassembly, and Removal of Flywheel Enclosures
  - High Radiation Exposure

Westinghouse

Flywheel Missile Analyses

- Follows Procedure Used for Turbine Disk Fractures (Hagg and Sankey, "The Containment of Disk Burst Fragments by Cylindrical Shells")
  - Stage 1 – Inelastic Impact and Transfer of Momentum to the Pressure Boundary (PB)
  - Stage 2 – Dissipation of Energy in Plastic Tensile Strain in the PB
  - Calculation Assumptions
    - Ignore the Retainer Ring and Enclosure Components
    - Minimum ASME Material Strength Properties @ Design Temperature
    - All Heavy Alloy Segments Impact the PB
    - Upper Flywheel – Check Penetration Through Thermal Barrier and Stator Closure
    - Lower Flywheel – Check Penetration Through Stator Lower Flange
  - DCD Rev 17 Minimum Margin is 1.8 for Upper Flywheel Stage 2
  - Minimum Margin for Flywheel Design Change in Retainer Ring Material (May 2009 RAI Response) Increased to 2.0 for Upper Flywheel Stage 2 Due to Small Changes in Tungsten Alloy Segments and Pressure Boundary

Westinghouse

AP1000 Reactor Coolant Pump Flywheel

April 2010

Westinghouse

Purpose

- Respond to ACRS request for information on the reactor coolant pump (RCP) flywheel failure frequency used in the AP1000 Probabilistic Risk Assessment (PRA) model

Westinghouse

AP1000 PRA Model Information

- AP1000 PRA does not model the failure of the RCP flywheel
  - Not modeled as an initiating event
  - Not modeled as a consequence of another initiating event or as a random failure during another initiating event
- A RCP flywheel failure frequency has not been used in the AP1000 PRA model

Westinghouse

AP1000 PRA Model Information

- Not explicitly considering the failure of the RCP flywheel is consistent with current operating plant PRA models
- RCP flywheel failure is considered a very low probability event
- RCP flywheel failure could result in:
  - A transient event
  - A loss of coolant accident (LOCA) if the reactor coolant system is damaged

Westinghouse

AP1000 PRA Model Information

- The frequencies of transient events and LOCAs from other sources is much larger than from RCP flywheel failures, therefore:
  - the impact on plant risk is negligible
  - RCP flywheel failure is not explicitly modeled

Westinghouse

U.S.NRC
UNITED STATES NUCLEAR REGULATORY COMMISSION
Protecting People and the Environment

Staff Presentation to the ACRS Subcommittee

AP1000 Design Certification Amendment Review
Chapter 7,"Instrumentation and Controls"

ACRS Action Items 65 and 72

Terry Jackson, Chief
Instrumentation, Controls and Electrical Engineering Branch One

William Roggenbrodt
Technical Lead for Instrumentation and Controls Review for the AP1000

December 1, 2010

ACRS Action Items 65 and 72

Purpose

- Brief the ACRS on the current status of the
  - AP1000 safety system loading issue
  - Automatic Depressurization System (ADS) valve block signal and
  - Diverse Actuation System (DAS) attributes

Outcome

- ACRS understands current staff position related to the items captured above

Process

- Via slide presentation and discussion

ACRS Action Item 65

Background

- The Action Item consists of two parts:
  - The measures taken to ensure the Protection and Safety Monitoring System (PMS) is capable of operating under maximum loading conditions
  - The operation of the PMS's Watchdog Timer (WDT)
    - The WDT issue is considered resolved

ACRS Action Item 65

Current Status

- The staff understands Westinghouse (WEC) committed to add information to Tier 1, Chapter 2, Section 2.5.2, Table 2.5.2-8, Inspections, Tests, Analyses and Acceptance Criteria (ITAAC) Design Commitment (DC) 11 – PMS Hardware and Software Development Process
- The language is expected to be incorporated into the acceptance criteria portion of the
  - **Table 2.5.2-8, DC 11d – System Integration and Test Phase**
- The staff finds the language acceptable

ACRS Action Item 65

Proposed Language in Red

Table 2.5.2-8 (cont.) Inspections, Tests, Analyses, and Acceptance Criteria

Design Commitment	Inspections, Tests, Analyses	Acceptance Criteria
11. The PMS hardware and software is developed using a planned design process which provides for specific design documentation and reviews during the following life cycle stages: a) Hardware and software development phase, consisting of hardware and software design and implementation b) System integration and test phase c) Installation phase	Inspection will be performed of the process used to design the hardware and software.	A report exists and concludes that the process defines the organizational responsibilities, activities, and configuration management controls for the following: a) Documentation and review of hardware and software. b) Performance of system tests and the documentation of system test results, including a response time test will be performed under maximum CPU loading to demonstrate that the PMS can fulfill its response time criteria. c) Performance of installation tests

ACRS Action Item 72

Background

- The Action Item consists of two parts:
  - Status of the Automatic Depressurization System (ADS) “block” signal, and
  - The following Diverse Actuation System (DAS) attributes
    - Two out of two (2oo2) voting logic
    - 30-day Technical Specification for Manual DAS out of service (OOS) time
    - 14 day reporting time for Auto DAS OOS time

ACRS Action Item 72

ADS Block Signal – Current Status

- The staff required the addition of
  - A Logic Diagram depicting how and where the ADS block signal interfaces with the PMS
  - A basic analysis or discussion demonstrating why the addition of this circuit does not impede the ADS valves from completing their design function
  - Clarifying language added into the AP1000 DCD
- The staff received commitments from WEC that added clarifying language within the amended AP1000 Design Control Document (DCD) and other secondary references.
- The staff considers this issue resolved

ACRS Action Item 72

DAS Attributes – Current Status

- Concerning the DAS Attributes
  - The 2oo2 Logic for the DAS was certified in Revision 15 of the AP1000 DCD
  - The 30-day OOS time for Manual DAS Functions was certified in Revision 15 of the AP1000 DCD – Chapter 16 Review
  - The 14-day OOS time for Automatic DAS Functions was certified in Revision 15 of the AP1000 DCD – Chapter 16 Review

Summary

- WDT Issue – Resolved
- PMS Maximum Loading Issue – Resolved
- ADS Block Signal – Resolved
- DAS Attributes
  - **2oo2 Logic for the DAS**
    certified in Revision 15 of the AP1000 DCD
  - **30-day OOS time for Manual DAS Functions**
    certified in Revision 15 of the AP1000 DCD
  - **14-day OOS time for Automatic DAS Functions**
    certified in Revision 15 of the AP1000 DCD