APPLIED RESEARCH ASSOCIATES, INC.

Br 2

March 4, 2011

LL 31434
03038428
03620

Ms. Betsy Ullrich, MS, CHP
Licensing Assistance Team
Division of Nuclear Material Safety
U.S. Nuclear Regulatory Commission, Region 1
475 Allendale Road
King of Prussia, PA 19406-1415

(44-31434-01)

Ms. Ullrich:

Please find enclosed our Application for Materials License that we have discussed by telephone and email, and that I faxed to your attention for preview. A $3500.00 check for our application fee is also enclosed.

If you have any questions or require further information regarding the application, please do not hesitate to contact me at (802) 728-7428.

Sincerely,

John W. Haas, III
Vice President
New England Division Manager

REC'D IN LAT MAR 15 2011

574649
NMSS/RGN1 MATERIALS-002

250 BEANVILLE ROAD RANDOLPH, VT 05060
(802) 728-4588 FAX (802) 728-7490

NRC FORM 313 (3-2009) 10 CFR 30, 32, 33, 34, 35, 36, 39, and 40

U.S. NUCLEAR REGULATORY COMMISSION

APPLICATION FOR MATERIALS LICENSE

APPROVED BY OMB: NO. 3150-0120 **EXPIRES: 3/31/2012**

INSTRUCTIONS: SEE THE APPROPRIATE LICENSE APPLICATION GUIDE FOR DETAILED INSTRUCTIONS FOR COMPLETING APPLICATION. SEND TWO COPIES OF THE ENTIRE COMPLETED APPLICATION TO THE NRC OFFICE SPECIFIED BELOW.

APPLICATION FOR DISTRIBUTION OF EXEMPT PRODUCTS FILE APPLICATIONS WITH:

OFFICE OF FEDERAL & STATE MATERIALS AND
ENVIRONMENTAL MANAGEMENT PROGRAMS
DIVISION OF MATERIALS SAFETY AND STATE AGREEMENTS
U.S. NUCLEAR REGULATORY COMMISSION
WASHINGTON, DC 20555-0001

ALL OTHER PERSONS FILE APPLICATIONS AS FOLLOWS:

IF YOU ARE LOCATED IN:

ALABAMA, CONNECTICUT, DELAWARE, DISTRICT OF COLUMBIA, FLORIDA, GEORGIA, KENTUCKY, MAINE, MARYLAND, MASSACHUSETTS, NEW HAMPSHIRE, NEW JERSEY, NEW YORK, NORTH CAROLINA, PENNSYLVANIA, PUERTO RICO, RHODE ISLAND, SOUTH CAROLINA, TENNESSEE, VERMONT, VIRGINIA, VIRGIN ISLANDS, OR WEST VIRGINIA, SEND APPLICATIONS TO:

LICENSING ASSISTANCE TEAM
DIVISION OF NUCLEAR MATERIALS SAFETY
U.S. NUCLEAR REGULATORY COMMISSION, REGION I
475 ALLENDALE ROAD
KING OF PRUSSIA, PA 19406-1415

IF YOU ARE LOCATED IN:

ILLINOIS, INDIANA, IOWA, MICHIGAN, MINNESOTA, MISSOURI, OHIO, OR WISCONSIN, SEND APPLICATIONS TO:

MATERIALS LICENSING BRANCH
U.S. NUCLEAR REGULATORY COMMISSION, REGION III
2443 WARRENVILLE ROAD, SUITE 210
LISLE, IL 60532-4352

ALASKA, ARIZONA, ARKANSAS, CALIFORNIA, COLORADO, HAWAII, IDAHO, KANSAS, LOUISIANA, MISSISSIPPI, MONTANA, NEBRASKA, NEVADA, NEW MEXICO, NORTH DAKOTA, OKLAHOMA, OREGON, PACIFIC TRUST TERRITORIES, SOUTH DAKOTA, TEXAS, UTAH, WASHINGTON, OR WYOMING, SEND APPLICATIONS TO:

IL 31434

NUCLEAR MATERIALS LICENSING BRANCH
U.S. NUCLEAR REGULATORY COMMISSION, REGION IV 030
612 E. LAMAR BOULEVARD, SUITE 400 03620
ARLINGTON, TX 76011-4125
(44-31434-01)

PERSONS LOCATED IN AGREEMENT STATES SEND APPLICATIONS TO THE U.S. NUCLEAR REGULATORY COMMISSION ONLY IF THEY WISH TO POSSESS AND USE LICENSED MATERIAL IN STATES SUBJECT TO U.S.NUCLEAR REGULATORY COMMISSION JURISDICTIONS.

1. THIS IS AN APPLICATION FOR *(Check appropriate item)*
   - [x] A. NEW LICENSE
   - [ ] B. AMENDMENT TO LICENSE NUMBER _____
   - [ ] C. RENEWAL OF LICENSE NUMBER _____

2. NAME AND MAILING ADDRESS OF APPLICANT *(Include ZIP code)*
   Applied Research Associates, Inc.
   250 Beanville Rd.
   Randolph, VT 05060

3. ADDRESS WHERE LICENSED MATERIAL WILL BE USED OR POSSESSED
   Applied Research Associates, Inc.
   250 Beanville Rd.
   Randolph, VT 05060

4. NAME OF PERSON TO BE CONTACTED ABOUT THIS APPLICATION
   Dr. John Haas
   TELEPHONE NUMBER
   (802) 728-7428

SUBMIT ITEMS 5 THROUGH 11 ON 8-1/2 X 11" PAPER. THE TYPE AND SCOPE OF INFORMATION TO BE PROVIDED IS DESCRIBED IN THE LICENSE APPLICATION GUIDE.

5. RADIOACTIVE MATERIAL
   a. Element and mass number; b. chemical and/or physical form; and c. maximum amount which will be possessed at any one time.

6. PURPOSE(S) FOR WHICH LICENSED MATERIAL WILL BE USED.

7. INDIVIDUAL(S) RESPONSIBLE FOR RADIATION SAFETY PROGRAM AND THEIR TRAINING EXPERIENCE.

8. TRAINING FOR INDIVIDUALS WORKING IN OR FREQUENTING RESTRICTED AREAS.

9. FACILITIES AND EQUIPMENT.

10. RADIATION SAFETY PROGRAM.

11. WASTE MANAGEMENT.

12. LICENSE FEES *(See 10 CFR 170 and Section 170.31)*
    FEE CATEGORY **3M** AMOUNT ENCLOSED **$ 3,500.00**

13. CERTIFICATION. *(Must be completed by applicant)* THE APPLICANT UNDERSTANDS THAT ALL STATEMENTS AND REPRESENTATIONS MADE IN THIS APPLICATION ARE BINDING UPON THE APPLICANT.

THE APPLICANT AND ANY OFFICIAL EXECUTING THIS CERTIFICATION ON BEHALF OF THE APPLICANT, NAMED IN ITEM 2, CERTIFY THAT THIS APPLICATION IS PREPARED IN CONFORMITY WITH TITLE 10, CODE OF FEDERAL REGULATIONS, PARTS 30, 32, 33, 34, 35, 36, 39, AND 40, AND THAT ALL INFORMATION CONTANED HEREIN IS TRUE AND CORRECT TO THE BEST OF THEIR KNOWLEDGE AND BELIEF.

WARNING: 18 U.S.C. SECTION 1001 ACT OF JUNE 25, 1948 62 STAT. 749 MAKES IT A CRIMINAL OFFENSE TO MAKE A WILLFULLY FALSE STATEMENT OR REPRESENTATION TO ANY DEPARTMENT OR AGENCY OF THE UNITED STATES AS TO ANY MATTER WITHIN ITS JURISDICTION.

CERTIFYING OFFICER -- TYPED/PRINTED NAME AND TITLE	SIGNATURE	DATE
Dr. John W. Haas, III Vice President		3/3/11

FOR NRC USE ONLY

TYPE OF FEE	FEE LOG	FEE CATEGORY	AMOUNT RECEIVED	CHECK NUMBER	COMMENTS
			$		
APPROVED BY				DATE	

574649

APPLICATION FOR MATERIAL LICENSE
SUPPLEMENTARY SHEET
Applied Research Associates, Inc.

Section 5 – Radioactive Material

Two (2) commercial neutron generators to be received from Idaho National Laboratory, Idaho Falls, ID. These are Genie 16C Compact generators manufactured by Sodern in France. Each generator contains 3.3Ci tritium. Specification sheets and the applicable SSD Registration Certificate for these sources are attached to this application.

Also, one (1) sealed 0.17Ci Technecium-99 source to be procured from Oak Ridge National Laboratory:

Mitch Ferren (865-574-6602)
Isotope Business Office
Oak Ridge National Laboratory
Managed by UT-Battelle, LLC for the Department of Energy
P. O. Box 2008
Oak Ridge, TN 37831-6426

We will procure the source using DOE Form CA-10.90.COM Rev 3 "Isotope and Technical Service Order Form." A quotation from ORNL is attached to this supplementary sheet.

Section 6 – Purpose for Which Material Will be Used

The generators are a component of the Remote Stand-off Explosives Detection System (RSEDS) we received from Idaho National Laboratory for further *Research & Development (R&D)* studies on detecting explosives concealed in vehicles. We are also using the generators for another R&D study investigating the enhanced detection of Technecium-99 residues in pipes for the U.S. Department of Energy. That is also the study for which we need the Technecium-99 source identified in Section 5. The use involves simple irradiation of the Technecium-99 by the neutron generators and measurement of the resulting gamma rays with various types of detectors. All of these experiments can be conducted without disrupting the packaging of the radioactive source in any way. The sources will be used in accordance with the corresponding SSDs.

Section 7 – Individual Responsible for Radiation Safety Program and Their Training Experience

Mr. James McSparran, Facility Safety Officer for ARA's Randolph, VT facility will be the Radiation Safety Officer responsible for the Radiation Safety Program. Mr. McSparran is a former EOD specialists who is already HAZMAT trained and is responsible for all safety in the Vermont facility. The proposed RSO will successfully complete additional radiation safety training specific to the handling of radioactive

sources (Technecium-99) and operation of the Genie neutron sources prior to receipt of the sources. The latter will be adapted from the NUREG 1556 Licensing Guide. Future RSOs will likewise complete this training.

In addition to Mr. McSparran, authorized users will include Drs. John Haas and Robert August. Dr. Haas was formerly with Oak Ridge National Laboratory and has worked on R&D of new radiation detectors for nearly 20 years. Dr. August holds a Ph.D. in experimental nuclear physics from Duke University and spent 21 years with the U.S. Naval Research Lab (NRL) as a research physicist experimenting with all types of radiation detectors and sources and also held the position of Chairman of the NRL Radiation Safety Committee.

Both Drs. Haas and August will successfully complete neutron source training.

Section 8 – Training for Individuals Working In or Frequenting Restricted Areas

The source area will be restricted to individuals working in the area. Before using licensed materials, authorized users will have successfully completed training as described in and adapted from the NUREG 1556 Licensing Guide, with the ARA training developed using the Appendix J guidance to develop a training program that meets or exceeds these minimum guidelines. All users will be required to have initial training, annual refresher training, and training upon a change in duties. Training will be provided by the RSO, who will be trained to deliver this service by an NRC approved training service provider. Current authorized users are listed in Section 7.

Section 9 – Facilities and Equipment

The RSEDS experimental system is being set up in a concrete walled storage bay with limited (locked) access. This will serve as our secure laboratory for the equipment, sources, and experiments – including all receipt, storage, preparation, and measurement activities. The facility as a whole is a secured (locked) facility with employee-only access without escort. Public Dose and Operating and Emergency requirements are met in the designated laboratory area. The Technecium-99 will be stored in a lead box when not in experimental use.

Section 10 – Radiation Safety Program

The proposed RSO has established a Radiation Safety Program for ARA's Randolph, VT facility. The Radiation Safety Program is based on the annual audit program in the NUREG 1556 Licensing Guide and meets radiation monitoring, material receipt and accountability, occupational and public dose, safe use and emergency procedures, and survey requirements of NUREG - 1556, Vol. 7, 'Program-Specific Guidance About Academic, Research and Development, and Other Licenses of Limited Scope,' dated December 1999.

Section 11 – Waste Management

The neutron generators are required to be returned to the manufacturer 10 years after purchase. For the Technecium-99 source we will use the model waste procedures published in Appendix T to NUREG - 1556, Vol. 7, 'Program-Specific Guidance About Academic, Research and Development, and Other Licenses of Limited Scope,' dated December 1999.

SODERN
NEUTRON GENERATOR
GENIE 16 COMPACT

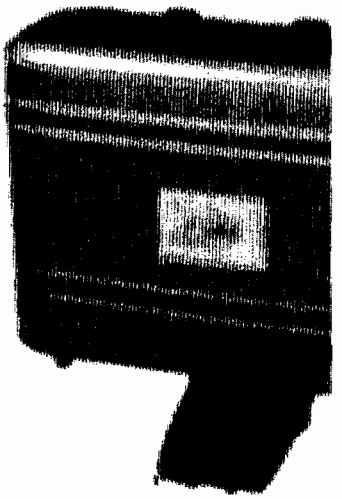

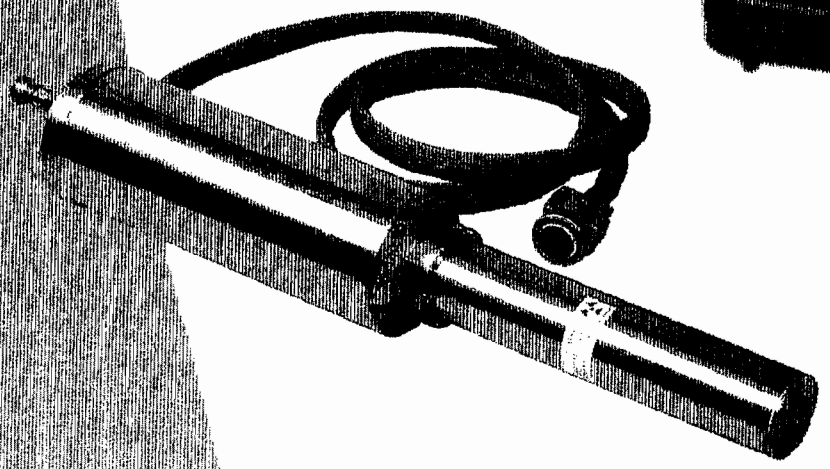

The SODERN neutron generator offers commercial quality unavailable anywhere. Only SODERN builds neutron generator on a production basis. Annual tube production capacity exceeds three hundred.

The GENIE 16 C is a neutron generator that has been specially designed for in-situ analysis.

This neutron generator draws on Sodern's extensive experience in manufacturing reliable sealed neutron tubes for industrial applications.

Its high energy, neutron-pulsed emission makes the GENIE 16 C suitable for a wide range of uses:

- Explosive material detection
- Chemical weapon identification
- Land mine inspection
- Narcotics detection
- Nuclear material detection

The GENIE 16 C offers a variety of advantages for several industrial fields:

- Advanced design :
Compact and portable for easy integration into industrial systems and applications, about 15kg, no VHV cable.

-Unsurpassed tube life:
4000 working hours insuring low cost operation.

- Easy to use:
Digitised control electronic and user-friendly software.

-Safety:
No radiation in the off position, safety loops.

All components, assemblies and systems are designed, built or integrated in-house and are subject to the world's highest standards of testing and quality insurance.

EADS SODERN

Technical specifications

The GENIE16 C features the Soditron or Sodilog sealed tube,which is well known for its extended lifetime (up to 4000 working hours) at 10^8 neutrons/s. Such tubes have been used for a number of years in the oil logging industry and more recently in the Continuous Neutron Analyser which is the first industrial on-line analyser to use a neutron sealed tube as neutron source.

The GENIE16 C Neutron Emitting Module is a stainless steel probe filled with insulating SF6 gas.

Neutron output

- *Neutron Energy: 14 MeV (2.5 MeV for D-D)*
- *Neutron yield: up to 2.10^8 n/s (2.10^6 n/s for D-D)*
- *Typical tube lifetime: 4000 working hours (for 1.10^8 n/s)*

Pulsing parameters

- *Continuous, pulsed and burst mode- Adjustable by operator*
- *Pulse rate: 10Hz to 20kHz*
- *Duty factor: 5% to 100%*
- *Rise and fall time <1.5 μs*

Electrical

- *Accelerator Voltage: Up to 110kV*
- *Maximum Beam current: 60μA*
- *DC power 9/18 VDC, 100Watts,*
- *AC power, optional: 230V-50Hz or 110V-60Hz*
- *2 synchronisation output (TTL) are provided.*

Mechanical

- *Neutron Emitting module: 8kg*
- *Control case: 492mm * 412mm * 240mm - 7Kg*

Remote control

The GENIE16 C is supplied with SODERN control software, and an Active X driver allowing users to control GENIE16 C from their own control software. The computer communicates with the control case using either an RS232 or an RS485 interface.

Options

- *Battery power option*
- *Palm control software*
- *Remote service by modem & technical assistance contract*

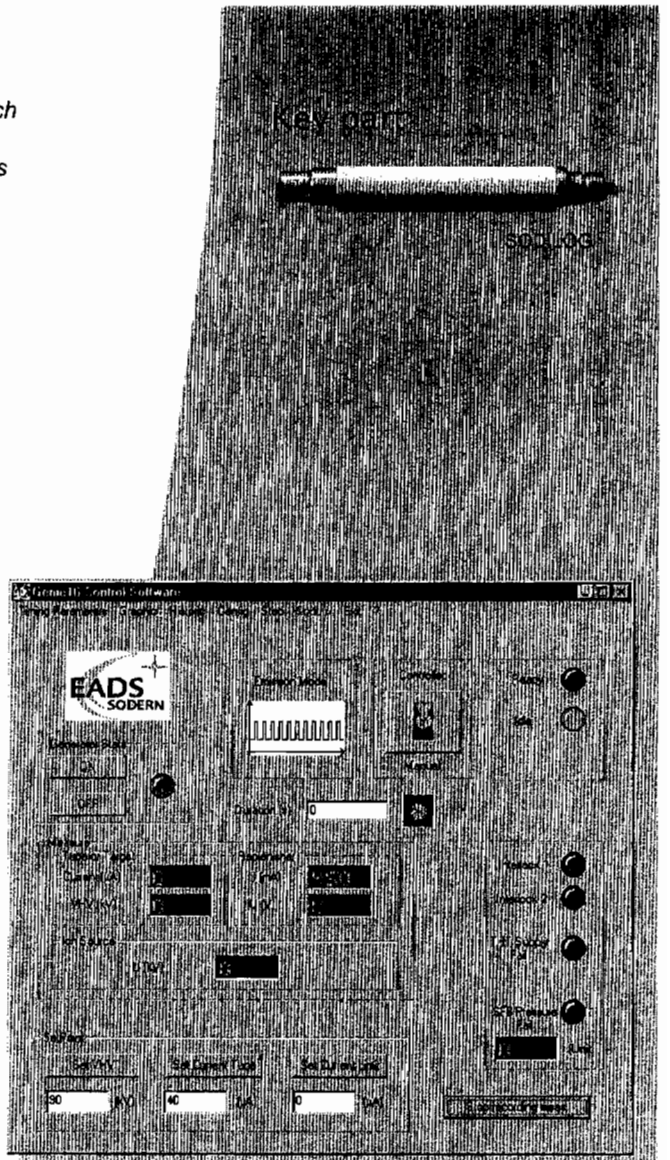

User-friendly operator interface

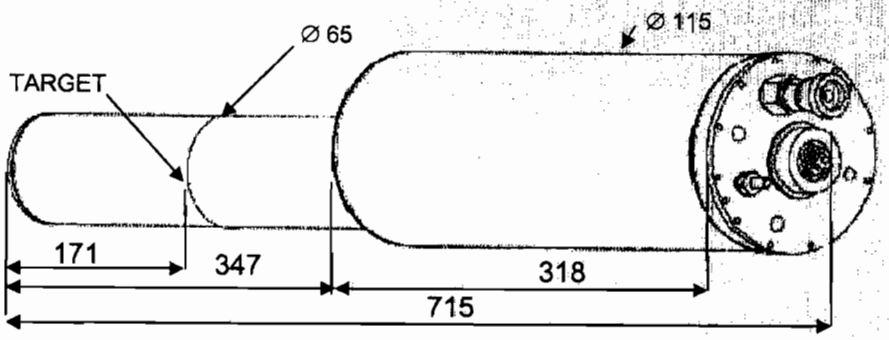

EADS SODERN - 20 Avenue Descartes
94451 Limeil Brévannes - France
Tel : +33 1 45 95 70 11 - Fax : +33 1 45 95 70 70
http://www.sodern.fr Email: neutronics@sodern.fr

US Office - 10455 Pacific Center Court
San Diego CA 92121-4339 - United States
Tel : +1 (858) 457 2000 - Fax : +1 (858) 457 2002
Email: rkahn@sodernusa.com

Quotation From ORNL for Tc-99 Source

****
****

Celestino,

Please see the revised quote for 10 grams. Once I receive the completed and signed order with your license, I can nail down the schedule. We should be able to squeeze it in.

Thanks,

Mitch Ferren
Isotope Business Office
Phone: 865-574-6602

Q2010-0883-1

Material / Isotope

Material: Tc-99 as solid ammonium pertechnetate
Units: gm of Tc-99
Unit Price: $98.67
Quantity: 10.000
Item Total: $986.70

Handling / Technical Service Charges

Technical Service , Byproduct Materials
Item Total: $6,870.00

Radioisotope Packing
Item Total: $1,425.00

GRAND TOTAL: $9,281.70

Payment Plan:
Terms to be Arranged

Shipment:
FCA Oak Ridge, Tennessee, USA

Shipping Charges - Collect
Foreign shipments are subject to export review and an "end-use" statement is required for the approval process.

Order Form Required:
CA 1090.COM Rev 3

Delivery:
8 to 10 weeks from receipt of the USDOE order form.

Available Inventory Subject to Prior Sale.

For stable isotope orders totaling less than or equal to $2,000.00; add a $225.00 packing fee.

Quotations are valid for (30) calendar days from the date of this letter.

Prices are based on milligrams of element for stable isotopes.

REGISTRY OF RADIOACTIVE SEALED SOURCES AND DEVICES
SAFETY EVALUATION OF DEVICE
(AMENDED IN ITS ENTIRETY)

NO.: **CO-1230-D-101-S** **DATE: August 6, 2007** **PAGE 1 OF 15**

DEVICE TYPE: Neutron Generator and Neutron Generator Tubes

MODEL: NEM 16 Series Models: NEM 16 C, NEM 16 D, NEM 16 G, **NEM 16 G LL,** Soditron Tube, Sodilog Tube, **Sodilog LL Tube**

DISTRIBUTOR:

Hazen Research, Inc.
4601 Indiana Street
Golden, CO 80403

MANUFACTURER:

SODERN
20 avenue Descartes
94451 Limeil-Brevannes Cedex
France

SEALED SOURCE MODEL DESIGNATION: N/A

ISOTOPE:

Hydrogen –3
(^{3}H, tritium)

MAXIMUM ACTIVITY:

122 GBq (3.3 Curies)

LEAK TEST FREQUENCY: Not Required

PRINCIPAL USE: (T) Analytical applications such as: neutron activation analysis, neutron radiography, explosives detection, security screening and research.

CUSTOM SOURCE: ___ YES _X_ NO

CUSTOM USER: ___ YES _X_ NO

REGISTRY OF RADIOACTIVE SEALED SOURCES AND DEVICES
SAFETY EVALUATION OF DEVICE
(AMENDED IN ITS ENTIRETY)

DEVICE TYPE: Neutron Generator and Neutron Generator Tubes

DESCRIPTION:

Each NEM **(Neutron Emitting Module)** 16 series unit consist of a pressurized stainless steel housing containing electrical circuits, a heat sink, and a ceramic neutron generator tube containing tritium hydride. An electrical cable connects the NEM 16 unit to the controlling electronics to allow the unit to be operated remotely. When energized, the NEM 16 produces 14 MeV neutrons up to 2 X 10^8 n/s (transients up to 4 x 10^8 n/s are possible). The unit can be operated in the continuous or pulsed modes. The device is supplied with either a Soditron, Sodilog, or **Sodilog LL** ceramic neutron generating tube containing tritium in the form of a solid tritium hydride. The tubes are sealed to prevent leakage. The NEM 16 is sold as a unit, and is intended to be serviced only by personnel certified to do so by the manufacturer. The Sodilog and Soditron neutron generating tubes are registered only as part of the **NEM** unit.

Model NEM 16C:
The NEM 16C is a cylindrical shaped device with a stainless steel housing. The device is approximately 26 inches (665 mm) long, and weighs approximately 16.5 lbs (7.5 kg). Wall thickness for the stainless steel housing is 0.08 inches (2 mm). Housing **seams** are welded closed, with the exception a metal access plate bolted to the end of the cylinder for assembly/servicing. The unit is sealed and pressurized to approximately 75 psi with sulfur hexafluoride (SF_6) to provide electrical insulation. The unit contains a very high voltage (VHV) power supply, a current limitation resistor, a heat sink, and either a Soditron or Sodilog sealed neutron generating tube.

Model NEM 16D:
The NEM 16D consists of a stainless steel tube 4.25 inches (108 mm) in diameter and 27 inches (715 mm) long. It weighs approximately 18.7 lbs (8.5 kg). Wall thickness for the stainless steel housing is 0.08 inches (2 mm). The unit is sealed and pressurized to approximately 75 psi with sulfur hexafluoride (SF_6) to provide electrical insulation. It contains a VHV power supply, a current limitation resistor, a heat sink, and a sealed neutron generating tube. It can be ordered with either the Sodilog or Soditron neutron generating tube.

Model NEM 16G:
The NEM 16G is a cylindrical shaped device with a stainless steel housing. The device is approximately 29 inches (739 mm) long, and weighs approximately 15.5 lbs (7 kg). Wall thickness for the stainless steel housing is 0.08 inches (2 mm). Housing **seams** are welded closed, with the exception a metal access plate bolted to the end of the cylinder for assembly/servicing. The unit is sealed and pressurized to approximately 75 psi with sulfur hexafluoride (SF_6) to provide electrical insulation. The unit contains a current limitation resistor, a heat sink, and either a Soditron or Sodilog sealed neutron generating tube.

REGISTRY OF RADIOACTIVE SEALED SOURCES AND DEVICES
SAFETY EVALUATION OF DEVICE
(AMENDED IN ITS ENTIRETY)

DEVICE TYPE: Neutron Generator and Neutron Generator Tubes

Model NEM 16G LL:
The NEM 16G LL is a cylindrical shaped device with a stainless steel housing and is of a similar design as the 16G. The "LL" designation indicates that is is a "long life" model and uses only the Sodilog LL Neutron Generating Tube. The main body of the device is approximately 27.5 inches (698 mm) long, 4.1 inches (104 mm) diameter and weighs approximately 21 lbs (9.6 kg). Wall thickness for the stainless steel housing is 0.08 inches (2 mm). Housing seams are welded closed, with the exception a metal access plate bolted to the end of the cylinder for assembly/servicing. The unit is sealed and pressurized to approximately 75 psi with sulfur hexafluoride (SF_6) to provide electrical insulation. The unit contains a current limitation resistor, a heat sink, and a Sodilog LL sealed neutron generating tube.

Sodilog Neutron Generating Tube:
The Sodilog tube is a vacuum-sealed metal and ceramic component **of the NEM series units** that is approximately 6.5 inches long and 1 inch in diameter. It weighs approximately 250g. It includes an ion source, a VHV accelerator space, a target, and a gas reservoir. The target and the reservoir are impregnated with a mixture of 50% deuterium and 50% tritium (3.3 Ci). When the tube is in operation, the penning type ion source is supplied at approximately 2 kV. The target is polarized at a VHV on the order of 70 to 110 kV, depending on the emission required. The target consists of a film of mixed deuterium+tritium hydride. The target emits 14 MeV neutrons up to 2×10^8 n/s (transients up to 4×10^8 n/s) when struck with the accelerated deuterium and tritium ions. Tube lifetime is reported to be between 8,000 and 10,000 working hours.

Sodilog LL Neutron Generating Tube:
The Sodilog LL (long life) tube is a vacuum-sealed metal and ceramic component of the NEM 16 LL device and is distributed <u>only</u> as a component of the NEM 16 LL device. It is similar to the "standard" (non LL) Sodilog tube in design and construction materials, but has different dimensions. The main difference between the Sodilog and Sodilog LL is the detailed arrangement of the insulating material which have improved tube life. It is approximately 7.95 inches long and 2.9 inches in diameter, and weighs approximately 1.3 kg (2.86 lbs). It includes an ion source, a VHV accelerator space, a target, and a gas reservoir. The target and the reservoir are impregnated with a mixture of 50% deuterium and 50% tritium (3.3 Ci). When the tube is in operation, the penning type ion source is supplied at approximately 2 kV. The target is polarized at a VHV on the order of 70 to 110 kV, depending on the emission required. The target consists of a film of mixed deuterium+tritium hydride. The target emits 14 MeV neutrons up to 2×10^8 n/s (transients up to 4×10^8 n/s) when struck with the accelerated deuterium and tritium ions. Tube lifetime is reported to be between 8,000 and 15,000 working hours.

REGISTRY OF RADIOACTIVE SEALED SOURCES AND DEVICES
SAFETY EVALUATION OF DEVICE
(AMENDED IN ITS ENTIRETY)

DEVICE TYPE: Neutron Generator and Neutron Generator Tubes

Soditron Neutron Generating Tube:
The Soditron tube is a vacuum-sealed metal and ceramic component **of the NEM series units** that is approximately 6.1 inches in length and 1 inch in diameter. It weighs approximately 200g. Operation and construction are similar to the Sodilog tube. The tube contains 3.3 Ci of tritium and produces 14 MeV neutrons up to 2 x 10^8 n/s (transients up to 4 x 10^8 n/s). Tube lifetime is reported to be between 8,000 and 10,000 working hours.

LABELING:

Each NEM 16 is labeled with a metal tag etched with the words "Caution--Radioactive Material." The tag is attached to the device with a metal wire. In addition, three plastic labels are attached to the device with glue. They list the model number, serial number, distributor's name and address, isotope, activity, and the radiation trefoil.

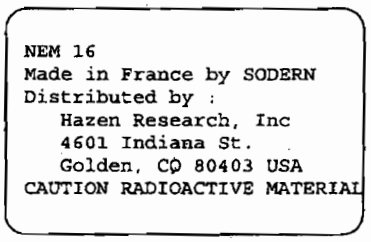

Metal Tag

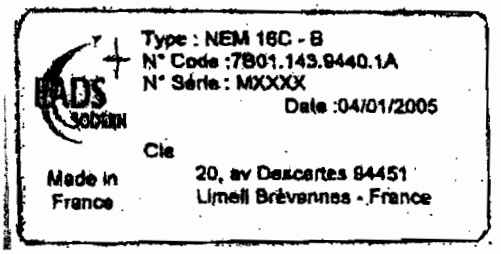

Label – Model & Serial Number

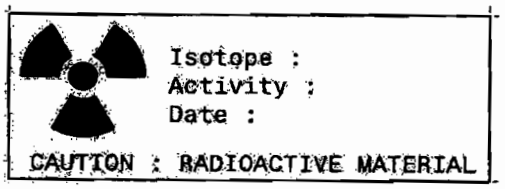

Label - Activity

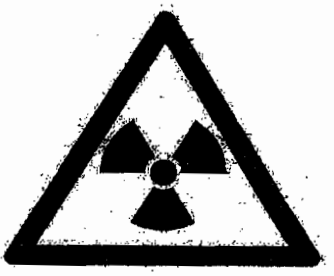

Label – Radiation Symbol

DIAGRAMS: See Attachments

CONDITIONS OF NORMAL USE:

The device is designed and manufactured as a source of neutrons for a variety of analytical applications. Among the potential uses are neutron activation analysis, neutron radiography, explosives detection, security screening, process analysis instrumentation, quality control testing and research. The device is expected to be subjected to environments typically found in areas occupied by humans. The operating temperature range for the device is reported to be 14^0F to 122^0F (-10^0 to 50^0C).

REGISTRY OF RADIOACTIVE SEALED SOURCES AND DEVICES
SAFETY EVALUATION OF DEVICE
(AMENDED IN ITS ENTIRETY)

DEVICE TYPE: Neutron Generator and Neutron Generator Tubes

PROTOTYPE TESTING:

The device has a history of use in Europe and other parts of the world. Prior to approval, the licensing authority should evaluate the use conditions to determine that these devices will withstand the conditions of use.

EXTERNAL RADIATION LEVELS:

When in operation, the NEM 16 produces high levels of neutron radiation. It must only be used in applications that provide proper shielding, procedures and training to ensure radiological safety of personnel. The design of the shielding must take into account the maximum transient neutron flux value of 4×10^8 n/s. The device also produces x-rays when in operation, but the exposure rate is reported to be negligible when compared to that of the neutron radiation. Beta radiation from the tritium, which is sealed within the Soditron/Sodilog tubes, produces no measurable radiation fields outside the device. In the event of severe damage to the device, where Soditron/Sodilog tube breakage is suspected, only a small amount of tritium gas will be released. Avoid heating the pieces to minimize the amount of tritium gas released. Parts within the NEM 16 device should be considered contaminated with tritium.

The manufacturer reported the following neutron exposure rates for the NEM 16:

Operating at the maximum 4×10^8 n/s:	Operating at the nominal 2×10^8 n/s:
453 Rem/hr (4530 mSv/hr) on contact	230 Rem/hr (2300 mSv/hr) on contact
90 Rem/hr (900 mSv/hr) at 5 cm	45 Rem/hr (450 mSv/hr) at 5 cm
6.3 Rem/hr (63 mSv/hr) at 30 cm	3.2 Rem/hr (32 mSv/hr) at 30 cm
670 millirem/hr (6.7 mSv/hr) at 100 cm	340 millirem/hr (3.4 mSv/hr) at 100 cm
79 millirem/hr (0.79 mSv/hr) at 300 cm	39 millirem/hr (0.39 mSv/hr) at 300 cm

NOTE: Following operation, neutron activation of tube components, the stainless steel housing, and objects near the device will produce external gamma radiation. Appropriate monitoring and safety precautions must be employed to ensure the safety of personnel.

The table below shows the gamma equivalent dose rates measured at the surface of a NEM 16 after 70 hours of continuous operation at a nominal neutron emission rate of 3×10^7 n/s. The maximum dose rates are measured in the upper part of the NEM at the closest position to the neutron tube target.

Cooling period in h	0.15	2	18	26	50	73	97	162
Dose rate in µSv/h	62	30	13	10	4	2	1	0.6

REGISTRY OF RADIOACTIVE SEALED SOURCES AND DEVICES
SAFETY EVALUATION OF DEVICE
(AMENDED IN ITS ENTIRETY)

DEVICE TYPE: Neutron Generator and Neutron Generator Tubes

As an example, the diagram below illustrates the gamma equivalent dose rates in a NEM 16G activation following a 10-minute neutron emission, at a flux of approximately 8×10^7 n/s. The measurements are taken at the surface and are expressed in µSv/h.

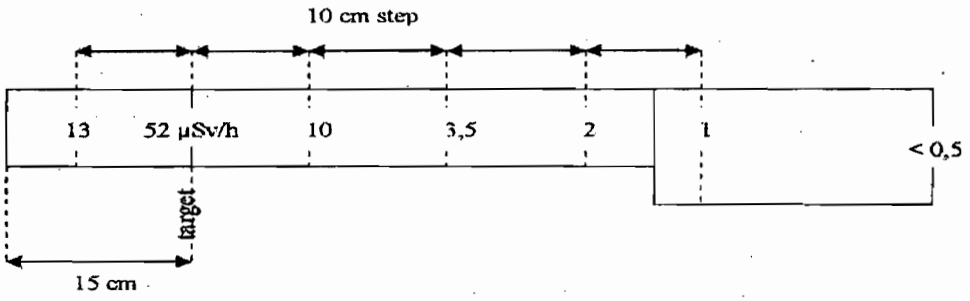

Therefore, it is recommended that the NEM be handled at the section with the largest diameter and where the dose rate is the lowest.

These experimental results can be used to calculate the estimated dose rates (as close to the tube target as possible) for different operating modes:

The following table shows estimated dose rate after the NEM 16 is turned off following continuous operation at a neutron flux of 2×10^8 n/s:

emission period in hours	Dose rate in µSv/h (as close to the tube target as possible)			
	On contact	At 20 cm	At 50 cm	At 1 m
0,1	89	14	2	1
0,25	169	27	4	1
0,50	232	37	6	1
1	268	43	7	2
4	317	51	8	2
8	357	57	9	2
16	408	65	10	3
24	440	70	11	3
100	518	83	13	3
1000	556	89	14	4

QUALITY ASSURANCE AND CONTROL:

The manufacturer has an ISO 9001 certification. Each device supplied to Hazen Research, the US distributor, will be inspected and tested by Hazen in accordance with a written quality assurance and control program that has been deemed acceptable for licensing purposes. Hazen Research will maintain all procedures and records as part of the conditions of their radioactive materials license.

REGISTRY OF RADIOACTIVE SEALED SOURCES AND DEVICES
SAFETY EVALUATION OF DEVICE
(AMENDED IN ITS ENTIRETY)

DEVICE TYPE: Neutron Generator and Neutron Generator Tubes

LIMITATIONS AND OTHER CONSIDERATIONS OF USE:

The NEM devices shall be distributed to persons specifically licensed by the U.S. Nuclear Regulatory Commission or an Agreement State. Each applicant must be considered on an individual basis, with particular attention given to the following:

- **This evaluation does not authorize or evaluate distribution of the Sodilog, Sodilog LL, or Soditron neutron generating tubes other than as a component of the NEM 16 devices and for the purposes specified in this evaluation.**
- **This evaluation does not authorize or evaluate distribution of any devices mentioned herein for down-hole use in well logging or similar applications.**
- Training for authorized users.
- Adequate shielding or administrative controls.
- Handling, posting and interlock or control procedures adequate for the use of this equipment generating 14 MeV neutrons and producing radiation levels to 453 Rem per hour.
- Emergency procedures.
- Fire protection considerations, since this device cannot be expected to withstand either a major fire or explosion. Curie amounts of tritium could be released.
- The NEM 16 device is not to be opened by the end-user.
- Reviewers for Security Applications should review NCRP Commentary #17, "Pulsed Fast Neutron System Used in Security Surveillance."
- Handling, storage, use, transfer, and disposal: To be determined by the licensing authority.

This registration sheet and the information contained within the references shall not be changed without the written consent of the Colorado Department of Public Health and Environment.

SAFETY ANALYSIS SUMMARY:

Based on our review of the information and test data cited below and the past history of similar designs, we conclude that the model NEM 16 devices are acceptable for licensing purposes.

Furthermore, we conclude that the device would be expected to maintain its containment integrity for normal conditions of use and accidental conditions, which might occur during uses specified in this certificate.

REGISTRY OF RADIOACTIVE SEALED SOURCES AND DEVICES
SAFETY EVALUATION OF DEVICE
(AMENDED IN ITS ENTIRETY)

NO.: CO-1230-D-101-S **DATE: August 6, 2007** **PAGE 8 OF 15**

DEVICE TYPE: Neutron Generator and Neutron Generator Tubes

REFERENCES:

The following supporting documents for the model NEM 16 are hereby incorporated by reference and are made part of this registry document.

Hazen Research Inc.'s application dated October 7, 2004 with enclosures thereto.
Sodern Quality Manual received on November 30, 2004.
Sodern Genie 16 Instruction Manual received on November 30, 2004.
Hazen Research Inc.'s letter dated January 27, 2005 with enclosures thereto.
Hazen Research Inc.'s e-mails with enclosures thereto dated: February 4, 2005, February 11, 2005, February 15, 2005, March 11, 2005, April 19, 2005, April 25, 2005, and May 11, 2005.
Hazen Research Inc.'s correspondence and e-mails with enclosures (pertaining to the addition of the NEM 16G LL device) thereto dated: May 29, 2007, June 27, 2007, July 10, 2007, July 26, 2007, and July 27, 2007.

ISSUING AGENCY: Colorado Department of Public Health and Environment

Date: 8/6/07 Reviewer: [signature]

Date: 6 Aug 07 Concurrence: [signature]

REGISTRY OF RADIOACTIVE SEALED SOURCES AND DEVICES
SAFETY EVALUATION OF DEVICE
(AMENDED IN ITS ENTIRETY)

NO.: CO-1230-D-101-S **DATE: August 6, 2007** **PAGE 9 OF 15**

DEVICE TYPE: Neutron Generator and Neutron Generator Tubes

ATTACHMENT 1

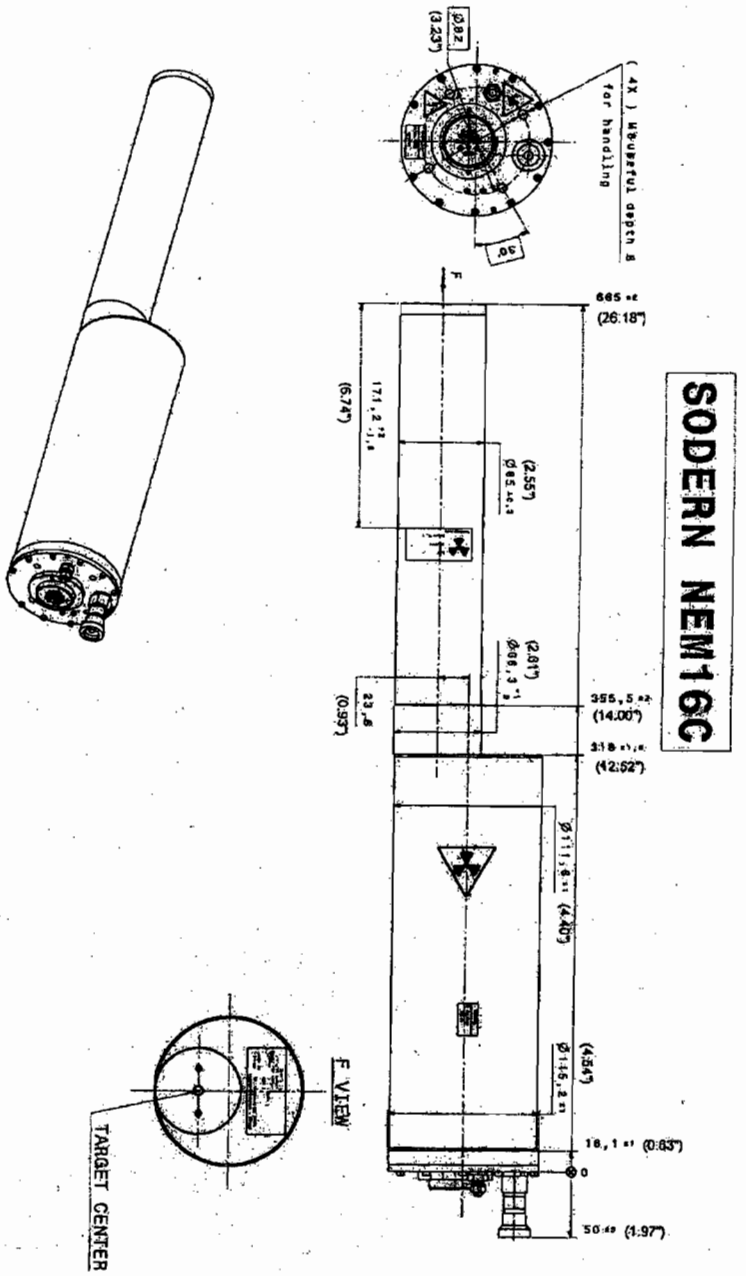

REGISTRY OF RADIOACTIVE SEALED SOURCES AND DEVICES
SAFETY EVALUATION OF DEVICE
(AMENDED IN ITS ENTIRETY)

NO.: **CO-1230-D-101-S** **DATE: August 6, 2007** **PAGE 10 OF 15**

DEVICE TYPE: Neutron Generator and Neutron Generator Tubes

ATTACHMENT 2

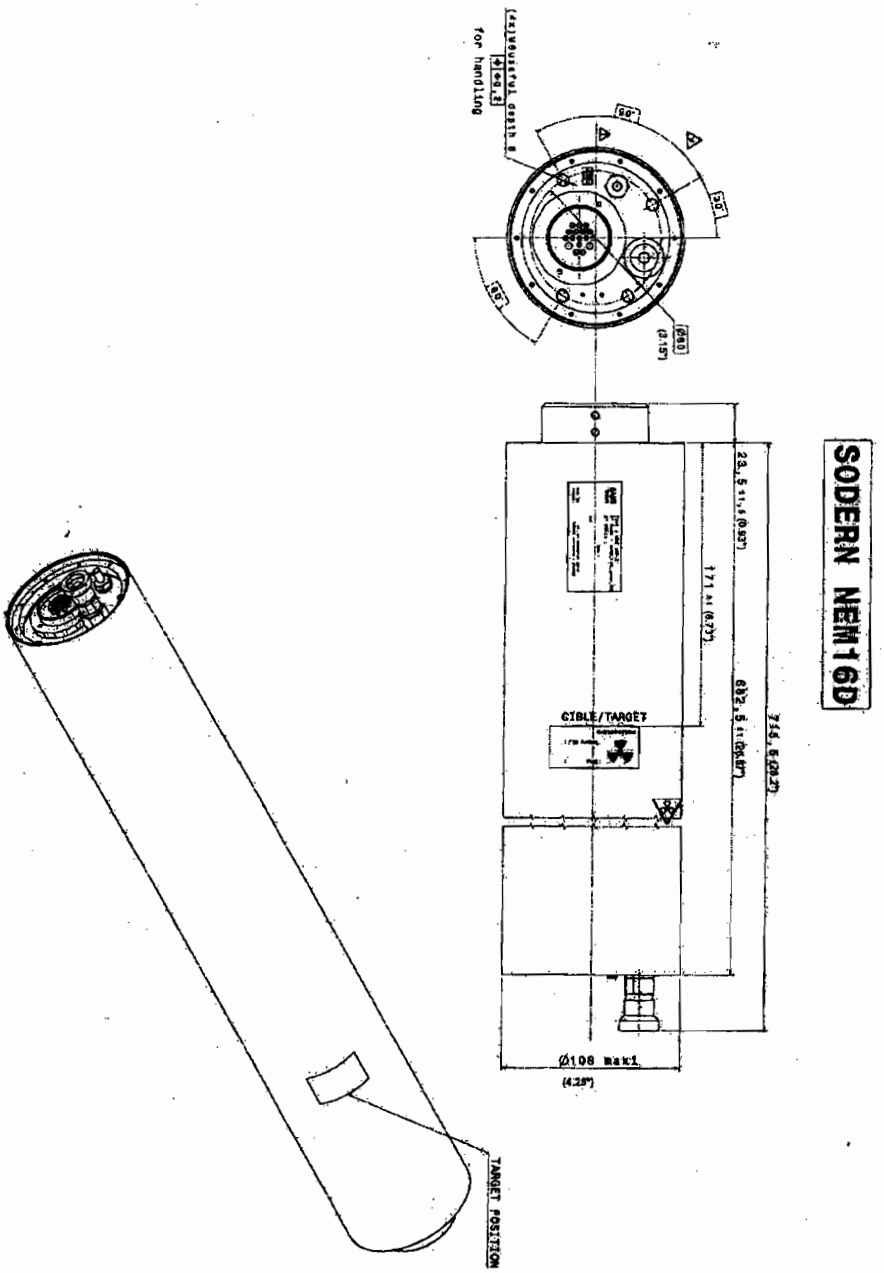

REGISTRY OF RADIOACTIVE SEALED SOURCES AND DEVICES
SAFETY EVALUATION OF DEVICE
(AMENDED IN ITS ENTIRETY)

NO.: **CO-1230-D-101-S** **DATE: August 6, 2007** **PAGE 11 OF 15**

DEVICE TYPE: Neutron Generator and Neutron Generator Tubes

ATTACHMENT 3

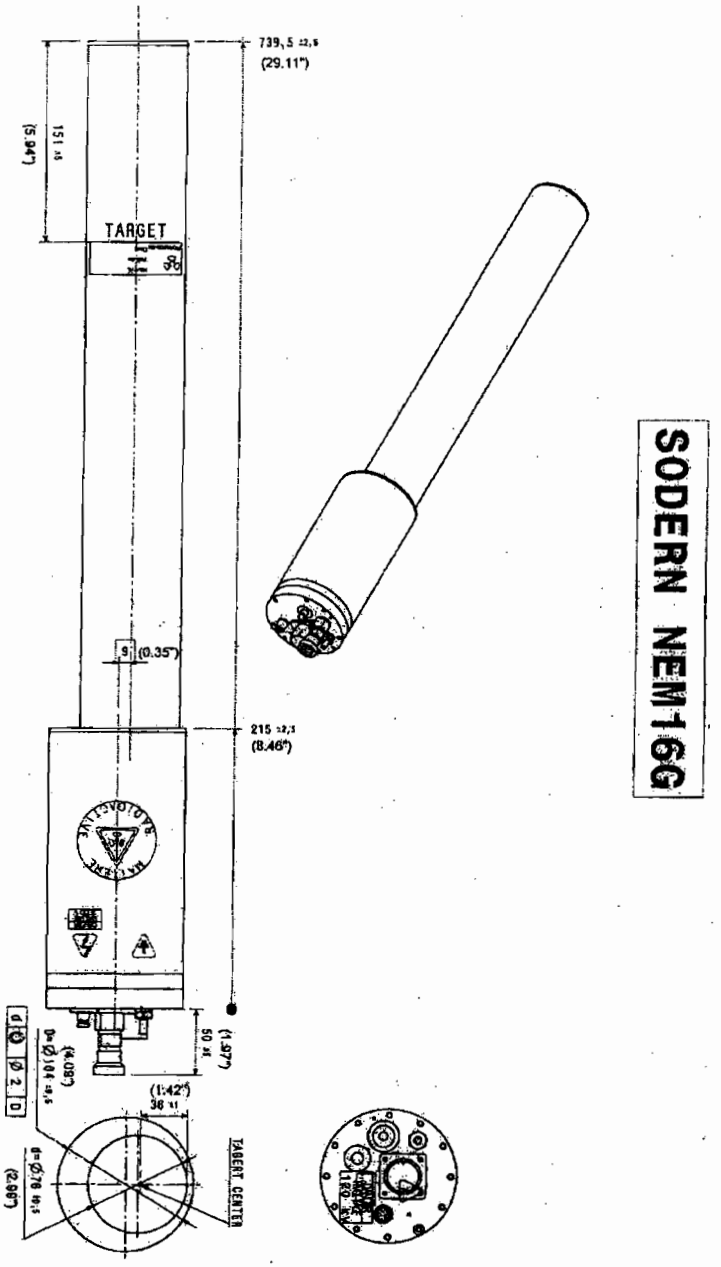

REGISTRY OF RADIOACTIVE SEALED SOURCES AND DEVICES
SAFETY EVALUATION OF DEVICE
(AMENDED IN ITS ENTIRETY)

NO.: CO-1230-D-101-S **DATE:** August 6, 2007 **PAGE 12 OF 15**

DEVICE TYPE: Neutron Generator and Neutron Generator Tubes

ATTACHMENT 4

SODERN NEM 16G LL

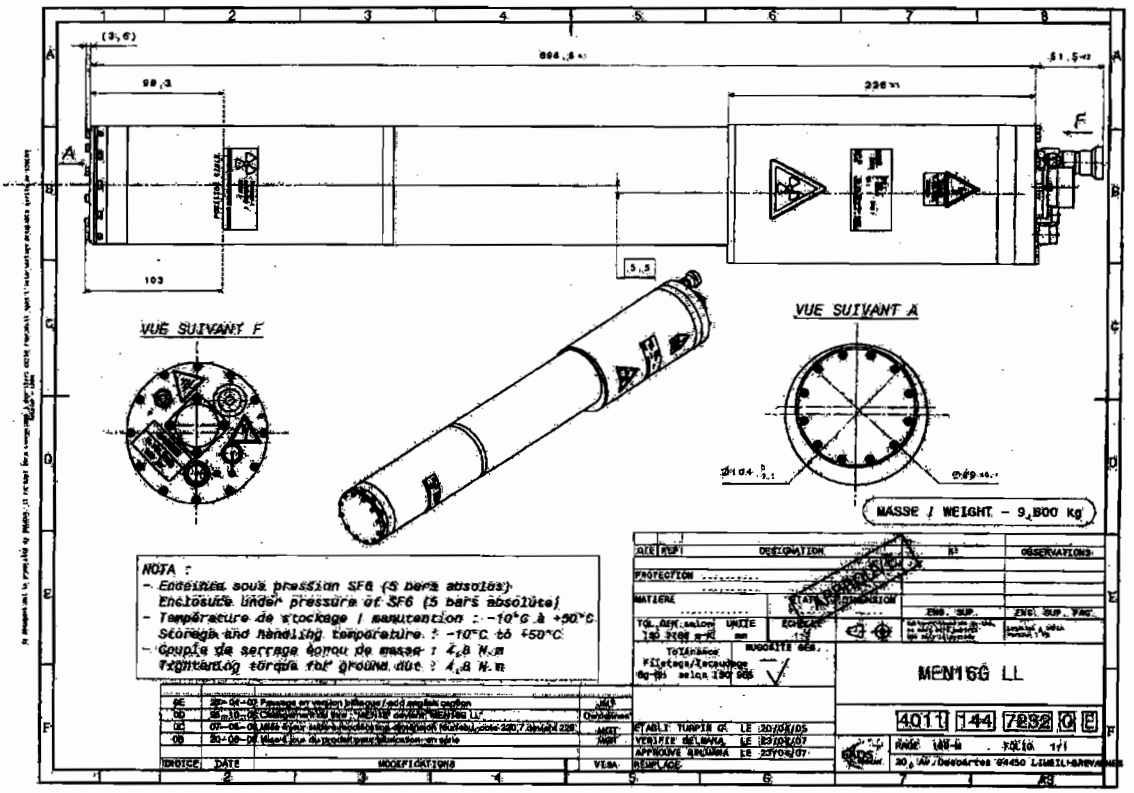

REGISTRY OF RADIOACTIVE SEALED SOURCES AND DEVICES
SAFETY EVALUATION OF DEVICE
(AMENDED IN ITS ENTIRETY)

NO.: CO-1230-D-101-S **DATE: August 6, 2007**

DEVICE TYPE: Neutron Generator and Neutron Generator Tubes

ATTACHMENT 5

SODILOG TUBE

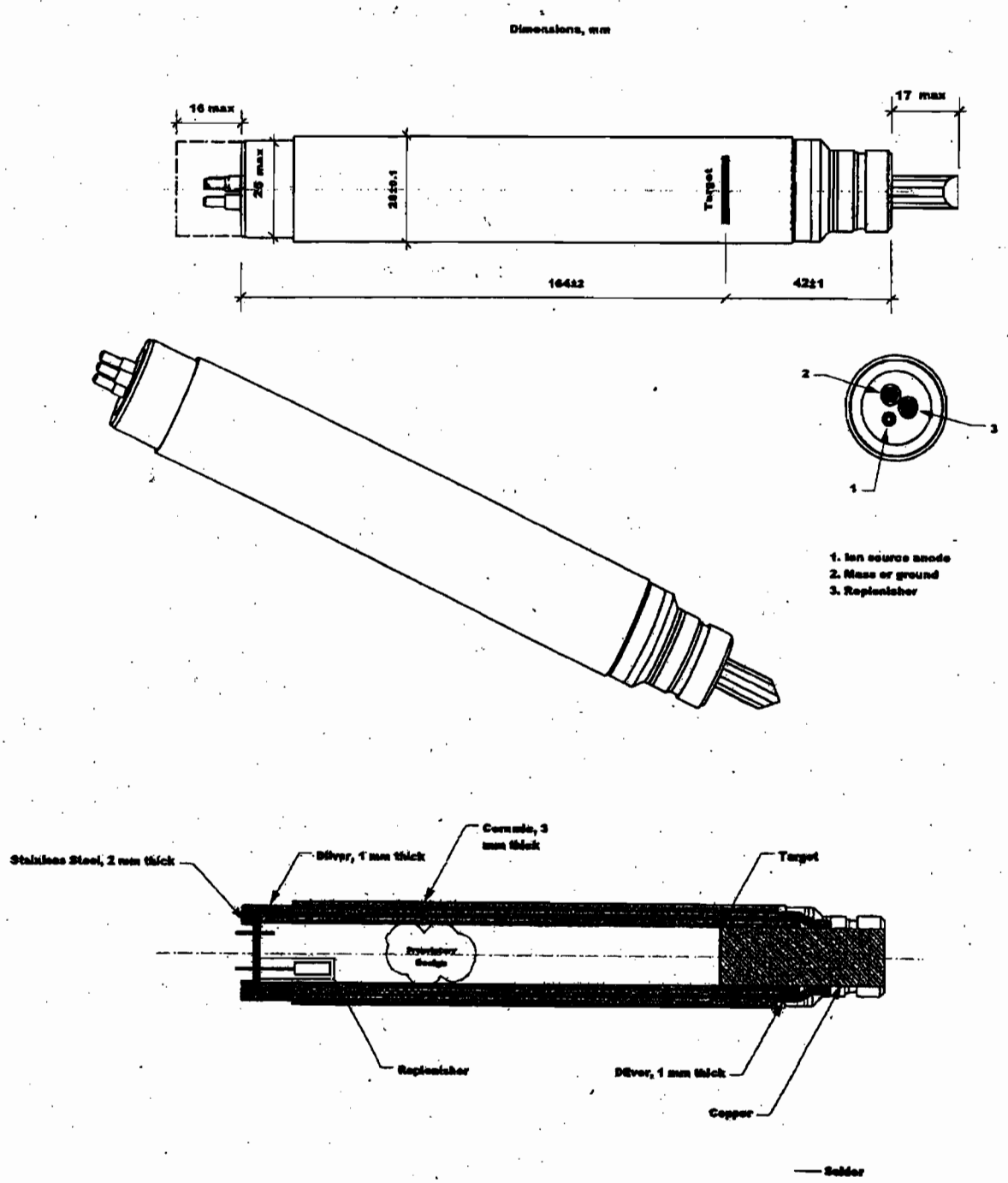

REGISTRY OF RADIOACTIVE SEALED SOURCES AND DEVICES
SAFETY EVALUATION OF DEVICE
(AMENDED IN ITS ENTIRETY)

NO.: CO-1230-D-101-S **DATE:** August 6, 2007

DEVICE TYPE: Neutron Generator and Neutron Generator Tubes

ATTACHMENT 6

SODILOG LL TUBE

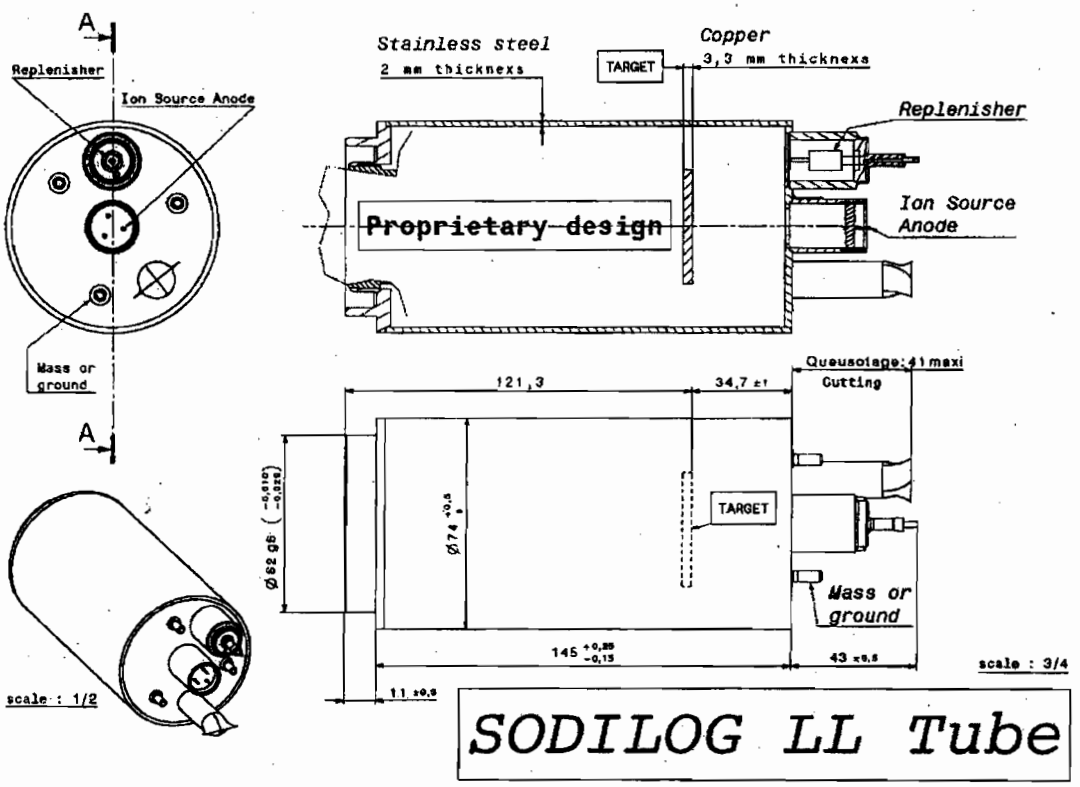

REGISTRY OF RADIOACTIVE SEALED SOURCES AND DEVICES
SAFETY EVALUATION OF DEVICE
(AMENDED IN ITS ENTIRETY)

NO.: CO-1230-D-101-S **DATE:** August 6, 2007

DEVICE TYPE: Neutron Generator and Neutron Generator Tubes

ATTACHMENT 7

SODITRON TUBE

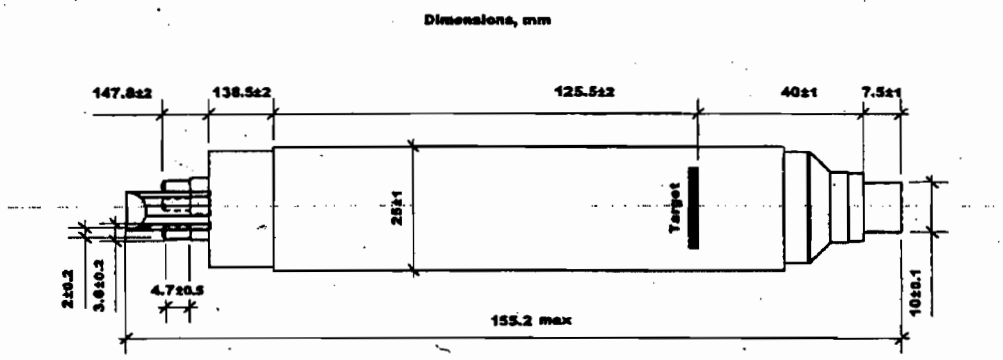

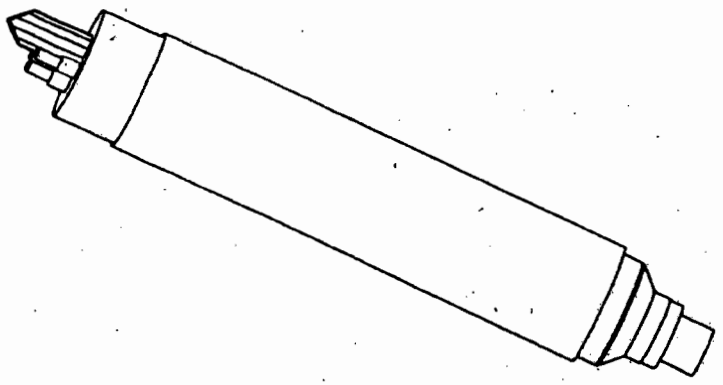

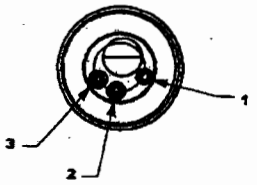

1. Ion source anode
2. Mass or ground
3. Replenisher

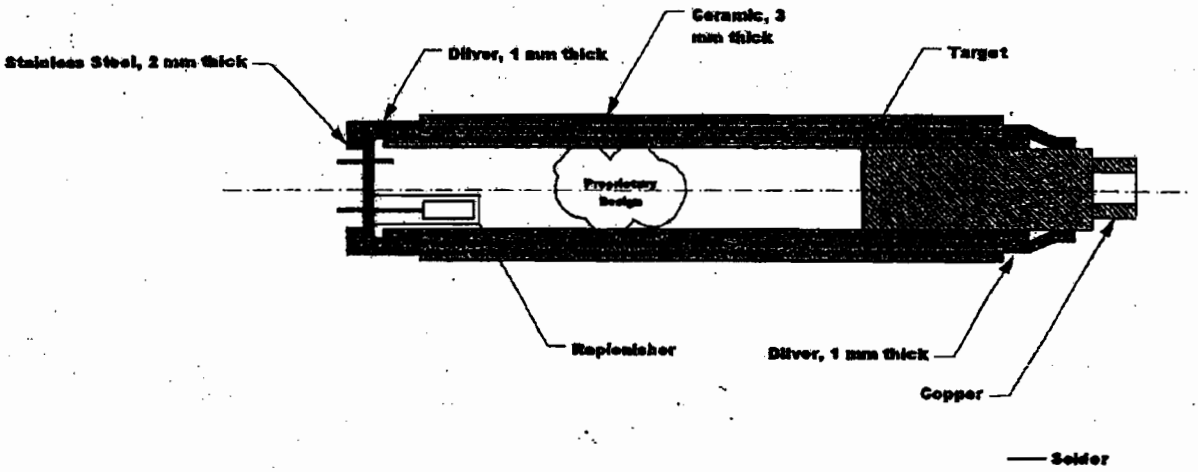

This is to acknowledge the receipt of your letter/application dated 3/3/2011 (FAX RECEIVED 3/15/2011), and to inform you that the initial processing which includes an administrative review has been performed.

NEW LICENSE APPLICATION (03038428)

☑ There were no administrative omissions. Your application was assigned to a technical reviewer. Please note that the technical review may identify additional omissions or require additional information.

☐ Please provide to this office within 30 days of your receipt of this card

_____.

A copy of your action has been forwarded to our License Fee & Accounts Receivable Branch, who will contact you separately if there is a fee issue involved.

Your action has been assigned **Mail Control Number** 574649.
When calling to inquire about this action, please refer to this control number.
You may call us on (610) 337-5398, or 337-5260.

NRC FORM 532 (RI)
(6-96)

Sincerely,
Licensing Assistance Team Leader