Entergy

Entergy Nuclear Operations, Inc.
Pilgrim Nuclear Power Station
600 Rocky Hill Road
Plymouth, MA 02360

Stephen J. Bethay
Director, Nuclear Safety Assurance

March 4, 2011

U.S. Nuclear Regulatory Commission
Attn: Document Control Desk
Washington, D.C. 20555-0001

SUBJECT: Entergy Nuclear Operations, Inc.
Pilgrim Nuclear Power Station
Docket No. 50-293
License No. DPR-35

Pilgrim Relief Request PRR-21, Application of NRC Approved In-Service Inspection of Pilgrim Relief Request PRR-19, (Jet Pump Instrumentation Nozzle Weld RPV-N9A-1 Repair Plan) for Reactor Pressure Vessel N14-1, N14-NV, N15A/B-NV, and N16A/B-NV Nozzle Welds as a Contingency Repair Plan.

REFERENCE:

1. Entergy Letter No. 2.09.032, Pilgrim Relief Request (PRR)-19, Jet Pump Instrumentation Nozzle Weld, RPV-N9A-1 Repair Plan, dated May 1, 2009.

2. NRC Approval Letter, Relief Request (PRR-19), Install a Weld Overlay on Jet Pump Instrumentation Nozzle Weld RPV-N9-1-Pilgrim Nuclear Power Station (TAC No. ME1151), dated September 11, 2009.

LETTER NUMBER: 2.11.015

Dear Sir or Madam:

Pursuant to 10 CFR 50.55a(a)(3)(i), Entergy requests NRC approval to use the previously approved alternative repair plan discussed in References 1 and 2, as a Contingency Repair Plan, to repair Reactor Pressure Vessel RPV-N14-NV, RPV-N15A/B-NV, and RPV-N16A/B-NV partial penetration nozzle welds and Standby Liquid Control (SLC) safe end to nozzle weld RPV-N14-1, if flaw indications are detected during Refueling Outage (RFO)-18 in-service inspection of these welds.

Pilgrim is in the fourth In-Service Inspection (ISI) Interval that began on July 1, 2005, and the code of record for the current fourth ISI interval is the 1998 Edition with 2000 Addenda of ASME Code Section XI. NRC previously approved the repair plan by Reference 2 that was implemented for RPV Jet Pump Instrumentation Nozzle, RPV-N9A-1. The same repair plan is applicable for the welds included in Attachment 1.

During RFO-18, scheduled to commence in mid-April, 2011, Entergy is planning to inspect the subject nozzle welds and SLC safe end to nozzle weld RPV-N14-1 as part of the in-service examination program. These welds are part of the reactor pressure boundary and fall within the scope of ASME Code Section XI requirements for repair if flaws should be discovered during the inspection. Prior inspections identified no flaws. The type of inspection and prior inspection results are described in Attachment 1.

A047
NRR

Attachments 2 and 3 are provided to support NRC review and approval of the Entergy request.

During RFO-17, NRC approved an alternative repair plan for a 4 inch RPV Jet Pump Instrumentation Nozzle Weld, RPV-N9A-1 by Reference 2. The alternative repair plan consists of a weld overlay using the ASME Code Cases N-638-1, "Similar and Dissimilar Metal Welding Using Ambient Temperature Machine GTAW Temper Bead Technique, Section XI, Division 1," and N-504-3, Alternative Rules for Repair of Class 1, 2, and Austenitic Stainless Steel Piping, Section XI, Division 1", as described in Reference 1.

Partial penetration nozzle welds RPV-N14-NV, RPV-N15A/B-NV, and RPV-N16A/B-NV and SLC nozzle to safe end weld RPV-N14-1 are nominally 2 inch in size. The repair of these welds, if indications are identified during examination, would fall within the scope and requirements of the alternative repair plan approved by the NRC for RPV-N9A-1 weld, using the ASME Code Cases N-638-1 and N-504-3.

NRC Regulatory Guide 1.147, Revision 16, "Inservice Inspection Code Case Acceptability, ASME Section XI, Division I" includes in Table 2, the later version of ASME Code Cases, N-504-4 and N-638-4, as "Conditionally Acceptable Section XI Code Cases".

Entergy has evaluated the differences between N-504-3 and N-504-4, and N-638-1 and N-638-4, and has determined that Entergy can continue to comply with the NRC approved alternative repair plan described in Reference 2, based on the discussion included in Regulatory Guide 1.147, Revision 16, 3rd paragraph on page 3, which states the following:

> *"If a Code Case is implemented by a licensee and a later version of the Code Case is incorporated by reference into 10 CFR 50.55a and listed in Table 1 and 2 during the licensee's present 120-month ISI program interval, that licensee may use either the later version or the previous version. An exception to this provision would be the inclusion of a limitation or condition on the use of the Code Case that is necessary, for example, to enhance safety. Licensees who choose to continue use of the Code Case during the subsequent 120-month ISI program interval will be required to implement the latest version incorporated by reference into 10 CFR 50.55a and listed in Tables 1 and 2."*

Implementation of the NRC previously approved alternative repair plan provides an acceptable level of quality and safety.

Pursuant to 10 CFR 50.55a(a)(3)(i), Entergy requests NRC approval to include Reactor Pressure Vessel RPV-N14-NV, RPV-N15A/B-NV, and RPV-N16A/B-NV partial penetration nozzle welds and SLC safe end to nozzle weld RPV-N14-1 in the Contingency Repair Plan for the reminder of fourth ISI interval.

There are no commitments contained in this letter.

If you have any questions or require additional information, please contact Mr. Joseph Lynch, Licensing Manager, at (508) 830-8403.

Sincerely,

Stephen J. Bethay

Attachment 1: Reactor Pressure Vessel Instrumentation Nozzle Weld Overlay Candidates
Attachment 2: Reference 1 (28 pages)
Attachment 3: Reference 2 (14 pages)

cc: Next page

With Attachments

Regional Administrator, Region 1
U.S. Nuclear Regulatory Commission
475 Allendale Road
King of Prussia, PA 19406

Senior Resident Inspector
Pilgrim Nuclear Power Station

Mr. Richard Guzman, Project Manager
Plant Licensing Branch I-1
Office of Nuclear Reactor Regulation
U.S. Nuclear Regulatory Commission
One White Flint North, O-8C2
11555 Rockville Pike
Rockville, MD 20852

ATTACHMENT 1

TO ENTERGY LETTER NO 2.11.015

REACTOR PRESSSURE VESSEL INSTRUMENTATION NOZZLE WELD OVERLAY CANDIDATES

RPV INSTRUMENTATION NOZZLE WELDS

Weld No.	Description	Drawing	Inspection History
RPV-N14-1	Standby Liquid Control safe end-to-nozzle weld	ISI-I-11-1	UT examination is planned per BWRVIP-27A in RFO 18 (then once every 10 years). Previous to RFO18 the following examinations were conducted: A PT examination was conducted every 2 outages per BWRVIP-27A until UT is done. EVT-2 was conducted every outage until UT is done. (EVT-2 was completed RFO 15, 16, and 17). PT was completed RFO 11, 15, and 17.
RPV-N14-NV	Standby Liquid Control partial penetration nozzle weld	ISI-I-11-1	EVT-2 completed in RFO 15, 16, and 17
RPV-N15A-NV	RPV Water Level Instrumentation partial penetration nozzle weld	ISI-I-54-1	EVT-2 completed in RFO 15, 16, and 17
RPV-N15B-NV	RPV Water Level Instrumentation partial penetration nozzle weld	ISI-I-54-1	EVT-2 completed in RFO 15, 16, and 17
RPV-N16A-NV	RPV Water Level Instrumentation partial penetration nozzle weld	ISI-I-54-1	EVT-2 completed in RFO 15, 16, and 17
RPV-N16B-NV	RPV Water Level Instrumentation partial penetration nozzle weld	ISI-I-54-1	EVT-2 completed in RFO 15, 16, and 17

Standby Liquid Control nozzle safe end-to-nozzle weld RPV-N14-1 is a 2.5 inch OD butt weld consisting of an Alloy 600 nozzle assembly welded to a 304 stainless steel safe end extension with Inconel 182 filler metal (ref. BWRVIP-27A Figure 2-1). Since this weld is less than 4 inches in diameter, the 1998 edition with 2000 addenda of the ASME Section XI code requires a surface examination every ten years. Pilgrim received approval to implement a Class 1 risk-informed inspection program in 2001 in lieu of ASME Section XI requirements. This weld is not included in the risk-informed program inspection sample but has been examined periodically with surface and visual examination methods and will be examined using ultrasonic methods during RFO18 and every ten years thereafter in accordance with BWRVIP-27A requirements.

The partial penetration nozzle-to-vessel welds (e.g. –NV suffix) welds listed in the table above were previously included in code category B-E which has since been deleted from the 1998 edition of the ASME Section XI code. These nozzle assemblies are welded to the inside surface of the reactor vessel wall with a partial penetration Inconel weld. Enhanced VT-2 leakage examinations (i.e. insulation removed during examination) are performed on these nozzle assemblies during the Class 1 system pressure test at the close of every refuel outage.

ATTACHMENT 2

TO ENTERGY LETTER NO 2.11.015

Entergy Letter No. 2.09.032, Pilgrim Relief Request (PRR)-19, Jet Pump Instrumentation Nozzle Weld, RPV-N9A-1 Repair Plan, dated May 1, 2009 (28 Pages)

Entergy

Entergy Nuclear Operations, Inc.
Pilgrim Station
600 Rocky Hill Road
Plymouth, MA 02360

May 1, 2009

U.S. Nuclear Regulatory Commission
Attn: Document Control Desk
Washington, D.C. 20555-0001

SUBJECT: Entergy Nuclear Operations, Inc.
Pilgrim Nuclear Power Station
Docket No. 50-293
License No. DPR-35

Pilgrim Relief Request (PRR)-19, Jet Pump Instrumentation Nozzle Weld, RPV-N9A-1 Repair Plan

REFERENCES:

1. NRC Letter, Pilgrim Nuclear Power Station - Relief Request No. PRR-15, Rev. 01, Approval to Include Remaining Reactor Pressure Vessel (RPV) Safe-End Welds in Contingency Repair Plan for Full Structural Weld Overlays (TAC No. MD2663), dated April 2, 2007

2. NRC Letter, Pilgrim Nuclear Power Station - Pilgrim Relief Request PRR-39, Alternative Contingency Repair Plan for Reactor Pressure Vessel Nozzle Safe-End and Dissimilar Metal Piping Welds Using ASME Code Cases N-638 and N-504-2, With Exceptions (TAC No. MC2496), dated April 12, 2005

3. NRC Letter, Arkansas Nuclear One, Unit No. 1-Approval of Relief Request ANO1-R&R-011 to Use a Proposed Alternative to the American Society of Mechanical Engineers Boiler and Pressure Vessel Code Requirements for Weld Overlay Repairs (TAC No. MD6958), dated June 18, 2008

4. NRC Letter, James A. FitzPatrick Nuclear Power Plant- Request for Alternative JAF RR-7, Rev. 1 to Install a Weld Overlay on N2C Nozzle to Recirculation Inlet Piping Safe-End Dissimilar Metal Weld (TAC No. MD9780), dated April 1, 2009

LETTER NUMBER: 2.09.032

Dear Sir or Madam,

Pursuant to 10 CFR 50.55a(a)(3)(i), Entergy requests NRC approval of Pilgrim Relief Request (PRR)-19, to perform an alternative repair of Reactor Pressure Vessel Nozzle (RPV) Safe-End Weld RPV-N9A-1 using the provisions of ASME Code Cases N-638-1 and N-504-3. NRC has previously approved similar alternatives for repairs of Safe-End Welds at Pilgrim, ANO-1, and James A. Fitzpatrick (JAF) Nuclear Power Plants (References 1, 2, 3, and 4).

Entergy also requests NRC approval of the alternative to commence the 48-hour hold time at the completion of the third temper bead weld overlay instead of commencing the 48-hour hold-time at the completion of the entire weld. The justification to commence the 48-hour hold time after third temper bead weld overlay is included in PRR-19. NRC has approved this 48-hour hold-time alternative for ANO-1 and JAF plants in Reference 3 and 4. Thus, the proposed alternative repair of RPV-N9A-1 safe-end weld as described in the enclosed PRR-19 falls within the NRC approved precedents (References 1, 2, 3, and 4). The Pilgrim proposed alternative follows the NRC approved precedents and the past weld overlays have maintained the reactor pressure boundaries. Therefore, the Pilgrim proposed alternative provides an acceptable level of quality and safety.

The Pilgrim RPV-N9A-1 weld consists of a RPV safe-end dissimilar metal weld (DMW) and a Jet Pump Instrumentation (JPI) penetration stainless steel pipe weld. The nozzle is 4" inside diameter (ID) and approximately 5" outside diameter (OD). The penetration side weld was repaired in 1984 with a weld overlay to the standards that were in effect at that time because of a detected flaw. The design of that weld overlay partially covered the safe-end to nozzle weld.

In response to Generic Letter (GL) 88-01, "NRC Position on Intergranular Stress Corrosion Cracking (IGSCC) in BWR Austenitic Stainless Steel Piping", this weld was classified as Category "E" under the GL 88-01 criteria "Cracked, reinforced by weld overlay or mitigated by SI." Under GL 88-01, the Category "E" weld is required to be inspected once per 10 years because it was the subject of a repair.

This weld was inspected in 1999 and no flaws were observed at that time. The weld is currently scheduled for RFO-17 examination under ASME Section XI, Appendix VIII, Supplement 11, Performance Demonstration Initiative (PDI) methodology.

During the preparation of the weld for Non-Destructive Examination (NDE) in RFO-17, Entergy observed that the configuration of this weld was not inspectable per the current NDE standards, because of the configuration of the weld overlay and weldments at the safe-end side. Therefore, Entergy has elected to perform a full "structural weld overlay" over the entire weld to meet the current NDE standards. This structural weld overlay would be performed as an alternative to the ASME Section XI weld repair, as described in the attached PRR-19.

Pursuant to 10 CFR 50.55a(a)(3)(i), Entergy requests NRC approval of the proposed alternative by May 12, 2009, to complete the RPV-N9A-1 weld repair within the Refueling Outage 17 schedule.

The commitments made in this submittal are identified in Enclosure 2.

If you have any questions, please call Mr. Joseph Lynch, Pilgrim Licensing Manager at 508-830-8403.

Sincerely,

Joseph K Lynch - for

Stephen J. Bethay
Director, Nuclear Safety Assurance

SJB/wgl

Enclosure: Pilgrim Relief Request (PRR)-19 (20 pages)

cc:

Regional Administrator, Region 1
U.S. Nuclear Regulatory Commission
475 Allendale Road
King of Prussia, PA 19406

Senior Resident Inspector
Pilgrim Nuclear Power Station

Mr. James S. Kim, Project Manager
Plant Licensing Branch I-1
Division of Operator Reactor Licensing
Office of Nuclear Reactor Regulation
U.S. Nuclear Regulatory Commission
One White Flint North 0-8C2
11555 Rockville Pike
Rockville, MD 20852

Attachment to Letter No. 2.09.032

Pilgrim Relief Request (PRR)-19
(20 pages)

Pilgrim Nuclear Power Station
Docket No. 50-293

PILGRIM RELIEF REQUEST (PPR)-19, JET PUMP INSTRUMENTATION NOZZLE WELD, RPV-N9A-1, REPAIR PLAN

Enclosure 1

Relief Request PPR-19	15 Pages
Attachment 1 Jet Pump Instrumentation Nozzle N-9A Details	2 Pages
Attachment 2 Technical Basis for Alternative to ASME Code Case N-638-1, Area Limitation Change to 500 Square Inches	2 Pages

Enclosure 2

List of Regulatory Commitments	1 Page

ENTERGY NUCLEAR OPERATIONS, INC.
Pilgrim Nuclear Power Station

REQUEST FOR RELIEF
PNPS PPR-19

I. ASME CODE COMPONENTS AFFECTED

Components: ISI Weld RPV-N9A-1 Jet Pump Instrumentation Nozzle "N-9A"

Code Class: 1

References:

1. ASME Section XI, 1998 Edition/2000 Addenda except as listed in Reference 2
2. Appendix Q of ASME Section XI, 2004 Edition/2005 Addenda as required by Regulatory Guide 1.147
3. ASME Section III, 1965 Edition/Winter 1966 Addenda
4. ASME/ANSI B31.1, 1989 Edition/No Addenda
5. PNPS-RPT-05-001, *Pilgrim Fourth Ten Year Inspection Interval Inservice (ISI) Program Plan*
6. EPRI Report 1011898, *Justification for the Removal of the 100 Square Inch Temperbead Weld Repair Limitation*
7. EPRI Report GC-111050, *Ambient Temperature Preheat for Machine GTAW Temperbead Applications*
8. EPRI Report 1013558, *Temperbead Welding Applications – 48 hour Hold for Ambient Temperature Temperbead Welding*
9. EPRI Report BWRVIP-75-A, *Technical Basis for Revisions to Generic Letter 88-01 Inspection Schedules (1012621)*
10. ASME Code Case N-504-3, *Alternate Rules for Repair of Classes 1, 2, and 3 Austenitic Stainless Steel Piping*
11. ASME Code Case N-638-1, *Similar and Dissimilar Metal Welding using Ambient Temperature Machine GTAW Temper Bead Technique*
12. Pilgrim Relief Request PPR-9, *Relief from ASME Section XI Appendix VIII, Supplement 11 Requirements for Structural Overlay Welds (PDI Examination)*

Unit / Inspection Interval Applicability: Pilgrim Nuclear Power Station (PNPS) / Fourth (4th) 10-Year Interval

II. APPLICABLE CODE REQUIREMENT

ASME Section XI, IWA-4421(a) and IWA-4520 require that repair/replacement activities be performed and examined in accordance with the Owner's Requirements and the original Construction Code of the component or system. Alternatively, IWA-4421(b) and (c) allow use of later Editions/Addenda of the Construction Code (or a later different Construction Code such as ASME Section III) and revised Owner Requirements. IWA-4430 and IWA-4600(b) provide alternative welding methods such as temper bead welding when the requirements of Subsection IWA-4421 cannot be met. IWA-4520 requires that welds and weld repairs be performed in accordance with the Construction Code identified in the Repair/Replacement Plan. IWA-4530(a) requires the performance of pre-service examinations based on Subsection IWB-2200 for Class 1 components. Table IWB-2500 prescribes inservice inspection requirements for Class 1 butt welds in piping.

As an alternative to the above, ASME Section XI Code Cases N-504-3 and N-638-1 specify requirements for performing the following:

- Code Case N-504-3 provides alternative requirements to reduce a defect to a flaw of acceptable size in austenitic stainless steel materials by deposition of a structural weld overlay (WOL) on the outside surface of the pipe or component. The NRC has conditionally approved this Case in Regulatory Guide 1.147 with the following condition:

  > "The provisions of Section XI, Nonmandatory Appendix Q, *Weld Overlay Repair of Class 1, 2, and 3 Austenitic Stainless Steel Piping Weldments*, must be met."

- Code Case N-638-1 establishes requirements for performing ambient temperature temper bead welding as an alternative to the preheat and post-work heat treat (PWHT) requirements of the Construction Code. The NRC has conditionally approved this Case in Regulatory Guide 1.147 with the following condition:

  > "UT volumetric examinations shall be performed with personnel and procedures qualified for the repaired volume and qualified by demonstration using representative samples which contain construction type flaws. The acceptance criteria of NB-5330 in the 1998 Edition through 2000 Addenda of Section III apply to all flaws identified within the repaired volume."

III. REASON FOR PROPOSED ALTERNATIVE

Intergranular stress corrosion cracking (IGSCC) in boiling water reactor (BWR) piping was identified as a problem in the United States in the early 1970s. Initially, cracking was only observed in small-bore piping. However, in 1982 cracking caused by IGSCC was also identified in large-bore piping. PNPS manages this condition by performing routine inservice inspections in accordance with ASME Section XI and the inspection requirements of BWRVIP-75-A.

PNPS is presently in Refueling Outage RFO-17. During this outage, the weld overlay (WOL) for the *Jet Pump Instrumentation Nozzle N-9A* was scheduled for ultrasonic (UT) examination to comply with the inspection requirements of BWRVIP-75-A for Category "E"[1] welds. The UT examination procedure and personnel were qualified in accordance with Appendix VIII,

[1] As defined in BWRVIP-75-A, Category "E" welds "are those with known cracks that have been reinforced by an acceptable weld overlay... with subsequent examination by qualified examiners and procedures to verify the extent of cracking."

Supplement 11 as implemented by the Performance Demonstration Initiative (PDI). However, prior to performing the UT examination, PNPS determined that the subject WOL could not be appropriately examined due to its present configuration. See Table 1 and Figure 1 of Attachment 1 for additional details on the existing WOL configuration and materials. The Inservice Inspection (ISI) weld number for the subject WOL is RPV-N9A-1.

The N-9A nozzle WOL was originally installed in September 1984 to repair detected flaws discovered in the 304 stainless steel safe-end base material. The flaws (two) were located in the heat affected zone (HAZ) of the stainless steel safe end base material adjacent to the nozzle N-9A dissimilar metal weld (DMW). The WOL was designed to provide full structural reinforcement of the flawed material assuming a postulated 360° through-wall crack while maintaining ASME Code safety margins. The WOL was installed with Alloy 82 (ERNiCr-3) weld metal.

PNPS performs repair/replacement activities in accordance with the 1998 Edition/2000 Addenda of ASME Section XI. This Edition of ASME Section XI does not include requirements for application of full structural WOLs on DMWs and non-austenitic stainless steels. Moreover, requirements for installing full structural WOLs on DMWs and non-austenitic stainless steels are not presently included in any Edition/Addenda of ASME Section XI (including Code Cases) approved by the NRC. However, the NRC has conditionally approved Code Case N-504-3 in Regulatory Guide 1.147 for installation of WOLs on austenitic stainless steel materials.

Structural weld overlays have been used for years on piping of both BWRs and pressurized water reactors (PWRs) to arrest the growth of existing flaws while establishing a new structural pressure boundary. WOLs on DMWs and non-austenitic stainless steels in BWRs have generally been applied in accordance with various revisions of ASME Code Cases N-504 and N-638. At present, code case revisions N-504-3 and N-638-1 are "conditionally accepted" by the NRC in Regulatory Guide 1.147. Application of these code cases to DMWs and non-austenitic stainless steels requires a relief request since Code Case N-504-3 was written specifically for austenitic stainless steel weldments and Code Case N-638-1 contains some restrictions and requirements that are not applicable to WOLs.

Entergy has initiated this request to propose an alternative to the ASME Section XI Code. PNPS intends to use Code Cases N-504-3 and N-638-1 to modify the existing WOL of the Jet Pump Instrumentation Nozzle N-9A (ISI weld RPV-9A-1). The modification will be performed using Alloy 52M (ERNiCrFe-7A) filler metal to facilitate performance of the required Appendix VIII, Supplement 11 UT examination. See Figure 2 of Attachment 1 for additional details.

IV. PROPOSED ALTERNATIVE

Pursuant to 10 CFR 50.55a(a)(3), Entergy proposes an alternative to specific ASME Section XI Code requirements in Code Cases N-504-3 and N-638-1, as conditionally approved by the NRC in Regulatory Guide 1.147. The proposed alternatives for each ASME Section XI code case are specified below:

A. Code Case N-504-3 (as conditionally approved in Regulatory Guide 1.147)

   1. Code Case N-504-3 and Appendix Q apply strictly to austenitic stainless steel piping and weldments. As an alternative, Entergy proposes to use Code Cases N-504-3 and Appendix Q to perform WOL welding on SA-508, Class 2 low alloy

steel, Alloy 82 welds, and austenitic stainless steel using Alloy 52M (ERNiCrFe-7A) filler metals.

2. Code Case N-504-3, paragraph (b) and Appendix Q, paragraph Q-2000(a) require that weld metal used to fabricate WOLs be low carbon steel (0.035%) austenitic stainless steel. As an alternative, Entergy proposes to perform WOL welding using Alloy 52M (ERNiCrFe-7A). Therefore, this requirement does not apply.

3. Code Case N-504-3, paragraph (e) and Appendix Q, paragraph Q-2000(d) require that as-deposited austenitic weld metal used to fabricate WOLs have a delta ferrite content of at least 7.5 FN or 5 FN under certain conditions. As an alternative, Entergy proposes to perform WOL welding using Alloy 52M (ERNiCrFe-7A) which is purely austenitic. Therefore, this delta ferrite requirement does not apply.

4. Code Case N-504-3, paragraph (f)(1) and Appendix Q, paragraph Q-3000(b)(2) require that the end transition slope of the WOL "not exceed 45°". As an alternative, Entergy proposes to allow the end transition slope to exceed 45° provide the following two conditions are met:

   - A physical restriction along the Jet Pump Instrument Penetration Seal Assembly prevents the WOL end transition slope from being 45° or less.

   - The as-built configuration of the WOL is analyzed by Finite Element Analysis to demonstrate compliance with the applicable stress limits of the Construction Code.

5. Code Case N-504-3, paragraph (h) requires that a system hydrostatic test be performed in accordance with IWA-5000. As an alternative, Entergy proposes to perform a system leakage test in accordance with IWA-5000.

B. Code Case N-638-1 (as conditionally approved in Regulatory Guide 1.147)

1. Code Case N-638-1, paragraph 1.0(a) limits the maximum area of an individual weld to 100 square inches. As an alternative, Entergy proposes to limit the surface area on the ferritic base material to 500 square inches.

2. Code Case N-638-1, paragraph 2.1(j) specifies that the "average values of the three HAZ impact tests shall be equal to or greater than the average values of the three unaffected base metal tests." This requirement applies to acceptance criteria for Charpy V-notch HAZ tests of the welding procedure qualification test coupon. As an alternative, Entergy proposes to use the following acceptance criteria: "The average lateral expansion value of the three HAZ impact test specimens shall be equal to or greater than the average lateral expansion value of the three unaffected base metal test specimens."

3. Code Case N-638-1, paragraph 3.0(c) requires the deposition and removal of at least one weld reinforcement layer for "similar materials" (i.e., ferritic materials). As an alternative, Entergy proposes to exclude this requirement because it does not apply to austenitic weld filler metals.

4. Code Case N-638-1, Section 3.0 does not specifically address verification or monitoring of welding preheat and interpass temperatures. As an alternative, Entergy proposes the following:

   "Preheat and interpass temperatures will be measured using a contact pyrometer. In the first three layers, the interpass temperature will be measured every three to five passes. After the first three layers, interpass temperature measurements will be taken every six to ten passes for the subsequent layers. Contact pyrometers will be calibrated in accordance with approved calibration and control program documents."

5. Code Case N-638-1, paragraph 4.0(b) requires that the final weld surface and the "band" around the final weld surface be examined using surface and ultrasonic examination methods. The "band" referred to in this requirement is defined in paragraph 1.0(d) of N-638-1 as a dimension equal to "1-1/2 times the component thickness or 5 inches, whichever is less". As an alternative, Entergy proposes the following:

   - The WOL and adjacent base material that is within ½" of the WOL (on each side) shall be examined by the liquid penetrant method.

   - The WOL examination volume A-B-C-D in Figure Q-4100-1 of ASME Section XI, Appendix Q shall be UT examined.

6. Code Case N-638-1, paragraph 4.0(b) specifies that surface and volumetric examinations cannot be performed until the completed weld (i.e. WOL) "has been at ambient temperature for at least 48 hours". As an alternative, Entergy proposes that the surface and ultrasonic examinations cannot be performed until at least 48 hours after completion of the third temper bead layer of the WOL.

7. Code Case N-638-1, paragraph 4.0(b) and (e) state that the ultrasonic examination shall be performed in accordance with Appendix I of ASME Section XI and meet the acceptance criteria of IWB-3000. Regarding this UT examination, Regulatory Guide 1.147 includes the following condition:

   "UT volumetric examinations shall be performed with personnel and procedures qualified for the repaired volume and qualified by demonstration using representative samples which contain construction type flaws. The acceptance criteria of NB-5330 in the 1998 Edition through 2000 Addenda of Section III apply to all flaws identified within the repaired volume.

   As an alternative, Entergy proposes to perform this UT acceptance examination in accordance with the requirements and acceptance criteria of Appendix Q, Section Q-4000.

V. BASIS FOR PROPOSED ALTERNATIVE

A. Proposed Alternative for Modifying the Existing WOL

Entergy intends to modify the existing WOL on Jet Pump Instrumentation Nozzle N-9A in accordance with ASME Section XI Code Case N-504-3 (as supplemented by Nonmandatory Appendix Q) and Code Case N-638-1 using the proposed alternatives specified in Section IV of this Request. As previously mentioned, these code cases have been conditionally approved by the NRC in Regulatory Guide 1.147, Revision 15.

The modification of the nozzle N-9A WOL provide an acceptable methodology for preventing potential failures of susceptible materials due to IGSCC. This position is based on several facts. First, the existing WOL will be modified with Alloy 52M weld metal which is resistant to IGSCC. See Attachment 1, Figure 2. The WOL modification should result in improved compressive residual stress profiles in the underlying weld and base materials. However, due to the complexities associated with the modification, this assumption will be validated by finite element analysis. Post-overlay preservice and inservice inspection requirements will ensure that structural integrity is maintained for the life of the plant. The proposed weld overlays will also meet the applicable stress limits from ASME Section III. Crack growth evaluations of conservatively postulated flaws, considering IGSCC and fatigue, will demonstrate that structural integrity of the component will be maintained.

As stated above, the modification to the subject WOL will be applied using Alloy 52M filler metal. However, Alloy 52M weld metal has a demonstrated sensitivity to certain impurities, such as sulfur, when deposited onto austenitic stainless steel base materials. Therefore, if the impurity level is sufficiently high, it may become necessary to deposit an austenitic buffer layer prior to installation of the WOL. While this condition has been limited to PWR applications, Entergy has developed a contingency to install a buffer layer should this unexpected condition occur. If required, a buffer layer of ER308L austenitic stainless steel filler metal will be deposited across the austenitic stainless steel materials. While the balance of this layer could be deposited with Alloy 52M weld metal, an Alloy 82 bridge bead (or transitional bead) would be deposited over the fusion line between the existing Alloy 82 weld and stainless steel safe-end. The bridge bead will be deposited with ERNiCrFe-3 filler metal. The ER308L filler metal will have a delta ferrite content of 5 – 15 FN as reported on the CMTR. It will be deposited with a welding procedure and welders that have been qualified in accordance with ASME Section XI. Liquid penetrant (PT) examinations will be performed prior to and after deposition of the buffer layer. The second PT examination is performed to ensure that the completed buffer layer is free from cracks and other unacceptable indications prior to deposition of the Alloy 52M WOL. The austenitic stainless steel buffer layer, if required, will not be credited toward the design thickness of the structural WOL.

1. Modified WOL Design and Verification

The fundamental design basis for full structural WOLs is to maintain the original design margins with no credit taken for the underlying IGSCC-susceptible weldments. The assumed design basis flaw for the purpose of structural sizing of the WOL is a flaw completely around the circumference (360°) and 100% through the original wall thickness of the dissimilar metal and stainless steel welds. The specific analyses and verifications to be performed are summarized as follows:

- A nozzle-specific stress analysis will be preformed to establish a residual stress profile in the WOL and the underlying welds and base materials. The analyses will simulate application of the existing WOL and the current modification to determine the final residual stress profile. Entergy believes that the post-WOL residual stress profile will be improved due to the WOL modification.
- Fracture mechanics analyses will also be performed to predict crack growth of all postulated and previously detected flaws. Crack growth due to IGSCC and fatigue will be analyzed. The crack growth analyses will consider all design loads and transients, plus the post-WOL and through-wall residual stress distributions. The analyses should demonstrate that postulated flaws will not degrade the design basis for the WOL.
- The analyses will demonstrate that applying the weld overlays does not impact the conclusions of the existing nozzle stress reports. The ASME Code, Section III primary stress criteria will continue to be met.
- Shrinkage will be measured during the WOL application. Shrinkage stresses at other locations in the piping systems arising from the WOL will be demonstrated not to have an adverse effect on the systems. Clearances of affected supports and restraints will be checked after the overlay repair and will be reset within the design ranges if required.
- The total added weight on the piping systems due to the WOL will be evaluated for potential impact on piping system stresses and dynamic characteristics.
- The as-built dimensions of the WOL will be measured and evaluated to demonstrate that they meet or exceed the minimum design dimensions of the WOL.

2. Suitability of Proposed Alternatives to ASME Section XI Code Case N-504-3 and Appendix Q

WOLs have been used for repair and mitigation of cracking in BWRs since the early 1980s. In Generic Letter (GL) 88-01, *NRC Position on Intergranular Stress Corrosion Cracking (IGSCC) in BWR Austenitic Stainless Steel Piping*, the NRC approved the use of ASME Section XI acceptance standards for determining the acceptability of installed WOLs. Accordingly, the existing WOL associated with nozzle N-9A will be modified in accordance with ASME Section XI Code Case N-504-3 and Appendix Q. Compliance with Appendix Q is required by Regulatory Guide 1.147. However, as described in Section IV of this Request, Entergy has proposed several alternatives to Code Case N-504-3 and Appendix Q that are necessary to support the modification of the existing WOL associated with nozzle N-9A. The suitability of the proposed alternatives is provided below.

(a) Code Case N-504-3 and Appendix Q apply strictly to austenitic stainless steel piping and weldments. As an alternative, Entergy has proposed to use Code Cases N-504-3 and Appendix Q to perform WOL welding on SA-508, Class 2 low alloy steel, Alloy 82 welds, and austenitic stainless steel

using Alloy 52M (ERNiCrFe-7A) filler metals. This proposed alternative is acceptable because the WOL design, fabrication, examination, and preservice/inservice inspection requirements of Code Case N-504-3 and Appendix Q may also be applied to nickel alloy WOLs of non-asustenitic stainless steels such as low alloy steels and nickel alloys. While some material requirements in Code Case N-504-3 and Appendix Q may only apply to austenitic stainless steels, Entergy has identified these requirements and proposed alternatives to appropriately address them.

(b) Code Case N-504-3, paragraph (b) and Appendix Q, paragraph Q-2000(a) require that weld metal used to fabricate WOLs be low carbon steel (0.035%) austenitic stainless steel. This requirement was included in Code Case N-504-3 and Appendix Q to reduce the sensitization potential of the austenitic stainless steel WOL, thereby reducing its susceptibility to IGSCC. As an alternative, Entergy has proposed to perform WOL welding using Alloy 52M (ERNiCrFe-7A) weld metal. While carbon content is not a critical factor in assessing resistance of nickel alloys to IGSCC, the chromium content is. This point has been clearly documented in Section 2.2 of EPRI Technical Report MRP-115.

> "The only well explored effect of the compositional differences among the weld alloys on IGSCC is the influence of chromium. Buisine, et al. evaluated the IGSCC resistance of nickel-based weld metals with various chromium contents ranging from about 15% to 30% chromium. Testing was performed in doped steam and primary water. Alloy 182, with about 14.5% chromium, was the most susceptible. Alloy 82 with 18-20% chromium took three or four times longer to crack. For chromium contents between 21 and 22%, no stress corrosion crack initiation was observed..."

To conclude, Alloy 52M weld metal has high chromium content (28 – 31.5%); therefore, it has excellent resistance to IGSCC.

(c) Code Case N-504-3, paragraph (e) and Appendix Q, paragraph Q-2000(d) require that as-deposited austenitic weld metal used to fabricate WOLs have a delta ferrite content of at least 7.5 FN or 5 FN under certain conditions. This requirement was included in Code Case N-504-3 and Appendix Q to reduce the sensitization potential of the austenitic stainless steel WOL, thereby reducing its susceptibility to IGSCC. As an alternative, Entergy has proposed to perform WOL welding using Alloy 52M (ERNiCrFe-7A) weld metal which has a purely austenitic microstructure. Therefore, the requirement to measure delta ferrite does not apply in this application. The susceptibility of nickel alloys to IGSCC is dependant on its chromium content as explained above. Furthermore, the chromium content of the first layer of Alloy 52M weld metal could be reduced due to dilution with the underlying base and weld materials. Because this is the case, Entergy has self-imposed the following restriction on the first layer of the WOL:

> "The first layer of Alloy 52M weld metal deposited may not be credited toward the required thickness. Alternatively, a diluted layer may be credited toward the required thickness, provided the portion of the layer

over the austenitic base material, austenitic weld, and the associated dilution zone from an adjacent ferritic base material contains at least 20% chromium. The chromium content of the deposited weld metal may be determined by chemical analysis of the production weld or from a representative coupon taken from a mockup prepared in accordance with the WPS (or a representative WPS) for the production weld."

(d) Code Case N-504-3, paragraph (f)(1) and Appendix Q, paragraph Q-3000(b)(2) require that the end transition slope of the WOL "not exceed 45°". It is Entergy's intent to comply with this requirement. However, the close proximity of the WOL to the instrument lines of the Jet Pump Instrument Penetration Seal Assembly limits Entergy's ability to lengthen the WOL along the penetration seal assembly. This interference could necessitate the design and installation of an end transition slope that exceeds 45°. Should this condition exists, Entergy will analyze the as-built configuration of the WOL using Finite Element Analysis to demonstrate compliance with the applicable stress limits of the Construction Code or ASME Section III.

(e) Code Case N-504-3, paragraph (h) requires that a system hydrostatic test be performed in accordance with IWA-5000 when a flaw penetrates the full thickness of the pressure boundary. For non-through-wall flaw conditions, Code Case N-504-3 allows performance of a system leakage test. Pressure testing is not addressed by Appendix Q. As an alternative, Entergy proposes to perform a system leakage test in accordance with IWA-5000. This proposal is consistent with the pressure testing requirements of IWA-4540 and Code Case N-416-3, except that, the NDE requirements of IWA-4540/N-416-3 would not apply to a WOL. The WOL acceptance examination will include both liquid penetrant and UT examinations. Liquid penetrant examinations will be performed in accordance with ASME Section III while the UT examination will be performed in accordance with Appendix VIII, Supplement 11 of ASME Section XI as implemented by PDI. The UT acceptance standards are as specified in Tables IWB-3514-2 and 3.

3. Suitability of Proposed Alternatives to Code Case N-638-1

An ambient temperature temper bead welding technique will be used when welding on the ferritic base material of RPV nozzle N-9A in lieu of the post-weld heat treatment requirements of ASME Section III. Research by the Electric Power Research Institute (EPRI) and other organizations on the use of an ambient temperature temper bead process using the machine gas tungsten arc welding (GTAW) process is documented in EPRI Report GC-111050 (Reference 7). According to the EPRI report, repair welds performed with an ambient temperature temper bead procedure utilizing the machine GTAW process exhibit mechanical properties equivalent to or better than those of the surrounding base material. Laboratory testing, analysis, successful procedure qualifications, and successful repairs have all demonstrated the effectiveness of this process.

The ambient temperature temper bead technique of Code Case N-638-1 will be used. Code Case N-638-1 was conditionally approved by the NRC in Regulatory Guide 1.147. The suitability of the proposed alternatives is provided below.

(a) Code Case N-638-1, paragraph 1.0(a) limits the maximum area of an individual weld to 100 square inches. Entergy's proposed alternative limits the surface area to 500 square inches. The technical basis for this change is provided in Attachment 2.

(b) Code Case N-638-1, paragraph 2.1(j) specifies that the "average values of the three HAZ impact tests shall be equal to or greater than the average values of the three unaffected base metal tests." As an alternative, Entergy proposes to use the following alternative acceptance criteria:

> "The average lateral expansion value of the three HAZ impact test specimens shall be equal to or greater than the average lateral expansion value of the three unaffected base metal test specimens."

The acceptance criteria for Charpy V-notch HAZ testing in Code Case N-638-1 is misleading and inconsistent with the specified acceptance criteria in Section XI applicable to other Class 1 components, since it implies that all three parameters - lateral expansion, absorbed energy, and percent shear fracture – must be equal to or exceed the base material values. Code Case N-638-2 corrected paragraph 2.1(j) to state that Charpy V-notch acceptance criteria is based on the "average lateral expansion values" rather than the average of all three values. This change clarified the intent of the code case and aligned its acceptance criteria with NB-4330 of ASME Section III and IWA-4620 and IWA-4630 of ASME Section XI.

(c) Code Case N-638-1, paragraph 3.0(c) requires the deposition and removal of at least one weld reinforcement layer for "similar materials" (i.e., ferritic materials). As an alternative, Entergy proposes to exclude this requirement because it does not apply to austenitic weld materials. This requirement only applies when welding is performed using ferritic weld metal. When temper bead welding is performed with ferritic weld metal, each ferritic weld layer must be tempered by the heat supplied from a subsequent weld layer. Because the final layer of a completed weld or weld repair would be untempered, paragraph 3.0(c) requires the deposition and removal of an additional layer (weld reinforcement) to ensure that the final layer of the completed weld is tempered. Since only austenitic weld metal (i.e., Alloy 52M) will be used to fabricate the proposed WOL, deposition and removal of a weld reinforcement layer is not required.

(d) Code Case N-638-1, Section 3.0 does not specifically address verification or monitoring of welding preheat or interpass temperatures. Therefore, Entergy has proposed the following controls:

> "The preheat and interpass temperatures will be measured using a contact pyrometer. In the first three layers, the interpass temperature will be measured every three to five passes. After the first three layers, interpass temperature measurements will be taken every six to ten passes for the subsequent layers. Contact pyrometers will be calibrated in accordance with approved calibration and control program documents."

The proposed preheat and interpass temperature controls are based on field experience with depositing WOLS. Interpass temperatures beyond the third layer have no impact on the metallurgical properties of the low alloy steel heat affected zone.

(e) Code Case N-638-1, paragraph 4.0(b) requires that the final weld surface and the band around the weld area (1.5t or 5", whichever is less) shall be examined using surface and ultrasonic examination methods. As an alternative, Entergy has proposed the following as an alternative:

- The WOL and adjacent base material within ½" of the WOL shall be examined by the liquid penetrant method.
- The WOL examination volume A-B-C-D in Figure Q-4100-1 of ASME Section XI, Appendix Q shall be ultrasonically examined.

The requirement in Code Case N-638-1, paragraph 4.0(b) to nondestructively examine the entire 1.5T band was established to address hydrogen cracking concerns. While the code case requirement is overly conservative, the proposed alternative is more than capable of detecting hydrogen cracking in ferritic materials. First of all, if hydrogen cracking were to occur, it would occur in the heat affected zone of the ferritic base material either below or immediately adjacent to the WOL. Therefore, it is unnecessary to examine the entire 1.5T band. Hydrogen cracking is not a concern in austenitic materials. If it occurs in the ferritic base material below the WOL, it will be detected by the ultrasonic examination which will interrogate the entire WOL including the interface and heat affected zone beneath the WOL. If it occurs in the ferritic base material immediately adjacent to the WOL, it will be detected by the liquid penetrant examination which is performed at least ½ inch on each side of the WOL.

(f) Code Case N-638-1, paragraph 4.0(b) specifies that surface and volumetric examinations cannot be performed until the completed weld (i.e. WOL) "has been at ambient temperature for at least 48 hours". As an alternative, Entergy proposes that surface and ultrasonic examinations cannot be performed until at least 48 hours after completion of the third temper bead layer of the WOL. The 48-hour hold is specified to allow sufficient time for hydrogen cracking to occur (if it is to occur) in the heat affected zone of ferritic materials prior to performing final NDE. However, based on extensive research and industry experience, EPRI has provided a technical basis for starting the 48-hour hold after completing the third temper bead weld layer rather than waiting for the weld overlay to cool to ambient temperature (weld layers beyond the third layer are not designed to provide tempering to the ferritic heat affected zone when performing ambient temperature temper bead welding). EPRI has documented their technical basis in technical report 1013558, *Temper bead Welding Applications – 48 Hour Hold Requirements for Ambient Temperature Temper bead Welding* (Reference 8). The technical data provided by EPRI in their report is based on testing performed on SA-508, Class 2 low alloy steels and other P-Number 3, Group 3 materials. This point is important because the PNPS

N-9A nozzle was manufactured from SA-508, Class 2 steel. After evaluating the issues relevant to hydrogen cracking such as microstructure of susceptible materials, availability of hydrogen, applied stresses, temperature, and diffusivity and solubility of hydrogen in steels, EPRI concluded the following on page 5-2 of the report: "There appears to be no technical basis for waiting 48 hours after cooling to ambient temperature before beginning the NDE of the completed weld. There should be no hydrogen present, and even if it were present, the temper bead welded component should be very tolerant of the moisture." Page 5-2 of the report also notes that over 20 weld overlays and 100 repairs have been performed using temper bead techniques on low alloy steel components over the last 20 years. During this time, there has never been an indication of hydrogen cracking by the nondestructive examination performed after the 48 hour hold or by subsequent inservice inspection.

In addition, the ASME Section XI Committee approved Revision 4 to Code Case N-638 (i.e., N-638-4) in October 2006 to allow the 48-hour hold to begin after completing the third weld layer when using austenitic filler metals. Paragraph 4(a)(2) of the code case states in part: "When austenitic materials are used, the weld shall be nondestructively examined after the three tempering layers (i.e., layers 1, 2, and 3) have been in place for at least 48 hours." The ASME Section XI technical basis for this change is documented in the white paper contained in ASME C&S Connect for Code Case N-638-4. The ASME white paper points out that introducing hydrogen to the ferritic heat affected zone is limited to the first weld layer since this is the only weld layer that makes contact with the ferritic base material. While the potential for introducing hydrogen to the ferritic heat affected zone is negligible during subsequent weld layers, these layers provide a heat source that accelerates the dissipation of hydrogen from the ferritic heat affected zone in non-water backed applications. Furthermore, the solubility of hydrogen in austenitic materials such as Alloy 52M is much higher than that of ferritic materials, while the diffusivity of hydrogen in austenitic materials is lower than that of ferritic materials. As a result, hydrogen in the ferritic heat affected zone tends to diffuse into the austenitic weld metal which has a much higher solubility for hydrogen. This diffusion process is enhanced by heat supplied in subsequent weld layers. Like the EPRI report, the ASME white paper concludes that there is sufficient delay time to facilitate detecting potential hydrogen cracking when NDE is performed 48 hours after completing the third weld layer.

(g) Code Case N-638-1, paragraph 4.0(b) and (e) state that the ultrasonic examination shall be performed in accordance with Appendix I of ASME Section XI and meet the acceptance criteria of IWB-3000. Regarding this UT examination, Regulatory Guide 1.147 includes the following condition:

> "UT volumetric examinations shall be performed with personnel and procedures qualified for the repaired volume and qualified by demonstration using representative samples which contain construction type flaws. The acceptance criteria of NB-5330 in the 1998 Edition through 2000 Addenda of Section III apply to all flaws identified within the repaired volume.

As an alternative, Entergy has proposed to perform the UT acceptance examination in accordance with the requirements and acceptance criteria of Appendix Q, Article Q-4000. The UT examination requirements and acceptance standards in Appendix Q, Article Q-4000 were developed specifically for WOLs unlike those in Code Case N-638-1. According to Article Q-4000, UT examination procedures and personnel are qualified in accordance with Appendix VIII of ASME Section XI. Supplement 11 of Appendix VIII specially addresses qualification requirements for WOLs. When UT examinations are performed in accordance with Appendix VIII, Supplement 11 (as implemented through PDI), the examinations are considered more sensitive for detecting fabrication and service-induced flaws than traditional radiographic and ultrasonic examination methods. Furthermore, construction-type flaws have been included in the PDI qualification sample sets for evaluating procedures and personnel. Appendix Q, Article Q-4100 also establishes UT acceptance standards for WOL examinations. Similar to NB-5330, the UT examination must assure adequate fusion with the base material and detect welding flaws such as interbead lack of fusion, inclusions, and cracks. Detected planar and laminar flaws are required to meet the acceptance standards of Tables IWB-3514-2 and 3, respectively. Paragraph Q-4100(c) also limits the reduction in coverage due to a laminar flaw to less than 10% while uninspectable volumes are assumed to contain the largest radial planar flaw that could exist within the volume. Therefore, the Article Q-4100 qualification requirements and acceptance standards are equivalent or more conservative than those specified in Regulatory Guide 1.147.

4. Additional NDE Information

The length, surface finish, and flatness requirements will be specified in the WOL overlay design to facilitate inspection of the examination volumes shown in Figures Q-4100-1 and Q-4300-1 of ASME Section XI, Appendix Q. Figure Q-4100-1 describes the examination volume for acceptance examinations while Figure Q-4300-1 describes the examination for preservice and inservice examinations. The examinations required by Code Case N-504-3/Appendix Q and Code Case N-638-1 as amended by the proposed alternatives of this Request will provide adequate assurance that the integrity of the Nozzle N-9A WOL is consistent with the structural integrity assumptions of the design. The following should also be noted:

- As discussed above, the modified WOL will be UT examined in accordance with Appendix VIII, Supplement 11 as implemented by PDI. Examination coverage for the acceptance examination has been estimated to be 100%. Examination coverage for the preservice/inservice examination has been estimated to be greater than 90%.
- The EPRI PDI qualification program for full structural weld overlays does not comply with all provisions of Appendix VIII, Supplement 11 of ASME Section XI as endorsed by the NRC in 10CFR50.55a. However, PNPS has addressed this issued under Pilgrim Relief Request PRR-9 which was approved by the NRC in an SER dated March 22, 2006.

5. NRC Submittals

As listed in Enclosure 2, Entergy will submit the following information to the NRC within fourteen (14) days from completing the final ultrasonic examinations of the completed weld overlays:

- Weld overlay examination results including a listing of indications detected[2]
- Disposition of indications using the standards of ASME Section XI, Subsection IWB-3514-2 and/or IWB-3514-3 criteria and, if possible, the type and nature of the indications[3]
- A discussion of any repairs to the WOL material and/or base metal and the reason for the repairs.

Entergy will also submit to the NRC a stress analysis summary demonstrating that the N-9A nozzle WOL perform its intended design function after WOL installation. The stress analysis report will include results showing that the requirements of NB-3200 and NB-3600 of the ASME Code, Section III are satisfied. The stress analysis will also include results showing that the requirements of Subsection IWB-3000 of the ASME Code, Section XI, are satisfied. The results will show that the postulated crack including its growth in the nozzles will not adversely affect the integrity of the overlaid welds. This information will be submitted to the NRC within 60 days of completing PNPS refueling outage RFO-17.

VI. CONCLUSION

10 CFR 50.55a(a)(3) states:

"Proposed alternatives to the requirements of (c), (d), (e), (f), (g), and (h) of this section or portions thereof may be used when authorized by the Director of the Office of Nuclear Reactor Regulation. The applicant shall demonstrate that:

(i) The proposed alternatives would provide an acceptable level of quality and safety, or

(ii) Compliance with the specified requirements of this section would result in hardship or unusual difficulty without a compensating increase in the level of quality and safety."

Entergy believes that the proposed alternatives of this request provide an acceptable level of quality and safety. The proposed WOL will be installed using Nickel Alloy 52M filler metal that is resistant to IGSCC. While this is the case, the WOL is expected to create compressive residual stresses along the inside diameter of the original weld, which prevents the initiation of new IGSCC. Finally, preservice and inservice inspection of the weld overlay will be performed to

[2] The recording criteria of the ultrasonic examination procedure to be used for the WOL examination requires that all indications, regardless of amplitude, be investigated to the extent necessary to provide accurate characterization, identity, and location. Additionally, the procedure requires that all indications, regardless of amplitude, that cannot be clearly attributed to the geometry of the overlay configuration be considered flaw indications.

[3] The ultrasonic examination procedure requires that all suspected flaw indications are to be plotted on a cross-sectional drawing of the weld and that the plots should accurately identify the specific origin of the reflector.

ensure structural integrity is maintained. Therefore, Entergy requests that the NRC staff authorize the proposed alternative in accordance with 10 CFR 50.55a(a)(3).

VII DURATION OF PROPOSED ALTERNATIVE

The proposed alternative is applicable to the fourth (4th) 10-Year ISI interval for PNPS (July 1, 2005 to June 30, 2015).

Entergy Letter No.: 2.09.032, PRR-19

Attachment 1 to Enclosure 1

Jet Pump Instrumentation Nozzle N-9A Details

TABLE 1

JET PUMP INSTRUMENTATION NOZZLE N-9A DETAILS

Nozzle Description	Nozzle Material	Nozzle to Safe End Weld Material	Safe End Material	Safe End to Penetration Seal Weld Material	Penetration Seal Material	Figure No.
Jet Pump Instrumentation Nozzle N-9A	A-508, Class 2[1]	Alloy 182[2]	SA-182, F304[3]	Alloy 182[4]	SA-182, F304[3]	1

Notes:

1. A-508, Class 2 is P-Number 3, Group 3 low alloy steel.
2. Weld includes butter on nozzle and safe end.
3. SA-182, F304 is P-Number 8 stainless steel.
4. Weld includes butter on safe end and penetration seal.

Pilgrim RPV N9A Jet Pump Instrumentation Nozzle 5" OD

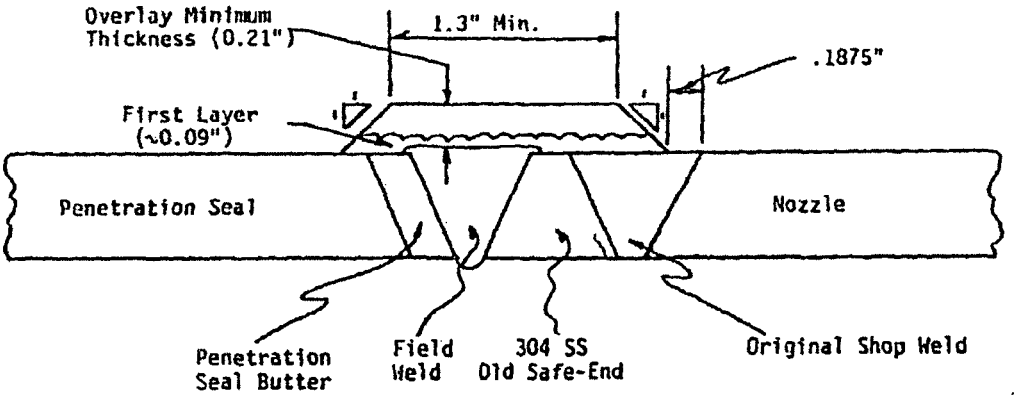

Figure 1 Existing N9A Weld Configuration (1984 Repair)

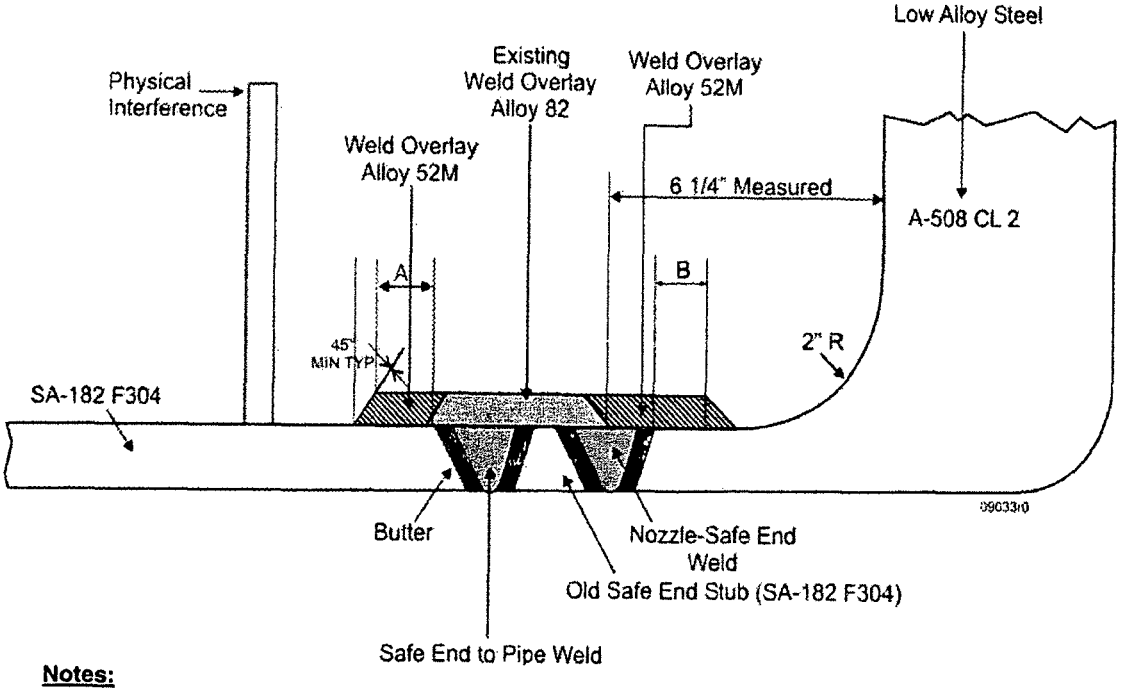

Notes:

0.22"min WOL Thickness A ≅ 0.6" Due to Physical Interference B ≅ 1" Minimum

Final configuration of the WOL will include one to two layers of 52M over the entire length of the overlay.

Figure 2 Proposed Weld Overlay

Entergy Letter No.: 2.09.032, PRR-19

Attachment 2 to Enclosure 1

**Technical Basis for Alternative to ASME Code Case N-638-1,
Area Limitation Change to 500 Square Inches**

TECHNICAL BASIS FOR ALTERNATIVE TO ASME CODE CASE N-638-1, AREA LIMITATION CHANGE TO 500 SQUARE INCHES

IWA-4600 and versions of ASME Code Case N-638 prior to Revision 3 contained a limit of 100 square inches for the surface area of a temperbead weld over ferritic base metal. The area limitation in Attachment 3 is 500 square inches. The proposed weld overlay will be greater than 100 square inches but less than 500 square inches.

Technical justification for allowing weld overlays on ferritic materials with surface areas up to 500 square inches is provided in the white paper supporting the changes in ASME Code Case N-638-3 and EPRI Report 1011898 (Ref. 6). The ASME white paper notes that the original limit of 100 square inches in Code Case N-638-1 was arbitrary. It cites evaluations of a 12-inch diameter nozzle weld overlay to demonstrate adequate tempering of the weld heat affected zone (HAZ) (Section 2a of the white paper), residual stress evaluations demonstrating acceptable residual stresses in weld overlays ranging from 100 to 500 square inches (Section 2b of the white paper), and service history in which weld repairs exceeding 100 square inches were NRC approved and applied to DMW nozzles in several BWR and PWR (Section 3c of the white paper) applications. Some of the cited repairs are greater than 15 years old, and have been inspected several times with no evidence of any continued degradation.

It is important to note that the above theoretical arguments and empirical data have been verified in practice by extensive field experience with temperbead weld overlays, with ferritic material coverage ranging from less than 10 square inches up to and including 325 square inches. The table below provides a partial list of such applications.

Date	Plant	Component	Nozzle Diameter (in)	Approx. LAS Coverage (in^2)
April 2007	Pilgrim	Recirc. Inlet N2K	28	300
November 2006	SONGS Unit 3	PZR spray nozzle Safety/relief nozzles PZR surge nozzle	5.1875 8 12.75	40 60 110
November 2006	Catawba Unit 1	PZR spray nozzle Safety/relief nozzles PZR surge nozzle	4 6 14	30 50 120
November 2006	Oconee Unit 1	PZR spray nozzle Safety/relief nozzles PZR surge nozzle HL Surge Nozzle	4.5 4.5 10.875 10.75	30 30 105 70
October 2006	McGuire Unit 2	PZR spray nozzle Safety/relief nozzles PZR surge nozzle	4 6 14	30 50 120
April 2006	Davis-Besse	Hot leg drain nozzle	4	16
February 2006	SONGS Unit 2	PZR spray nozzle Safety/relief nozzles	8 6	50 28

Date	Plant	Component	Nozzle Diameter (in)	Approx. LAS Coverage (in^2)
November 2005	Kuosheng Unit 2	Recirc. outlet nozzle	22	250
April 2004	Susquehanna Unit 1	Recirc. inlet nozzle Recirc. outlet nozzle	12 28	100 325
November 2003	TMI Unit 1	Surge line nozzle	11.5	75
October 2003	Pilgrim	CRD return nozzle	5	20
October 2002	Peach Bottom Units 2 & 3	Core spray nozzle Recirc. outlet nozzle CRD return nozzle	10 28 5	50 325 20
October 2002	Oyster Creek	Recirc. outlet nozzle	26	285
December 1999	Duane Arnold	Recirc. inlet nozzle	12	100
June 1999	Perry	Feedwater nozzle	12	100
June 1998	Nine Mile Point Unit 2	Feedwater nozzle	12	100
March 1996	Brunswick Units 1 & 2	Feedwater nozzle	12	100
February 1996	Hatch Unit 1	Recirc. inlet nozzle	12	100
January 1991	River Bend	Feedwater nozzle	12	100
March 1986	Vermont Yankee	Core spray nozzle	10	50

It can be seen from the information above that the original DMW weld overlay was applied over 20 years ago, and weld overlays with low alloy steel coverage in the 100-square inch range have been in service for 5 to 15 years. Several overlays have been applied with low alloy steel coverage significantly greater than the 100 square inches. These overlays have been examined with PDI qualified techniques, in some cases multiple times, and none have shown any signs of new cracking or growth of existing cracks.

Enclosure 2

Entergy Letter No.: 2.09.032, PRR-19

List of Regulatory Commitments

List of Regulatory Commitments

The following table identifies those actions committed to by Entergy in this document. Any other statements in this submittal are provided for information purposes and are not considered to be regulatory commitments.

COMMITMENT	TYPE (Check one)		SCHEDULED COMPLETION DATE (If Required)
	ONE-TIME ACTION	CONTINUING COMPLIANCE	
Weld overlay examination results including a listing of indications detected.	X		14 days after completing the final ultrasonic examinations of the completed weld overlays
Disposition of indications using the standards of ASME Section XI, Subsection IWB-3514-2 and/or IWB-3514-3 criteria and, if possible, the type and nature of the indications	X		14 days after completing the final ultrasonic examinations of the completed weld overlays
A discussion of any repairs to the weld overlay material and/or base metal and the reason for the repairs.	X		14 days after completing the final ultrasonic examinations of the completed weld overlays
Submit to the NRC a stress analysis summary demonstrating that the N-9A nozzle to safe-end DMW will perform its intended design function after weld overlay installation	X		Within 60 days of completing PNPS Refueling Outage RFO 17

ATTACHMENT 3

TO ENTERGY LETTER NO 2.11.015

NRC Approval Letter, Relief Request (PRR-19), Install a Weld Overlay on Jet Pump Instrumentation Nozzle Weld RPV-N9-1- Pilgrim Nuclear Power Station (TAC No. ME1151), dated September 11, 2009 (14 Pages)

UNITED STATES
NUCLEAR REGULATORY COMMISSION
WASHINGTON, D.C. 20555-0001

September 11, 2009

1.09.055

Site Vice President
Entergy Nuclear Operations, Inc.
Pilgrim Nuclear Power Station
600 Rocky Hill Road
Plymouth, MA 02360-5508

SUBJECT: RELIEF REQUEST (PRR)-19, INSTALL A WELD OVERLAY ON JET PUMP INSTRUMENTATION NOZZLE WELD RPV-N9A-1 - PILGRIM NUCLEAR POWER STATION (TAC NO. ME1151)

Dear Sir or Madam:

By letter dated May 1, 2009 (Agencywide Document and Management System (ADAMS) Accession No. ML091270162), as supplemented by letter dated May 7, 2009 (ML091320656), Entergy Nuclear Operations, Inc. (the licensee) requested Nuclear Regulatory Commission (NRC) staff review and approval of Pilgrim Relief Request (PRR)-19 to the requirements of the American Society of Mechanical Engineers Boiler and Pressure Vessel Code (ASME Code), Section XI for the Pilgrim Nuclear Power Station (Pilgrim) to utilize ASME Code Cases N-638-1, "Similar and Dissimilar Metal Welding Using Ambient Temperature Machine GTAW Temper Bead Technique, Section XI, Division 1," and N-504-3, "Alternative Rules for Repair of Class 1, 2, and 3 Austenitic Stainless Steel Piping, Section XI, Division 1," as modified by the licensee. Pilgrim Relief Request (PRR)-19 would permit the installation of a weld overlay on the RPV-N9A-1 Jet Pump Instrumentation Nozzle Weld at Pilgrim. The results of the NRC staff's review are provided in the enclosed safety evaluation.

If you have any questions regarding this approval, please contact the Pilgrim Project Manager, James Kim, at 301-415-4125.

Sincerely,

Douglas V Pickett for

Nancy L. Salgado, Chief
Plant Licensing Branch 1-1
Division of Operating Reactor Licensing
Office of Nuclear Reactor Regulation

Docket No. 50-293

Enclosure:
As stated

cc w/encl: Distribution via ListServ

UNITED STATES
NUCLEAR REGULATORY COMMISSION
WASHINGTON, D.C. 20555-0001

SAFETY EVALUATION BY THE OFFICE OF NUCLEAR REACTOR REGULATION

REQUEST FOR RELIEF (PRR)-19

ENTERGY NUCLEAR OPERATIONS, INC.

PILGRIM NUCLEAR POWER STATION

DOCKET NO. 50-293

1.0 INTRODUCTION

By letter dated May 1, 2009, as supplemented by letter dated May 7, 2009, Entergy Operations, Inc. (Entergy, the licensee), requested relief from certain American Society of Mechanical Engineers Boiler and Pressure Vessel Code (ASME Code) requirements at Pilgrim Nuclear Power Station (PNPS). As an alternative to the ASME Code requirements, the licensee proposes to implement a weld overlay (WOL) repair in accordance with ASME Code Cases N-638-1, "Similar and Dissimilar Metal Welding Using Ambient Temperature Machine GTAW [Gas Tungsten Arc Welding] Temper Bead Technique, Section XI, Division 1," and N-504-3, "Alternative Rules for Repair of Class 1, 2, and 3 Austenitic Stainless Steel Piping, Section XI, Division 1," as modified by the licensee in its submittal letters. The alternatives proposed in Relief Request (PRR)-19, would be used to perform a WOL on the Jet Pump Instrumentation Nozzle Weld, RPV-N9A-1 at Pilgrim. The Nuclear Regulatory Commission (NRC) verbally authorized the licensee's requested alternative in a teleconference on May 11, 2009. This safety evaluation (SE) documents the basis for the NRC staff's verbal authorization and is written consistent with the information available at the time the verbal authorization was given.

2.0 REGULATORY REQUIREMENTS

Pursuant to Title 10 of the *Code of Federal Regulations* (10 CFR), paragraph 50.55a(g)(4), ASME Code Class 1, 2, and 3 components (including supports) must meet the requirements, except the design and access provisions and the preservice examination requirements, set forth in the ASME Code, Section XI, "Rules for Inservice Inspection (ISI) of Nuclear Power Plant Components," to the extent practical within the limitations of design, geometry, and materials of construction of the components. The regulations require that inservice examination of components and system pressure tests conducted during the first 10-year interval and subsequent intervals comply with the requirements in the latest edition and addenda of Section XI of the ASME Code incorporated by reference in 10 CFR 50.55a(b) 12 months prior to the start of the 120-month interval, subject to the limitations and modifications listed therein. The code of record for the current fourth PNPS ISI interval is the 1998 Edition with 2000 Addenda of the ASME Code, Section XI.

Enclosure

Pursuant to 10 CFR 50.55a(a)(3) alternatives to requirements may be authorized by the NRC if the licensee demonstrates that: (i) the proposed alternatives provide an acceptable level of quality and safety, or (ii) compliance with the specified requirements would result in hardship or unusual difficulty without a compensating increase in the level of quality and safety. The licensee submitted the subject relief request, pursuant to 10 CFR 50.55a(a)(3)(i), which proposed an alternative to the implementation of the ASME Code, Section XI requirements based on ASME Code Cases N-638-1 and N-504-3 as modified by the licensee for the deposition of a WOL for the remaining service life of the identified component. Regulatory Guide (RG) 1.147, "Inservice Inspection Code Case Acceptability, ASME Code, Section XI, Division 1," lists the code cases that are acceptable to the NRC for application in licensees' ASME Code, Section XI ISI programs. A licensee may use a code case specified in the RG without prior approval by the NRC if it meets the conditions specified for the code case.

3.0 LICENSEE'S PROPOSED ALTERNATIVE

3.1 Background

During Refueling Outage (RFO)-17, the WOL for the Jet Pump Instrumentation Nozzle N-9A was scheduled for ultrasonic (UT) examination to comply with the inspection requirements of Boiling Water Reactor Vessels and Internal Project (BWRVIP)-75-A: BWR Vessel and Internals Project, "Technical Basis for Revisions to Generic Letter 88-01 Inspection Schedules," October 2005, for Category "E"1 welds. The N-9A nozzle WOL was originally installed in September 1984 to repair detected flaws discovered in the 304 stainless steel safe-end base material. The flaws (two) were located in the heat affected zone (HAZ) of the stainless steel safe end base material adjacent to the nozzle N-9A dissimilar metal weld (DMW). The WOL was designed to provide full structural reinforcement of the flawed material assuming a postulated 360° through-wall crack while maintaining ASME Code safety margins. The WOL was installed with Alloy 82 (ERNiCr-3) weld metal.

The UT examination procedure and personnel were qualified in accordance with ASME Code, Section XI, Appendix VIII, Supplement 11 as implemented by the Performance Demonstration Initiative (PDI). However, prior to performing the UT examination, PNPS determined that the subject WOL could not be appropriately examined due to its present configuration. The ISI weld number for the subject WOL is RPV-N9A-1.

Entergy has initiated this request to propose an alternative to the ASME Code, Section XI. PNPS intends to use Code Cases N-504-3 and N-638-1 to modify the existing WOL of the Jet Pump Instrumentation Nozzle N-9A (ISI Weld RPV-9A-1). The modification will be performed using Alloy 52M (ERNiCrFe-7A) filler metal to facilitate performance of the required ASME Code, Section XI, Appendix VIII, Supplement 11 UT examination.

PNPS performs repair/replacement activities in accordance with the 1998 Edition/2000 Addenda of ASME Code, Section XI. This Edition of ASME Code, Section XI does not include requirements for application of full structural WOLs on DMWs and non-austenitic stainless steels. Moreover, requirements for installing full structural WOLs on DMWs and non-austenitic stainless steels are not presently included in any edition/addenda of ASME Code, Section XI (including Code Cases) approved by the NRC. However, the NRC has conditionally approved Code Case N-504-3 in RG 1.147 for installation of WOLs on austenitic stainless steel materials.

3.2 ASME Code Component Affected

ISI Weld RPV-N9A-1 Jet Pump Instrumentation Nozzle "N-9A"

3.3 ASME Code Requirements

ASME Code, Section XI, Subparagraph IWA-4421(a) and Subsubarticle IWA-4520 require that repair/replacement activities be performed and examined in accordance with the Owner's Requirements and the original Construction Code of the component or system. Alternatively, IWA-4421(b) and (c) allow use of later editions/addenda of the Construction Code (or a later different Construction Code such as ASME Code, Section III) and revised Owner Requirements. IWA-4430 and IWA-4600(b) provide alternative welding methods such as temper bead welding when the requirements of Paragraph IWA-4421 cannot be met. IWA-4520 requires that welds and weld repairs be performed in accordance with the Construction Code identified in the Repair/Replacement Plan. IWA-4530(a) requires the performance of pre-service examinations based on Subarticle IWB-2200 for Class 1 components. Table IWB-2500 prescribes ISI requirements for Class 1 butt welds in piping.

As an alternative to the above, ASME Code, Section XI Code Cases N-504-3 and N-638-1 specify requirements for performing the following:

Code Case N-504-3 provides alternative requirements to reduce a defect to a flaw of acceptable size in austenitic stainless steel materials by deposition of a structural WOL on the outside surface of the pipe or component. The NRC has conditionally approved this code case in RG 1.147 with the following condition: "The provisions of [ASME Code,] Section XI, Nonmandatory Appendix Q, Weld Overlay Repair of Class 1, 2, and 3 Austenitic Stainless Steel Piping Weldments, must be met."

Code Case N-638-1 establishes requirements for performing ambient temperature temper bead welding as an alternative to the preheat and post-weld heat treat (PWHT) requirements of the Construction Code. The NRC has conditionally approved this code case in RG 1.147 with the following condition: "UT volumetric examinations shall be performed with personnel and procedures qualified for the repaired volume and qualified by demonstration using representative samples which contain construction type flaws. The acceptance criteria of NB-5330 in the 1998 Edition through 2000 Addenda of [ASME Code,] Section III apply to all flaws identified within the repaired volume."

ASME Code, Section XI, Appendix VIII, Supplement 11 specifies performance demonstration requirements for ultrasonic examination of weld overlays.

3.4 Duration of the Alternative

The repair performed using this relief request is applicable to the fourth 10-Year ISI interval for PNPS which began July 1, 2005, and will end June 30, 2015. The licensee implemented the request during the unit's spring 2009 refueling outage (RFO-17).

3.5 Licensee's Proposed Alternatives for ASME Code Case N-504-3

3.5.1 Code Case N-504-3 and ASME Code, Section XI Appendix Q apply strictly to austenitic stainless steel piping and weldments. As an alternative, Entergy proposes to use Code

Cases N-504-3 and ASME Code, Section XI Appendix Q to perform WOL welding on SA-508, Class 2 low alloy steel, Alloy 82 welds, and austenitic stainless steel using Alloy 52M (ERNiCrFe7A) filler metals.

3.5.2 Code Case N-504-3, paragraph (b) and ASME Code, Section XI Appendix Q, Subparagraph Q-2000(a) require that weld metal used to fabricate WOLs be low carbon steel (0.035%) austenitic stainless steel. As an alternative, Entergy proposes to perform WOL welding using Alloy 52M (ERNiCrFe-7A).

3.5.3 Code Case N-504-3, paragraph (e) and ASME Code, Section XI Appendix Q, Subparagraph Q-2000(d) require that as-deposited austenitic weld metal used to fabricate WOLs have a delta ferrite content of at least 7.5 FN or 5 FN under certain conditions. As an alternative, Entergy proposes to perform WOL welding using Alloy 52M (ERNiCrFe-7A) which is purely austenitic. Therefore, this delta ferrite requirement does not apply.

3.5.4 Code Case N-504-3, paragraph (f)(1) and ASME Code, Section XI Appendix Q, Subparagraph Q-3000(b)(2) require that the end transition slope of the WOL "not exceed 45°". As an alternative, Entergy proposes to allow the end transition slope to exceed 45° provided the following two conditions are met: (1.) a physical restriction along the Jet Pump Instrument Penetration Seal Assembly prevents the WOL end transition slope from being 45° or less and (2.) the as-built configuration of the WOL is analyzed by Finite Element Analysis to demonstrate compliance with the applicable stress limits of the Construction Code.

3.5.5 Code Case N-504-3, paragraph (h) requires that a system hydrostatic test be performed in accordance with IWA-5000. As an alternative, Entergy proposes to perform a system leakage test in accordance with IWA-5000.

3.6 <u>Licensee's Basis for Alternatives to Code Case N-504-3</u>

Paragraphs 3.5.1, 3.5.2, and 3.5.3 above all relate to the same topic, i.e., application of Code Case N-504-3 and ASME Code, Section XI Appendix Q to SA508, Class 2 low alloy steel, Alloy 82 welds, and austenitic stainless steel using Alloy 52M (ERNiCrFe-7A) filler metals instead of strictly austenitic stainless steel piping and weldments. Therefore, the NRC staff has combined the bases for these three items below.

3.6.1 These proposals are acceptable because the WOL design, fabrication, examination, and preservice/inservice inspection requirements of Code Case N-504-3 and ASME Code, Section XI Appendix Q may also be applied to nickel alloy WOLs of non-austenitic steels such as low alloy steels and nickel alloys. While some material requirements in Code Case N-504-3 and ASME Code, Section XI Appendix Q may only apply to austenitic stainless steels, Entergy has identified these requirements and proposed alternatives to appropriately address them.

3.6.2 The requirement to use low carbon steel (0.035%) austenitic stainless-steel was included in Code Case N-504-3 and ASME Code, Section XI Appendix Q to reduce the sensitization potential of the austenitic stainless steel WOL, thereby reducing its susceptibility to intergranular stress-corrosion cracking (IGSCC). As an alternative, Entergy has proposed to perform WOL welding using Alloy 52M (ERNiCrFe-7A) weld metal. While carbon content is not a critical factor in assessing resistance of nickel alloys

to IGSCC, the chromium content is. This point has been clearly documented in Section 2.2 of Electric Power Research Institute (EPRI) Technical Report MRP-115. "The only well explored effect of the compositional differences among the weld alloys on IGSCC is the influence of chromium. Business, et al. evaluated the IGSCC resistance of nickel-based weld metals with various chromium contents ranging from about 15% to 30% chromium. Testing was performed in doped steam and primary water. Alloy 182, with about 14.5% chromium, was the most susceptible. Alloy 82 with 18-20% chromium took three or four times longer to crack. For chromium contents between 21 and 22%, no stress corrosion crack initiation was observed..." To conclude, Alloy 52M weld metal has high chromium content (28 - 31.5%); therefore, it has excellent resistance to IGSCC.

3.6.3 The requirement to have a delta ferrite content of at least 7.5 FN was included in Code Case N-504-3 and ASME Code, Section XI Appendix Q to reduce the sensitization potential of the austenitic stainless steel WOL, thereby reducing its susceptibility to IGSCC. As an alternative, Entergy has proposed to perform WOL welding using Alloy 52M (ERNiCrFe-7A) weld metal which has a purely austenitic microstructure. Therefore, the requirement to measure delta ferrite does not apply in this application. The susceptibility of nickel alloys to IGSCC is dependant on its chromium content as explained above. Furthermore, the chromium content of the first layer of Alloy 52M weld metal could be reduced due to dilution with the underlying base and weld materials. Because this is the case, Entergy has self-imposed the following restriction on the first layer of the WOL: "The first layer of Alloy 52M weld metal deposited may not be credited toward the required thickness. Alternatively, a diluted layer may be credited toward the required thickness, provided the portion of the layer over the austenitic base material, austenitic weld, and the associated dilution zone from an adjacent ferritic base material contains at least 20% chromium. The chromium content of the deposited weld metal may be determined by chemical analysis of the production weld or from a representative coupon taken from a mockup prepared in accordance with the [welding procedure specification] WPS (or a representative WPS) for the production weld."

3.6.4 Code Case N-504-3, paragraph (f)(1) and ASME Code, Section XI Appendix Q, Subparagraph Q-3000(b)(2) require that the end transition slope of the WOL "not exceed 45°." It is Entergy's intent to comply with this requirement. However, the close proximity of the WOL to the instrument lines of the Jet Pump Instrument Penetration Seal Assembly limits Entergy's ability to lengthen the WOL along the penetration seal assembly. This interference could necessitate the design and installation of an end transition slope that exceeds 45°. Should this condition exist, Entergy will analyze the as-built configuration of the WOL using Finite Element Analysis to demonstrate compliance with the applicable stress limits of the Construction Code or ASME Code, Section III.

3.6.5 Code Case N-504-3, paragraph (h) requires that a system hydrostatic test be performed in accordance with IWA-5000 when a flaw penetrates the full thickness of the pressure boundary. For non-through-wall flaw conditions, Code Case N-504-3 allows performance of a system leakage test. Pressure testing is not addressed by ASME Code, Section XI Appendix Q. As an alternative, Entergy proposes to perform a system leakage test in accordance with IWA-5000. This proposal is consistent with the pressure testing requirements of IWA-4540 and Code Case N-416-3, except that the NDE requirements of IWA-4540 and Code Case N-416-3 would not apply to a WOL. The WOL acceptance examination will include both liquid penetrant and UT examinations. Liquid penetrant examinations will be performed in accordance with ASME Code, Section III while the UT

examination will be performed in accordance with ASME Code, Section XI Appendix VIII, Supplement 11 as implemented by PDI. The UT acceptance standards are as specified in Tables IWB-3514-2 and 3.

3.7 Staff Evaluation of Alternatives to Code Case N-504-3

Under the rules of ASME Code, Section XI, IWA-4421, repairs shall be performed in accordance with the Owner's Requirements and the original Construction Code. Later editions and addenda of the Construction Code or of ASME Code, Section III, either in their entirety or portions thereof, and ASME Code Cases may be used. Code Case N-504-3, as modified by the identified alternatives, will be used by the licensee for installation of a weld overlay on the RPV-N9A-1 Jet Pump Instrumentation Nozzle Weld. Code Case N–504–3 was conditionally approved by the NRC staff for use under RG 1.147, Revision 15. Therefore, the use of Code Case N-504-3 as an alternative to the mandatory ASME Code repair provisions is acceptable to the NRC staff, provided that all conditions and provisions specified in RG 1.147, Revision 15 are complied with.

The requests for alternative shown in paragraphs 3.5.1, 3.5.2, and 3.5.3 above all relate to the same topic, i.e., application of Code Case N-504-3 and ASME Code, Section XI, Appendix Q to SA508, Class 2 low alloy steel, Alloy 82 welds, and austenitic stainless steel using Alloy 52M (ERNiCrFe-7A) filler metals instead of strictly austenitic stainless steel piping and weldments. Therefore, the NRC staff has combined the bases for these three items below.

The licensee's proposed implementation of ASME Code, Section XI, Appendix Q for the ISI and subsequent additional examinations of the WOL is acceptable since RG 1.147, Revision 15 requires this condition to be met when using ASME Code Case N-504-3. ASME Code, Section XI, Appendix Q, provides an alternative to the requirements of IWA-4420, IWA-4520, IWA-4530, and IWA-4600 for making repairs to, and the examination of, Class 1, 2, and 3 austenitic stainless steel pipe weldments by deposition of a weld overlay on the outside surface of the pipe.

3.7.1, 3.7.2 & 3.7.3

The first and second proposed modifications to the Code Case N-504-3 and ASME Code, Section XI, Appendix Q, provisions involve the use of a nickel-based alloy weld material rather than austenitic stainless steel. The licensee stated that Paragraph (b) of Code Case N-504-3 requires that the reinforcement weld material shall be low carbon (0.035% maximum) austenitic stainless steel and ASME Code, Section XI, Appendix Q is for Weld Overlay Repair of Class 1, 2, and 3 Austenitic Stainless Steel Piping Weldments. In lieu of the stainless steel weld material, Alloy 52M, a consumable welding wire, which is highly resistant to stress-corrosion cracking (SCC), was proposed for the overlay weld material. The NRC staff notes that the use of Alloy 52M material is consistent with weld materials used to perform similar WOLs at other operating boiling-water reactor (BWR) facilities. The NRC staff also notes that the licensee is performing the subject WOL on dissimilar metal welds made of Alloy 82/182 material. For material compatibility in welding, the NRC staff considers that Alloy 52M is a better choice of filler material than austenitic stainless steel material for this weld joint configuration. Alloy 52M contains about 30% chromium which would provide excellent resistance to SCC if exposed to the reactor coolant environment. This material is identified as F-No. 43 filler metal and has been previously approved by the NRC staff for similar applications. Therefore, the licensee's proposed use of Alloy 52M for the WOL as a modification to the requirements of Code Case N-504-3, Paragraph (b) and ASME Code, Section XI, Appendix Q is acceptable as it will provide an acceptable level of quality and safety.

The third proposed modification is to Code Case N-504-3 Paragraph (e) and ASME Code, Section XI, Appendix Q which require as-deposited delta ferrite measurements of at least 7.5 FN for the weld reinforcement. The licensee proposed that delta ferrite measurements will not be performed for this overlay because the deposited Alloy 52M material is 100% austenitic and contains no delta ferrite due to the high nickel composition (approximately 60% nickel). Code Case N-504-3 and ASME Code, Section XI, Appendix Q are designed for WOL repair of austenitic stainless steel piping. Therefore, the material requirements regarding the delta ferrite content of at least 7.5 FN, as delineated in Code Case N-504-3, Paragraph (e), and ASME Code, Section XI, Appendix Q apply only to an austenitic stainless steel WOL material to ensure its resistance to SCC. These requirements are not applicable to Alloy 52M, a nickel-based material which would be used for the WOL. Therefore, the NRC staff finds that the requested alternative will provide an acceptable level of quality and safety.

3.7.4 The fourth proposed modification is to Code Case N-504-3, paragraph (f)(1) and ASME Code, Section XI, Appendix Q, Subparagraph Q-3000(b)(2) which require that the end transition slope of the WOL "not exceed 45°." The licensee intends to comply with this requirement. However, the primary purpose of this weld overlay is to make the weld configuration able to be UT inspected, but due to the geometry of the configuration of the weldment and interferences from other equipment the licensee may not be able to comply with this requirement. The licensee will demonstrate compliance with the applicable stress limits of the Construction Code or ASME Code, Section III on this weld configuration. Therefore, since the weld configuration will meet the applicable stress limits of the original Construction Code or ASME Code, Section III, the NRC staff finds that the requested alternative will provide an acceptable level of quality and safety

3.7.5 The licensee's proposed modification to Paragraph (h) of Code Case N-504-3 is to perform leak testing in accordance with ASME Code, Section XI, IWA-5000. Use of a leak test at normal operating temperature and pressure in lieu of a hydrostatic test has been incorporated in ASME Code, Section XI beginning in the 1998 Edition with the 1999 Addenda. PNPS is currently in its fourth 10-year ISI interval and the ISI Code of Record for the fourth 10-year ISI interval is the 1998 Edition with 2000 Addenda of the ASME Code, Section XI. As the licensee's alternative is consistent with the current practice, the NRC staff accepts the licensee's basis for this alternative.

3.8 Licensee's Proposed Alternatives to Code Case N-638-1

3.8.1 ASME Code Case N-638-1, Paragraph 1.0(a) limits the maximum area of an individual weld to 100 square inches. As an alternative, Entergy proposes to limit the surface area on the ferritic base material to 500 square inches.

3.8.2 ASME Code Code Case N-638-1, paragraph 2.1(j) specifies that the "average values of the three HAZ [heat affected zone] impact tests shall be equal to or greater than the average values of the three unaffected base metal tests." This requirement applies to acceptance criteria for Charpy V-notch HAZ tests of the welding procedure qualification test coupon. As an alternative, Entergy proposes to use the following acceptance criteria: "The average lateral expansion value of the three HAZ impact test specimens shall be equal to or greater than the average lateral expansion value of the three unaffected base metal test specimens."

3.8.3 Code Case N-638-1, paragraph 3.0(c) requires the deposition and removal of at least one weld reinforcement layer for "similar materials" (i.e., ferritic materials). As an alternative, Entergy proposes to exclude this requirement because it does not apply to austenitic weld filler metals.

3.8.4 Code Case N-638-1, Section 3.0 does not specifically address verification or monitoring of welding preheat and interpass temperatures. As an alternative, Entergy proposes the following: "Preheat and interpass temperatures will be measured using a contact pyrometer. In the first three layers, the interpass temperature will be measured every three to five passes. After the first three layers, interpass temperature measurements will be taken every six to ten passes for the subsequent layers. Contact pyrometers will be calibrated in accordance with approved calibration and control program documents."

3.8.5 Code Case N-638-1, paragraph 4.0(b) requires that the final weld surface and the "band" around the final weld surface be examined using surface examinations and UT methods. The "band" referred to in this requirement is defined in paragraph 1.0(d) of N-638-1 as a dimension equal to "1-1/2 times the component thickness or 5 inches, whichever is less". As an alternative, Entergy proposes the following: (1.) the WOL and adjacent base material that is within 1/2" of the WOL (on each side) shall be examined by the liquid penetrant method and (2.) the WOL examination volume A-B-C-D in Figure Q-4100-1 of ASME Code, Section XI, Appendix Q shall be UT examined.

3.8.6 Code Case N-638-1, paragraph 4.0(b) specifies that surface and volumetric examinations cannot be performed until the completed weld (i.e., WOL) "has been at ambient temperature for at least 48 hours." As an alternative, Entergy proposes that the surface and ultrasonic examinations cannot be performed until at least 48 hours after completion of the third temper bead layer of the WOL.

3.8.7 Code Case N-638-1, paragraphs 4.0(b) and (e) state that the UT examination shall be performed in accordance with Appendix I of ASME Code, Section XI and meet the acceptance criteria of IWB-3000. Regarding this UT examination, RG 1.147 includes the following condition: "UT volumetric examinations shall be performed with personnel and procedures qualified for the repaired volume and qualified by demonstration using representative samples which contain construction type flaws. The acceptance criteria of NB-5330 in the 1998 Edition through 2000 Addenda of [ASME Code,] Section III apply to all flaws identified within the repaired volume. As an alternative, Entergy proposes to perform this UT acceptance examination in accordance with the requirements and acceptance criteria of ASME Code, Section XI Appendix Q, Section Q-4000.

3.9 <u>Licensee's Basis for Alternatives to Code Case N-638-1</u>

3.9.1 Code Case N-638-1, Paragraph 1.0(a) specifies that the maximum area of finished surface of the weld shall be limited to 100 square inches. As an alternative, the licensee states that the surface area will be limited to 500 square inches over the ferritic material. They state that Code Case N-638-3 has been approved by the ASME and that residual stress analyses performed in support of Code Case N-638-3 show that stresses for 100 square inch through 500 square inch surface area overlays are very similar. The licensee indicated that there is extensive field experience with temper bead weld overlays on ferritic material. Several overlays have been applied with low alloy steel coverage significantly greater than the 100 square inches. These overlays have been examined

with Performance Demonstration Initiative (PDI) qualified techniques, in some cases multiple times, and none have shown any signs of new cracking or growth of existing cracks.

3.9.2 Code Case N-638-1, paragraph 2.1(j) specifies that the "average values of the three HAZ impact tests shall be equal to or greater than the average values of the three unaffected base metal tests." As an alternative, Entergy proposes to use the following alternative acceptance criteria: "The average lateral expansion value of the three HAZ impact test specimens shall be equal to or greater than the average lateral expansion value of the three unaffected base metal test specimens." The acceptance criteria for Charpy V-notch HAZ testing in Code Case N-638-1 is misleading and inconsistent with the specified acceptance criteria in ASME Code, Section XI applicable to other Class 1 components, since it implies that all three parameters: lateral expansion, absorbed energy, and percent shear fracture must be equal to or exceed the base material values. Code Case N-638-2 corrected paragraph 2.1(j) to state that Charpy V-notch acceptance criteria is based on the "average lateral expansion values" rather than the average of all three values. This change clarified the intent of the code case and aligned its acceptance criteria with NB-4330 of ASME Code, Section III and IWA-4620 and IWA-4630 of ASME Code, Section XI.

3.9.3 Code Case N-638-1, paragraph 3.0(c) requires the deposition and removal of at least one weld reinforcement layer for "similar materials" (i.e., ferritic materials). As an alternative, Entergy proposes to exclude this requirement because it does not apply to austenitic weld materials. This requirement only applies when welding is performed using ferritic weld metal. When temper bead welding is performed with ferritic weld metal, each ferritic weld layer must be tempered by the heat supplied from a subsequent weld layer. Because the final layer of a completed weld or weld repair would be untempered, paragraph 3.0(c) requires the deposition and removal of an additional layer (weld reinforcement) to ensure that the final layer of the completed weld is tempered. Since only austenitic weld metal (i.e., Alloy 52M) will be used to fabricate the proposed WOL, deposition and removal of a weld reinforcement layer is not required.

3.9.4 Code Case N-638-1, Section 3.0 does not specifically address verification or monitoring of welding preheat or interpass temperatures. Therefore, Entergy has proposed the following controls: "The preheat and interpass temperatures will be measured using a contact pyrometer. In the first three layers, the interpass temperature will be measured every three to five passes. After the first three layers, interpass temperature measurements will be taken every, six to ten passes for the subsequent layers. Contact pyrometers will be calibrated in accordance with approved calibration and control program documents." The proposed preheat and interpass temperature controls are based on field experience with depositing WOLs. Interpass temperatures beyond the third layer have no impact on the metallurgical properties of the low alloy steel heat affected zone.

3.9.5 Code Case N-638-1, paragraph 4.0(b) requires that the final weld surface and the band around the weld area (1.5T or 5", whichever is less) shall be examined using surface examinations and UT methods. Entergy has proposed the following as an alternative: (1) the WOL and adjacent base material within ½" of the WOL shall be examined by the liquid penetrant method and (2) the WOL examination volume A-B-C-D in Figure Q-4100-1 of ASME Code, Section XI, Appendix Q shall be ultrasonically examined. The

requirement in Code Case N-638-1, paragraph 4.0(b) to nondestructively examine the entire 1.5T band was established to address hydrogen cracking concerns. While the code case requirement is conservative, the proposed alternative is more than capable of detecting hydrogen cracking in ferritic materials. First of all, if hydrogen cracking were to occur, it would occur in the HAZ of the ferritic base material either below or immediately adjacent to the WOL. Therefore, it is unnecessary to examine the entire 1.5T band. Hydrogen cracking is not a concern in austenitic materials. If it occurs in the ferritic base material below the WOL, it will be detected by the UT which will interrogate the entire WOL including the interface and HAZ beneath the WOL. If it occurs in the ferritic base material immediately adjacent to the WOL, it will be detected by the liquid penetrant examination which is performed at least 1/2 inch on each side of the WOL.

3.9.6 Code Case N-638-1, paragraph 4.0(b) specifies that surface and volumetric examinations cannot be performed until the completed weld (i.e. WOL) "has been at ambient temperature for at least 48 hours." As an alternative, Entergy proposes that surface examinations and UT cannot be performed until at least 48 hours after completion of the third temper bead layer of the WOL. The 48-hour hold is specified to allow sufficient time for hydrogen cracking to occur (if it is to occur) in the HAZ of ferritic materials prior to performing final Non-Destructive Examination (NDE). However, based on extensive research and industry experience, EPRI has provided a technical basis for starting the 48-hour hold after completing the third temper bead weld layer rather than waiting for the weld overlay to cool to ambient temperature (weld layers beyond the third layer are not designed to provide tempering to the ferritic HAZ when performing ambient temperature temper bead welding). EPRI has documented their technical basis in Technical Report 1013558, "Temper Bead Welding Applications - 48 Hour Hold Requirements for Ambient Temperature Temper Bead Welding." The technical data provided by EPRI in their report is based on testing performed on SA-508, Class 2 low alloy steels and other P-Number 3, Group 3 materials. This point is important because the PNPS N-9A nozzle was manufactured from SA-508, Class 2 steel. After evaluating the issues relevant to hydrogen cracking such as microstructure of susceptible materials, availability of hydrogen, applied stresses, temperature, and diffusivity and solubility of hydrogen in steels, EPRI concluded the following: "There appears to be no technical basis for waiting 48 hours after cooling to ambient temperature before beginning the NDE of the completed weld. There should be no hydrogen present, and even if it were present, the temper bead welded component should be very tolerant of the moisture." The report also notes that over 20 weld overlays and 100 repairs have been performed using temper bead techniques on low alloy steel components over the last 20 years. During this time, there has never been an indication of hydrogen cracking by the NDE performed after the 48-hour hold or by subsequent inservice inspection.

3.9.7 Code Case N-638-1, paragraphs 4.0(b) and (e) state that the UT shall be performed in accordance with Appendix I of ASME Code, Section XI and meet the acceptance criteria of IWB-3000. Regarding this UT examination, RG 1.147 includes the following condition: "UT volumetric examinations shall be performed with personnel and procedures qualified for the repaired volume and qualified by demonstration using representative samples which contain construction type flaws. The acceptance criteria of NB-5330 in the 1998 Edition through 2000 Addenda of [ASME Code,] Section III apply to all flaws identified within the repaired volume." As an alternative, Entergy has proposed to perform the UT acceptance examination in accordance with the requirements and acceptance criteria of ASME Code, Section XI, Appendix Q, Article Q-4000. The UT examination requirements

and acceptance standards in ASME Code, Section XI, Appendix Q, Article Q-4000 were developed specifically for WOLs unlike those in Code Case N-638-1. According to Article Q-4000, UT examination procedures and personnel are qualified in accordance with Appendix VIII of ASME Code, Section XI. Supplement 11 of Appendix VIII specifically addresses qualification requirements for WOLs. When UT examinations are performed in accordance with ASME Code, Section XI, Appendix VIII, Supplement 11 (as implemented through PDI), the examinations are considered more sensitive for detecting fabrication and service-induced flaws than traditional radiographic and ultrasonic examination methods. Furthermore, construction-type flaws have been included in the PDI qualification sample sets for evaluating procedures and personnel. ASME Code, Section XI, Appendix Q, Article Q-4100 also establishes UT acceptance standards for WOL examinations. Similar to NB-5330, the UT examination must assure adequate fusion with the base material and detect welding flaws such as interbead lack of fusion, inclusions, and cracks. Detected planar and laminar flaws are required to meet the acceptance standards of Tables IWB-3514-2 and IWB-3514-3, respectively. Paragraph Q-4100(c) also limits the reduction in coverage due to a laminar flaw to less than 10% while uninspectable volumes are assumed to contain the largest radial planar flaw that could exist within the volume. Therefore, the Article Q-4100 qualification requirements and acceptance standards are equivalent or more conservative than those specified in RG 1.147.

3.10 Staff Evaluation of Modifications to Code Case N-638-1

To eliminate the need for preheat and post-weld heat treatment under the Construction Code, the industry developed requirements for implementation of a temper bead welding technique which were published in Code Case N-638-1. The NRC endorsed Code Case N-638-1 in RG 1.147, Revision 15. The temper bead technique carefully controls heat input and bead placement which allows subsequent welding passes to stress relieve and temper the HAZ of the low alloy or carbon steel base material and preceding weld passes. The welding is performed with low hydrogen electrodes under a blanket of inert gas. The inert gas shields the molten metal from moisture and hydrogen. Therefore, the need for the preheat and post-weld heat treatment specified by the Construction Code is not necessary to produce a sound weld using a temper bead welding process which meets the requirements of Code Case N-638-1.

3.10.1 Code Case N-638-1, Paragraph 1.0(a) requires that the maximum area of an individual weld, based on the finished surface, will be limited to 100-square inches and the depth of the weld will not exceed one-half of the ferritic base metal thickness. This condition will not be met because the design for the weld overlay covers an area up to approximately 500-square inches on the ferritic component, which exceeds the limitations of Code Case N-638-1. EPRI Technical Report 1003616 provides technical justification for exceeding the size of the temper bead repairs up to a finished area of 500-square inches over the ferritic material. Results of industry analyses and testing performed to date have indicated that there is no direct correlation between the amount of surface area repaired and residual stresses generated using temper bead welding. Residual stresses associated with larger area repairs (>100 square inches) remain compressive at an acceptable level. Based on the preceding discussion, the NRC staff concludes that the modification to increase the weld overlay to as much as 500-square inches provides an acceptable level of quality and safety.

3.10.2 The licensee has adequately demonstrated that Paragraph 2.1(j) of Code Case N-638-1 clearly intended that the Charpy V-notch test acceptance criteria in Code Case N-638-1 be based on the average lateral expansion value rather than the average of all three values (lateral expansion, absorbed energy, and percent shear fracture). They have shown that all of the governing documents, i.e., ASME Code, Section III, NB-4330, "Impact Test Requirements," ASME Code, Section XI, IWA-4620, "Temperbead Welding of Similar Materials," and ASME Code, Section XI, IWA-4630, "Temperbead Welding of Dissimilar Materials" and Code Case N-638-2 all use the average lateral expansion value criterion. Therefore, the licensee's proposed alternative to use the average lateral expansion value criterion for Charpy V-notch test acceptance criteria provides an acceptable level of quality and safety.

3.10.3 Code Case N-638-1, Paragraph 3.0(c) requires the deposition and removal of at least one weld reinforcement layer for "similar materials" (i.e., ferritic materials). Since this weld is a dissimilar metal weld with an austenitic filler metal (i.e., Alloy 52M) for the proposed weld overlays, depositing and removing a weld reinforcement layer is not required.

3.10.4 Code Case N-638-1, Paragraph 4.0(c) specifies that the area from which weld-attached thermocouples have been removed shall be ground and examined using a surface examination method. The licensee states that thermocouples will not be used. Instead, preheat and interpass temperatures will be monitored by contact pyrometers. These temperature sensing devices will be used to verify preheat temperature and interpass temperature every three to five passes in the first three layers. After the first three layers, interpass temperature measurements will be taken every six to ten passes for the subsequent layers. Contact pyrometers will be calibrated in accordance with approved calibration and control program documents. The NRC staff agrees that this method of temperature measurement acceptable for the measurement of preheat and interpass temperature in the temperature range of 50 °F to 350 °F. Therefore, the NRC staff concludes that this type of monitoring of the interpass temperature provides an acceptable level of quality and safety.

3.10.5 The NRC staff agrees with the licensee that the proposed alternative to use liquid penetrant examination of the WOL and adjacent base metal within 1/2" of the WOL can detect cracking, since if cracking were to occur, it would occur either in or immediately adjacent to the WOL. Therefore, it is unnecessary to examine the entire 1.5T band. If it occurs in the ferritic base material below the WOL, it will be detected by UT which will interrogate the entire WOL including the interface and HAZ beneath the WOL. If it occurs in the ferritic base material immediately adjacent to the WOL, it will be detected by the liquid penetrant examination which is performed at least 1/2 inch on each side of the WOL.

For the UT, the NRC staff notes that the proposed requirement is consistent with Subarticle Q-4300 of the ASME Code, Section XI, Appendix Q and the NRC staff's position. The NRC staff finds these proposals acceptable.

3.10.6 Code Case N-638-1, Paragraph 4.0(b) specifies that the final weld surface shall be examined using surface and UT methods no sooner than 48 hours after the weld reaches ambient temperature. The 48-hour hold is to assure adequate hydrogen removal to avoid hydrogen cracking. Hydrogen cracking is a form of cold cracking. It is produced by internal tensile stresses produced from a localized build up of monatomic hydrogen. Monatomic hydrogen can form when moisture or hydrocarbons interact with the welding

arc and molten weld pool. The monatomic hydrogen can be entrapped during weld solidification and tends to migrate to transformation boundaries or other microstructure defect locations. As concentrations build, the monatomic hydrogen will recombine to form molecular hydrogen, thus generating localized internal stresses at these internal defect locations. If these stresses exceed the fracture toughness of the material, hydrogen-induced cracking will occur. This form of cracking requires the presence of hydrogen and low toughness materials. It is manifested by intergranular cracking of susceptible materials and can occur within 48 hours of welding. EPRI Technical Report 1013558, *Temper bead Welding Applications - 48 Hour Hold Requirement for Ambient Temperature Temper bead Welding,* has shown that it is not necessary to wait until ambient temperature is reached before initiating the 48-hour hold in order to assure adequate hydrogen removal. No further tempering or potential hydrogen absorption effects will occur after deposition of the third overlay layer. Therefore, the licensee's proposed alternative to perform the surface and UT examinations no sooner than 48 hours after the third layer of the weld overlay is installed provides an acceptable level of quality and safety.

3.10.7 The NRC staff agrees with the licensee that the proposed alternative to perform the UT acceptance examination in accordance with the requirements and acceptance criteria of ASME Code, Section XI, Appendix Q, Article Q-4000 is acceptable, since the UT examination requirements and acceptance standards in ASME Code, Section XI, Appendix Q, Article Q-4000 were developed specifically for WOLs. ASME Code, Section XI, Appendix Q is also a condition for acceptance of Code Case N-504-3 in RG 1.147. According to Article Q-4000, UT examination procedures and personnel are qualified in accordance with Appendix VIII of ASME Code, Section XI. Supplement 11 of Appendix VIII specifically addresses qualification requirements for austenitic WOLs. Therefore, the proposed alternative to perform the UT acceptance examination in accordance with the requirements and acceptance criteria of ASME Code, Section XI, Appendix Q, Article Q-4000, provides an acceptable level of quality and safety.

4.0 CONCLUSION

The NRC staff concludes that the alternatives proposed in PNPS Relief Request (PRR)-19 to perform a WOL on the RPV-N9A-1 Jet Pump Instrumentation Nozzle dissimilar metal weld will provide an acceptable level of quality and safety. Therefore, pursuant to 10 CFR 50.55a(a)(3)(i), the NRC staff authorizes PNPS Relief Request (PRR)-19 for the installation of a WOL on the RPV-N9A-1 Jet Pump Instrumentation Nozzle dissimilar metal weld. This relief request is authorized for use during spring 2009 refueling outage (RFO-17) at PNPS. The repair performed using this relief request is applicable to the fourth 10-Year ISI interval for PNPS which began July 1, 2005, and will end June 30, 2015.

All other ASME Code, Section XI requirements for which relief was not specifically requested and approved in this relief request remain applicable, including third party review by the Authorized Nuclear Inservice Inspector.

Principal Contributor: Edward Andruszkiewicz

Date: September 11, 2009

September 11, 2009

Site Vice President
Entergy Nuclear Operations, Inc.
Pilgrim Nuclear Power Station
600 Rocky Hill Road
Plymouth, MA 02360-5508

SUBJECT: RELIEF REQUEST (PRR)-19, INSTALL A WELD OVERLAY ON JET PUMP INSTRUMENTATION NOZZLE WELD RPV-N9A-1 - PILGRIM NUCLEAR POWER STATION (TAC NO. ME1151)

Dear Sir or Madam:

By letter dated May 1, 2009 (Agencywide Document and Management System (ADAMS) Accession No. ML091270162), as supplemented by letter dated May 7, 2009 (ML091320656), Entergy Nuclear Operations, Inc. (the licensee) requested Nuclear Regulatory Commission (NRC) staff review and approval of Pilgrim Relief Request (PRR)-19 to the requirements of the American Society of Mechanical Engineers Boiler and Pressure Vessel Code (ASME Code), Section XI for the Pilgrim Nuclear Power Station (Pilgrim) to utilize ASME Code Cases N-638-1, "Similar and Dissimilar Metal Welding Using Ambient Temperature Machine GTAW Temper Bead Technique, Section XI, Division 1," and N-504-3, "Alternative Rules for Repair of Class 1, 2, and 3 Austenitic Stainless Steel Piping, Section XI, Division 1," as modified by the licensee. Pilgrim Relief Request (PRR)-19 would permit the installation of a weld overlay on the RPV-N9A-1 Jet Pump Instrumentation Nozzle Weld at Pilgrim. The results of the NRC staff's review are provided in the enclosed safety evaluation.

If you have any questions regarding this approval, please contact the Pilgrim Project Manager, James Kim, at 301-415-4125.

Sincerely,

/RA/

Nancy L. Salgado, Chief
Plant Licensing Branch 1-1
Division of Operating Reactor Licensing
Office of Nuclear Reactor Regulation

Docket No. 50-293

Enclosure:
As stated

cc w/encls: Distribution via ListServ

DISTRIBUTION:
PUBLIC D. Jackson, R1 RidsNrrDciCvib Resource RidsRgn1MailCenter
RidsNrrLASLittle RidsNrrPMJKim E. Andruszkiewicz, Nrr RidsNrrDorlDpr Resource
RidsNrrDorlLpl1-1 Resource RidsAcrsAcnw_MailCTR Resource

Accession No.: ML092370549 *See memo dated 8/13/2009

OFFICE	LPLI-1/PM	LPLI-1/LA	CVIB/BC	LPL1-1/BC
NAME	JKim	SLittle	MMitchell*	NSalgado
DATE	9/10/09	9/10/09 (Via e-mail)	8/13/2009	9/11/09

OFFICIAL RECORD COPY