ATTACHMENT (9)

TRANSNUCLEAR CALCULATION NO. 1095-35 –

NON-PROPRIETARY VERSION

Calvert Cliffs Nuclear Power Plant, LLC
March 9, 2011

NON-PROPRIETARY VERSION

TRANSNUCLEAR	Form 3.1-1 Calculation	Calc. No.: 1095-35
		Rev. No.: 2
Title: NUHOMS 32P- Transfer Cask Structural Analysis		Page: 1 of 21
		Project No.: 1095
		DCR No.: 10950-14

Project Name: NUHOMS 32P

Calculation Title: NUHOMS 32P- Transfer Cask Structural Analysis

Number of CDs attached: _____

If original issue, 10CFR72.48 review required?

☒ No (explain) ☐ Yes, SR No. _____

The NUHOMS 32P is not licensed. Calvert Cliffs (customer) will be performing 72.48's as part of their site specific license.

1. **This calculation is complete and ready for independent review**

   Originator's Signature Mark Chen Date: 4/14/04

2. **This calculation has been checked for consistency, completeness, and arithmetic correctness.**

   Checker Signature P. Shih Date: 4/14/04

3. **Calculation preparation and check complies with procedure - package is complete**

   PE's Signature J. Yage Date: 4/14/04

1 - Purpose

The purpose of this calculation is to evaluate the structural integrity of the CCNP onsite Transfer Cask to reflect the increase in the DSC capacity from 24 to 32 fuel elements. Revision 1 of this calculation was made to incorporate the comments in Reference 2. This revision (Rev. 2) is made to incorporate the request by Reference 3.

2 - References

1) Transnuclear PACTEC Calculation No. 10399-01, Rev.0, "NUHOMS 32P-ISFSI Transfer Cask Structural Analysis". This calculation is attached as Appendix 1 for easy reference. (Pages 5, 62, 63, 68-73, 117 and Sections 2.3, 3.4.2, 3.4.3, 3.4.4, 4.1.8 and Tables 5.2.1 & 5.2.2 have been changed in this calculation).

2) Transnuclear DCR No. 10950-8, Rev.0.

3) Transnuclear DCR No. 10950-14, Rev. 0

3 – Analysis Approach and Assumptions

See Reference 1, Section 3.0.

4 - Analysis and Results

See Reference 1, Sections 4.0 and 5.0, except page numbers 5, 24, 25, 62, 63, 68 to 73 which are presented in this calculation. It may be noted that the changes on page 5 of Reference 1 are of editorial nature. The changes in the remaining pages listed in this calculation are necessitated by the revised transfer cask trailer system in Appendix 1, reference 34 and by the request of Reference 3.

Also, Reference 1 Sections 2.3 (pg. 16), 3.4.2 (pg. 23), 4.1.8 (pgs. 57, 58) and 5.2 (Tables 5.2.1 & 5.2.2) have been revised to incorporate comments in reference 2. Section 3.4.3 and 3.4.4 have been revised to incorporate changes requested in Reference 3.

The revised pages of reference 1 are included in this calculation. It may be noted that reference numbers on these pages pertain to Appendix 1, Section 6.0 (with revised page 117).

5 - Conclusions

See Reference 1, Section 5.0.

Revised Page 5 of Appendix I

1.2 Investigation Approach

All Transfer Cask components will be analyzed for structural integrity. The maximum stress intensity of each component when subjected to normal operating, off-normal and accident loads, as defined by the licensing documents [4, 5, and 10], will be determined and compared to allowable ASME Section III stresses [9].

This calculation package addresses all the issues included in the previous calculation. However, in this package the updated component weights from NUHOMS 32P – Weight Calculations of DSC / TC System [35] and revised temperature distribution [36 & 37] will be used.

The Transfer Cask geometry will be per the Baltimore Gas and Electric construction drawings [6]. For Service Levels A, B, and C loads, elastic analysis will be utilized. For Service Level D loads, the components will be analyzed either elastically or plastically where necessary per the ASME Section III, Appendix F requirements [9].

Revised Page 62 of Appendix 1

2. DBT Wind Pressure Loads

a. Stability Analysis:

The geometry considered for the analysis is shown below.

[redacted]

Wt of the Cask	=	215.0^K	Section 2.3
Wt of the Skid	=	18.7^K	[34]
Wt of the Trailer	=	31.0^K	[34]
Total Weight	=	264.7^K	

Area of Cask	=	15.5' x 89"/12	=	115.0 ft^2	
Area of Skid	=	15.5' x 14.7/12	=	19.0 ft^2	
Area of Trailer	=	252/12 x 45.7/12	=	80.0 ft^2	[34]
		Total Area	=	214.0 ft^2	

$$q_z = 0.00256\, K_z (IV)^2$$

Where:

$V = 360$ mph
$I = 1.07$
$K_z = 0.8$

Revised Page 63 of Appendix 1

$$q_z = 0.00256\,(0.8)(1.07 \times 360)^2$$
$$= 303.9 \text{ psf} \quad < \quad 397 \text{ psf}$$

Overturning moment = 214.0 x 397/1000 x 74.7/12 = 528.9 K-ft [34]

Restoring moment = 264.7 x 72.0/12 = 1588.2 K-ft [34]

Factor of Safety against overturning = 1588.2/528.9 = 3.00

b. Stress Analysis

Cask Shell

Assume cask is simply supported and subjected to a uniform load P over entire length. Use case 9c, Table 31 of Roark & Young [22]

Total Force, $P = 397/1000 \times 15.5 \times 89''/12 = 45.64^K$
Distributed Wind Load, $p = 45.64^K/186'' = 0.245$ K/in

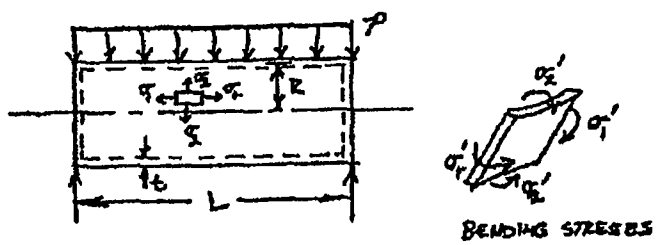

At top center,

$$\text{Max } \sigma_2 = -0.492\, B\, p\, R^{3/4} L^{-1/2} t^{-5/4}$$
$$\text{Max } \sigma_2' = -1.217\, B^{-1}\, p\, R^{1/4} L^{1/2} t^{-7/4}$$
$$\text{Max } \sigma_1 = -0.1188\, B^{3}\, p\, R^{1/4} L^{1/2} t^{-7/4}$$

Revised Page 68 of Appendix I

W_m= 3967lb [10]

W_{cst}= 264,700 lb.

M_m=3967/32.2 = 123.2 lb-m

V_i= 126 mph = 184.8 ft/sec

L = 45.7" +14.7" + 89" = 149.4" = 12.5 ft [34]

L_1= 45.7" + 14.7" +89/2 = 104.9" = 8.7 ft [34]

R = 6.0 ft

R_1 = 13.8 ft [34]

R_2 = 10.6 ft [34]

ϕ = 55.4° [34]

$\sin\phi = 0.823$

$\cos\phi = 0.568$

$(I_c)_o = (I_c)_g + M_c d_o^2$ where d_o is the same as R_2

$(I_c)_g = ½\, m_c R_c^2$

m_{cst} = 264,700 / 32.2 = 8,220.5 lb-m

R_c = cask radius

R_c = 44.5" = 3.71 ft

Therefore:

$(I_c)_g = ½\,(8{,}220.5)(3.71)^2 = 56{,}574$ ft^{2}lb-m

$m_{cst} d_o^2 = 8{,}220.5\,(10.6)^2 = 923{,}655$ ft^{2}lb-m

Revised Page 69 of Appendix 1

$(I_c)_o = 980{,}229\ ft^2 lb\text{-}m$

Substituting:

$$0.823\cos\theta + 0.568\sin\theta = \frac{13.8^2 x 184.8^2 x 123.2^2}{2(264{,}700)(10.6)[980{,}229 + 13.8^2(123.2)]} + 0.823$$

Simplifying:

$$0.823\cos\theta + 0.568\sin\theta = 0.0175 + 0.823 = 0.841$$

Solving:

$\theta = 1.9°$

This is the angle at which the cask stops rotating.

The minimum angle for tip-over of the cask occurs when the c. g. is directly above the point of rotation.

$\theta_{tip} = 90° - \phi = 90° - 55.4° = 34.6°$

Since θ_{tip} is greater than θ, tip-over of the cask will not occur.

b. Stress Analysis

Analysis is performed separately for the cask shell and the cover plates.

Cask Shell:

The impact force is calculated by determining the force to maintain the cask in equilibrium at the angle of rotation. This force is multiplied by a dynamic load factor of 2 to determine the statically applied force

Revised Page 70 of Appendix 1

$$W_{cat} R_2 \cos(\phi+\theta) = F_i' R_2 \sin(\phi+\theta)$$

$$\therefore \quad F_i' = W_{cat} \cot(\phi+\theta)$$

$$\phi+\theta = 55.4° + 1.9° = 57.3°$$

$$F_i' = 264.7 \cot(57.3) = 169.9\, Kips$$

$$F = 2 \text{ x } F_i' = 339.8\, Kips$$

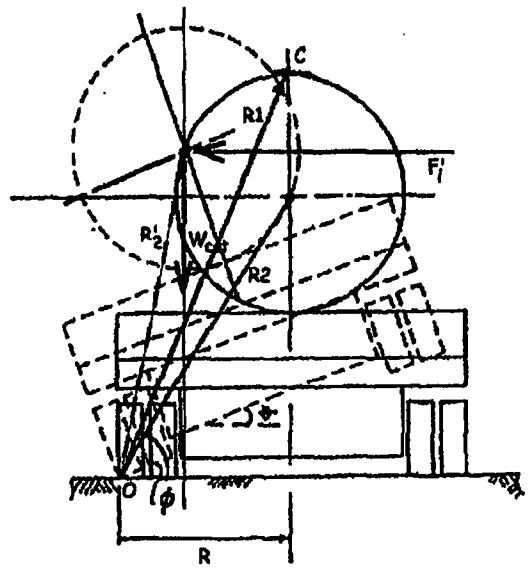

[In Appendix 1, this load was computed as F = 368.8 kips, use conservatively this higher load (F = 368.8 kips) for stress evaluation.]

To determine stresses on the cask shell due to this force, use a similar approach to that used for previous DBT wind pressure analysis.

$$p = \frac{P}{L} = \frac{368.6}{186} = 1.982 K/in$$

The ratio between p for the DBT and the TGM:

$$\text{RATIO} = \frac{1.982}{0.245} = 8.09$$

Ratio all stresses from DBT wind pressure analyses by 8.09.

$\sigma_2 = 0.113 \text{ x } 8.09 = 0.914$ Ksi
$\sigma_2' = 3.72 \text{ x } 8.09 = 30.09$ Ksi
$\sigma_2 + \sigma_2' = 31.00$ Ksi
$\sigma_1 = 1.20 \text{ x } 8.09 = 9.71$ Ksi

Revised Page 71 of Appendix 1

Primary Membrane S.I. = σ_1 = 9.71 Ksi

Membrane + Bending S.I. = $\sigma_2 + \sigma_2'$ = 31.0 Ksi

Cover Plates

It is to be expected if the missile hits the cover plates, tip-over will be bounded by the case where the missile hits the cask side. However, some sliding is likely to occur.

The force on the cover plates will be calculated based on the assumption that the cask/skid/trailer arrangement will slide.

Let V = velocity (in/sec)
m = mass (lb-m)
W = weight (lb-f)

Note: The subscripts "m" and "cst" refer to "missile" and "cask/skid/trailer" arrangement respectively.

Using conservation of momentum:

$m_m V_m = m_{cst} V_{cst}$
$V_{cst} = m_m V_m / W_{cst}$ = 3967 x 2218 / 264,700 = 33.2 in/sec

The sliding distance is determined by equation the kinetic energy to the work done during sliding.

KE = Work = F d
$\frac{1}{2} M_{cst} V_{cst}^2 = W_{cst}\ x$

where, x = sliding distance of the "cask/skid/trailer" arrangement

Solving for x:
$x = (1/2\ M_{cst} V_{cst}^2) / W_{cst}$

Revised Page 72 of Appendix 1

$= (1/2\ (W_{cst}/g)V_{cst}^2) / W_{cst}$
$= ½\ V_{cst}^2/g = ½\ (33.2)^2 / 386 = 1.43$ in.

Assuming constant acceleration of the "cask / skid / trailer" arrangement during sliding, the time for sliding can be calculated as:

$$T = 2\ x / V_{cst} = 2\ (1.43) / 33.2 = 0.0861 \text{ sec}$$

Acceleration, $\ddot{x}$, is given by

$$\ddot{x} = \frac{V_{cst}}{t} = \frac{33.2}{0.0861} = 385.6\ in/\sec^2\ ,\quad or\ 1g$$

The impact force, F_i, is the force needed to overcome both the frictional force, F_f, and the inertia forces.

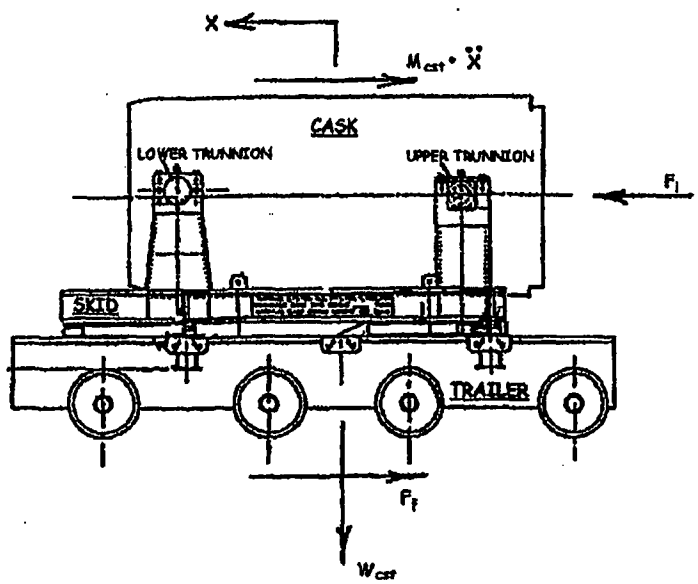

$$\sum F_x = 0 \quad \Rightarrow \quad F_i = F_f + M_{cst}\ddot{x}$$

Using the maximum possible value for the coefficient of friction, 1.0,

Revised Page 73 of Appendix 1

$$F_f = \mu W_{cst} = 264.7^K$$

Therefore, $F_1 = 264.7 + (264.7 / g)\, g = 529.4^K$

[Use Appendix 1, higher load ($F = 557^K$) conservatively for stress calculations]

Top Cover Plate, 3" thick.

Assume Plate is simply supported at edges
Assume force is uniformly distributed over entire plate surface since frontal area of the massive missile is assumed to be 20 sq. ft. and the 73.12"Ø plate area is 29.16 sq. ft.
Use case 10a, Table 24 of Roark & Young [22]

$$M_c = \frac{qa^2(3+\upsilon)}{16}$$

$$= \frac{P}{\pi a^2}\frac{a^2(3+\upsilon)}{16} = \frac{P(3+\upsilon)}{16\pi}$$

$$\sigma = \frac{6M}{t^2} = \frac{6P(3+\upsilon)}{16\pi t^2} = \frac{3}{8}\frac{557(3+0.3)}{\pi(3.0)^2} = 24.4 \text{ Ksi}$$

Inner Bottom Cover Plate, 2" thick.

Assume plate is fixed at edges
Assume force is uniformly distributed (See above)
Use case 10b, Table 24, Roark & Young [22]

$$M_c = \frac{qa^2(1+\upsilon)}{16}$$

$$\sigma = \frac{6M}{t^2} = \frac{6P}{\pi a^2}\frac{a^2(1.0+\upsilon)}{16t^2} = \frac{3}{8}\frac{P(1.0+\upsilon)}{\pi t^2} = \frac{3}{8}\frac{557(1.3)}{\pi(2.0)^2} = 21.6 \text{ Ksi}$$

Revised Page 117 of Appendix 1

31. Holman, J. P., "Heat Transfer", McGraw-Hill Book Company, Fourth Edition, 1976.

32. American Society of Metal, "ASM Handbook," Vol. 2, ASM, 1990.

33. Lambe & Whitman, "Soil Mechanics", John Wiley and Sons, 1969.

34. CCNPP Calculation No. CA04141, Rev.0001 and HOPPER Calculation No. HABGE-09/98-0669, Rev. 2, April 2001, "NUTECH Horizontal Module System (NUHOMS-24P), ISFSI Transfer Cask Structural Analysis".

35. TNY, Calculation No. 1095-1, "NUHOMS 32P – Weight Calculations of DSC / TC System, "Revision 1.

36. TN Calculation No. 1095-6, "NUHOMS 32P – Transfer Thermal Analysis, 103° F Ambient", Revision 0.

37. TN Calculation No. 1095-16, "NUHOMS 32P – Transfer Thermal Analysis, -3° F Ambient", Revision 0.

Revised Section 2.3 (Page 16) of Appendix 1

2.3 Main Component Weights

The following Main Component weights are based on the updated weight calculation [35].

Weight Summary

Item		
1	Cask without Head or Ram Access Cover Plate	116,021
2	Cask Head	5,290
3	DSC without Top Cover Plate/Basket /Fuel	22,842
4	DSC Top Cover Plate	1,214
5	Basket	20,520
6	Fuel	46,400
7	Water	12,176
8	Ram Access Plugs	570
9	Ram Access Cover Plate	147

	Exact Sum	Used in Calcs
Cask Lifting, Water and Loaded DSC (1+3+5+6+7+9)	218,106	220,000
Cask Lifting, Sealed DSC, Transport Mode (1+2+3+4+5+6+9)	212,434	215,000
Loaded DSC with Water (3+5+6+7)	101,938	104,000
Sealed DSC (3+4+5+6)	90,976	95,000
Cask Docked at HSM with Sealed DSC (1+2+3+4+5+6+8)	212,857	215,000
Basket and Fuel	66,920	68,400

Revised Section 3.4.2 (Page 23) of Appendix 1

3.4.2 Load Combinations

The Transfer Cask Load Combinations for normal, off-normal, emergency and accident loadings are listed in Table 3.1, taken from [34].

Table 3.1 – Transfer Cask Load Combinations

Load Case		Normal Operating Conditions					Off-Normal Conditions		Accident Conditions						
		1	2	3	4	5	1	2	1	2	3	4	5	6	7
Dead Load/Live Load		X	X	X	X	X	X	X	X	X	X	X	X	X	X
Thermal w/DSC	-3° to 103°F Ambient (1)	X	X	X	X	X	X	X	X	X	X	X	X	X	X
Handling Loads (Critical Lifts)	Vertical Tilted Horizontal	X	X	X											
Handling Loads (Non-Critical)	Transport DSC Transfer				X	X	X	X	X	X					
Seismic									X	X					
Tornado Wind Loads (2)											X				
Tornado Generated Missile (2)															X
Drop	Vertical (Top & Bottom) Corner Horizontal											X	X	X	
ASME Code Service Level		A	A	A	A	A	B	B	C	C	C	D	D	D	D
Load Combination No.		A1	A2	A3	A4	A5	B1	B2	C1	C2	C3	D1	D2	D3	D4

Notes:
1. Off-normal temperature based on Table 3.6-2 of USAR [4]
2. Load case is additional to Topical Report [10] requirements.

Revised Section 3.4.3 (Page 24 of 117) of Reference 1

3.4.3 Allowable Stress Criteria

The structural design criteria for the Transfer Cask is based on ASME Code Section III, Division I, Subsection NC, (Class 2) [9] as supplemented by Appendix F [9] and are given in Table 3.2 taken directly from [34].

Table 3.2 – Allowable Stress Criteria

Item	Stress Type	Stress Values(1)			
		Service Levels A & B	Service Level C	Service Level D	
				Elastic Analysis	Plastic Analysis
Transfer Cask(2) Structural Shell	General Membrane	S_m	1.2 S_m	Smaller of $2.4S_m$ or $0.7S_u$(4)	Greater of $0.7S_u$ or $S_y + 1/3(S_u - S_y)$(5)
	Local Mem + Bending	$1.5S_m$	1.8 S_m	150% of P_m Limit(5)	$0.9S_u$(5)
	Primary + Secondary	$3.0S_m$	N/A	N/A	N/A
Trunnions(7)	Membrane and Mem + Bending	Smaller of $S_y/6$ or $S_u/10$	N/A	N/A	N/A
	Shear	Smaller of 0.6 $S_y/6$ or 0.6 $S_u/10$	N/A	N/A	N/A
Fillet and Partial Penetration Welds(3)	Primary	$0.5S_m$	Greater of 0.65(6) S_m or $0.50S_y$	Smaller of $1.2S_m$ or $0.35S_u$	
	Primary + Secondary	$0.75S_m$	Smaller of $0.9S_m$ or $0.75S_y$	N/A	

Notes:

1. Values of S_y, S_m, and S_u versus temperature are given in Tables 2.2.1a -e of this package.
2. Includes full penetration welds.
3. Includes a nonvolumetric inspected weld efficiency factor of 0.5, ASME Section VIII, Div. 1, Table UW-12 No. 5 [Ref 36].
4. Local primary membrane stress, P_L, shall not exceed 150% of the P_m limit.
5. An alternative elastic analysis limit for $P_L + P_b$ is that the static or equivalent static loads shall not exceed 90% of the limit analysis collapse load using a yield stress which is the lesser of $2.3S_m$ and $0.7S_u$, or 100% of the plastic analysis or test collapse load; for plastic analysis, an alternative to the primary stress intensity limits is that the static or equivalent static loads shall not exceed 90% of the limit analysis collapse load using a yield stress which is the less of $2.3S_m$ and $0.7S_u$, or 100% of the plastic analysis or test collapse load.
6. For 0.5 efficiency factor, 0.6Sm is used for the allowable stress. However, it should be noted that even though an efficiency factor of 0.5 is applied for all nonvolumetric inspected welds, an efficiency factor higher than 0.5 is allowed for any individual welds installed by different methods. 0.65Sm is allowed for welds at Service Level C [Ref 1, Table 3.2-6].
7. Allowables of ANSI 14.6 for upper trunnion critical lifts. All other upper trunnion lifts and all lower trunnion lifts governed by the same ASME Code criteria applied to the cask structural shell.

Revised Section 3.4.4 (Page 25 of 117) of Reference 1

3.4.4 Applicable Documents

The Transfer Cask is designed to conform to the design and safety criteria outlined in the Topical Report NUH-002 [10], USAR [4], and SER [5] documents. The Cask design shall meet the limitsand requirements of the ASME Code [9] for Class 2 components. The Upper Lifting Trunnions will satisfy the criteria of ANSI-N14.6 for non-redundant trunnions.

Revised Section 4.1.8 (Page 57) of Appendix 1

1. Handling Condition:

Loading during critical lift – the inner bottom cover plate supports the weight of the DSC during the lift condition. The weight of the basket is to be carried by the cask inner bottom plate through the DSC bottom and may be represented by a uniform pressure on the inner bottom plate. The weights of the DSC shell and top are to be directly carried by the cask shell without any significant distribution of load on the cask inner bottom plate, since DSC shell is very close to the cask shell. The load is increased by 15% to account for motion loads.

Assume that the fuel and DSC base assembly load the cask base plate as a uniform pressure load:

Fuel weight = 46,400 lbs [35]

Basket Weight = 20,520 lbs [35]

Base weight, estimated:

Lead, assuming a 4.25" thickness
$= 0.411\ (4.25)\ (\pi/4)\ (67)^2 = 6{,}158$ lb

Steel, assuming a 2.5" thickness
$= 0.29\ (2.5)\ (\pi/4)\ (67)^2 = 2{,}556$ lb

8,714 lb

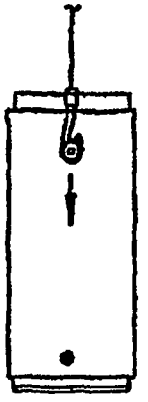

CASE 1: VERTICAL LIFT

Total Weight = 46,400 + 20520 + 8,714 = 75,634 lb

Total Load = 75,634 x 1.15 = 86,979 lb Say 87,000 lb

The uniform pressure applied is then:

Uniform pressure, $q = 87000\text{lb} / [\square\ (34^2 - 11.5^2)] = 27\ \text{lb/in}^2$

Case 2b of Table 24 in Roark [22] for a uniform pressure load on a plate with outer edge simply supported and inner edge guided:

$M_{max} = M_{rb} = K_m \times q \times a^2$

Revised Section 4.1.8 (Page 58) of Appendix 1

For b/a = 11.5" / 34" = 0.34

$K_m = 0.2$

$M_{max} = 0.2 \times 27 \times (34)^2 = 6{,}242$ lb-in/in = 6.2 kip-in/in

F = M/d = 6.2/2.0 = 3.1 K / in

Allowable Weld Stress = 9.35 ksi (page 58 of Appendix 1)

Therefore, Weld throat required = (3.1 K / in) / 9.35 ksi = 0.331 in

Actual Weld Size = 3/8 in.

Therefore, Weld Size is adequate.

Revised Section 5.2 (Page 110) of Appendix 1

5.2 Load Combination Results

The maximum stress combinations for ASME Service Levels A,B,C and D are added algebraically and shown in the tables below. The component stress intensities have the capability to withstand all the design loading combinations, in compliance with the requirements of ASME B + PV Code, Section III, Subsection NC.

Table 5.2.1 – Load Combinations Level A

Component	Stress Type	Load Combinations, Level A(ksi)		
		A1	A5	Allowable S.I.
		$DW + T + H_V$	$DW + T + H_T$	
Cask Structural Shell	P_M	1.27	6.18	21.7
	P_L	0.68	6.18	32.6
	P_L+P_B	0.68	30.50*	32.6
	P_L+P_B+Q	29.18	59.68	65.1
Cask Inner Liner	P_M	0.68	11.78	18.7
	P_L	0.68	11.78	28.1
	P_L+P_B	0.68	15.28	28.1
	P_L+P_B+Q	18.68	32.60	56.1
Top Flange	P_M	0.68	2.33	18.7
	P_L+P_B	1.02	8.02	28.1
	P_L+P_B+Q	19.02	26.02	56.1
Top 3" Cover Plate	P_M	0.52	0.52	18.7
	P_L+P_B	0.68	4.90	28.1
	P_L+P_B+Q	11.68	15.90	56.1
Bottom Support Ring	P_M	0.68	5.78	20.0 (@300°F) [36]
	P_L+P_B	1.02	29.60*	30.0 (@300°F) [36]
	P_L+P_B+Q	19.02	48.62	60.0 (@300°F) [36]
Bottom 2" Cover Plate	P_M	0.68	0.68	18.7
	P_L+P_B	11.16	10.48	28.1
	P_L+P_B+Q	26.16	25.48	56.1
Bottom ¾" Cover Plate	P_M	0.34	0.34	18.7
	P_L+P_B	0.68	0.68	28.1
	P_L+P_B+Q	21.68	21.68	56.1
Bottom 1" Cover Plate	P_M	0.34	0.34	18.7
	P_L+P_B	0.68	0.68	28.1
	P_L+P_B+Q	11.68	11.68	56.1
Ram Access Penetration Ring	P_M	0.52	0.52	18.7
	P_L+P_B	0.68	0.68	28.1
	P_L+P_B+Q	18.68	18.68	56.1

*Dead Weight Value from Table 5.1 not included because the transfer loads include a dead weight component.

Revised Section 5.2 (Page 111) of Appendix 1

Table 5.2.2 – Load Combinations Level B

Component	Stress Type	Load Combinations, Level B (ksi)	
		B2	Allowable S.I.
		$DW + T + H_T$	
Cask Structural Shell	P_M	6.18	21.7
	P_L	6.18	32.6
	P_L+P_B	30.50*	32.6
	P_L+P_B+Q	59.68	65.1
Cask Inner Liner	P_M	11.78	18.7
	P_L	11.78	28.1
	P_L+P_B	15.28	28.1
	P_L+P_B+Q	32.60	56.1
Top Flange	P_M	2.33	18.7
	P_L+P_B	8.02	28.1
	P_L+P_B+Q	26.02	56.1
Top 3" Cover Plate	P_M	0.52	18.7
	P_L+P_B	4.90	28.1
	P_L+P_B+Q	15.90	56.1
Bottom Support Ring	P_M	5.78	20.0 (@300°F) [36]
	P_L+P_B	29.60*	30.0 (@300°F) [36]
	P_L+P_B+Q	48.62	60.0 (@300°F) [36]
Bottom 2" Cover Plate	P_M	0.68	18.7
	P_L+P_B	10.48	28.1
	P_L+P_B+Q	25.48	56.1
Bottom ¾" Cover Plate	P_M	0.34	18.7
	P_L+P_B	0.68	28.1
	P_L+P_B+Q	21.68	56.1
Bottom 1" Cover Plate	P_M	0.34	18.7
	P_L+P_B	0.68	28.1
	P_L+P_B+Q	11.68	56.1
Ram Access Penetration Ring	P_M	0.52	18.7
	P_L+P_B	0.68	28.1
	P_L+P_B+Q	18.68	56.1

*Dead Weight Value from Table 5.1 not included because the transfer loads include a dead weight component.

Appendix 1

NUHOMS 32P ISFSI Transfer Cask Structural Analysis

PAC TEC Calculation No. 10399 - 01, Rev.0.

PacTec Packaging Technology, Inc. A Transnuclear, Inc. Company	**CALCULATION PACKAGE COVER SHEET**	File No: 10399 Calc. No: 10399-01 Page 1 of 117

PROJECT NAME:	CLIENT:
NUHOMS 32P	TNY

CALCULATION TITLE:

NUHOMS 32P ISFSI Transfer Cask Structural Analysis

PROBLEM STATEMENT OR OBJECTIVE OF THE CALCULATION:

The Transfer Cask structural analysis is revised in this calculation to reflect the increase in the DSC capacity from 24 to 32 fuel elements.

Document Revision	Affected Pages	Revision Description	Project Engineer Approval/Date	Name and Initials of Preparers & Checkers
0	ALL	Initial Release	J.G. Field 4/28/01	STEVE STRAUTHER PHIL NOSS PWN

Table of Contents

1.0 Introduction 4
1.1 Problem Statement 4
1.2 Investigation Approach 5
1.3 Results Summary 6
2.0 System Description 7
2.1 Main Components 7
2.2 Mechanical Properties of Materials 11
2.3 Main Component Weights 16
3.0 Analysis Approach 17
3.1 Assumptions and Requirements 17
3.2 Calculation Method 19
3.3 Analytical Idealization 21
3.4 Evaluation Conditions and Criteria 22
3.4.1 Loading Conditions 22
3.4.2 Load Combinations 23
3.4.3 Allowable Stress Criteria 24
3.4.4 Applicable Documents 25
4.0 Analysis 26
4.1 Transfer Cask Assembly Analysis 26
4.1.1 Dead Weight Stress Analysis 26
4.1.2 Thermal Stresses 28
4.1.3 Handling Stresses 34
4.1.4 Seismic Analysis 47
4.1.5 Vertical Drop Analysis 49
4.1.6 Horizontal Drop Analysis 51
4.1.7 Corner Drop Analysis 54
4.1.8 Weld Stresses 56
4.1.9 Tornado Stresses 60
4.1.10 Velocity Resulting in Massive Impact Load 79

4.2 Neutron Shield Analysis 81
4.3 Ram Access Ring Penetration Analysis 86
4.4 Trunnion Analysis 87
4.5 Cask Lid Lifting Bolts Analysis 101
4.6 Cask Head Bolt Analysis 102
4.7 Bottom Center Cover Plate Analysis 103
4.8 Miscellaneous Component Analysis 104
5.0 Conclusions 109
5.1 Stress Analysis Results 109
5.2 Load Combination Results 110
6.0 References 114

1.0 Introduction

1.1 Problem Statement

The NUHOMS-24P Transfer Cask (or Cask) is designed for temporary on site storage and transport of the Dry Shielded Canister (DSC) which contains radioactive Spent Fuel Assemblies (SFAs). The Cask is part of the Independent Spent Fuel Storage Installation (ISFSI) at the Baltimore Gas and Electric Calvert Cliffs Nuclear Power Plant. The Transfer Cask is intended for the transport of the DSC from the Fuel Pool to the Horizontal Storage Module (HSM).

Hopper and Associates was requested to review the complete set of NUHOMS design calculations, produced by others. The resulting Hopper and Associates report [1] led to Issue Reports numbered IR3-005-169 and 172 [2] for the Nutech calculation packages "Transfer Cask Structural Analysis" numbers DGE001.0202 and 0202A [7,8]. In addition, a revised weight calculation for the DSC/Transfer Cask system [13] was performed. As a result of these Issue Reports and the revised weight calculation, Hopper and Associates recommended that a new calculation package be generated to completely re-analyze the Transfer Cask structure and address the above concerns. In addition, the Rolling Velocity calculation package number BGE001.0223 [16] was replaced in order to update weights for the DSC/Transfer Cask system [13]. The Tornado calculation package number DUK003.0412 [3] was also replaced.

The resulting calculation package, CCNPP Calculation number CA04141 [34] provided a re-analysis in order to demonstrate the structural integrity of the Transfer Cask components for normal operating, off-normal and accident conditions. It also demonstrated compliance with safety criteria specified by the Nutech topical Report [10], Updated Safety Report [4], and the Safety Evaluation Report [5] using a combination of hand calculations and computer analysis. The calculation package supplements Nutech calculations BGE001.0202 and 0202A [7,8].

This calculation package is a revision of the above calculation to demonstrate capability of the Transfer Cask to carry the DSC with a payload of 32 fuel elements as compared to the previously analyzed 24 element payload.

1.2 Investigation Approach

All Transfer Cask components will be analyzed for structural integrity. The maximum stress intensity of each component when subjected to normal operating, off-normal and accident loads, as defined by the licensing documents [4,5, and 10], will be determined and compared to allowable ASME Section III stresses [9].

This calculation package addresses all the issues included in the previous calculation. However, in this package the updated component weights from NUHOMS 32P – Weight Calculations of DSC / TC System [35] will be used.

The Transfer Cask geometry will be per the Baltimore Gas and Electric construction drawings [6]. For Service Levels A, B, and C loads, elastic analysis will be utilized. For Service Level D loads, the components will be analyzed either elastically or plastically where necessary per the ASME Section III, Appendix F requirements [9].

1.3 Results Summary

The analyses of [34] have been repeated using the additional weight described in Section 1.2. The structural integrity of the Transfer Cask components is demonstrated for normal operating, off-normal and accident conditions. All of the Transfer Cask components meet the applicable ASME Code requirements and comply with the safety criteria specified by the licensing documents [4,5, and 10]. Stresses are summarized in Section 5.0, Conclusions.

2.0 System Description

2.1 Main Components

The main components of the Transfer Cask Assembly are shown below [6].

[redacted]

Transfer Cask Assembly – Elevation View

[redacted]

Transfer Cask – Bottom End & Lower Trunnion

[redacted]

Transfer Cask – Top End & Upper Trunnion

[redacted]

Grapple Transfer Plug Unit

2.2 Mechanical Properties of Materials

The mechanical properties of materials for the Transfer Cask are listed in the following Tables.

Table 2.2.1a – Mechanical Properties of Materials

Material	Temperature (°F)	Stress Properties (1) (ksi)			Elastic Modulus (1) (x1.0E3 ksi) (E)	Instantaneous Coefficient of Thermal Expansion (1) (μ in./in.-°F)
		Stress Intensity (S_m)	Yield Strength (S_y)	Ultimate Strength (S_u)		
Stainless Steel ASME SA240 Type 304 and SA479 Type 304	70	-	30.0	75.0	28.3	8.46
	100	20.0	30.0	75.0	-	8.63
	200	20.0	25.0	71.0	27.6	9.08
	300	20.0	22.5	66.0	27.0	9.46
	400	18.7	20.7	64.4	26.5	9.80
	500	17.5	19.4	63.5	25.8	10.10
	600	16.4	18.2	63.5	25.3	10.38
	800	15.2	16.8	62.7	24.1	10.79
Carbon (6) Steel ASTM A36	70	-	36.0	58.0	29.5	6.41
	100	14.5 (5)	36.0	-	-	6.53
	200	14.5 (5)	32.8	-	28.8	6.93
	300	14.5 (5)	31.9	-	28.3	7.30
	400	14.5 (5)	30.8	-	27.7	7.66
	500	14.5 (5)	29.1	-	27.3	8.03
	600	14.5 (5)	26.6	-	26.7	8.35

Notes: (applies to Tables 2.2.1a-e)

1. Steel data and thermal expansion coefficients were obtained from ASME Boiler and Pressure Vessel Code [14]. Note: Instantaneous thermal expansion coefficients are larger than average thermal expansion coefficients which is conservative.
2. Lead data was obtained from CRC Handbook of Tables for Applied Engineering Science, 2nd Edition, pp. 111 and 118 [15].
3. Data obtained from manufacturers published information [7].
4. Age hardened at 1150°F in accordance with note (5) of the ASME Code, Appendix I, Table I-1.4 [9].
5. Allowable stress values (S) for component supports [14].
6. Allowable stress values (S) and the yield strength (S_y) for A36 steel are given in Table I-12.1 and Table I-13.1, respectively, of the ASME Boiler and Pressure Code, Section III, Division 1, Appendix I [9].

Table 2.2.1b – Mechanical Properties of Materials

Material	Temperature (°F)	Stress Properties [1] (ksi)			Elastic Modulus [1] (x1.0E3 ksi) (E)	Instantaneous Coefficient of Thermal Expansion [1] (μ in./in. -°F)
		Stress Intensity (S_m)	Yield Strength (S_y)	Ultimate Strength (S_u)		
Carbon Steel Plate ASME SA516 Grade 70	70	23.3	38.0	70.0	29.5	5.42
	100	23.3	38.0	70.0	29.3	5.65
	200	23.1	34.6	70.0	28.8	6.39
	300	22.5	33.7	70.0	28.3	7.04
	400	21.7	32.6	70.0	27.7	7.60
	500	20.5	30.7	70.0	27.3	8.07
	600	18.7	28.1	70.0	26.7	8.46
Transfer Cask Lifting Trunnions SA-564 Gr. 630 PH [4]	70	45.0	105.0	135.0	28.3	5.89
	100	45.0	105.0	135.0	28.1	5.89
	200	45.0	97.1	135.0	27.6	5.90
	300	45.0	93.0	135.0	27.0	5.90
	400	43.8	89.8	131.4	26.5	5.91
	500	42.8	87.0	128.5	25.8	5.91
	600	42.1	87.7	126.7	25.3	5.96

Table 2.2.1c – Mechanical Properties of Materials

Material	Temperature (°F)	Stress Properties (1) (ksi)			Elastic Modulus (1) (x1.0E3 ksi) (E)	Instantaneous Coefficient of Thermal Expansion (1) (μ in./in. -°F)
		Stress Intensity (S_m)	Yield Strength (S_y)	Ultimate Strength (S_u)		
Transfer Cask Lifting Trunnion Sleeves SA182 F304N	70	23.3	35.0	80.0	28.3	8.46
	100	23.3	35.0	80.0	-	8.63
	200	23.3	28.7	80.0	27.6	9.08
	300	22.5	25.0	75.9	27.0	9.46
	400	20.3	22.5	73.2	26.5	9.80
	500	18.8	20.9	71.2	25.8	10.10
	600	17.8	19.8	69.7	25.3	10.38

Table 2.2.1d – Mechanical Properties of Materials

Material	Temperature (°F)	Allowable Stress Values for Class 2 Components (S) (1) (ksi)	Yield Strength (1) (ksi)
NUHOMS-24P Transfer Cask Bolting Materials ASME SA-193 Grade B7	-20	25.0	105.0
	+70	25.0	105.0
	+100	25.0	105.0
	+200	25.0	98.0
	+300	25.0	94.1
	+400	25.0	91.5
	+500	25.0	88.5
	+600	25.0	85.3

Table 2.2.1e – Mechanical Properties of Materials

Solid Neutron Shielding Material (3)	Poisson Ratio	Compressive Strength (ksi)	Modulus of Elasticity (1.0E3 ksi)
BISCo NS-3	0.2	3.9	0.16
Boro-Silicone ®	N/A	0.45	N/A

Material	Yield Strength (ksi)	Tensile Strength (ksi)	Modulus of Elasticity ($1x10^6$ psi)	Coefficient of Linear Expansion (μ in./in. -°F)	Approximate Melting Point (°F)
Common Lead (2) ASTM B29	---	2.5	2	16.4	621

2.3 Main Component Weights

The following Main Component weights are based on the updated weight calculation [35].

Weight Summary

Item		
1	Cask without Head or Ram Access Cover Plate	116,021
2	Cask Head	5,290
3	DSC without Top Cover Plate/Basket /Fuel	22,999
4	DSC Top Cover Plate	1,214
5	Basket	20,520
6	Fuel	46,400
7	Water	11,598
8	Ram Access Plugs	570
9	Ram Access Cover Plate	147

	Exact Sum	Used in Calcs
Cask Lifting, Water and Loaded DSC (1+3+5+6+7+9)	217,685 (218,171)	220,000
Cask Lifting, Sealed DSC, Transport Mode (1+2+3+4+5+6+9)	212,591	215,000
Loaded DSC with Water (3+5+6+7)	101,517 (102,203)	104,000
Sealed DSC (3+4+5+6)	91,133	95,000
Cask Docked at HSM with Sealed DSC (1+2+3+4+5+6+8)	213,014	215,000
Basket and Fuel (5+6)	66,920	68,400

3.0 Analysis Approach

3.1 Assumptions and Requirements

The following assumptions are taken:

1. Since the source of flooding is site specific, the flood condition is defined according to the location of the DSC during transfer and storage. The BGE ISFSI location is defined as a dry site [4]; therefore, no flood loads are defined for this site. Furthermore, due to its short term and infrequent use, the NUHOMS-24P transfer cask is not designed for operation during flood conditions, and plant procedures will ensure that the transfer cask is not used for DSC transfer during these conditions [10]. Thus, no flood analysis is required for the Transfer Cask.

2. Transfer Cask internal pressure will not be considered due to the pressure boundary provided by the DSC. [10]

3. Snow and ice loads for the Transfer Cask are negligible and thus are not considered since external surface temperature and circular section of Cask will preclude build-up of snow and ice when Cask is in use. [10]

4. The NUHOMS HSM and DSC (and therefore the Transfer Cask) contain no flammable material and the concrete and steel used for their fabrication could withstand any reasonable fire hazard. Loading due to and internal explosion is not considered since no explosive gases are present within the DSC.

5. The Cask Shell and End Plug temperatures are conservatively assumed constant to their junctions with the top, bottom and grapple rings. The temperatures are assumed to distribute linearly through the top, bottom and grapple rings.

6. The design temperature for the Neutron Shield is 400°F.

7. The Neutron Shield is assumed to be lost in the event of accident condition.

8. Buckling of the Neutron Shield Panel will not occur since the load due to external pressure will be transferred from the Neutron Shield Panel to the Structural Shell by the Solid Neutron Shield.

9. The Trunnions are designed for a temperature of 400°F. [30], [36]

10. ANSI N14.6 allowable stresses apply up to and including the weld of the Trunnion Sleeve to the Insert Plate of Cask Shell.

11. ASME allowable stresses apply for all Insert Plate and Cask Shell stresses.

12. All stresses obtained from the ANSYS analyses of the previous calculation [34] will be scaled up by an appropriate scale factor to account for the increased weight of the payload.

13. Thermal stresses obtained from the ANSYS analyses of the previous calculation [34] will not be scaled up due to the 32 element payload because the calculated temperatures do not vary significantly from those of the previous thermal analysis.

14. The hand calculations which follow will use the appropriate weights as defined in Section 2.3.

3.2 Calculation Method

A combination of computer models (using the computer program "ANSYS", [Ref. 11]) and hand calculations were used in [34] to evaluate the various Transfer Cask Components under normal operating, off-normal and accident conditions to demonstrate structural adequacy and stability.

1. The Transfer Cask will be analyzed for dead weight by applying a 1g acceleration in the vertical and horizontal directions. These dead weight stresses will be obtained by scaling the stresses due to the vertical and horizontal drop condition by the appropriate factor.

2. The Transfer Cask thermal stress analysis will be performed using an axi-symmetric Transfer Cask ANSYS model. Two boundary temperature distributions will be derived based on a -3°F minimum and a 103°F maximum extreme ambient case. The resulting temperature loads will be used to calculate thermal stresses for each cask component.

3. The Cask Shell handling stresses will be determined using conservative hand calculations.

4. The Seismic stress intensities will be obtained by appropriate factoring of the dead weight stresses.

5. An accidental top and bottom vertical drop analysis will be performed using an axi-symetrical ANSYS finite element model. The respective impacted surfaces (bottom surface for a bottom drop, top surface for a top drop) are restrained and an equivalent static deceleration of 75g's is applied.

6. An accidental horizontal cask drop is performed using a 3-D ANSYS finite element model. A 3-D half model of the cask will be created by rotating the axi-symmetric model 180 degrees about the centerline. The 3-D model is restrained in the drop direction and a 75g deceleration applied.

7. An accidental top corner and bottom corner and bottom corner drop analysis will be performed using the same 3-D half model. The respective corner surfaces will be restrained and a 25g vertical deceleration will be applied.

8. The Cask assembly welds will be analyzed by hand calculations using the stresses obtained from the ANSYS finite element model.

9. Stresses from tornado wind loads (DBT) and tornado generated missiles (TGM) will be hand calculated.

10. The rolling velocity of the DSC and TC required for a massive impact load against the HSM will be hand calculated. The design basis load is a 3967 lb. automobile traveling at 126 mph [10, 4].

11. Hand calculations based on the ASME Code Section NC [9] allowables for cylindrical shells will be use to determine the allowable internal pressure of the Neutron Shield Jacket. Since the Neutron Shield is assumed to be lost in the event of an accident condition, the Neutron Shield Jacket will only be analyzed for normal operating and off-normal conditions.

12. The Ram Access Penetration Ring Stress Intensities will be obtained from the ANSYS finite element model stress results and compared to allowables.

13. The Upper and Lower Trunnions will be analyzed for 4 load conditions (3 handling and 1 transportation) using a combination of hand calculations and ANSYS finite element models.

14. The Cask Lid Lifting Bolts will be analyzed using conservative hand calculations.

15. The Cask Head Bolts will be analyzed using conservative hand calculations.

16. The Bottom Cover Plate will be analyzed using stress results from the vertical drop accident condition of the ANSYS finite element model.

Loading conditions for the Transfer Cask are given in section 3.4.1. Load combinations and allowable stress criteria for the Transfer Cask are listed in Tables 3.1 and 3.2.

3.3 Analytical Idealization

In [34], the Transfer Cask was analyzed using three (3) different ANSYS [11] finite element models with the appropriate model loading and constraints to simulate the actual loading conditions. The models include:

1. An axi-symmetric Cask model for thermal loads and stresses.
2. An axi-symmetric Cask model including DSC end details for the top and bottom drop cases.
3. A 3-D half model for the horizontal and corner drop cases.

All ANSYS model assumptions, boundary conditions, and loading conditions are discussed in the appropriate calculation sections where their results are shown, and the ANSYS input files are included in the Appendices.

In this analysis, finite element results given in [34] are factored by the 32P / 24P weight ratio. New finite element results are not generated directly.

3.4 Evaluation Conditions and Criteria

3.4.1 Loading Conditions

The following are the design loadings for the Transfer Cask analysis based on the USAR [4], Table 3.2-1. They are taken directly from [34], except the thermal load is factored by 32/24 for the 32P design analyzed here:

Thermal:	Normal and Off-normal Operating thermal load is a loaded DSC inside the Transfer Cask rejecting 21.1 kW decay heat. Ambient air temperature range is -3°F to 103°F. The design temperature of the Transfer Cask is 400°F (USAR [4], Table 8.2-14),[36].
Handling:	The normal operating handling load on the Cask Shell is a hydraulic ram load due to friction of extracting loaded DSC: 23,750 lbs enveloping. The off-normal operating load (for a jammed DSC) is a hydraulic ram load equal to 95,000 lbs. Nominal.
Seismic:	The seismic load is a 0.25g (both directions) horizontal ground acceleration and a 0.17g vertical acceleration (3% critical damping).
Accident Drop:	The accident drop load is an equivalent static deceleration of 75g for a vertical end drop, 75g for a horizontal side drop, and 25g for a corner drop with slapdown (corresponds to an 80" drop height). Structural damping during drop is 10%.
Design Basis Tornado:	The maximum wind velocity is 360 mph. The maximum wind pressure is 397 psf.
Tornado Generated Missile:	This load is a 3967 lb automobile impacting the cask at 126 mph and a 276 lb, 8" diameter object impacting the cask.

3.4.2 Load Combinations

The Transfer Cask Load Combinations for normal, off-normal, emergency and accident loadings are listed in Table 3.1, taken from [34].

Table 3.1 – Transfer Cask Load Combinations

Load Case		Normal Operating Conditions					Off-Normal Conditions		Accident Conditions						
		1	2	3	4	5	1	2	1	2	3	4	5	6	7
Dead Load/Live Load		X	X	X	X	X	X	X	X	X	X	X	X	X	X
Thermal w/DSC	-3° to 103°F Ambient (1)	X	X	X	X	X	X	X	X	X	X	X	X	X	
Handling Loads (Critical Lifts)	Vertical Tilted Horizontal	X	X	X											
Handling Loads (Non-Critical)	Transport DSC Transfer				X	X	X	X	X	X					
Seismic									X	X					
Tornado Wind Loads (2)											X				
Tornado Generated Missile (2)															X
Drop	Vertical (Top & Bottom) Corner Horizontal											X	X	X	
ASME Code Service Level		A	A	A	A	A	B	B	C	C	C	D	D	D	D
Load Combination No.		A1	A2	A3	A4	A5	B1	B2	C1	C2	C3	D1	D2	D3	D4

Notes:

1. Off-normal temperature based on Table 3.6-2 of USAR [4]
2. Load case is additional to Topical Report [10] requirements.

3.4.3 Allowable Stress Criteria

The structural design criteria for the Transfer Cask is based on ASME Code Section III, Division I, Subsection NB, (Class 1) [9] as supplemented by Appendix F [9] and are given in Table 3.2 taken directly from [34].

Table 3.2 – Allowable Stress Criteria

Item	Stress Type	Stress Values(1)			
		Service Levels A & B	Service Level C	Service Level D	
				Elastic Analysis	Plastic Analysis
Transfer Cask(2) Structural Shell	General Membrane	S_m	1.2 S_m	Smaller of $2.4S_m$ or $0.7S_u$(4)	Greater of $0.7S_u$ or $S_y + 1/3(S_u - S_y)$(5)
	Local Mem + Bending	$1.5S_m$	1.8 S_m	150% of P_m Limit(5)	$0.9S_u$(5)
	Primary + Secondary	$3.0S_m$	N/A	N/A	N/A
Trunnions(7)	Membrane and Mem + Bending	Smaller of $S_y/6$ or $S_u/10$	N/A	N/A	N/A
	Shear	Smaller of $0.6\ S_y/6$ or $0.6\ S_u/10$	N/A	N/A	N/A
Fillet and Partial Penetration Welds(3)	Primary	$0.5S_m$	Greater of 0.65(6) S_m or $0.50S_y$	Smaller of $1.2S_m$ or $0.35S_u$	
	Primary + Secondary	$0.75S_m$	Smaller of $0.9S_m$ or $0.75S_y$	N/A	

Notes:

1. Values of S_y, S_m, and S_u versus temperature are given in Tables 2.2.1a -e of this package.
2. Includes full penetration welds.
3. Includes a nonvolumetric inspected weld efficiency factor of 0.5, ASME Section VIII, Div. 1, Table UW-12 No. 5 [Ref 36].
4. Local primary membrane stress, P_L, shall not exceed 150% of the P_m limit.
5. An alternative elastic analysis limit for $P_L + P_b$ is that the static or equivalent static loads shall not exceed 90% of the limit analysis collapse load using a yield stress which is the lesser of $2.3S_m$ and $0.7S_u$, or 100% of the plastic analysis or test collapse load; for plastic analysis, an alternative to the primary stress intensity limits is that the static or equivalent static loads shall not exceed 90% of the limit analysis collapse load using a yield stress which is the less of $2.3S_m$ and $0.7S_u$, or 100% of the plastic analysis or test collapse load.
6. For 0.5 efficiency factor, 0.6Sm is used for the allowable stress. However, it should be noted that even though an efficiency factor of 0.5 is applied for all nonvolumetric inspected welds, an efficiency factor higher than 0.5 is allowed for any individual welds installed by different methods. 0.65Sm is allowed for welds at Service Level C [Ref 1, Table 3.2-6].
7. Allowables of ANSI 14.6 for upper trunnion critical lifts. All other upper trunnion lifts and all lower trunnion lifts governed by the same ASME Code criteria applied to the cask structural shell.

3.4.4 Applicable Documents

The Transfer Cask is designed to conform to the design and safety criteria outlined in the Topical Report NUH-002 [10], USAR [4], and SER [5] documents. The Cask design shall meet the limits and requirements of the ASME Code [9] for Class 1 components. The Upper Lifting Trunnions will satisfy the criteria of ANSI-N14.6 for non-redundant trunnions.

4.0 Analysis

4.1 Transfer Cask Assembly Analysis

4.1.1 Dead Weight Stress Analysis

A transfer cask deadweight analysis is performed for two bounding deadweight cases, as discussed in the USAR [4]. The first is with a fully loaded cask hanging vertically from its lifting trunnions; the second is the loaded cask supported horizontally on its skid.

Deadweight stresses for the two bounding cases are obtained by scaling down the 75g vertical and side drop stresses (See Sections 4.1.5 and 4.1.6). These results are then scaled up to conservatively include the effect of the increased payload weight. The total package weight increases from 200,000 lbs to 220,000 lbs[35], an increase of 10%. However, this increase is due only to an increase of the basket and payload weight in the DSC. This increases the DSC weight from 70,000 lbs to 95,000 lbs, an increase of nearly 36%. Because certain stresses in the cask are due primarily to the weight of the DSC, all cask deadweight stresses will conservatively be increased by a factor of 1.36. Maximum stresses per cask component are summarized in Table 4.1.1.1.

Allowable stresses are based on ASME Level A&B Service limits and a 400°F design temperature [4].

General Membrane:

Stainless steel	$S_m = 18.7$ ksi	(20.0 ksi at 300°F)
Carbon steel	$S_m = 21.7$ ksi	(22.5 ksi at 300°F)

Membrane + Bending:

Stainless steel	$1.5\ S_m = 28.1$ ksi	(30.0 ksi at 300°F)
Carbon steel	$1.5\ S_m = 32.6$ ksi	(33.55 ksi at 300°F)

The resulting deadweight stresses are significantly below code allowables.

Table 4.1.1.1: Maximum Deadweight Stress Intensity Summary

Component	Stress Type	Maximum Stress Intensity (ksi)		Level A Allowable (ksi)
		Vertical Orientation	Horizontal Orientation	
Cask Structural Shell	P_M	0.16	0.68	21.7
	P_L	0.16	0.68	32.6
	P_L+P_B	0.16	0.68	32.6
Cask Inner Liner	P_M	0.12	0.68	18.7
	P_L	0.12	0.68	28.1
	P_L+P_B	0.12	0.68	28.1
Top Flange	P_M	0.33	0.68	18.7
	P_L+P_B	0.33	1.02	28.1
Top 3" Cover Plate	P_M	0.37	0.52	18.7
	P_L+P_B	0.37	0.68	28.1
Bottom Support Ring	P_M	0.33	0.68	18.7
	P_L+P_B	0.33	1.02	28.1
Bottom 2" Cover Plate	P_M	0.23	0.68	18.7
	P_L+P_B	0.23	0.86	28.1
Bottom ¾" Cover Plate	P_M	0.12	0.34	18.7
	P_L+P_B	0.12	0.68	28.1
Bottom 1" Cover Plate	P_M	0.08	0.34	18.7
	P_L+P_B	0.08	0.68	28.1
Ram Access Penetration Ring	P_M	0.24	0.52	18.7
	P_L+P_B	0.24	0.68	28.1

4.1.2 Thermal Stresses

This section addresses the structural integrity of the transfer cask subjected to thermal expansion loads associated with normal and off-normal conditions.

Using an ANSYS analytical model, two transfer cask temperature distributions are derived, representing bounding thermal conditions. The resulting temperature loads are then applied to calculate thermal stresses for each cask component. Since the ANSYS results were obtained from the smaller payload case of the previous calculation package [34], a new analysis was completed to reflect the increased payload and the new basket configuration [36]. The new analysis resulted in temperatures very close to those calculated previously. This is assumed to be due to the large amount of conservatism included in the previous model. Therefore, the thermal stresses used in the previous stress analysis are applied unchanged in this calculation. The maximum resulting stress intensities for individual components are compared to ASME Level A allowables.

Transfer Cask Model

In [34], the transfer cask thermal loads are calculated for two bounding temperature cases using a 2D axisymmetric ANSYS model:

"Hot" ambient condition, 103° F, including solar heat.

"Cold" ambient condition, -3°F, neglecting solar heat.

From the USAR [4]: Under normal operating conditions, ambient air temperatures fluctuate from -3°F minimum (winter) to 103°F maximum (summer). These temperatures represent the historical extremes recorded near the Calvert Cliffs ISFSI. Off-normal conditions are the same as normal conditions.

The cask model is an axi-symmetric prototype, including the structural shell, the inner shell liner, the outer shell, the radial lead and neutron shielding materials, and the cask top and bottom cover plate assemblies. Cask components have been modeled with detailed geometric accuracy based on nominal dimensions as obtained form the latest revision drawings [6].

Two runs are made for each ambient case; a thermal run to determine the temperature distributions; and a structural run to determine the stresses induced by the temperature loads. Temperature distributions are color plotted in Figures 4.1.2.1 and 4.1.2.3 of [34]. The resulting stress intensity contours are color plotted in Figures 4.1.2.2 and 4.1.2.4 of [34].

Thermal Load Input

Fuel Decay Heat

A loaded DSC carrying 24 fuel assemblies rejects 15.8 kW (53,900 BTU/hr) of decay heat power [4]. The heat for 32 assemblies is therefore 32/24 x 15.8 = 21.1 kW (71,900 BTU/hr). This heat flow is assumed uniform along the transfer cask inner surfaces, and applied to both models as a surface load.

TC inner surface area, $A_I = (2\pi 34)(173.5) + 2(\pi 34^2) = 44{,}328 \text{ in}^2$

Heat flux per unit area, $Q/A_I = 71{,}900 / 44{,}328 = 1.62 \text{ BTU / hr in}^2$

Solar Heat

A bounding solar heat flux for normal operating conditions of 62 BTU/hr ft^2 (0.43 BTU/hr in^2) was used for analysis in the Topical Report [10]. This solar flux is applied as a heat generating body load uniformly distributed along the cask outer surface length, assuming the cask rests horizontally. Solar load is applied to the "hot ambient" model only.

Heat Loss

Convection coefficients are based on simplified equations for heat loss from various surfaces to air found in Holman, Heat Transfer [31]. Assume turbulent flow, and $\Delta T = 83.3$ C.

Horizontal cylinder: $h'_s = 1.24\ (\Delta T)^{1/3}$

$$= 1.24\ (83.3)^{1/3}$$

$$= 5.42\ W/m^2\,°C$$

$$= 0.0066\ BTU/hr\ in.^2\,°F$$

Cask end plates: $h'_p = .95\ (\Delta T)^{1/3}$

$$= .95\ (83.3)^{1/3}$$

$$= 4.15\ W/m^2\,°C$$

$$= 0.0051\ BTU/hr\ in.^2\,°F$$

Convection coefficients are applied as surface loads along transfer cask outer surfaces in both models.

Thermal Properties

Thermal Conductivity

Material	Thermal Conductivity (BTU/hr in. °F)	Assumed Temperature (°F)	Reference
Stainless steel	0.867	400	[14]
Lead	1.584	200	[32]
Carbon steel	2.034	300	[14]
BISCo NS3	0.079	150-250	[17]

Thermal Expansion

Values of instantaneous coefficients of thermal expansion for the above materials are found in Section 2.2. For other material properties see NUTECH ANSYS input [7] (values assumed correct).

Results Summary

The transfer cask thermal distributions are color plotted in Figure 4.1.2.1 (hot ambient) and Figure 4.1.2.3 (cold ambient) of the previous calculation [34]. The hot and cold ambient resulting stress intensity contours are color plotted in Figures 4.1.2.2 and 4.1.2.4 of [34], respectively. Maximum thermal stress intensities, ignoring concentrated peak stresses (F stresses), for each transfer cask component are conservatively taken from the color contours and summarized in Table 4.1.2.1 of [34] and repeated in Table 4.1.2.1 of this calculation.

The allowable thermal (secondary) stresses are based on a 400 F design temperature:

Stainless steel	$3.0\ S_m = 3.0\ (18.7) = 56.1$ ksi
Carbon steel	$3.0\ S_m = 3.0\ (21.7) = 65.1$ ksi

Resulting stress intensities are significantly below allowable limits.

Very localized stresses, as high as 55 ksi for the hot ambient case and 42 ksi for the cold ambient case occur at the discontinuity junctions between the cask structural shell and the top and bottom support rings. High stresses are expected at these joints since the carbon steel shell has a greater coefficient of thermal expansion (7.6×10^{-6}) than the stainless steel support rings (9.8×10^{-6}). These concentrated localized stresses are classified as peak, F, stresses. Concentrated peak stresses are ignored when selecting the stress values that appear in Table 4.1.2.1.

Table 4.1.2.1: Maximum Thermal Stress Intensity Summary

Component	Stress Type	Maximum Stress Intensity (ksi)		Code Allowable (ksi)
		Hot Ambient Case	Cold Ambient Case	
Cask Structural Shell	P_L+P_B+Q	28.5	24.0	65.1
Cask Inner Liner	P_L+P_B+Q	18.0	15.0	56.1
Top Flange	P_L+P_B+Q	18.0	15.0	56.1
Top 3" Cover Plate	P_L+P_B+Q	11.0	9.0	56.1
Bottom Support Ring	P_L+P_B+Q	18.0	18.0	56.1
Bottom 2" Cover Plate	P_L+P_B+Q	11.0	15.0	56.1
Bottom ¾" Cover Plate	P_L+P_B+Q	18.0	21.0	56.1
Bottom 1" Cover Plate	P_L+P_B+Q	11.0	9.0	56.1
Ram Access Penetration Ring	P_L+P_B+Q	11.0	18.0	56.1

4.1.3 Handling Stresses

Cask Shell and Cask Plate Handling Stresses

The following handling conditions are considered in the Cask Shell handling stress analysis, as described in [34]:

1. Vertical
2. Tilt
3. Horizontal
4. At HSM
5. Transfer

Only the critical conditions will be analyzed. Cases which are bounded by others will not be considered. Local stresses due to trunnion loading are analyzed in Section 4.4, trunnion analysis.

1.) Vertical Handling Condition

The critical vertical handling condition occurs at the fuel pool. The cask loading includes the DSC with fuel assemblies and water occupying the free space.

Total Load = 220,000 lbs (Section 2.3)

Maximum Longitudinal Shell Stress

$$\sigma = \frac{P}{A}$$

$$A = \pi D_{av} t$$

$$= \pi (79'')(1.5'')$$

$$= 372.3 in^2$$

$$\sigma = \frac{220^K}{372.3 in^2} = 0.59 \text{ Ksi}$$

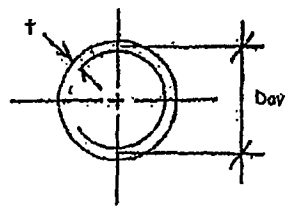

Maximum Hoop Stress Due to Water Pressure

$P_{max} = \gamma h$

where h = 186.13"

conservatively using the full length of the cask. [6]

$$P_{max} = \frac{62.4\ lb/ft^3 * 186.13\ in}{(12\ in/ft)^3} = 6.72\ psi$$

$$\sigma = \frac{Pr}{t} = \frac{6.72\,psi * 39.5"}{1.5"} = 177.0\,psi$$

Inner Bottom Cask Plate Bending Stress

Total Load = Loaded DSC with Water = 104,000 lbs per Section 2.3

[redacted]

Use 68.0" as the effective plate diameter for maximum bending.

$$q_{max} = \frac{\text{Total Load}}{\text{Area}} = \frac{104{,}000\,lbs}{\pi(68in)^2/4} = 28.6\ psi$$

Conservatively assume a simply supported circular plate and using [22], Table 24, Case 10a with $r_o = 0$

$$M = \frac{q\,a^2(3+\nu)}{16}$$

$$= \frac{(0.029\,\text{ksi})(34'')^2(3+0.29)}{16} = 6.89\ \text{K}-\text{in/in}$$

$$\sigma = \frac{6M}{t^2} = \frac{6(6.89\,\text{K}-\text{in/in})}{(2'')^2} = 10.34\,\text{ksi}$$

2.) Tilt Handling Condition

Tilt handling condition stresses, which occur when the cask is supported between the trunnions and the tilt ring, are bounded by the transfer handling stresses. Therefore the tilt condition stresses need not be considered.

3.) Horizontal Handling Condition

The horizontal handling stresses are considered with the cask supported in the horizontal position by the trunnions and the tilt ring. The horizontal handling stresses are bounded by the transfer stresses and , therefore, need not be considered.

4.) Handling Condition at the HSM

The applied loads to the cask at the HSM consist of a 23,750 lb normal operating force from the ram and a 95,000 lb force from the ram with the canister stuck within the HSM. These forces are transmitted from the ram to the cask and then to the HSM.

Since the 215,000 lb force acting on the cask during transfer handling bounds the 23,750 lb and 95,000 lb loads at the HSM, this loading condition need not be considered.

5.) Transfer Handling Conditions

The acceleration loads at transfer are:

1g vertical

1g axial

1g horizontal

1/2g in all directions, simultaneously [30]

The cask shell stresses are analyzed for the cask simply supported between the upper and lower trunnions. The forces are assumed to be uniformly distributed over the length of the cask shell.

The weight of the cask with the DSC and fuel assemblies during transfer = 215,000 lbs per Section 2.3.

The resulting applied forces are then:

1g vertical $= 215^K$

1g axial $= 215^K$

1g horizontal $= 215^K$

1/2g combined $= 107.5^K + 107.5^K + 107.5^K$

The distributed loads are:

Vertical $= 215^K / 180.88" = 1.19\ ^K/in$

Horizontal $= 215^K / 180.88" = 1.19\ ^K/in$

Bending Stress Due To 1g Vertical Acceleration

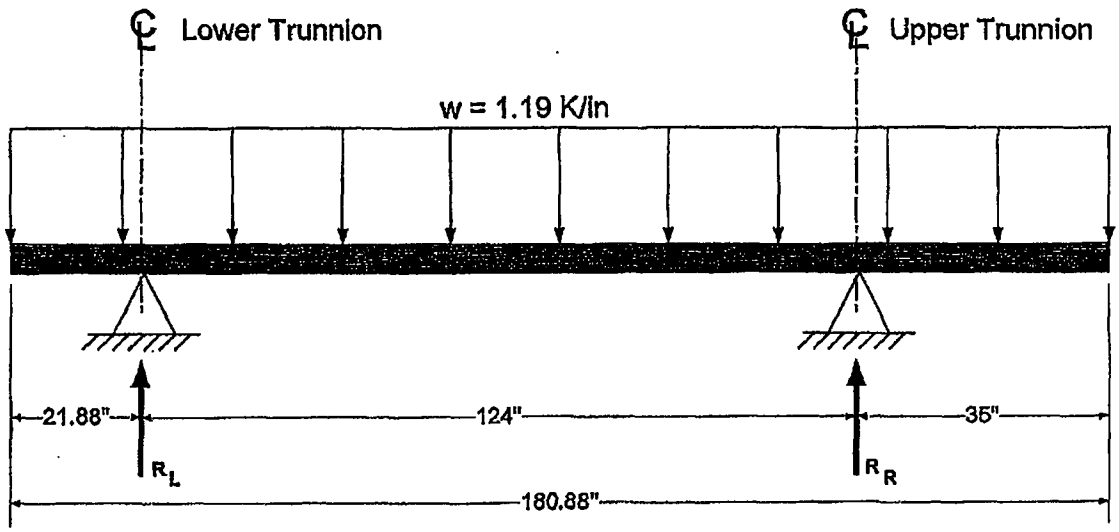

$\Sigma M_L = 0$: $R_R\,(124.0) - (1.19^K/\text{in})(180.88")(68.56) \Rightarrow R_R = 119^K$

$\Sigma F_Y = 0$: $119 + R_L - 1.19(180.88) = 0 \Rightarrow R_L = 96.2^K$

Maximum shear and maximum moment for the above loading are found to be 76.7^K and 1769 k-in, respectively.

For the Structural Shell section:

$$I = \frac{\pi((80.5")^4 - (77.5")^4}{64} = 290{,}529\,\text{in}^4$$

$$\sigma_b = \frac{Mc}{I} = \frac{(1769\,\text{k-in})(80.5/2)}{290{,}529\,\text{in}^4} = 0.25\ \text{Ksi}$$

$$\sigma_v = \frac{P}{A} = \frac{76.7^K}{\pi(79")(1.5")} = 0.21\ \text{Ksi}$$

$$S.I._{max} = \frac{0.25}{2} + \left[\left(\frac{0.25}{2}\right)^2 + 0.21^2\right]^{1/2} = 0.37\ \text{Ksi}$$

Bending Stress Due To 1g Horizontal Acceleration

Since the horizontal loading is the same as the vertical loading, the resulting stress is the same.

$\sigma_b = 0.25\,\text{Ksi}$

Axial Stress Due to Axial Acceleration

$$\sigma = \frac{P}{A} = \frac{215^K}{\pi(79")(1.5")} = 0.58\ \text{Ksi}$$

Stress Due to ½ g Combination Acceleration

Factoring the 1g results by ½:

1/2g vertical	= 0.13 Ksi
1/2g horizontal	= 0.13 Ksi
1/2g axial	= 0.29 Ksi
1/2g shear	= 0.11 Ksi

For the combined ½ g loading case, shear can be neglected.

$$\text{S.I.} = \frac{\sigma_x + \sigma_y}{2} \pm \left[\left(\frac{\sigma_x - \sigma_y}{2}\right)^2 + \tau^2\right]^{1/2}$$

$$\text{S.I.} = \frac{0.13 + 0.29}{2} + \left[\left(\frac{0.29 - 0.13}{2}\right)^2 + 0.11^2\right]^{1/2} = 0.35\ \text{Ksi}$$

Bending Stress on Cask End Plate Due to Axial Accel (Cask in horizontal position)

Total Force on Plates = DSC + End Plate Mass x 1g

Conservatively using the Top Cover Plate Mass,

Total Force = 92,613 + 5290 = 97,903 Use 98,000 lbs

Top Cover PL, 3", Simply Supported w/ Uniform Load

[redacted]

$$q = \frac{98^K}{\pi (73.12")^2 / 4} = 0.023\,Ksi$$

$$M = \frac{q\,a^2(3+\nu)}{16}$$

$$= \frac{(0.023\,ksi)(36.6")^2(3+0.29)}{16} = 6.33\,K-in/in$$

$$\sigma = \frac{6M}{t^2} = \frac{6(6.33\,K-in/in)}{(3")^2} = 4.22\,ksi$$

Inner Bottom Cover PL, 2", w/ uniform load

Conservatively assume that the plate is simply supported at the inner and outer edges. Using [22], Table 24, Case 2c, where:

$a = 68/2 = 34$

$b = 23/2 = 11.5$

Resulting in $b/a = 0.34$ giving $K_m = 0.0502$

$$M = K_m q a^2$$

$$= 0.0502\left[\frac{98^K(4)}{\pi(68^2 - 23^2)}\right](34")^2 = 1.77\ K-in/in$$

$$\sigma = \frac{6M}{t^2} = \frac{6(1.77)}{2^2} = 2.66\,Ksi$$

[redacted]

Alternately, consider the lid as a simply supported plate without a center hole using [22], Case 10a:

$$M = \frac{q\,a^2(3+\nu)}{16}$$

$$\doteq \frac{\left(\frac{98(4)}{\pi(68)^2}\right)(34")^2(3+0.29)}{16} = 6.41\,K-in/in$$

$$\sigma = \frac{6M}{t^2} = \frac{6(6.41K-in/in)}{(2")^2} = 9.62\,Ksi$$

This is the worst case.

Pinched/Jammed DSC in Cask at HSM

This load case considers the impact on the transfer cask inner shell due to the DSC becoming jammed during HSM loading.

Transfer Cask:

Length = 186" [6]

I.D. = 68"

Dry Shielded Canister:

Length = 172.75" [6]

O.D. = 67.25"

Assume a worst case of the DSC becoming jammed while in the Transfer Cask.

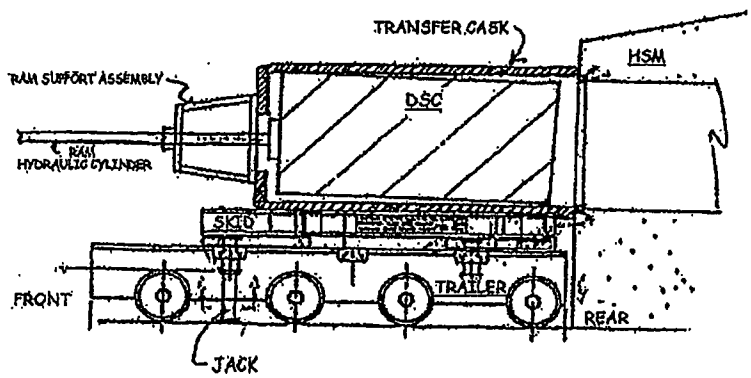

Determine the angle between the DSC and the Cask when "jamming" occurs:

Gap between DSC and Cask = 0.75"

$$\alpha = \tan^{-1}\left(\frac{0.75}{172.75}\right) = 0.25° \quad \Rightarrow \text{say } 0.5°$$

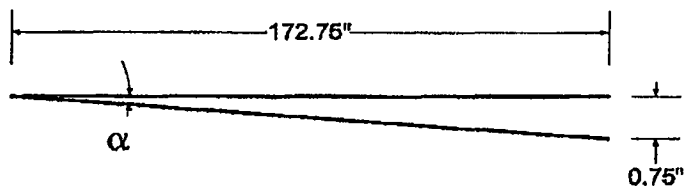

Determine the force transmitted to the cask inner shell, assuming a 0.5° angle between the cask and the DSC due to a Hydraulic ram load equal to 95^K.

Assuming a point load contact at the inner shell,

$P_t = 95^K \sin(0.5°) = 0.83^K$

$P_{long} = 95^K \cos(0.5°) \cong 94.9^K$

Membrane Stresses (from [22], Table 31, Case 9a):

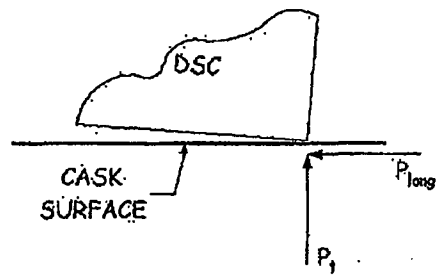

$$\sigma_{m1} = \frac{0.4P_t}{t^2} = \frac{0.4(0.83)}{0.75^2} = 0.59\,\text{Ksi}$$

$$\sigma_{m2} = \frac{94.9}{(12")(0.75)} = 10.54\,\text{Ksi}$$

(assuming a 12" contact length)

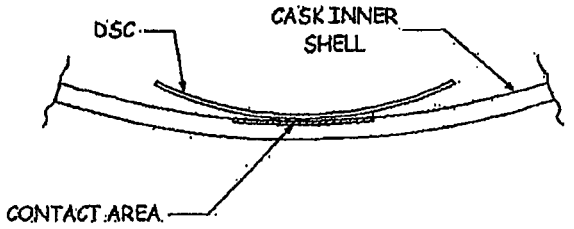

Bending Stresses (from [22], table 31, Case 9a):

$$\sigma_b = \frac{2.4P_t}{t^2} = \frac{2.4(0.83)}{0.75^2} = 3.5\,\text{Ksi}$$

Therefore the membrane stress is:

$P_m = P_l = 0.59 + 10.54 = 11.1$ Ksi

Membrane plus bending, $P_{lm} + P_{lb} = 11.1 + 3.5 = 14.6$ Ksi

This load case envelops the operating handling case of 23,750 lb ram load.

All other component transfer S.I.'s will be negligible and will not be calculated in this section.

Upper Trunnion ANSYS® Model

Based on a previous finite element model of the upper trunnion and insert plate / structural shell ([7], ANSYS computer run 10g), the following component stress intensities are obtained under transfer handling condition. These stresses are then scaled up by a factor of 1.1 to account for the increased DSC weight. As shown in Section 2.3, the maximum combined weight to be used in the calculations is 215,000 lbs. The weight used in the previous calculation [34] was 200,000 lbs resulting in the 1.1 factor. The ANSYS analysis referenced above includes a dead weight component in each of the load combinations evaluated. Therefore, the stresses given here include the effect of the cask dead weight. This is described in detail in the original Nutech calculation (Reference 7). The Load Combination Results given in Section 5.2 for the Cask Structural Shell (Bottom Support Ring) will not include the dead weight value calculated separately in Section 4.1.1 above, since the effect of the dead weight load is included in the ANSYS result.

1. Cask Structural Shell:

   $S.I._{max}$ = 5.0 Ksi P_m @ Node 178

   $S.I._{max}$ = 27.7 Ksi $P_L + P_b$ @ Node 167

   Scaling up

   $S.I._{max}$ = 1.1 x 5.0 Ksi = 5.5 Ksi P_m @ Node 178

   $S.I._{max}$ = 1.1 x 27.7 Ksi = 30.5 Ksi $P_L + P_b$ @ Node 167

2. Top Flange Ring:

   $S.I._{max}$ = 1.5 Ksi P_m @ Node 71

   $S.I._{max}$ = 6.4 Ksi $P_L + P_b$ @ Node 222

   Scaling up

   $S.I._{max}$ = 1.1 x 1.5 Ksi = 1.7 Ksi P_m @ Node 71

   $S.I._{max}$ = 1.1 x 6.4 Ksi = 7.0 Ksi $P_L + P_b$ @ Node 222

Lower Trunnion ANSYS Model

Based on a previous finite element model of the lower trunnion and structural shell ([7], ANSYS computer run log), the following component stress intensities are obtained under transfer handling condition. Again, these results are scaled up by a factor of 1.1 to account for the increased DSC weight. The ANSYS analysis referenced above includes a dead weight component in each of the load combinations evaluated. Therefore, the stresses given here include the effect of the cask dead weight. This is described in detail in the original Nutech calculation (Reference 7). The Load Combination Results given in Section 5.2 for the Bottom Support Ring will not include the dead weight value calculated separately in Section 4.1.1 above, since the effect of the dead weight load is included in the ANSYS result.

Bottom Support Ring:

$S.I._{max} = 4.6$ Ksi P_m @ Node 180

$S.I._{max} = 26.9$ Ksi $P_L + P_b$ @ Node 169

Scaling up:

$S.I._{max} = 1.1 \times 4.6$ Ksi $= 5.1$ Ksi P_m @ Node 180

$S.I._{max} = 1.1 \times 26.9$ Ksi $= 29.6$ Ksi $P_L + P_b$ @ Node 169

Table 4.1.3.1 Handling Stress Intensity Results

Component	Stress Type	Element	Stress Intensities (Ksi)	
			Vert. / Fuel Pool	Transfer
Cask Structural Shell	P_m	------	0.59	5.5*
	Local Membrane	------	------	5.5*
	$P_L + P_b$	------	------	30.5*
	$P_L + P_b + Q$	------	------	------
Cask Inner Shell	P_m	------	------	11.1
	$P_L + P_b$	------	------	14.6
	$P_L + P_b + Q$	------	------	------
Top Flange Ring	P_m	------	------	1.65*
	$P_L + P_b$	------	------	7.0*
	$P_L + P_b + Q$	------	------	------
Top 3" Cover Plate	P_m	------	------	------
	$P_L + P_b$	------	------	4.22
	$P_L + P_b + Q$	------	------	------
Bottom Support Ring	P_m	------	------	5.1*
	$P_L + P_b$	------	------	29.6*
	$P_L + P_b + Q$	------	------	------
Inner Bottom 2" Cover Plate	P_m	------	------	------
	$P_L + P_b$	------	10.3	9.62
	$P_L + P_b + Q$	------	------	------

* From trunnion ANSYS model

4.1.4 Seismic Analysis

As discussed in Section 8.2.3 of the Topical Report [10], the maximum expected horizontal and vertical ground accelerations are 0.25g and 0.17g, respectively. Seismic stresses, summarized in Table 4.1.4.1 are obtained by factoring the worst component deadweight stress by two (conservative). The deadweight stress has been increased by a factor of 1.36 (as described in Section 4.1.1) to account for the increased payload. This conservative method assumes the weight of the entire Cask/DSC assembly increases by 36% instead of the more accurate 10% used above in the trunnion analysis. This is done because some components, such as the inner liner, are loaded primarily by the DSC and thus the stresses would be underestimated using the 10% assembly weight increase. The reported stress intensities are significantly below allowables.

Seismic allowable stresses are based on ASME Level C limits and a 400°F design temperature.

General Membrane:

Stainless steel	$1.2\ S_m = 1.2\ (18.7) = 22.4$ ksi
Carbon steel	$1.2\ S_m = 1.2\ (21.7) = 26.0$ ksi

Membrane + Bending:

Stainless steel	$1.8\ S_m = 1.8\ (18.7) = 33.7$ ksi
Carbon steel	$1.8\ S_m = 1.8\ (21.7) = 39.1$ ksi

Table 4.1.4.1: Maximum Seismic Stress Intensity Summary

Component	Stress Type	Maximum Stress Intensity (ksi) Seismic (2g)	Level C Allowable (ksi)
Cask Structural Shell	P_M	1.4	26.0
	P_B	1.4	39.1
	P_L+P_B	1.4	39.1
Cask Inner Liner	P_M	1.4	22.4
	P_B	1.4	33.7
	P_L+P_B	1.4	33.7
Top Flange	P_M	1.4	22.4
	P_L+P_B	2.0	33.7
Top 3" Cover Plate	P_M	1.1	22.4
	P_L+P_B	1.4	33.7
Bottom Support Ring	P_M	1.4	22.4
	P_L+P_B	2.0	33.7
Bottom 2" Cover Plate	P_M	1.4	22.4
	P_L+P_B	1.8	33.7
Bottom ¾" Cover Plate	P_M	0.7	22.4
	P_L+P_B	1.4	33.7
Bottom 1" Cover Plate	P_M	0.7	22.4
	P_L+P_B	1.4	33.7
Ram Access Penetration Ring	P_M	1.1	22.4
	P_L+P_B	1.4	33.7

4.1.5 Vertical Drop Analysis

This section addresses the structural integrity of the transfer cask under a postulated accidental vertical end drop.

The transfer cask is designed for a bounding drop from a height of 80 inches onto a 36-inch thick under-reinforced concrete slab. As discussed in Section 8.2.5.1 of the Topical Report [13], a resulting static equivalent deceleration of 75g's has been conservatively established for the postulated vertical orientation drop accident.

Structural qualification of the transfer cask subjected to top and bottom 75g end drops are based on linear elastic analyses using ANSYS computer models. The maximum resulting stress intensities for individual transfer cask components are compared to Level D elastic analysis allowables.

The detailed description of the analysis is given in [34]. This includes the model, loading conditions and boundary conditions. The results have been selectively scaled to reflect the increased weight of the loaded DSC. In the end drop, nearly all of the DSC load is taken by the underlying end components of the cask. Therefore, the stresses in these components have been increased proportionately to the increase in DSC weight. The scaling factor is 68,400/45,189 = 1.51. The remaining stresses in the cask are left unchanged since the cask weight is unchanged from the analysis in [34].

Results Summary

Maximum stress intensities, ignoring concentrated peak stresses (F stresses), for each transfer cask component are conservatively taken from [34], scaled as described above and summarized in Table 4.1.5.1.

Vertical drop allowable stresses are based on ASME Level D elastic analysis limits and a 400°F design temperature [4].

General Membrane:

Stainless steel	$2.4\ S_m = 2.4\ (18.7) = 44.9$ ksi
Carbon steel	$0.7\ S_u = 0.7\ (70.0) = 49.0$ ksi

Membrane + Bending:

Stainless steel	$1.0\ S_u = 1.0\ (64.4) = 64.4$ ksi
Carbon steel	$1.0\ S_u = 1.0\ (70.0) = 70.0$ ksi

Resulting stress intensities are significantly below allowable limits.

Concentrated localized stresses (classified as peak F stresses) occur at the neutron shield bottom support ring to cask bottom structural ring junction during a bottom drop, and at the neutron shield top support ring to cask top structural ring junction during a top drop. Additionally, very localized peak stresses occur at the edges of the top cover plate and top structural ring due to impact of the neutron top casing shell during a top drop. Concentrated peak stresses are ignored when selecting the stress values that appear in Table 4.1.5.1.

Table 4.1.5.1: Vertical Drop Maximum Stress Intensity Summary

Component	Stress Type	Maximum Stress Intensity (ksi)		Level D Allowable (ksi)
		Top Drop	Bottom Drop	
Cask Structural Shell	P_M	8.75	8.75	49.0
	P_B	8.75	8.75	70.0
	P_L+P_B	8.75	8.75	70.0
Cask Inner Liner	P_M	6.50	6.50	44.9
	P_B	6.50	6.50	64.4
	P_L+P_B	6.50	6.50	64.4
Top Flange	P_M	17.8	4.25	44.9
	P_L+P_B	17.8	4.25	64.4
Top 3" Cover Plate	P_M	30.2*	6.50	44.9
	P_L+P_B	30.2*	6.50	64.4
Bottom Support Ring	P_M	6.50	26.9*	44.9
	P_L+P_B	6.50	26.9*	64.4
Bottom 2" Cover Plate	P_M	13.3	20.1*	44.9
	P_L+P_B	13.3	20.1*	64.4
Bottom ¾" Cover Plate	P_M	6.50	6.4*	44.9
	P_L+P_B	6.50	6.4*	64.4
Bottom 1" Cover Plate	P_M	4.25	6.4*	44.9
	P_L+P_B	4.25	6.4*	64.4
Ram Access Penetration Ring	P_M	8.75	20.1*	44.9
	P_L+P_B	8.75	20.1*	64.4

* Values increased by a factor of 1.51 to account for increased payload weight.

4.1.6 Horizontal Drop Analysis

A 75g static equivalent deceleration has been conservatively established for the postulated side drop orientation, as discussed in Section 8.2.5.1 of the Topical Report [10]. A transfer cask side drop analysis is performed using the 3-D ANSYS computer model illustrated in Figure 4.1.6.1. A 3-D half-model was generated by rotating the 2-D axi-symmetric cask model (Figure 4.1.5.1) 180 degrees about the axis of symmetry. A side drop is simulated by restraining the nodes along one side of the cask and applying the 75g deceleration.

Previous side drop evaluations were performed using non-axisymmetric loading on a 2-D axisymmetric cask model (see Section 4.1.5 of the Nutech Calculation Package [7] and Appendix C.3 of the Topical Report [10]). Impact, content, and self-weight loads were applied as pressure resolved into Fourier harmonics. Under such loading, the cask shell is squeezed between the concrete impact load and the opposing DSC and cask self weight loads. The rest of the transfer cask is entirely unloaded.

The effect of the added weight of the current payload is resolved by increasing the stresses in the Cask Structural Shell and Inner Liner by a factor of 1.1 which reflects the increase of the weight of the Cask and DSC. This is conservative in that the current basket design spreads evenly along the length of the Cask, while the former basket included Spacer Plates which, as calculated below, apply concetrated pressure loads at the Spacer Plate locations. The stresses of the end components of the Cask are not changed, in that they do not see the effect of the increased payload.

The detailed description of the analysis is given in [34]. This includes the model, loading conditions and boundary conditions. The results have been selectively scaled to reflect the increased weight of the loaded DSC. The remaining stresses in the cask are left unchanged since the cask weight is unchanged from the analysis in [34].

Results Summary

Side drop allowable stresses are based on ASME Level D elastic analysis limits and a 400°F design temperature.

The stress intensities due to the revised content weight are scaled from the stress results using the previous content loading. The revised stress results are shown in Table 4.1.6.1 below.

Resulting stress intensities are below allowable limits.

Table 4.1.6.1: Horizontal Drop Maximum Stress Intensity

Component	Stress Type	Maximum Stress Intensity (ksi) Side Drop	Level D Allowable (ksi)
Cask Structural Shell	P_M	41.3	49.0
	P_B	41.3	70.0
	P_L+P_B	41.3	70.0
Cask Inner Liner	P_M	41.3	44.9
	P_B	41.3	64.4
	P_L+P_B	41.3	64.4
Top Flange	P_M	37.5	44.9
	P_L+P_B	56.3	64.4
Top 3" Cover Plate	P_M	28.1	44.9
	P_L+P_B	37.5	64.4
Bottom Support Ring	P_M	37.5	44.9
	P_L+P_B	56.3	64.4
Bottom 2" Cover Plate	P_M	37.5	44.9
	P_L+P_B	46.9	64.4
Bottom ¾" Cover Plate	P_M	18.8	44.9
	P_L+P_B	37.5	64.4
Bottom 1" Cover Plate	P_M	18.8	44.9
	P_L+P_B	37.5	64.4
Ram Access Penetration Ring	P_M	28.1	44.9
	P_L+P_B	37.5	64.4

Cask Drop onto a Curb

During transport of the DSC from the fuel building to the ISFSI, the transfer cask is hauled along a paved road. In the very unlikely event of a sideways tip-over, the cask may impact the curb at the side of the road.

Asphalt or lightly reinforced concrete roads along the transport route do not have the shear capacity to withstand the impact from an object as massive and stiff as the transfer cask. Punching shear failures would be expected to occur for deceleration values as low as 2.6g's for a side drop [10]. A cask drop onto a 6-inch curb, then, would drive the curb right through the surface of the road and subgrade, such that the underlying soil would bear the load.

Assume that the transfer cask is a rectangular footing. To determine the ultimate bearing capacity of a rectangular footing equation (14.12) from Lambe and Whitmans' Soil Mechanics [33]:

$$\frac{Q_b}{BL} = \left(\Delta q\right)_b = 1/2\gamma B N_\gamma \left(1 - 0.3\frac{B}{L}\right) + \gamma d N_q \left(1 + 0.2\frac{B}{L}\right)$$

where B is the footing width (varies with depth), L is the footing length (neutron shield length = 165.5"), and d is the "effective depth" (taken as the centroid of the buried circular segment). Bearing capacity factors N_γ and N_q are based on an assumed friction angle $\phi = 44°$. The soil density, γ, is assumed to be 150 lb/ft^3.

Bearing capacity is calculated for increasing footing width and "effective depth". A calculation given in [34] shows that 10.1 inches of penetration is required to absorb the impact energy. The product of the footprint (9667.8 in^2, column 13) and the soil capacity (530.7 lb/in^3, column 15) divided by the weight of the transfer cask (190 kips) gives a deceleration of about 27g's. Note that the 190 kips used in the above calculation is conservative in that the actual weight (215,000 lbs) will require a greater crush depth and thus decreased acceleration.

4.1.7 Corner Drop Analysis

A 25g static equivalent deceleration has been conservatively established for the postulated corner drop orientation, as discussed in Section 8.2.5.1 of the Topical Report [10]. Two transfer cask corner drop analyses, a top corner drop and a bottom corner drop, were performed using the 3-D ANSYS computer model illustrated in Figure 4.1.6.1. Corner drops are simulated by restraining the respective top and bottom corner surfaces and applying a resultant 25g deceleration. The previous analysis using the lower gross weight is used in the following calculation to define the model pressure loadings. In lieu of rerunning the analysis for the heavier gross weight, the results of the previous analyses are scaled up be a factor of 215,000/200,000 = 1.1 to account for the increased gross weight.

Results Summary

Maximum stress intensities, ignoring concentrated peak stresses (F stresses), for each transfer cask component are conservatively taken from [34] and are summarized here in Table 4.1.6.1.

The resulting stress intensities are below allowable limits.

Table 4.1.7.1: Corner Drop Maximum Stress Intensity Summary

Component	Stress Type	Maximum Stress Intensity (ksi)		Level D Allowable (ksi)
		Top Corner Drop	Bottom Corner Drop	
Cask Structural Shell	P_M	30.9	30.9	49.0
	P_B	30.9	30.9	70.0
	P_L+P_B	41.3	41.3	70.0
Cask Inner Liner	P_M	30.9	30.9	44.9
	P_B	30.9	30.9	64.4
	P_L+P_B	41.3	41.3	64.4
Top Flange	P_M	41.3	20.7	44.9
	P_L+P_B	51.6	20.7	64.4
Top 3" Cover Plate	P_M	30.9	20.7	44.9
	P_L+P_B	30.9	20.7	64.4
Bottom Support Ring	P_M	10.3	41.3	44.9
	P_L+P_B	10.3	41.3	64.4
Bottom 2" Cover Plate	P_M	10.3	41.3	44.9
	P_L+P_B	10.3	41.3	64.4
Bottom ¾" Cover Plate	P_M	10.3	41.3	44.9
	P_L+P_B	10.3	41.3	64.4
Bottom 1" Cover Plate	P_M	10.3	20.7	44.9
	P_L+P_B	10.3	20.7	64.4
Ram Access Penetration Ring	P_M	10.3	20.7	44.9
	P_L+P_B	10.3	20.7	64.4

4.1.8 Weld Stresses

- Check Weld at top flange ring/cask outer structural shell:

  Full penetration weld used, therefore no analysis is required.

- Check weld at bottom flange ring/outer structural shell:

  Full penetration weld used, therefore no analysis is required.

- Check weld at bottom support ring/inner bottom cover plate:

  Full penetration weld used, therefore no analysis is required.

- Check weld at inner bottom cover plate/ram access penetration ring:

  This weld will be analyzed for loading during the critical lift handling condition and the vertical bottom drop condition.

[redacted]

Ram Access Penetration Ring Weld Configuration

1. Handling Condition:

Loading during critical lift – the inner bottom cover plate supports the weight of the DSC during the lift condition. The load is increased by 15% to account for motion loads.

Wt of DSC and Internals w/ Fuel = 95.0^K (Section 2.3)

Total Load = 95.0^K x 1.15 = 109.25^K Say 110.0^K

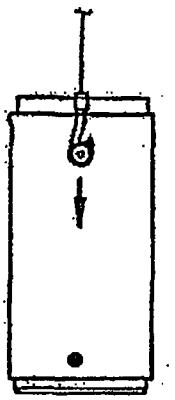

CASE 1: VERTICAL LIFT

Assume that the fuel and DSC base assembly load the cask baseplate as a uniform pressure load:

Fuel weight = 46,400 lbs

Base weight, estimated:

Lead, assuming a 4.25" thickness

$= 0.411\ (4.25)\ (\pi/4)\ (67)^2 \quad = 6{,}158$ lb

Steel, assuming a 2.5" thickness

$= 0.29\ (2.5)\ (\pi/4)\ (67)^2 \quad = 2{,}556$ lb

8,714 lb

Total weight evenly distributed = 46,400 + 8,714 = 55,114 lb

The pressure applied is then:

$$Q = P/A = 55{,}114 / [\pi/4\ (68^2 - 23^2)] = 0.02\ K/in^2$$

The remaining weight of the DSC, which includes the basket, shell and top plate, can conservatively be represented as a pressure load that decreases toward the center of the plate. Using Roark, Table 24, Case 3b:

The total force, F, can be expressed as the product of the shear force per inch at the outer edge of the plate times the circumference

$$F = Q_a (2\pi a)$$

But Q_a can also be expressed as a function of the maximum pressure, q, and the dimensions of the loading configuration:

$$Q_a = \frac{q}{6a}\left(2a^2 - r_o a - r_o^2\right)$$

Combining and solving for q :

$$q = \frac{3F}{\pi\left(2a^2 - r_o a - r_o^2\right)}$$

The force, F, is

$$F = 95{,}000 - 55{,}115 = 39{,}885 \text{ lbs}$$

With a = 34" and r_o = 11.5"

$$q = \frac{3(39{,}885)}{\pi(2(34)^2 - 11.5(34) - (11.5)^2)} = 0.021 \text{ K/in}^2$$

With a = 34" and b = 11.5", b/a = 0.34 and a uniformly decreasing pressure load as shown in Case 3b, a K_{Mrb} of 0.076 can be interpolated. Thus the maximum moment can be calculated:

$$M_{rb} = K_{Mrb}\, q\, a^2 = 0.076\ (0.021)\ (34)^2 = 1.845 \text{ K-in/in}$$

Similarly, for the uniform pressure loading calculated above and using a K_m obtained from Case 3b for a b/a of 0.34:

$$M_{rb} = K_m q a^2 = 0.20(0.02)(34)^2 = 4.624 \text{ K-in/in}$$

The maximum moment is then:

$$M_T = 1.845 + 4.624 = 6.469 \text{ K-in/in}$$

The force on the weld is

$$F = M_T / d = 6.47 / 2" = 3.24 \text{ K/in}$$

The allowable weld stress (using stainless steel allowables) = 0.5 S_m = 0.5 (18.7 Ksi) = 9.35 Ksi

Weld throat required is 3.35 K/in / 9.35 Ksi = 0.35"

Since the minimum weld leg is 0.38" as shown below, the weld is adequate.

[redacted]

2. Vertical Drop Condition (level D)

Weld stress based on stress contour plots shown in Section 4.1.5 of the previous calculation [34] due to vertical bottom drop and scaling up to reflect the current increase in gross weight:

$$S.I. = 13.25 \times 1.1 = 14.58 \text{ Ksi}$$

$$\text{Allowable S.I.} = \text{Smaller of } 1.2\ S_m \text{ or } 0.35\ S_u$$

Using Stainless Steel allowables (18.7 Ksi and 64.4 Ksi) the minimum allowable S.I. = 22.4 Ksi. Therefore the weld stresses are well within allowables.

Check weld at Cask Inner Shell Plate/ Top Flange Ring:

[redacted]

Weld stress is based on stress contour plots due to vertical bottom drop (Section 4.1.5, [34]):

$$S.I. = 11.0 \times 1.1 = 12.1 \text{ Ksi}$$

$$\text{Shear Force} = 12.1 \text{ Ksi} \times (3/4")(1") = 9.08^K \text{ per inch of weld}$$

$$T_{weld} = 0.75" - 0.0675" = 0.6875"$$

$$f_v = \frac{9.08^K}{0.707(0.6875")(1")} = 18.67 \text{ Ksi}$$

The allowable weld stress = $1.2\ S_m$

$$= 22.4 \text{ Ksi} > 18.67 \text{ Ksi}$$

Thus the existing cover fillet is OK.

Check weld at Cask Inner Shell/Bottom Flange Ring:

Full penetration weld, therefore OK.

4.1.9 Tornado Stresses

1. Approach

The characteristics of the Design Basis Tornado (DBT) are obtained from Table 1 of the Regulatory Guide 1.76 for Region 1 [23].

A.	Maximum wind speed	= 360 mph [10, 4]
B.	Maximum rotational speed	= 290 mph
C.	Maximum translational speed	= 70 mph
D.	Minimum translational speed	= 5 mph
E.	Radius of maximum rotational speed	= 150 ft
F.	Pressure Drop	= 3.0 psi
G.	Rate of Pressure Drop	= 2.0 psi/sec

In addition, the maximum wind pressure load will be 397 psi [10, 4]. The maximum velocity pressure q_z based upon the maximum tornado velocity, V, was calculated using the relationship given in ANSI A58.1 – 1982 Section 6.5 [24].

$$q_z = 0.00256\ K_z(IV)^2$$

where:
V = Wind Speed
I = Importance Factor [4]
K_z = Coefficient [4]

In addition, per NUREG-0800, Paragraph 3.5.1.4 [25], three types of tornado missiles are postulated to strike the cask at 35% of the maximum horizontal wind speed of the DBT.

1. Massive Missile

A massive high kinetic energy missile which deforms on impact. This missile is assumed to be a 3967 pound (1800Kg) automobile with a frontal area of 20 square feet impacting the cask at a velocity of 126 mph.

2. Penetration Resistance Missile

A rigid missile to test penetration resistance, this missile is assumed to be a 276 pound (125 Kg), 8-inch diameter hardened steel object impacting on the cask at normal incidence.

3. Protective Barrier Missile

A small rigid missile of a size sufficient to just pass through any opening in protective barriers. This missile is assumed to be a 0.15 pound (0.067 Kg), 1-inch diameter, solid sphere impacting on the cask in the most damaging direction.

- For the cask, item 3) above is bounded by item 2) and therefore only item 2) will be evaluated for penetration resistance and also for stresses. Item 1) will be evaluated for stability and for stresses.
- The analysis presented in this package will only consider the case when the cask is mounted in a horizontal position. The case when the cask is in a vertical position is not plausible cause since this only happens in the fuel pool building where the cask is protected from DBT effects.
- The following analysis will be performed for the cask and components,
  - a) Stability
  - b) Penetration Analysis
  - c) Stress Analysis
- It will be assumed that the neutron shield is lost in the event of a DBT. Hence, the neutron shield is not considered in the analysis.

2. DBT Wind Pressure Loads

a. Stability Analysis:

The geometry considered for the analysis is shown below.

[redacted]

Wt of the Cask	=	215.0^K	Section 2.3
Wt of the Skid	=	18.7^K	[28]
Wt of the Trailer	=	44.7^K	[28]
Total Weight	=	278.4^K	

Area of Cask	=	15.5' x 89"/12 =	115 ft^2	
Area of Skid	=	15.5' x 14.7/12	=	19.0 ft^2
Area of Trailer	=	262/12 x 43/12	=	78.2 ft^2
		Total Area	=	212.2 ft^2

$$q_z = 0.00256\, K_z (IV)^2$$

where:

$V = 360$ mph

$I = 1.07$

$K_z = 0.8$

$$q_z = 0.00256\,(0.8)(1.07 \times 360)^2$$
$$= 303.9 \text{ psf} \quad < \quad 397 \text{ psf}$$

overturning moment = 212.2 x 397/1000 x 73.4/12 = 515.3 K-ft

restoring moment = 278.4 x 71.9/12 = 1668.0 K-ft

Factor of Safety against overturning = 1668.0/515.3 = 3.23

b. Stress Analysis

Cask Shell

Assume cask is simply supported and subjected to a uniform load P over entire length.
Use case 9c, Table 31 of Roark & Young [22]

Total Force, $P = 397/1000 \times 15.5 \times 89''/12 = 45.64^K$
Distributed Wind Load, $p = 45.64^K / 186'' = 0.245$ K/in

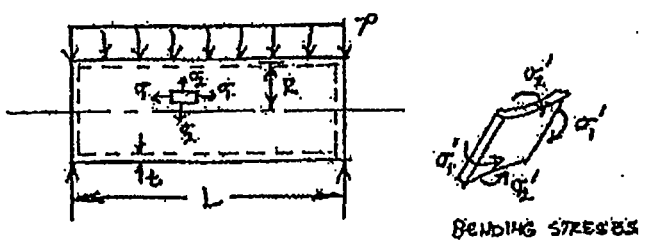

At top center,

$$\text{Max } \sigma_2 = -0.492\, B\, p\, R^{3/4} L^{-1/2} t^{-5/4}$$
$$\text{Max } \sigma_2' = -1.217\, B^{-1} p\, R^{1/4} L^{1/2} t^{-7/4}$$
$$\text{Max } \sigma_1 = -0.1188\, B^3\, p\, R^{1/4} L^{1/2} t^{-7/4}$$

Where: $B = [12(1 - \upsilon^2)]^{1/8}$

σ_1 and σ_2 = meridional and circumferential membrane stresses

σ_1' and σ_2' = meridional and circumferential bending stresses

Substituting:

$$B = [12(1 - \upsilon^2)]^{1/8} = [12(1 - 0.3^2)]^{1/8} = 1.348$$

$$\sigma_2 = -0.492\,(1.348)\,(0.245)\,(39.5)^{3/4}\,(186)^{-1/2}\,(1.5)^{-5/4} = 0.113 \text{ Ksi}$$

$$\sigma_2' = -1.217\,(1.348)^{-1}\,(0.245)(39.5)^{1/4}\,(186)^{1/2}\,(1.5)^{-7/4} = 3.72 \text{ Ksi}$$

$$\sigma_1 = -0.1188\,(1.348)^3\,(0.245p)\,(39.5)^{1/4}\,(186)^{1/2}\,(1.5)^{-7/4} = 1.20 \text{ Ksi}$$

- Primary Membrane

$$S.I. = \frac{1}{2}\left[(\sigma_1 + \sigma_2) \pm \left((\sigma_1 - \sigma_2)^2 + 4\tau^2\right)^{1/2}\right] = 1.20 \text{ Ksi}$$

- Membrane + Bending

$$S.I = \sigma_2 + \sigma_2' = 0.113 + 3.72 = 3.83 \text{ Ksi}$$

<u>Top Cover Plate</u>

Assume plate is simply supported at edges.

Use case 10a, Page 363, Table 24 of Roark & Young [22]

$$M_o = \frac{qa^2(3+\upsilon)}{16}$$

$$= \frac{0.397}{144}\frac{36.6^2(3+0.3)}{16}$$

$$= 0.76\ \text{K}-\text{in}$$

$$\sigma = \frac{6M}{t^2} = \frac{6(0.76)}{3.0^2} = 0.51\ \text{Ksi}$$

Inner Bottom Cover Plate

Assume plate is fixed at edges

Use case 10a, Table 24 of Roark & Young [22]

$$M_o = \frac{qa^2(1+\upsilon)}{16}$$

$$= \frac{0.397}{144}\frac{34^2(1+0.3)}{16}$$

$$= 0.259\ \text{K}-\text{in}$$

$$\sigma = \frac{6M}{t^2} = \frac{6(0.259)}{2^2} = 0.39\ \text{Ksi}$$

3. TGM Loading (Massive Missile Impact)

a. Stability Analysis:

Analyzed for the most critical impact which occurs when the missile hits the cask on the side. Assume the missile hits the topmost part of the cask as shown. From the conservation of momentum:

$(H_i)_o = (H_a)_o$

where:

$(H_i)_o$ = angular momentum about point o before impact

$(H_a)_o$ = angular momentum about point o after impact

$(H_i)_o = R_1 V_i m_m$

$(H_a)_o = R_1^2 \omega_1 m_m + (I_c)_o \omega_1$

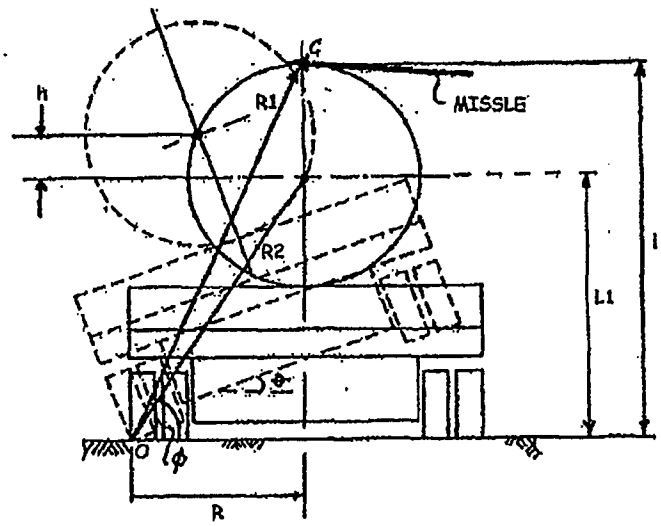

where

R_1 = distance from point o to the impact point c

V_i = impact velocity of missile

m_m = mass of the missile

ω_1 = angular velocity of the missile about point o immediately after impact

$(I_c)_o$ = mass moment of inertia of the cask about an axis through point o

Therefore:

$$R_1 V_i m_m = R_1^2 \omega_1 m_m + (I_c)_o \omega_1$$

$$\omega_1 = \frac{R_1 V_i m_m}{R_1^2 m_m + (I_c)_o}$$

From the conservation of energy:

$$KE_i + PE_i = KE_f + PE_f$$

Where KE_i = initial kinetic energy of the cask and the missile

$$= \frac{(I_c)_o \omega_i^2}{2} + \frac{R_1^2 \omega_i^2 m_m}{2}$$

and KE_f = final kinetic energy of the cask and the missile

$$= \frac{(I_o)_o \omega_f^2}{2} + \frac{R_1^2 \omega_f^2 m_m}{2}$$

(PE) = initial potential energy of the cask and missile = 0

(PE) = final potential energy of the cask and missile = $W_c h + 0$

W_o = weight of the cask

W_m = weight of missile

h = change in height of the C.G. during impact

W_{cst} = weight of cask / skid / trailer arrangement

$$\frac{(I_o)_o \omega_i^2}{2} + \frac{R_1^2 \omega_i^2 m_m}{2} = W_o h + \frac{(I_o)_o \omega_f^2}{2} + \frac{R_1^2 \omega_f^2 m_m}{2}$$

$$\omega_f^2 = \frac{\left((I_o)_o + R_1^2 m_m\right)\omega_i^2 - 2W_o h}{(I_o)_o + R_1^2 m_m}$$

From geometry of the figure shown above,

$$h = R_1\left(\sin(\phi + \theta) - \sin\phi\right)$$

Hence,

$$\omega_f^2 = \frac{\dfrac{R_1{}^2 V_i{}^2 m_m{}^2}{(I_o)_o + R_1^2 m_m} - 2W_o R_2\left(\sin(\phi + \theta) - \sin\phi\right)}{(I_o)_o + R_1^2 m_m}$$

The cask stops rotating when angular velocity, $\omega_f = 0$. Also, $\sin(\phi+\theta) = \sin\phi \cos\theta + \sin\theta \cos\phi$.

Therefore,

$$\sin\phi \cos\theta + \sin\theta \cos\phi = \frac{R_1^2 \omega_i^2 m_m}{2W_{cst} R_2 [(I_o)_o + R_1^2 m_m]} + \sin\phi$$

In order to determine θ from the following equation, the following parameters are used:

W_m= 3967lb [10]

W_{cst}= 278,400lb (2a) previously

M_m=3967/32.2 = 123.2 lb-m

V_i= 126 mph = 184.8 ft/sec

L = 43" +14.7" + 89" = 146.7" = 12.2 ft

L_1= 43" + 14.7" +89/2 = 102.2" = 8.5 ft

R = 6.0 ft

R_1 = 13.6 ft

R_2 = 10.4 ft

$\phi = 54.8°$

$\sin\phi = 0.817$

$\cos\phi = 0.576$

$(I_c)_o = (I_o)_g + M_o d_o^2$ where d_o is the same as R_2

$(I_c)_g = ½\, m_c R_c^2$

m_{cst} = 278,400 / 32.2 = 8,646.0 lb-m

R_c = cask radius

R_c = 44.5" = 3.71 ft

Therefore:

$(I_o)_g = ½\,(8646.0)(3.71)^2 = 59{,}502$ ft²lb-m

$m_{cst} d_o^2 = 8646.0(10.4)^2 = 935{,}151$ ft²lb-m

$(I_c)_o = 994{,}653\ ft^2 lb\text{-}m$

Substituting:

$$0.817\cos\theta + 0.576\sin\theta = \frac{13.3^2 184.8^2 123.2^2}{2(278{,}400)(10.4)[994{,}653 + 13.6^2(123.2)]} + 0.817$$

Simplifying:

$$0.817\cos\theta + 0.576\sin\theta = 0.016 + 0.817 = 0.833$$

Solving:

$$\theta = 1.7°$$

This is the angle at which the cask stops rotating.

The minimum angle for tip-over of the cask occurs when the c.g. is directly above the point of rotation.

$$\theta_{tip} = 90° - \phi = 90° - 54.8° = 35.2°$$

Since θ_{tip} is greater than θ, tip-over of the cask will not occur.

b. Stress Analysis

Analysis is performed separately for the cask shell and the cover plates.

Cask Shell:

The impact force is calculated by determining the force to maintain the cask in equilibrium at the angle of rotation. This force is multiplied by a dynamic load factor of 2 to determine the statically applied force

$$W_{cst} R_2 \cos(\phi + \theta) = F_1' R_2 \sin(\phi + \theta)$$

$$F_1' = W_{cst} \cot(\phi + \theta)$$

$$\phi + \theta = 54.8° + 1.7° = 56.5°$$

$$F_1' = 278.4 \cot(56.5) = 184.3 \text{Kips}$$

$$F = 2 \times F_1' = 368.6 \text{Kips}$$

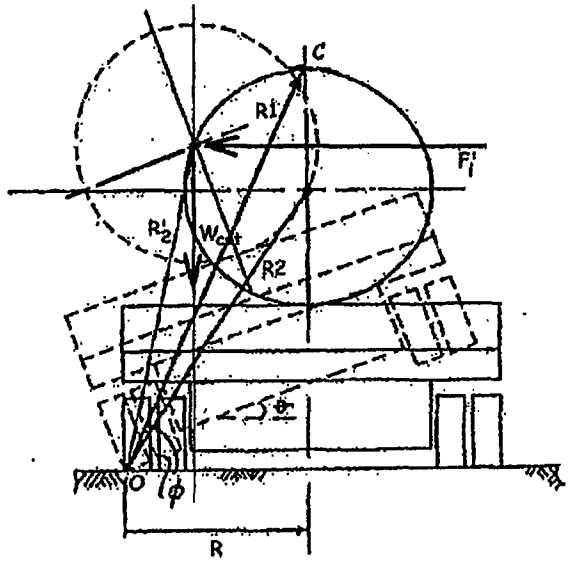

To determine stresses on the cask shell due to this force, use a similar approach to that used for previous DBT wind pressure analysis.

$$p = \frac{P}{L} = \frac{368.6}{186} = 1.982 \text{K/in}$$

The ratio between p for the DBT and the TGM:

$$\text{RATIO} = \frac{1.982}{0.245} = 8.09$$

Ratio all stresses from DBT wind pressure analyses by 8.09.

$\sigma_2 = 0.113 \times 8.09 = 0.914$ Ksi

$\sigma_2' = 3.72 \times 8.09 = 30.09$ Ksi

$\sigma_2 + \sigma_2' = 31.00$ Ksi

$\sigma_1 = 1.20 \times 8.09 = 9.71$ Ksi

Primary Membrane S.I. = σ_1 = 9.71 Ksi

Membrane + Bending S.I. = $\sigma_2 + \sigma_2'$ = 31.0 Ksi

Cover Plates

It is to be expected if the missile hits the cover plates, tip-over will be bounded by the case where the missile hits the cask side. However, some sliding is likely to occur.

The force on the cover plates will be calculated based on the assumption that the cask/skid/trailer arrangement will slide.

Let V = velocity (in/sec)
m = mass (lb-m)
W = weight (lb-f)

Note: The subscripts "m" and "cst" refer to "missile" and "cask/skid/trailer" arrangement respectively.

Using conservation of momentum:

$m_m V_m = m_{cst} V_{cst}$
$V_{cst} = m_m V_m / W_{cst} = 3967 \times 2218 / 278{,}400 = 31.6$ in/sec

The sliding distance is determined by equation the kinetic energy to the work done during sliding.

KE = Work = F d
$\frac{1}{2} M_{cst} V_{cst}^2 = W_{cst}\ x$

where x = sliding distance of the "cask/skid/trailer" arrangement

Solving for x:
$x = (1/2\ M_{cst} V_{cst}^2) / W_{cst}$

$= (1/2\ (W_{cst}/g)V_{cst}^2) / W_{cst}$

$= ½\ V_{cst}^2/g = ½\ (31.6)^2 / 386 = 1.29$ in.

Assuming constant acceleration of the "cask / skid / trailer" arrangement during sliding, the time for sliding can be calculated as:

$$T = 2\,x / V_{cst} = 2\,(1.29) / 31.6 = 0.0816 \text{ sec}$$

Acceleration, $\ddot{x}$, is given by

$$\ddot{x} = \frac{V_{cst}}{t} = \frac{31.6}{0.0816} = 387 \text{ in/sec}^2 , \quad \text{or } 1g$$

The impact force, F_I, is the force needed to overcome both the frictional force, F_f, and the inertia forces.

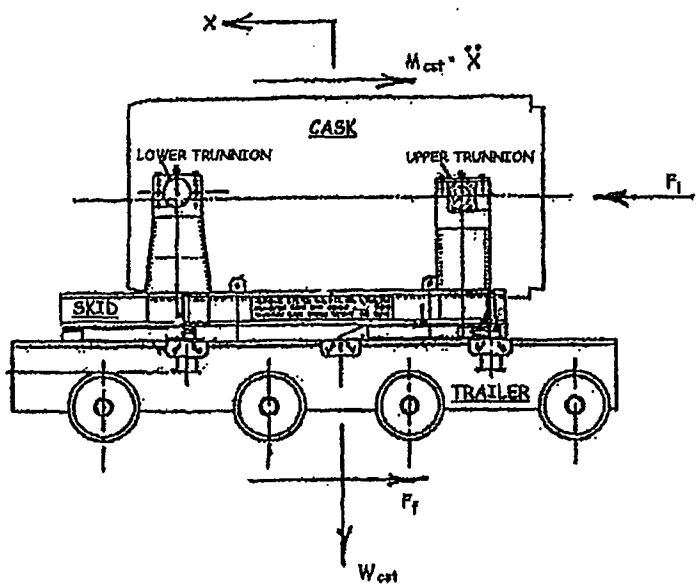

$$\sum F_x = 0 \quad \Rightarrow \quad F_I = F_f + M_{cst}\ddot{x}$$

Using the maximum possible value for the coefficient of friction, 1.0,

$$F_f = \mu W_{cst} = 278.4^K$$

Therefore, $F_I = 278.4 + (278.4 / g)\, g = 557^K$

Top Cover Plate, 3" thick.

Assume Plate is simply supported at edges

Assume force is uniformly distributed over entire plate surface since frontal area of the massive missile is assumed to be 20 sq. ft. and the 73.12"Ø plate area is 29.16 sq. ft.

Use case 10a, Table 24 of Roark & Young [22]

$$M_o = \frac{qa^2(3+\upsilon)}{16}$$

$$= \frac{P}{\pi a^2}\frac{a^2(3+\upsilon)}{16} = \frac{P(3+\upsilon)}{16\pi}$$

$$\sigma = \frac{6M}{t^2} = \frac{6P(3+\upsilon)}{16\pi t^2} = \frac{3}{8}\frac{557(3+0.3)}{\pi(3.0)^2} = 24.4 \text{ Ksi}$$

Inner Bottom Cover Plate, 2" thick.

Assume plate is fixed at edges

Assume force is uniformly distributed (See above)

Use case 10b, Table 24, Roark & Young [22]

$$M_o = \frac{qa^2(1+\upsilon)}{16}$$

$$\sigma = \frac{6M}{t^2} = \frac{6P}{\pi a^2}\frac{a^2(1.0+\upsilon)}{16t^2} = \frac{3}{8}\frac{P(1.0+\upsilon)}{\pi t^2} = \frac{3}{8}\frac{557(1.3)}{\pi(2.0)^2} = 21.6 \text{ Ksi}$$

4. Penetration Resistance Missile

a. Penetration Analysis

Two (2) formulas are used to determine penetration distance
Assume 276 lbs, 8"∅, rigid missile
Velocity = 126 mph = 184.8 ft/s = 2218 in/s

(1) The minimum required thickness for puncture resistance is that given by Nelms [26]:

$$T = \left[\frac{KE}{2.4 S_u D^{1.6}}\right]^{0.71}$$

where KE = kinetic energy = ½ mV^2
m = mass of missile = 276 / g = 0.715 lb sec^2/ in
V = velocity of missile = 2218 in / s
S_u = ultimate strength of cask material = 70 Ksi
D = diameter of missile = 8.0"

$$T = \left[\frac{mV^2}{4.8\, S_u D^{1.6}}\right]^{0.71}$$

$$= \left[\frac{0.715\,(2218)^2}{4.8\,(70{,}000)(8.0)^{1.6}}\right]^{0.71} = 0.499"$$

Thickness of the cask shell = 1.5"
Thickness of the top cover plate = 3.0"
Thickness of the inner bottom cover plate = 2.0"

Since the thickness of the cask exceeds the minimum thickness required for penetration resistance for all components, the containment will not be penetrated.

(2) As an alternate method, use the formula developed by the Ballistic Research Laboratory [27]:

$$T = \frac{KE^{2/3}}{672D}$$

where KE = kinetic energy = ½ mV^2
m = mass of missile = 8.57 lb sec^2 / ft
V = velocity of missile = 184.8 ft / sec
D = diameter of missile = 8.0"

$$T = \frac{1/2\,(8.57)(184.8)^{2/3}}{672(8.0)} = 0.52"$$

Both methods used to calculate penetration resistance produce consistent results. Thus, the cask will not be penetrated by the missiles specified in NUREG 0800.

b. Stress Analysis

Impact force, F, is calculated from the following relation:

$$F\,\Delta t = G_{final} - G_{initial}$$

Where Δt = time of contact (assumed to be 0.05 sec [26])
G_{final} = linear momentum at the time $t = t_f = mV_f$
$G_{initial}$ = linear momentum at time $t = t_I = mV_I$
V = velocity
m = mass

Then

$$F = \frac{m(V_i - V_f)}{t_f - t_i} = \frac{m(V_i - V_f)}{\Delta t}$$

Assume $V_f = 0$

$$F = \frac{m(V_i)}{\Delta t} = \frac{\left(\frac{276}{386}2218\right)}{0.05} = 31.7^K$$

Using a maximum dynamic load factor of 2.0 makes the impact force, $F = 63.4^K$.

Cask Shell

Use correlation from Roark & Young [22], Table 31, Case 9.

For a cylindrical shell with closed ends and end supports with a radial load, P, uniformly distributed over a small area, A, near midspan, the following applies

$$R / t = 39.5" / 1.5" = 26.33$$

$$A / R^2 = \pi(8^2/4) / 39.5^2 = 0.0322$$

From the formula table, (linearly interpolating),

$$\sigma_2'(t^2/P) = 0.83, \quad \sigma_2(Rt/P) = 4.24$$

Solving,

$$\sigma_2' = 0.83(63.4)/1.5^2 = 23.4 \text{ Ksi}$$

$$\sigma_2 = 4.24(63.4)/(39.5)1.5 = 4.5 \text{ Ksi}$$

$$\sigma_2 + \sigma_2' = 23.4 + 4.5 = 27.9 \text{ Ksi}$$

Top Cover Plate

Assume simply supported boundary conditions at the edges, apply Case 16, Table 24 of Roark and Young [22]

$$M_{max} = \frac{W}{4\pi}\left[(1+\upsilon)\ln\left(\frac{a}{r_0'}\right)+1\right]$$

where: a = plate radius = 36.6"

r_0 = missile radius = 4.0"

ν = Poisson's ratio = 0.3

W = impact load = 63.4^K

$$M_{max} = \frac{63.4}{4\pi}\left[(1+0.3)\ln\left(\frac{36.6}{4}\right)+1\right] = 19.6\ K-in/in$$

$$\sigma = \frac{6M}{t^2} = \frac{6\,(19.6)}{3.0^2} = 13.1 Ksi$$

Inner Bottom Cover Plate

Assume fixed boundary conditions at the edges, apply Case 17, Table 24 of Roark and Young [22]

$$M_{max} = \frac{W}{4\pi}\left[(1+\upsilon)\ln\left(\frac{a}{r_0'}\right)\right] = \frac{63.4}{4\pi}(1+0.3)\ln\left(\frac{34}{4}\right) = 14.0\ K-in/in$$

$$\sigma = \frac{6M}{t^2} = \frac{6\,(14.0)}{2.0^2} = 21.0\ Ksi$$

Table 4.1.9.1 Stress Intensity Results for Design Basis Tornado and Tornado Generated Missiles

Component	Stress Type	Element	Stress Intensities (Ksi)	
			DBT	TGM
Cask Structural Shell	P_m	------	1.20	9.71
	$P_l + P_b$	------	3.83	31.0
	$P_l + P_b + Q$	------	------	------
Cask Inner Shell	P_m	------	------	------
	$P_l + P_b$	------	------	------
	$P_l + P_b + Q$	------	------	------
Top Flange Ring	P_m	------	------	------
	$P_l + P_b$	------	------	------
	$P_l + P_b + Q$	------	------	------
Top 3" Cover Plate	P_m	------	------	------
	$P_l + P_b$	------	0.51	24.4
	$P_l + P_b + Q$	------	------	------
Bottom Support Ring	P_m	------	------	------
	$P_l + P_b$	------	------	------
	$P_l + P_b + Q$	------	------	------
Inner Bottom 2" Cover Plate	P_m	------	------	------
	$P_l + P_b$	------	0.39	21.6
	$P_l + P_b + Q$	------	------	------
Inner Bottom ¾" Cover Plate	P_m	------	------	------
	$P_l + P_b$	------	------	------
	$P_l + P_b + Q$	------	------	------

4.1.10 Velocity Resulting in Massive Impact Load

This section calculates the required velocity of a loaded dry shielded canister (DSC) or transfer cask rolling into and HSM to create the same amount of kinetic energy as the HSM design basis maximum impact load. To do this, first the kinetic energy of the design basis load impacting the HSM is found. Then, this kinetic energy is used to find the corresponding velocity of the DSC and cask.

The design basis load is a 3967 lb automobile traveling at 126 mph (Table 3.2-1) [10]

$$\text{Kinetic energy, } T = \tfrac{1}{2} MV^2$$

$$T = \tfrac{1}{2}\,(3967 \text{ lb} / 32.2 \text{ ft/sec}^2)(126 \text{ mph} \times 1.466 \text{ ft/sec/mph})^2 = 2{,}101{,}770 \text{ ft lbs}$$

Find the velocity of a 95,000 lb loaded dry shielded canister that would result in the same kinetic energy as calculated above. Assume a homogenous cylinder:

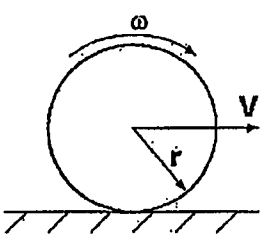

$$I = 1/2mr^2$$

$$\omega = V/r$$

$$T = 1/2mV^2 + 1/2I\omega^2$$

$$T = 1/2mV^2 + 1/2(1/2mr^2)\left(\frac{V}{r}\right)^2$$

$$T = 1/2mV^2 + 1/4mV^2$$

$$T = 3/4mV^2$$

Solving for V, and using the energy and weight given above:

$$V = \left(\frac{4T}{3m}\right)^{1/2} = \left(\frac{4}{3}\frac{2{,}101{,}770}{95{,}000/32.2}\right)^{1/2} = 30.8 \text{ ft/sec} \quad \text{or} \quad 21.1 \text{ mph}$$

2b) The velocity of the transfer cask loaded with the dry shielded canister using the same approach as was used for the loaded dry shielded canister:

Kinetic energy, $T = ½ mV^2 = 2{,}101{,}770$ ft lbs

Velocity of a 215,00 lb loaded transfer cask (cask docked at the HSM with a sealed DSC) that would result in the same kinetic energy

$$T = 1/2mV^2 + 1/2I\omega^2$$

$$T = 1/2mV^2 + 1/2(1/2mr^2)\left(\frac{V}{r}\right)^2$$

$$T = 1/2mV^2 + 1/4mV^2$$

$$T = 3/4mV^2$$

Solving for V, and using the energy and weight given above:

$$V = \left(\frac{4T}{3m}\right)^{1/2} = \left[\left(\frac{4}{3}\right)\left(\frac{2{,}101{,}770}{215{,}000/32.2}\right)\right]^{1/2} = 20.5 \text{ ft/sec} \quad \text{or} \quad 14.0 \text{ mph}$$

Calculate the velocity of dropping 80" per Topical Report, Section 8.2 [10].

$d = ½ q t^2$

$t = (2 d/q)^{1/2} = [2 (80/12)/32.2]^{1/2} = 0.643$ sec

$\Delta t = V/32.2 = 0.643$

$V = 20.7$ ft / sec, essentially equal to 20.5 ft / sec

Therefore, on a flat road, a speed of 20.5 ft / sec is not credible.

4.2 Neutron Shield Analysis

This calculation determines the pressure rating for the Transfer Cask Neutron Shield Panel.

Hand calculations based on ASME code [9]. Allowables for cylindrical shells are used to determine the allowable internal pressure of the neutron shield panel. The neutron shield is assumed to be lost in the event of an accident condition; therefore, the neutron shield panel will only be analyzed for normal operating and off-normal conditions (Levels A&B).

In addition, neutron shield panel local shell stresses at trunnions will be checked along with the NSP support rings.

Materials:

Neutron Shield Panel: ATSM A 240, Type 304

NSP Support Angle: ASTM A 240, Type 304

Assumptions:

1. Material allowables are based on a design temperature of 400 °F.
2. Buckling of the neutron shield panel will not occur since the load due to the external pressure will be transferred from the neutron shield panel to the cask structural shell by the solid neutron shield.

Check Neutron Shield Panel Internal Pressure:

Allowable internal pressure is given by [9], NC – 3324.3:

a.) Circumferential

$$P = \frac{St}{R + 0.6t}$$

where S = maximum allowable stress value, psi

R = inside radius of shell course

t = minimum required shell thickness

Based on ASME, Section II, Part D, Subpart 1 [14]:

S = 16.2 Ksi (for SA240, Type 304 @ 400°F

Substituting values:

$$P = \frac{16.2\,(0.25)}{44.25 + 0.6(0.25)} = 0.0912\,\text{Ksi} = 91.2\,\text{psi}$$

[redacted]

b.) Longitudinal

$$P_{allow} = \frac{2St}{R - 0.4t} = \frac{2(16.2)(0.25)}{44.25 - 0.4(0.25)} = 0.1835\,\text{Ksi} = 183.5\,\text{psi}$$

The governing allowable internal pressure of the cask neutron shield panel is 91.2 psi. The neutron shield panel pressure relief valve is set to a maximum of 95 psi [6] (to relieve the internal pressure due to off-gassing of the NS3 neutron shielding material) which will result in minor overstressing of the neutron shield panel at the design temperature of 400 °F. At the normal operation temperature of 247 °F [4, Table 8.1-14]

$$S = 17.2\,\text{Ksi} \quad [14]$$

$$P_{allow} = \frac{17.2(0.25)1000}{44.25 + 0.6(0.25)} = 96.8\,\text{psi} > 95\,\text{psi}$$

Check Bottom End Plate Bending Due To Pressure in Bottom Neutron Shield:

The bottom end NS-3 ¾ " thick annular plate is checked for bending due to pressure in the neutron shield cavity.

From Roark and Young [22], Table 24, Case 2c, assuming simply supported boundary conditions on the inner and outer edges:

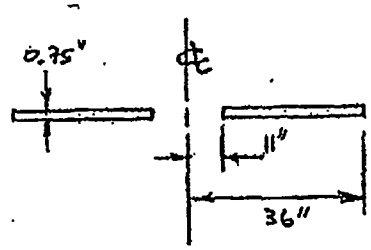

$a = 36"$, $b = 11"$, $t = 0.75"$

$b/a = 0.31$ giving $K_{m,\,max} = 0.0539$

For SA 240, Type 304:

$$S_m = 18.7\,\text{Ksi} \text{ @ } 400\,°\text{F} \quad \text{(Table 2.2.1a)}$$

Allowable $P_L + P_B = 1.8\ S_m$ (Table 3.2, Service Level C)

$$\sigma_{allow} = 1.8\ S_m = 1.8\ (18.7) = 33.66 \text{ Ksi}$$

$$\sigma_{allow} = 6M_{allow} / t^2$$

Solving for M_{allow} and substituting:

$$M_{allow} = 33.66\ (0.75)^2 / 6 = 3.156 \text{ K-in/in}$$

$$M_{max} = K_{m,max}\ q\ a^2$$

Soving for q and substituting:

$$Q = 3.156 \text{ K-in/in} / [0.0539)(36)^2] = 45.2 \text{ psi}$$

The bottom neutron shield pressure relief valve is set to a maximum of 45 psi [6] to prevent overstressing of the cask bottom end plate.

Neutron Shield Panel Local Shell Stresses at Trunnions

The stress at the trunnion/cask shell intersections was conservatively calculated based on the assumption that the total load is carried by the insert plate / structural shell. The neutron shield panel will carry a portion of the trunnion load proportional to the structural shell. The relative stiffness of the shells are proportional to t^3.

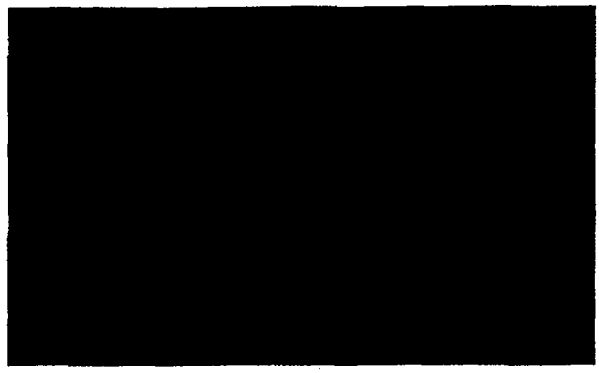

UPPER TRUNNION SECTION

Maximum stress in the cask structural shell at the upper trunnion/cask shell intersection:

S.I. = 30.5 Ksi (see Table 4.1.3.1)

Therefore the local stress at the trunnion/neutron shield panel intersection due to trunnion loads is:

$$S.I. = (30.5\ Ksi)(0.25)^3 / (1.5)^3 = 0.14\ Ksi$$

Thermal stress at the trunnion / cask shell intersection is:

S.I. = 25.0 Ksi (Based on contour plot, Section 4.1.2 of [34])

Total Stress = 25.0 + 0.14 = 25.14 Ksi $< 3.0\ S_m = 56.1$ Ksi

Check Neutron Shield Longitudinal Supports:

Since the neutron shield jacket weld is a full penetration weld, the load due to the internal pressure will be carried entirely by the neutron shield panel. Therefore, the longitudinal supports will not be analyzed for internal pressure loading. Since the NS3 solid neutron shield will resist compressive loads, the loads due to vertical and horizontal handling conditions will be carried by the cask structural shell. Loads on the neutron shield panel due to axial accelerations will be supported by the neutron shield panel support rings as shown below.

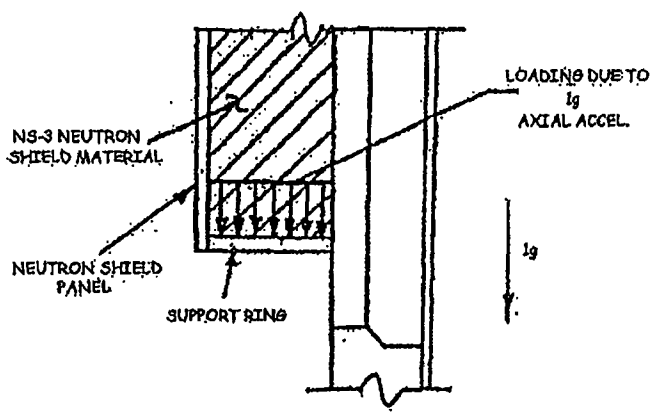

- Check Neutron Shield Panel (NSP) Support Ring:

The loading on the support ring is due to 1g acceleration of the NS3 material and the neutron shield panel. The maximum stress intensity in the neutron shield panel support ring due to the vertical bottom drop condition is:

S.I. = 26.2 Ksi (based on stress results in section 4.1.5: Bot ring, Bot drop; Top ring, Top drop)

Ratioing the maximum S.I. by 2g / 75g, the maximum S.I. in the neutron shield support ring is:

S.I. = 26.2 Ksi (2/75) = 0.70 Ksi

Allowable S.I. = 3.0 S_m = 3.0(18.7 Ksi) = 56.1 Ksi

Therefore, OK

Maximum thermal stress intensity:

S.I. = 14.5 Ksi (Based on contour plot, Section 4.1.2 of [34])

Normal Stress on NSP Support Ring:

Total Stress = 0.70 + 14.5 = 15.2 Ksi < 56.1 Ksi OK

Check Weld at Neutron Shield Panel Support Ring/Bottom Flange Ring:

The maximum shear stress for level A and B loading is taken as the stresses resulting from the 75g vertical bottom drop case x (2/75).

S.I. = 26.2 Ksi (based on the stress results given in Section 4.1.5 [34])

Shear stress @ weld = 26.2 Ksi (2g/75g) = 0.70 Ksi

Primary allowable weld stress = 0.5 S_m = 0.5 (18.7) = 9.35 Ksi

$F_v = A_{weld}\ \sigma_{allow}$

For a unit length of weld:

Req'd weld throat = (0.70Ksi) (3/4") (1") / 9.35 Ksi = 0.06"

The existing throat provided from a 5/16 " fillet weld on both sides all around:

Existing throat = 2(0.707) (5/16 ") = 0.44" > 0.06" OK

(See dwg BGE-01-3002, 84-025-E, [6])

[redacted]

¼" Fillet Weld at Neutron Shield Panel/NSP Support Ring

The weld forces will be insignificant since the loads on the neutron shield panel are transmitted to the cask structural shell by the NS3 neutron shield material. Therefore, the weld is ok.

4.3 Ram Access Ring Penetration Analysis

For stresses at the RAM access penetration ring, see the analysis results table and load combination results tables in section 5.0. These stresses were calculated in the dead weight, thermal, seismic, and drop sections of this package. Handling stresses are negligible.

4.4 Trunnion Analysis

The upper and lower trunnions are analyzed for 4 load conditions (3 handling and 1 transportation). The total design weight of the transfer cask lifting with and loaded DSC is 220,000 (actual weight is 217,685 lbs, Section 2.3). The total design weight of the cask lifting with the sealed DSC and transport mode is 215,000 (actual weight is 212,591 lbs).

The trunnions are analyzed using a combination of hand calculations and ANSYS Finite Element Models. All trunnion allowables are given in Table 3.2 of the calculation package. Allowables for the upper trunnions for critical lifts (handling cases 1, 2, and 3) are governed by ANSI N14.6. Lower support trunnions and upper lift trunnions for all remaining loads (transport case) are governed by the same ASME code criteria applied to the cask structural shell.

Materials:

Upper Trunnion:

Trunnion: SA 564, Gr. 630 PH

Sleeve: SA182 F304N

Shell Course: SA – 516, Gr. 70

Lower Trunnion:

Trunnion: SA 479, Type 304

Sleeve: SA182 F304N

Assumptions:

1. The trunnions are designed for a temperature of 400 °F [30].
2. ANSI N14.6 allowable stresses apply up to and including the weld of the trunion sleeve to the insert plate or cask shell.
3. ASME allowable stresses apply for all insert plate and cask shell stresses.

Design Loads:

The trunnions are designed based on the total design weight of the transfer cask lifting with water and loaded DSC is 220,000. The total design weight of the cask lifting with the sealed DSC and transport mode is 215,000. All handling conditions (cases 1, 2, and 3) include a 15% load increase for motion loads as required by CMAA #70. The handling loads are summarized below and on the following page.

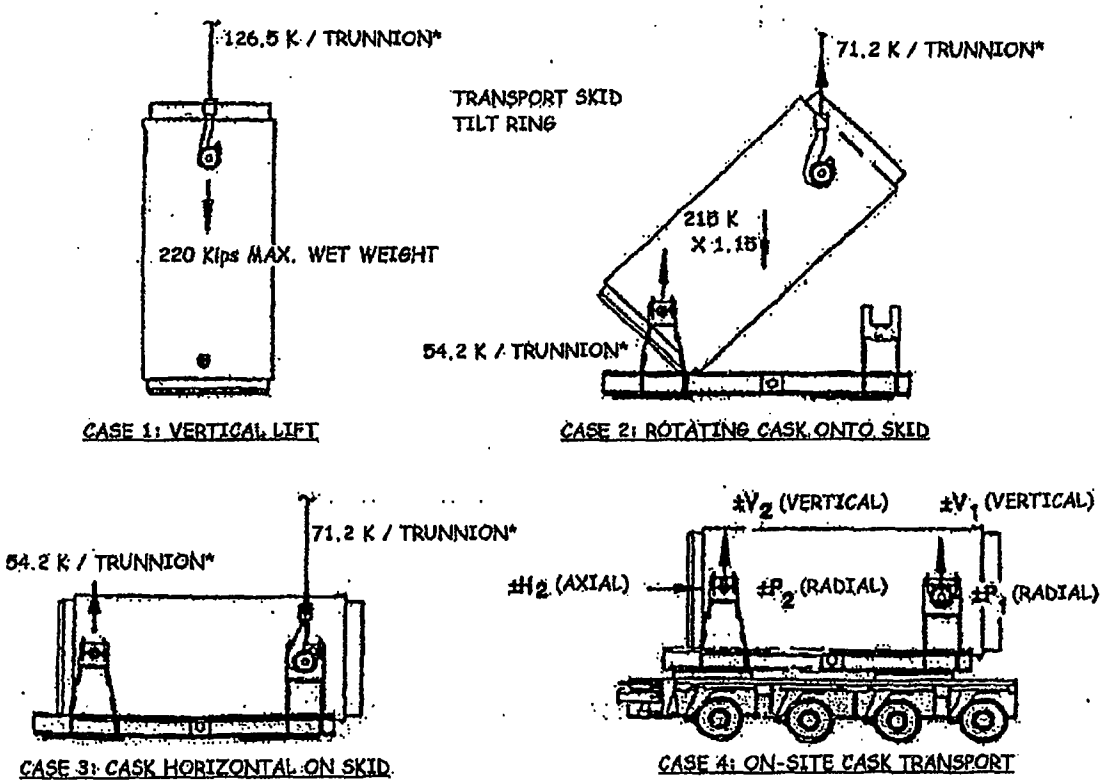

*INCLUDES 15% LOAD INCREASE FOR MOTION LOADS

Upper Trunnion Section [6]

[redacted]

Upper Trunnion Load Application Points

[redacted]

Lower Trunnion Section w/ Load Application Point [6]

[redacted]

1. Upper Trunnions:

Check Trunnion Body At Section A

Applied Loads:

There are no transportation loads applied at Section A other than the self weight of the trunnion body beyond Section A which is negligible.

The maximum handling load = 126.5^K

$V_A = 126.5$

$M_A = 126.5 \times 1.75" = 221.4$ K-in.

Section A Properties:

O.D. of Trunnion = 8"

I.D. of Trunnion = 4"

Material : SA564 Gr 630 PH

Area = $\pi(D_o^2 - D_i^2)/4 = \pi(8^2 - 4^2)/4 = 37.7$ in^2

Section modulus, $S = \pi(D_o^4 - D_i^4)/(32D_o) = \pi(8^4 - 4^4)/(32*8) = 47.1$ in^3

Stresses:

Shear stress, $\sigma_v = 126.5/37.7 = 3.4$ Ksi

Allowable is $(0.6/10)S_u = 7.88$ Ksi $\Rightarrow$ OK

($S_u = 131.4$ ksi, Table 2.2.1b)

Bending stress, $\sigma_b = 221.4/47.1 = 4.7$ Ksi

S.I. = $4.7/2 + ((4.7/2)^2 + 3.4^2)^{1/2} = 6.5$ Ksi

Allowable is $S_u/10 = 13.1$ Ksi $\Rightarrow$ OK

Check Trunnion Body at Section B

Handling Loads:

$V_A = 126.5$

$M_A = 126.5 \times 5.5" = 695.8$ K-in. (governing)

Transportation Loads: (from Transfer Handling Conditions of Section 4.1.3)

$V_A = 119$

$M_A = 119 \times 2.13" = 253.5$ K-in.

Section B Properties:

O.D. of Trunnion = 12"

I.D. of Trunnion = 9"

Material : SA564 Gr 630 PH

Area $= \pi(D_o^2 - D_i^2)/4 = \pi(12^2 - 9^2)/4 = 49.5 \text{ in}^2$

Section modulus, $S = \pi(D_o^4 - D_i^4)/(32D_o) = \pi(12^4 - 9^4)/(32*12) = 116 \text{ in}^3$

Section B Stresses:

Shear stress, $\sigma_v = 126.5/49.5 = 2.6$ Ksi

Allowable is $(0.6/10)S_u = 7.88$ Ksi $\Rightarrow$ OK

Bending stress, $\sigma_b = 695.8/116 = 6.0$ Ksi

S.I. $= 6.0/2 + ((6.0/2)^2 + 2.6^2)^{1/2} = 7.0$ Ksi

Allowable is $S_u/10 = 13.1$ Ksi $\Rightarrow$ OK

Check "Sleeve Body" at Section C

Handling Loads:

$V_A = 126.5$

$M_A = 126.5 \times 9.75" = 1233.4$ K-in. (governing)

Transfer Loads:

The transfer load case stresses will conservatively be calculated using enveloping loads from the transport cases.

$V_{max} = 119$ (Case 4a)

P_{max} = Radial Load = 119 (Case 4b)

M_{max} = 119 x 6.38" = 759.2 K-in.

Section C Properties:

O.D. of Trunnion = 17"

I.D. of Trunnion = 12"

Material : SA182 F304N

Area = $\pi(D_o^2 - D_i^2)/4 = \pi(17^2 - 12^2)/4 = 113.9$ in^2

Section modulus, $S = \pi(D_o^4 - D_i^4)/(32D_o) = \pi(17^4 - 12^4)/(32*17) = 362.6$ in^3

Section C Stresses:

Shear stress, $\sigma_v = 126.5/113.9 = 1.11$ Ksi

Allowable is $(0.6/6)S_y = 2.3$ Ksi ⇒ OK

Bending stress, $\sigma_b = 1233.4/362.6 = 3.4$ Ksi

S.I. = $3.4/2 + ((3.4/2)^2 + 1.11^2)^{1/2} = 3.73$ Ksi

Allowable is $S_y/6 = 3.75$ Ksi ⇒ OK

Check Weld Stresses at Section B

Throat at failure plane 1 = $1.25(2)^{1/2} = 1.77$"

Throat at failure plane 2 = $(1.25^2 + 0.38^2)^{1/2} = 1.31$"

Section Loading:

$V = 126.5^K$

M = 126.5 x 5.5" = 695.8 K-in

Weld Properties:

Failure Plane 1:

$A = \pi dt = \pi(12 + 1.25)(1.77) = 73.7$ in^2

$S = \pi r^2 t = \pi(6.0 + 1.25/2)^2(1.77) = 244$ in^3

Failure Plane 2:

[redacted]

$A = \pi dt = \pi(12 + 0.38)(1.31) = 50.9\ in^2$

$S = \pi r^2 t = \pi(6.0 = 0.38/2)^2(1.31) = 157.7\ in^3$

Weld Stresses:

Stress (Ksi)	Failure Plane 1	Failure Plane 2
Shear	1.72	2.49
Bending	2.85	4.41
S. I.	3.66	5.53

Allowable for these welds assuming the weld material is the same as the base metal:

Allowable = S_u /10 = 7.3 Ksi ⇒ OK

<u>Check Weld Stresses at Section C</u>

Failure plane throats

1 = 2(1.25 /cos30°) = 2.89"

2 = $2(1.25^2 + 1/4^2)^{1/2}$ = 2.55"

3 = 2(1.25 + .25) = 3.00"

[redacted]

Section C Loading:

V = 126.5^K

M = 126.5 x 9.75"

= 1233.4 K-in

Weld Properties:

Failure Plane 1:

r = 7.25"

$A = 2\pi rt = 2\pi(7.25)(2.89) = 132\ in^2$

$S = \pi r^2 t = \pi(7.25)^2(2.89) = 477\ in^3$

Failure Plane 2:

$r = 7.25"$

$A = 2\pi rt = 2\pi(7.25)(2.55) = 116\ in^2$

$S = \pi r^2 t = \pi(7.25)^2(2.55) = 421\ in^3$

Failure Plane 3:

$r = 7.25"$

$A = 2\pi rt = 2\pi(7.25)(3.00) = 137\ in^2$

$S = \pi r^2 t = \pi(7.25)^2(3.00) = 495\ in^3$

Weld Stresses at Section C:

Stress (Ksi)	**Failure Plane**		
	1	**2**	**3**
Shear	0.96	1.09	0.92
Bending	2.59	2.93	2.49
S. I.	2.91	3.29	2.79

Allowable for these welds = S_u /10 = 7.32 Ksi ⇒ OK

2. Lower Trunnions: (Governed by the same ASME code criteria applied to the cask structural shell)

Check Trunnion Body/Sleeve Intersection

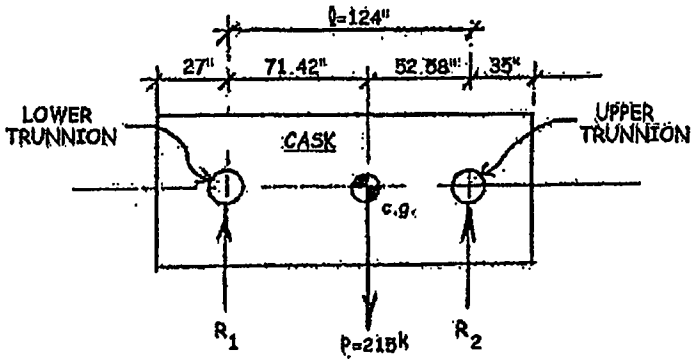

$R_1 = Pb/L = ½ (215(52.58)/124) = 45.6^K$ / trunnion x 1.15 = 52.4^K

$R_2 = Pa/L = ½ (215(71.42)/124) = 61.9^K$ / trunnion x 1.15 = 71.2^K

Section Properties:

O.D. of Trunnion = 12"

I.D. of Trunnion = 10"

Material : SA479 Type304

Area = $\pi(D_o^2 - D_i^2)/4 = \pi(12^2 - 10^2)/4 = 34.6$ in^2

Section modulus, $S = \pi(D_o^4 - D_i^4)/(32D_o) = \pi(12^4 - 10^4)/(32*12) = 87.8$ in^3

Section Stresses:

Shear stress, $\sigma_v = 52.4/34.6 = 1.51$ Ksi

Bending stress, $\sigma_b = 52.4(1.87)/ 87.8 = 1.11$ Ksi

S.I. = $1.11/2 + ((1.11/2)^2 + 1.51^2)^{1/2} = 2.2$ Ksi

Allowable is $1.5S_m = 28.1$ Ksi ⇒ OK

Check Trunnion Sleeve / Cask Shell Intersection Stresses

Applied Loads: 45.6^K at a moment arm of 6.37" (Load Case 2)

Section Properties:

O.D. = 14.5"

I.D. = 12"

Material: SA182 F304N

Area = $\pi(D_o^2 - D_i^2)/4 = \pi(14.5^2 - 12^2)/4 = 52.0$ in^2

Section modulus, $S = \pi(D_o^4 - D_i^4)/(32D_o) = \pi(14.5^4 - 12^4)/(32*14.5) = 158.9$ in^3

Section Stresses:

Shear stress, $\sigma_v = 52.4/52.0 = 1.01$ Ksi

Bending stress, $\sigma_b = 52.4(6.37)/158.9 = 2.10$ Ksi

S.I. = $2.1/2 = ((2.1/2)^2 + 1.01^2)^{1/2} = 2.51$ Ksi

Allowable is $1.5S_m = 30.5$ Ksi $\Rightarrow$ OK

Check Weld Stresses at Trunnion / Sleeve Intersection

Failure plane throats

$1 = 2^{1/2}(1/2) = 0.707"$

$2 = (1/4^2 + 1/2^2)^{1/2} = 0.559"$

$3 = ½" + ¼" = 0.75"$

[redacted]

Section Loading (Case 3):

$V = 52.4^K$

$M = 52.4 \times 1.87" = 97.99$ K-in

Weld Properties:

Failure Plane 1: $r = 6.25"$

$A = 2\pi rt = 2\pi(6.25)(0.707) = 27.8 \text{ in}^2$

$S = \pi r^2 t = \pi(6.25)^2(0.707) = 86.8 \text{ in}^3$

Failure Plane 2: $r = 6.125"$

$A = 2\pi rt = 2\pi(6.125)(0.559) = 21.5 \text{ in}^2$

$S = \pi r^2 t = \pi(6.125)^2(0.559) = 65.9 \text{ in}^3$

Failure Plane 3: $r = 6.00"$

$A = 2\pi rt = 2\pi(6.00)(0.75) = 28.3 \text{ in}^2$

$S = \pi r^2 t = \pi(6.00)^2(0.75) = 84.8 \text{ in}^3$

Weld Stresses:

Stress (Ksi)	Failure Plane		
	1	2	3
Shear	1.88	2.44	1.85
Bending	1.13	1.49	1.16
S. I.	2.53	3.30	2.52

Allowable for these welds = 0.5 S_m = 10.2 Ksi ⇒ OK

Check Weld Stresses at Trunnion Sleeve / Cask Shell Intersection

Failure Plane Throats

1. $= 2(1.25 + 0.25) = 3.0"$
2. $= 2(1.25^2 + 0.25^2)^{1/2} = 2.55"$
3. $= 2(1.25 / \cos 30°) = 2.89"$

Since the failure plane 2 has the smallest effective throat, this case will result in the highest weld stress. Thus, cases 1 and 3 need not be analyzed.

[redacted]

Section Loading

$V = 52.4^k$

$M = 52.4 \times 6.37" = 333.8$ K-in.

Section Properties:

(Failure plane 2)

$A = 2\pi rt = 2\pi(7.25)(2.55) = 116.2 \text{ in}^2$

$S = \pi r^2 t = \pi(7.25)^2(2.55) = 421.1 \text{ in}^3$

Material: SA182 F304N

Section Weld Stresses:

Shear stress, $\sigma_v = 52.4/116.2 = 0.45$ Ksi

Bending stress, $\sigma_b = 333.8 / 421.1 = 0.79$ Ksi

S.I. $= 0.70/2 + ((0.70/2)^2 + 0.4^2)^{1/2} = 0.92$ Ksi

Allowable is $0.5S_m = 10.2$ ⇒ OK

4.5 Cask Lid Lifting Bolts Analysis

1. Vertical Lift:

   The weight of the cask lid is supported by one bolt for the vertical lift.

   Bolt = 1" Eyebolt

2. Horizontal Lift:

   4 Bolts support the cask lid weight.

   Bolt = ¾" Eyebolt

Cask Lid weight:

Weight = 5290 lb [13] use 5300 lb

Bolt Capacities:

¾" Eyebolt No. 3026T16 = 6,500 Lbs/Bolt

1" Eyebolt No. 3026T18 = 13,000 Lbs/Bolt

Use lifting impact factor of 1.5.

Check Bolts:

Vertical Lift: 1.5 x 5300 = 7950 lbs < 13,000 lbs ⇒ OK

Horizontal Lift: 7950 lbs / 4 bolts = 1987.5 per bolt < 6500 lbs ⇒ OK

Check Weld at Standoff Rod / Top 3" Plate:

Using P = 7950 / 4 = 1987.5 lbs Say 2,000 lbs.

Normal load on weld = 2000 / (3.0 π)

= 212 lbs/in, tension

Max shear = 2000 / (3.0 π) = 212 lbs/in

Allowable weld stress = 0.5 S_m = 9.35 Ksi

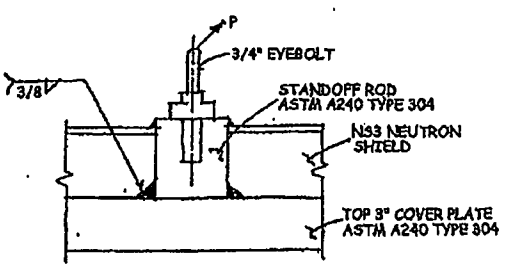

Required fillet weld is, therefore = 212 / 9350 = 0.02"

3/8" fillet all around is OK

4.6 Cask Head Bolt Analysis

Cask Head Bolt Loading:

The critical loading will occur during the cask top corner drop accident condition since the bolts will be loaded in tension due to the force of the DSC and in shear due to the forces transmitted through the cask lid.

Weight of DSC and Internals =	22,999 + 22,000 +46,400	= 91,399 lbs	Section 2.3
Weight of Top Cover Assembly		= 1,214 lbs	"
		Total = 92,613 lbs	⇒ 93,000 lbs

Force = 93^K x 25g = 2325^K

Allowable bolt stress = 0.7 S_m = 77 Ksi

Therefore the required bolt area = 2325 / 77 = 30.19 in^2

Bolts provided: 16, 1 ¾" dia bolts

Effective area per bolt = 1.9 in^2 [19], Table 1, pg 8 – 10

Therefore, area available = 16 (1.9 in^2) = 30.4 in^2

$$30.4\ in^2 > 30.19\ in^2 \Rightarrow \text{OK}$$

Shear does not exist due to oversize holes. Therefore bolts are adequate.

4.7 Bottom Center Cover Plate Analysis

The maximum stress in the bottom center cover plate results from the vertical drop accident condition. Please see Table 4.1.5.1 of Section 4.1.5 of this calculation package.

Check bolts:

8, ½" diameter bolts, ASME SA-193, Gr B7

Tension stress = P/A

P = 147 lbs

P x 75g = 11,025 lbs

A = .19 in^2 per bolt

σ = 11,025 / (8(0.19)) = 7.3 Ksi ⇒ OK

4.8 Miscellaneous Component Analysis

Trunnion ½ " End Plate and Screws [21]

The trunnions are designed to carry 126.5^K / trunnion longitudinally (critical lift case). The majority of the load will be carried by the trunnion insert plate. The amount of force transmitted to the liners is based upon their stiffness. The longitudinal moment contributes most significantly to the neutron jacket trunnion weld stress. Assuming that the trunnion acts as a rigid attachment, the moment will be distributed between the plates based on their relative stiffnesses which are proportional to t^3.

$$M_L = 1150(126.5/115.6) = 1258 \text{ K-in} \quad [21]$$

The portion of M_L in the Insert Plate

$$= 1258\,(2^3 / (2^3 + (0.25)^3)) = 1256 \text{ K-in}$$

The portion of M_L in the Neutron Shield Jacket

$$= 1258\,(0.25^3 / (2^3 + (0.25)^3)) = 2.45 \text{ K-in}$$

It can be seen that the moment in the neutron shield is almost negligible and therefore the stress is not significant.

In no design scenario are the end plate and screws subjected to any load. However 1/3 max vertical load will be conservatively applied to them as accident case.

Load $= 1/3\,(126.5^K) = 42.2^K$

Capacity of the 3/8 " screws $\approx 8^K$ (using 75 Ksi minimum tensile strength).

8 screws total capacity $= 8(8) = 64^K > 42.2^K \quad \Rightarrow$ OK

Load to the plate, $W = 42.2 / (\pi\, 10^2/4) = 0.537$ K / in.

$$M_{max} = \frac{-Wa^2}{b}\frac{c_9}{c_8}$$

$$a = 5" \qquad b = 3" \qquad \nu = 0.29$$

$$c_9 = \frac{3}{5}\left(\frac{1+0.29}{2}\ln\frac{5}{3} + \frac{1-0.29}{4}\left(1-\left(\frac{3}{5}\right)^2\right)\right) = 0.266$$

$$c_8 = \frac{1}{2}\left(1+0.29+(1-0.29)\left(\frac{3}{5}\right)^2\right) = 0.773$$

$$M_{max} = \frac{-0.537(5)^2}{3}\frac{0.266}{0.773} = 1.54\ \text{K}-\text{in/in}$$

$$\sigma = 6M/t^2 = 6(1.54)/0.5^2 = 37.0\ \text{Ksi}$$

$$V = \frac{0.537(5)}{3(0.5)} = 1.79\ \text{Ksi}$$

$$\text{S.I.} = \frac{37.0}{2} + \left[\left(\frac{37.0}{2}\right)^2 + 1.79^2\right]^{1/2} = 37.1\ \text{Ksi}$$

This is less than the 70 Ksi P_m+P_b Level D allowable.
Loading to the plate, however, should not occur.

Temporary Shield Plug [21]

[redacted]

Loads

The only loads on the temporary shield plug are the transfer g loads. 1g in any direction or ½ g in all directions simultaneously.

Loads are expected to be small – use a 2g vertical applied load to envelope worst case conditions.

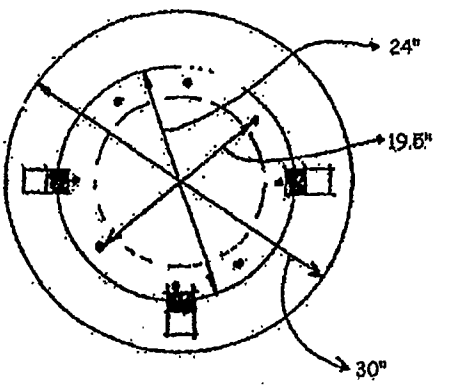

Weight of Assembly

Donut

Stainless steel

$$W_{d,ss} = \left[\frac{2\pi(30^2 - 12^2)(0.5)}{4} + 2\pi(6.25)(0.4) + 2\pi(14.25)(0.4)\right]0.283 = 183 \text{ lb}$$

Bisco

$$W_{d,b} = \left[\frac{\pi(29^2 - 13^2)(4)}{4}\right]0.064 = 135 \text{ lb}$$

Lid

Stainless Steel

$$W_{l,ss} = \left[\frac{2\pi(30^2(0.5)}{4} + 2\pi(11.25)(0.4)\right]0.283 = 136 \text{ lb}$$

Bisco

$$W_{d,ss} = \left[\frac{\pi(23^2(4)}{4}\right]0.064 = 106 \text{ lb}$$

Total weight, W_T = 183 lbs + 135 lbs + 136 lbs +106 lbs = 560 lbs

Applying the 2g vertical load, F = 1120 lbs

Thus, use of ¼ " fillet welds for all joints or groove welds where appropriate is adequate.

Width of the bracket = 2.5"

Shear stress on the weld = 1121 / (2.5 (0.707) (0.25) 2) = 1.27 Ksi (Weld is on two sides).

Temp. Shield Plug Lid Bracket [21]

Assume all load is carried by one bracket.

Shear area = 2 (0.5) = 1 in^2

τ = W(2g)/shear area = 274 (2)/1 = 548 psi ⇒ OK

Weld shear = 1.27 Ksi

Weld bending

Moment, M = 274(2)(2.5) = 1370 in-lb

S = bd = 2.5 (0.5) = 1.25

σ = 1370 / (1.25 (1000)) = 1.1 Ksi

Bending in Plate

I = 2.5 $(0.5)^3$ / 12 = 0.02 in^4

σ = 1370 (0.25) / 0.02 = 17.13 Ksi < 1.5 S_m = 28.0 Ksi ⇒ OK

5.0 Conclusions

5.1 Stress Analysis Results

The Stress Analysis Results for the Transfer Cask components are as follows:

Table 5.1 – Maximum Stress Identity

Component	Stress Type	Loading (Ksi)									
		Dead Weight	Handling		Thermal	Drop			Tornado		Seismic
			Vertical	Transfer		Vertical	Horiz	Corner	DBT	TGM	
Cask Structural Shell	P_m	0.68	0.59	5.5	-	8.75	41.3	30.9	1.2	9.71	1.4
	P_L	0.68	-	5.5	-	8.75	41.3	30.9	1.2	-	1.4
	$P_L + P_B$	0.68	-	30.5	-	8.75	41.3	41.3	3.83	31.0	1.4
	Q	-	-	-	28.5	-	-	-	-	-	-
Cask Inner Liner	P_m	0.68	-	11.1	-	6.5	41.3	30.9	-	-	1.4
	P_L	0.68	-	11.1	-	6.5	41.3	30.9	-	-	1.4
	$P_L + P_B$	0.68	-	14.6	-	6.5	41.3	41.3	-	-	1.4
	Q		-	-	18.0	-	-	-	-	-	-
Top Flange Ring	P_m	0.68	-	1.65	-	17.8	37.5	41.3	-	-	1.4
	$P_L + P_B$	1.02	-	7.0	-	17.8	56.3	51.6	-	-	2.0
	Q	-	-	-	18.0	-	-	-	-	-	-
Top 3" Cover Plate	P_m	0.52	-	-	-	30.2	28.1	30.9	-	-	1.1
	$P_L + P_B$	0.68	-	4.22	-	30.2	37.5	30.9	0.51	24.4	1.4
	Q	-	-	-	11.0	-	-	-	-	-	-
Inner Bottom2" Cover Plate	P_m	0.68	-	-	-	20.1	37.5	41.3	-	-	1.4
	$P_L + P_B$	0.86	10.3	9.62	-	20.1	46.9	41.3	0.39	21.6	1.8
	Q	-	-	-	15.0	-	-	-	-	-	-
Bottom Support Ring	P_m	0.68	-	5.1	-	26.9	37.5	41.3	-	-	1.4
	$P_L + P_B$	1.02	-	29.6	-	26.9	56.3	41.3	-	-	2.0
	Q	-	-	-	18.0	-	-	-	-	-	-
Bottom ¾" End Plate	P_m	0.34	-	-	-	6.5	18.8	41.3	-	-	0.7
	$P_L + P_B$	0.68	-	-	-	6.5	37.5	41.3	-	-	1.4
	Q	-	-	-	21.0	-	-	-	-	-	-
Outer Bottom Cover Plate	P_m	0.34	-	-	-	6.4	18.8	20.7	-	-	0.7
	$P_L + P_B$	0.68	-	-	-	6.4	37.5	20.7	-	-	1.4
	Q	-	-	-	11.0	-	-	-	-	-	-
Ram Access Penetration Ring	P_m	0.52	-	-	-	20.1	28.1	20.7	-	-	1.1
	$P_L + P_B$	0.68	-	-	-	20.1	37.5	20.7	-	-	1.4
	Q	-	-	-	18.0	-	-	-	-	-	-

5.2 Load Combination Results

The maximum stress combinations for ASME Service Levels A,B,C and D are added algebraically and shown in the tables below. The component stress intensities have the capability to withstand all the design loading combinations, in compliance with the requirements of ASME B + PV Code, Section III, Subsection NB.

Table 5.2.1 – Load Combinations Level A

Component	Stress Type	Load Combinations, Level A(ksi)		
		A1	A5	Allowable
		$DW + T + H_V$	$DW + T + H_T$	S.I.
Cask Structural Shell	P_M	1.27	6.18	21.7
	P_L	0.68	6.18	32.6
	P_L+P_B	0.68	30.50*	32.6
	P_L+P_B+Q	29.18	59.68	65.1
Cask Inner Liner	P_M	0.68	11.78	18.7
	P_L	0.68	11.78	28.1
	P_L+P_B	0.68	15.28	28.1
	P_L+P_B+Q	18.68	32.60	56.1
Top Flange	P_M	0.68	2.33	18.7
	P_L+P_B	1.02	8.02	28.1
	P_L+P_B+Q	19.02	26.02	56.1
Top 3" Cover Plate	P_M	0.52	0.52	18.7
	P_L+P_B	0.68	4.90	28.1
	P_L+P_B+Q	11.68	15.90	56.1
Bottom Support Ring	P_M	0.68	5.78	20.0 (@300°F)
	P_L+P_B	1.02	29.60*	30.0 (@300°F)
	P_L+P_B+Q	19.02	48.62	60.0 (@300°F)
Bottom 2" Cover Plate	P_M	0.68	0.68	18.7
	P_L+P_B	11.16	10.48	28.1
	P_L+P_B+Q	26.16	25.48	56.1
Bottom ¾" Cover Plate	P_M	0.34	0.34	18.7
	P_L+P_B	0.68	0.68	28.1
	P_L+P_B+Q	21.68	21.68	56.1
Bottom 1" Cover Plate	P_M	0.34	0.34	18.7
	P_L+P_B	0.68	0.68	28.1
	P_L+P_B+Q	11.68	11.68	56.1
Ram Access Penetration Ring	P_M	0.52	0.52	18.7
	P_L+P_B	0.68	0.68	28.1
	P_L+P_B+Q	18.68	18.68	56.1

*Dead Weight Value from Table 5.1 not included because the transfer loads include a dead weight component.

Table 5.2.2 – Load Combinations Level B

Component	Stress Type	Load Combinations, Level B(ksi)	
		B2	Allowable
		$DW + T + H_T$	S.I.
Cask Structural Shell	P_M	6.18	21.7
	P_L	6.18	32.6
	P_L+P_B	30.50*	32.6
	P_L+P_B+Q	59.68	65.1
Cask Inner Liner	P_M	11.78	18.7
	P_L	11.78	28.1
	P_L+P_B	15.28	28.1
	P_L+P_B+Q	32.60	56.1
Top Flange	P_M	2.33	18.7
	P_L+P_B	8.02	28.1
	P_L+P_B+Q	26.02	56.1
Top 3" Cover Plate	P_M	0.52	18.7
	P_L+P_B	4.90	28.1
	P_L+P_B+Q	15.90	56.1
Bottom Support Ring	P_M	5.78	20.0 (@300°F)
	P_L+P_B	29.60*	30.0 (@300°F)
	P_L+P_B+Q	48.62	60.0 (@300°F)
Bottom 2" Cover Plate	P_M	0.68	18.7
	P_L+P_B	10.48	28.1
	P_L+P_B+Q	25.48	56.1
Bottom ¾" Cover Plate	P_M	0.34	18.7
	P_L+P_B	0.68	28.1
	P_L+P_B+Q	21.68	56.1
Bottom 1" Cover Plate	P_M	0.34	18.7
	P_L+P_B	0.68	28.1
	P_L+P_B+Q	11.68	56.1
Ram Access Penetration Ring	P_M	0.52	18.7
	P_L+P_B	0.68	28.1
	P_L+P_B+Q	18.68	56.1

*Dead Weight Value from Table 5.1 not included because the transfer loads include a dead weight component.

Table 5.2.3 – Load Combinations Level C

Component	Stress Type	Load Combinations, Level C(ksi)		
		C2	C3	Allowable
		$DW + T + H_T + E$	$DW + T + H_T + DBT$	S.L
Cask Structural Shell	P_M	7.58	7.38	26.0
	P_L	7.58	7.38	39.1
	P_L+P_B	32.98	35.01	39.1
Cask Inner Liner	P_M	13.18	11.78	22.4
	P_L	13.18	11.78	33.7
	P_L+P_B	16.68	15.28	33.7
Top Flange	P_M	3.73	2.33	22.4
	P_L+P_B	10.02	8.02	33.7
Top 3" Cover Plate	P_M	1.62	0.52	22.4
	P_L+P_B	6.30	5.41	33.7
Bottom Support Ring	P_M	7.18	5.78	22.4
	P_L+P_B	32.62	30.62	33.7
Bottom 2" Cover Plate	P_M	2.08	0.68	22.4
	P_L+P_B	12.28	10.87	33.7
Bottom ¾" Cover Plate	P_M	1.04	0.34	22.4
	P_L+P_B	2.08	0.68	33.7
Bottom 1" Cover Plate	P_M	1.04	0.34	22.4
	P_L+P_B	2.08	0.68	33.7
Ram Access Penetration Ring	P_M	1.62	0.52	22.4
	P_L+P_B	2.08	0.68	33.7

Note: 1. Load combination C1 from Table 3.1 is bounded by combination C2.

2. "Q" loads do not contribute to Level C stresses [9].

Table 5.2.4 – Load Combinations Level D

Component	Stress Type	Load Combinations, Level C (ksi)				
		D1	D2	D3	D4	Allowable S.I.
		$DW + T^* + DL_v$	$DW + T^* + DL_c$	$DW + T^* + DL_h$	DW + TGM	
Cask Structural Shell	P_M	9.43	31.58	41.98	10.39	49.0
	P_L	9.43	31.58	41.98	-	70.0
	P_L+P_B	9.43	41.98	41.98	31.68	70.0
Cask Inner Liner	P_M	7.18	31.58	41.98	-	44.9
	P_L	7.18	31.58	41.98	-	64.4
	P_L+P_B	7.18	41.98	41.98	-	64.4
Top Flange	P_M	18.48	41.98	38.18	-	44.9
	P_L+P_B	18.82	52.82	57.32	-	64.4
Top 3" Cover Plate	P_M	30.72	31.42	28.62	-	44.9
	P_L+P_B	30.88	31.58	38.18	25.08	64.4
Bottom Support Ring	P_M	27.58	41.98	38.18	-	44.9
	P_L+P_B	27.92	42.32	57.32	-	64.4
Bottom 2" Cover Plate	P_M	20.78	41.98	38.18	-	44.9
	P_L+P_B	20.96	42.16	47.76	22.46	64.4
Bottom ¾" Cover Plate	P_M	6.85	41.64	19.14	-	44.9
	P_L+P_B	7.18	41.98	38.18	-	64.4
Bottom 1" Cover Plate	P_M	6.74	21.04	19.14	-	44.9
	P_L+P_B	7.08	21.38	38.18	-	64.4
Ram Access Penetration Ring	P_M	20.62	21.22	28.62	-	44.9
	P_L+P_B	20.78	21.38	38.18	-	64.4

* Thermal stress or "Q" stresses are not considered under Level D conditions

6.0 References

1. Hopper and Associates Letter HABGE-05/98-645, "CCNPP ISFSI Structural Calculation Review – Detailed Evaluation Results," Rev. 0, May 1998.

2. Issue Report Nos. IR3-005-169 & 172, re: Transfer Cask Analysis, dated 2/6/98 & 4/21/98 respectively.

3. Nutech Calculation Package, "Analysis of TC for Design Basis Tornado (DBT)," Nutech File No. Duk003.0412, Rev. 0.

4. USAR, "Updated Safety Analysis Report," Calvert Cliffs Nuclear Power Plant ISFSI, Rev. 4.

5. SER, "Safety Evaluation Report," BGE001.002412, November 1992.

6. Baltimore Gas and Electric Company

   BGE-01-3001, "Structural Shell Assembly", Dwg. No. 84-021-E, Rev. 0, 11/93.
   BGE-01-3001, "Structural Shell Assembly", Dwg. No. 84-022-E, Rev. 0, 11/93.
   BGE-01-3001, "Structural Shell Assembly", Dwg. No. 84-023-E, Rev. 0, 11/93.
   BGE-01-3001, "Structural Shell Assembly", Dwg. No. 84-024-E, Rev. 0, 11/93.
   BGE-01-3002, "Inner & Outer Shell Assembly", Dwg. No. 84-107-E, Rev. 0 11/93.
   BGE-01-3002, "Inner & Outer Shell Assembly", Dwg. No. 84-018-E, Rev. 0, 11/93
   BGE-01-3002, "Inner & Outer Shell Assembly", Dwg. No. 84-025-E, Rev. 0, 11/93.
   BGE-01-3002, "Inner & Outer Shell Assembly", Dwg. No. 84-026-E, Rev. 0, 11/93.
   BGE-01-3003, "Main Assembly", Dwg. No. 84027, Rev. 1, 9/96.
   BGE-01-3003, "Main Assembly", Dwg. No. 84028, Rev. 2, 9/96.
   BGE-01-3003, "Main Assembly", Dwg. No. 84029, Rev. 1, 9/96.
   BGE-01-3004, "Accessories", Dwg. No. 84-030-E, Rev. 0, 11/93.
   BGE-01-2102, "Onsite Transfer Cask Support Skid Assembly", Dwg. No. 84-039-E, Rev. 0 11/93.
   BGE-01-2102, "Onsite Transfer Cask Support Skid Assembly", Dwg. No. 84-040-E, Rev. 0 11/93.
   BGE-01-2101, "Cask Lifting Yoke Assembly", Dwg. No. 84-035-E, Rev. 6, 9/92

BGE-01-2101, "Cask Lifting Yoke Assembly", Dwg. No. 84-036-E, Rev. 6, 9/92

BGE-01-2101, "Cask Lifting Yoke Assembly", Dwg. N0o. 84-037-E, Rev. 6, 9/92

7. Nutech Calculation Package, "Independent Spent Fuel Storage Facility, Transfer Cask Structural Analysis", Nutech File No. BGE001.0202, Rev. 4, Sept 1990

8. Nutech Calculation Package, "Supplemental Transfer Cask Structural Analysis", Nutech File No. BGE001.0202A., Rev. 1, Sept. 1997

9. American Society of Mechanical Engineers, "ASME Boiler and Pressure Vessel Code", Section III, Division 1, Subsections NB, NC, and Appendices, 1983 Edition.

10. Nutech Document, "Topical Report for the Nutech Horizontal Modular Storage System for Irradiated Nuclear Fuel", Nutech Document No. NUH-002, Revision 1A.

11. ANSYS Inc, ANSYS Version 5.2, Houston, PA 1996.

12. Hopper and Associates Memorandum to the Staff, "Verified Computer Programs", March 9, 1998.

13. CCNP Calculation No.CA03988, "Final Weight Calculation of NUHOMS – 24P DSC/Transfer Cask System", Rev. 2, July 1998.

14. American Society of Mechanical Engineers, "ASME Boiler and Pressure Vessel Code", Section II, Part D, Subparts 1 and 2, 1992 Edition.

15. CRC Handbook of Tables for Applied Engineering Science, 2nd Edition, 1973.

16. Pacific Nuclear calculation package, "Velocity Calculation for a Canister Resulting in a Massive Impact Load, BGE001.0223, Rev. 0, Nov. 1993.

17. Nutech Calculation, "Thermal Analysis of the DSC/Cask Geometry for the Calvert Cliffs NUHOMS Design in the Radial and Axial Directions", File No. BGE001.0405, Rev. 0.

18. McMaster-Carr Supply Company, Catalog 92.

19. Baumeister, Avallone & Baumeister, "Marks' Standard Handbook for Mechanical Engineers", Eighth Edition, McGraw-Hill Book Company, Inc.,

20. AISC, "Manual of Steel Construction", Ninth Edition, 1989.

21. Nutech Calculation, "Transfer Cask Structural Analysis Package," DUK003.0401, Rev. 2.

22. Roark, R.J. and Young, W.C. "Formulas for Stress and Stain", McGraw-Hill Book Company, Inc., Sixth Edition, 1975.

23. U.S. Atomic Energy Commission, "Design Basis Tornado for Nuclear Power Plants", Regulatory Guide 1.76, April 1974.

24. American National Standard, "Building Code Requirements for Minimum Design Loads for Buildings and Other Structures," ANSI/A58.1-1982, American National Standards Institute, Inc. New York, NY, 1982.

25. U.S. Nuclear Regulatory Commission, "Missile Generated by Natural Phenomena," Standard Review Plan, NUREG-0800, 3.5.1.4 (Formerly NUREG 75/087), Rev. 2, July 1981.

26. H. A. Nelms, "Structural Analysis of Shipping Casks, Effects of Jacket Physical Properties and Curvature and Puncture Resistance," Vol. 3, ORNL TM-1312, Oak Ridge National Laboratory, Oak Ridge Tennessee, June 1968.

27. R. B. Linderman, J. V. Rotz, and G. C. K. Yeh, "Design of Structures for Missile Impact:," Topical Report BC-TOP-9-A, Bechtel Power Corporation, Revision 2, September 1974.

28. CCNP Calculation No.CA03988, "Stability Analysis of the TC / DSC / Skid / Trailer System", Rev. 0, June 1998.

29. Talbert Manufacturing Inc., "Instruction Manual for Hydraulically Suspended Trailer," DUK003.0028.

30. Nutech Document, "Design Specification for NUHOMS-24P System On-Site Transfer Cask and Lifting Yoke Independent Spent Fuel Storage Facility Calvert Cliffs Nuclear Power Plant," File No. BGE-01-106, Rev. 1, March 1989.

31. Holman, J. P., "Heat Transfer", McGraw-Hill Book Company, Fourth Edition, 1976.

32. American Society of Metal, "ASM Handbook," Vol. 2, ASM, 1990.

33. Lambe & Whitman, "Soil Mechanics", John Wiley and Sons, 1969.

34. CCNPP Calculation No. CA04141, Rev. No. 0001, "ISFSI Transfer Cask Structural Analysis."

35. TNY, Calculation No. 1095-1, "NUHOMS 32P – Weight Calculations of DSC / TC System, "Revision 0.

36. TN Calculation No. 1095-6, "NUHOMS 32P – Weight Calculations of DSC / TC System, "Revision 0.

37. TN Calculation No. 1095-16, "NUHOMS 32P – Weight Calculations of DSC / TC System, "Revision 0.