ATTACHMENT (8)

TRANSNUCLEAR CALCULATION NO. 1095-16 –

NON-PROPRIETARY VERSION

Calvert Cliffs Nuclear Power Plant, LLC
March 9, 2011

TRANSNUCLEAR

Form 3.1-1
Calculation Approval Sheet

Project Name: NUHOMS-32P **Project #:** 10950

Calculation Title: Transfer Thermal Analysis, -3°F Ambient

Calculation #: 1095-16 **Draft/Revision #:** 0 **DCR #:** ---

Number of pages: 20

Number of CDs attached: 1

If original issue, 10CFR72.48 review required?
[X] No (explain) **[ ] Yes, SR No.** _____
This calculation is performed in support of the licensee, CCNPP

1. **This calculation is complete and ready for independent review**

   Originator's Signature _____ Date: 7/1/03

2. **This calculation has been checked for consistency, completeness, and arithmetic correctness.**

   Checker Signature _____ Date: 7/1/03

3. **Calculation preparation and check complies with procedure - package is complete**

   PE's Signature Glenn Guerra Date: 8/25/03

1.0 Purpose

To determine component temperatures of the NUHOMS-32P packaging during transport with an ambient temperature of -3 °F and no insolation using the same methodology as the Calvert Cliffs SAR supporting calculations.

2.0 References

1) Kreith et. al., The CRC Handbook of Thermal Engineering, 2000.
2) "The Topical Report for the NUTECH Horizontal Modular Storage System for Irradiated Nuclear Fuel", Rev. 1A.
3) Rohsenow et. al., Handbook of Heat Transfer Fundamentals, 1985.
4) Calculation 1095-5, Rev. 0, Finite Element Models, Thermal Analysis
5) (NOT USED)
6) *Chemical Engineers' Handbook, Fifth Edition*, Perry P.H. and Chilton C.H., McGraw-Hill Book Co., New York, 1973.
7) Calvert Cliffs Independent Spent Fuel Storage Installation, Safety Analysis Report, Volume 1, Rev. 11
8) ANSYS Computer Code and User's Manuals, Volumes 1-4, Rev. 5.6. See Test Reports E-17740, E-17741, and E-18554 through E-18557 for validation of computer code.
9) ANSYS files: /Calc1095-16/ CCCask.db, CCCask.rth, RadMat.sub, CCCask.mac
CCBasket.db, CCBasket.rth, CCBasket.mac

3.0 Assumptions

This analysis is performed using the finite element models created within Reference 4. All assumptions, material properties, and modeling details are the same as those in Reference 4.

The material properties for air, used in the determination of the total heat transfer coefficients, are reprinted in Appendix A.

4.0 Discussion

The three-dimensional quarter-symmetry finite element models of the NUHOMS-32P packaging described in Reference 4 are used for the analysis. All assumptions and material properties from Reference 4 remain unchanged within this calculation. For conservatism, temperature distributions are determined under steady-state conditions.

Two finite element models are used within the analysis:

- A cask body model consisting of the cask body, lid, ram plate, and canister.
- A basket model consisting of the canister, basket, and fuel assemblies.

The cask body model is run with the fuel decay heat load applied as a heat flux to the canister inner cavity surfaces. The temperature distribution within the canister calculated within the cask body model is applied to the canister within the basket model. Noding of the canister within the two finite element models is identical. The fuel decay heat load is applied to the fuel elements of the basket model as an internal heat generation.

Boundary condition details can be found in the Appendices.

The approach used within the analysis is the same as that used in the supporting calculations for the Calvert Cliffs ISFSI SAR.

4.1 Thermal Design Criteria

- A maximum fuel cladding temperature limit of 570 °C (1058 °F) is set for the fuel assemblies with an inert cover gas as concluded in Reference 7.
- A maximum temperature limit of 327 °C (620 °F) is set for the lead, corresponding to the melting point (Reference 6).
- A maximum limit of 280 °F on the bulk temperature of the resin is set in Reference 7.

5.0 Results

Temperature distributions obtained from the finite element models are found in Appendix B.

6.0 Conclusions

Maximum Component Temperatures in NUHOMS-32P packaging

Component	Maximum Temperature	Thermal Limits
(---)	(°F)	(°F)
Outer Shell	147	---
Resin	224	280 max.
Lead	265	620 max.
Cask Body	233	---
Fuel Cladding	664	1058 max.
Cask Lid	202	---
Ram Plate	132	---
Canister	371	---
Fuel Compartments	638	---
Peripheral Inserts	492	---
Aluminum Basket Plates	638	---
Stainless Steel Bars	638	---

All components remain below thermal design criteria during normal conditions of transport.

APPENDIX A

Total Heat Transfer Coefficients

The exposed portions of the packaging dissipate heat to the ambient via natural convection and radiation.

Radiation Coefficient

The heat transfer coefficient, H_r, for heat dissipation by radiation, is given by the equation:

$$H_r = F_{12}\left[\frac{\sigma(T_1^4 - (E)(T_2^4))}{T_1 - T_2}\right] Btu/hr - ft^2 - {}^oF$$

where,

F_{12}	= the gray body exchange coefficient
	= (surface emissivity) (view factor)
E	= 1.0
T_1	= surface temperature, °R
T_2	= ambient temperature, °R

Emissivity and Absorptivity

The external surfaces of the packaging are stainless steel (emissivity = 0.587, Reference 2

Horizontal Cylinders

Heat dissipation by natural convection from horizontal cylinders is described by the following equations (Reference 1):

$$Nu = h_c \frac{L}{k} = \left((Nu_l)^{15} + (Nu_t)^{15}\right)^{1/15}$$

Nu_l = Laminar portion of the heat transfer coefficent.
Nu_t = Turbulent portion of the heat transfer coefficent.

$$Nu_t = \overline{C_t} Ra^{1/3}$$

$$\overline{C_t} = 0.103 \text{ for } Pr \approx 0.71$$

$$Nu_l = \frac{2f}{\left(1 + \frac{2f}{Nu^T}\right)}$$

$$f = 0.8 \text{ for } Ra > 10^{-2} \; ; \; Ra = Gr * Pr$$

$$Nu^T = 0.772\left(\overline{C_l} Ra^{1/4}\right)$$

$$\overline{C_l} = \frac{0.671}{\left(1 + \left(\frac{0.492}{Pr}\right)^{9/16}\right)^{4/9}}$$

Nu^T accounts for the effect of the boundary layer thickness.
where,

Nu	= Nusselt number
Gr	= Grashof number = $\rho^2 g\beta(T_s - T_a)L^3/\mu^2$
Pr	= Prandtl number
Ra	= Rayleigh number = Gr*Pr
ρ	= density
g	= acceleration due to gravity
β	= temperature coefficient of volume expansion
μ	= absolute viscosity
L	= characteristic length
h_c	= natural convection coefficient
k	= thermal conductivity

The total heat transfer coefficients for radial surfaces of horizontal cylinders are calculated and input into ANSYS via the HTOT_HCY macro, included within this appendix.

Vertical Flat Plates

Heat dissipation by natural convection from vertical flat plates is described by the following equations (Reference 1):

$$Nu = h_c \frac{L}{k} = \left((Nu_l)^6 + (Nu_t)^6\right)^{1/6} \quad \text{for } 1 < Ra < 1012 \; ; \; Ra = Gr * Pr$$

Nu_l = Laminar portion of the heat transfer coefficent.
Nu_t = Turbulent portion of the heat transfer coefficent.

$$Nu_t = \frac{C_t^V Ra^{1/3}}{\left(1 + 1.4x10^9\left(\frac{Pr}{Ra}\right)\right)}$$

$$C_t^V = \frac{0.13Pr^{0.22}}{\left(1 + 0.61Pr^{0.81}\right)^{0.42}}$$

$$Nu_l = \frac{2.0}{\ln\left(1 + \frac{2.0}{Nu^T}\right)}$$

$$Nu^T = \overline{C_l} Ra^{1/4}$$

$$\overline{C_l} = \frac{0.671}{\left(1 + \left(\frac{0.492}{Pr}\right)^{9/16}\right)^{4/9}}$$

Nu^T accounts for the effect of the boundary layer thickness.
where,

Nu	= Nusselt number
Gr	= Grashof number = $\rho^2 g\beta(T_s - T_a)L^3/\mu^2$
Pr	= Prandtl number
Ra	= Rayleigh number = Gr*Pr
ρ	= density
g	= acceleration due to gravity
β	= temperature coefficient of volume expansion
μ	= absolute viscosity
L	= characteristic length
h_c	= natural convection coefficient
k	= thermal conductivity

The total heat transfer coefficients for vertical flat surfaces are calculated and input into ANSYS via the HTOT_VPL macro, included within this appendix.

Total Heat Transfer Coefficients, Cask Radial Surfaces

Mat, 1
ε = 0.587
View Factor = 1.0
L = 89.00"

T_s	T_{avg}	k	Ra	H_c	H_r	H_{tot}
(°F)	(°F)	(Btu/h-ft-°F)	(---)	(Btu/h-in^2-°F)	(Btu/h-in^2-°F)	(Btu/h-in^2-°F)
110	53.5	0.0145	8.61E+10	0.0062	0.0038	0.0100
115	56.0	0.0146	8.79E+10	0.0062	0.0039	0.0101
120	58.5	0.0146	8.96E+10	0.0063	0.0040	0.0103
125	61.0	0.0147	9.12E+10	0.0064	0.0040	0.0104
130	63.5	0.0147	9.27E+10	0.0064	0.0041	0.0105
135	66.0	0.0148	9.41E+10	0.0065	0.0041	0.0106
140	68.5	0.0148	9.54E+10	0.0065	0.0042	0.0107
145	71.0	0.0149	9.66E+10	0.0066	0.0043	0.0109
150	73.5	0.0150	9.77E+10	0.0066	0.0043	0.0110
155	76.0	0.0150	9.87E+10	0.0067	0.0044	0.0111
160	78.5	0.0151	9.96E+10	0.0067	0.0045	0.0112
165	81.0	0.0152	1.00E+11	0.0068	0.0045	0.0113
170	83.5	0.0152	1.01E+11	0.0068	0.0046	0.0114
175	86.0	0.0153	1.02E+11	0.0069	0.0047	0.0116
180	88.5	0.0154	1.03E+11	0.0069	0.0047	0.0117
185	91.0	0.0154	1.03E+11	0.0070	0.0048	0.0118
190	93.5	0.0155	1.04E+11	0.0070	0.0049	0.0119
195	96.0	0.0155	1.04E+11	0.0071	0.0050	0.0120
200	98.5	0.0156	1.05E+11	0.0071	0.0050	0.0121
205	101.0	0.0157	1.05E+11	0.0071	0.0051	0.0122
210	103.5	0.0157	1.05E+11	0.0072	0.0052	0.0124
215	106.0	0.0158	1.06E+11	0.0072	0.0053	0.0125
220	108.5	0.0159	1.06E+11	0.0072	0.0053	0.0126
225	111.0	0.0159	1.06E+11	0.0073	0.0054	0.0127
230	113.5	0.0160	1.06E+11	0.0073	0.0055	0.0128
235	116.0	0.0161	1.06E+11	0.0073	0.0056	0.0129
240	118.5	0.0161	1.06E+11	0.0074	0.0056	0.0130
245	121.0	0.0162	1.06E+11	0.0074	0.0057	0.0131
250	123.5	0.0163	1.07E+11	0.0074	0.0058	0.0132
255	126.0	0.0163	1.06E+11	0.0075	0.0059	0.0134

Total Heat Transfer Coefficients, Cask Radial Surfaces

Mat, 1
$\varepsilon = 0.587$
View Factor = 1.0
L = 89.00"

T_s	T_{avg}	k	Ra	H_c	H_r	H_{tot}
(°F)	(°F)	(Btu/h-ft-°F)	(---)	(Btu/h-ft^2-°F)	(Btu/h-in^2-°F)	(Btu/h-in^2-°F)
260	128.5	0.0164	1.06E+11	0.0075	0.0060	0.0135
265	131.0	0.0164	1.06E+11	0.0075	0.0061	0.0136
270	133.5	0.0165	1.06E+11	0.0075	0.0062	0.0137
275	136.0	0.0165	1.06E+11	0.0076	0.0062	0.0138
280	138.5	0.0166	1.06E+11	0.0076	0.0063	0.0139
285	141.0	0.0167	1.06E+11	0.0076	0.0064	0.0140
290	143.5	0.0167	1.06E+11	0.0076	0.0065	0.0141
295	146.0	0.0168	1.05E+11	0.0076	0.0066	0.0142
300	148.5	0.0168	1.05E+11	0.0077	0.0067	0.0143
305	151.0	0.0169	1.05E+11	0.0077	0.0068	0.0145
310	153.5	0.0169	1.05E+11	0.0077	0.0069	0.0146
315	156.0	0.0170	1.04E+11	0.0077	0.0070	0.0147
320	158.5	0.0171	1.04E+11	0.0077	0.0071	0.0148
325	161.0	0.0171	1.04E+11	0.0078	0.0072	0.0149
330	163.5	0.0172	1.03E+11	0.0078	0.0073	0.0150
335	166.0	0.0173	1.03E+11	0.0078	0.0074	0.0152
340	168.5	0.0173	1.03E+11	0.0078	0.0075	0.0153
345	171.0	0.0174	1.02E+11	0.0078	0.0076	0.0154
350	173.5	0.0175	1.02E+11	0.0079	0.0077	0.0155
355	176.0	0.0175	1.01E+11	0.0079	0.0078	0.0156
360	178.5	0.0176	1.01E+11	0.0079	0.0079	0.0158
365	181.0	0.0176	1.01E+11	0.0079	0.0080	0.0159
370	183.5	0.0177	1.00E+11	0.0079	0.0081	0.0160
375	186.0	0.0178	9.98E+10	0.0079	0.0082	0.0161
380	188.5	0.0178	9.93E+10	0.0080	0.0083	0.0162
385	191.0	0.0179	9.89E+10	0.0080	0.0084	0.0164
390	193.5	0.0179	9.84E+10	0.0080	0.0085	0.0165
395	196.0	0.0180	9.80E+10	0.0080	0.0086	0.0166
400	198.5	0.0180	9.75E+10	0.0080	0.0087	0.0167
405	201.0	0.0181	9.70E+10	0.0080	0.0088	0.0169

Total Heat Transfer Coefficients, Cask Vertical Surfaces

Mat, 2
$\varepsilon = 0.587$
View Factor = 1.0
L = 89.00"

T_s	T_{avg}	K	Ra	H_c	H_r	H_{tot}
(°F)	(°F)	(Btu/h-ft-°F)	(---)	(Btu/h-in^2-°F)	(Btu/h-in^2-°F)	(Btu/h-in^2-°F)
110	53.5	0.0145	8.61E+10	6.16E-03	3.83E-03	9.99E-03
115	56.0	0.0146	8.79E+10	6.22E-03	3.89E-03	1.01E-02
120	58.5	0.0146	8.96E+10	6.29E-03	3.95E-03	1.02E-02
125	61.0	0.0147	9.12E+10	6.35E-03	4.01E-03	1.04E-02
130	63.5	0.0147	9.27E+10	6.41E-03	4.07E-03	1.05E-02
135	66.0	0.0148	9.41E+10	6.46E-03	4.14E-03	1.06E-02
140	68.5	0.0148	9.54E+10	6.52E-03	4.20E-03	1.07E-02
145	71.0	0.0149	9.66E+10	6.57E-03	4.27E-03	1.08E-02
150	73.5	0.0150	9.77E+10	6.62E-03	4.33E-03	1.10E-02
155	76.0	0.0150	9.87E+10	6.67E-03	4.40E-03	1.11E-02
160	78.5	0.0151	9.96E+10	6.72E-03	4.46E-03	1.12E-02
165	81.0	0.0152	1.00E+11	6.77E-03	4.53E-03	1.13E-02
170	83.5	0.0152	1.01E+11	6.82E-03	4.60E-03	1.14E-02
175	86.0	0.0153	1.02E+11	6.86E-03	4.67E-03	1.15E-02
180	88.5	0.0154	1.03E+11	6.91E-03	4.74E-03	1.16E-02
185	91.0	0.0154	1.03E+11	6.95E-03	4.81E-03	1.18E-02
190	93.5	0.0155	1.04E+11	6.99E-03	4.88E-03	1.19E-02
195	96.0	0.0155	1.04E+11	7.03E-03	4.96E-03	1.20E-02
200	98.5	0.0156	1.05E+11	7.07E-03	5.03E-03	1.21E-02
205	101.0	0.0157	1.05E+11	7.11E-03	5.10E-03	1.22E-02
210	103.5	0.0157	1.05E+11	7.14E-03	5.18E-03	1.23E-02
215	106.0	0.0158	1.06E+11	7.18E-03	5.26E-03	1.24E-02
220	108.5	0.0159	1.06E+11	7.21E-03	5.33E-03	1.25E-02
225	111.0	0.0159	1.06E+11	7.25E-03	5.41E-03	1.27E-02
230	113.5	0.0160	1.06E+11	7.28E-03	5.49E-03	1.28E-02
235	116.0	0.0161	1.06E+11	7.31E-03	5.57E-03	1.29E-02
240	118.5	0.0161	1.06E+11	7.34E-03	5.65E-03	1.30E-02
245	121.0	0.0162	1.06E+11	7.37E-03	5.73E-03	1.31E-02
250	123.5	0.0163	1.07E+11	7.40E-03	5.81E-03	1.32E-02
255	126.0	0.0163	1.06E+11	7.43E-03	5.90E-03	1.33E-02

Total Heat Transfer Coefficients, Cask Vertical Surfaces

Mat, 2
$\varepsilon = 0.587$
View Factor = 1.0
L = 89.00"

T_s	T_{avg}	K	Ra	H_c	H_r	H_{tot}
(°F)	(°F)	(Btu/h-ft-°F)	(---)	(Btu/h-ft^2-°F)	(Btu/h-in^2-°F)	(Btu/h-in^2-°F)
260	128.5	0.0164	1.06E+11	7.45E-03	5.98E-03	1.34E-02
265	131.0	0.0164	1.06E+11	7.48E-03	6.07E-03	1.35E-02
270	133.5	0.0165	1.06E+11	7.50E-03	6.15E-03	1.37E-02
275	136.0	0.0165	1.06E+11	7.52E-03	6.24E-03	1.38E-02
280	138.5	0.0166	1.06E+11	7.54E-03	6.33E-03	1.39E-02
285	141.0	0.0167	1.06E+11	7.56E-03	6.42E-03	1.40E-02
290	143.5	0.0167	1.06E+11	7.58E-03	6.50E-03	1.41E-02
295	146.0	0.0168	1.05E+11	7.60E-03	6.60E-03	1.42E-02
300	148.5	0.0168	1.05E+11	7.62E-03	6.69E-03	1.43E-02
305	151.0	0.0169	1.05E+11	7.64E-03	6.78E-03	1.44E-02
310	153.5	0.0169	1.05E+11	7.66E-03	6.87E-03	1.45E-02
315	156.0	0.0170	1.04E+11	7.68E-03	6.97E-03	1.47E-02
320	158.5	0.0171	1.04E+11	7.71E-03	7.06E-03	1.48E-02
325	161.0	0.0171	1.04E+11	7.73E-03	7.16E-03	1.49E-02
330	163.5	0.0172	1.03E+11	7.75E-03	7.26E-03	1.50E-02
335	166.0	0.0173	1.03E+11	7.77E-03	7.36E-03	1.51E-02
340	168.5	0.0173	1.03E+11	7.79E-03	7.46E-03	1.52E-02
345	171.0	0.0174	1.02E+11	7.80E-03	7.56E-03	1.54E-02
350	173.5	0.0175	1.02E+11	7.82E-03	7.66E-03	1.55E-02
355	176.0	0.0175	1.01E+11	7.84E-03	7.76E-03	1.56E-02
360	178.5	0.0176	1.01E+11	7.86E-03	7.86E-03	1.57E-02
365	181.0	0.0176	1.01E+11	7.87E-03	7.97E-03	1.58E-02
370	183.5	0.0177	1.00E+11	7.89E-03	8.07E-03	1.60E-02
375	186.0	0.0178	9.98E+10	7.90E-03	8.18E-03	1.61E-02
380	188.5	0.0178	9.93E+10	7.91E-03	8.29E-03	1.62E-02
385	191.0	0.0179	9.89E+10	7.92E-03	8.40E-03	1.63E-02
390	193.5	0.0179	9.84E+10	7.94E-03	8.51E-03	1.64E-02
395	196.0	0.0180	9.80E+10	7.95E-03	8.62E-03	1.66E-02
400	198.5	0.0180	9.75E+10	7.96E-03	8.73E-03	1.67E-02
405	201.0	0.0181	9.70E+10	7.97E-03	8.84E-03	1.68E-02

Air Properties

Temperature[1]	ρ[1]	Conductivity[1]	Prandtl #[1]	Dyn. Visc.[1]
(K)	(kg/m^3)	(W/m-K)	(-----)	(Pa-s)
255	1.386	22.68E-3	0.721	16.25E-6
265	1.333	23.48E-3	0.717	16.75E-6
280	1.261	24.67E-3	0.713	17.50E-6
295	1.197	25.85E-3	0.709	18.22E-6
310	1.139	27.01E-3	0.705	18.93E-6
325	1.086	28.15E-3	0.702	19.63E-6
340	1.038	29.28E-3	0.699	20.30E-6
355	0.9945	30.39E-3	0.696	20.97E-6
370	0.9539	31.50E-3	0.693	21.60E-6
385	0.9169	32.59E-3	0.690	22.24E-6
400	0.8822	33.65E-3	0.689	22.86E-6
420	0.8402	35.05E-3	0.687	23.66E-6
440	0.8021	36.43E-3	0.684	24.45E-6

Temperature	Conductivity	Conductivity	Prandtl #	Kin. Visc.
(°F)	(Btu/hr-ft-°F)	(Btu/hr-in-°F)	(-----)	(ft^2-hr)
-1	0.0131	0.0011	0.721	0.4543
17	0.0136	0.0011	0.717	0.4869
44	0.0143	0.0012	0.713	0.5378
71	0.0149	0.0012	0.709	0.5898
98	0.0156	0.0013	0.705	0.6440
125	0.0163	0.0014	0.702	0.7004
152	0.0169	0.0014	0.699	0.7578
179	0.0176	0.0015	0.696	0.8171
206	0.0182	0.0015	0.693	0.8775
233	0.0188	0.0016	0.690	0.9399
260	0.0194	0.0016	0.689	1.0041
296	0.0203	0.0017	0.687	1.0912
332	0.0210	0.0018	0.684	1.1812

HTOT_HCY.MAC

PROPRIETARY INFORMATION WITHHELD UNDER 10CFR 2.390

PROPRIETARY INFORMATION WITHHELD UNDER 10CFR 2.390

PROPRIETARY INFORMATION WITHHELD UNDER 10CFR 2.390

HTOT_VPL.MAC

PROPRIETARY INFORMATION WITHHELD UNDER 10CFR 2.390

PROPRIETARY INFORMATION WITHHELD UNDER 10CFR 2.390

PROPRIETARY INFORMATION WITHHELD UNDER 10CFR 2.390

APPENDIX B

Temperature Distributions

Cask Body Model

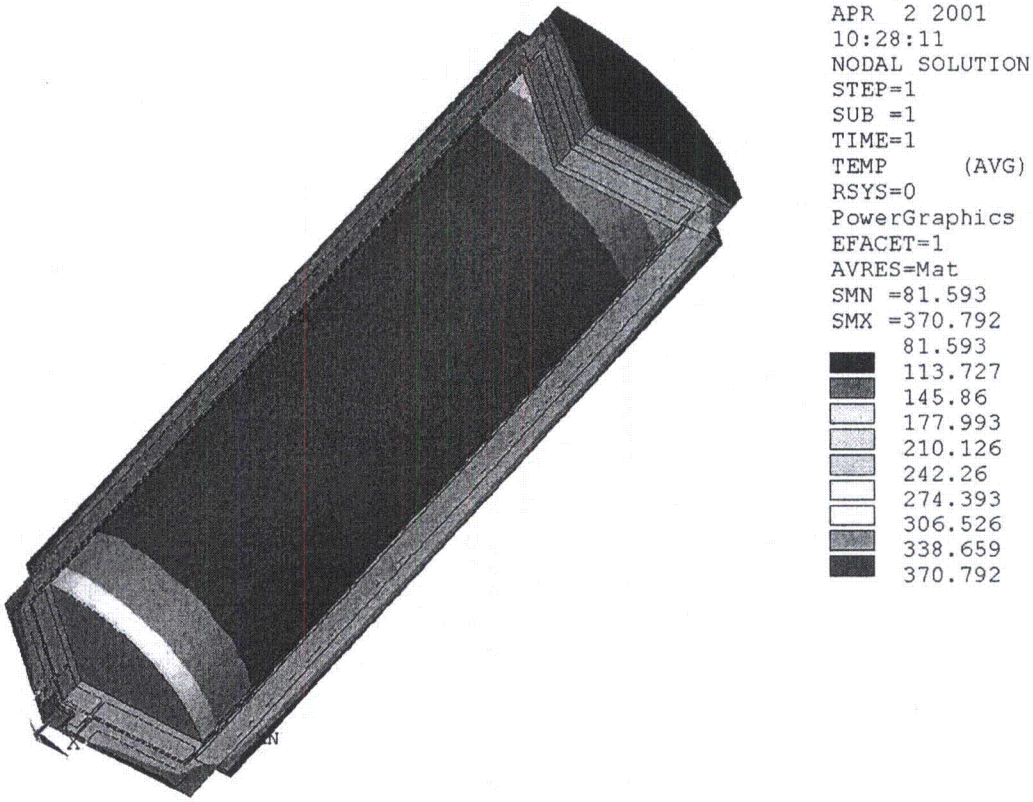

Basket Model

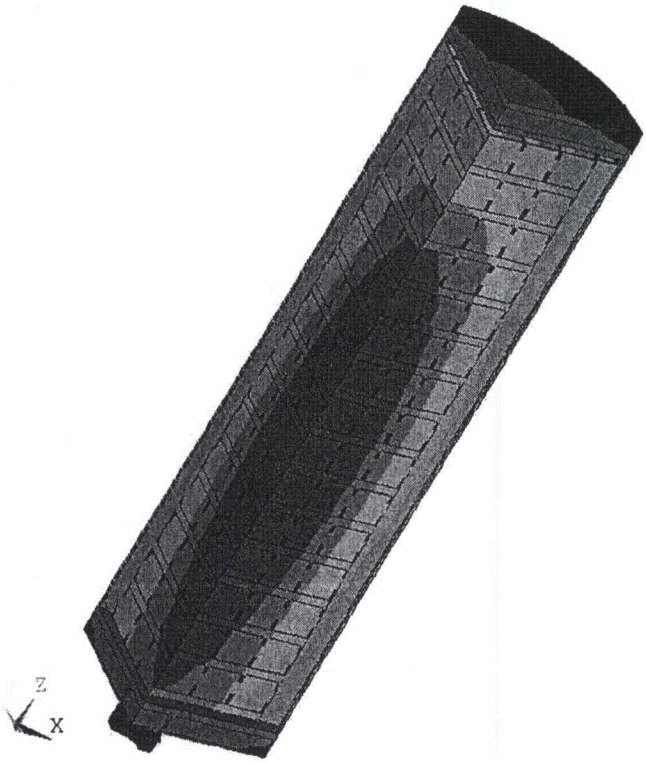

ANSYS 5.6
APR 2 2001
10:35:54
NODAL SOLUTION
STEP=1
SUB =1
TIME=1
TEMP (AVG)
RSYS=0
PowerGraphics
EFACET=1
AVRES=Mat
SMN =205.964
SMX =638.173

205.964
253.988
302.011
350.034
398.057
446.08
494.103
542.126
590.15
638.173
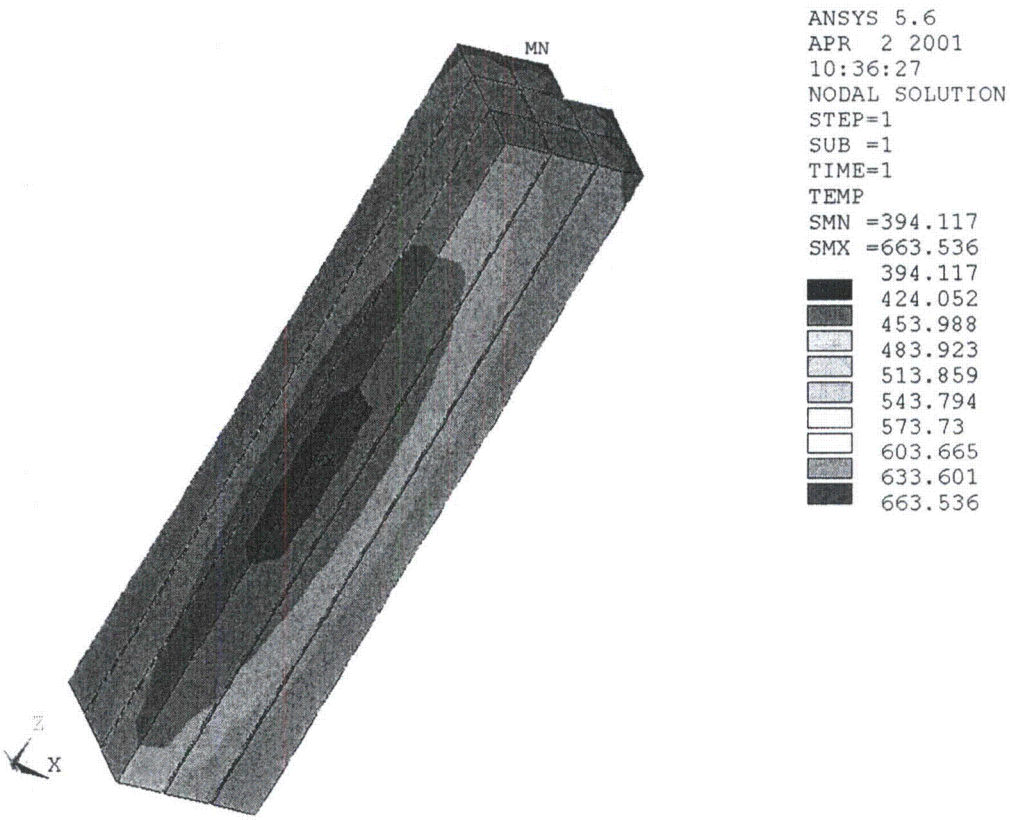
Fuel Assemblies