FORM 1, ECP COVER SHEET

ECP Supp No.: **ECP-10-000208** **Rev. No.:** **0000**

A. INITIATION – ENGINEERING SERVICE REQUEST (ESR)

ESR No.: ESR-09-003787 ☐ N/A

Originator/Ext/Date: _____
Printed Name

Site (check one): ☒ CCNPP ☐ NMP ☐ REG
☒ UNIT 1 ☒ UNIT 2 ☐ COMMON ☐ ISFSI

Requested Due Date and Reason:

System: 009 Priority: Routine

Equip ID: 1LIT1100, 1LIT1101A, 1LIT1101B, 1LIT1201A, 1LIT1201B, 1LIT1301B, 1LIT1401B, 1LIT1501B, 1LIT1601B, 2LIT2101B, 2LIT2201B, 2LIT2301B, 2LIT2401B, 2LIT2501A, 2LIT2501B, 2LIT2601A, 2LIT2601B, 2LIT2100, 1LI1100, 2LI2100

ER Component Classification ☐ Critical ☒ Significant ☐ Economic ☐ RTF ☐ N/A

WO No.: CR No. CR Category:

Is this a request for a Temporary Change? ☒ Yes ☐ No

Is this a request for Generic Engineering? ☐ Yes ☒ No

Reasons for Request/Problem Statement/Proposed Changes:

This change installs nine (9) radar probes per unit with local indication to monitor intake structure level. At each unit intake structure, six (6) probes are installed downstream of the traveling screens, one (1) is installed upstream of the trash rakes, and two (2) are installed between the traveling screens and the trash rakes. This change provides a temporary local indication of level to meet a plant commitment. A permanent change installed per ECP-10-000209 uses radar probes installed in this change to provide remote indication of water levels to the control room.

☐ Check if additional sheets are attached (mark sheets with ECP No., Supplement and Rev. No., as applicable)

APPROVAL: _____ Date: _____
Originator's Supervisor / Workgroup Lead

TRB APPROVAL (New MODS and some EQVs (Section 5.2.B) require TRB approval.) ☐ N/A

TRB Approval Meeting Date:

☐ Standby 20/40 List Date:

☒ Active 20/40 List Date: 9/16/2009

Account No.: N02711

FORM 1, ECP COVER SHEET
(Page 2 of 5)

ECP Supp No.: ECP-10-000208 **Rev. No.:** 0000

B. INITIAL ENGINEERING SCREEN AND ASSIGNMENT ☐ N/A

PRELIMINARY SERVICE TYPE DETERMINATION

☐ Engineering Response		☐ Administrative Document Change	
☐ Engineering Evaluation		☐ Equivalent Change	
☐ Commercial Change	☐ DC ☐ EQV	☒ Design Change	☒ Modification ☐ Setpoint ☐ Document Change

RESPONSIBLE ENGINEER: SUPERVISOR:

SYSTEM ENGINEERING REVIEW/APPROVAL ☐ N/A

System Engineer/Supervisor Brad Wright ☐ Approved ☐ Disapproved
(Printed Name/Signature)

☐ Check if additional sheets are attached (mark sheets with ECP No., Supplement and Rev. No., as applicable)

C. FINAL SERVICE

SERVICE CLASSIFICATION: ☐ SR ☒ NSR ☐ Augmented Quality

☐ Generic Engineering		☒ Temporary Change	

SERVICE PERFORMED (check one)

☐ Engineering Response		☐ Administrative Document Change	
☐ Engineering Evaluation		☐ Equivalent Change	
☐ Commercial Change	☐ DC ☐ EQV	☒ Design Change	☒ Modification ☐ Setpoint ☐ Document Change

COMMENTS

ORIGINAL FORM 1 WITH SIGNATURES ON PG 1 + 2 COULD NOT BE LOCATED

ECP Supp No.: **ECP-10-000208** **Rev. No.:** **0000**

ECP RISK SCREENS

Technical Task Risk Rigor Assessment (CNG-CM-1.01-2000) :

Assessment required: ☒ YES ☐ NO (If "NO" proceed to QRT Risk Ranking)

Consequence Risk Factors Identified: ☒ YES ☐ NO

If "YES," complete Human Performance and Process Risk Evaluations and any additional actions required by CNG-CM-1.01-2000. Include summary of results in ECP. – **Attachment 12**

If "NO," proceed to QRT Risk Ranking

Independent Third Party Review Screen Results: ☐ 1 ☐ 2 ☐ 3 ☒ 4

Third Party Review Required: ☐ YES ☒ NO IF YES, TYPE:

Third Party Review Completed: ☐ YES ☐ NO ☒ NOT REQUIRED

QRT Risk Ranking (CNG-CM-1.01-1000): ☐ Red ☐ Yellow ☐ Green ☒ N/A

ECP SUPPLEMENT INVENTORY

Inventory all Forms and attachments, issued with this ECP Supplement, which do not have unique document identification numbers. Ensure all products issued with unique document identification numbers are electronically linked to the ECP Supplement in FCMS.
Form # refers to CNG-FES-015 form numbers unless otherwise specified.

	Form #	Title	Number of Pages	Comments
☒	Attach. 12	Design Inputs and Change Impact Screen	14	CNG-CM-1.01-1003, Att 12
☐	6	EQV Technical Evaluation		
☒	7	Design Change Technical Evaluation	2	
☒	7A	DC Technical Evaluation Continuation	6	
☐	7B	DC Technical Evaluation Continuation		
☒	8	Operational Impact Statement	2	
☒	9	Installation and Testing Requirements	10	
☒	11	ECP Material List	1	
☐	12	Engineering Evaluation		
☒	13	Record of Walkdown	2	
☒	16	Fire Protection/Appendix R Review Electrical Design Features Checklist	2	
☒	17	Fire Protection/Appendix R Review Fire Protection Design Features Checklist	2	
☐	18	Design Review For ALARA Good Practices		
☐		10 CFR 50.59/72.48 Screen		CNG-NL-1.01-1011, Att 2
☐				
☐				
☐				
☐				
☐				
☐				
☐				

TO/CO Plan No.: 201000229

FORM 1, ECP COVER SHEET
(Page 4 of 5)

ECP Supp No.: **ECP-10-000208** **Rev. No.:** **0000**

REVIEW AND APPROVAL – Sargent & Lundy LLC:

Responsible Engineer: David J. Goode (S&L) — 5/3/10
(Printed Name and Signature) — Date:

(If Required) Professional Engineer: ☒ N/A
(Printed Name, Signature, and Requal Date) — Date:

Is Design Verification Required? ☐ Yes ☒ No

If yes, Design Verification Form is ☐ Attached ☐ Filed with:

Independent Reviewer: Angelo A. Emanuele (S&L) — 5/3/10
(Printed Name and Signature) — Date:

Additional Preparer	Jeff J. Grajewski (S&L)	5/3/10
	Printed Name and Signature	Date
Additional Reviewer	Carol D. Frantilla	5/3/10
	Printed Name and Signature	Date
Additional Reviewer	N/A	
	Printed Name and Signature	Date
Approved	Dan M. Wright	5/5/2010
	Printed Name and Signature	Date

ECP Cause Code (Section 5.1.l): O

FORM 1, ECP COVER SHEET
(Page 5 of 5)

ECP Supp No.: **ECP-10-000208** **Rev. No.:** **0000**

IMPLEMENTATION REVIEW/APPROVALS ☒ N/A (if not required)

Engineering Manager: SR SANDERS for JJ Stanley Date: 5/6/10
(Printed Name and Signature)

PORC/PLANT GENERAL MANAGER REVIEW/APPROVALS ☒ N/A (if not required)

PORC Meeting No.:

_____ Date: _____
(Printed Name and Signature)

PORC Chairman: _____ ☐ Approved ☐ Disapproved
(Printed Name and Signature)

Plant General Manager: _____ ☐ Approved ☐ Disapproved
(Printed Name and Signature)

ECP Supp No.: **ECP-10-000208** **Rev. No.:** **0000**

Sect	Design Input or Change Impact	Applicable Yes	Applicable No	Action Tracking
CNG-FES-007, Preparation of Design Inputs and Change Impact Screen, shall be used in preparation of Attachment 12. CNG-FES-007 provides detailed screening questions for each section of this screen to assist in determining the correct overall screening result for each topic. The column titled "Sect" refers to the applicable section of CNG-FES-007. CNG-FES-007 also provides recommended actions for any "Yes" answers. Review and approval of attachment 12 is indicated by review and approval of the ECP.				
5.4.1	**Mechanical/Civil/Structural Design:** Does the Engineering Change involve any Mechanical System characteristics where design limits are placed on the mechanical properties of a system or components? Does the Engineering Change involve any Civil/Structural requirements where limits are placed on the structural properties of an SSC such as equipment foundations and component supports? **[FB0241]**	☒	☐	
A mechanical assembly is required for radar probe mounting in existing penetrations. In addition, since the man holes are located in the open, the electronics modules protrude above ground and are exposed to weather and other hazards from personnel working in the area. For this reason, a protective structure is also designed around the probe to prevent damage. See Form 7/7A for evaluation of this design. To install conduit for radar probes 1LIT1100, 1LIT1101B, 1LIT1201A, 2LIT2501A, 2LIT2601A, and 2LIT2100, concrete must be cut in the intake structure. See Form 7/7A for an evaluation of the structural integrity of the intake structure per this change.				
5.4.1.1	**Containment Sump Recirculation Issue (CCNPP and Ginna, only):** Does the Engineering Change affect inputs or assumptions made in containment sump testing and analysis? Does the Engineering Change affect or impact commitments in response to Generic Letter 2004-02?	☐	☒	
5.4.1.2	**Managing Gas Accumulation in Emergency Core Cooling, Decay Heat Removal, and Containment Spray Systems:** Does the Engineering Change involve the potential introduction of gas into the Emergency Core Cooling System, the Decay Heat Removal System, or the Containment Spray System or involve the potential failure of managing gas accumulation in the subject systems? **[FB0509]**	☐	☒	
5.4.2	**Valves:** Does the Engineering Change involve or impact motor operated valves, air operated valves, relief valves or check valves? Does the Engineering Change involve or affect valve packing?	☐	☒	
5.4.3	**Flooding:** Does the Engineering Change impact or affect internal or external flooding analysis?	☐	☒	

ECP Supp No.: **ECP-10-000208** **Rev. No.:** **0000**

Sect	Design Input or Change Impact	Applicable Yes	Applicable No	Action Tracking
5.4.4	**HVAC:** Does the Engineering Change impact or affect HVAC or HVAC loading?	☐	☒	
5.4.5	**Thermal Fatigue:** Does the Engineering Change affect SSCs or piping in the Thermal Fatigue Program?	☐	☒	
5.4.6	**Control Room Habitability:** Does the Engineering Change impact Control Room Habitability? **[FB0243]**	☐	☒	
5.4.7	**Seismic:** Does the Engineering Change add, relocate, or alter Seismic Category I mechanical and/or electrical components that impact the Seismic Qualification?	☒	☐	
This change installs non-safety related components in the intake structure. The radar probe mountings were evaluated for Seismic Category II over I criteria in Form 7/7A, Design Change Technical Evaluation.				
5.4.8	**Structural Barriers:** Does the Engineering Change impact or change the functional performance of any plant structural barrier?	☐	☒	
5.4.9	**Coatings:** Does the Engineering Change require the application or removal of a protective coating or change any coating specifications or procedures?	☐	☒	
5.4.10	**Electrical/I&C Design:** Does the Engineering Change involve any Electrical requirements where limits are placed on the electrical properties of a system or components? Does the Engineering Change involve any Instrument Control requirements, including digital technology requirements? **[FB0242] [FB0255]**	☒	☐	
This change installs a total of 18 radar level probes (9 per unit) at penetrations in the intake structure. See Form 7/7A for technical evaluation of these components. Power to all radar level probes is supplied via temporary 24Vdc power supplies installed centrally to probe locations. Junction boxes are installed to distribute power wiring. See Form 7/7A for power supply evaluation. Each radar probe comes with a local indicator that relies on firmware for setup. A Cyber Security Assessment shall be performed in accordance with 201000229 Form 10, Turnover Closeout Plan. Temporary conduit is installed per this change for power cable for radar probes that are installed upstream of the traveling screens. See Form 7/7A for further evaluation of conduit.				

ECP Supp No.: **ECP-10-000208** **Rev. No.:** **0000**

Sect	Design Input or Change Impact	Applicable Yes	Applicable No	Action Tracking
5.4.10.1	**Transmission System Impacts:** Does the Engineering Change impact the transmission system?	☐	☒	
5.4.11	**10CFR50.49 Environmental Qualification:** Is the Environmental Qualification (EQ) of equipment is affected?	☐	☒	
5.4.12	**Human Factors:** Are there any Human Factors requirements introduced by the Engineering Change?	☐	☒	
5.4.13	**Station Blackout:** Does the Engineering Change impact any station blackout analysis or procedures?	☐	☒	
5.4.14	**Reactivity, Nuclear Fuels:** Is there any impact on nuclear fuel, core components, core design, reactivity management, criticality control and accountability of nuclear materials as well as transient and /or accident analysis? **[FB0247] [FB0252]**	☐	☒	
5.4.15	**[NMP Only] BWR Vessel Internals Program (BWR VIP):** Does the Engineering Change impact the BWR Vessel Internal Program?	☐	☒	
5.4.16	**Fire Protection/Appendix R:** Does the Engineering Change affect any fire protection/suppression equipment, change combustible loading, or impact the Fire Protection Program? Does the Engineering Change impact the plant's ability to safely shutdown in the event of an Appendix R Fire?	☐	☒	
All components installed per this change are located outside the plat and do not have any fire protection requirements. However, cable installed should comply with IEEE 383 standards at the recommendation of the fire protection engineer. See forms 16 & 17 as required.				
5.4.17	**PRA:** Does the Engineering Change affect the existing Probabilistic Risk Assessment (PRA), Mitigating System Performance Index (MSPI) Basis Document PRA content, and shutdown risk models?	☐	☒	
5.4.18	**NFPA 805:** Does the Engineering Change impact the analysis or assumptions of the NFPA-805 Program?	☐	☒	

ECP Supp No.: **ECP-10-000208** **Rev. No.:** **0000**

Sect	Design Input or Change Impact	Applicable Yes	Applicable No	Action Tracking
5.4.19	**Safety Classification:** Does the Engineering Change require a change in safety classification or category for any SSC?	☒	☐	
This change adds new components as defined in Form 7/7A Design Change Technical Evaluation.				
5.4.20	**Equipment Database(s):** Does the Engineering Change require changes to the equipment technical database(s)?	☒	☐	
Radar probes installed are given CompIDs and added to the FCMS database per this change. See form 7/7A for a list of CompIDs and descriptions. Cables installed are temporary and not scheduled. Therefore, this change does not impact CRS.				
5.4.21	**Equipment Reliability**: Does the engineering Change add, remove or modify equipment with critical functions or require classification of new equipment to determine equipment reliability classification?	☒	☐	
The radar level probe system was chosen based on successful demonstration at CCNPP. However, since these are new components, an equipment reliability classification shall be performed at project closeout per 201000229 Form 10, Turnover Closeout Plan.				
5.4.22	**SPV:** Does the Engineering Change impact single point vulnerability (SPV) so as to add to the potential to cause an unplanned reactor SCRAM?	☐	☒	
5.4.23	**Maintenance Rule:** Does the Engineering Change impact maintenance rule SSCs or impact the Maintenance Rule Program?	☐	☒	
5.4.24	**EPIX:** Does the Engineering Change affect the existing Equipment Performance Information Exchange (EPIX) database?	☐	☒	
5.4.25	**License Renewal:** Does the Engineering Change potentially impact the results or conclusions of a License Renewal Aging Management Review, Aging Management Program, or Time Limited Aging Analysis or affect any License Renewal Commitment?	☐	☒	
5.4.26	**IST/ISI Program:** Does the Engineering Change result in changes in plant configuration, calculations, or safety analyses that may create or eliminate safety functions which fall within the scope of the IST/ISI program, or require changing surveillance test/acceptance criteria?	☐	☒	

ECP Supp No.: **ECP-10-000208** **Rev. No.:** **0000**

Sect	Design Input or Change Impact	Applicable Yes	Applicable No	Action Tracking
5.4.27	**FAC:** Does the Engineering change have the potential to impact the Flow Accelerated Corrosion program?	☐	☒	
5.4.28	**Thermal Performance:** Does the Engineering Change plant efficiency or electrical megawatt output or their measurement in a way that may impact thermal performance monitoring?	☐	☒	
5.4.29	**Appendix J:** Does the Engineering Change modify any containment penetration or containment leakage criteria in a manner that will impact the Appendix J Program?	☐	☒	
5.4.30	**Boric Acid Program Impact:** Will any new component or system by added or installed near a boric acid system or a credible boric acid leak path?	☐	☒	
5.4.31	**Periodic and Surveillance Testing:** Does the Engineering Change necessitate changes to periodic or surveillance testing?	☐	☒	
5.4.32	**System Engineering:** Does the Engineering Change require active involvement on the part of System Engineering?	☒	☐	
This change adds new components for level monitoring. The system engineer has been engaged in the design and operation of these components installed in the intake structure.				
5.4.33	**ALARA:** Are Radiation Protection/ALARA programs impacted by the Engineering Change that affect any of the following during normal or post accident conditions: Radiation sources, changes affecting controlled radiation areas, primary coolant fluid systems (Cobalt Materials); contaminated systems; radiation monitoring systems; HVAC Systems which could transport airborne contaminants; change or alter shielding?	☐	☒	
This change is installs equipment located outside and not exposed to radiation.				
5.4.34	**Environmental Impacts:** Are there environmental conditions and impacts affected by the Engineering Change?	☐	☒	

ECP Supp No.: **ECP-10-000208** **Rev. No.:** **0000**

Sect	Design Input or Change Impact	Applicable Yes	Applicable No	Action Tracking
5.4.35	**Emergency Preparedness:** Does the Engineering Change potentially impact the existing Emergency Plan or environmental or discharge monitoring that are used to prevent undue risk to public health and safety?	☐	☒	
5.4.36	**FSAR/Tech Spec/TSB/Regulatory Commitments:** Does the change alter any statement or commitment in the UFSAR (A thorough review of the UFSAR is required)? Does the change result in non-compliance with the Technical Specifications or the Technical Specifications' Bases? Does the change modify or delete any regulatory commitment?	☐	☒	
5.4.37	**Security:** Does the Engineering Change involve any Security procedures or requirements such as site monitoring, alarm systems, vehicle barrier systems, security and security lighting?	☐	☒	
5.4.38	**NEIL:** Does the Engineering Change have any impact on the requirements of any applicable Nuclear Electric Insurance Limited (NEIL) Insurance Standard, or other appropriate insurance standards? **[FB0244] [FB0245]**	☐	☒	
5.4.39	**Information Technology:** Does the Engineering change affect plant systems computer hardware, firmware, software, or data or analytical software used in the design or analysis of plant systems, structures, or components? Does it modify or add a digital device in a plant system?	☒	☐	
Cyber Security Assessment shall be performed for firmware on each probe per 201000229 Form 10, Turnover Closeout Plan.				
5.4.40	**Industrial Safety:** Are there any Industrial Safety requirements such as restricting the use of dangerous materials, hazardous chemicals, escape provisions from enclosures, pertinent OSHA requirements, and grounding of electrical systems?	☒	☐	
Radar probes are installed in penetrations that are in traffic areas on the intake structure. The probes protrude up from the cement structure and create a walking hazard. A protective cover is designed to protect the radar probes, but shall also be externally marked to bring attention to personnel in the area to avoid a tripping hazard. In addition, installation requires opening of metal grating upstream of the traveling screens. Fall protection requirements shall be implemented during this installation.				

ECP Supp No.: **ECP-10-000208** **Rev. No.:** **0000**

Sect	Design Input or Change Impact	Applicable Yes	Applicable No	Action Tracking
5.4.41	**Margin:** Does Engineering Change reduce design or operating margin or address an existing margin issue identified on the station Low Margin List?	☐	☒	
5.4.42	**Operating Experience (OE):** Are there any applicable Operating Experience listed on the INPO internet site or equivalent sources that are applicable to this Engineering Change? **[FB0242] [FB0246] [FB0247]**	☐	☒	
An OE search on the INPO website resulted in several hits relating to intake structure level. However, all of these events were associated with the circulation pump control and SCRAM aspect due to decreased level. This change only provides local indication of intake structure level and does not include any control or reactor SCRAM functions. Operating Experience OE27386 is for spurious alarms caused by Ohmart-Vega VEGAPULS 65 radar transmitter installed to measure Caustic Storage Tank Level. The cause of this event was splashing the radar probe with sodium hydroxide during filling. A solution from the vendor was to adjust the signal-to-noise ratio for the transmitter so it remains stable during splashing or unstable tank event. For this change, the vendor has demonstrated the performance on-site for this application dealing with foaming and it has been found to be acceptable by CCNPP personnel. An additional result of the OE is the vendor discovered multiple echoes due to the fact that the measurement is in an enclosed tank. Since this change is not an enclosed tank, this is not a concern with relation to the transmitter location and mounting.				
5.4.43	**Training:** Are there any changes to or additional training requirements required by the Engineering Change? **[FB0252]**	☒	☐	
Ohmart/Vega radar probes are new components to CCNPP. Personnel shall be trained for the operation and setup of these components per TRR CCNPP-2010-351 as required in 201000229 Form 10, Turnover Closeout Plan.				
5.4.44	**Simulator:** Does the Engineering Change necessitate any changes to simulator hardware, programming, labels, programming, or training requirements?	☐	☒	
5.4.45	**Procedures:** Are there any procedure changes caused by the Engineering Change?	☒	☐	
This change installs new components for monitoring intake structure level. Impacts to existing plant procedures are to be determined by CCNPP per 201000229 Form 10, Turnover Closeout				
5.4.46	**Operational Impact:** Does the Engineering Change potentially change any Operational Requirements?	☐	☒	
5.4.47	**Load Handling:** Does the Engineering Change impact any load handling procedures or load path analysis; are there any specific load handling requirements for installation, implementation, or removal associated with the Change?	☐	☒	

ECP Supp No.: **ECP-10-000208** **Rev. No.:** **0000**

Sect	Design Input or Change Impact	Applicable Yes	Applicable No	Action Tracking
5.4.48	**Personnel:** Are there any Personnel Requirements and Limitations associate with the Engineering Change, such as the need for trade specialists and engineering experts as well as support personnel, such as Radiation Chemistry technicians, welding technicians with special expertise, use of specific contractor or station procedures for installation or the need for mock-ups for training, installation, or operation?	☐	☒	
5.4.49	**Special Procedures & Specifications:** Are there any special procedures and installation specifications that apply, but are not part of the normal installation procedural direction?	☐	☒	

ECP Supp No.: **ECP-10-000208** **Rev. No.:** **0000**

Sect	Design Input or Change Impact	Applicable Yes	Applicable No	Action Tracking
5.4.50	**Impacted Organizations:** Does the Engineering Change impact any interfacing departments such as Operations, System Engineering, Training (including Plant Simulator), Maintenance, Reactor Engineering, Radiation Protection and others?	☒	☐	

Indicate the organizations that may be impacted by the proposed activity by checking the appropriate boxes. Use blanks for unlisted organizations or individuals.

Engineering			
☒	Mechanical/Civil Design Engineering	☒	Systems Engineering
☒	Electrical/I&C Design Engineering	☐	Engineering Programs
☐	Nuclear Fuel Services	☐	Fire Protection Engineer
☒	Engineering Equipment Reliability	☐	Appendix R Engineer
☒	Procurement Engineering	☐	
☐		☐	

Other Organizations			
☒	Operations	☒	Maintenance – E&C
☐	Chemistry	☐	Planning – Mechanical
☐	Licensing	☒	Planning – E&C
☐	Rad Protection	☒	PDU
☒	Maintenance – Mechanical	☒	Nuclear Training
☐	Maintenance Support	☐	
☐	Outage Management	☐	
☐		☐	

5.4.51	**Walkdown Requirements:** Determine the need for walkdowns to look at accessibility to the work area(s) and any special installation considerations that need to be addressed during design development	☒	☐	

☒ 10% (pre-design) ☐ Turnover
☐ 50% ☐ Other (Specify)_____
☒ 90% (post-design; prior to ECP approval) ☒ Other (Specify) Designer Walkdown for Layout

5.4.52	**Design Progress Meetings:** Determine the need for design progress meetings during design development	☒	☐	

☒ 10% (pre-design) ☐ Other (Specify)_____
☐ 50% ☐ Other (Specify)_____
☒ 90% (post-design; prior to ECP approval) ☐ Other (Specify)_____

ECP Supp No.: **ECP-10-000208** **Rev. No.:** **0000**

Sect	Design Input or Change Impact	Applicable Yes	Applicable No	Action Tracking

Waiver of Required Walkdowns or Design Progress Meetings: Step 5.3F.5.f allows for waiver of any Walkdown or Design Progress Meeting required by Step 5.3F. Rationale for and approval of such waivers shall be documented in this space:

Approval: _____ _____
Printed Name & Signature **Date**

The space below may be used for documenting any additional results of the Responsible Engineer/Engineering Supervisor Initial Meeting (Record notes, decisions, and actions)

Technical Task/Risk-Rigor Assessment

Page 1 of 1

Attachment 1, Determination of Consequence Factors

HIGH CONSEQUENCE – If the change is not correctly evaluated and addressed, can it result in:	**YES**	**NO**
Personal injury, safety issue • Hot environment / heat stress • Diving activities • Hazardous materials • Radiological Hazards >1 Rem for job, Dose rate > 1 Rem/hr. • Any unmonitored release	☐	☒
Reactivity Management Event	☐	☒
Scram	☐	☒
Operability issue involving multiple trains of a safety related system operability	☐	☒
Unplanned Safety System Actuation/Loss	☐	☒
MEDIUM CONSEQUENCE – If the change is not correctly evaluated and addressed, can it result in:	**YES**	**NO**
Regulatory non-compliance (environmental, NRC, State)	☐	☒
Lost/limited Generation (≥5%)	☐	☒
Adverse impact on outage (≥2 hours) or project critical path	☐	☒
Operator Workaround or Challenge created or not addressed	☐	☒
Introduction of foreign material	☐	☒
Reactor coolant or steam generator chemistry transient outside of acceptable band.	☐	☒
Operability Issue involving one train of safety related equipment	☐	☒
Tech Spec violation	☐	☒
Reportable environmental consequence or violation	☐	☒
LOW CONSEQUENCE – If the change is not correctly evaluated and addressed, can it result in:	**YES**	**NO**
Unplanned Component Unavailability	☐	☒
Unbudgeted financial consequences (≥$50K)	☐	☒

ECP Supp No.: ECP-10-000208 **Rev. No.: 0000**

Sect	Design Input or Change Impact	Applicable Yes	Applicable No	Action Tracking	
	Unplanned entry into a Tech Spec shutdown LCO			☐	☒
	Unplanned Security vulnerability			☐	☒
	Aggregate review: Are there any activities, conditions, or situations that, when combined with this activity, could cause undesirable consequences?			☐	☒
	Repeat functional failure of Maintenance Rule systems, structures or components with potential to create new (a)(1) system.			☐	☒
	Unplanned Fire Protection Vulnerability • Emergency Plan affected • High sensitivity issue with public or Regulator			☐	☒
	Other unacceptable consequence not listed • Security compensatory actions • Fire protection compensatory actions • Emergency plan affected • NPDES permit affected • High sensitivity issue with public or regulator. • Potential adverse reduction in safety or production margins • Other			☐	☒

Attachment 2, Determination of Risk Factors

HUMAN PERFORMANCE RISK FACTORS – Is the likelihood of a technical error increased by:	*YES*	*NO*
Overconfidence/complacency, "can-do" attitude	☐	☒
Mental state (such as stress, illness, fatigue)	☐	☒
Conflicts (personality)	☐	☒
Knowledge/experience, low proficiency lack of skills/training/qualification.	☐	☒
First time or non-routine evolution	☐	☒
Method changed or new process/procedure	☐	☒
Infrequently performed	☐	☒
Frequently performed (habit intrusion), repetitive actions or monotony	☐	☒
High Complexity	☐	☒
Inadequate information available/problem not clearly understood	☐	☒
Availability/complexity of tools	☐	☒
Group think, lack of independence	☐	☒
High workload/schedule pressure	☒	☐
Distraction/interruptions	☐	☒
Availability of resources (people)	☐	☒
Unclear goals, roles, responsibilities	☐	☒
Lack of or unclear standards	☐	☒
Omission/failure to revise required document	☐	☒
Other issues:	☐	☒
PROCESS RISK FACTORS	**YES**	**NO**
Is the exact scope of the task NOT completely understood?	☐	☒
Are there parts of the task process/procedure that cannot be followed? Are we Out-Of-Process (OOPS)? Are there parts of the task the current process does not address?	☐	☒
Are parts of the process or task not understood, unclear, or controversial	☐	☒
Is task on a fast track?	☒	☐

ECP Supp No.: ECP-10-000208 **Rev. No.: 0000**

Sect	Design Input or Change Impact	Applicable Yes	Applicable No	Action Tracking
	Is an outside organization, including external design organizations and equipment vendors, providing significant inputs?	☒	☐	
	Are the critical parameters NOT known?	☐	☒	
	Are all the tools, programs, and procedures necessary for the task NOT available and useable?	☐	☒	
	Is design basis NOT known?	☐	☒	
	Are multiple parties or disciplines involved such that errors may be introduced via communication channels or coordination?	☐	☒	
	Is this a Station first-time action, configuration change or process:	☐	☒	
	Is this a First of a Kind task? Will the product or process result in operation outside of industry Operating Experience? Is it the first application of this technology or methodology in the nuclear industry?	☐	☒	
	Other factors not listed:	☐	☒	
	TOTAL number of applicable Risk Factors	3		

(Medium Consequence) and (<=3 Risk Ranking Factors) = Requires normal review by station.

Attachment 4, Technical Task Pre-Job Brief Form

Supervisor Performing Brief: Brad Wright	**Date of Brief: 4/8/2010**
Participants: David Dvorak – CCNPP **David Goode – S&L**	**Document/Task ID:** **ECP-10-000208**
Task Description: **Intake Structure Level Radar Probe Installation – Temporary Installation**	
Resources and Estimated Time to Complete:	**Task Due Date/Time: 4/30/2010**

Minimum Briefing Expectations	**Key Briefing Points**
Define Scope: Clearly define the task and what the task entails (scope). Discuss how the scope of the task was validated.	Install 18 radar level probes (9 per unit) at the intake structure for level monitoring. Each unit will have 6 installed downstream of the traveling screens and 1 upstream of the trash rakes. Additionally, a probe is installed on the bay side of traveling screens 11B and 12A (Unit 1) and 25B and 26A (Unit 2). All radar probes will provide local level indication, except those installed upstream of the trash rakes. These probes will have a remote indicator mounted near the transmitter.
Roles and Responsibilities: Clearly define roles and Responsibilities (such as performer, preparer, checker, independence of verifier, project coordinator, corporate, Non Station Personnel).	Design to be prepared by S&L In-house RE is Dave Dvorak
Critical Parameters: Assumptions, inputs, or requirements that if allowed to be untrue or not met, would adversely affect the task outcome.	None
Procedure/Standards: Discuss and ensure proper understanding of the procedures and standards applicable to the task (such as	CNG-CM-1.01-1003 Rev 02 (Design and Config.) CNG-CM-1.01-1004 Rev 00 (Temp Change Process)

ECP Supp No.: ECP-10-000208 **Rev. No.: 0000**

Sect	Design Input or Change Impact	Applicable Yes	Applicable No	Action Tracking
Equipment Reliability, Configuration Control, Standards, and Industry Codes & Standards) Bring copy (copies) of governing process procedure for the task to the brief.	CNG-CM-1.01-2003, Rev 00 (Owner Acceptance) List all output products (ECN, etc) RE to develop Forms			
Training and Qualification: Review personnel qualifications. Establish appropriate mentoring and oversight of appropriate.	None			
Lessons Learned: Discuss previous lessons learned and experience (Operating Experience, Corrective Action Program & individual) that may be applicable to this task, particularly those involving human performance errors.	Clearly identify mounting details and ensure hardware specified on BOM is consistent with mounting.			
Fundamentals: Discuss applicable fundamentals.				

Attachment 4, Technical Task Pre-Job Brief Form (Continued)

Additional Briefing Topics validate the risk factors chosen with the briefing members.

Consequence Mitigation: For each consequence factor identified in Attachment 1, list the factor and the actions to be employed.

Consequence Factors	Compensating Action	Owner	Due Date
NONE			

Human Performance Risk Mitigation: For each human performance risk factor identified in Attachment 2, list the factor and the actions to be employed to mitigate that risk.

Risk Factors	Compensating Action	Owner	Due Date
High workload/schedule pressure **(late design start – required for 6/1 commitment)**	**1. S&L to use resources in Chicago** **2. Coordinate CCNPP project team for design inputs and review.**	**1. Goode** **2. Wright**	**1. 4/30/2010** **2. 4/30/2010**

Process Risk Mitigation: For each process risk factor identified in Attachment 2, list the factor and the actions to be employed to mitigate that risk.

Risk Factors	Compensating Action	Owner	Due Date

ECP Supp No.: **ECP-10-000208** **Rev. No.:** **0000**

Sect	Design Input or Change Impact		Applicable Yes	Applicable No	Action Tracking
Project on a fast track	**1. Parallel reviews by S&L and CENG** **Supplemental reviewers** **2. Owner Acceptance Review process**	**1. Goode** **2. Wright**			**1. 4/30/2010** **2. 4/30/2010**
Outside Design Organization	**Communicate with vendor to confirm operation and setup of radar probes**	**Goode**			**4/30/2010**

Attachment 4, Technical Task Pre-Job Brief Form (Continued)

Required?	Follow-up Action	Owner	Date	Tracking Mechanism
Yes	Progress update	**S&L**	**Weekly**	**Project Schedule**
Yes	10% / 50% / 90% reviews	**S&L**	**As scheduled**	**Project Schedule**
No	ITPR or CRB			
No	Additional Pre-job Brief			
No	Other (specify)			

FORM 7, DESIGN CHANGE TECHNICAL EVALUATION

ECP Supp No.:	ECP-10-000208	Rev. No.:	0000

1.0 PURPOSE: (CNG-FES-007, SECTION 5.3.1)

- *Provide an overview of the proposed activity and its interfaces.*

This change installs eighteen radar level probes (9 per unit) in the intake structure to monitor level. Twelve radar level probes (6 per unit) are installed downstream of the traveling screens in existing penetrations located on the intake structure. Four radar probes (2 per unit) are installed between the trash rakes and the traveling screens. These components each contain local indication for monitoring. An additional two radar probes (1 per unit) are located upstream of the trash rakes. These components are located under the intake structure grating and are not easily accessible for local monitoring due to safety requirements in proximity to the bay. As a result, remote indication modules are connected to these radar probes and installed on power racks located between traveling screens for monitoring. All radar probes are powered from 24Vdc power supplies (one per unit), distributed to each probe from local junction boxes also installed per this change.

Installation of this change is a temporary configuration for the radar probes. The permanent installation will provide remote indication back to the control room per ECP-10-000209.

2.0 FUNCTIONS: (CNG-FES-007, SECTION 5.3.2)

- *Basic functions of each structure, system, and component. (NQA-1, Question 1)*

The basic function of the radar probes is to provide local indication to monitor intake structure level. All components installed per this change are expected to operate during all plant modes. However, instrumentation is for monitoring purposes only and is not credited for any function during off-normal, abnormal, or emergency operation.

- *Interface requirements including definition of the functional and physical interfaces involving structures, systems, and components: (NQA-1, Question 7)*
  - *The effect on existing plant equipment capability, such as DC battery loads, AC bus capacity, available stored water inventory, service instrument air capacity, water systems capability (intake, service and component cooling water), and HVAC capability;*

    Instrumentation installed per this ECP is powered through temporary 24Vdc power supplies that receive 120Vac power from local welding carts located in closed, ventilated rooms near screens 14B (Unit 1) and 25A (Unit 2). Welding carts are to be supplied by CCNPP prior to implementation of this change. See Form 7A for evaluation of the power supply.

  - *The effect of cumulative tolerances in the design;*

    The changes associated with this ECP do not impact cumulative design tolerances.

  - *The effect on design and safety analyses to ensure the analytical bases remain valid;*

    Changes associated with this ECP do not impact the design of safety analyses.

  - *The compatibility with unimplemented design changes to specify any required sequence for implementation;*

    Changes associated with this ECP are not impacted by unimplemented design changes.

  - *Compatibility with Technical Specification requirements.*

    Changes associated with this ECP do not have any Technical Specification requirements.

3.0 FAILURE EFFECTS: (CNG-FES-007, SECTION 5.3.3)

- *Failure effects requirements of SSCs including a definition of those events and accidents which they must be designed to withstand. (NQA-1, Question19)*

Instrumentation installed per this change is not credited for monitoring in any design basis event or accident. A failure of a radar probe would only result in the loss of local intake structure level indication. Separate instrumentation is relied upon for control

ECP Supp No.: **ECP-10-000208** **Rev. No.:** **0000**

room indication of intake structure level and circulation pump control. Therefore, no failure effects requirements are associated with this change.

- *Reliability requirements of structures, systems, and components including their interactions, which may impair functions important to safety (NQA-1, Question 30)*

Instrumentation installed per this change is relied on for non-safety related local monitoring and does not interface with any systems or components providing control related to safety. Therefore, no equipment reliability requirements are associated with this change.

4.0 CODES, STANDARDS, REGULATORY REQUIREMENTS AND CLASSIFICATION: (CNG-FES-007, SECTION 5.3.4)

- *Codes and standards, regulatory requirements and commitments or responses to Federal, State, and Local Regulations (NQA-1, Question 3).*

1. IEEE STD. 383 – Qualifying Class 1E Electric Cables and Field Splices for nuclear Generating Stations, Rev. 2008
2. NFPA 70: NEC Handbook 2008
3. AWS D1.1, Structural Design and Welding
4. AISC Manual of Steel Construction, 7th Edition or later
5. ACI 318-63 Building Code Requirements for Reinforced Concrete

5.0 REFERENCES:

1. VTM 12335-030 - Ohmart-Vega Vendor Manual
   a. Tab 1 – VEGAPULS 65 Operating Instructions
   b. Tab 2 – PLISCOM Operating Instructions
   c. Tab 3 – VEGADIS61 Operating Instructions
2. Phoenix Contact Data Sheet 102050_01_en – Power Supply Unit, Primary Switch Mode

CONTINUATION

Design Change Technical Evaluation must include FORM 7A or FORM 7B or both.

☒ FORM 7A is attached

☐ FORM 7B is attached

☐ Additional Pages attached

ECP Supp No.:	ECP-10-000208	Rev. No.:	0000

6.0 DESIGN OPERATION AND PERFORMANCE REQUIREMENTS:

- *Performance requirements such as capacity, rating, system output (NQA-1, Question 2).*

  The maximum measurable range of the radar probes installed per this change is approximately 99 ft (Ref 1). Each radar probe is mounted around the 10' elevation and required to measure intake structure level which reaches a maximum depth at the (-) 26' (below sea level) elevation corresponding to the bottom of the intake structure at the traveling screens. Therefore, the maximum range needs to encompass at least 40' to allow for some margin in the measurement. Therefore, the range of the probes is acceptable with respect to the process.

  To satisfy a plant commitment, the probes must provide local indication of intake structure level. All radar probes are equipped with an integral display mounted on the top of each module. The exception is the two probes installed under the front of the intake structure upstream of the trash rakes. Due to safety requirements required to access these components for monitoring, each has an indicator routed back to power racks between the nearest set of traveling screens. This location does not have any special safety requirements and is easier for personnel to view. As a result, this change satisfies the plant commitment to install local level indication at the intake structure.

  No existing accuracy requirements are placed on intake structure level monitoring. However, resolution is 0.039 in. with a deviation of ± 0.394 in. per (Ref. 1). This shall be used for operations to determine impact of local indicators on procedures.

- *Design conditions such as pressure, temperature, fluid chemistry, and voltage. (NQA-1, Question 4)*

  Radar probes are 2-wire (loop powered) components powered by an external 24Vdc power supply. Each probe provides a 4-20mA output signal to its local indicator.

- *Loads such as seismic, wind, thermal, and dynamic; the cumulative effect of design changes on the analytical design basis. (NQA-1, Question 5)*

  See the structural requirements section below for an evaluation of the effects on loading due to this change.

- *Material requirements including such items as compatibility, electrical insulation properties, protective coatings, and corrosion resistance. (NQA-1, Question 8)*

  All components installed per this change, including mounting assemblies, junction boxes and cables are located outdoors on the intake structure and exposed to the elements. Stainless steel shall be used to fabricate mounting assemblies to prevent rusting. Junction boxes shall have a rating of NEMA 4 or better, and cables shall be outdoor type to withstand exposure to weather.

- *Mechanical requirements such as vibration, stress, shock, and reaction forces. (NQA-1, Question 9)*

  Each radar probe located downstream of the traveling screens is installed in an existing penetration using a mounting assembly designed per this change. The mounting assembly is made up of three sub-assemblies that are bolted together. The design of the assembly secures the radar probe to the intake structure, allows easy cable terminations and view of indication, and protects the radar probes from damage. Detailed drawings of the assembly and sub-assemblies can be found in Form 9, Installation and Testing Instructions.

- *Structural requirements covering such items as equipment foundations and pipe supports. (NQA-1, Question 10)*

  Water level monitoring instrumentation is to be mounted to the intake structure. Since the intake structure concrete is safety-related, these mountings will be analyzed per Seismic Category II over I criteria. The SSE loading condition will be conservatively considered with normal operating allowable loads. Unless noted otherwise, the peak acceleration is conservatively used to qualify the instrumentation supports, with 1% damping considered for SSE. The SSE accelerations are 1.875 x (6.20g) = 11.625g (use 11.7) horizontally and 1.875 x (0.51g) = 0.956g (use 1.0) vertically. Accelerations are taken from the response spectrum curves in Calculation No. CA04085 Attachment F, for the intake structure.

  Form 9 Installation sketches 001 and 002 depict the mounting of the VEGAPULS 65 radar sensor and PLICSCOM adjustment module through penetrations in the concrete. The combined weight of the radar sensor and the module is about 7 lbs. The critical element of the support is the 1" x 1" x 1/8" angle in the penetration. The total weight of the support is approximately 50 lb, and the actual natural frequency of the support is about 39 Hz, which is in the rigid zone of the response spectra curves. The corresponding ZPA for all the curves is below unity, which is much less than the conservatively assumed peak accelerations. Therefore, all components of the support are considered acceptable by Engineering Judgement based on the small magnitude of the seismic loads.

ECP Supp No.: ECP-10-000208 **Rev. No.: 0000**

Form 9 Installation sketch 003 depicts the mounting of the VEGAPULS 65 radar sensor and PLICSCOM adjustment module to the wall of the intake structure. The total weight of the equipment and mounting is approximately 17 lbs. Dead load plus peak SSE seismic load results in applied bending moments of Mx = 1000 in-lbs and My = 1000 in-lbs in the plane of the wall, and Mz = 826 in-lbs as a torsional moment perpendicular to the plane of the wall. These moments result in a maximum plate bending stress of 7.9 ksi, which is much less than the 22.5 ksi bending stress allowed for a stainless steel plate under normal operating loads. Thus, the plates are adequate for supporting the equipment. The 3/16" all-around fillet weld has a capacity of 2.98 kips/in, which is much greater than the applied dead plus SSE seismic weld stress of 0.73 kips/in. Therefore, the all-around fillet weld is acceptable. The dead plus SSE seismic tension in a single anchor is computed to be 427 lbs, while the dead plus SSE seismic shear in a single anchor is computed to be 140 lbs. Given the allowable tension load of 683 lbs and an allowable shear load of 1261 lbs, the linear interaction ratio for the anchors is 0.73 which is less than 1.0 and is therefore acceptable.

Form 9 Installation sketch 004 depicts the mounting of the VEGADIS 61 level indicator. The total weight of the equipment and mounting is approximately 30 lbs. The equipment is mounted to a ¼" thick backing plate. Applying dead load and peak SSE seismic loads and considering the backing plate acting in one-way bending results in a plate bending stress of 14.4 ksi, which is less than the 22.5 ksi allowed for a stainless steel plate under normal operating loads, and therefore the plate is adequate. The anchors used are the same as in Installation Sketch 003 while the anchor forces here are less than those in Form 9 Installation Sketch 003. Thus the anchors are acceptable by comparison.

Form 9 Installation sketch 008 depicts the mounting of the VEGAPULS 65 radar sensor and PLICSCOM adjustment module underneath grating. The total weight of the equipment and mounting is approximately 15 lbs. The actual natural frequency of the support is approximately 50 Hz, which is in the rigid zone of the response spectra curves. The corresponding ZPA for all the curves is below unity, which is much less than the conservatively assumed peak accelerations. Therefore, all components of the support are considered acceptable by Engineering Judgement based on the small magnitude of the seismic loads.

In addition to the installation of instrument supports, a 3" deep trench will be excavated in the EL 10'-0" floor slab of the intake structure to accommodate buried conduit. The top 1 ½" of the concrete is concrete topping, and has no structural purpose. Thus, only 1 ½" of the concrete excavated is structural concrete. With the removal of the 1 ½" of structural concrete, the moment capacity of the beam is reduced by approximately 15%, and this trenched portion of the slab will not see its design live load during this time. When the trenches are filled with concrete, after 28 days, the slab will be at full design capacity. Therefore, the removal of this concrete has an insignificant impact on the structural integrity of the EL 10'-0" slab.

- *Hydraulic requirements such as pump Net Positive Suction Head (NPSH), allowable pressure drops, and allowable fluid velocities. (NQA-1, Question 11)*

  The changes associated with this ECP have no hydraulic requirements.

- *Chemistry requirements including provisions for system flushing, batch sampling and in-line sampling. Power plant water chemistry treatment for primary systems, steam generator, and plant limitations on water chemistry. (NQA-1, Question 12)*

  The changes associated with this ECP have no chemistry requirements.

- *Electrical requirements such as source of power, load profile voltage, electrical insulation, motor requirements, physical and electrical separation of circuits and equipment; the effect of cable routing or rerouting on the cable tray system (loading, seismic capability, and capacity I imitations) (NQA-1, Question 13)*

  The radar probes are two-wire devices that are loop powered from two temporary 24 Vdc power supplies (one per unit, 9 probes each). Each radar probe has a maximum current of 22 mA. Therefore, each power supply must be able to supply the maximum current draw from each radar probe all at once or 248 mA (125% max). The Phoenix Contact power supply specified on Form 11, Bill of Materials has a maximum output current output of 1.5A (Ref 2). In addition, the power supply complies with DIN VDE 0106 for protection against electric shock (Ref. 2) as required by the radar probe (Ref. 1).

  Power is supplied via 2/C shielded 20 AWG cable for all radar probes. Power cable is distributed at junction boxes located inside each equipment where the power supplies are installed. Junction boxes are also installed at the far north end and far south end of the traveling screens to distribute power to radar probes upstream of the traveling screens. See Form 9, Installation and Testing Instructions for a detailed junction box layout. Wiring for the two remote indicators for 1LIT1100 and 2LIT2100 is via a 4/C shielded 20 AWG cable routed in conduit along with its power cable.

Embedded conduit is installed to support the power cable for radar probes mounted upstream of the traveling screens and below the 10' elevation surface of the intake structure. Conduit below grade shall be encased in concrete per Form 9, Installation and Testing Instructions, and shall be Polystyrene Type I conduit per E-406 Section 105.3; all other conduit shall be rigid steel. The route for the conduit starts between traveling screens 11B/12A for 1LIT1100, 1LIT1101B and 1LIT1201A and between 25B/26A for 2LIT2100, 2LIT2501A and 2LIT2601A. Conduit is not scheduled per this change. See Form 9, Installation and Testing Instructions for detailed conduit routing. All other power cable installed per this change is unscheduled and field routed open air between junction boxes and radar probes.

All cable shall be procured as non-safety related cable and takes exceptions to specification SP-317 as this change is to a non-safety related system. Cable selected contains PVC insulation and jacket; however, it meets the specifications for Class 1E cable per IEEE 383. Therefore, it meets the recommendations from Fire Protection in Form 17, Fire Protection/Appendix R Review Fire Protection Design Features Checklist for flame retardant cable and is qualified to be installed in nuclear power plants. In addition, the cable is only rated to 300V rather than 600V. This is acceptable however, since this is a low voltage application (24 Vdc) that will never challenge the voltage rating of the cable. Since the permanent modification will route cable through conduit rather than free-air, all conduits are dedicated conduit and will not contain any other cables. Therefore, it is acceptable to procure cable as non-safety related cable as it will not be routed with any safety related cable upon permanent installation.

- *Operational requirements under various conditions, such as startup, normal operation, shutdown, maintenance, abnormal or emergency operation, special or infrequent operation including installation of design changes, and the effect of system interaction. (NQA-1, Question 15)*

  The changes associated with this ECP are temporary and provide local indication of intake structure level during normal operation. They are not required to operate during any other plant condition.

- *Instrumentation and control requirements including indicating instruments, controls, and alarms required for operation, testing, and maintenance. Other requirements such as the type of instrument, installed spares, range of measurement, and location of indication are included (NQA-1, Question 16)*

  This change installs radar level probes at the Unit 1 and Unit 2 Intake structure. Each radar probe is assigned a CompID per this change as follows:

CompID	Description
1LIT1100	Unit 1 Trash Rake Upstream Radar Level
1LIT1101A	Traveling Screen 11 Upstream Radar Level
1LIT1101B	Traveling Screen 11 Downstream Radar Level
1LIT1201A	Traveling Screen 12 Upstream Radar Level
1LIT1201B	Traveling Screen 12 Downstream Radar Level
1LIT1301B	Traveling Screen 13 Downstream Radar Level
1LIT1401B	Traveling Screen 14 Downstream Radar Level
1LIT1501B	Traveling Screen 15 Downstream Radar Level
1LIT1601B	Traveling Screen 16 Downstream Radar Level
2LIT2100	Unit 2 Trash Rake Upstream Radar Level
2LIT2601A	Traveling Screen 26 Upstream Radar Level
2LIT2601B	Traveling Screen 26 Downstream Radar Level
2LIT2501A	Traveling Screen 25 Upstream Radar Level
2LIT2501B	Traveling Screen 25 Downstream Radar Level
2LIT2401B	Traveling Screen 24 Downstream Radar Level
2LIT2301B	Traveling Screen 23 Downstream Radar Level
2LIT2201B	Traveling Screen 22 Downstream Radar Level
2LIT2101B	Traveling Screen 21 Downstream Radar Level

ECP Supp No.: ECP-10-000208 **Rev. No.: 0000**

An integral indicator is mounted on top of the electronics module for each radar probe. Components 1LIT1100 and 2LIT2100 are located inside a safety area that requires personal floatation gear for entry. Therefore, these probes are connected to indicators that are mounted on existing power racks between traveling screens that have no safety requirements to view. The level indicators are assigned the following CompIDs:

CompID	Description
1LI1100	Unit 1 Trash Rake Upstream Radar Level Indicator
2LI2100	Unit 2 Trash Rake Upstream Radar Level Indicator

The integral indicator also serves as the configuration/adjustment module. The initial setup and configuration of the radar probes is to be performed by the vendor with oversight from CCNPP. This setup shall be documented and maintained to support documentation required for the permanent installation of these transmitters per ECP-10-000209. Also see Form 10, Turnover Closeout Plan for this requirement.

- *Redundancy, diversity, and separation requirements of structures, systems, and components. (NQA-1, Question 18)*

  Since the power supply and current signal are carried on the same two-wire cable, reliable separation shall exist between the supply circuit and the mains circuit per DIN VDE 0106 part 101.

- *Fire protection or resistance requirements: Safe shutdown analyses, the introduction of safe shutdown equipment into fire areas; Routing of piping and electrical cables and the necessity for cable fireproofing and/or fire stops; Fire detection and fire suppression capability; Fire barrier capability including fire door installation; Fire dampers; Access to fire fighting and emergency equipment; Use of non-combustible materials; Introducing combustible materials into safe shutdown areas by design or during installation or operation; Smoke and toxic gas generation. (NQA-1, Question24)*

  The changes associated with this ECP do not have and Fire protection or resistance impacts. Cable installed at radar probes is approved per IEEE 383 to be flame retardant as recommended by CCNPP Fire Protection. See Forms 16 and 17 for Fire Protection and Appendix R screenings.

- *Requirements for criticality control and accountability of nuclear materials (NQA-1, Question 32)*

  The changes associated with this ECP do not have any control or accountability of nuclear materials requirements.

7.0 APPLICATION ENVIRONMENT: (CNG-FES-007, SECTION 5.3.3)

- *Environmental conditions anticipated during storage, construction, operation, and accident conditions, such as pressure, temperature, humidity, corrosiveness, site elevation, wind direction, exposure to weather, flooding, nuclear radiation, electromagnetic radiation, and duration of exposure; qualification test requirements; shelf or service life limitations. (NQA-1, Question 6)*

  All components installed per this change are located outside at the intake structure. It can be conservatively assumed that the outdoor temperature at the intake structure has a maximum range of 0°F to 110°F. All components installed per this change, except the power supply, are required to withstand exposure to rain, sleet and snow. In addition to the ambient (outside) temperature, the radar probes measure water level from the Chesapeake Bay that is conservatively assumed to have a temperature range of 32°F to 90°F.

  The radar level probes have an ambient rating of -40°F to 176°F (Ref. 1) for their electronics unit, which is acceptable for the expected operating and storage range. In addition, each probe can measure a medium with a process temperature between -40°F and 266°F (Ref. 1), which is acceptable for the expected process temperature. In addition, each probe comes with an integral or remote indicating module with an ambient temperature rating of 5°F to 158°F (Ref. 3 and 4), which is just outside the lower end of the expected operating range. However, due to the nature of this change (non-safety related), the fact that the modules only provide local indication, and the unlikely probability that local indication would be desired during these extreme temperatures; the difference in rated and expected temperatures is acceptable.

  The power supply has an ambient temperature of 5°F to 158°F (Ref. 2), which is also just outside the lower end of the expected operating range. This is acceptable for the same reasons as the indicators. In addition, the power supply is mounted inside a structure, which is likely to be warmer than the outside temperature.

ECP Supp No.:	**ECP-10-000208**	**Rev. No.:**	**0000**

8.0 FIELD INTERFACE: (CNG-FES-007, SECTION 5.3.3)

- *Layout and arrangement requirements. (NQA-1, Question 14)*

  The changes associated with this ECP do not have layout or arrangement requirements.

- *Test requirements including pre-operational and subsequent periodic tests and the conditions under which they will be performed. (NQA-1, Question 20)*

  Preliminary and Post-installation testing shall be performed as required per Form 9, Installation and Testing Instructions. No periodic testing is required per this change.

- *Accessibility, maintenance, repairs and pre-service and in-service inspection requirements for the plant including the conditions under which these will be performed (NQA-1, Question 21).*

  The changes associated with this ECP do not have accessibility, maintenance, repairs or pre-service and in-service inspection requirements. Per VTM 12335-030, radar probes do not require periodic maintenance; however, it is suggested that a check of the instrument measurement against a field measurement be performed at intervals in accordance with the Equipment Reliability Classification established per 201000229 Form 10, Turnover Closeout Plan.

- *Personnel requirements and limitations including the qualification and number of personnel available for operation, maintenance, testing and inspection, and radiation exposures to the public and facility personnel. (NQA-1, Question 22)*

  The changes associated with this ECP do not have personnel requirements or limitations.

- *Safety requirements for preventing personnel injury including such items as radiation safety, minimizing radiation exposure to personnel, criticality safety, restricting the use of dangerous materials, escape provisions from enclosures, and grounding of electrical systems (NQA-1, Question 28).*

  Installation of 1LIT1100 and 2LIT2100 require entry into a safety area that requires personal floatation gear. This should be worn when applicable in accordance with Form 9 Installation and Testing Instructions.

- *Materials, processes, parts, and equipment suitable for application. (NQA-1, Question 27)*

  Material used for this application shall be per Form 11, ECP Materials List.

- *Quality and quality assurance requirements (NQA-1, Question 29)*

  The components installed per this change are non-safety related. Therefore, NQA-1 requirements are not specifically invoked.

- *Interface requirements between equipment and operation and maintenance personnel (NQA-1, Question 31)*

  Local indication at each radar probe and 1LI1100 and 2LI2100 may be incorporated into procedures as necessary. This is to be determined by operations per 201000229 Form 10, Turnover Closeout Plan.

- *Load path requirements for installation, removal, and repair of equipment and replacement of major components (NQA-1, Question 33)*

  The changes associated with this ECP have no load path requirements.

9.0 OTHER (NQA-1 REQUIREMENTS): (CNG-FES-007, SECTION 5.3.3)

- *Security requirements to include access and administrative control requirements and system design requirements including redundancy, power supplies, support system requirements, emergency operational modes, and personnel accountability(NQA-1, Question 17)*

  Each radar probe indicating and adjustment module has the option to require a PIN number to change the settings. If the PIN option is enabled, only read functions are permitted without entering the PIN. This option is a permanent setting on the module.

- *Transportability requirements such as size and shipping weight, limitations, ICC regulations. (NQA-1, Question 23)*

  The changes associated with this ECP do not have transportability requirements.

- *Other requirements to prevent undue risk to the health and safety of the public. (NQA-1, Question 26)*

ECP Supp No.:	**ECP-10-000208**	**Rev. No.:**	**0000**

The changes associated with this ECP do not have other requirements related to public health and safety.

- *Handling, storage, cleaning, and shipping requirements. (NQA-1, Question 25)*

  The radar probes installed per this change shall be shipped in accordance with instruction notes included on packaging. Storage shall be in un-opened original packaging until time of use. Storage shall be under the following conditions:

  - Not in the open
  - Dry and dust free
  - Not exposed to corrosive media
  - Protected against solar radiation
  - Avoiding mechanical shock and vibration

FORM 8, OPERATIONAL IMPACT OF DESIGN CHANGE

ECP Supp No.: ECP-10-000208 **Rev. No.: 0000**

A. INSTRUCTIONS:

Describe in Section B the **operational impact** of the change, if any. Include the following, as applicable,

- How the system operates differently from what it did.
- Changes to the functional and operational characteristics of the system or component.
- Impact of this change on the simulator software, e.g., flow coefficients on valves, and hardware
- Electrical, interlocks, power supply, control schemes, alarm and indication changes, etc.
- Mechanical, capacity changes, effect on system parameters, setpoint changes, equipment additions or deletions, cross-connects, etc.
- Valves, changes in failure mode, capacity drive mechanism, actuation signal alarm and control function or location, etc.
- Technical Specification, "How must operation change?
- Are new or changes to current operator movements required?
- Potential for this modification to inadvertently cause a reactor trip, including:
  - Is any affected equipment trip sensitive or located in trip sensitive areas?
  - Will construction activities impact trip sensitive equipment or occur in trip sensitive areas?
- Will post modification testing impact trip sensitive equipment?
- Potential for this modification to impact the control or monitoring of reactivity
- Potential for this modification to affect changes in operating limits and changes in operating margins and strategies.
- For core reloads, evaluate and determine if there will be significant changes in core physics or reactivity coefficients.
- Recommendations for special post-modification testing, e.g., testing for potential side effects due to changes in system operation, if any
- Recommendations for special Operator or Maintenance training, if any
- Recommendations for unique configuration documentation or logistic support, if any.
- Other recommended compensatory measures, if any, e.g., mock-ups, simulation
- Discuss potential for MOD to impact control of core monitoring, operating limits, core physics, and reactivity

B. DESCRIPTION OF IMPACT:

This change installs radar level probes at the Intake Structure to provide local level indication only. Each probe provides local level indication from an electronic display module on the top of the component. The exception is the indication for 1LIT1100 and 2LIT2100, which is located on the east intake structure wall at new remote indicators 1LI1100 and 2LI2100 respectively. The radar probes do not provide control room indication or alarms and have no input to control related functions. Refer to the following ECNs for location of instrumentation for level monitoring.

CompID	Description	ECN
1LIT1201B	Traveling Screen 12 Downstream Radar Level	ECP-10-000208 61348-0039
1LIT1301B	Traveling Screen 13 Downstream Radar Level	ECP-10-000208 61349-0042
1LIT1401B	Traveling Screen 14 Downstream Radar Level	ECP-10-000208 61349-0042
1LIT1501B	Traveling Screen 15 Downstream Radar Level	ECP-10-000208 61349-0042
1LIT1601B	Traveling Screen 16 Downstream Radar Level	ECP-10-000208 61349-0042
2LIT2501B	Traveling Screen 25 Downstream Radar Level	ECP-10-000208 63351SH001-0031
2LIT2401B	Traveling Screen 24 Downstream Radar Level	ECP-10-000208 63350-0040
2LIT2301B	Traveling Screen 23 Downstream Radar Level	ECP-10-000208 63350-0040
2LIT2201B	Traveling Screen 22 Downstream Radar Level	ECP-10-000208 63350-0040
2LIT2101B	Traveling Screen 21 Downstream Radar Level	ECP-10-000208 63350-0040

ECP Supp No.: **ECP-10-000208** **Rev. No.:** **0000**

CompID	Description	ECN
1LIT1101B	Traveling Screen 11 Downstream Radar Level	ECP-10-000208 61348-0039
2LIT2601B	Traveling Screen 26 Downstream Radar Level	ECP-10-000208 63351SH001-0031
1LIT1101A	Traveling Screen 11 Upstream Radar Level	ECP-10-000208 61348-0039
1LIT1201A	Traveling Screen 12 Upstream Radar Level	ECP-10-000208 61348-0039
2LIT2601A	Traveling Screen 26 Upstream Radar Level	ECP-10-000208 63351SH001-0031
2LIT2501A	Traveling Screen 25 Upstream Radar Level	ECP-10-000208 63351SH001-0031
1LIT1100	Unit 1 Trash Rake Upstream Radar Level	ECP-10-000208 61348-0039
2LIT2100	Unit 2 Trash Rake Upstream Radar Level	ECP-10-000208 63351SH001-0031
1LI1100	Unit 1 Trash Rake Upstream Radar Level Indicator	ECP-10-000208 61348-0039
2LI2100	Unit 2 Trash Rake Upstream Radar Level Indicator	ECP-10-000208 63351SH001-0031

ECP Supp No.: ECP-10-000208 **Rev. No.: 0000**

A. INSTALLATION INSTRUCTIONS:

This installation section addresses the changes associated with the installation of new radar level probes at the Units 1 & 2 intake structure. All work associated with this ECP is classified as non-safety related and shall be planned and controlled in accordance with the applicable procedures and specifications.

General Notes:

Installation steps may be performed in any order as determined by the field.

Radar probes are being installed in temporary configuration by this modification. The level indicator numbers have been assigned in FCMS but the junction box numbers, cable numbers and conduit numbers will not be assigned due to this temporary configuration. Conduits will be installed in the concrete and will remain in place but will not be numbered until the next modification ECP-10-000209 is installed.

Precautions:

When working on the waterfront, ensure site procedures for fall protection, Personnel Floatation Devices and other safety procedures are followed.

Pre-Installation Instructions

NOTE: Additional assemblies shall be fabricated at the direction of the System Engineer

1. Fabricate 6"/8" penetration mounting sub-assemblies (10 each) per Installation Sketch #1
2. Fabricate 10" penetration mounting sub-assemblies (2 each) per Installation Sketch #2
3. Fabricate anchor mounting brackets (4 each) per Installation Sketch #3
4. Fabricate bay level mounting brackets (2 each) per Installation Sketch #8
5. Fabricate Level Indicator Brackets (2 each) per Installation Sketch #4
6. Build junction boxes per Installation Sketch #6
7. At penetration locations, top of penetration shall be ground flush with concrete to provide flush mounting surface.
8. Replace rail mount attachment with wall mount attachment on 1LI1100 and 2LI2100

Installation Instructions

NOTE: Sub-section installations can be performed in any order.

Junction Box Installation

1. Install junction boxes with supports for transmitters located *upstream* of the traveling screens to intake structure deck per E-406 Section 104.3 Sht 65 (Behind 11B/12A for 1LIT1100, 1LIT1101A and 1LIT1201A and behind 25B/26A for 2LIT2100, 2LIT2501A, and 2LIT2601A per Installation Sketch #5). Mount per Installation Sketch #6. Verify box locations with Project Manager (PM) prior to installation.

2. Install junction boxes with supports for power distribution inside equipment rooms behind screens 14B and 25A per E-406 Section 104.3 Sht 61 (Reference Installation Sketch #5). Mount per Installation Sketch #6. Verify box locations with PM prior to installation.

ECP Supp No.: ECP-10-000208 **Rev. No.: 0000**

Embedded Conduit Installation

3. Scan area where conduit is to be installed between screens 11B/12A and 25B/26A, extending out to trash rakes, to identify any existing conduits or rebar (Ref. ECP-10-000208 61348-0039, ECP-10-000208 63351SH001-0031 and Installation Sketch #5).

NOTE: The following step requires cutting of concrete.

4. Lay out conduit route using Installation Sketches #5 and #9 as a guide to cut concrete from junction boxes to instrument locations for 1LIT1100, 1LIT1101A and 1LIT1201A on the north side of the intake structure and 2LIT2100, 2LIT2501A, and 2LIT2601A on the south side. Remove upper 3" of concrete along conduit route. **CAUTION:** DO NOT cut any rebar or remove concrete more than 3" deep.

5. Install PVC conduit below grade for radar probes upstream of the traveling screens per E-406 and Installation Sketch #9. Conduit length shall be adequate to stub out of concrete once poured.

6. Field route rigid steel conduit from junction boxes to PVC conduits and connect using CG fittings to prevent water intrusion (Reference Installation Sketch #5).

7. Inspect and check conduit to assure continuity and correct position in accordance with E-406 Section 105.3.

8. Encase conduit in concrete per E-406 Section 105.3 and C-0010. Roughen the sides and the bottom of the trench before pouring to ensure adequate bond. Fill trench with structural concrete that conforms to Bechtel Specification 6750-C-9 and shall be class C-1 concrete (4000 psi min at 28 days).

Remote Indicators

9. Field locate remote indicator 1LI1100 either on east intake structure wall or racks located between traveling screen sets. Verify location with PM prior to installation.

10. Install remote indicator mounting brackets for 1LI1100 per Installation Sketch #4 and VTM 12335-030 Tab 3.

11. Field locate remote indicator 2LI2100 either on east intake structure wall or racks located between traveling screen sets. Verify location with PM prior to installation.

12. Install remote indicator mounting brackets for 2LI2100 per Installation Sketch #4 and VTM 12335-030 Tab 3.

Power Supply Installation

NOTE: The following steps assume welding carts are located inside structure intake equipment rooms.

13. Inside intake structure room located behind traveling screen 14B, attach temporary DIN rail to welding cart. Use DIN rail as template to drill holes in cart and attach using machine screws.

14. Attach 24Vdc power supply to DIN rail.

15. Wire electrical pigtail cord to 120VAC input terminals L(+) & N(-).

16. Inside intake structure room located behind traveling screen 25A, attach temporary DIN rail to welding cart. Use DIN rail as template to drill holes in cart and attach using machine screws.

17. Attach 24Vdc power supply to DIN rail.

18. Wire electrical pigtail cord to 120VAC input terminals L(+) & N(-).

Cable Install

NOTE: Cables shall be routed along the existing fiberglass pipes for support and protection. Cables to be attached using tie-wraps or other approved means. Ensure all cables are properly supported and attached.

19. Field route cable between power supplies and corresponding junction boxes inside equipment rooms using E-406 Section 102 as guidance per Installation Sketches #5, #6, and #7. At power supplies, 24Vdc power is connected across terminals 24V and 0V.

20. Field route cables from equipment room junction boxes to radar probe locations for the following components using Installation Sketch #5 and E-406 Section 102 for guidance. Cables shall be routed through existing penetrations in equipment rooms.

CompID	Description	Power Supply Location
1LIT1201B	Traveling Screen 12 Downstream Radar Level	14B Equipment Room
1LIT1301B	Traveling Screen 13 Downstream Radar Level	14B Equipment Room
1LIT1401B	Traveling Screen 14 Downstream Radar Level	14B Equipment Room
1LIT1501B	Traveling Screen 15 Downstream Radar Level	14B Equipment Room
1LIT1601B	Traveling Screen 16 Downstream Radar Level	14B Equipment Room
2LIT2501B	Traveling Screen 25 Downstream Radar Level	25A Equipment Room
2LIT2401B	Traveling Screen 24 Downstream Radar Level	25A Equipment Room
2LIT2301B	Traveling Screen 23 Downstream Radar Level	25A Equipment Room
2LIT2201B	Traveling Screen 22 Downstream Radar Level	25A Equipment Room
2LIT2101B	Traveling Screen 21 Downstream Radar Level	25A Equipment Room

21. Field route power cable from junction box in equipment room behind traveling screen 14B to junction box located at the north end of the intake structure per Installation Sketch #6.

22. Field route power cable from junction box in equipment room behind traveling screen 25A to junction box located at the south end of the intake structure per Installation Sketch #6.

23. Field route cables from junction boxes to radar probe locations for the following components using Installation Sketch #5 and E-406 Section 102 for guidance.

CompID	Description	Junction Box Location
1LIT1101B	Traveling Screen 11 Downstream Radar Level	Intake Structure North End
2LIT2601B	Traveling Screen 26 Downstream Radar Level	Intake Structure South End

24. Wire at junction boxes per Installation Sketches #6 and #7.

    24.1 Cable may have single communication wire, this wire is not used and can be left floating at both ends. Ensure wire does not contact any terminals.

25. Route cable through conduit previously installed between junction boxes and radar probes upstream of the traveling screens as follows:

    25.1 Route 20 AWG T.S.P. through ¾" conduit for 1LIT1101A and 1LIT1201A on the north side of the intake structure and 2LIT2501A and 2LIT2601A on the south side.

    25.2 Route 20 AWG T.S.P and 4/C 20 AWG cable through ¾" conduit to 1LIT1100 on the north side of the intake structure and 2LIT2100 on the south side.

    25.3 Terminate cable in junction box per Installation Sketch #7

26. Route 4/C 20 AWG cable from junction box to 1LI1100 and 2LI2100 respectively per Installation Sketch #5. Terminate cable at junction box per Installation sketch #7 and at indicator per VTM 12335-030 Tab 3.

Radar Probe Installation

NOTE: Radar Probe Installation can be performed in any order

27. Perform the following steps for each radar probe listed below:

CompID	Description	ECN
1LIT1201B	Traveling Screen 12 Downstream Radar Level	ECP-10-000208 61348-0039
1LIT1301B	Traveling Screen 13 Downstream Radar Level	ECP-10-000208 61349-0042
1LIT1401B	Traveling Screen 14 Downstream Radar Level	ECP-10-000208 61349-0042
1LIT1501B	Traveling Screen 15 Downstream Radar Level	ECP-10-000208 61349-0042
1LIT1601B	Traveling Screen 16 Downstream Radar Level	ECP-10-000208 61349-0042
2LIT2501B	Traveling Screen 25 Downstream Radar Level	ECP-10-000208 63351SH001-0031
2LIT2401B	Traveling Screen 24 Downstream Radar Level	ECP-10-000208 63350-0040
2LIT2301B	Traveling Screen 23 Downstream Radar Level	ECP-10-000208 63350-0040
2LIT2201B	Traveling Screen 22 Downstream Radar Level	ECP-10-000208 63350-0040
2LIT2101B	Traveling Screen 21 Downstream Radar Level	ECP-10-000208 63350-0040

    27.1 Locate radar probe per the applicable ECN in the table above.

    27.2 Install 6"/8" lower mounting assembly in penetration per Installation Sketch #1.

        27.2.1 Rotate the lower assembly to the desired position (based on detector head orientation).

        27.2.2 Thread a nut on the 3/8" bolt and run close to the bolt head, thread the bolt into the welded nut on the angle leg and tighten the jacking bolts firmly against the penetration side wall. Once tight, lock the bolt in place using the jam nut on the bolt.

        27.2.3 Perform above step for all jacking bolts.

    27.3 Install 6"/8" upper mounting assembly per Installation Sketch #1. Position the upper plate assembly on top of the lower assembly plate and secure using (4) ¼-20 x 3/4" bolts. Note that the radar probe may be installed in the upper plate prior to installing upper plate to insure correct orientation.

27.4 Install radar probe in threaded coupling of upper mounting assembly and attach electronics module. Verify that the probe orientation is correct, if not rotate the probe or the lower assembly to obtain desired orientation.

27.5 Label radar probe.

27.6 Wire transmitter per installation Sketches #6 and #7 and VTM 12335-030 Tab 1.

27.6.1 Prior to cable entry into gland seal, a drip loop shall be installed to drain moisture away from radar probe electronics and junction box.

27.6.2 Cable has single communication wire, this wire is not used and can be left floating at both ends. Ensure wire does not contact any terminals.

27.7 Install protective cage assembly per Installation Sketch #1. Verify the probe orientation is correct and cables are installed. Attach the guard assembly to the upper plate using (4) ¼-20 SS bolts and nuts. If interference is encountered contact System Engineer and Engineering for resolution.

28. Perform the following steps for each radar probe listed below:

CompID	Description	ECN
1LIT1101B	Traveling Screen 11 Downstream Radar Level	ECP-10-000208 61348-0039
2LIT2601B	Traveling Screen 26 Downstream Radar Level	ECP-10-000208 63351SH001-0031

NOTE: To minimize interference with the penetration, 3" long angle may be trimmed as necessary.

NOTE: Welded nuts on lower assemblies may be lowered up to 2" if needed based on penetration conditions.

28.1 Locate radar probe per the applicable ECN in the table above.

28.2 Install 10" lower mounting assembly in penetration per Installation Sketch #2.

28.2.1 Rotate the lower assembly to the desired position (based on detector head orientation).

28.2.2 Thread a nut on the 3/8" bolt and run close to the bolt head, thread the bolt into the welded nut on the angle leg and tighten the jacking bolts firmly against the penetration side wall. Once tight, lock the bolt in place using the jam nut on the bolt.

28.2.3 Perform above step for all jacking bolts.

28.3 Install 10" upper mounting assembly per Installation Sketch #2. Position the upper plate assembly on top of the lower assembly plate and secure using (4) ¼-20 x 3/4" bolts. Note that the radar probe may be installed in the upper plate prior to installing upper plate to insure correct orientation.

28.4 Install radar probe in threaded coupling of upper mounting assembly and attach electronics module. Verify that the probe orientation is correct, if not rotate the probe or the lower assembly to obtain desired orientation.

28.5 Label radar probe.

28.6 Wire transmitter per installation Sketches #6 and #7 and VTM 12335-030 Tab 1.

28.6.1 Prior to cable entry into gland seal, a drip loop shall be installed to drain moisture away from radar probe electronics and junction box.

28.6.2 Cable has single communication wire, this wire is not used and can be left floating at both ends. Ensure wire does not contact any terminals.

28.7 Install protective cage assembly per Installation Sketch #2. Verify the probe orientation is correct and cables are installed. Attach the guard assembly to the upper plate using (4) ¼-20 SS bolts and nuts. If interference is encountered contact System Engineer and Engineering for resolution.

29. Perform the following steps for each radar probe listed below:

CompID	Description	ECN
1LIT1101A	Traveling Screen 11 Upstream Radar Level	ECP-10-000208 61348-0039
1LIT1201A	Traveling Screen 12 Upstream Radar Level	ECP-10-000208 61348-0039
2LIT2601A	Traveling Screen 26 Upstream Radar Level	ECP-10-000208 63351SH001-0031
2LIT2501A	Traveling Screen 25 Upstream Radar Level	ECP-10-000208 63351SH001-0031

29.1 Locate radar probe per the applicable ECN in the table above.

29.2 Install anchor mounting bracket per Installation Sketch #3. The components shall be installed below grating in front of the traveling screens. Centerline of mounting bracket shall be at the 9'-0" elevation. Verify location and elevation for each bracket prior to drilling anchors. Install mounting bracket using Hilti Kwik Bolt anchors per site procedure and Hilti installation procedure.

29.3 Install radar probe in threaded coupling on mounting bracket and attach electronics module.

29.4 Label radar probe.

29.5 Wire transmitter per installation Sketches #6 and #7 and VTM 12335-030 Tab 1.

29.5.1 Prior to cable entry into gland seal, a drip loop shall be installed to drain moisture away from radar probe electronics and junction box.

29.5.2 Cable has single communication wire, this wire is not used and can be left floating at both ends. Ensure wire does not contact any terminals.

30. Perform the following steps for each radar probe listed below

CompID	Description	ECN
1LIT1100	Unit 1 Trash Rake Upstream Radar Level	ECP-10-000208 61348-0039
2LIT2100	Unit 2 Trash Rake Upstream Radar Level	ECP-10-000208 63351SH001-0031

NOTE: Prior to removing grating or accessing location for Bay Level detectors 1LIT1100 and 2LIT2100, ensure all requirements for fall protection and personal floatation are met.

30.1 Locate radar probe per the applicable ECN in the table above.

30.2 Use conduit route as guide to locate radar probe in grating, cut 8" (±1") square hole in grating and mesh per Installation Sketch #8 (Reference Dwg 61843).

CAUTION: Ensure that cutting does not create instability in grating. Grating shall be banded prior to cutting to ensure stability is maintained during cutting.

30.3 Prior to installation, wire transmitter per installation Sketches #6 and #7, and VTM 12335-030 Tab 1. Ensure adequate cable exists to provide a drip loop when probe position is finalized.

30.4 Install radar probe per Installation Sketch #8. Verify probe and lower assembly are level and plumb.

30.5 Ensure a drip loop exists prior to cable entry in the transmitter gland seal to drain moisture away from radar probe electronics and junction box.

30.6 Cable has a single communication wire, this wire is not used and can be left floating at both ends. Ensure wire does not contact any terminals.

30.7 Tighten bolts and secure instrument in lower mounting assembly and tighten lower assembly to upper assembly.

30.8 Attach upper mounting assembly to grating using grating clips and stainless steel hardware as required.

30.9 Label radar probe.

Radar Probe Configuration

31. Configure Radar probes per vendor instruction and VTM 12335-030 Tab 2.

32. Document As-Left configuration for individual probes as necessary and submit to Lead Design Engineer (LDE). NOTE: A configuration document can be shared between probes with identical configuration, but the applicable components shall be listed on the document.

Power Up System

33. At equipment room located behind traveling screen 14B, plug power supply into 120 Vac welder utility receptacle.

34. At equipment room located behind traveling screen 25A, plug power supply into 120 Vac welder utility receptacle.

Removal Instructions

NOTE: This change does not remove radar probes, level indicators, or junction boxes in support of implementation of ECP-10-000209 for permanent installation.

ECP Supp.No.: ECP-10-000208 **Rev. No.: 0000**

1. Inside intake structure rooms located behind traveling screen 14B and 25A, unplug power supply from welder outlet.

2. On power supply, de-terminate 120Vac wiring at terminals L & N and 24Vdc wiring at terminals 24V and 0V.

3. Determinate all cable between power supply and radar probes.

4. Remove cable and place in stock if desired. Cable may be re-used for permanent installation under ECP-10-000209.

5. Inside intake structure rooms located behind traveling screens 14B and 25A, detach power supply from DIN rail mounted on welding cart. These components should be placed back in stock.

6. Remove DIN rail from welding cart. DIN rail and mounting screws can be placed in stock if desired.

B. TESTING REQUIREMENTS AND ACCEPTANCE CRITERIA:

Post-Installation Testing

1. Power supply testing

   Acceptance Criteria: 24Vdc ±1%

2. Radar probe configuration

   Acceptance Criteria: Shall be tested with vendor upon installation.

3. New cables shall be continuity tested in accordance with E-406

   Acceptance Criteria: Test values shall be per E-406

4. Concrete

   Acceptance Criteria: Concrete shall be tested in accordance with Specification C-0011B

5. Radar probe functional test

   Radar probes do not fall out of calibration and either function as designed, or do not function at all. Therefore, ensuring that the radar probe is measuring level is enough to verify functionality.

   Acceptance Criteria: Radar probe measurement compares to field measurement

ECP Supp No.: ECP-10-000208 Rev. No.: 0000

C. TURNOVER/CLOSEOUT REQUIREMENTS – The following steps shall be included in the implementing work order(s) to ensure turnover and/or closeout requirements are satisfied.

TO/CO Plan No: 201000229

Final Turnover: ☐ Partial Turnover: ☐

Description of components/system (work scope) to be turned over to Operations:

Work Orders being turned over: _____

Does this work complete this modification? ☐ YES ☐ NO

If "NO," does the 10 CFR 50.59/72.48 review cover the interim plant configuration created by these work orders? ☐ YES ☐ NO

If this is a partial turnover, list the Work Orders required to complete modification.

N/A	Action	Responsible Individual	INITIALS
	PRIOR TO TESTING:		
☐*	All work Orders associated with this ECP that are required to be completed prior to turnover are complete	Resp Eng▽	_____
☒*	Final Walkdown Complete with Operations and Maintenance Document "Open Items" on FORM 13 and attach to work order	Resp Eng▽	_____
☒*	Engineering for all At-Risk Activities has been approved	Resp Eng▽	_____
☒*	Final Walkdown "Open Items List" has been reviewed. They will neither prevent safe testing nor reduce the safety of plant operations	Resp Eng▽	_____
	AFTER TESTING:		
☐*	Test Results have been reviewed and are satisfactory ☐ with anomalies listed below: ☐ without anomalies	Resp Eng▽ System Eng	_____ _____
☒*	Final Walkdown "Open Items List" has been reviewed and does not adversely impact safe operation or the design intent	Resp Eng▽	_____
☐*	All Labels are Installed (Valve, Component, Alarm)	Ops Shift Mngr	_____
☐*	Any CRs impacting operability have been dispositioned	Resp Eng▽	_____

FORM 9, INSTALLATION AND TESTING INSTRUCTIONS
(Sheet 10 of 10)

ECP Supp No.: ECP-10-000208 **Rev. No.: 0000**

☒	Engineering for all At-Risk Activities has been approved	Resp Eng▽	_____
☐	All Critical CDs and associated ECNs are Statused as APPROVED/DESIGN BASIS	Resp Eng▽	_____
☐	All Required Changes to Operations Procedures are Complete	Ops Shift Mngr	_____
☐	All TO/CO actions required prior to Turnover are complete	Resp Eng▽	_____
☐	Training has been notified of turnover	Resp Eng▽	_____
☐*	Training to Support Turnover Complete		
☐	• Operations	Ops Shift Mngr	_____
☐	• All others	Resp Eng▽	_____
☒*	Applicable Technical Specification Changes are Completed and UFSAR or USAR Changes are Submitted?	Resp Eng▽	_____
☐*	Plant Change Description provided to the Shift Manager NOTE: Description is generally a copy of the ECP coversheet and the Operational Impact Statement, if required)	Resp Eng▽	_____
☐*	Acceptance of Change: Manager – Operations (or Designee) _____ Printed Name/ Signature		_____ Date

* These requirements are generally not applicable for EQVs

▽ Responsible Engineer may be the responsible engineer or project manager assigned to the ECP or an alternate assigned by their organization.

Attachment 4, TC Installation and Testing Instructions Addenda

ECP Supp No.:	ECP-10-000208-000	Rev. No.:	0000

A. PRE-INSTALLATION REQUIREMENTS – The following steps shall be included in the implementing work order(s) to ensure pre-installation requirements are satisfied.

WARNING! – Do Not Install After _____

Date is 30 days after TCP approval date. Return to the Responsible Engineer if installation is delayed beyond this date.

Applicable Modes: ☒ 1 ☒ 2 ☒ 3 ☒ 4 ☒ 5 ☒ 6 ☐ Defueled

N/A	Action	Responsible Individual	INITIALS
☒	Engineering for all At-Risk Activities has been approved	Resp Eng[1]	_____
☒	Pre-Installation Training Complete	Resp Eng[1]	_____
☒	Pre-Installation Procedure Changes Complete	Resp Eng[1]	_____
☐	*Installation Approval* *Date:*	*Shift Manager*	_____

B. TEMPORARY CHANGE INSTALLATION AND VERIFICATION – The following steps shall be included in the implementing work order(s) to ensure TC tags are hung and installation is verified.

Installer: Name (Print) _____ Initials:_____ Ext._____

Verifier: Name (Print) _____ Initials:_____ Ext._____

Tag Config Seq#	Equip ID/Description/Location	INSTALLATION		RESTORATION	
		Installer Initial/Date	Verifier Initial/Date	Restorer Initial/Date	Verifier Initial/Date
~~N/A~~	~~None~~ 5/5/10				

Note any TC Tag placement restrictions, for example, TC tag not hung on SSC in containment:

[1]Responsible Engineer may be the Responsible Engineer, System Engineer, or Engineering Services designee.

Attachment 4, TC Installation and Testing Instructions Addenda

ECP Supp No.:	ECP-10-000208	Rev. No.:	0000

C. POST-INSTALLATION TURNOVER REQUIREMENTS – The following steps shall be included in the implementing work order(s) to ensure post-installation turnover requirements are satisfied.

N/A	Action	Responsible Individual	INITIALS
	BEFORE POST-INSTALLATION TESTING:		
☐	Installation Steps of Work Order(s) that are required to be completed prior to post-installation testing are complete	Resp Eng[1]	_____
	AFTER POST-INSTALLATION TESTING:		
☐	Test Results have been reviewed and are satisfactory	Resp Eng[1]	_____
☐	All TC Tags or Labels are Installed	Ops Shift Mngr	_____
☐	All ECNs are Statused as TC INSTALLED	Resp Eng[1]	_____
☐	TCP status changed to TC INSTALLED	Resp Eng[1]	_____
☐	All TO/CO actions required prior to Turnover are complete	Resp Eng[1]	_____
☐	Training has been notified of TCP Installation	Resp Eng[1]	_____
☐	Post-Installation Training Complete	Resp Eng[1]	_____
☐	Post-Installation Procedure Changes Complete	Resp Eng[1]	_____
	Acceptance of Temporary Change: Manager – Operations _____ _____ (or Designee) Printed Name/ Signature Date		

D. TEMPORARY CHANGE RESTORATION – The following steps shall be included in the implementing work order(s) to ensure pre-restoration requirements are satisfied and TC removal is verified.

	Restoration Approval	Date:	Shift Manager	_____

The Restorer and Verifier shall initial in the table of Tags (Section B) to indicate restoration and verification.

Restorer:	Name (Print)	_____	Initials:_____	Ext._____
Verifier:	Name (Print)	_____	Initials:_____	Ext._____

Other Restoration Requirements and Post Restoration Actions, including Testing, Training, Procedure Revisions, and Operations Turnover are addressed on the ECP Installation and Testing Instructions, CNG-FES-015, Form 10.

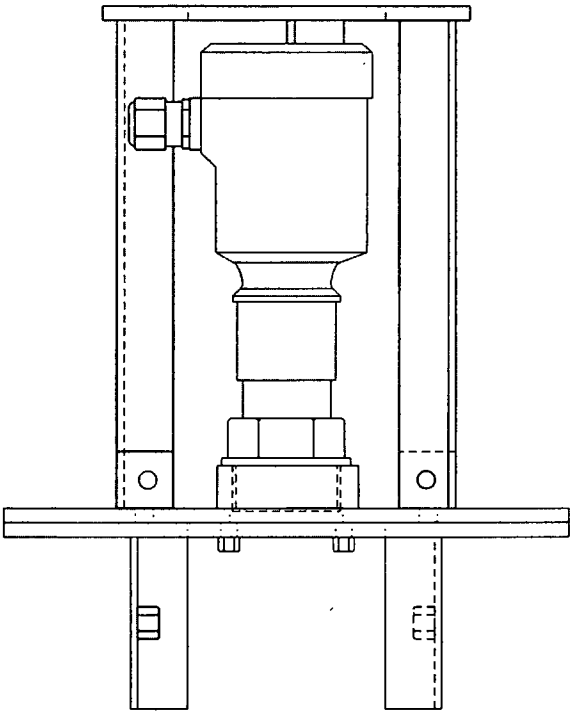

6"& 8" PENETRATION MOUNTING ASSEMBLY ELEVATION VIEW

NOTES:

1. ALL MATERIAL TO BE TYPE 316 OR 304 SS OR EQUAL
2. ALL CORNERS AND EDGES TO BE GROUND SMOOTH
3. ANGLE LEGS MAY BE TRIMMED AS NECESSARY
4. GRIND TOP OF RISER PIPE FLUSH WITH CONCRETE
5. TIGHTEN ALL BOLTS TO A SNUG-TIGHT CONDITION
6. WELD ELECTRODE SHALL BE E316-XX OR E304-XX AS REQ.
7. DRILL 7/16" DIAMETER HOLE IN ANGLE PRIOR TO WELDING NUT.

6" & 8" ASSEMBLY BILL OF MATERIALS

QTY	DESCRIPTION
4	ANGLE. TYPE 316 SS. 1/8" x1" x 1". 8 1/2" LONG
2	ANGLE. TYPE 316 SS. 1/8" 1"x 1". 3" LONG
1	PLATE. TYPE 316 SS. 1/4". 10" DIAMETER WITH 3 1/2" DIAMETER HOLE
1	PLATE. TYPE 316 SS. 1/4". 10" DIAMETER WITH 2" DIAMETER HOLE
1	PLATE. TYPE 316 SS. 1/4". 6 1/2" DIAMETER WITH 3 1/2" DIAMETER HOLE
4	BAR. TYPE 316 SS. 1/4" x 1"x1"
1	HALF COUPLING. SS. 1 1/2" NPT
2	HEX NUT. TYPE 316 SS. 3/8-16
8	HEX NUT. TYPE 316 SS. 1/4-20
2	BOLT. HEX HEAD. TYPE 316 SS. 3/8-16. LENGTH AS REQ.
8	BOLT. HEX HEAD. TYPE 316 SS. 1/4-20. LENGTH AS REQ.
4	WASHER. FLAT. TYPE 316 SS. 1/4"
4	WASHER. LOCK. TYPE 316 SS. 1/4"

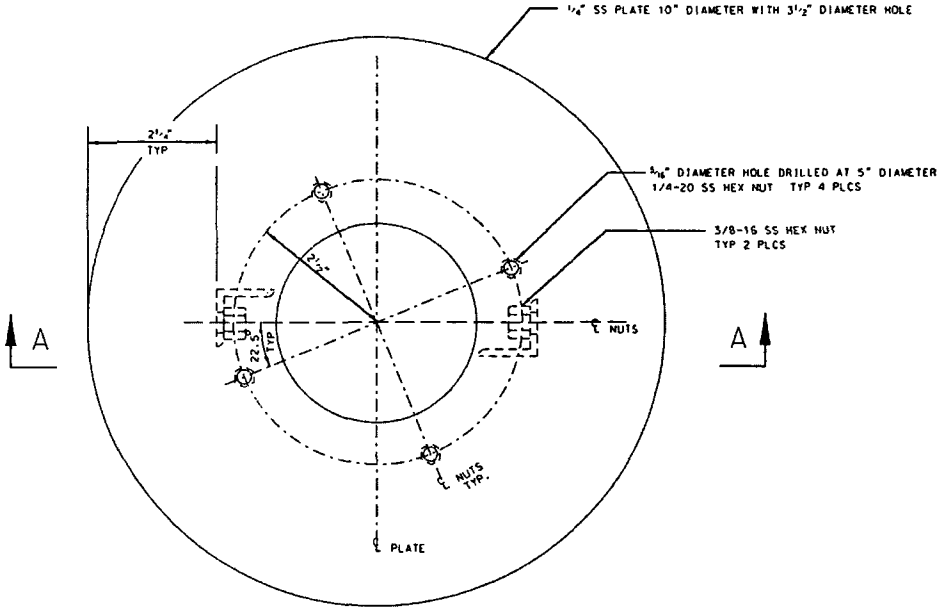

6"& 8" PENETRATION LOWER MOUNTING ASSEMBLY
PLAN VIEW

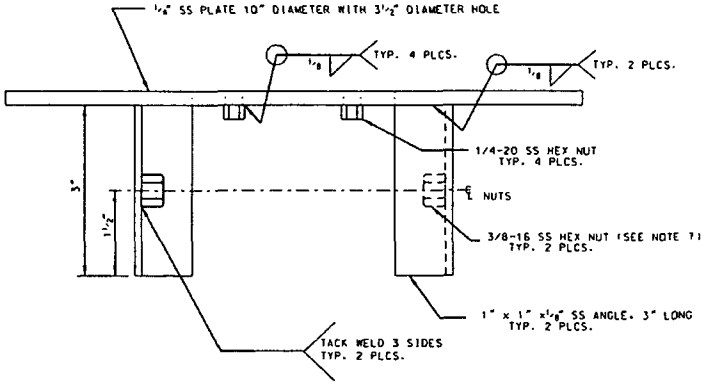

6"& 8" PENETRATION LOWER MOUNTING ASSEMBLY
SECTION VIEW
A-A

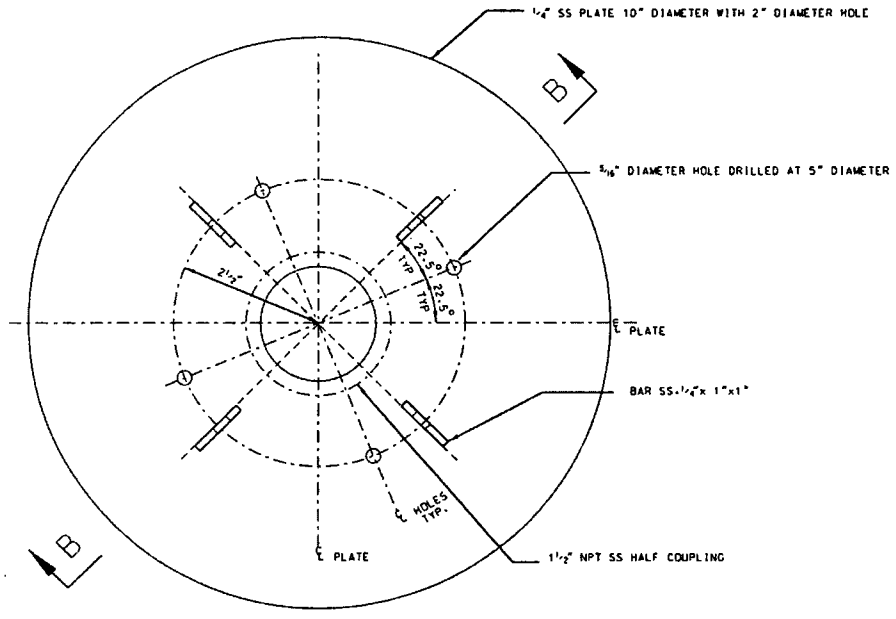

6"& 8" PENETRATION UPPER MOUNTING ASSEMBLY
PLAN VIEW

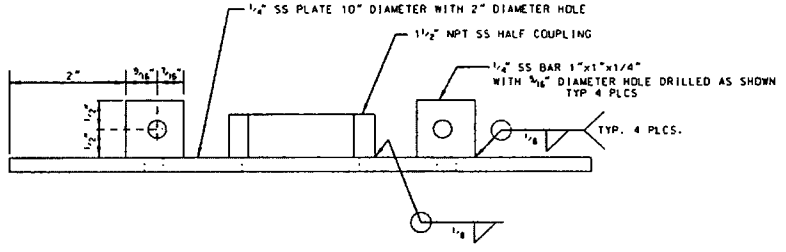

6"& 8" PENETRATION UPPER MOUNTING ASSEMBLY
SECTION VIEW
B-B

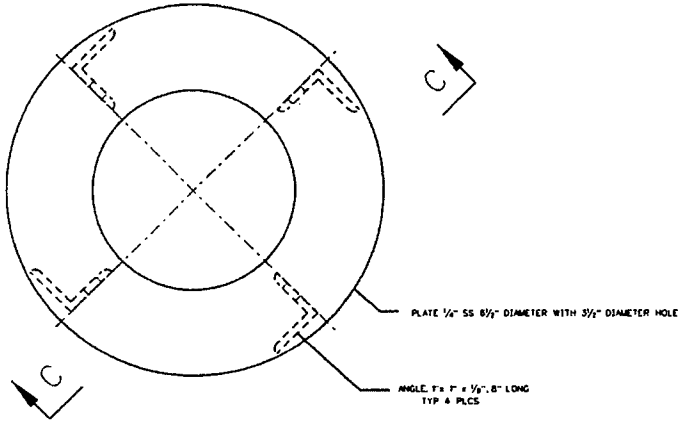

PROTECTIVE CAGE ASSEMBLY
PLAN VIEW

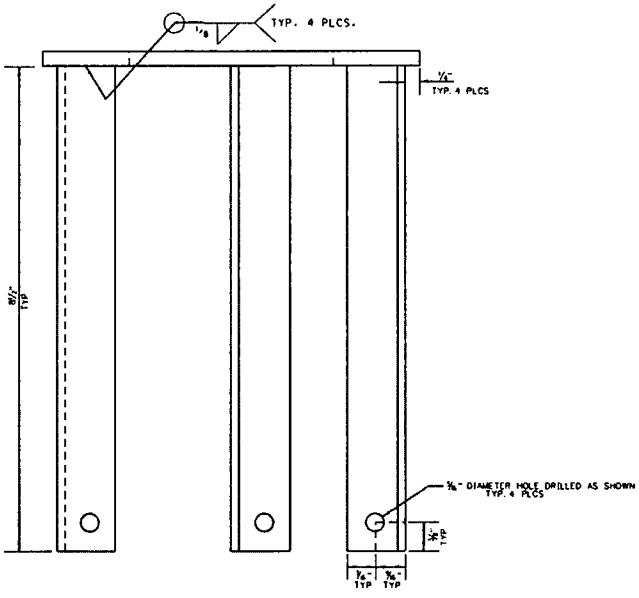

PROTECTIVE CAGE ASSEMBLY
SECTION VIEW
C-C

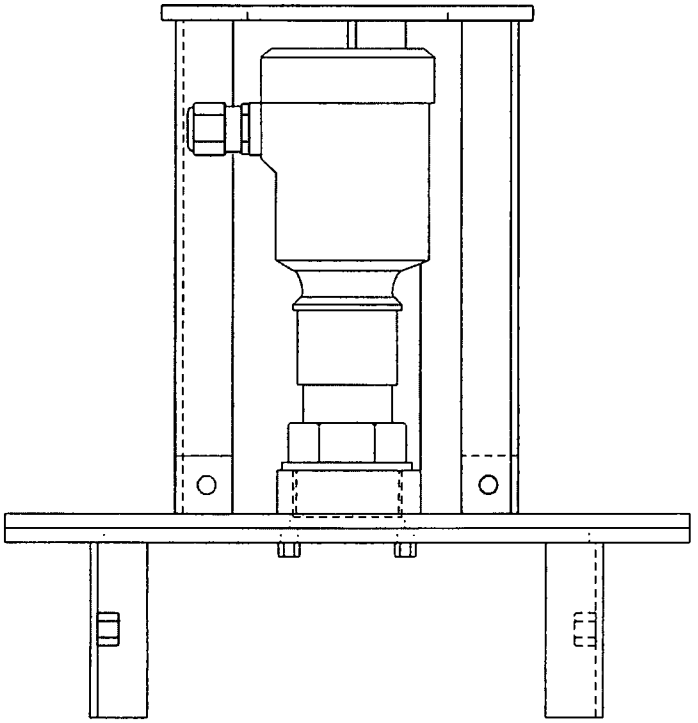

10" PENETRATION MOUNTING ASSEMBLY ELEVATION VIEW

NOTES:

1. ALL MATERIAL TO BE TYPE 316 OR 304 SS OR EQUAL
2. ALL CORNERS AND EDGES TO BE GROUND SMOOTH
3. ANGLE LEGS MAY BE TRIMMED AS NECESSARY
4. GRIND TOP OF RISER PIPE FLUSH WITH CONCRETE
5. TIGHTEN ALL BOLTS TO A SNUG-TIGHT CONDITION
6. WELD ELECTRODE SHALL BE E316-XX OR E304-XX AS REQ.
7. DRILL 7/16" DIAMETER HOLE IN ANGLE PRIOR TO WELDING NUT.

10" ASSEMBLY BILL OF MATERIALS

QTY	DESCRIPTION
4	ANGLE. TYPE 316 SS. 1/8"x 1"x 1". 8 1/2" LONG
2	ANGLE. TYPE 316 SS. 1/8"x1"x 1". 3" LONG
1	PLATE. TYPE 316 SS. 1/4". 12" DIAMETER WITH 6 3/4" DIAMETER HOLE
1	PLATE. TYPE 316 SS. 1/4". 12" DIAMETER WITH 2" DIAMETER HOLE
1	PLATE. TYPE 316 SS. 1/4". 6 1/2" DIAMETER WITH 3 1/2" DIAMETER HOLE
4	BAR. 316 SS. 1/4"x 1"x1"
1	HALF COUPLING. SS. 1 1/2" NPT
4	HEX NUT. TYPE 316 SS. 3/8-16
8	HEX NUT. TYPE 316 SS. 1/4-20
2	BOLT. HEX HEAD. TYPE 316 SS. 3/8-16. LENGTH AS REQ.
8	BOLT. HEX HEAD. TYPE 316 SS. 1/4-20. 3/4" LENGTH AS REQ.
4	WASHER. FLAT. TYPE 316 SS. 1/4"
4	WASHER. LOCK. TYPE 316 SS. 1/4"

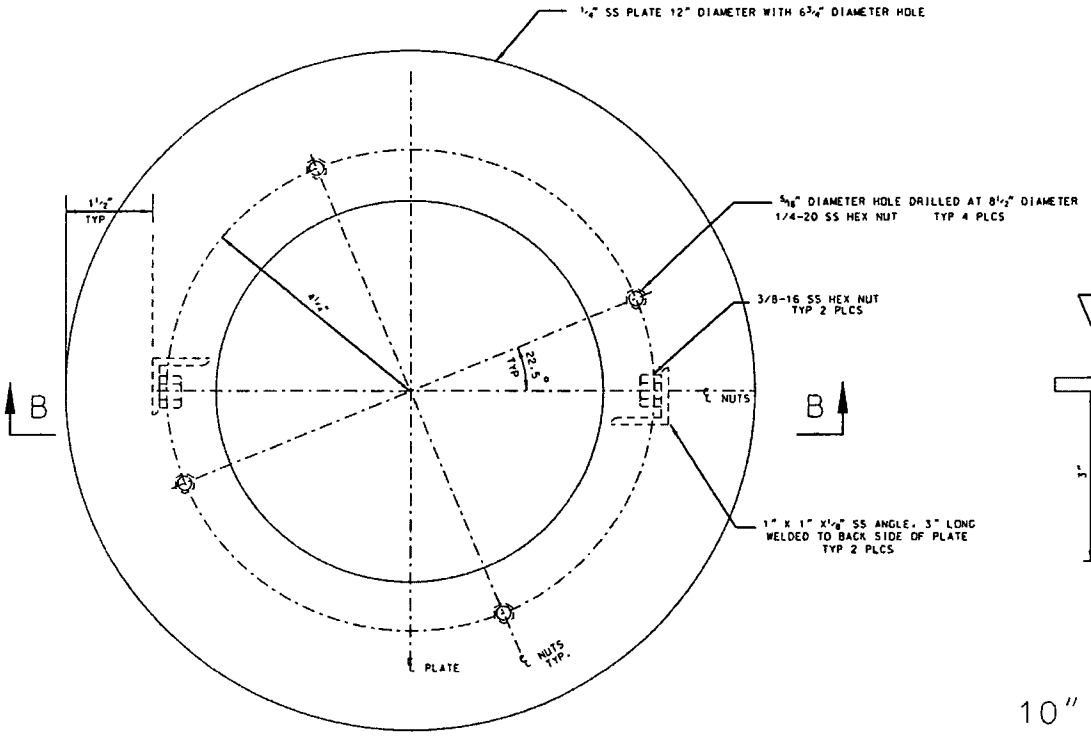

10" PENETRATION LOWER MOUNTING ASSEMBLY
PLAN VIEW

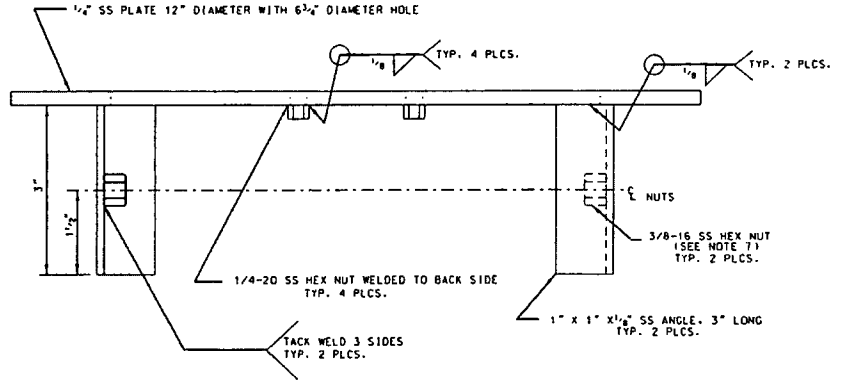

10" PENETRATION LOWER MOUNTING ASSEMBLY
SECTION VIEW
B-B

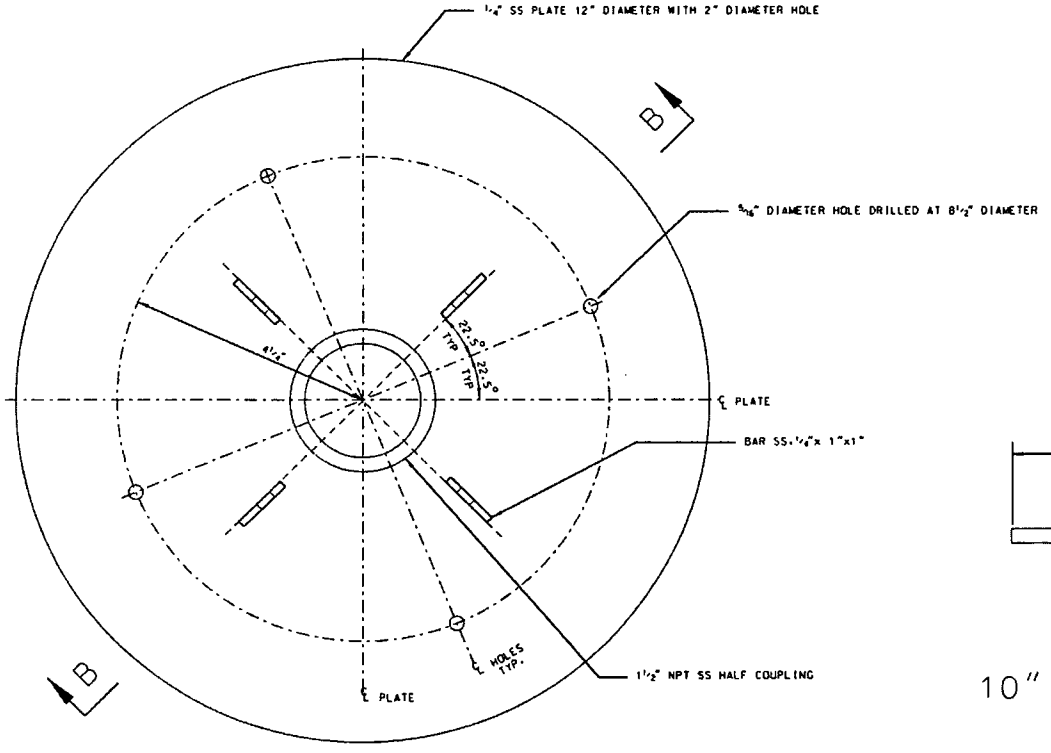

10" PENETRATION UPPER MOUNTING ASSEMBLY
PLAN VIEW

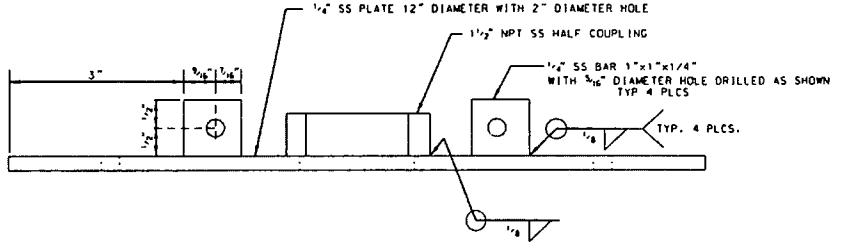

10" PENETRATION UPPER MOUNTING ASSEMBLY
SECTION VIEW
B-B

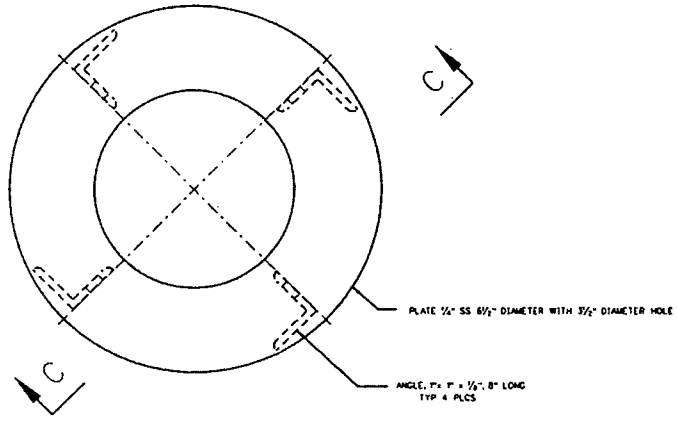

PROTECTIVE CAGE ASSEMBLY
PLAN VIEW

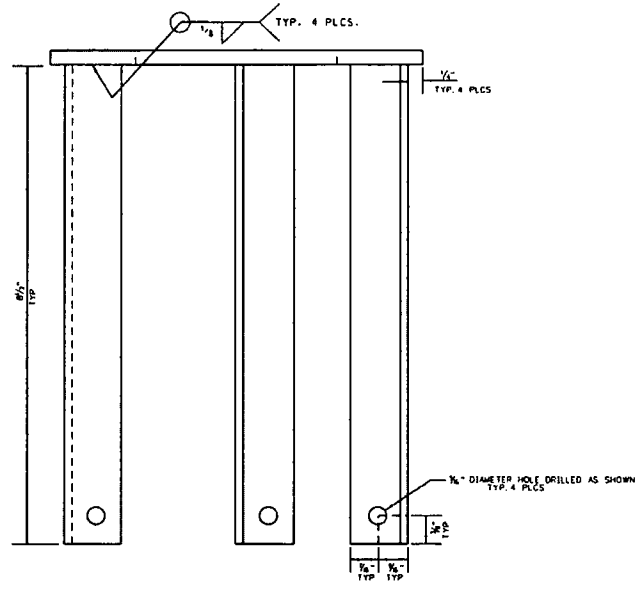

PROTECTIVE CAGE ASSEMBLY
SECTION VIEW
C-C

ECP-10-000208

INSTALLATION SKETCH 003

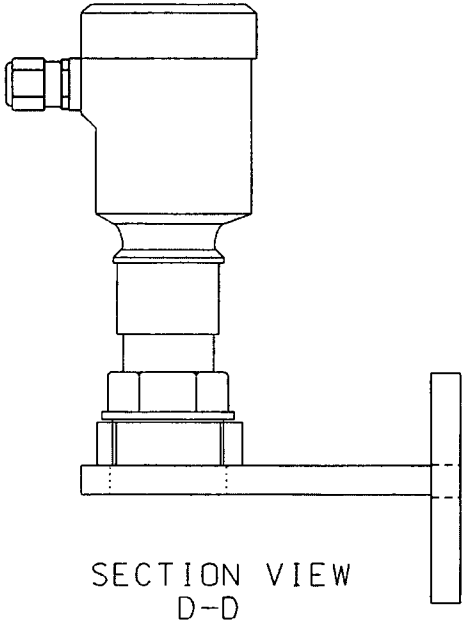

SECTION VIEW
D-D

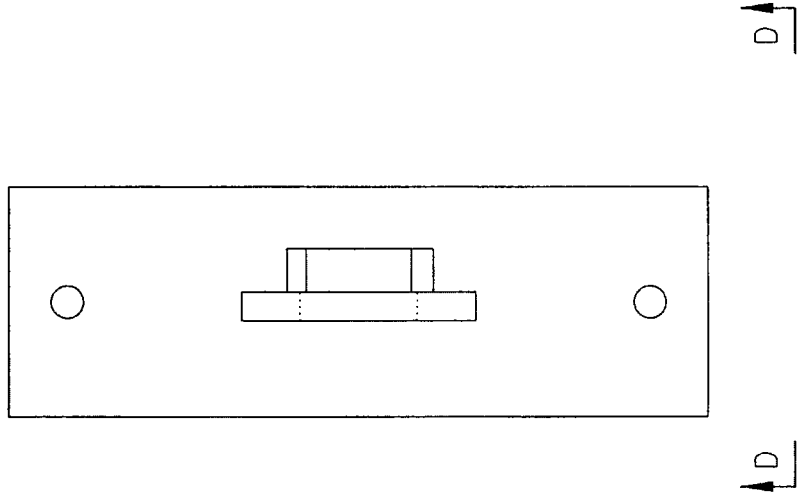

ANCHOR BRACKET MOUNTING ASSEMBLY
ELEVATION VIEW

ANCHOR BRACKET ASSEMBLY BILL OF MATERIALS

QTY	DESCRIPTION
1	PLATE, TYPE 316 SS, 1/2"x 4"x1'-0"
1	PLATE, TYPE 316 SS, 1/2"x 4"x 0'-6"
1	HALF COUPLING, SS, 1 1/2" NPT
2	ANCHOR BOLT, HILTI KB III, SS, 3/8" DIAMETER x 3" LONG

NOTES:

1. ALL MATERIAL TO BE TYPE 304 OR 316 SS OR EQUAL
2. ALL CORNERS AND EDGES TO BE GROUND SMOOTH
3. BRACKET TO BE MOUNTED USING 3/8" DIAMETER SS HILTI KWIK BOLT III ANCHORS. MIN EMBED TO BE 1 5/8"
4. NO REBAR SHALL BE CUT FOR INSTALLATION OF CEA'S. RELOCATE BRACKET AS NECESSARY TO AVOID REBAR.
5. WELD ELECTRODE SHALL BE E316-XX OR E304-XX AS REQ.

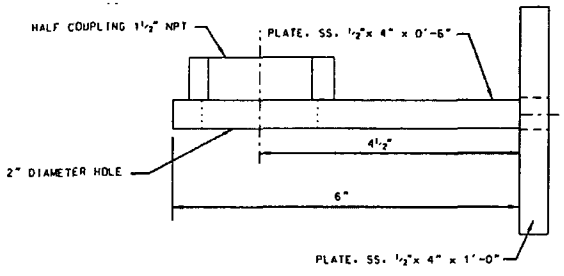

SECTION VIEW
D-D

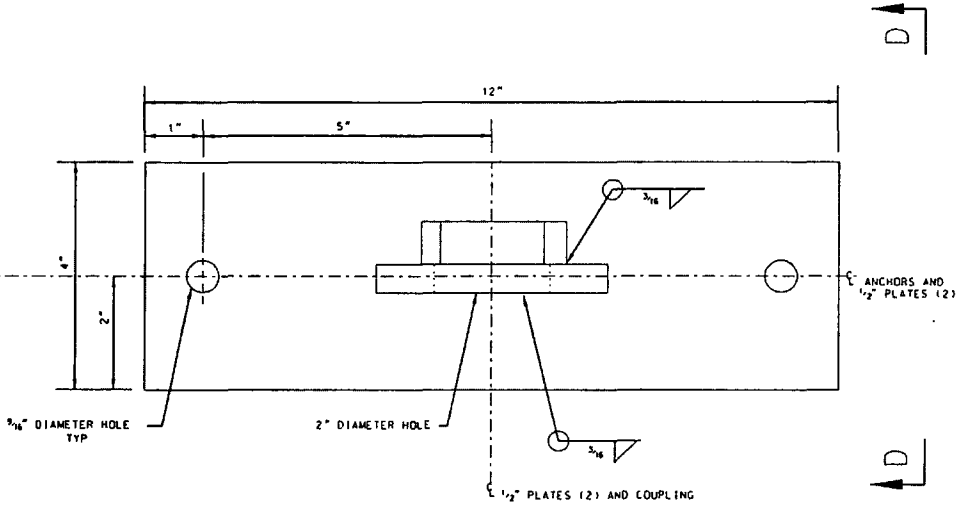

ANCHOR BRACKET MOUNTING ASSEMBLY
ELEVATION VIEW

ECP-10-000208

INSTALLATION SKETCH 004

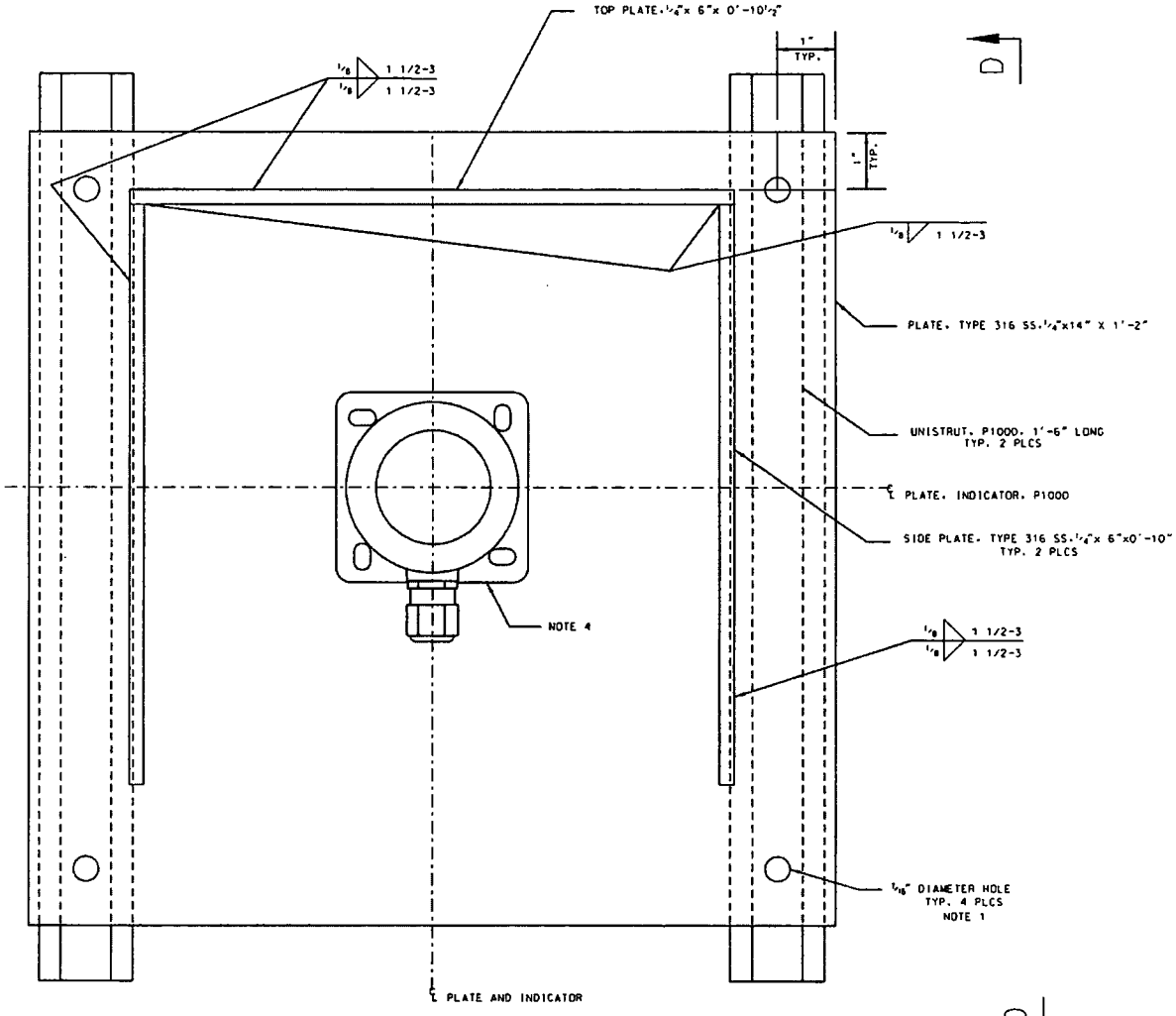

NOTES:

1. MOUNT PLATE TO UNISTRUT CHANNEL USING 3/8" SS BOLTS AND UNISTRUT SPRING NUTS
2. MOUNT UNISTRUT P1000 CHANNELS USING HILTI KWIK BOLT III ANCHORS 3/8" DIAMETER SS MIN EMBED 1 3/8"
3. ALL MATERIAL TO BE TYPE 304 OR 316 SS UNLESS NOTED.
4. MOUNT INSTRUMENT TO BACK PLATE USING 1/4-20 SS BOLTS HOLES TO BE DRILLED AND TAPPED IN BACK PLATE PER VENDOR TEMPLATE
5. UNISTRUT CHANNELS MAY BE RUN VERTICAL OR HORIZONTAL EXACT ORIENTATION TO BE DETERMINED BY FIELD
6. TIGHTEN ALL BOLTS TO A SNUG TIGHT CONDITION
7. ANCHOR BOLTS AND HOLES NOT SHOWN FOR CLARITY
8. NO REBAR SHALL BE CUT IN THE INSTALLATION OF THE CEA'S.
9. WELD ELECTRODE SHALL BE E316-XX OR E304-XX AS REQ.

LEVEL INDICATOR MOUNTING ASSEMBLY
ELEVATION VIEW

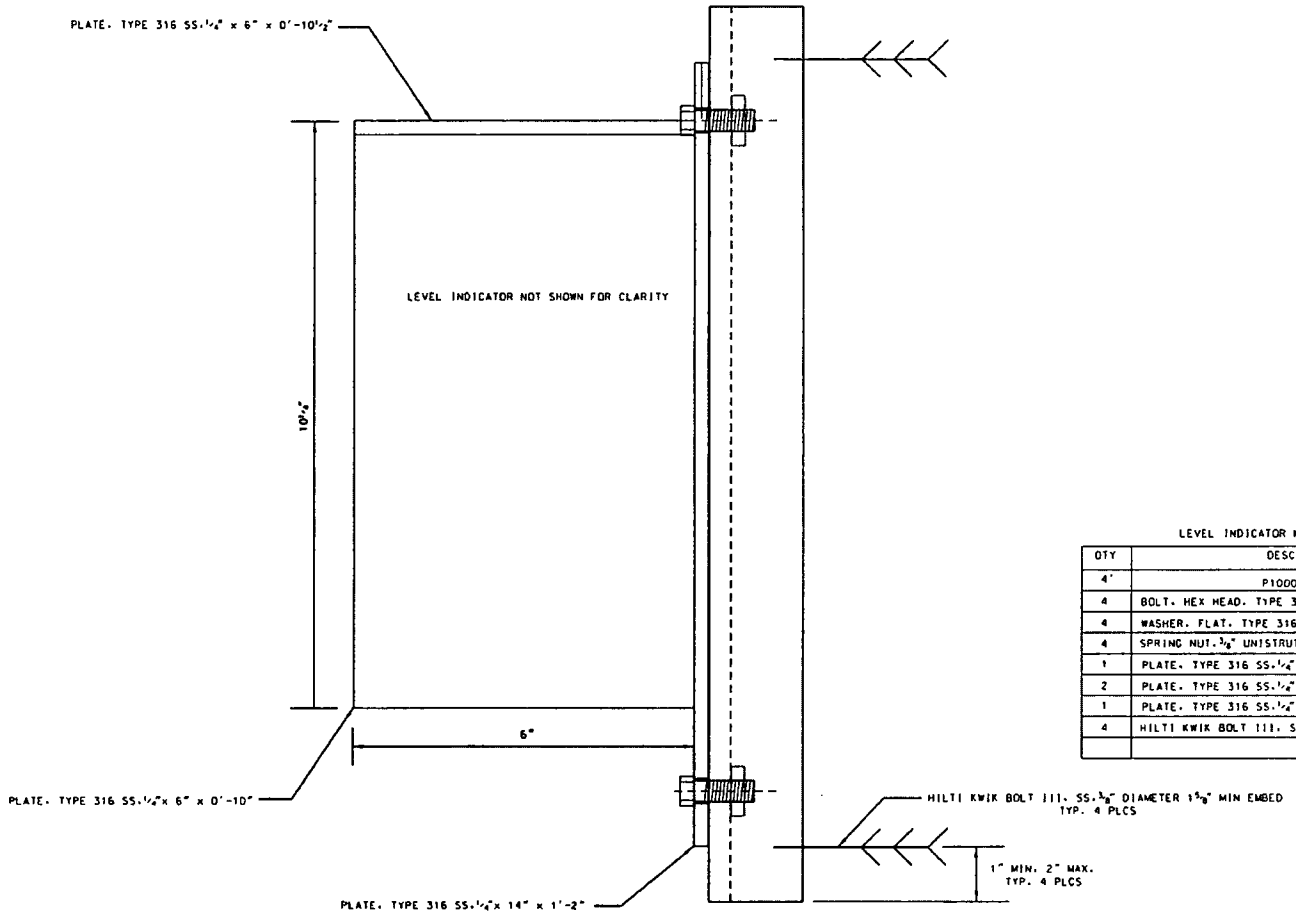

SECTION VIEW
D-D

LEVEL INDICATOR MOUNTING DETAIL BILL OF MATERIALS

QTY	DESCRIPTION
4'	P1000 UNISTRUT
4	BOLT. HEX HEAD. TYPE 316 SS. 3/8-16. 1 " LONG
4	WASHER. FLAT. TYPE 316 SS. 3/8"
4	SPRING NUT.3/8" UNISTRUT
1	PLATE. TYPE 316 SS.1/4"x 14" x 1'-2"
2	PLATE. TYPE 316 SS.1/4"x 6" x 0'-10"
1	PLATE. TYPE 316 SS.1/4" x 6" x 0'-10 1/2"
4	HILTI KWIK BOLT III. SS.3/8" DIAMETER 2 1/4" LONG

ECP-10-000208 INSTALLATION SKETCH 005 SHEET 1 OF 2

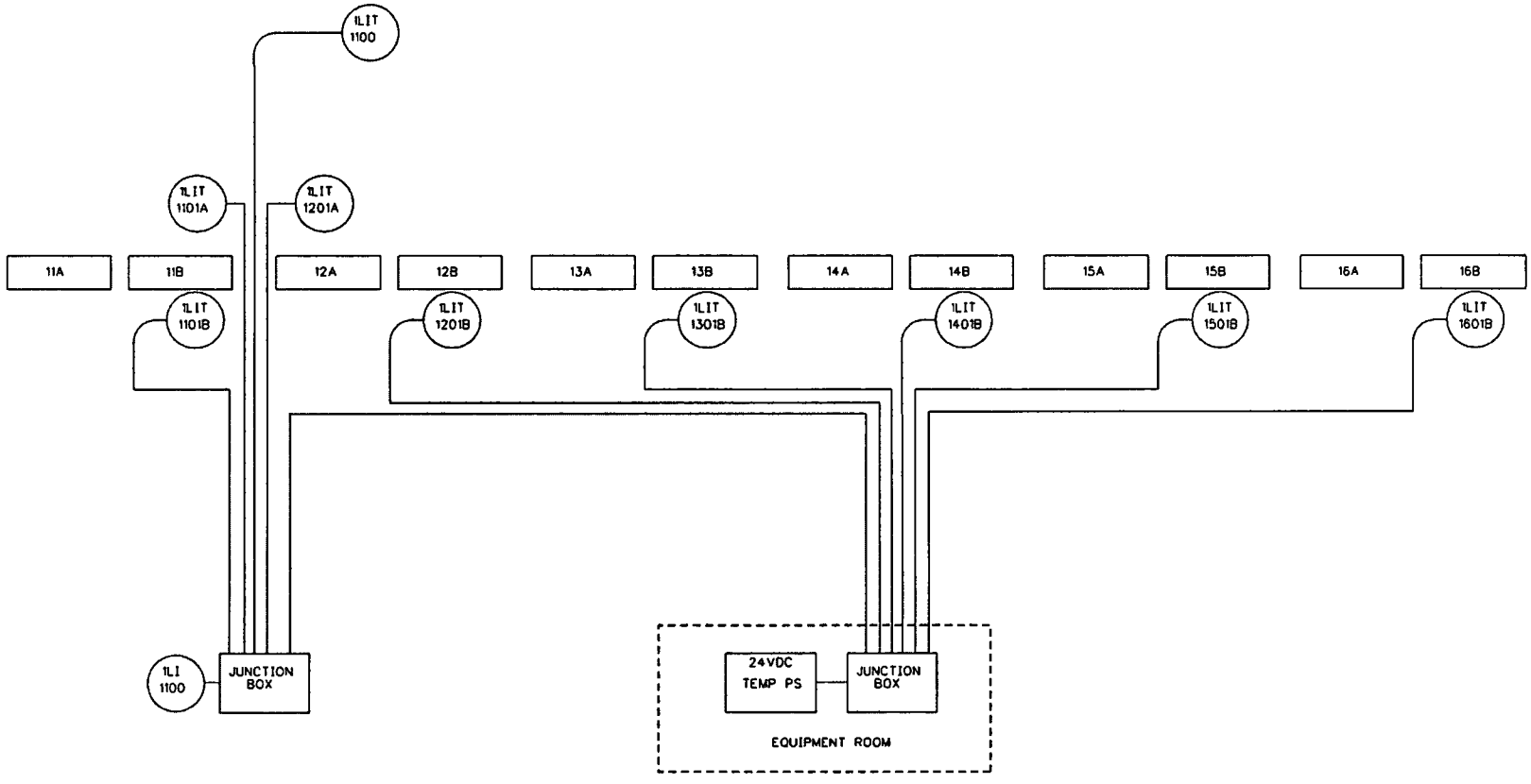

ECP-10-000208

INSTALLATION SKETCH 005

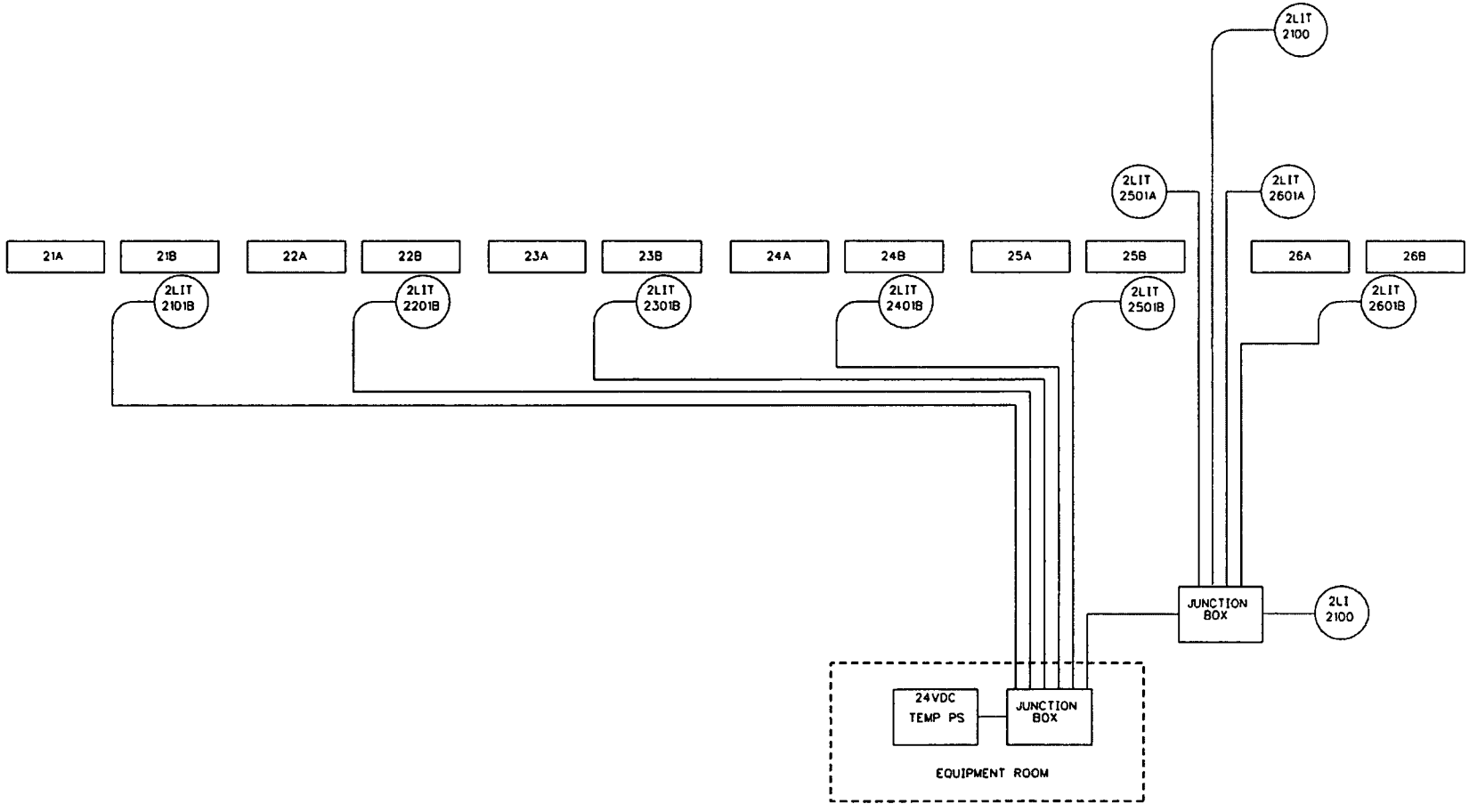

ECP-10-000208

INSTALLATION SKETCH 006

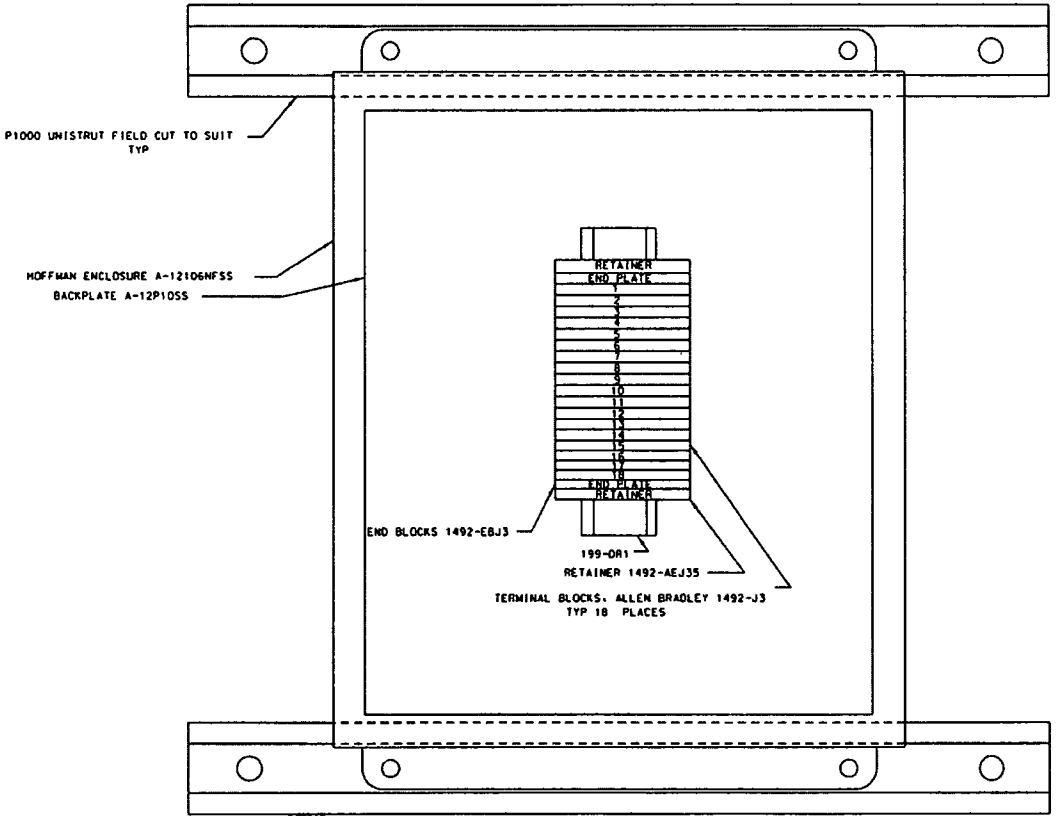

JUNCTION BOX
(COVER REMOVED)

NOTES

1. JUNCTION BOXES TO BE LOCATED BY FIELD.
2. JUNCTION BOXES TO BE MOUNTED PER SKETCH AND E-406
3. JB TO BE ATTACHED USING SS 1/4-20 BOLTS, WASHERS AND SPRING NUTS

JUNCTION BOX MOUNTING DETAIL BILL OF MATERIALS

QTY	DESCRIPTION
6"	DIN RAIL 199-DR1, ALLEN BRADLEY OR EQUAL
18	TERMINAL BLOCKS, ALLEN BRADLEY 1492-J3
2	TERMINAL BLOCK END BLOCKS, ALLEN BRADLEY 1492-EBJ3
1	HOFFMAN ENCLOSURE A-12106NFSS
1	HOFFMAN ENCLOSURE, BACKPLATE A-12P10SS
4'	P1000 UNISTRUT FIELD CUT TO SUIT
4	BOLT, HEX HEAD, 316 SS, 1/4-20, 3/4" LONG
4	WASHER, FLAT, 316 SS, 1/4"
4	SPRING NUT, 1/4-20 UNISTRUT P1006-1420
2	TERMINAL BLOCK END RETAINER, ALLEN BRADLEY 1492-EAJ35

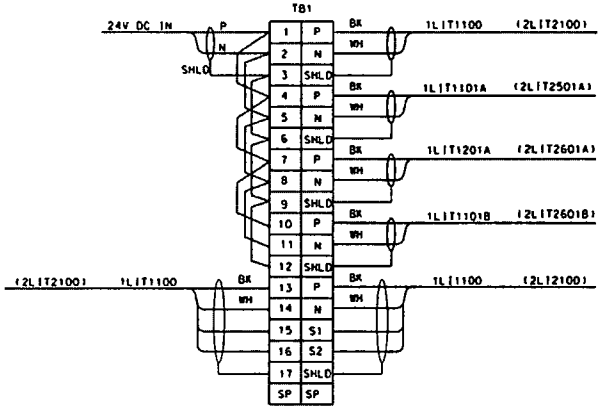

CONNECTION DETAIL
JUNCTION BOX TYPE B

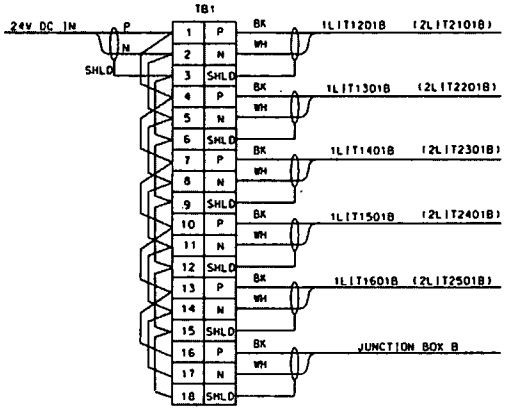

CONNECTION DETAIL
JUNCTION BOX TYPE A

NOTES:

1. JUNCTION BOX TO BE LOCATED BY FIELD
2. INSTALL DIN RAIL TO ALLOW FOR MORE BLOCKS IN THE FUTURE

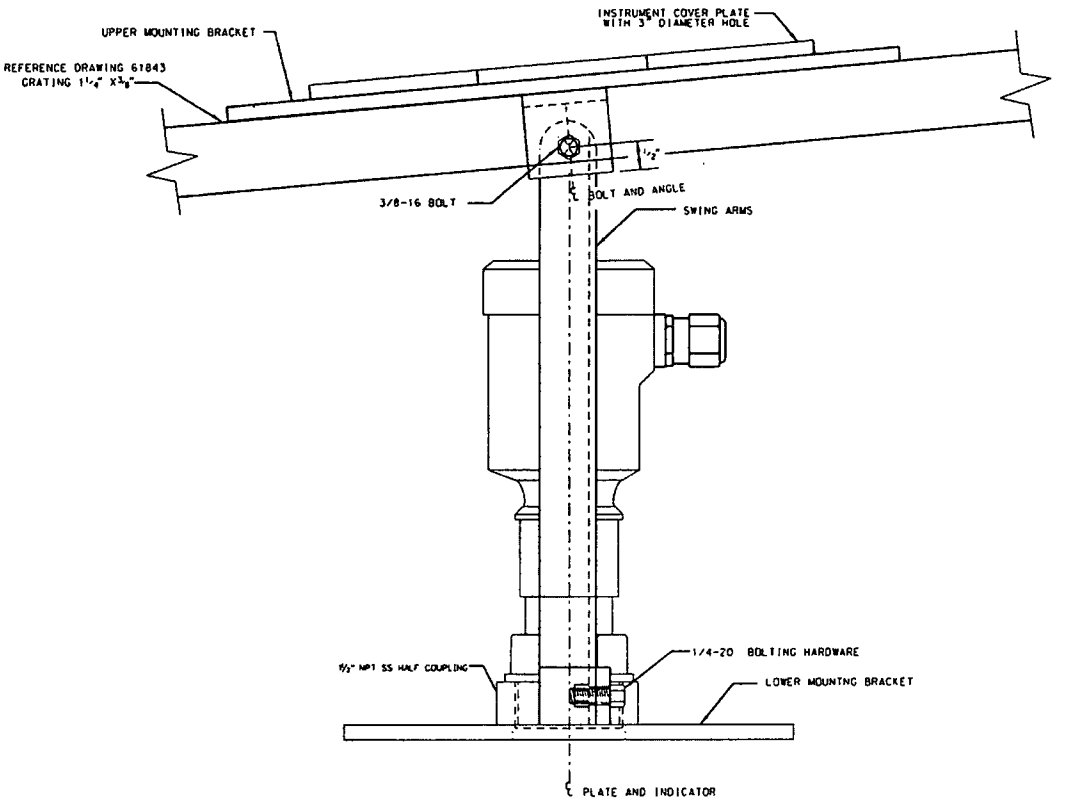

ELEVATION VIEW
BAY LEVEL
MOUNTING BRACKET ASSEMBLY

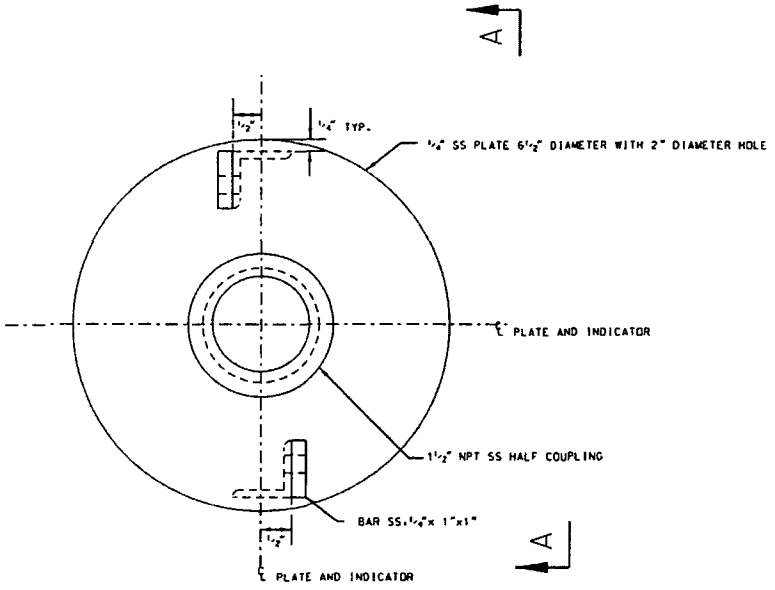

PLAN VIEW
BAY LEVEL
LOWER MOUNTING BRACKET

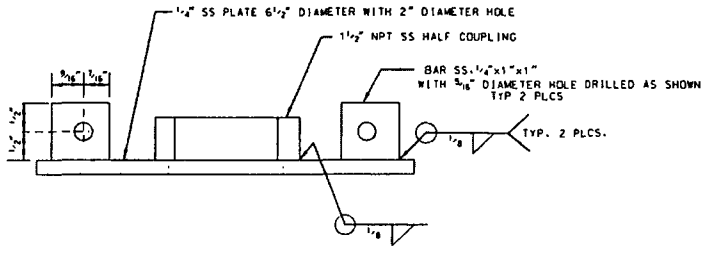

SECTION VIEW
A-A

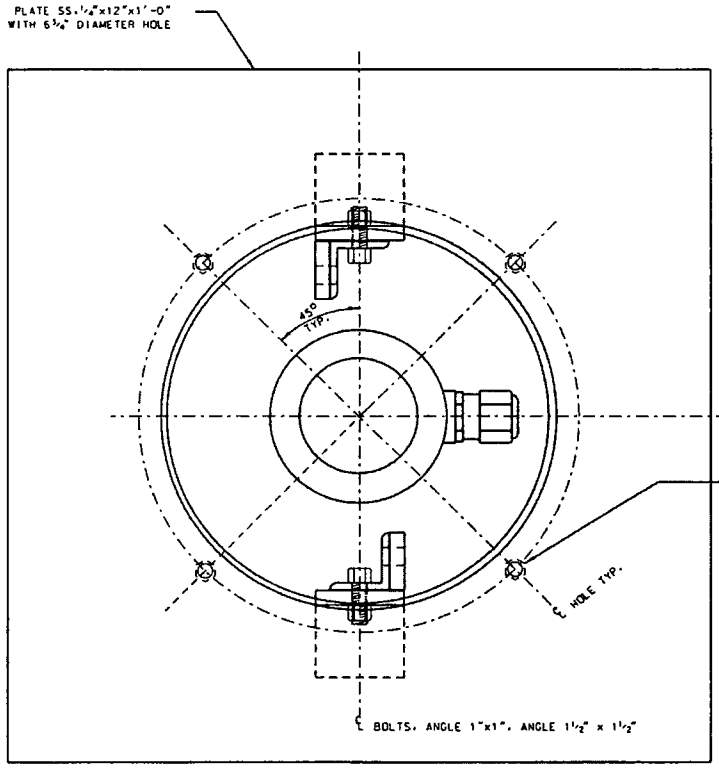

PLAN VIEW
BAY LEVEL
UPPER MOUNTING BRACKET
(INSTRUMENT COVER NOT SHOWN)

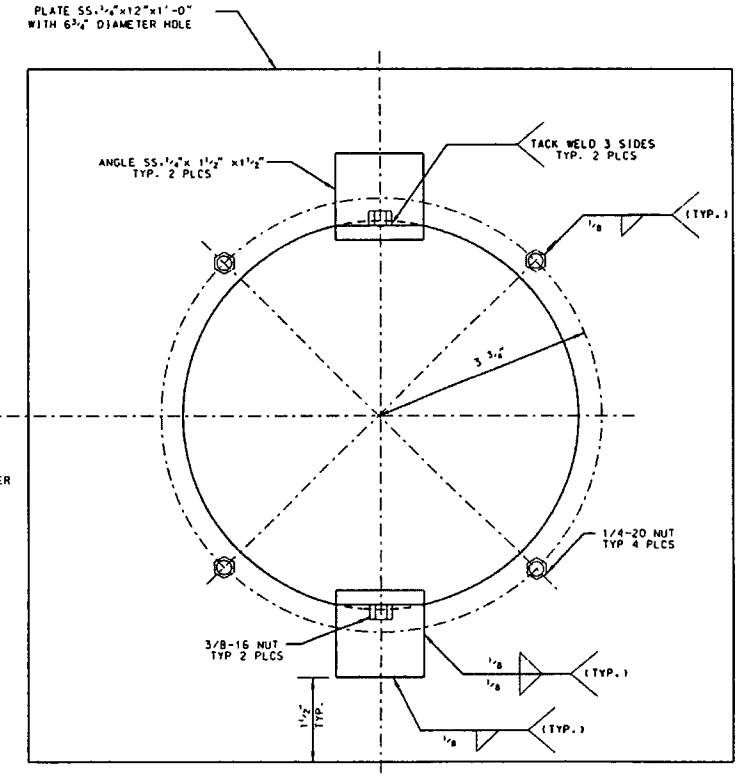

PLAN VIEW BOTTOM SIDE
BAY LEVEL
UPPER MOUNTING BRACKET

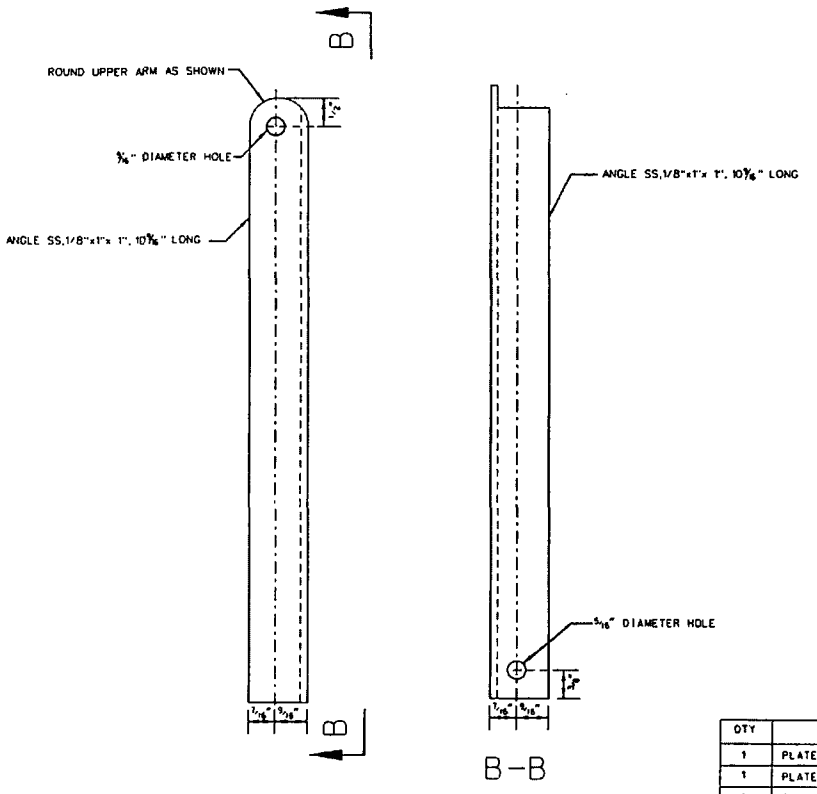

BAY LEVEL INSTRUMENT
SWING ARM DETAIL
2 REQ.

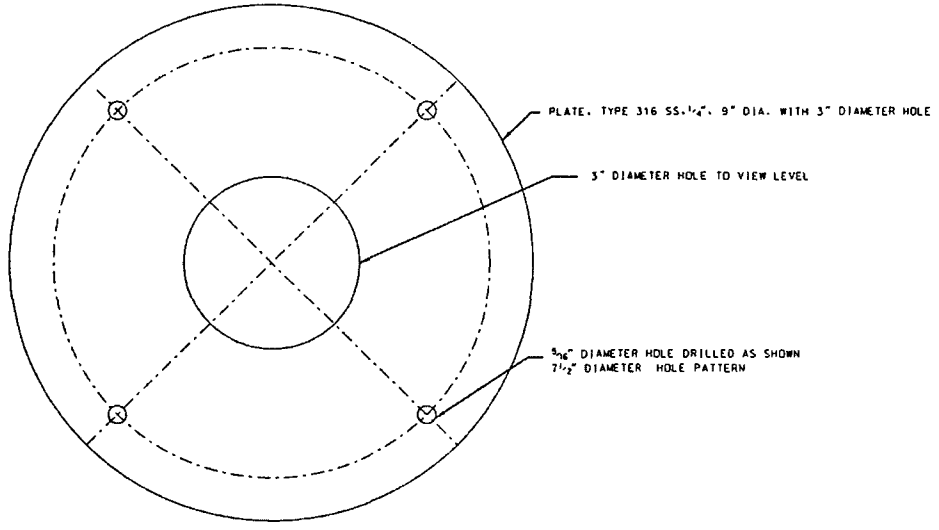

BAY LEVEL INSTRUMENT
INSTRUMENT COVER PLATE

BAY LEVEL BRACKET ASSEMBLY BILL OF MATERIALS

QTY	DESCRIPTION
1	PLATE, TYPE 316 SS,1/4"x12"x 1'-0" WITH 6 3/4" DIAMETER HOLE
1	PLATE, TYPE 316 SS,1/4", 6 1/2" DIAMETER WITH 2" DIAMETER HOLE
1	BAR, TYPE 316 SS,1/4"x1"x1"
6	HEX HEAD BOLTS, SS, 1/4-20 LENGTH AS REQ.
6	HEX NUT, SS, 1/4-20
2	ANGLE, SS,1/8"x1"x1", 10 9/16" LONG
2	ANGLE, SS,1/4"x 1 1/2"x1 1/2", 1 1/2" LONG
2	HALF COUPLING, SS, 1 1/2" NPT
4	GRATING CLIPS AND SS BOLTING HARDWARE
2	HEX NUT, SS, 3/8-16
2	HEX HEAD BOLTS, SS, 3/8-16 x 1"
1	PLATE, TYPE 316 SS,1/4", 9" DIAMETER WITH 3" DIAMETER HOLE

NOTES:

1. ALL MATERIAL TO BE TYPE 304 OR 316 SS OR EQUAL
2. ALL CORNERS AND EDGES TO BE GROUND SMOOTH
3. UPPER MOUNTING BRACKET PLATE TO BE ATTACHED TO GRATING USING GRATING CLIPS AND SS BOLTS AND HARDWARE AS REQUIRED.
4. VERIFY THE LEVEL PROBE IS PLUMB AND LEVEL PRIOR TO TIGHTENING BOLTS
5. SECURE INSTRUMENT CABLE TO ENSURE IT DOES NOT AFFECT POSITION OF INSTRUMENT AND IS PROPERLY SUPPORTED
6. ENSURE THE GRATING CUTOUT DOES NOT EXCEED 96 SQUARE INCHES MINIMIZE SIZE OF OPENING, SHALL BE 8" x 8" +/- 1". GRATING SHALL BE BANDED AS REQUIRED PER SITE PROCEDURES.
7. INSTRUMENT SHALL BE PLACED TO ENSURE IT DOES NOT IMPACT HINGED GRATING COVERS.
8. BOLT COVER PLATE TO UPPER MOUNTING PLATE AS SHOWN USING 1/4-20 BOLTS
9. TIGHTEN ALL BOLTS TO A SNUG TIGHT CONDITION
10. WELD ELECTRODE SHALL BE E316-XX OR E304-XX AS REQ.

ECP-10-000208 INSTALLATION SKETCH 009 SHEET 1 OF 2

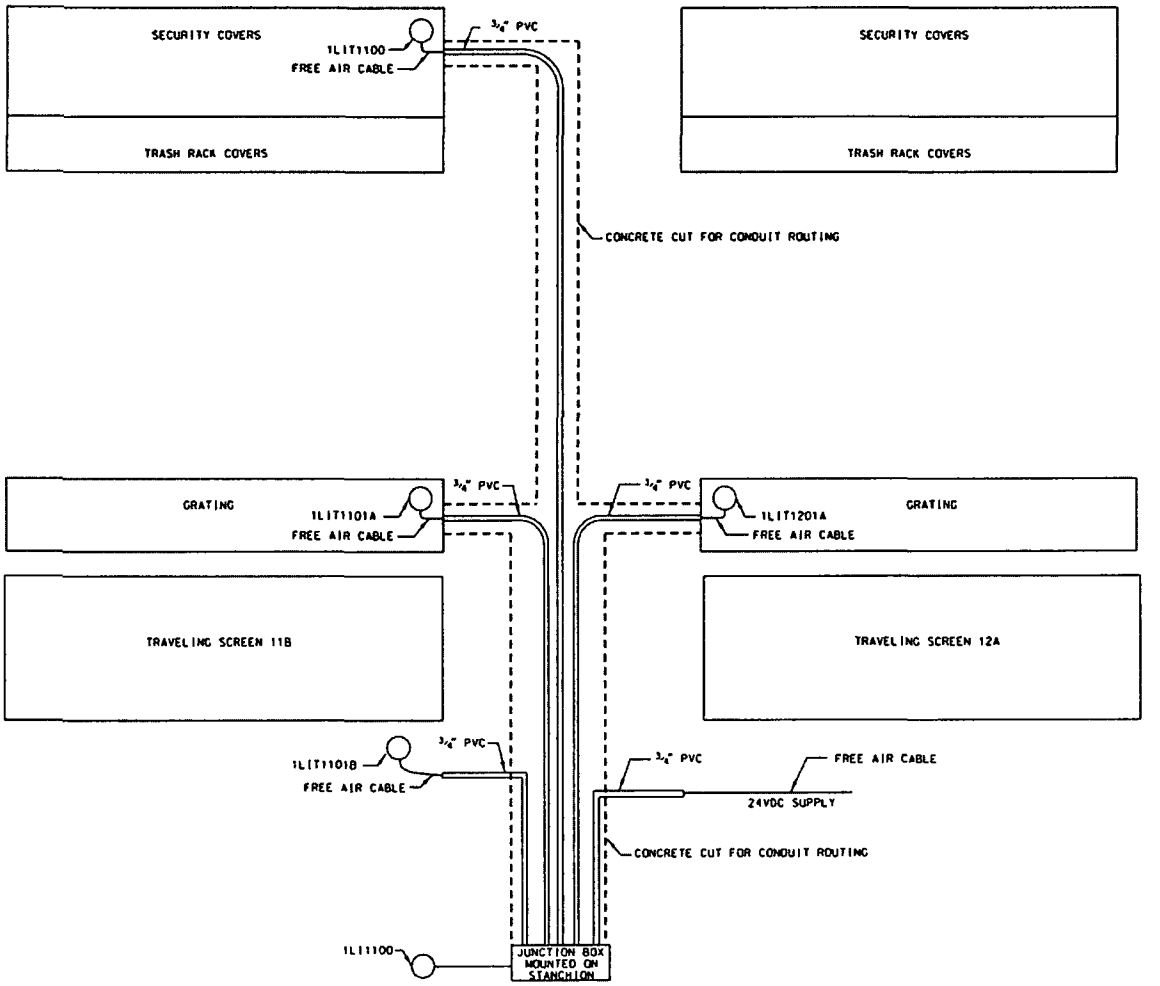

ECP-10-000208 INSTALLATION SKETCH 009 SHEET 2 OF 2

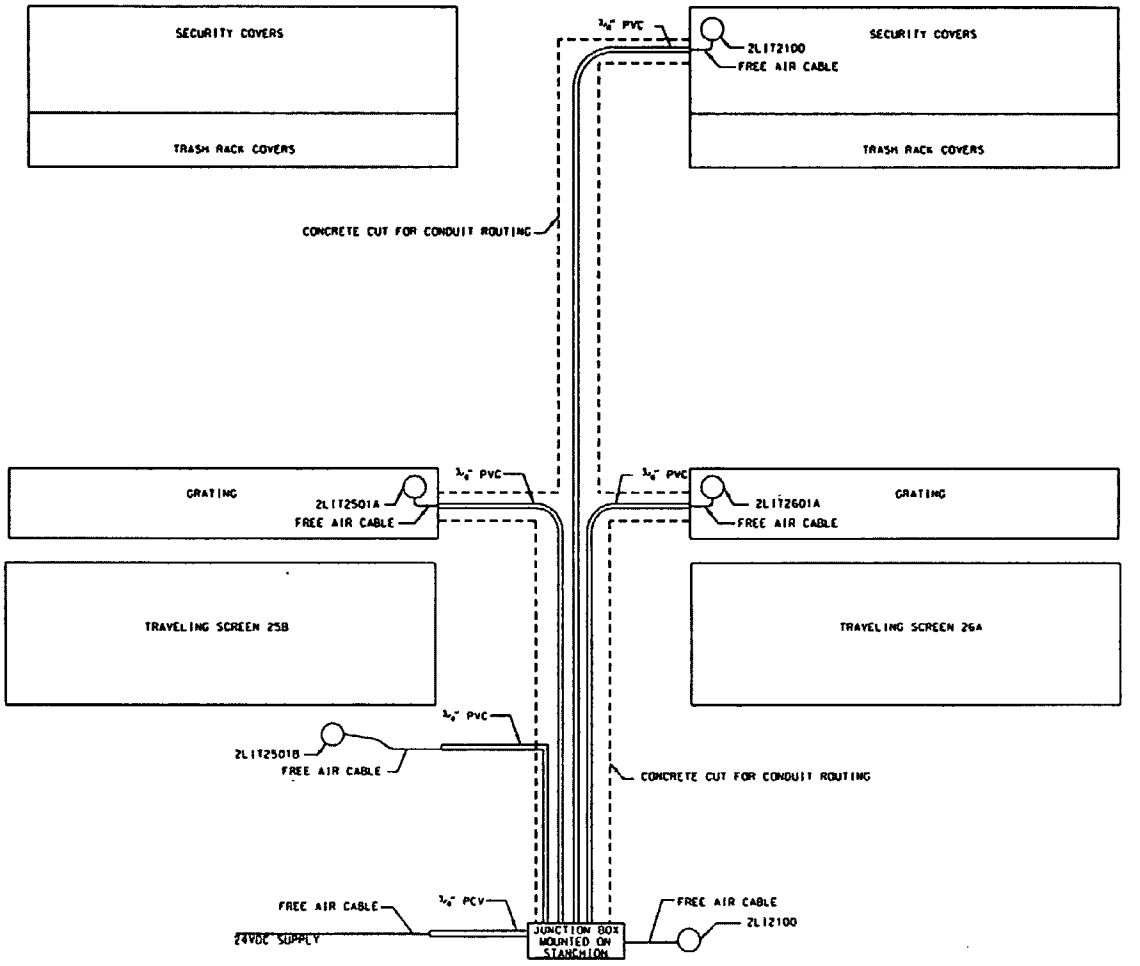

ECP-10-000208
FORM 11, ECP MATERIALS LIST

COMPONENT/PART	MAKE/ MODEL or TYPE	QUANTITY/ UNITS	PO/SRI NO./ REQ NO. or SRI NO.	STOCK ID NO.	Q-LIST CLASS	PRINT/ CODE or STAND.	ON ORDER (Y/N)	REMARKS
Radar Level Probe	Ohmart-Vega/PS65. UXMNDH KNAX	18			NSR		Y	
Remote Display w/ Wall Mount Adapter	Ohmart-Vega/DIS61 .UFKNB	2			NSR		Y	
24VDC Power Supply 1.5A	Phoenix Contact/MI NI-SYS-PS-100-240AC/24D C/1.5	2			NSR			Or Equivalent
2/C 20 AWG T.S.P	Belden/1033 A	2000 ft			NSR			Or Equivalent
4/C 20 AWG w/ shield	Belden/3016 A	100 ft			NSR			Or Equivalent
Pigtail power cord – 4ft	FarmTek/W F4629	2			NSR			Or Equivalent

Refer to Installation Sketches for additional BOM items.

State as appropriate that when a Purchase Order (P.O.) is specified on the Bill of Materials, the item purchased shall be from that P.O. and no substitution is allowed without the concurrence of the Responsible Engineer.

FORM 13, RECORD OF WALKDOWN
(Page 1 of 2)

ECP Supp No.: ECP-10-000208 **Rev. No.:** 0000

Type of Walkdown Completed:	**Walkdown Lead:** Brad Wright **Date Completed:** 3/17/2010 **System/structure/component/location:** Unit 1 & 2 Intake Structure **Objective:** Walkdown general layout for radar probe locations and identify any issues
☒ CONCEPTUAL or PRE-DESIGN ☐ POST DESIGN/PRE-INSTALLATION ☐ POST CONSTRUCTION/INSTALLATION ☐ TURNOVER/CLOSEOUT ☐ OTHER:	

REQUIRED Walkdown Participants – Check Box for All that Apply
Identify the Involved Personnel by Name; Indicate Agreement with Walkdown Conclusions

☐ Change Requester:	☐ Design Engineer:	☐ System Engineer:	☐ Project Manager:
☒ Designer (Mech/Civil): Dave Earp	☐ Designer (E&C)	☐ Planner (Mech.):	☒ Planner (E&C): Donald Debuhr
☐ Maintenance (Mech.):	☐ Maintenance (E&C):	☐ Procurement Engineer:	☐ Health Physics:
☐ Design Engr (Elec):	☐ Design Engr (I&C):	☒ Design Engr (Mech): Charlie LaRue (S&L)	☐ Design Engr (Civil):
☐ Operations:	☐ ISI:	☐ Fire & Safety:	☐ Test Coordinator:
☐ Simulator or Training:	☐ Nuclear Training:	☐ As-needed participant:	☐ As-needed participant:

OPEN ISSUES AND EXCEPTIONS LISTING:

Description of Open Item or Issues Identified	Resolution Actions	Resp Org	ECD/AI & Actions
10" penetrations have interference issues with piping	Install probes in 6" penetrations	S&L	

USE ADDITIONAL SHEETS AS REQUIRED Check if additional sheets used ☐

FORM 13, RECORD OF WALKDOWN

ECP Supp No.: ECP-10-000208 **Rev. No.:** 0000

Type of Walkdown Completed:	**Walkdown Lead:** Brad Wright **Date Completed:** 3/24/2010 **System/structure/component/location:** Unit 1 & 2 Intake Structure **Objective:** Locate radar probe power supply location, locate bay level locaions, and identify conduit routing
☒ CONCEPTUAL or PRE-DESIGN ☐ POST DESIGN/PRE-INSTALLATION ☐ POST CONSTRUCTION/INSTALLATION ☐ TURNOVER/CLOSEOUT ☐ OTHER:	

REQUIRED Walkdown Participants – Check Box for All that Apply
Identify the Involved Personnel by Name; Indicate Agreement with Walkdown Conclusions

☐ Change Requester:	☐ Design Engineer:	☐ System Engineer:	☐ Project Manager:
☐ Designer (Mech/Civil):	☐ Designer (E&C)	☐ Planner (Mech.):	☐ Planner (E&C):
☐ Maintenance (Mech.):	☐ Maintenance (E&C):	☐ Procurement Engineer:	☐ Health Physics:
☐ Design Engr (Elec):	☐ Design Engr (I&C):	☒ Design Engr (Mech): Charlie LaRue (S&L)	☐ Design Engr (Civil):
☐ Operations:	☐ ISI:	☐ Fire & Safety:	☐ Test Coordinator:
☐ Simulator or Training:	☐ Nuclear Training:	☐ As-needed participant:	☐ As-needed participant:

OPEN ISSUES AND EXCEPTIONS LISTING:

Description of Open Item or Issues Identified	Resolution Actions	Resp Org	ECD/AI & Actions
None			

USE ADDITIONAL SHEETS AS REQUIRED Check if additional sheets used ☐

FORM 16, FIRE PROTECTION/APPENDIX R REVIEW ELECTRICAL DESIGN FEATURES CHECKLIST
(Page 1 of 2)

ECP Supp No.: ECP-10-000208 **Rev. No.: 0000**

Does the proposed engineering in its final form, as well as during interim installation procedures:			
A. Does the ECP directly or indirectly involve Appendix R equipment?	☐ YES	☒ NO	☐ N/A
B. Does the ECP add, relocate or change equipment whose operation would be required to achieve the safe shutdown functions identified in the Interactive Cable Analysis (ICA)? (Include equipment that provides additional safe shutdown systems boundary isolation, electrical distribution equipment changes (such as addition or deletion of loads, changes to relay settings) and electrically powered instruments.)	☐ YES	☒ NO	☐ N/A
C. Is Appendix R equipment being deleted?	☐ YES	☒ NO	☐ N/A
D. Does the ECP change the characteristics of Appendix R equipment?	☐ YES	☒ NO	☐ N/A
E. Does the ECP involve existing or adding new power, control, or instrumentation cables for Items A through D above?	☐ YES	☒ NO	☐ N/A
F. Does the ECP create a new potential associated circuit of concern?	☐ YES	☒ NO	☐ N/A
G. Does the ECP involve or add cables associated with Auxiliary Shutdown Panel isolation from the control room?	☐ YES	☒ NO	☐ N/A
H. Does the ECP affect compliance with requirements of, or affect drawings, statements, or analysis in the site Fire Protection Program, such as changes to fire rated compartmentation as shown on the drawings?	☐ YES	☒ NO	☐ N/A
Does the ECP involve changes to the automatic suppression system or standpipe and hose systems for safety-related structures?	☐ YES	☒ NO	☐ N/A
I. Does the ECP affect plant Technical Specifications, Technical Requirements Manuals, or FSAR positions related to Fire Protection?	☐ YES	☒ NO	☐ N/A
J. Does the ECP involve emergency lighting required for operation of safe shutdown equipment and access and egress routes thereto or require additional emergency lighting?	☐ YES	☒ NO	☐ N/A
K. Does the ECP affect communication systems that are being credited for use in shutting the plant down during a fire? Or does the modification introduce a new manual action that will require communication from an area of the plant for which the communication system has not been previously analyzed?	☐ YES	☒ NO	☐ N/A
	☐ YES	☒ NO	☐ N/A
L. Does the ECP require a revision to the ICA Database?	☐ YES	☒ NO	☐ N/A
M. Does the ECP require a change to the ASSARF packages?	☐ YES	☒ NO	☐ N/A
N. Does the ECP affect criteria for which a NRC-approved technical exemption request has been granted according to the site Fire Protection Program?	☐ YES	☒ NO	☐ N/A
O. Does the ECP affect cable trays with marinate tray covers required for Appendix R? For CCNPP, this refers specifically to trays ZD1CF07, ZE1CF19, ZF1CL17, and ZG1CL10 in Unit 1 containment and ZF2CL07, ZD2CF08, and ZE2CF18 in Unit 2 containment.	☐ YES	☒ NO	☐ N/A
P. Does the ECP affect calculations or AOPs associated with the ICA? (If, "YES," review required by Nuclear Engineering and Nuclear Operations.)	☐ YES	☒ NO	☐ N/A

FORM 16, FIRE PROTECTION/APPENDIX R REVIEW ELECTRICAL DESIGN FEATURES CHECKLIST
(Page 2 of 2)

ECP Supp No.: **ECP-10-000208** **Rev. No.:** **0000**

Discuss "YES" responses below. Indicate if the change is justified. Identify information in the site Fire Protection Program that will require update and for which changes are unacceptable. When comments are resolved, the resolution, along with appropriate justification, should be included.

NONE

The change ☐ does/ ☐ does not adversely affect the ability to achieve and maintain safe shutdown in the event of a fire.

Fire Protection Electrical Engineer: _____ _____

(Printed Name and Signature) Date

FORM 17, FIRE PROTECTION/APPENDIX R REVIEW FIRE PROTECTION DESIGN FEATURES CHECKLIST

ECP Supp No.: **ECP-10-000208** **Rev. No.:** **0000**

Does the proposed engineering in its final form, as well as during interim installation procedures:			
A. Add, delete or relocate combustible materials within the plant (any quantity of flammable/combustible liquid or combustible solid)?	☐ YES	☒ NO	☐ N/A
B. Affect Appendix R or controlled fire rated barriers (walls, floors, doors, dampers, penetrations). Add new barriers, remove or relocate existing barriers, or modify the design of existing barriers in ways not previously approved? Use penetration seal designs which have not been previously approved? Affect the integrity of structural steel? Affect fire propagation requirements, including areas free of intervening combustible and radiant energy shields?	☐ YES	☒ NO	☐ N/A
C. Affect installed fire protection SSCs (sprinkler, halon, hose stations, smoke detection, heat detection, flame detection, etc.). Install new components within 36 inches of sprinklers/detectors/etc. or that block sprinkler spray patterns, or isolate portions of a room from normal circulation?	☐ YES	☒ NO	☐ N/A
D. Affect fire fighting equipment, fire suppression efforts, or post fire operations in any area of the plant?	☐ YES	☒ NO	☐ N/A
E. Add or relocate Safety Related equipment (specifically equipment which might be adversely affected by water spray) in an area of the plant protected by a sprinkler system?	☐ YES	☒ NO	☐ N/A
F. Add/modify fire hazards within the plant in any way?	☐ YES	☒ NO	☐ N/A
G. Alter the physical arrangement or configuration of an area that affects fire protection equipment/systems, access and egress routes, emergency lighting, etc?	☐ YES	☒ NO	☐ N/A
H. Utilize construction/modification techniques that may result in an inadvertent operation of fire protection equipment or systems.	☐ YES	☒ NO	☐ N/A
I. Alter the location, function, design or material requirements of fire protection equipment and/or systems?	☐ YES	☒ NO	☐ N/A
J. Affect the Reactor Coolant Pump/Motor Lube Oil Collection System?	☐ YES	☒ NO	☐ N/A
K. Affect compliance with requirements of source documents as applicable such as the SER, UFSAR, TRM, etc.?	☐ YES	☒ NO	☐ N/A
L. Affect compliance with guidelines provided in applicable National Fire Protection Association Codes and Standards?	☐ YES	☒ NO	☐ N/A
M. Affect compliance with guidelines provided in applicable Nuclear Electric Insurance Limited Loss Control Standards?	☐ YES	☒ NO	☐ N/A
N. Alter or affect what has previously been stated in the site Fire Protection Program such as drawings, statements, or analysis (combustible loading or fire hazards)?	☐ YES	☒ NO	☐ N/A
O. Affect criteria for which an NRC-approved technical exemption request has been granted?	☐ YES	☒ NO	☐ N/A

FORM 17, FIRE PROTECTION/APPENDIX R REVIEW FIRE PROTECTION DESIGN FEATURES CHECKLIST

ECP Supp No.: **ECP-10-000208** **Rev. No.:** **0000**

"YES" responses shall be discussed and appropriately evaluated below. Identify information in the Fire Protection Program that will require update and/or for which the activity is considered unacceptable.

This change installs approximately 600ft of cable routed free-air on the intake structure deck. This installation is outside the intake structure and does not have any fire protection requirements. It has been recommended that cable used be flame retardant in accordance with IEEE 383. Cable specified on Form 11 , ECP Material List, meets the specifications of IEEE 383 for Class 1E flame retardant cable.

The change ☐ does/ ☒ does not adversely affect the ability to achieve and maintain safe shutdown in the event of a fire.

Fire Protection Engineer: N/A per Chris Dobry

(Printed Name and Signature) Date

OFFSITE DOSE CALCULATION MANUAL

Revision 8

Calvert Cliffs Nuclear Power Plant

PREPARED BY: _____ DATE: 17-Aug-04
Technical Writer

REVIEWED BY: _____ DATE: 17-Aug-04
RETS Program Manager

REVIEWED BY: _____ DATE: 8/18/04
General Supervisor - Chemistry

REVIEWED BY: _____ 04-040 DATE: 5/24/04
POSRC Meeting Number

APPROVED BY: _____ DATE: 8/18/04
Plant General Manager

EXECUTIVE SUMMARY OF CHANGES

REV	CHG	PAGE	DESCRIPTION
8	0	117	The TE-001 test is now STP-M-462-2, the footnote was changed to reflect this change.
		121	Simplified equation 29G by rewriting it into an equivalent form.
		122	Deleted parameters no longer in equation 29G and changed the units on background to microcuries per second.
		124	Simplified equation 29G by rewriting it into an equivalent form.
		125	Deleted parameters no longer in equation 29G and changed the units on background to microcuries per second.
		134	The TE-001 test is now STP-M-462-2, the footnote was changed to reflect this change.
		136	Parentheses were changed in Equation 27G.
		139	Parentheses were changed in Equation 27G.
		232	Changed the flowrate for Unit 2 Main Plant Vent Stack to accurately reflect current plant conditions as measured by STP-M-462-2.
		314	Changed the description of several sample stations to accurately describe proper sector designations. These changes are made based on satellite imagery.
		316	Added 2 new TLD Sample locations to map. The new sample locations ensure tht each meteorological sector has a TLD.

LIST OF EFFECTIVE PAGES

PAGES	REVISION/CHANGE
1-317	8

PROCEDURAL ALTERATIONS

PAGES	REVISION/CHANGE
	08/00

TABLE OF CONTENTS

Part 1.0: PURPOSE AND APPLICABILITY/SCOPE 6

Part 2.0 : DEFINITIONS AND REFERENCES 8

Developmental References 13
Performance References 15

PArt 3.0 / 4.0 : CONTROLS AND SURVEILLANCE REQUIREMENTS 16

Monitoring Instrumentation 18

Radioactive Gaseous Effluent 18
Radioactive Liquid Effluent 23

Radioactive Effluents 28

Liquid Effluents: 28
Gaseous Effluents: 34
Total Dose 41

Radiological Environmental Monitoring 42

Program 42
Land Use Census 54
Interlaboratory Comparison Program 55

Part 5.0 : CALCULATIONAL METHODOLOGIES 56

Radioactive Liquid Effluents 56

Release Pathways [B527] 56
Types of Liquid Releases 58
Processing Equipment 58
Liquid Effluent Radiation Monitor Alarm and Fixed Setpoints 59
Limits On Radionuclide Concentrations In Liquid Effluents 89
Limits On Cumulative Total Body Doses And Cumulative Organ Doses For Liquid Effluents 95
Limits For The Liquid Waste Processing System 102

Radioactive Gaseous Effluents 105

Release Pathways [B527] 105
Types of Gaseous Releases 110
Processing Equipment 110
Gaseous Effluent Radiation Monitors And Setpoints 111
Annual Total Body Dose Rate Due To Noble Gases In Gaseous Effluents 151
Annual Skin Dose Rate Due To Noble Gases In Gaseous Effluents 159
Annual Organ Dose Rates Due To Iodines And Particulates In Gaseous Effluents 166
Cumulative Gamma Air Doses Due To Noble Gases In Gaseous Effluents 172
Cumulative Beta Air Doses Due To Noble Gases In Gaseous Effluents 180
Cumulative Organ Doses Due To Iodines And Particulates In Gaseous Effluents 187
Limits For The Gaseous RadWaste Processing System 194
Limits On Total Annual Dose – Gases, Liquids, and Uranium Fuel Cycle Sources 196
Special Exceptions and Assumptions For Calculation of Doses and Dose Rates 200

TABLE OF CONTENTS (Continued)

Radiological Environmental Monitoring Program 202

Radiological Environmental Monitoring Program 202
Land Use Census 207
Interlaboratory Comparison Program 209
Annual Radiological Environmental Operating Report 210
Independent Spent Fuel Storage Installation Monitoring Program 213

Radioactive Effluent Release Report 217

Introduction 217
Responsibilities 217
Report Contents 217
Report Submittal 218

Administration Of The ODCM 219

Introduction 219
Controls On The ODCM 219
Surveillance Requirements 220
Responsible Company Organizations 220
Initiating Conditions 220
Calculation Methodologies 221
Corrective actions 221

Bases 221

ATTACHMENTS:
Attachment 1 Final Grading And Drainage Plan 222
Attachment 2 Sources of Liquid Radioactive Waste 223
Attachment 3 226
Attachment 4 Block Diagram of Liquid Radioactive Waste Systems 227
Attachment 5 Radionuclides in Typical Radwaste Discharges 228
Attachment 6 Liquid Effluent Dose Factors (mrem/hr per uCi/ml) 229
Attachment 7 General Information Related to Gaseous Releases via the Main Vents 232
Attachment 8 General Information Related to Gaseous Releases via Pathways other than the Main Vents 233
Attachment 9 Block Diagram of Gaseous Radioactive Waste Systems 234
Attachment 10 Noble Gas Dose Factors 235
Attachment 11 Empirical Derivation Of Site-Specific Dose Factors 236
Attachment 12 Gaseous Effluent Pathway Dose Factors 241
Attachment 13 Environmental Monitoring Sites for REMP 307
Attachment 14 Radiological Environmental Monitoring Program Surveillances for Direct Radiation 308
Attachment 15 Radiological Environmental Monitoring Program Surveillances for Airborne Activity 309
Attachment 16 Radiological Environmental Monitoring Program Surveillances for Waterborne Activity 310
Attachment 17 Radiological Environmental Monitoring Program Surveillances for Ingestible Activity 311
Attachment 18 Map of Environmental Monitoring Sites for REMP (5 Km Radius) 312
Attachment 19 Map of Environmental Monitoring Sites for REMP (10 Mile Radius) 313
Attachment 20 Environmental Monitoring Sites for ISFSI 314
Attachment 21 Map of Environmental Monitoring Sites for ISFSI 315
Attachment 22 Map of Environmental Monitoring Sites for ISFSI 316
Attachment 23 Effluent Radiation Monitors 317

PART 1.0: PURPOSE AND APPLICABILITY/SCOPE

PURPOSE

A. The ODCM lists the radiological effluent controls established by Technical Specifications 5.5.1 and 5.5.4 at Calvert Cliffs Nuclear Power Plant (CCNPP) for the purpose of ensuring the amount of radioactive materials released to the environment are as low as reasonably achievable.

B. The ODCM defines parameters and methodologies for calculating projected doses and dose rates resulting from the release of radioactive materials in liquid and gaseous effluents.

C. The ODCM defines parameters and methodologies for calculating alarm and fixed setpoints for Technical Specification related effluent radiation monitoring systems.

D. The ODCM defines and establishes controls for the Radiological Environmental Monitoring Program.

APPLICABILITY/SCOPE

A. The information presented in this manual is applicable to any division, department, section, or unit within the Calvert Cliffs Nuclear Power Plant (CCNPPI) which is either wholly or partly responsible for performing any of the activities listed in the PURPOSES section of this procedure. Responsible organizations include, but are not limited to, the following:

1. CCNPPI, CHEMISTRY SECTION
2. Constellation Generation Group, Technical Services, Analytical Chemistry Unit
3. CCNPPI, Electrical and Controls (E&C) Section
4. CCNPPI, Operations Section
5. CCNPPI, Radiation Safety Section

B. This manual is applicable to the determination of alarm and fixed setpoints for the following radioactive gaseous effluent monitoring instrumentation:

1. 0-RE-2191
2. 1/2-RE-5415
3. 1/2-RE-5416

C. This manual is applicable to the determination of alarm and fixed setpoints for the following radioactive liquid effluent monitoring instrumentation:

1. 0-RE-2201

2. 1/2-RE-4014

3. 1/2-RE-4095

D. This manual is applicable to the determination of the offsite doses and/or offsite dose rates due to the following:

1. Radioactive material in gaseous waste discharged from CCNPP

2. Radioactive material in liquid waste discharged from CCNPP

3. Radioactive material contained in outside storage tanks at CCNPP

E. This manual is applicable to the determination of the radiological effects on the environment due to the presence of Calvert Cliffs Nuclear Power Plant.

F. The ODCM is based on Technical Specifications and CCNPPIs interpretation of industry standards and practices.

PART 2.0 : DEFINITIONS AND REFERENCES

DEFINITIONS

The defined terms of this section appear in capitalized type and are applicable throughout these Controls.

ABNORMAL AND/OR UNANTICIPATED RADIOACTIVE RELEASE:

Any unplanned or uncontrolled release of radioactive material from the **SITE BOUNDARY**.

ACTION:

That part of a control which prescribes remedial measures required under designated conditions.

BATCH RELEASE:

A **BATCH RELEASE** is the discharge of liquid (or gaseous) waste of a discrete volume. (NUREG-0133, page 14)

CHANNEL CALIBRATION:

A **CHANNEL CALIBRATION** shall be the adjustment, as necessary, of the channel output such that it responds with the necessary range and accuracy to known values of the parameter which the channel monitors. The **CHANNEL CALIBRATION** shall encompass the entire channel including the sensor and alarm and/or trip functions, and shall include the **CHANNEL FUNCTIONAL TEST**. The **CHANNEL CALIBRATION** may be performed by any series of sequential, overlapping or total channel steps such that the entire channel is calibrated.

CHANNEL CHECK:

A **CHANNEL CHECK** shall be the qualitative assessment of channel behavior during operation by observation. This determination shall include, where possible, comparison of the channel indication and/or status with other indications and/or status derived from independent instrument channels measuring the same parameter.

CHANNEL FUNCTIONAL TEST:

a. An analog **CHANNEL FUNCTIONAL TEST** shall be the injection of a simulated signal into the channel as close to the primary sensor as practicable to verify **OPERABILITY** including alarm and/or trip functions.
b. A bistable **CHANNEL FUNCTIONAL TEST** shall be injection of a simulated signal into the channel sensor to verify **OPERABILITY** including alarm and/or trip functions.

COMPOSITE SAMPLE:

A **COMPOSITE SAMPLE** is a combination of individual samples obtained at intervals that are very short (e.g., hourly) in relation to the compositing time interval (e.g., monthly) to assure obtaining a representative sample. The sample volume should be proportionate to the volume of fluid, either liquid or gas, flowing through the system.

CONTINUOUS RELEASE

A **CONTINUOUS RELEASE** is the discharge of liquid (or gaseous) wastes of a nondiscreet volume; e.g., from a volume or system that has an input flow during the **CONTINUOUS RELEASE**. (NUREG-0133, P. 14.)

CONTINUOUS SAMPLING FREQUENCY

A **CONTINUOUS SAMPLING FREQUENCY** is a sampling arrangement that provides for uninterrupted sampling flow under normal operating conditions. During periods of sampling interruption, the requirement for continuous sampling is considered to be met, provided the interruption is less than one hour AND plant conditions are such that no adverse trend in effluents would be present during the period of interruption. Interruptions in continuous sampling during changing plant conditions OR interruptions in continuous sampling for greater than one hour must be evaluated to determine if an ODCM violation has occurred.

DOSE EQUIVALENT IODINE-131:

DOSE EQUIVALENT I-131 shall be that concentration of I-131 (microcuries per gram) which alone would produce the same thyroid dose as the quantity and isotopic mixture of I-131, I-132, I-133, I-134, and I-135 actually present. The thyroid dose conversion factors used for this calculation shall be those listed in Table III of TID-14844, "Calculation of Distance Factors for Power and Test Reactor Sites."

FREQUENCY NOTATION:

The frequency notation specified for the performance of Surveillance Requirements shall correspond to the intervals defined in the following Table .

Frequency Notation Table

NOTATION	FREQUENCY
S	At least once per 12 hours
D	At least once per 24 hours
W	At least once per 7 days
M	At least once per 31 days
Q	At least once per 92 days
SA	At least once per 6 months
R	At least once per 18 months
S/U	Prior to each reactor startup
P	Completed prior to each release
N.A.	Not applicable
Refueling Interval	At least once per 24 months

GAMMA ISOTOPIC ANALYSIS:

A **GAMMA ISOTOPIC ANALYSIS** is a analytical method of measurement used for the identification and quantification of gamma-emitting radionuclides.

GASEOUS RADWASTE PROCESSING SYSTEM:

A **GASEOUS RADWASTE PROCESSING SYSTEM** is any system designed and installed to reduce radioactive gaseous effluents by collecting primary coolant system offgases from the primary system and providing for delay or holdup for the purpose of reducing the total radioactivity prior to release to the environment.

GSC:

GSC stands for General Supervisor Chemistry.

LIQUID RADWASTE PROCESSING SYSTEM:

A **LIQUID RADWASTE PROCESSING SYSTEM** is the system installed and designed to reduce radioactive liquid effluents. The minimum components necessary for reducing liquid radioactive effluents is either 13 or 14 Reactor Coolant Waste Ion Exchange; however, other equipment in the system may be used in the maintenance of ALARA for liquid radioactive effluents.

LOWER LIMIT OF DETECTION:

The LLD is the smallest concentration of radioactive material in a sample that will yield a net count, above system background, that will be detected with 95% probability with only 5% probability of falsely concluding that a blank observation represents a "real" signal.

MEMBERS OF THE PUBLIC:

MEMBERS OF THE PUBLIC shall include all persons who are not occupationally associated with the plant. This category does not include employees of the utility, its contractors, or vendors. Also excluded from this category are persons who enter the site to service equipment or to make deliveries. This category does include persons who use portions of the site for recreational, occupational, or other purposes not associated with the plant.

OFFSITE DOSE CALCULATION MANUAL:

The **OFFSITE DOSE CALCULATION MANUAL** (ODCM) shall contain the methodology and parameters used in the calculation of offsite doses resulting from radioactive gaseous and liquid effluents, in the calculation of gaseous and liquid effluent monitoring alarm and fixed setpoints, and in the conduct of the Environmental Radiological Monitoring Program. The ODCM shall also contain the radioactive effluent controls, radiological environmental monitoring activities, and descriptions of the information that should be included in the Annual Radiological Environmental Operating and Radioactive Effluent Release Reports required by Technical Specification 5.6.2 and 5.6.3.

OPERABILITY:

A system, subsystem, train, component or device shall be operable or have **OPERABILITY** when it is capable of performing its specified function(s). Implicit in this definition shall be the assumption that all necessary attendant instrumentation, controls, normal and emergency electrical power sources, cooling or seal water, lubrication or other required auxiliary equipment that are required for the system, subcomponent or device to perform its function(s) are also capable of performing their related support function(s).

OPERATIONAL MODE:

An OPERATIONAL MODE shall correspond to any one inclusive combination of core reactivity condition, power level and average reactor coolant temperature specified below.

Operational Modes

MODE	REACTIVITY CONDITION, K_{eff}	% RATED THERMAL POWER*	AVERAGE COOLANT TEMPERATURE
POWER OPERATION	≥0.99	>5%	≥300 °F
STARTUP	≥0.99	≤5%	≥300 °F
HOT STANDBY	<0.99	0	≥300 °F
HOT SHUTDOWN	<0.99	0	300 °F > T_{avg} > 200 °F
COLD SHUTDOWN	<0.99	0	≤200 °F
REFUELING**	≤0.95	0	≤140 °F

* Excluding decay heat.
** Reactor vessel head unbolted or removed and fuel in the vessel.

PROCESS CONTROL PROGRAM:

PROCESS CONTROL PROGRAM shall contain the current formula, sampling, analyses, tests, and determinations to be made to ensure that the processing and packaging of solid radioactive wastes based on demonstrated processing of actual or simulated wet solid wastes will be accomplished in such a way as to assure compliance with 10 CFR Part 20, 10 CFR Part 71 and Federal and State and Local regulations governing the disposal of the radioactive waste.

PROJECTED DOSE:

A reasonable estimate of dose expected as a result of future radioactive releases.

PURGE OR PURGING:

PURGE or PURGING is the controlled process of discharging air or gas from a confinement to maintain temperature, humidity, concentration, or other operating condition, in such a manner that replacement air or gas is required to purify the confinement.

RATED THERMAL POWER:

RATED THERMAL POWER shall be a total reactor core heat transfer rate to the reactor coolant of 2700 MWt.

SIMULTANEOUS RELEASES:

Simultaneous liquid releases are discharges of liquid radwaste which occur at the same time.
Simultaneous gaseous releases are discharges of gaseous radwaste which occur at the same time excluding main vent discharges.

SITE BOUNDARY:

The **SITE BOUNDARY** shall be that line beyond which the land is neither owned, nor leased, nor otherwise controlled by the licensee.
(The **SITE BOUNDARY** is depicted on Attachment 18, "Environmental Monitoring Sites")

SOURCE CHECK:

A SOURCE CHECK shall be the qualitative assessment of channel response when the channel sensor is exposed to a source of increased radioactivity.

THERMAL POWER:

The THERMAL POWER shall be the total reactor core heat transfer rate to the reactor coolant.

TYPICAL RADWASTE RELEASES (OR TYPICAL RADWASTE EFFLUENTS):

TYPICAL RADWASTE RELEASES are defined as (1) all releases conducted during any calendar quarter while either Unit 1 or Unit 2 is in mode 1, and also includes (2) all releases conducted during any calendar quarter following mode 1 operation of either Unit 1 or Unit 2.

UNRESTRICTED AREA:

An UNRESTRICTED AREA shall be any area at or beyond the **SITE BOUNDARY** access to which is not controlled by the licensee for purposes of protection of individuals from exposure to radiation and radioactive materials, or any area within the **SITE BOUNDARY** used for residential quarters of/for industrial, commercial, institutional, and/or recreational purposes.

VENTILATION EXHAUST PROCESSING SYSTEM:

A **VENTILATION EXHAUST PROCESSING SYSTEM** is any system designed and installed to reduce gaseous radioiodine or radioactive material in particulate form in effluents by passing ventilation or vent exhaust gases through charcoal adsorbers and/or High Efficiency Particulate Air (HEPA) filters for the purpose of removing iodines or particulates from the gaseous exhaust stream prior to the release to the environment. Such a system is not considered to have any effect on noble gas effluents. Engineered Safety Feature (ESF) atmospheric cleanup systems are not considered to be **VENTILATION EXHAUST TREATMENT SYSTEM** components.

VENTING:

VENTING is the controlled process of discharging air or gas from a confinement to maintain temperature, pressure, humidity, concentration or other operating condition, in such a manner that replacement air or gas is not provided or required during **VENTING**. Vent, used in system names, does not imply a **VENTING** process.

WASTE GAS HOLDUP SYSTEM:

See **GASEOUS RADWASTE PROCESSING SYSTEM**.

REFERENCES

DEVELOPMENTAL REFERENCES

1. NUREG-0133, "Preparation Of Radiological Effluent Technical Specification For Nuclear Power Plants", Boegli, J.S., R. R. Bellamy, W. L. Britz, and R. L. Waterfield, (October 1978).

2. Regulatory Guide 1.109, "Calculation Of Annual Doses To Man From Routine Release Of Reactor Effluents For The Purpose Of Compliance With 10 CFR Part 50, Appendix I," Revision 1, (October 1977).

3. Regulatory Guide 1.111, "Methods For Estimating Atmospheric Transport And Dispersion Of Gaseous Effluents In Routine Releases From Light-Water-Cooled Reactors," Revision 1, (July 1977).

4. CCNPP System Description Number 14B, "Reactor Coolant Waste Processing System Description."

5. Updated Final Safety Analysis Report, Chapter 11, "Waste Processing And Radiation Protection."

6. CCNPP System Description Number 14D, "Miscellaneous Liquid Waste Processing System Description."

7. OI-17D, "Miscellaneous Waste Processing System"

8. OI-17C, "Reactor Coolant Waste Processing System"

9. Title 10 of the Code of Federal Regulations, Part 20, Jan 1990 and May 1991

10. Title 10 of the Code of Federal Regulations, Part 50

11. Calvert Cliffs Nuclear Power Plant Semi-Annual Radiological Effluent Release Report (1986, 1987, 1988).

12. Radioactive Decay Data Tables, David C. Kocher, 1981.

13. Radiological Health Handbook, Bureau of Radiological Health, Jan. 1970.

14. TE-001, "Main Vent Stack Flow Measurement"

15. ETP-87-16, "Main Vent Stack Flow Measurement"

16. Verification And Validation Of The Gaseous Release Permit Portion Of The CCNPP EMS Computer Code, J. S. Bland And Associates, July 10, 1990.

17. Land Use Survey In The Vicinity Of The Calvert Cliffs Nuclear Power Plant September 1991, (for the year 1990), Baltimore Gas And Electric Company, Environmental Programs Section, C. Key, B. E. Helbing

18. CP-607, Revision 1, "Offsite Dose Calculation Manual"

19. NO-1-201, Calvert Cliffs Operating Manual

20. TID-14844, "Calculation of Distance Factors for Power and Test Reactor Sites"

21. "Plant Data Book", BGE CCNPP Units 1 and 2, Bechtel Power Corporation, Volume 1, Job 6750.

22. 50.59 Log No. 82-B-999-028-R00, Safety Analysis No. 2, FCR 82-1053, Supplement 1 (Component Cooling System) **[B527]**

23. 50.59 Log No. 90-0-074-011-R2, Activity MASE 90-7 (Plant Nitrogen System) **[B527]**

24. 50.59 Log No. 90-0-029-045-R1, Activity MASE 90-6 (Plant Heating System) **[B527]**

25. 50.59 Log No. 90-0-037-044-R1, Activity MASE 90-5 (Demineralized Water System) **[B527]**

26. 50.59 Log No. 90-B-012-043-R1, Activity MASE 90-4 (Service Water System) **[B527]**

27. 50.59 Log No. 90-0-027-037-R2, Activity MASE 90-8 (Auxiliary Boiler System) **[B527]**

28. Bechtel Power Corporation, Calculation Number M-90-20, "Allowable Radioactive Contamination Levels in the Plant Heating System" **[B527]**

29. Bechtel Power Corporation, Calculation Number M-90-18, "Allowable Radioactive Contamination Levels in the Nitrogen System Header" **[B527]**

30. Bechtel Power Corporation, Calculation Number M-90-04, "Allowable Radioactive Contamination Levels in Auxiliary Boiler Water" **[B527]**

31. Bechtel Power Corporation, Calculation Number M-90-21, "Allowable Radioactive Contamination Levels in the Demineralized Water System" **[B527]**

32. Bechtel Power Corporation, Calculation Number M-90-19, "Allowable Radioactive Contamination Levels in the Service Water System" **[B527]**

33. Bechtel Power Corporation, Job Number 11865, Calculation Number 7.4.3-15, "Allowable Radioactive Contamination Levels in the Condensate Storage Tank" **[B527]**

34. EN-1-100, Engineering Service Process Overview

35. OI-8A, Blowdown System

36. NUREG-1301, "**OFFSITE DOSE CALCULATION MANUAL**: Standard Radiological Effluent Controls for Pressurized Water Reactors", W. W. Meinke, and T. H. Essig, (Published April 1991).

37. Radiological Environmental Monitoring Program Annual Report for the Calvert Cliffs Nuclear Power Plant Units 1 and 2 January 1 - December 31, 1991", Baltimore Gas And Electric Company, March 1992

38. 50.59 Log No. 90-B-037-120-R2, Activity MASE 90-11 (Condensate Storage Tank) **[B527]**

39. Regulatory Guide 4.13, Performance Testing and Procedural Specifications for Thermoluminescence Dosimetry; Environmental Applications

PERFORMANCE REFERENCES

1. STP-M-462-1 and STP-M-462-2, Main Vent Stack Flow Measurement

2. Technical Specifications

3. Technical Requirements Manual

4. Regulatory Guide 4.13, Performance Testing and Procedural Specifications for Thermoluminescence Dosimetry; Environmental Applications

5. TE-006, Containment Purge Exhaust System HEPA Filter Test

PART 3.0 / 4.0 : CONTROLS AND SURVEILLANCE REQUIREMENTS

CONTROLS

3.0.1 Compliance with the Controls contained in the succeeding controls is required during the **OPERATIONAL MODES** or other conditions specified therein; except that upon failure to meet the Control, the associated **ACTION** requirements shall be met.

3.0.2 Noncompliance with a Control shall exist when the requirements of the Control and associated **ACTION** requirements are not met within the specified time intervals. If the Control is restored prior to expiration of the specified time intervals, completion of the **ACTION** requirements is not required.

3.0.3 When a Control is not met, except as provided in the associated **ACTION** requirements, within one hour **ACTION** shall be initiated to place the unit in a MODE in which the control does not apply by placing it, as applicable, in:

1. At least HOT STANDBY within the next 6 hours,
2. At least HOT SHUTDOWN within the following 6 hours, and
3. At least COLD SHUTDOWN within the subsequent 24 hours.

Where corrective measures are completed that permit operation under the **ACTION** requirements, the **ACTION** may be taken in accordance with the specified time limits as measured from the time of failure to meet the Control. Exceptions to these requirements are stated in the individual controls.

3.0.4 Entry into an **OPERATIONAL MODE** or other specified condition shall not be made unless the conditions of the Control are met without reliance on provisions contained in the **ACTION** requirements. This provision shall not prevent passage through **OPERATIONAL MODES** as required to comply with **ACTION** requirements. Exceptions to these requirements are stated in the individual controls.

3.0.5 When a system, subsystem, train, component or device is determined to be inoperable solely because its emergency power source is inoperable, or solely because its normal power source is inoperable, it may be considered OPERABLE for the purpose of satisfying the requirements of its applicable Control, provided: (1) its corresponding normal or emergency power source is OPERABLE; and (2) all of its redundant system(s), subsystem(s), train(s), component(s) and device(s) are **OPERABLE**, or likewise satisfy the requirements of this specification. Unless both conditions (1) and (2) are satisfied within 2 hours, action shall be initiated to place the unit in a **MODE** in which the applicable Control does not apply by placing it, as applicable in:

1. At least HOT STANDBY within the next 6 hours,
2. At least HOT SHUTDOWN within the following 6 hours, and
3. At least COLD SHUTDOWN within the subsequent 24 hours.

This specification is not applicable in **MODES** 5 or 6.

SURVEILLANCE

4.0.1 Surveillance Requirements shall be applicable during the **OPERATIONAL MODES** or other conditions specified for individual Control unless otherwise stated in an individual Surveillance Requirement.

4.0.2 Each Surveillance Requirement shall be performed within the specified time interval with a maximum allowable extension not to exceed 25 percent of the specified surveillance interval.

4.0.3 Failure to perform a Surveillance Requirement within the allowed surveillance interval, defined by Control 4.0.2, shall constitute noncompliance with the **OPERABILITY** requirements for a Control. The time limits of the **ACTION** requirements are applicable at the time it is identified that a Surveillance Requirement has not been performed. However, this time of applicability may be delayed for up to 24 hours to permit the completion of the surveillance when the allowable outage time limits of the **ACTION** requirements are less than 24 hours. Surveillance Requirements do not have to be performed on inoperable equipment.

4.0.4 Entry into an **OPERATIONAL MODE** or other specified condition shall not be made unless the Surveillance Requirement(s) associated with the Control have been performed within the stated surveillance interval or as otherwise specified. This provision shall not prevent passage through or to **OPERATIONAL MODES** as required to comply with **ACTION** requirements.

MONITORING INSTRUMENTATION

RADIOACTIVE GASEOUS EFFLUENT

CONTROLS

3.3.3.9 The radioactive gaseous effluent monitoring instrumentation channels shown in Table 3.3-12 shall be **OPERABLE** with their alarm or alarm-with-automatic-termination setpoints set to ensure that the limits of Control 3.11.2.1 are not exceeded. The setpoints of these channels shall be determined and adjusted in accordance with the methodology and parameters in the ODCM.

APPLICABILITY: **As shown in Table 3.3-12.**

ACTION:

a. With a radioactive gaseous effluent monitoring instrumentation channel alarm setpoint less conservative than required by the above Control, without delay suspend the release of radioactive gaseous effluents monitored by the affected channel, or declare the channel inoperable, or change the setpoint so it is acceptably conservative.

b. With less than the minimum number of radioactive gaseous effluent monitoring instrumentation channels **OPERABLE**, take the **ACTION** shown in Table 3.3-12. Exert best efforts to return the instruments to **OPERABLE** status within 30 days and, if unsuccessful, explain in the next Annual Radioactive Effluent Release Report why the inoperability was not corrected in a timely manner.

c. The provisions of Controls 3.0.3 and 3.0.4 are not applicable.

SURVEILLANCE REQUIREMENTS

4.3.3.9 Each radioactive gaseous effluent monitoring instrumentation channel shall be demonstrated **OPERABLE** by performance of the **CHANNEL CHECK, SOURCE CHECK, CHANNEL CALIBRATION** and **CHANNEL FUNCTIONAL TEST** operations at the frequencies shown in Table 4.3-11.

TABLE 3.3-12
RADIOACTIVE GASEOUS EFFLUENT MONITORING INSTRUMENTATION

INSTRUMENT	MINIMUM CHANNELS OPERABLE	APPLICABILITY	ACTION
1. WASTE GAS HOLDUP SYSTEM			
a. Noble Gas Activity Monitor - Providing Alarm and Automatic Termination of Release	1	*	35
b. Effluent System Flow Rate Measuring Device	1	*	36
2. MAIN VENT SYSTEM			
a. Noble Gas Activity Monitor	1	*	37
b. Iodine Sampler	1	*	38
c. Particulate Sampler	1	*	38
d. Tritium Sampler	1	*	38

* At all times

TABLE 3.3-12 (Continued)

ACTION STATEMENTS

ACTION 35 - With the number of channels **OPERABLE** less than required by the Minimum Channels **OPERABLE** requirement, the contents of the tank(s) may be released to the environment:

a. Using the main vent monitor as a backup and recording RMS readings every 15 minutes during the release, or

b. Provided that prior to initiating the release, at least two independent samples of the tank's contents are analyzed, and at least two technically qualified members of the Facility Staff independently verify the release rate calculations and two qualified operators verify the discharge valve lineup.

Otherwise, suspend release of radioactive effluents via this pathway.

ACTION 36 - With the number of channels **OPERABLE** less than required by the Minimum Channels **OPERABLE** requirement, effluent releases via this pathway may continue provided the flow rate is estimated at least once per 4 hours.

ACTION 37 - With the number of channels **OPERABLE** less than required by the Minimum Channels **OPERABLE** requirement, effluent releases via this pathway may continue provided either (1) grab samples are taken and analyzed for gross activity at least once per 24 hours, or (2) an equivalent monitor is provided.

ACTION 38 - With the number of channels **OPERABLE** less than required by the Minimum Channels **OPERABLE** requirement, effluent releases via the affected pathway may continue provided samples are continuously collected as required in Table 4.11-2 with auxiliary sampling equipment.

TABLE 4.3-11
RADIOACTIVE GASEOUS EFFLUENT MONITORING INSTRUMENTATION SURVEILLANCE REQUIREMENTS

INSTRUMENT	CHANNEL CHECK	SOURCE CHECK	CHANNEL CALIBRATION	CHANNEL FUNCTIONAL TEST	MODES IN WHICH SURVEILLANCE REQUIRED
1. WASTE GAS HOLDUP SYSTEM					
a. Noble Gas Activity Monitor - Providing Alarm and Automatic Termination of Release	P	P	R(3)	SA(1)	*
b. Effluent System Flow Rate Measuring Device	D(4)	NA	R	NA	*
2. MAIN VENT SYSTEM					
a. Noble Gas Activity Monitor	D	M	R(3)	SA(2)	*
b. Iodine Sampler	W	NA	NA	NA	*
c. Particulate Sampler	W	NA	NA	NA	*
d. Tritium Sampler	W	NA	NA	NA	*

* At all times other than when the line is valued out and locked

TABLE 4.3-11 (Continued)

TABLE NOTATION

(1) The **CHANNEL FUNCTIONAL TEST** shall also demonstrate the automatic isolation of this pathway and/or Control Room alarm annunciation occurs if the appropriate following condition(s) exists:

1. Instrument indicates measured levels above the alarm-with-automatic-termination setpoint.
2. Circuit failure.
3. Instrument indicates a downscale failure.

(2) The **CHANNEL FUNCTIONAL TEST** shall also demonstrate that Control Room alarm annunciation occurs if any of the following conditions exists:

1. Instrument indicates measured levels above the alarm setpoint.
2. Circuit failure.
3. Instrument indicates a downscale failure.

(3) The initial **CHANNEL CALIBRATION** shall be performed using one or more of the reference standards traceable to NIST or using standards that have been obtained from suppliers that participate in measurement assurance activities with NIST. These standards shall permit calibrating the system within its intended range of energy and measurement range. For subsequent **CHANNEL CALIBRATION**, sources that have been related to the initial calibration can be used.

(4) The **CHANNEL CHECK** shall consist of verifying indication of flow during periods of release and shall be made at least once per 24 hours during periods in which effluent releases are made.

RADIOACTIVE LIQUID EFFLUENT

CONTROLS

3.3.3.10 The radioactive liquid effluent monitoring instrumentation channels shown in Table 3.3-13 shall be **OPERABLE** with their alarm or alarm-with-automatic-termination setpoints set to ensure that the limits of Control 3.11.1.1 are not exceeded. The setpoints of these channels shall be determined and adjusted in accordance with the methodology and parameters in the **OFFSITE DOSE CALCULATION MANUAL (ODCM)**.

APPLICABILITY: As shown in Table 3.3-13.

ACTION:

a. With a radioactive liquid effluent monitoring instrumentation channel alarm/trip setpoint less conservative than required by the above Control, without delay suspend the release of radioactive liquid effluents monitored by the affected channel, or declare the channel inoperable, or change the setpoint so it is acceptably conservative.

b. With less than the minimum number of radioactive liquid effluent monitoring instrumentation channels **OPERABLE**, take the **ACTION** shown in Table 3.3-13. Exert best efforts to return the instruments to **OPERABLE** status within 30 days and, if unsuccessful, explain in the next Annual Radioactive Effluent Release Report why the inoperability was not corrected in a timely manner.

c. The provisions of Controls 3.0.3 and 3.0.4 are not applicable.

SURVEILLANCE REQUIREMENTS

4.3.3.10 Each radioactive liquid effluent monitoring instrumentation channel shall be demonstrated **OPERABLE** by performance of the **CHANNEL CHECK, SOURCE CHECK, CHANNEL CALIBRATION** and **CHANNEL FUNCTIONAL TEST** operations at the frequencies shown in Table 4.3-12.

TABLE 3.3-13

RADIOACTIVE LIQUID EFFLUENT MONITORING INSTRUMENTATION

INSTRUMENT	MINIMUM CHANNELS OPERABLE	APPLICABILITY	ACTION
1. GROSS RADIOACTIVITY MONITORS PROVIDING ALARM AND AUTOMATIC TERMINATION OF RELEASE			
a. Liquid Radwaste Effluent Line	1	(1)	28
b. Steam Generator Blowdown Effluent Line	1	(2)	29
2. FLOW RATE MEASUREMENT DEVICES			
a. Liquid Radwaste Effluent Line	1	(1)	30
b. Steam Generator Blowdown Effluent Line	1	(2)	30

Note: (1) At all times.
(2) At all times while process flow is present.

TABLE 3.3-13 (Continued)

ACTION STATEMENTS

ACTION 28 - With the number of channels **OPERABLE** less than required by the Minimum Channels **OPERABLE** requirement, effluent releases may continue provided that prior to initiating a release:

a. At least two independent samples are analyzed in accordance with Control 4.11.1.1.1, and

b. At least two technically qualified members of the Facility Staff independently verify the release rate calculations and two qualified operators verify the discharge valve line up.

ACTION 29 - With the number of channels **OPERABLE** less than required by the Minimum Channels **OPERABLE** requirement, effluent releases via this pathway may continue provided grab samples are analyzed for gross radioactivity (beta or gamma) at the **LOWER LIMIT OF DETECTION** defined in Table 4.11-1:

a. At least once per 12 hours when the specific activity of the secondary coolant is greater than 0.01 microcurie/gram **DOSE EQUIVALENT I-131**.

b. At least once per 48 hours when the specific activity of the secondary coolant is less than or equal to 0.01 microcurie/gram **DOSE EQUIVALENT I-131**.

ACTION 30 - With the number of channels **OPERABLE** less than required by the Minimum Channels **OPERABLE** requirement, effluent releases via this pathway may continue provided the flow rate is estimated at least once per 4 hours during actual releases. Pump performance curves may be used to estimate flow.

TABLE 4.3-12
RADIOACTIVE LIQUID EFFLUENT MONITORING INSTRUMENTATION

INSTRUMENT	CHANNEL CHECK	SOURCE CHECK	CHANNEL CALIBRATION	CHANNEL FUNCTIONAL TEST
1. GROSS RADIOACTIVITY MONITORS PROVIDING ALARM AND AUTOMATIC TERMINATION OF RELEASE				
a. Liquid Radwaste Effluent Line	D	P	R(2)	SA(1)
b. Steam Generator Blowdown Effluent Line	D	P	R(2)	SA(1)
2. FLOW RATE MEASUREMENT DEVICES				
a. Liquid Radwaste Effluent Line	D(3)	NA	R	NA
b. Steam Generator Blowdown Effluent Line	D(3)	NA	R	NA

TABLE 4.3-12 (Continued)

TABLE NOTATION

(1) The **CHANNEL FUNCTIONAL TEST** shall also demonstrate that automatic isolation of this pathway and/or Control Room alarm annunciation occur if the appropriate following condition(s) exists:

1. Instrument indicates measured levels above the alarm or fixed setpoint.
2. Circuit failure.
3. Instrument indicates a downscale failure.

(2) The initial **CHANNEL CALIBRATION** shall be performed using one or more of the reference standards traceable to NIST or using standards that have been obtained from suppliers that participate in measurement assurance activities with NIST. These standards shall permit calibrating the system within its intended range of energy and measurement range. For subsequent **CHANNEL CALIBRATION**, sources that have been related to the initial calibration can be used.

(3) **CHANNEL CHECK** shall consist of verifying indication of flow during periods of release. **CHANNEL CHECK** shall be made at least once per 24 hours during periods in which effluent releases are made.

RADIOACTIVE EFFLUENTS

LIQUID EFFLUENTS:

Concentration

CONTROLS

3.11.1.1 The concentration of radioactive material released in liquid effluents to **UNRESTRICTED AREAS** shall be limited to the concentrations specified in 10 CFR Part 20, Appendix B, Table II, Column 2 for radionuclides other than dissolved or entrained noble gases.

APPLICABILITY: At all times.

ACTION:

a. With the concentration of radioactive material released in liquid effluents to **UNRESTRICTED AREAS** exceeding the above limits, without delay restore the concentration to within the above limits.

b. The provisions of Controls 3.0.3 and 3.0.4 are not applicable.

SURVEILLANCE REQUIREMENTS

4.11.1.1.1 Radioactive liquid wastes shall be sampled and analyzed according to the sampling and analysis program of Table 4.11-1.

4.11.1.1.2 The results of the radioactivity analyses shall be used in accordance with the methodology and parameters in the **ODCM** to assure that the concentrations at the point of release are maintained within the limits of Control 3.11.1.1.

TABLE 4.11-1

RADIOACTIVE LIQUID WASTE SAMPLING AND ANALYSIS PROGRAM

LIQUID RELEASE TYPE	MINIMUM SAMPLING FREQUENCY	ANALYSIS FREQUENCY	TYPE OF ACTIVITY ANALYSIS	LOWER LIMIT OF DETECTION (LLD)[a] (mCi/ml)
A. Batch Waste Releases[b]	P Each Batch	P Each Batch	Principal Gamma Emitters[c]	$5x10^{-7}$
			I-131	$1x10^{-6}$
			Mo-99, Ce-144	$2x10^{-6}$
	P Each Batch	M Composite[d]	H-3	$1x10^{-5}$
			Gross Alpha	$1x10^{-7}$
	P Each Batch	Q Composite[d]	Sr-89, Sr-90	$5x10^{-8}$
B. Turbine Building Sump	M	M	Principal Gamma Emitters[c]	$5x10^{-7}$
			I-131	$1x10^{-6}$
			Mo-99, Ce-144	$2x10^{-6}$

TABLE 4.11-1 (Continued)

TABLE NOTATION

a The LLD is defined, for purposes of these controls, as the smallest concentration of radioactive material in a sample that will yield a net count, above system background, that will be detected with 95% probability with only 5% probability of falsely concluding that a blank observation represents a "real" signal.

For a particular measurement system, which may include radiochemical separation:

$$LLD = \frac{4.66\, s_b}{E \bullet V \bullet 2.22 \times 10^6 \bullet Y \bullet \exp(-\lambda \Delta t)}$$

Where:

LLD is the "a priori" **LOWER LIMIT OF DETECTION** as defined above, as microcuries per unit mass or volume,

s_b is the standard deviation of the background counting rate or of the counting rate of a blank sample as appropriate, as counts per minute,

E is the counting efficiency, as counts per disintegration,

V is the sample size in units of mass or volume,

2.22×10^6 is the number of disintegrations per minute per microcurie,

Y is the fractional radiochemical yield, when applicable,

λ is the radioactive decay constant for the particular radionuclide, and

Δt is the elapsed time between sample collection, or end of the sample collection period, and time of counting.

Typical values of E, V, Y, and Δt should be used in the calculation.

It should be recognized that the LLD is defined as an a priori (before the fact) limit representing the capability of a measurement system and not as an a posteriori (after the fact) limit for a particular measurement.

TABLE 4.11-1 (Continued)

TABLE NOTATION

b Prior to sampling Reactor Coolant Waste and Miscellaneous Waste for analyses, each batch shall be isolated, and then thoroughly mixed to assure representative sampling.

c The principal gamma emitters for which the LLD control applies exclusively are the following radionuclides: Mn-54, Fe-59, Co-58, Co-60, Zn-65, Cs-134, Cs-137 and Ce-141. This list does not mean that only these nuclides are to be considered. Other gamma peaks that are identifiable, together with those of the above nuclides, shall also be analyzed and reported in the Annual Radioactive Effluent Release Report pursuant to Technical Specification 5.6.3.

d A **COMPOSITE SAMPLE** is one in which the quantity of liquid sampled is proportional to the quantity of liquid waste discharged in which the method of sampling employed results in a specimen that is representative of the liquids released.

LIQUID EFFLUENTS:

Dose

CONTROLS

3.11.1.2 The dose or dose commitment to a **MEMBER OF THE PUBLIC** from radioactive materials in liquid effluents released to **UNRESTRICTED AREAS** shall be limited:

a. During any calendar quarter to less than or equal to 3.0 mrems to the total body and to less than or equal to 10 mrems to any organ, and

b. During any calendar year to less than or equal to 6 mrems to the total body and to less than or equal to 20 mrems to any organ.

APPLICABILITY: At all times.

ACTION:

a. With the calculated dose from the release of radioactive materials in liquid effluents exceeding any of the above limits, prepare and submit to the Commission pursuant to 10 CFR 50.4 within 30 days a Special Report that identifies the cause(s) for exceeding the limit(s) and defines the corrective **ACTIONS** that have been taken to reduce the releases and the proposed corrective **ACTIONS** to be taken to assure that subsequent releases will be in compliance with the above limits.

b. The provisions of Controls 3.0.3 and 3.0.4 are not applicable.

SURVEILLANCE REQUIREMENTS

4.11.1.2 Cumulative dose contributions from liquid effluents for the current calendar quarter and the current calendar year shall be determined in accordance with the methodology and parameters in the **ODCM** at least once per 31 days.

LIQUID EFFLUENTS:

Liquid Radwaste Processing System

CONTROLS

3.11.1.3 The **LIQUID RADWASTE PROCESSING SYSTEM** shall be used to reduce the radioactive materials in liquid wastes prior to their discharge when the calculated doses due to the liquid effluent to **UNRESTRICTED AREAS** exceeds 0.36 mrem to the total body or 1.20 mrem to any organ in a 92 day period.

APPLICABILITY: At all times.

ACTION:

a. With radioactive liquid waste being discharged without processing and in excess of the above limits, prepare and submit to the Commission pursuant to 10 CFR 50.4 within 30 days a Special Report that includes the following information:

   1. Explanation of why liquid radwaste was being discharged without processing, identification of any inoperable equipment or subsystems, and the reason for the inoperability,

   2. **ACTION**(s) taken to restore the inoperable equipment to **OPERABLE** status, and

   3. Summary description of **ACTION**(s) taken to prevent a recurrence.

b. The provisions of Controls 3.0.3 and 3.0.4 are not applicable.

SURVEILLANCE REQUIREMENTS

4.11.1.3 Doses over a 92-day period due to liquid releases to **UNRESTRICTED AREAS** shall be calculated at least once per 31 days in accordance with the methodology and parameters in the **ODCM**.

GASEOUS EFFLUENTS:

Dose Rate

CONTROLS

3.11.2.1 The dose rate due to radioactive materials released in gaseous effluents from the site to areas at and beyond the **SITE BOUNDARY** (see figure in UFSAR Chapter 1) shall be limited to the following:

a. For noble gases: Less than or equal to 500 mrems/yr to the total body and less than or equal to 3000 mrems/yr to the skin, and

b. For iodine-131 and for all radionuclides in particulate form with half lives greater than 8 days: Less than or equal to 1500 mrems/yr to any organ.

APPLICABILITY: At all times.

ACTION:

a. With the dose rate(s) exceeding the above limits, without delay restore the release rate to within the above limit(s).

b. The provisions of Controls 3.0.3 and 3.0.4 are not applicable.

SURVEILLANCE REQUIREMENTS

4.11.2.1.1 The dose rate due to noble gases in gaseous effluents shall be determined to be within the above limits in accordance with the methodology and parameters in the **ODCM**.

4.11.2.1.2 The dose rate due to iodine-131 and all radionuclides in particulate form with half lives greater than 8 days in gaseous effluents shall be determined to be within the above limits in accordance with the methodology and parameters in the **ODCM** by obtaining representative samples and performing analyses in accordance with the sampling and analysis program specified in Table 4.11-2.

TABLE 4.11-2

RADIOACTIVE GASEOUS WASTE SAMPLING AND ANALYSIS PROGRAM

GASEOUS RELEASE TYPE	SAMPLING FREQUENCY	MINIMUM ANALYSIS FREQUENCY	TYPE OF ACTIVITY ANALYSIS	LOWER LIMIT OF DETECTION (LLD)[a] (µCi.ml)
A. Waste Gas Storage[f] Tank	P Each Tank Grab Sample	P Each Tank	Principal Gamma Emitters[b] (Gaseous Emissions Only)	1×10^{-4}
B. Containment Purge and Vent	P Each Batch Grab Sample	P Each Batch	Principal Gamma Emitters[b] (Gaseous Emissions Only)	1×10^{-4}
C. Main Vent	M[c] Grab Sample	M[c]	Principal Gamma Emitters[b] (Gaseous Emissions Only)	1×10^{-4}
	Continuous[d]	M	H-3	1×10^{-6}
	Continuous[d]	W Charcoal Sample[e]	I-131	1×10^{-12}
	Continuous[d]	W Particulate Sample[e]	Principal Gamma Emitters[b] (I-131, others)	1×10^{-11}
	Continuous[d]	M Composite Particulate Sample	Gross Alpha	1×10^{-11}
	Continuous[d]	Q Composite Particulate Sample	Sr-89, Sr90	1×10^{-11}
	Continuous[d]	Noble Gas Monitor	Noble Gases Gross Beta or Gamma	1×10^{-6}
D. Incinerated Oil[g]	P Each Batch[h]	P Each Batch[h]	Principal Gamma Emitters	5×10^{-7}

TABLE 4.11-2 (Continued)

TABLE NOTATION

a The LLD is defined, for purposes of these controls, as the smallest concentration of radioactive material in a sample that will yield a net count, above system background, that will be detected with 95% probability with only 5% probability of falsely concluding that a blank observation represents a "real" signal.

For a particular measurement system, which may include radiochemical separation:

$$LLD = \frac{4.66\, s_b}{E \bullet V \bullet 2.22 \times 10^6 \bullet Y \bullet \exp(-\lambda \Delta t)}$$

Where:

LLD is the "a priori" **LOWER LIMIT OF DETECTION** as defined above, as microcuries per unit mass or volume,

S_b is the standard deviation of the background counting rate or of the counting rate of a blank sample as appropriate, as counts per minute,

E is the counting efficiency, as counts per disintegration,

V is the sample size in units of mass or volume,

2.22×10^6 is the number of disintegrations per minute per microcurie,

Y is the fractional radiochemical yield, when applicable,

λ is the radioactive decay constant for the particular radionuclide, and

Δt for plant effluents is the elapsed time between sample collection or end of the sample collection period, and time of counting.

Typical values of E, V, Y, and Δt should be used in the calculation.

It should be recognized that the LLD is defined as an a priori (before the fact) limit representing the capability of a measurement system and not as an a posteriori (after the fact) limit for a particular measurement.

TABLE 4.11-2 (Continued)

TABLE NOTATION

b The principal gamma emitters for which the LLD control applies exclusively are the following radionuclides: Kr-87, Kr-88, Xe-133, Xe-133m, Xe-135, and Xe-138 for gaseous emissions and Mn-54, Fe-59, Co-58, Co-60, Zn-65, Mo-99, Cs-134, Cs-137, Ce-141 and Ce-144 for particulate emissions. This list does not mean that only these nuclides are to be considered. Other gamma peaks that are identifiable, together with those of the above nuclides, shall also be analyzed and reported in the Annual Radioactive Effluent Release Report pursuant to Technical Specification 5.6.3.

c Sampling and analysis shall also be performed following shutdown, **STARTUP**, or a **THERMAL POWER** change exceeding 15 percent of **RATED THERMAL POWER** within one hour unless (1) analysis shows that the **DOSE EQUIVALENT I-131** concentration in the primary coolant has not increased more than a factor of 5, and (2) the noble gas activity monitor shows that effluent activity has not increased by more than a factor of 5.

d The ratio of the sample flow rate to the sampled stream flow rate shall be known for the time period covered by each dose or dose rate calculation made in accordance with Controls 3.11.2.1, 3.11.2.2 and 3.11.2.3.

e Samples shall be changed at least once per 7 days and analyses shall be completed within 48 hours after changing, or after removal from sampler. When sample collection time is less than seven days, the corresponding LLDs may be increased by a proportional factor.

f Collect sample and analyze daily for total Curie content per Technical Requirements Manual 15.11.2.1 when the Reactor Coolant System specific activity of Xe-133 is greater than 150 uCi/ml.

g Incinerated oil may be discharged via points other than the main vent (e.g., Auxiliary Boiler). Releases shall be accounted for based on pre-release grab sample data.

h Samples for incinerated oil releases shall be collected from and representative of filtered oil in liquid form.

GASEOUS EFFLUENTS:

Dose - Noble Gases

CONTROLS

3.11.2.2 The air dose due to noble gases released in gaseous effluents to areas at and beyond the **SITE BOUNDARY** (see figure in UFSAR Chapter 1) shall be limited to the following:

a. During any calendar quarter: Less than or equal to 10 mrads for gamma radiation and less than or equal to 20 mrads for beta radiation and,

b. During any calendar year: Less than or equal to 20 mrads for gamma radiation and less than or equal to 40 mrads for beta radiation.

APPLICABILITY: At all times.

ACTION:

a. With the calculated air dose from radioactive noble gases in gaseous effluents exceeding any of the above limits, prepare and submit to the Commission pursuant to 10 CFR 50.4 within 30 days a Special Report that identifies the cause(s) for exceeding the limit(s) and defines the corrective **ACTIONS** that have been taken to reduce the releases and the proposed corrective **ACTIONS** to be taken to assure that subsequent releases will be in compliance with the above limits.

b. The provisions of Controls 3.0.3 and 3.0.4 are not applicable.

SURVEILLANCE REQUIREMENTS

4.11.2.2 Cumulative dose contributions for the current calendar quarter and current calendar year for noble gases shall be determined in accordance with the methodology and parameters in the **ODCM** at least once per 31 days.

GASEOUS EFFLUENTS:

Dose - Iodine-131 & Radionuclides in Particulate Form

CONTROLS

3.11.2.3 The dose to a **MEMBER OF THE PUBLIC** from iodine-131 and all radionuclides in particulate form with half lives greater than 8 days in gaseous effluents released to areas at and beyond the **SITE BOUNDARY** (see figure in UFSAR Chapter 1) shall be limited to the following:

a. During any calendar quarter: Less than or equal to 15 mrems to any organ and,

b. During any calendar year: Less than or equal to 30 mrems to any organ.

c. Less than 0.1% of the limits of 3.11.2.3(a) and (b) as a result of burning contaminated oil.

APPLICABILITY: At all times.

ACTION:

a. With the calculated dose from the release of iodine-131 and radionuclides in particulate form with half lives greater than 8 days, in gaseous effluents exceeding any of the above limits, prepare and submit to the Commission pursuant to 10 CFR 50.4 within 30 days a Special Report that identifies the cause(s) for exceeding the limit and defines the corrective **ACTIONS** that have been taken to reduce the releases and the proposed corrective **ACTIONS** to be taken to assure that subsequent releases will be in compliance with the above limits.

b. The provisions of Controls 3.0.3 and 3.0.4 are not applicable.

SURVEILLANCE REQUIREMENTS

4.11.2.3 Cumulative dose contributions for the current calendar quarter and the current calendar year for iodine-131 and radionuclides in particulate form with half lives greater than 8 days shall be determined in accordance with the methodology and parameters in the ODCM at least once per 31 days.

GASEOUS EFFLUENTS:

Gaseous Radwaste Processing System

CONTROLS

3.11.2.4 The **GASEOUS RADWASTE PROCESSING SYSTEM** and the **VENTILATION EXHAUST TREATMENT SYSTEM** shall be used to reduce radioactive materials in gaseous waste prior to their discharge when the gaseous effluent air doses due to gaseous effluent releases, to areas at and beyond the **SITE BOUNDARY** (see figure in UFSAR Chapter 1) exceeds 1.20 mrad for gamma radiation and 2.4 mrad for beta radiation in a 92 day period. The **VENTILATION EXHAUST PROCESSING SYSTEM** shall be used to reduce radioactive materials in gaseous waste prior to their discharge when the calculated doses due to gaseous effluent releases, to areas at and beyond the **SITE BOUNDARY** (see figure in UFSAR Chapter 1) exceeds 1.8 mrem to any organ in a 92 day period.

APPLICABILITY: At all times.

ACTION:

a. With gaseous waste being discharged without processing and in excess of the above limits, prepare and submit to the Commission pursuant to 10 CFR 50.4 within 30 days a Special Report that includes the following information:

   1. Explanation of why gaseous radwaste was being discharged without processing, identification of any inoperable equipment or subsystems, and the reason for the inoperability,

   2. **ACTION**(s) taken to restore the inoperable equipment to **OPERABLE** status, and

   3. Summary description of **ACTION**(s) taken to prevent a recurrence.

b. The provisions of Controls 3.0.3 and 3.0.4 are not applicable.

SURVEILLANCE REQUIREMENTS

4.11.2.4 Doses over a 92-day period due to gaseous releases shall be calculated at least once per 31 days in accordance with the methodology and parameters in the **ODCM**.

TOTAL DOSE

CONTROLS

3.11.4 The annual (calendar year) dose or dose commitment to any **MEMBER OF THE PUBLIC** due to releases of radioactivity and to radiation from uranium fuel cycle sources shall be limited to less than or equal to 25 mrems to the total body or any organ, except the thyroid, which shall be limited to less than or equal to 75 mrems.

APPLICABILITY: At all times.

ACTION:

a. With the calculated doses from the release of radioactive materials in liquid or gaseous effluents exceeding twice the limits of Control 3.11.1.2.a, 3.11.1.2.b, 3.11.2.2.a, 3.11.2.2.b, 3.11.2.3.a, or 3.11.2.3.b, calculations shall be made including direct radiation contributions from the reactor units and outside storage tanks to determine whether the above limits of Control 3.11.4 have been exceeded. If such is the case, prepare and submit to the Commission pursuant to 10 CFR 50.4 within 30 days a Special Report that defines the corrective **ACTION** to be taken to reduce subsequent releases to prevent recurrence of exceeding the above limits and includes the schedule for achieving conformance with the above limits. This Special Report, as defined in 10 CFR 20.405c, shall include an analysis that estimates the radiation exposure (dose) to a **MEMBER OF THE PUBLIC** from uranium fuel cycle sources, including all effluent pathways and direct radiation, for the calendar year that includes the release(s) covered by this report. It shall also describe levels of radiation and concentrations of radioactive material involved, and the cause of the exposure levels or concentrations. If the estimated dose(s) exceeds the above limits, and if the release condition resulting in violation of 40 CFR Part 190 has not already been corrected, the Special Report shall include a request for a variance in accordance with the provisions of 40 CFR Part 190. Submittal of the report is considered a timely request, and a variance is granted until staff **ACTION** on the request is complete.

b. The provisions of Controls 3.0.3 and 3.0.4 are not applicable.

SURVEILLANCE REQUIREMENTS

4.11.4.1 Cumulative dose contributions from liquid and gaseous effluents shall be determined in accordance with Controls 4.11.1.2, 4.11.2.2, and 4.11.2.3, and in accordance with the methodology and parameters in the **ODCM**.

4.11.4.2 Cumulative dose contributions from direct radiation from the reactor units and outside storage tanks shall be determined in accordance with the methodology and parameters in the **ODCM**. This requirement is applicable only under conditions set forth in Control 3.11.4.a.

RADIOLOGICAL ENVIRONMENTAL MONITORING

PROGRAM

CONTROLS

3.12.1 The radiological environmental monitoring program shall be conducted as specified in Table 3.12-1.

APPLICABILITY: At all times.

ACTION:

a. With the radiological environmental monitoring program not being conducted as specified in Table 3.12-1, prepare and submit to the Commission, in the Annual Radiological Environmental Operating Report required by Technical Specification 5.6.2, a description of the reasons for not conducting the program as required and the plans for preventing a recurrence.

b. With the level of radioactivity as the result of plant effluents in an environmental sample at a specified location exceeding the reporting levels of Table 3.12-2, prepare and submit to the Commission pursuant to 10 CFR 50.4 within 30 days after receiving the sample analysis a Special Report that identifies the cause(s) for exceeding the limit(s) and defines the corrective **ACTIONS** to be taken to reduce radioactive effluents so that the potential annual dose* to a **MEMBER OF THE PUBLIC** is less than the calendar year limits of Controls 3.11.1.2, 3.11.2.2, and 3.11.2.3. When more than one of the radionuclides in Table 3.12-2 are detected in the sample this report shall be submitted if:

$$\frac{\text{concentration (1)}}{\text{reporting level (1)}} + \frac{\text{concentration (2)}}{\text{reporting level (2)}} + \ldots \geq 1.0$$

When radionuclides other than those in Table 3.12-2 are detected and are the result of plant effluents, this report shall be submitted if the potential annual dose* to a **MEMBER OF THE PUBLIC** is equal to or greater than the calendar year limits of Controls 3.11.1.2, 3.11.2.2 and 3.11.2.3. This report is not required if the measured level of radioactivity was not the result of plant effluents; however, in such an event, the condition shall be reported and described in the Annual Radiological Environmental Operating Report.

---

* The methodology and parameters used to estimate the potential annual dose to a **MEMBER OF THE PUBLIC** shall be indicated in this report.

c. With fresh leafy vegetable samples unavailable from one or more of the sample locations required by Table 3.12-1, identify locations for obtaining replacement samples and add them to the radiological environmental monitoring program within 30 days. The specific locations from which samples were unavailable may then be deleted from the monitoring program. Pursuant to Technical Specification 5.6.2, identify the cause of the unavailability of samples and identify the new location(s) for obtaining the replacement samples in the next Annual Radiological Environmental Operating Report.

d. The provisions of Controls 3.0.3 and 3.0.4 are not applicable.

SURVEILLANCE REQUIREMENTS

4.12.1 The radiological environmental monitoring samples shall be collected pursuant to Table 3.12-1 from the specific locations given in the table and figure(s) in the **ODCM**, and shall be analyzed pursuant to the requirements of Table 3.12-1 and the detection capabilities required by Table 4.12-1.

TABLE 3.12-1

RADIOLOGICAL ENVIRONMENTAL MONITORING PROGRAM

EXPOSURE PATHWAY AND/OR SAMPLE	NUMBER OF REPRESENTATIVE SAMPLES AND SAMPLE LOCATIONS[a]	SAMPLING AND COLLECTION FREQUENCY	TYPE AND FREQUENCY OF ANALYSIS
1. DIRECT RADIATION[b]	23 routine monitoring stations (DR1 - DR23) either with two or more dosimeters or with one instrument for measuring and recording dose rate continuously, placed as follows: an inner ring of stations, one in each meteorological sector in the general area of the **SITE BOUNDARY** (DR1 - DR09);[f] an outer ring of stations, one in each meteorological sector in the 6- to 8-km range from the site (DR10 - DR18); the remaining stations (DR19 - DR23) to be placed in special interest areas such as population centers, nearby residences, schools, and in 1 area to serve as a control station.	At least Quarterly	Gamma dose at least quarterly

TABLE 3.12-1 (Continued)

RADIOLOGICAL ENVIRONMENTAL MONITORING PROGRAM

EXPOSURE PATHWAY AND/OR SAMPLE	NUMBER OF REPRESENTATIVE SAMPLES AND SAMPLE LOCATIONS[a]	SAMPLING AND COLLECTION FREQUENCY	TYPE AND FREQUENCY OF ANALYSIS
2. AIRBORNE Radioiodine and Particulates	Samples from 5 locations (A1-A5): 3 samples (A1-A3) from close to the 3 **SITE BOUNDARY** locations, in different sectors of the highest calculated annual average ground-level D/Q.[f] 1 sample (A4) from the vicinity of a community having the highest calculated annual average ground-level D/Q. 1 sample (A5) from a control location, as for example 15-30 km distant and in the least prevalent wind direction.	Continuous sampler operation with sample collection weekly, or more frequently if required by dust loading.	Radioiodine Canister I-131 analysis weekly. Particulate Sampler: Gross beta radioactivity analysis following filter change;[c] Gamma isotopic analysis[d] of composite (by location) quarterly

TABLE 3.12-1 (Continued)

RADIOLOGICAL ENVIRONMENTAL MONITORING PROGRAM

EXPOSURE PATHWAY AND/OR SAMPLE	NUMBER OF REPRESENTATIVE SAMPLES AND SAMPLE LOCATIONS[a]	SAMPLING AND COLLECTION FREQUENCY	TYPE AND FREQUENCY OF ANALYSIS
3. WATERBORNE			
a. Surface	1 sample at intake area (Wa1) 1 sample at discharge area (Wa2)	**COMPOSITE SAMPLE** over 1-month period[e]	**GAMMA ISOTOPIC ANALYSIS**[d] monthly. Composite for tritium analysis quarterly
b. Sediment from shoreline	1 sample from downstream area with existing or potential recreational value (Wb1)	Semiannually	**GAMMA ISOTOPIC ANALYSIS**[d] semiannually

TABLE 3.12-1 (Continued)

RADIOLOGICAL ENVIRONMENTAL MONITORING PROGRAM

EXPOSURE PATHWAY AND/OR SAMPLE	NUMBER OF REPRESENTATIVE SAMPLES AND SAMPLE LOCATIONS[a]	SAMPLING AND COLLECTION FREQUENCY	TYPE AND FREQUENCY OF ANALYSIS
4. INGESTION			
a. Fish and Invertebrates	3 samples of commercially and/or recreationally important species (2 fish species and 1 invertebrate species) in vicinity of plant discharge area (Ia1-Ia3).	Sample in season, or semiannually if they are not seasonal	**GAMMA ISOTOPIC ANALYSIS**[d] on edible portions
	3 samples of same species in areas not influenced by plant discharge (Ia4-Ia6).		
b. Food Products	Samples of 3 different kinds of broad leaf vegetation grown near the **SITE BOUNDARY** at 2 different locations of highest predicted annual average ground level D/Q (Ib1-Ib6).[f]	Monthly during growing season	Gamma isotopic[d] and I-131 analysis
	1 sample of each of the similar broad leaf vegetation grown 15-30 km distant in the least prevalent wind direction (Ib7-Ib9).	Monthly during growing season	Gamma isotopic[d] and I-131 analysis

TABLE 3.12-1 (Continued)

TABLE NOTATION

a. The code in parenthesis, e.g., DR1, A1, defines generic sample locations in this control that can be used to identify the specific locations in the map(s) and table in the **ODCM**. Specific parameters of distance and direction sector from the central point between the two containment buildings and additional description where pertinent, is provided for each sample location in Table 3.12-1, and in a table and figure(s) in the **ODCM**. Refer to NUREG-0133, "Preparation of Radiological Effluent Technical Specifications for Nuclear Power Plants, October 1978", and to Radiological Assessment Branch Technical Position, Revision 1, November 1979. Deviations are permitted from the required sampling schedule if specimens are unobtainable due to circumstances such as hazardous conditions, seasonal unavailability, and malfunction of automatic sampling equipment. If specimens are unobtainable due to sampling equipment malfunction, effort shall be made to complete corrective **ACTION** prior to the end of the next sampling period. All deviations from the sampling schedule shall be documented in the Annual Radiological Environmental Operating Report pursuant to Technical Specification 5.6.2. It is recognized that, at times, it may not be possible or practicable to continue to obtain samples of the media of choice at the most desired location or time. In these instances suitable alternative media and locations may be chosen for the particular pathway in question and appropriate substitutions made within 30 days in the radiological environmental monitoring program. Pursuant to Technical Specification 5.6.2, identify the cause of the unavailability of samples for that pathway and identify the new location(s) for obtaining samples in the next Annual Radiological Environmental Operating Report and also include in the report a revised figure(s) and table for the **ODCM** reflecting the new location(s).

TABLE 3.12-1 (Continued)

TABLE NOTATION

b. One or more instruments, such as a pressurized ion chamber, for measuring and recording dose rate continuously may be used in place of, or in addition to, integrating dosimeters. For the purposes of this table, a thermoluminescent dosimeter (TLD) is considered to be one phosphor; two or more phosphors in a packet are considered as two or more dosimeters. Film badges shall not be used as dosimeters for measuring direct radiation. The frequency of analysis or readout for TLD Systems will depend upon the characteristics of the specific system used and should be selected to obtain optimum dose information with minimal fading. Due to the geographical limitations, 9 sectors are monitored around the Calvert Cliffs Nuclear Power Plant.

c. Airborne particulate sample filters shall be analyzed for gross beta radioactivity 24 hours or more after sampling to allow for radon and thoron daughter decay. If gross beta activity in air particulate samples is greater than ten times the yearly mean of control samples, **GAMMA ISOTOPIC ANALYSIS** shall be performed on the individual samples.

d. **GAMMA ISOTOPIC ANALYSIS** means the identification and quantification of gamma-emitting radionuclides that may be attributable to the effluents from the facility.

e. A **COMPOSITE SAMPLE** is one in which the quantity (aliquot) of liquid sampled is proportional to the quantity of flowing liquid and in which the method of sampling employed results in a specimen that is representative of the liquid flow. In this program, **COMPOSITE SAMPLE** aliquots shall be collected at time intervals that are very short (e.g., hourly) relative to the compositing period (e.g., monthly) in order to assure obtaining a representative sample.

f. Exception to these locations is in the South Sector where DR7, A1, 1b4, 1b5, and 1b6 are located approximately 0.7 km from the release point. This location is conservative with respect to the site boundary, which is located approximately 2.1 km from the release point.

TABLE 3.12-2

REPORTING LEVELS FOR RADIOACTIVITY CONCENTRATIONS IN ENVIRONMENTAL SAMPLES

REPORTING LEVELS

ANALYSIS	WATER (pCi/l)	AIRBORNE PARTICULATE OR GASES (pCi/M^3)	FISH & INVERTEBRATES (pCi/kg, wet)	MILK (pCi/l)	FOOD PRODUCTS (pCi/kg, wet)
H-3	20,000#				
Mn-54	1,000		30,000		
Fe-59	400		10,000		
Co-58	1,000		30,000		
Co-60	300		10,000		
Zn-65	300		20,000		
Zr-Nb-95	400				
I-131	2	0.9		3	100
Cs-134	30	10	1,000	60	1,000
Cs-137	50	20	2,000	70	2,000
Ba-La-140	200			300	

For drinking water samples. This is a 40 CFR Part 141 value. If no drinking water pathway exists, a value of 30,000 pCi/l may be used.

TABLE 4.12-1

DETECTION CAPABILITIES FOR ENVIRONMENTAL SAMPLE ANALYSIS[a,b]

LOWER LIMIT OF DETECTION (LLD)[c]

ANALYSIS	WATER (pCi/l)	AIRBORNE PARTICULATE OR GASES (pCi/M^3)	FISH & INVERTEBRATES (pCi/kg, wet)	MILK (pCi/l)	FOOD PRODUCTS (pCi/kg, wet)	SEDIMENT (pCi/kg,dry)
Gross Beta	4	0.01				
H-3	2,000[#]					
Mn-54	15		130			
Fe-59	30		260			
Co-58,60	15		130			
Zn-65	30		260			
Zr-Nb-95	15					
I-131	1[d]	0.07		1	60	
Cs-134	15	0.05	130	15	60	150
Cs-137	18	0.06	150	18	80	180
Ba-La-140	15			15		

[#] If no drinking water pathway exists, a value of 3000 pCi/l may be used.

TABLE 4.12-1 (Continued)

TABLE NOTATION

a This list does not mean that only these nuclides are to be considered. Other peaks that are identifiable, together with those of the above nuclides, shall also be analyzed and reported in the Annual Radiological Environmental Operating Report pursuant to Technical Specification 5.6.2.

b Required detection capabilities for thermoluminescent dosimeters used for environmental measurements shall be in accordance with the recommendations of Regulatory Guide 4.13.

c The LLD is defined, for purposes of these controls, as the smallest concentration of radioactive material in a sample that will yield a net count, above system background, that will be detected with 95% probability with only 5% probability of falsely concluding that a blank observation represents a "real" signal.

For a particular measurement system, which may include radiochemical separation:

$$LLD = \frac{4.66\, s_b}{E \bullet V \bullet 2.22 \bullet Y \bullet \exp(-\lambda \Delta t)}$$

Where:

LLD is the "A priori" **LOWER LIMIT OF DETECTION** as defined above, as picocuries per unit mass or volume,

s_b is the standard deviation of the background counting rate or of the counting rate of a blank sample as appropriate, as counts per minute,

E is the counting efficiency, as counts per disintegration,

V is the sample size in units of mass or volume,

2.22 is the number of disintegrations per minute per picocurie,

Y is the fractional radiochemical yield, when applicable,

λ is the radioactive decay constant for the particular radionuclide, and

TABLE 4.12-1 (Continued)

TABLE NOTATION

Δt for environmental samples is the elapsed time between sample collection, or end of the sample collection period, and time of counting.

Typical values of E, V, Y and Δt should be used in the calculation.

It should be recognized that the LLD is defined as an a priori (before the fact) limit representing the capability of a measurement system and not as an a posteriori (after the fact) limit for a particular measurement. Analyses shall be performed in such a manner that the stated LLDs will be achieved under routine conditions. Occasionally background fluctuations, unavoidable small sample sizes, the presence of interfering nuclides, or other uncontrollable circumstances may render these LLDs unachievable. In such cases, the contributing factors shall be identified and described in the Annual Radiological Environmental Operating Report pursuant to Technical Specification 5.6.2.

d LLD for drinking water samples. If no drinking water pathway exists, the LLD of **GAMMA ISOTOPIC ANALYSIS** may be used.

RADIOLOGICAL ENVIRONMENTAL MONITORING:

LAND USE CENSUS

CONTROLS

3.12.2 A land use census shall be conducted and shall identify within a distance of 8 km (5 miles), the location in each of the 9 meteorological sectors of the nearest milk animal, the nearest residence and the nearest garden* of greater than 50 m^2 (500 ft^2) producing broad leaf vegetation. (For elevated releases as defined in Regulatory Guide 1.111, Revision 1, July 1977, the land use census shall also identify within a distance of 5 km (3 miles) the locations in each of the 9 meteorological sectors of all milk animals and all gardens of greater than 50 m^2 producing broad leaf vegetation).

APPLICABILITY: At all times.

ACTION:

a. With a land use census identifying a location(s) that yields a calculated dose or dose commitment greater than the values currently being calculated in Control 4.11.2.3, identify the new location(s) in the next Annual Radiological Environmental Operating Report, pursuant to Technical Specification 5.6.2.

b. With a land use census identifying a location(s) that yields a calculated dose or dose commitment (via the same exposure pathway) 20 percent greater than at a location from which samples are currently being obtained in accordance with Control 3.12.1, add the new location(s) to the radiological environmental monitoring program within 30 days. The sampling location(s), excluding the control station location, having the lowest calculated dose or dose commitment(s), via the same exposure pathway, may be deleted from this monitoring program after October 31 of the year in which this land use census was conducted. Pursuant to Technical Specification 5.6.2, identify the new location(s) in the next Annual Radiological Environmental Operating Report and also include in the report a revised figure(s) and table for the **ODCM** reflecting the new location(s).

c. The provisions of Controls 3.0.3 and 3.0.4 are not applicable.

SURVEILLANCE REQUIREMENTS

4.12.2 The land census shall be conducted during the growing season at least once per 12 months using that information that will provide the best results, such as by a door-to-door survey, aerial survey, or by consulting local agriculture authorities. The results of the land use census shall be included in the Annual Radiological Environmental Operating Report pursuant to Technical Specification 5.6.2.

---

* Broad leaf vegetation sampling of at least three different kinds of vegetation may be performed at the **SITE BOUNDARY** in each of two different direction sectors with the highest predicted D/Qs in lieu of the garden census. Specifications for broad leaf vegetation sampling in Table 3.12-1.4b shall be followed, including analysis of control samples.

RADIOLOGICAL ENVIRONMENTAL MONITORING:

INTERLABORATORY COMPARISON PROGRAM

CONTROLS

3.12.3 Analyses shall be performed on all radioactive materials, supplied as part of an Interlaboratory Comparison Program that has been approved by the Commission, that correspond to samples required by Table 3.12-1.

APPLICABILITY: At all times.

ACTION:

a. With analyses not being performed as required above, report the corrective **ACTIONS** taken to prevent a recurrence to the Commission in the Annual Radiological Environmental Operating Report pursuant to Technical Specification 5.6.2.

b. The provisions of Controls 3.0.3 and 3.0.4 are not applicable.

SURVEILLANCE REQUIREMENTS

4.12.3 The Interlaboratory Comparison Program shall be described in the **ODCM**. A summary of the results obtained as part of the above required Interlaboratory Comparison Program shall be included in the Annual Radiological Environmental Operating Report pursuant to Technical Specification 5.6.2.

PART 5.0 : CALCULATIONAL METHODOLOGIES

RADIOACTIVE LIQUID EFFLUENTS

RELEASE PATHWAYS [B527]

1. Introduction

   a) Radioactive liquid waste generated as a result of operating the Calvert Cliffs Nuclear Power Plant (CCNPP) may be released to the Chesapeake Bay[1].

   b) There are three pathways by which waste water, non-radioactive and radioactive, may be discharged from the site to the bay:

      (1) Outfall 001,

      (2) Outfall 003,

      (3) Outfall 004.

   c) A diagram which shows the location of each outfall is included as Attachment 1.

2. Outfall 001

   a) Water from the Chesapeake Bay is pumped through the condensers and is discharged to the Chesapeake Bay through the circulating water discharge conduits, known as outfall 001.

   b) The liquid radioactive waste is mixed with and diluted by the circulating water prior to exiting the discharge conduit.

   c) The circulating water discharge conduit extends 850 feet into the Chesapeake bay.

   d) The circulating water discharge conduit may accept liquid radioactive waste from various sources. Sources which may contribute radioactive material to the circulating water discharge conduit are tabulated in Attachment 2.

3. Outfalls 003 and 004

   a) There are two other potential pathways for the release of radioactive liquids to the bay. These pathways are designated outfall outfall 003 and outfall 004.

   b) Sources which could potentially contribute radioactive material to each of these outfalls are tabulated in Attachment 2.

   c) Outfall 002 was modified in 2001 to be discharged via outfall 001.

4. Unmonitored release paths not shown on Attachment 3 should be evaluated and added to the ODCM as necessary.

---

[1] The federal controls and administrative limits associated with the release of radioactive materials from CCNPP are discussed elsewhere in this document.

5. Safety evaluations have been conducted for operating the following systems after they have become contaminated:

   a) component cooling water system

      (1) In accordance with applicable safety evaluations (Ref. 22), continued operation of this system is allowed as long as the concentration of radionuclides in the component cooling water system is less than 3,000 MPCs.

   b) plant heating system

      (1) In accordance with applicable safety evaluations (Ref. 24 and Ref. 28), continued operation of this system is allowed as long as the concentration of radionuclides in the plant heating system is less than 0.3 MPCs.

   c) auxiliary boiler system

      (1) In accordance with applicable safety evaluations (Ref. 27 and Ref. 30) continued operation of this system is allowed as long as the concentration of radionuclides in the auxiliary boiler steam drum is less than 96 MPCs.

   d) demineralized water system

      (1) In accordance with applicable safety evaluations (Ref. 25 and Ref. 31), continued operation of this system is allowed as long as the concentration of radionuclides in the demineralized water system is less than 0.3 MPCs.

   e) service water system

      (1) In accordance with applicable safety evaluations (Ref. 26 and Ref. 32), continued operation of this system is allowed as long as the concentration of radionuclides in the service water system is less than 0.1 MPCs.

   f) condensate storage tank

      (1) In accordance with applicable safety evaluations (Ref. 33), continued operation of this system is allowed as long as the concentration of radionuclides in the condensate storage tank is less than 1.0 MPCs.

TYPES OF LIQUID RELEASES

1. Liquid radwaste discharges have been classified as **CONTINUOUS** or **BATCH** as shown on Attachment 2.

PROCESSING EQUIPMENT

1. Simplified Flow Diagram

   a) An overview of the liquid waste processing system, including major equipment and (normal) flow paths, is outlined on Attachment 4.

   b) There is no processing equipment for wastes discharged through outfalls 003 and 004; however, the waste shall be analyzed for radioactivity in accordance with the analysis frequencies contained in approved CHEMISTRY SECTION procedures.

2. Modifications

   a) Licensee initiated major changes to the Liquid Radioactive Waste System shall be reported to the Commission in the Radioactive Effluent Release Report for the period in which the modification to the waste system is completed. The discussion of each change shall contain:

      (1) A description of the equipment, components and processes involved; and

      (2) Documentation of the fact that the change, including the safety analysis, was reviewed and found acceptable by the onsite review function.

      The report shall also include changes to the ODCM, in accordance with Technical Specification 5.6.3.

   b) A "major" change or modification includes, but is not limited, to the removal or permanent bypass of any of the following:

      (1) degassifier

      (2) reactor coolant waste receiver tank

      (3) reactor coolant waste monitor tank

      (4) letdown filter

      (5) reactor coolant waste ion exchanger

      (6) miscellaneous waste ion exchanger

      (7) miscellaneous waste filter

      (8) miscellaneous waste receiver tank

      (9) miscellaneous waste monitor tank

      (10) evaporator

3. Detailed Description

a) A detailed description of the liquid waste processing system is beyond the scope of the ODCM.

b) For more information on the Miscellaneous Liquid Waste Processing System see FSAR and System Description SD-071A, "Miscellaneous Liquid Waste Processing System Description."

c) For more information on the Reactor Coolant Waste Processing System see System Description SD-071B, "Reactor Coolant Waste Processing System Description."

d) For more information see the Updated Final Safety Analysis Report, Chapter 11, "Waste Processing And Radiation Protection."

LIQUID EFFLUENT RADIATION MONITOR ALARM AND FIXED SETPOINTS

1. Liquid Waste Discharge Radiation Monitor (0-RE-2201)

a) General description

(1) number of radiation elements: one

(2) type of radiation element: in-line scintillation detector

(3) output: analog

(4) radiation indicator: 0-RI-2201

(5) units for radiation indicator: counts per minute

(6) supplier: Westinghouse

b) Functions of 0-RE-2201

(1) continuously measure the activity contained in liquid waste discharge line (Control 3.3.3.10)

(2) continuously indicate (via 0-RI-2201) the activity of liquids contained in liquid waste discharge line (Control 3.3.3.10)

(3) alarm (via 0-RI-2201) prior to exceeding 10 CFR 20, Appendix B, Table II, Column 2 limits (per Control 3.11.1.1)

(4) automatically terminate discharges from the liquid waste processing system by closing the discharge isolation valves (MWS-2201-CV, and MWS-2202-CV) whenever the radiation indicator (0-RI-2201) exceeds the fixed setpoint.

c) **OPERABILITY** of 0-RE-2201

(1) This monitor shall be operable (or have **OPERABILITY**) when it is capable of performing its specified function(s)

(2) The functions of 0-RE-2201 are listed in paragraph (b) above.

d) Monitors equivalent to 0-RE-2201

(1) There are no equivalent monitors for 0-RE-2201.

e) Radiological effluent controls for 0-RE-2201

(1) Liquid waste discharges via this pathway may continue if any one of the following two conditions are satisfied (per Control 3.3.3.10).

(a) The liquid waste discharge monitor, 0-RE-2201, is operable and the alarm-with-automatic-termination setpoint for this monitor is set to ensure the concentrations of radioactive materials released in liquid effluents to **UNRESTRICTED AREAS** are less than the concentrations specified in 10 CFR 20, Appendix B, Table II, Column 2, or

(b) two independent samples are analyzed in accordance with Control 4.11.1.1.1; AND at least two technically qualified members of the Facility Staff independently verify the release rate calculations; AND two qualified operators verify the discharge valve line up.

f) Surveillances for 0-RE-2201

(1) Control 4.3.3.10 requires demonstrating the **OPERABILITY** of 0-RE-2201 by satisfying the checks, calibrations, and tests listed below:

(a) **CHANNEL CHECK** within the past 24 hours

(b) **SOURCE CHECK** prior to each release

(c) **CHANNEL CALIBRATION** within the past 18 months

(d) **CHANNEL FUNCTIONAL TEST** within the past 6 six months

g) Setpoints for 0-RI-2201

(1) There are three radiation alarm setpoints associated with, or otherwise related to, the liquid waste discharge monitor.

(a) 0-RI-2201 fixed high radiation alarm and automatic termination setpoint

(b) 0-RI-2201 adjustable plant computer high radiation alarm and manual termination setpoint

(c) 0-RI-2201 low radiation alarm setpoint

(2) In order to simplify the setpoint terminology, eliminate ambiguity, and minimize the possibility of misinterpretation, the ODCM will refer to these setpoints as follows:

(a) The 0-RI-2201 fixed high radiation alarm and automatic termination setpoint will be referred to as the fixed setpoint.

(b) The 0-RI-2201 adjustable plant computer high radiation alarm and manual termination setpoint will be referred to as the adjustable setpoint.

(c) The 0-RI-2201 low radiation alarm setpoint will be referred to as the low setpoint.

(3) Each of these alarm setpoints is described below.

h) Fixed setpoint for 0-RI-2201

(1) General information

(a) This setpoint is not adjusted for each release.

(b) Whenever the fixed setpoint is exceeded, discharges from the liquid waste processing system will be automatically suspended.

(c) The fixed setpoint corresponds to the maximum concentration of radionuclides allowed in liquid waste discharged from the liquid waste processing system.

(d) The current value for the fixed setpoint is specified in the CCNPP Alarm Manual.

(e) The CCNPP Alarm Manual refers to this alarm and fixed setpoint as the 0-RI-2201 Liquid Waste Discharge High Alarm.

(f) The fixed setpoint is integral to the liquid release discharge monitor, as purchased from the supplier.

(g) The fixed setpoint is administratively controlled by EN-1-100.

(h) The fixed setpoint shall be calculated as described below[1].

(2) Calculating the fixed setpoint for 0-RI-2201

(a) The fixed setpoint for 0-RI-2201 shall be calculated as follows:

---

[1] Per Control 3.3.3.10.

FIXED SETPOINT FOR 0-RI-2201

$$S_{fix} \leq K_{sf}\{(F_d / F_u)\Sigma[(A_{ILn})(e_i)] + Bkg\} \quad \text{Eq. 1L}^1$$

S_{fix} = the fixed setpoint for 0-RI-2201 (cpm)

K_{sf} = a constant, actually a safety factor, which is the ratio of the CCNPP activity limit to the 10 CFR 20 MPC limit (unitless)

The safety factor chosen shall be less than or equal to 1.00. This ensures the fixed setpoint is always less than or equal to the limits of 10 CFR 20.

A safety factor of 1.00 will yield a fixed setpoint which corresponds to 1.0 MPC.

A safety factor of 0.500 will yield a fixed setpoint which corresponds to 0.5 MPCs.

It is recommended that a safety factor of 0.5 be used for calculating the fixed setpoint, however, other values--not to exceed 1.00--may be used as directed by the General Supervisor Chemistry.

The use of a "safety margin" is in accordance with the provisions of NUREG-0133, section 4.1.1, which states, "The alarm and trip setpoints ... should correspond to a value(s) which represents a safe margin of assurance that the instantaneous liquid release limit of 10 CFR Part 20 is not exceeded."

This safety margin will prevent minor fluctuations in the nominal circulating water flow rate (and other statistical aberrations) from adversely impacting the calculated fixed setpoint.

F_d = the dilution water flow rate (gpm) prior to the point of release to **UNRESTRICTED AREAS**

The dilution water flow rate is actually the sum of the minimum circulating water flow rate, the minimum salt water flow rate, and the maximum undiluted radwaste flow rate.

The dilution water flow rate shall be calculated in accordance with equation 2L.

---

1 This formula has been derived from NUREG-0133, Addendum, page AA-1.

DILUTION WATER FLOW RATE

$$F_d = F_{cw} + F_{sw} + F_u \qquad \text{Eq. 2L}$$

F_{cw} = the minimum circulating water system flow rate necessary to conduct liquid releases

A minimum of two circulating water pumps (one circulating water pump per conduit accepting radwaste) shall be operable when discharging liquid radwaste -- via this monitor -- to outfall 001.

Additional circulating water pumps may be required as specified in approved Chemistry Procedures.

If a release of liquid radwaste is to be conducted using less than minimum circulating water flow rate necessary to conduct liquid releases, then the release shall not be allowed until a new setpoint has been calculated and entered into 0-RI-2201 (unless the existing setpoint is conservative), or otherwise comply with the **ACTION** requirements of Control 3.3.3.10.

F_{sw} = the minimum salt water system flow rate necessary to release liquid radwaste

If the minimum salt water flow rate available for liquid releases is unknown, difficult to predict, or may decrease during a liquid release, a minimum salt water flow rate of 0 gpm should be used when calculating the fixed setpoint.

If a release of liquid radwaste is to be conducted using less than the minimum salt water flow rate necessary to conduct liquid releases, the release shall not be allowed until a new setpoint has been calculated and entered into 0-RI-2201 (unless the existing setpoint is conservative), or otherwise comply with the **ACTION** requirements of Control 3.3.3.10.

F_u = maximum undiluted radwaste flow rate (gpm)

Values of maximum undiluted radwaste flow rates for various waste streams are tabulated in Attachment 2.

Since the flow rate of undiluted liquid waste (120 gpm maximum) is insignificant relative to the circulating water flow rate (200,000 gpm per circulating water pump), the flow rate of undiluted liquid waste need not be considered when calculating the dilution water flow rate.

Since the maximum undiluted radwaste flow rate is used for calculating the fixed setpoint, a flow setpoint is not required--for the flow measuring device (0-FE-2199) in the effluent line-- to verify compliance with Control 3.3.3.10.

A_{iLn} = specific activity limit for the release of radionuclide, i, to **UNRESTRICTED AREAS** (calculated in accordance with 10 CFR 20, Appendix B, Table II, Note 1 as described below; microcuries per milliliter).

In order to calculate a meaningful and accurate fixed setpoint, the specific radionuclides, i, chosen for calculating the fixed setpoint should correspond to those radionuclides found in **TYPICAL RADWASTE RELEASES** from CCNPP.

Attachment 5 provides further guidance for determining the identity of those radionuclides, i, to be used to calculate a fixed setpoint.

Values for A_{iLn} shall be calculated, as described below, for each radionuclide.

SPECIFIC ACTIVITY LIMIT FOR RADIONUCLIDE i

$$A_{iLn} = (f_i)(A_{TLn}) \quad \text{Eq. 3L}$$

f_i = a fraction which represents the relative activity contribution of nuclide i to the average total effluent activity (unitless)

The average total effluent activity does not include tritium or dissolved and entrained noble gases.

This value may be obtained using the guidance provided on Attachment 5.

A_{TLn} = the sum of the total specific activities of all radionuclides found in a TYPICAL LIQUID RADWASTE RELEASE (microcuries/cm^3)

This value corresponds to 1 MPC.

A_{TLn} shall be calculated as shown below.

TOTAL SPECIFIC ACTIVITY EQUIVALENT TO 1 MPC

$$\Sigma[(f_i)(A_{TLn})/A_{iLt}] = 1 \quad \text{Eq. 4L}^1$$

A_{iLt} = the specific activity limit for radionuclide, i, as obtained from 10 CFR 20, Appendix B, Table II, Column 2 (microcuries/cm^3)

For all the radionuclides found in **TYPICAL RADWASTE EFFLUENTS**, use the value from 10 CFR 20, Appendix B, Table II, Column 2.

1 = the MPC limit (MPCs) for **UNRESTRICTED AREAS**

This value is based on the MPC limit from 10 CFR 20, Table II, Note 1.

e_i = absolute detector efficiency for nuclide, i (cpm/microcuries per milliliter)

The detector efficiency for each radionuclide may be calculated from data collected during calibration of the radiation monitor.

Bkg = an approximation of the detector background prior to initiating the liquid release (cpm)

Instead of using an approximation of the detector background, a value of 0 cpm may be used as the detector background if so desired.

(3) Documenting the fixed setpoint for 0-RI-2201

(a) Whenever the fixed setpoint is calculated, the specific values chosen for each of the parameters shall be documented in accordance with EN-1-100.

(4) Changing the fixed setpoint for 0-RI-2201

---

1 This formula has been derived from 10 CFR 20, Table II, Notes 1, 2, and 3.

(a) If the fixed setpoint calculated in accordance with equation 1L exceeds the maximum range of the monitor, the fixed setpoint shall be adjusted to a value which falls within the normal operating range of the monitor.

(b) The fixed setpoint for 0-RI-2201 may be established at values lower than the maximum allowable setpoint, if desired.

(c) A setpoint change should be initiated whenever any of the parameters identified in equation 1L have changed.

(d) The fixed setpoint should not be changed unless one of the following occurs:

i) the relative activity[1] of any radionuclide in TYPICAL LIQUID EFFLUENTS, f_i, has changed by greater than 10%, and the new radionuclide mixture yields a fixed setpoint which is 10% (or more) lower than the current fixed setpoint,

ii) the minimum dilution water flow rate is not available for a liquid release,

iii) the values listed in 10 CFR 20, Table II, column 2 have changed,

iv) the radiation monitor has been recently calibrated, repaired, or otherwise altered, or

v) the monitor is not conservative in its function (see "Functions of 0-RE-2201" earlier in this section).

(e) EN-1-100 contains the administrative controls associated with changing and approving the fixed setpoint.

---

1 As determined in accordance with Attachment 5.

i) The adjustable setpoint for 0-RI-2201

(1) General information

(a) The adjustable setpoint is calculated and adjusted prior to each release from the liquid waste processing system.

(b) The adjustable setpoint is based on the specific activities of the radionuclides present in the undiluted liquid waste (as determined by radiochemical analysis per Control 4.11.1.1.1).

(c) Whenever the adjustable setpoint is exceeded, discharges from the liquid waste processing system will be manually suspended.

(d) See OI-17C, "Reactor Coolant Waste Processing System", or OI-17D, "Miscellaneous Waste Processing System," for a full list of operator **ACTIONS** taken in response to this alarm.

(e) The adjustable setpoint corresponds to the maximum concentration of radionuclides anticipated or expected in discharges from the liquid waste processing system.

(f) The value for the adjustable setpoint is recorded on the liquid release permit in accordance with CHEMISTRY SECTION procedures.

(g) This alarm is not integral to the liquid release discharge monitor, as purchased from the supplier.

(h) This alarm is generated by the plant computer, which monitors output from 0-RI-2201, and provides an alarm to plant operators when the adjustable setpoint has been exceeded.

(i) A value for the adjustable setpoint shall be calculated prior to each release as shown below.

(2) Calculating the adjustable setpoint for 0-RI-2201

(a) The adjustable setpoint is based on the specific activities of the radionuclides in the undiluted liquid waste (as determined by radiochemical analysis per Control 4.11.1.1.1), and shall be calculated as shown below.

ADJUSTABLE SETPOINT FOR 0-RI-2201

$$S_{adj} \leq 1.50 \left[\Sigma (A_{iu}) (e_i) + Bkg \right] \qquad \text{Eq. 5L}$$

S_{adj} = the adjustable setpoint for 0-RI-2201 (cpm)

1.50 = a constant, actually a safety factor, which allows for fluctuations in radiation monitor response (unitless)

This safety factor helps ensure the release is not unnecessarily terminated due to (1) electronic anomalies which cause spurious monitor responses, (2) statistical fluctuations in disintegration rates, (3) statistical fluctuations in detector efficiencies, (4) errors associated with sample analysis, or (5) errors associated with monitor calibrations.[1]

A_{iu} = specific activity of radionuclide, i, in the undiluted waste stream (microcuries per milliliter)

e_i = absolute detector efficiency for nuclide, i (cpm/microcuries per milliliter)

The detector efficiency for each radionuclide may be calculated from data collected during calibration of the radiation monitor.

Bkg = an approximation of the detector background (cpm)

(3) Documenting the adjustable setpoint for 0-RI-2201

(a) Whenever the adjustable setpoint is calculated, the specific values chosen for each of the variables shall be documented in accordance with approved CHEMISTRY SECTION procedures.

(4) Changing the adjustable setpoint for 0-RI-2201

(a) In all cases, the adjustable setpoint shall be set to a value which is less than or equal to the fixed setpoint.

(b) If the adjustable setpoint exceeds the maximum range of the monitor, the setpoint shall be adjusted to a value which falls within the normal operating range of the monitor.

(c) CHEMISTRY SECTION procedures contain administrative controls associated with calculating and approving an adjustable setpoint.

(d) Whenever 0-RI-2201 is operable, the calculated value for the adjustable setpoint shall be entered into the plant computer prior to each release from the liquid waste processing system.

[1] The "analysis errors" and "calibration errors" refer to errors which are within established quality assurance and quality control limits.

(e) Plant Operating Instructions contain administrative controls associated with entering the adjustable setpoint into the plant computer.

j) The low setpoint for 0-RI-2201

(1) This setpoint is integral to the liquid release discharge monitor, as purchased from the supplier.

(2) The current value for the low setpoint is specified in the CCNPP Alarm Manual.

(3) The low setpoint may be used to determine the **OPERABILITY** of this monitor (per Control 4.3.3.10, **CHANNEL FUNCTIONAL TEST**).

(4) The alarm generated by the low setpoint may be used to terminate a release in the event 0-RE-2201 fails (i.e., downscale failure or circuit failure) in accordance with Control 4.3.3.10.

(5) The low setpoint calculations are not described in the ODCM.

(6) Changes to the low setpoint are controlled by EN-1-100.

2. Steam Generator Blowdown Effluent Radiation Monitors (1/2-RE-4095)

a) General description of 1/2-RE-4095

(1) number of radiation elements: one per unit

(2) Type of radiation elements: in-line scintillation detectors

(3) output: analog

(4) Designations for radiation indicators

(a) 1-RI-4095

(b) 2-RI-4095

(5) units for radiation indicator: counts per minute

(6) supplier: Westinghouse

b) Functions of 1/2-RE-4095

(1) continuously measure the activity contained in steam generator blowdown effluent line (Control 3.3.3.10)

(2) continuously indicate (via 1/2-RI-4095) the activity of liquids contained in the steam generator blowdown effluent line (Control 3.3.3.10)

(3) alarm (via 1/2-RI-4095) prior to exceeding 10 CFR 20, Appendix B, Table II, Column 2 limits (per Control 3.11.1.1).

(4) automatically terminate steam generator blowdown releases to **UNRESTRICTED AREAS** when the radiation indicator (1/2-RI-4095) exceeds the fixed setpoint

c) **OPERABILITY** of 1/2-RE-4095

(1) This monitor shall be operable (or have **OPERABILITY**) when it is capable of performing its specified function(s).

(2) The functions of this monitor are listed in section (b) above.

(3) It should be noted that if the steam generator blowdown processing system heat exchangers are bypassed, it is possible for blowdown flow to bypass 1/2-RE-4095. If blowdown flow is allowed to bypass 1/2-RE-4095, the minimum channels **OPERABILITY** requirement of Control 3.3.3.10 may not be satisfied.

d) Monitors equivalent to 1/2-RE-4095

(1) 1/2-RE-4014 is normally considered the PRIMARY MONITOR for measuring activity released via the steam generator blowdown processing system, and 1/2-RE-4095 is normally considered the BACKUP MONITOR for measuring activity released via the steam generator blowdown processing system.

(2) In the event PRIMARY MONITOR (1/2-RE-4014) is inoperable or otherwise unavailable, the BACKUP MONITOR (1/2-RE-4095) may fulfill the measuring, indicating, and alarming functions normally provided by the PRIMARY MONITOR.

(3) 1/2-RE-4014, Steam Generator Blowdown Tank Radiation Monitor is considered to be "equivalent" monitor to 1/2-RE-4095 as specified below.

(4) 1/2-RE-4014, Steam Generator Blowdown Tank Radiation Monitor, may perform measurement, indication, alarm, and isolation functions (see "Functions of 1/2-RE-4014" earlier in this section) which limit the concentration of radioactive materials released to **UNRESTRICTED AREAS** in accordance with Control 3.11.1.1 as long as the following conditions are satisfied:

(a) the **OPERABILITY** of 1/2-RE-4014 must be demonstrated in accordance with Control 4.3.3.10, Table 3.3-13(1b), and

(b) the blowdown ion exchangers are isolated (or the decontamination factors for all radionuclides are verified to be greater than or equal to one for the duration of the release), and

(c) the specific activities of radionuclides in the blowdown tank radiation monitor are representative of the activities of the radionuclides in the blowdown effluent line.

e) Radiological effluent controls for 1/2-RE-4095

(1) Steam generator blowdown releases via this pathway may continue if any one of the following two conditions are satisfied (per Control 3.3.3.10):

(a) A steam generator blowdown monitor (either 1/2-RE-4095 or 1/2-RE-4014) is **OPERABLE** (see "**OPERABILITY** of 1/2-RE-4095"; and "**OPERABILITY** of 1/2-RE-4014" earlier in this section) AND the setpoint for this monitor is set to ensure the concentrations of radioactive materials released in liquid effluents to **UNRESTRICTED AREAS** are less than the concentrations specified in 10 CFR 20, Appendix B, Table II, Column 2, or

(b) a grab sample is collected AND analyzed in accordance with the provisions described below:

i) analysis shall determine EITHER the gross gamma activity or gross beta activity of the sample

ii) sampling and analysis shall be completed at least once per 12 hours if the specific activity of the steam generator blowdown is greater than 0.01 microcuries per gram IODINE DOSE EQUIVALENT

iii) sampling and analysis shall be completed at least once per 48 hours if the specific activity of the steam generator blowdown is less than or equal to 0.01 microcuries per gram IODINE DOSE EQUIVALENT

iv) the LOWER LIMITS OF DETECTION (LLDs) for the gross gamma and/or gross beta analyses are in accordance with the LLDs of Control 4.11.1.1.1

f) Surveillances for 1/2-RE-4095

(1) Control 4.3.3.10 requires demonstrating the **OPERABILITY** of 1/2-RE-4095 by satisfying the checks, calibrations, and tests listed below

(a) **CHANNEL CHECK** within the past 24 hours

(b) **SOURCE CHECK** prior to each release

(c) **CHANNEL CALIBRATION** within the past 18 months

(d) **CHANNEL FUNCTIONAL TEST** within the past 6 six months

g) Setpoints for 1/2-RI-4095

(1) There are three radiation alarm setpoints associated with the Steam Generator Blowdown Effluent Radiation Monitor.

(a) 1/2-RI-4095 fixed high radiation alarm and automatic termination setpoint

(b) 1/2-RI-4095 adjustable plant computer high radiation alarm and manual termination setpoint

(c) 1/2-RI-4095 low radiation alarm setpoint

(2) In order to simplify the setpoint terminology, eliminate ambiguity, and minimize the possibility of misinterpretation, the ODCM will refer to these setpoints as follows:

(a) The 1/2-RI-4095 fixed high radiation alarm and automatic termination setpoint will be referred to as the fixed setpoint.

(b) The 1/2-RI-4095 adjustable plant computer high radiation alarm and manual termination setpoint will be referred to as the adjustable setpoint.

(c) The 1/2-RI-4095 low radiation alarm setpoint will be referred to as the low setpoint.

(3) Each of these alarm setpoints are described below.

h) The fixed setpoint for 1/2-RI-4095

(1) General information

(a) The fixed setpoint is not adjusted for each release.

(b) Whenever the fixed setpoint is exceeded, discharges from the steam generator blowdown processing system to **UNRESTRICTED AREAS** will be automatically suspended.

(c) The fixed setpoint corresponds to the maximum concentration of radionuclides allowed in liquid waste discharged from the steam generator blowdown processing system.

(d) The current value for the fixed setpoint is specified in the CCNPP Alarm Manual.

(e) The CCNPP Alarm Manual refers to this setpoint as the 1/2-RI-4095 Steam Generator Blowdown Recovery High Alarm.

(f) This setpoint is integral to the steam generator blowdown discharge monitor, as purchased from the manufacturer.

(g) The fixed setpoint is administratively controlled by EN-1-100.

(h) The fixed setpoint shall be calculated as described below[1].

(2) Calculating the fixed setpoint for 1/2-RI-4095

(a) The fixed setpoint for 1/2-RI-4095 shall be calculated in accordance with equation 1L.

FIXED SETPOINT FOR 1/2-RI-4095

$$S_{fix} \leq K_{sf} \{ (F_d/F_u) \Sigma [(A_{iLn}) (e_i)] + Bkg \} \qquad \text{Eq. 1L}^2$$

S_{fix} = the fixed setpoint for 1/2-RI-4095 (cpm)

K_{sf} = a constant, actually a safety factor, which is the ratio of the CCNPP activity limit to the 10 CFR 20 MPC limit (unitless)

The safety factor chosen shall be less than or equal to 1.00. This ensures the fixed setpoint is always less than or equal to the limits of 10 CFR 20.

A safety factor of 1.00 will yield a fixed setpoint which corresponds to 1.0 MPC.

A safety factor of 0.500 will yield a fixed setpoint which corresponds to 0.5 MPCs.

It is recommended that a safety factor of 0.5 be used for calculating the fixed setpoint, however, other values--not to exceed 1.00--may be used as directed by the General Supervisor Chemistry.

The use of a "safety margin" is in accordance with the provisions of NUREG-0133, section 4.1.1, which states, "The alarm and trip setpoints ... should correspond to a value(s) which represents a safe margin of assurance that the instantaneous liquid release limit of 10 CFR Part 20 is not exceeded."

---

1 Per Control 3.3.3.10.

2 Equation 1L has been derived from NUREG-0133, Addendum, page AA-1.

This safety margin will prevent minor fluctuations in the nominal circulating water flow rate (and other statistical aberrations) from adversely impacting the calculated fixed setpoint.

F_d = the dilution water flow rate (gpm) prior to the point of release to **UNRESTRICTED AREAS**

the dilution water flow rate is actually the sum of the minimum circulating water flow rate, the minimum salt water flow rate, and the maximum undiluted radwaste flow rate.

The dilution water flow rate shall be calculated in accordance with equation 2L.

DILUTION WATER FLOW RATE

$$F_d = F_{cw} + F_{sw} + F_u \qquad \text{Eq. 2L}$$

F_{cw} = the minimum circulating water system flow rate necessary to conduct liquid releases

A minimum of two circulating water pumps (one circulating water pump per conduit accepting radwaste) shall be operable when discharging liquid radwaste -- via this monitor -- to outfall 001.

The flow rate of each circulating water pump is 200,000 gallons per minute.

Additional circulating water pumps may be required as specified in approved CHEMISTRY SECTION procedures.

If a release of liquid radwaste from the steam generator blowdown system is to be conducted using less than minimum circulating water flow rate necessary to conduct liquid releases, the release shall not be allowed until a new setpoint has been calculated and entered into 1/2-RI-4095 (unless the existing setpoint is conservative), or otherwise comply with the **ACTION** requirements of Control 3.3.3.10.

F_{sw} = the minimum salt water system flow rate necessary to release liquid radwaste

If the minimum salt water flow rate available for liquid releases is unknown, difficult to predict, or may decrease during a liquid release, a minimum salt water flow rate of 0 gpm should be used when calculating the fixed setpoint.

The maximum flow rate for one salt water pump is listed on Attachment 2.

If a release of liquid radwaste is to be conducted using less than the minimum salt water flow rate necessary to conduct liquid releases, the release shall not be allowed until a new setpoint has been calculated and entered into 1/2-RI-4095 (unless the existing setpoint is conservative), or otherwise comply with the **ACTION** requirements of Control 3.3.3.10.

F_u = maximum undiluted radwaste flow rate (gpm)

Values of maximum undiluted radwaste flow rates for various waste streams are tabulated in Attachment 2.

Since the steam generator blowdown flow rate (225 gpm maximum) is insignificant relative to the circulating water flow rate (200,000 gpm per circulating water pump), the steam generator blowdown flow rate need not be considered when calculating the dilution water flow rate.

Since the maximum undiluted radwaste flow rate is used for calculating the fixed setpoint, a flow setpoint is not required–for the flow measuring device in the effluent line--to verify compliance with Control 3.3.3.10.

A_{iLn} = specific activity limit for the release of radionuclide, i, to **UNRESTRICTED AREAS** (calculated in accordance with 10 CFR 20, Appendix B, Table II, Note 1 as described below; microcuries per milliliter)

In order to calculate a meaningful and accurate fixed setpoint, the specific radionuclides, i, chosen for calculating the fixed setpoint should correspond to those radionuclides found in **TYPICAL RADWASTE RELEASES** from CCNPP.

Attachment 5 provides further guidance for determining which radionuclides, i, should be used to calculate a fixed setpoint.

Values for A_{iLn} shall be calculated, as described below, for each radionuclide.

SPECIFIC ACTIVITY LIMIT FOR EACH RADIONUCLIDE i

$$A_{iLn} = (f_i)(A_{TLn}) \qquad \text{Eq. 3L}$$

f_i = a fraction which represents the relative activity contribution of nuclide i to the average total effluent activity (unitless)

The average total effluent activity does not include tritium or dissolved and entrained noble gases.

This value may be obtained using the guidance provided on Attachment 5.

e_i = absolute detector efficiency for nuclide, i (cpm/microcuries per milliliter)

The detector efficiency for each radionuclide may be calculated from data collected during calibration of the radiation monitor.

A_{TLn} = the sum of the total specific activities of all radionuclides found in a TYPICAL LIQUID RADWASTE RELEASE (microcuries/cm^3)

This value corresponds to 1 MPC.

A_{TLn} shall be calculated as shown below.

TOTAL SPECIFIC ACTIVITY EQUIVALENT TO 1 MPC

$$\Sigma [(f_i) (A_{TLn}) / A_{iLt}] = 1 \qquad \text{Eq. 4L}^1$$

A_{iLt} = the specific activity limit for radionuclide, i, as obtained from 10 CFR 20, Appendix B, Table II, Column 2 (microcuries/cm^3)

For all the radionuclides found in **TYPICAL RADWASTE EFFLUENTS**, use the value from 10 CFR 20, Appendix B, Table II, Column 2.

1 = the MPC limit (MPCs) for **UNRESTRICTED AREAS**

This value is based on the MPC limit from 10 CFR 20, Table II, Note 1.

Bkg = an approximation of the detector background (cpm)

Instead of using an approximation of the detector background, a value of 0 cpm may be used as the detector background if so desired.

---

(3) Documenting the fixed setpoint for 1/2-RI-4095

(a) Whenever the fixed setpoint is calculated, the specific values chosen for each of the variables shall be documented in accordance with EN-1-100.

(4) Changing the fixed setpoint for 1/2-RI-4095

(a) If the fixed setpoint calculated in accordance with equation 1L exceeds the maximum range of the monitor, the fixed setpoint shall be adjusted to a value which falls within the normal operating range of the monitor.

(b) The fixed setpoint may be established at values lower than the maximum allowable setpoint, if desired.

(c) A setpoint change should be initiated whenever any of the parameters identified in equation 1L have changed.

---

1 This formula has been derived from 10 CFR 20, Table II, Notes 1, 2, and 3.

(d) The fixed setpoint should not be changed unless one of the following occurs:

i) the relative activity[1] of any radionuclide in TYPICAL LIQUID EFFLUENTS has changed by greater than 10%, and the new radionuclide mixture yields a fixed setpoint which is 10% (or more) lower than the current fixed setpoint,

ii) the minimum dilution water flow rate is not available for a liquid release,

iii) the values listed in 10 CFR 20, Table II, column 2 have changed,

iv) the radiation monitor has been recently calibrated, repaired, or otherwise altered, or

v) the monitor is not conservative in its function (see "Functions of 1/2-RE-4095" earlier in this section).

(e) EN-1-100 contains the administrative controls associated with changing and approving the fixed setpoint.

i) The adjustable setpoint for 1/2-RI-4095

(1) General information

(a) The adjustable setpoint is calculated and adjusted prior to each release from the steam generator blowdown processing system.

(b) The adjustable setpoint is based on the specific activities of the radionuclides present in the undiluted liquid waste (as determined by radiochemical analysis per Control 4.11.1.1.1).

(c) Whenever the adjustable setpoint is exceeded, discharges from the steam generator blowdown processing system will be manually suspended.

(d) See OI-8A for a full list of operator actions taken in response to this alarm.

(e) The adjustable setpoint corresponds to the maximum concentration of radionuclides anticipated or expected in discharges from the steam generator blowdown processing system.

(f) The value for the adjustable setpoint is recorded on the liquid release permit in accordance with CHEMISTRY SECTION procedures.

(g) This alarm is not integral to the steam generator blowdown effluent monitor, as purchased from the supplier.

(h) This alarm is generated by the plant computer which monitors output from 1/2-RI-4095, and provides an alarm to plant operators when the adjustable setpoint has been exceeded.

(i) A value for the adjustable setpoint shall be calculated prior to each release as shown below.

(2) Calculating the adjustable setpoint for 1/2-RI-4095

(a) The adjustable setpoint is based on the specific activities of radionuclides in the undiluted liquid waste (as determined by radiochemical analysis per Control 4.11.1.1.1), and shall be calculated as shown below.

ADJUSTABLE SETPOINT FOR 1/2-RI-4095

$$S_{adj} \leq 2.50 \left[\Sigma (A_{iu}) (e_i) + Bkg \right] \qquad \text{Eq. 5L}^2$$

Where,

S_{adj} = the adjustable setpoint for 1/2-RI-4095 (cpm)

2.50 = a constant, actually a safety factor, which allows for fluctuation in radiation monitor response (unitless)

This safety factor helps ensure the release is not unnecessarily terminated due to (1) electronic anomalies which cause spurious monitor responses, (2) statistical fluctuations in disintegration rates, (3) statistical fluctuations in detector efficiencies, (4) errors associated with sample analysis, or (5) errors associated with monitor calibrations.[3]

A_{iu} = specific activity of radionuclide, i, in the undiluted waste stream (microcuries per milliliter)

e_i = absolute detector efficiency for nuclide, i (cpm/microcuries per milliliter)

The detector efficiency for each radionuclide may be calculated from data collected during calibration of the radiation monitor.

Bkg = an approximation of the detector background prior to initiating the liquid release (cpm)

(3) Documenting the adjustable setpoint, 1/2-RI-4095

(a) Whenever the adjustable setpoint is calculated, the specific values chosen for each of the variables shall be documented in accordance with approved CHEMISTRY SECTION procedures.

1 As determined in accordance with Attachment 5.
2 This formula may be derived from NUREG-0133, Addendum, page AA-1.
3 The "analysis errors" and "calibration errors" refer to errors which are within established quality assurance and quality control limits.

(4) Changing the adjustable setpoint for 1/2-RI-4095

(a) If the adjustable setpoint exceeds the maximum range of the monitor, the setpoint shall be adjusted to a value which falls within the normal operating range of the monitor.

(b) In all cases, the adjustable setpoint shall be set to a value which is less than or equal to the fixed setpoint.

(c) Chemistry procedures contain administrative controls associated with calculating and approving an adjustable setpoint.

(d) Whenever 1/2-RI-4095 is operable, the calculated value for the adjustable setpoint shall be entered into the plant computer prior to each release from the steam generator blowdown processing system.

(e) Plant Operating Instructions (e.g., OI-8A) contain administrative controls associated with entering the adjustable setpoint in the plant computer.

j) The low setpoint for 1/2-RI-4095

(1) This alarm is integral to the steam generator blowdown effluent monitor, as purchased from the manufacturer.

(2) The current value for the low alarm setpoint is specified in the CCNPP Alarm Manual.

(3) The low alarm setpoint may be used to determine **OPERABILITY** of this monitor (per Control 4.3.3.10, **CHANNEL FUNCTIONAL TEST**).

(4) The low alarm setpoint may be used to terminate a release in the event 1/2-RE-4095 fails (i.e., downscale failure or circuit failure).

(5) Changes to the low alarm setpoint are controlled by EN-1-100.

(6) The ODCM does not address the calculations associated with the low alarm setpoint.

3. Steam Generator Blowdown Tank Radiation Monitors (1/2-RE-4014)

a) General description of 1/2-RE-4014

(1) number of radiation elements: one per unit

(2) Type of radiation element: off-line scintillation detector

(3) output: analog

(4) Designations for radiation indicators

(a) 1-RI-4014

(b) 2-RI-4014

(5) units for radiation indicator: counts per minute

(6) supplier: Westinghouse

(7) A 3 gallon per minute sample is cooled, passed through the detector, and pumped back into the steam generator blowdown tank.

b) Functions of 1/2-RE-4014

(1) continuously measure the activity contained in an off-line sample of the steam generator blowdown tank (Control 3.3.3.10)

(2) continuously indicate (via 1/2-RI-4014) the specific activity in an off-line sample of the steam generator blowdown tank (Control 3.3.3.10)

(3) alarm (via 1/2-RI-4014) prior to exceeding the 10 CFR 20, Appendix B, Table II, Column 2 limits (per Control 3.11.1.1)

(4) automatically terminate steam generator blowdown releases to **UNRESTRICTED AREAS** when the radiation indicator (1/2-RI-4014) exceeds the fixed alarm setpoint.

c) **OPERABILITY** of 1/2-RE-4014

(1) This monitor shall be operable (or have **OPERABILITY**) when it is capable of performing its specified function(s)

(2) The functions of this monitor are listed in section (b) above.

d) Monitors equivalent to 1/2-RE-4014

(1) 1/2-RE-4014 is normally considered the PRIMARY MONITOR for measuring activity released via the steam generator blowdown processing system, and 1/2-RE-4095 is normally considered the BACKUP MONITOR for measuring activity released via the steam generator blowdown processing system.

(2) In the event PRIMARY MONITOR (1/2-RE-4014) is inoperable or otherwise unavailable, the BACKUP MONITOR (1/2-RE-4095) may fulfill the measuring, indicating, and alarming functions normally provided by the PRIMARY MONITOR.

(3) 1/2-RE-4095, Steam Generator Blowdown Effluent Radiation Monitor, performs measurement, indication, alarm, and isolation functions equivalent to 1/2-RE-4014 (see "Function of 1/2-RE-4014" earlier in this section), unless 1/2-RE-4095 is bypassed as described below.

(4) It should be noted that if the steam generator blowdown processing system heat exchangers are bypassed, it is possible for blowdown flow to bypass 1/2-RE-4095 (the steam generator blowdown effluent radiation monitor). If blowdown flow is allowed to bypass 1/2-RE-4095, the minimum channels **OPERABILITY** requirement of Control 3.3.3.10 may not be satisfied (unless 1/2-RE-4014 is operable).

e) Radiological effluent controls for 1/2-RE-4014

(1) Steam generator blowdown releases via this pathway may continue if any one of the following two conditions are satisfied (per Control 3.3.3.10):

(a) A steam generator blowdown monitor (either 1/2-RE-4095 or 1/2-RE-4014) is **OPERABLE** (see "**OPERABILITY** of 1/2-RE-4095"; and "**OPERABILITY** of 1/2-RE-4014" earlier in this section) AND the alarm setpoint for this monitor is set to ensure the concentrations of radioactive materials released in liquid effluents to **UNRESTRICTED AREAS** are less than the concentrations specified in 10 CFR 20, Appendix B, Table II, Column 2, or

(b) a grab sample is collected AND analyzed in accordance with the provisions described below:

i) analysis shall determine EITHER the gross gamma activity or gross beta activity of the sample

ii) sampling and analysis shall be completed at least once per 12 hours if the specific activity of the steam generator blowdown is greater than 0.01 microcuries per gram IODINE DOSE EQUIVALENT

iii) sampling and analysis shall be completed at least once per 48 hours if the specific activity of the steam generator blowdown is less than or equal to 0.01 microcuries per gram IODINE DOSE EQUIVALENT

iv) the LOWER LIMITS OF DETECTION for the gross gamma and/or gross beta analyses are in accordance with the LLDs of Control 4.11.1.1.1

f) Surveillances for 1/2-RE-4014

(1) Control 4.3.3.10 requires demonstrating the **OPERABILITY** of 1/2-RE-4014 by satisfying the checks, calibrations, and tests listed below

(a) **CHANNEL CHECK** within the past 24 hours

(b) **SOURCE CHECK** prior to each release

(c) **CHANNEL CALIBRATION** within the past 18 months

(d) **CHANNEL FUNCTIONAL TEST** within the past 6 six months

g) Setpoints for 1/2-RI-4014

(1) There are three radiation alarm setpoints associated with the Steam Generator Blowdown Tank Radiation Monitor

(a) 1/2-RI-4014 fixed high radiation alarm and automatic termination setpoint

(b) 1/2-RI-4014 adjustable plant computer high radiation alarm and manual termination setpoint

(c) 1/2-RI-4014 low radiation alarm setpoint

(2) In order to simplify the setpoint terminology, eliminate ambiguity, and minimize the possibility of misinterpretation, the ODCM will refer to these setpoints as follows:

(a) The 1/2-RI-4014 fixed high radiation alarm and automatic termination setpoint will be referred to as the fixed setpoint.

(b) The 1/2-RI-4014 adjustable plant computer high radiation alarm and manual termination setpoint will be referred to as the adjustable setpoint.

(c) The 1/2-RI-4014 low radiation alarm setpoint will be referred to as the low setpoint.

(3) Each of these alarms is described below.

h) The fixed setpoint for 1/2-RI-4014

(1) General Information

(a) The fixed setpoint is not adjusted for each release.

(b) Whenever the fixed setpoint is exceeded, discharges from the steam generator blowdown processing system to **UNRESTRICTED AREAS** will be automatically suspended.

(c) The fixed setpoint corresponds to the maximum concentration of radionuclides allowed in liquid waste discharged from the steam generator blowdown processing system.

(d) The current value for the fixed setpoint is specified in the CCNPP Alarm Manual.

(e) The CCNPP Alarm Manual refers to the fixed setpoint as the 1/2-RI-4014 Steam Generator Blowdown High Alarm.

(f) The fixed setpoint is integral to the liquid release discharge monitor, as purchased from the manufacturer.

(g) The fixed setpoint is administratively controlled by EN-1-100.

(h) The fixed setpoint shall be calculated as described below[1].

(2) Calculating the fixed setpoint for 1/2-RI-4014

(a) The fixed setpoint for 1/2-RI-4014 shall be calculated as follows:

---

[1] Per Control 3.3.3.10.

FIXED SETPOINT FOR 1/2-RI-4014

$$S_{fix} \leq K_{sf}\{(F_d / F_u)\Sigma[(A_{ILn})(e_i)] + Bkg\} \qquad \text{Eq. 1L}^{1}$$

Where,

S_{fix} = the fixed setpoint for 1/2-RI-4014 (cpm)

K_{sf} = a constant, actually a safety factor, which is the ratio of the CCNPP activity limit to the 10 CFR 20 MPC limit (unitless)

The safety factor chosen shall be less than or equal to 1.00. This ensures the fixed setpoint is always less than or equal to the limits of 10 CFR 20.

A safety factor of 1.00 will yield a fixed setpoint which corresponds to 1.0 MPC.

A safety factor of 0.500 will yield a fixed setpoint which corresponds to 0.5 MPCs.

It is recommended that a safety factor of 0.5 be used for calculating the fixed setpoint, however, other values--not to exceed 1.00--may be used as directed by the General Supervisor Chemistry.

The use of a "safety margin" is in accordance with the provisions of NUREG-0133, SECTION 4.1.1, which states, "The alarm and trip setpoints ... should correspond to a value(s) which represents a safe margin of assurance that the instantaneous liquid release limit of 10 CFR Part 20 is not exceeded."

This safety margin will prevent minor fluctuations in the nominal circulating water flow rate (and other statistical aberrations) from adversely impacting the calculated fixed setpoint.

F_d = the dilution water flow rate (gpm) prior to the point of release to **UNRESTRICTED AREAS**

The dilution water flow rate is actually the sum of the minimum circulating water flow rate, the minimum salt water flow rate, and the maximum undiluted radwaste flow rate.

The dilution water flow rate shall be calculated in accordance with equation 2L.

---

1 Equation 1L has been derived from NUREG-0133, Addendum, page AA-1.

DILUTION WATER FLOW RATE

$$F_d = F_{cw} + F_{sw} + F_u \qquad \text{Eq. 2L}$$

F_{cw} = the minimum circulating water system flow rate necessary to conduct liquid releases

A minimum of two circulating water pumps (one circulating water pump per conduit accepting radwaste) shall be operable when discharging liquid radwaste -- via this monitor -- to outfall 001.

The flow rate of each circulating water pump is 200,000 gallons per minute.

Additional circulating water pumps may be required as specified in approved CHEMISTRY SECTION procedures.

If a release of liquid radwaste from the steam generator blowdown system is to be conducted using less than minimum circulating water flow rate necessary to conduct liquid releases, the release shall not be allowed until a new setpoint has been calculated and entered into 1/2-RI-4014 (unless the existing setpoint is conservative), or otherwise comply with the **ACTION** requirements of Control 3.3.3.10.

F_{sw} = the minimum salt water system flow rate necessary to release liquid radwaste

If the minimum salt water flow rate available for liquid releases is unknown, difficult to predict, or may decrease during a liquid release, a minimum salt water flow rate of 0 gpm should be used when calculating the fixed setpoint.

The maximum flow rate for one salt water pump is listed on Attachment 2.

If a release of liquid radwaste is to be conducted using less than the minimum salt water flow rate necessary to conduct liquid releases, the release shall not be allowed until a new setpoint has been calculated and entered into 1/2-RI-4014 (unless the existing setpoint is conservative), or otherwise comply with the **ACTION** requirements of Control 3.3.3.10.

F_u = maximum undiluted radwaste flow rate (gpm)

Values of maximum undiluted radwaste flow rates for various waste streams are tabulated in Attachment 2.

Since the steam generator blowdown flow rate (225 gpm maximum) is insignificant relative to the circulating water flow rate (200,000 gpm per circulating water pump), the steam generator blowdown flow rate need not be considered when calculating the dilution water flow rate.

Since the maximum undiluted radwaste flow rate is used for calculating the fixed setpoint, a flow setpoint is not required--for the flow measuring device in the effluent line--to verify compliance with Control 3.3.3.10.

A_{iLn} = specific activity limit for the release of radionuclide, i, to **UNRESTRICTED AREAS** (calculated in accordance with 10 CFR 20, Appendix B, Table II, Note 1 as described below; microcuries per milliliter)

In order to calculate a meaningful and accurate fixed setpoint, the specific radionuclides, i, chosen for calculating the fixed setpoint should correspond to those radionuclides found in **TYPICAL RADWASTE RELEASES** from CCNPP.

Attachment 5 provides further guidance for determining which radionuclides, i, should be used to calculate a fixed setpoint. An acceptable alternative is to assume an isotopic mix which results in a more conservative setpoint.

Values for A_{iLn} shall be calculated, as described below, for each radionuclide.

SPECIFIC ACTIVITY LIMIT FOR RADIONUCLIDE, i

$$A_{iLn} = (f_i)(A_{TLn}) \qquad \text{Eq. 3L}$$

f_i = a fraction which represents the relative activity contribution of nuclide i to the average total effluent activity (unitless)

The average total effluent activity does not include tritium or dissolved and entrained noble gases.

This value may be obtained using the guidance provided on Attachment 5.

A_{TLn} = the sum of the total specific activities of all radionuclides found in a TYPICAL LIQUID RADWASTE RELEASE (microcuries/cm^3)

This value corresponds to 1 MPC.

Calculate the value of A_{TLn} as shown below.

TOTAL SPECIFIC ACTIVITY CORRESPONDING TO 1 MPC AT THE **SITE BOUNDARY**

$$\Sigma[(f_i)(A_{TLn})/A_{iLt}] = 1 \qquad \text{Eq. 4L}^{1}$$

A_{iLt} = the specific activity limit for radionuclide, i, as obtained from 10 CFR 20, Appendix B, Table II, Column 2 (microcuries/cm^3)

For all the radionuclides found in **TYPICAL RADWASTE EFFLUENTS**, use the value from 10 CFR 20, Appendix B, Table II, Column 2.

---

1 This formula has been derived from 10 CFR 20, Table II, Notes 1, 2, and 3.

1 = the MPC limit (MPCs) for **UNRESTRICTED AREAS**

This value is based on the MPC limit from 10 CFR 20, Table II, Note 1.

e_i = absolute detector efficiency for nuclide, i (cpm/microcuries per milliliter)

The detector efficiency for each radionuclide may be calculated from data collected during calibration of the radiation monitor.

Bkg = an approximation of the detector background (cpm)

Instead of using an approximation of the detector background, a value of 0 cpm may be used as the detector background if so desired.

---

(3) Documenting the fixed setpoint for 1/2-RI-4014

(a) Whenever the fixed setpoint is calculated, the specific values chosen for each of the variables shall be documented in accordance with EN-1-100.

(4) Changing the fixed setpoint for 1/2-RI-4014

(a) If the fixed setpoint calculated in accordance with equation 1L exceeds the maximum range of the monitor, the fixed setpoint shall be adjusted to a value which falls within the normal operating range of the monitor.

(b) The fixed setpoint may be established at values lower than the maximum allowable setpoint, if desired.

(c) A setpoint change should be initiated whenever any of the parameters identified in equation 1L (identified in this section of the ODCM) have changed.

(d) The fixed setpoint should not be changed unless one of the following occurs:

i) the relative activity[1] of any radionuclide in TYPICAL LIQUID EFFLUENTS has changed by greater than 10%, and the new radionuclide mixture yields a fixed setpoint which is 10% (or more) lower than the current fixed setpoint,

ii) the minimum dilution water flow rate is not available for a liquid release,

iii) the values listed in 10 CFR 20, Table II, column 2 have changed,

---

[1] As determined in accordance with Attachment 5.

iv) the radiation monitor has been recently calibrated, repaired, or otherwise altered, or

v) the monitor is not conservative in its function (see "Functions of 1/2-RE-4014" earlier in this section).

(e) EN-1-100 contains the administrative controls associated with changing and approving the fixed setpoint.

i) The adjustable setpoint for 1/2-RI-4014

(1) General information

(a) The adjustable setpoint is calculated and adjusted prior to each release from the steam generator blowdown processing system.

(b) The adjustable setpoint is based on the specific activities of the radionuclides present in the undiluted liquid waste (as determined by radiochemical analysis per Control 4.11.1.1.1).

(c) Whenever the adjustable setpoint is exceeded, discharges from the steam generator blowdown processing system will be manually suspended.

(d) See OI-8A for a full list of operator **ACTIONS** taken in response to this alarm.

(e) The adjustable setpoint corresponds to the maximum concentration of radionuclides anticipated or expected in discharges from the steam generator blowdown processing system.

(f) The value for the adjustable setpoint is recorded on the liquid release permit in accordance with CHEMISTRY SECTION procedures.

(g) This alarm is not integral to the steam generator blowdown tank radiation monitor, as purchased from the supplier.

(h) This alarm is generated by the plant computer which monitors output from 1/2-RI-4014, and provides an alarm to plant operators when the 1/2-RI-4014 adjustable setpoint has been exceeded.

(i) A value for the adjustable setpoint shall be calculated prior to each release as shown below.

(2) Calculating the adjustable setpoint for 1/2-RI-4014

(a) The adjustable setpoint is based on the specific activity of the radionuclides in the undiluted liquid waste (as determined by radiochemical analysis per Control 4.11.1.1.1), and is calculated as shown below.

ADJUSTABLE SETPOINT FOR 1/2-RI-4014

$$S_{adj} \leq 2.50 [\Sigma (A_{iu}) (e_i) + Bkg] \qquad \text{Eq. 5L}^1$$

S_{adj} = the adjustable setpoint for 1/2-RI-4014 (cpm)

2.50 = a constant, actually a safety factor, which allows for fluctuation in radiation monitor response (unitless)

This safety factor helps ensure the release is not unnecessarily terminated due to (1) electronic anomalies which cause spurious monitor responses, (2) statistical fluctuations in disintegration rates, (3) statistical fluctuations in detector efficiencies, (4) uncertainties associated with sample analysis, and (5) uncertainties associated with monitor calibrations.[2]

A_{iu} = specific activity of radionuclide, i, in the undiluted waste stream (microcuries per milliliter)

e_i = absolute detector efficiency for nuclide, i (cpm/microcuries per milliliter)

The detector efficiency for each radionuclide may be calculated from data collected during calibration of the radiation monitor.

Bkg = an approximation of the detector background (cpm)

---

(3) Documenting the adjustable setpoint for 1/2-RI-4014

(a) Whenever the adjustable setpoint is calculated, the specific values chosen for each of the variables shall be documented in accordance with approved CHEMISTRY SECTION procedures.

(4) Changing the adjustable setpoint for 1/2-RI-4014

(a) If the adjustable setpoint exceeds the maximum range of the monitor, the setpoint shall be adjusted to a value which falls within the normal operating range of the monitor.

(b) In all cases, the adjustable setpoint shall be set to a value which is less than or equal to the fixed setpoint.

---

1 Equation 5L has been derived from NUREG-0133, Addendum, page AA-1.

2 The "analysis uncertainties" and "calibration uncertainties" refer to uncertainties which are within established quality assurance and quality control limits.

(c) Chemistry procedures contain administrative controls associated with calculating and approving an adjustable setpoint.

(d) Whenever 1/2-RI-4014 is operable, the calculated value for the adjustable setpoint shall be entered into the plant computer prior to each release from the steam generator blowdown and processing system.

(e) Plant Operating Instructions (e.g., OI-8A) contain administrative controls associated with entering the adjustable setpoint in the plant computer.

j) The low alarm setpoint for 1/2-RI-4014

(1) This alarm is integral to the steam generator blowdown tank monitor, as purchased from the manufacturer.

(2) The current value for the low alarm setpoint is specified in the CCNPP Alarm Manual.

(3) Changes to the low alarm setpoint are controlled by EN-1-100.

(4) The ODCM does not address the calculations associated with the low alarm setpoint.

LIMITS ON RADIONUCLIDE CONCENTRATIONS IN LIQUID EFFLUENTS

1. Introduction

a) 10 CFR 20, Appendix B, specifies concentration limits associated with the release of radioactive materials to **UNRESTRICTED AREAS**.

b) Radiological effluent controls have been established to implement the requirements of 10 CFR 20.

c) These radiological effluent controls are described below.

2. Radiological Effluent Controls

a) The concentration of radioactive material released in liquid effluents to **UNRESTRICTED AREAS** shall be limited to the concentrations specified in 10 CFR 20, Appendix B, Table II, Column 2 for radionuclides other than dissolved or entrained noble gases (per Control 3.11.1.1).

b) It should be noted that NUREG-0133 specifies that the concentration of radioactive materials in liquid effluents to **UNRESTRICTED AREAS** shall be limited to 2 E-4 microcuries per milliliter for dissolved or entrained noble gases, this control has not been incorporated into the CCNPP Technical Specifications, and as a result, the ODCM does not include calculations for same.

c) The routine surveillances which are performed to verify compliance with these radiological effluent controls are described below.

3. Surveillance Requirements

a) Routine surveillances for **BATCH RELEASES**

(1) Sample each "BATCH" of radioactive liquid waste prior to its release (per Control 4.11.1.1.1).

(2) Determine the concentrations of principle gamma emitters (including, but not limited to, Mn-54, Fe-59, Co-58, Co-60, Zn-65, Cs-134, Cs-137, Ce-141, I-131, Mo-99, and Ce-144) in the "BATCH" sample, prior to the "BATCH" release (per Control 4.11.1.1.1).

(3) Determine the concentration of tritium contained in a monthly **COMPOSITE SAMPLE** at least once per month (per Control 4.11.1.1.1).

(4) Determine the concentrations of Sr-89 and Sr-90 contained in a quarterly **COMPOSITE SAMPLE** at least once per quarter (per Control 4.11.1.1.1).

(5) Calculate the concentrations of radionuclides in the receiving waters at the point the liquid radioactive waste is released to **UNRESTRICTED AREAS** (per Control 4.11.1.1.2).

b) Routine surveillances for **CONTINUOUS RELEASES**

(1) Sample **CONTINUOUS RELEASES** of radioactive liquid waste at least once per month (per Control 4.11.1.1.1).

(2) Determine the concentrations of principle gamma emitters (including, but not limited to, Mn-54, Fe-59, Co-58, Co-60, Zn-65, Cs-134, Cs-137, Ce-141, I-131, Mo-99, and Ce-144) in the undiluted, CONTINUOUS waste stream sample (per Control 4.11.1.1.1).

(3) Calculate the concentrations of radionuclides in the receiving waters at the point the liquid radioactive waste is released to **UNRESTRICTED AREAS** (per Control 4.11.1.1.2).

4. Responsible Plant Organizations

   a) The CHEMISTRY SECTION is responsible for performing the sampling, analysis, and calculations required by the above surveillances.

   b) The conditions which initiate the required surveillances are contained in the following section.

5. Initiating Conditions

   a) The surveillances for **BATCH RELEASES** shall be performed prior to each **BATCH RELEASE**[1] and may be performed more often as specified in approved CHEMISTRY SECTION procedures.

   b) The surveillances for **CONTINUOUS RELEASES** shall be performed at least monthly[2] (until the **CONTINUOUS RELEASE** has been terminated) and, if activity is identified[3] in the CONTINUOUS waste stream, the surveillances may be performed more often as specified in approved CHEMISTRY SECTION procedures.

6. Calculation Methodology

   a) At CCNPP, there are two methodologies for calculating the concentrations of radionuclides in the receiving waters, at the point of release to **UNRESTRICTED AREAS**, resulting from the discharge of liquid waste.

      (1) The rigorous method shall be used IF a computer system and the appropriate software are available.

      (2) The simplified method may be used IF a computer system and the appropriate software are NOT available.

      (3) These methods, as well as additional supporting information, are presented in the following sections.

   b) Rigorous method

      (1) Solution of the following equation may prove too rigorous for routine use unless a computer system and appropriate software are available.

      (2) If a computer system and the appropriate software are available, ensure the concentrations of radionuclides in **UNRESTRICTED AREAS** are less than one MPC by verifying the following inequality is true:

---

1 Per Control 4.11.1.1.1.
2 Per Control 4.11.1.1.1.
3 The LOWER LIMITS OF DETECTION shall conform to Control 4.11.1.1.1, Table 4.11-1.

LIMIT ON CONCENTRATIONS OF RADIONUCLIDES IN **UNRESTRICTED AREAS** (RIGOROUS METHOD)

$$(F_u / F_d) \Sigma (A_{iu} / A_{iLt}) \leq 1 \qquad \text{Eq. 6L}^1$$

F_d = the actual dilution water flow rate (gpm) prior to the point of release to **UNRESTRICTED AREAS**

The actual dilution water flow rate is the sum of the circulating water flow rate, the salt water flow rate, and the undiluted radwaste flow rate.

The dilution water flow rate shall be calculated in accordance with equation 2L.

DILUTION WATER FLOW RATE

$$F_d = F_{cw} + F_{sw} + F_u \qquad \text{Eq. 2L}$$

F_{cw} = the actual circulating water system flow rate

The flow rate of each circulating water pump is 200,000 gallons per minute.

F_{sw} = the salt water system flow rate

If the actual salt water flow rate is unknown or otherwise not readily available, a salt water flow rate of 0 gpm may be used in equation 2L.

The maximum flow rate for one salt water pump is listed on Attachment 2.

F_u = actual undiluted radwaste flow rate (gpm)

If the actual undiluted radwaste flow rate is less than 1% of the total dilution water flow rate, an undiluted radwaste flow rate of 0 gpm may be used in equation 2L.

Values of maximum undiluted radwaste flow rates for various waste streams are tabulated in Attachment 2.

A_{iLt} = the specific activity limit for radionuclide, i, as obtained from 10 CFR 20, Appendix B, Table II, Column 2 (microcuries/cm^3)

A_{iu} = the specific activity of nuclide, i, in the undiluted liquid radwaste (microcuries per milliliter)

1 = the MPC limit (MPCs) for **UNRESTRICTED AREAS**

This value is based on the MPC limit from 10 CFR 20, Table II, Note 1.

---

c) Simplified method

---

[1] Equation 6L has been derived from 10 CFR 20, Appendix B, Table II, Note 1.

(1) Whenever a computer system and appropriate software are unavailable to perform the rigorous calculations described in the previous section, ensure the concentrations of radionuclides in **UNRESTRICTED AREAS** are less than one MPC by verifying the following inequality is true.

LIMIT ON CONCENTRATIONS OF RADIONUCLIDES IN **UNRESTRICTED AREAS** (SIMPLIFIED METHOD)

$$\{ F_u / [(F_d) (A_{I131Lt}) (K_{sf})] \} \Sigma A_{iu} \leq 1 \qquad \text{Eq. 7L}^{1}$$

F_u = actual undiluted radwaste flow rate (gpm)

If the actual undiluted radwaste flow rate is less than 1% of the total dilution water flow rate, an undiluted radwaste flow rate of 0 gpm may be used in equation 2L.

Values of maximum undiluted radwaste flow rates for various waste streams are tabulated in Attachment 2.

F_d = the actual dilution water flow rate (gpm) prior to the point of release to **UNRESTRICTED AREAS**

The actual dilution water flow rate is the sum of the circulating water flow rate, the salt water flow rate, and the undiluted radwaste flow rate.

DILUTION WATER FLOW RATE

$$F_d = F_{cw} + F_{sw} + F_u \qquad \text{Eq. 2L}$$

F_{cw} = the actual circulating water system flow rate

The flow rate of each circulating water pump is 200,000 gallons per minute.

F_{sw} = the actual salt water system flow rate

If the actual salt water flow rate is unknown or otherwise not readily available a salt water flow rate of 0 gpm may be used in equation 2L.

The maximum flow rate for one salt water pump is listed on Attachment 2.

A_{I131Lt} = the specific activity limit for I-131 corresponding to the limiting concentration specified in 10 CFR 20, Appendix B, Table II, Column 2

This value is 3E-7 microcuries per milliliter.

A_{iu} = the specific activity of nuclide, i, in the undiluted liquid radwaste (microcuries per milliliter)

K_{sf} = a constant, actually a safety factor, which is the ratio of the CCNPP activity limit to the activity limit of 10 CFR 20, Appendix B, Table II, Column 2, (unitless) (per Control 3.11.1.1)

The safety factor chosen shall be less than or equal to 1.00. This ensures the activity is always less than or equal to the activity limit of 10 CFR 20, Appendix B, Table II, Column 2.

---

[1] This equation has been derived from 10 CFR 20, Appendix B, Table II, Note 1.

A safety factor of 1.00 will yield a activity which corresponds to the 10 CFR 20, Appendix B, Table II, Column 2 activity limit.

A safety factor of 0.500 will yield an activity which corresponds to one-half the activity limit of 10 CFR 20, Appendix B, Table II, Column 2.

It is recommended that a safety factor of 1.0 be used for calculating the activity, however, other values--not to exceed 1.00--may be used as directed by the General Supervisor Chemistry.

The particular value selected for the safety factor is somewhat arbitrary, however a safety factor does provide plant personnel with a degree of administrative control over the use of simplified equations for generating radioactive liquid release permits. This administrative control is designed to minimize the possibility of violating 10 CFR 20, Appendix B, Table II, Column 2 limits whenever simplifying assumptions are used.

The use of a safety factor is consistent with the ALARA philosophy that licensees should make every reasonable effort to maintain radiation exposures, and releases of radioactive materials in effluents to **UNRESTRICTED AREAS**, as low as is reasonably achievable.

This safety factor has been included in equation 7L to account for any potential nonconservatism associated with applying the I-131 MPC limit to all radionuclides identified in the liquid release. Such nonconservatism could conceivable be present whenever radionuclides which have an MPC value higher than the I-131 MPC limit are present in a liquid release.

---

d) Once the rigorous or simplified calculations have been completed, the calculation results are compared to the applicable limits and corrective **ACTIONS** are initiated as described below.

7. Corrective **ACTIONS**

a) CHEMISTRY SECTION surveillance procedures shall contain and/or reference administrative and/or Technical Specification limits for concentration of radionuclides in liquid effluents and shall specify corrective **ACTIONS** to be initiated when these limits are exceeded.

b) Refer to Control 3.11.1.1 for **ACTIONS** to be taken in the event the concentrations of radionuclides in **UNRESTRICTED AREAS** exceed one MPC.

LIMITS ON CUMULATIVE TOTAL BODY DOSES AND CUMULATIVE ORGAN DOSES FOR LIQUID EFFLUENTS

1. Introduction

   a) Appendix I to 10 CFR 50 specifies total body dose limits and organ dose limits associated with the release of radioactive liquids to **UNRESTRICTED AREAS**.

   b) Radiological effluent controls have been established to implement the requirements of 10 CFR 50, Appendix I.

   c) These radiological effluent controls are described below.

2. Radiological Effluent Controls

   a) The total body dose to **MEMBERS OF THE PUBLIC**, from liquid waste discharged to **UNRESTRICTED AREAS**, shall be less than 3 mrems per calendar quarter and 6 mrems per calendar year (Control 3.11.1.2).

   b) The organ doses to **MEMBERS OF THE PUBLIC**, from liquid waste discharged to **UNRESTRICTED AREAS**, shall be less than 10 mrems per calendar quarter and 20 mrems per calendar year (Control 3.11.1.2).

   c) The routine surveillances which are performed to verify compliance with these radiological effluent controls are described below.

3. Surveillance Requirement(s)

   a) Cumulative total body doses to **MEMBERS OF THE PUBLIC** in **UNRESTRICTED AREAS**--for the current calendar month, the calendar quarter, the current calendar year, and the previous 92 days--shall be calculated, in accordance with equation 8L, at least once per 31 days (per Control 4.11.1.2 and 4.11.1.3).

   b) Cumulative organ doses to **MEMBERS OF THE PUBLIC** in **UNRESTRICTED AREAS**--for the current calendar month, the current calendar quarter, the current calendar year, and the previous 92 days--shall be calculated, in accordance with equation 8L, at least once per 31 days (per Control 4.11.1.2 and 4.11.1.3).

4. Responsible Plant Organizations

   a) The CHEMISTRY SECTION is responsible for performing the surveillances, listed above, whenever the appropriate initiating conditions, listed below, are present.

5. Initiating Conditions

a) Perform the surveillances, listed above, at least once per 31 days (per Control 4.11.1.2).

b) For **BATCH RELEASES**, perform the surveillances, listed above, prior to each **BATCH RELEASE** of radioactive liquid waste in accordance with approved CHEMISTRY SECTION procedures.

c) For **CONTINUOUS RELEASES**, perform the surveillances, listed above, at least monthly (until the **CONTINUOUS RELEASE** has been terminated) and, if activity is identified[1] in the CONTINUOUS waste stream, the surveillances may be performed more often as specified in approved CHEMISTRY SECTION procedures.

d) Whenever the correct initiating conditions are present, the calculations required by the above mentioned surveillance(s) shall be completed in accordance with the methodology listed in the next section.

6. Calculation Methodology

a) The cumulative total body dose and the cumulative organ doses (for the current calendar month, current calendar quarter, previous 92 days, and current calendar year) shall be calculated as follows:

CUMULATIVE TOTAL BODY OR ORGAN, o, DOSE FROM LIQUID RELEASES, r

$$D_{ToL} = \Sigma D_{or} \qquad \text{Eq. 8L}$$

D_{ToL} = the sum total of the total body or organ, o, dose for all liquid releases discharged during the applicable time interval

D_{or} = the organ or total body dose resulting from release, r

Calculate the values of D_{or} for each liquid release as described below.

b) At CCNPP, two methods exist for calculating D_{or} (i.e., the total body and organ doses resulting from any single release of radioactive liquid to an **UNRESTRICTED AREA**).

(1) The rigorous method shall be used IF a computer system and the appropriate software are available.

(2) The simplified method may be used IF a computer system and the appropriate software are NOT available.

(3) These methods, as well as additional supporting information, are presented in the following sections.

[1] The LOWER LIMITS OF DETECTION shall conform to Control 4.11.1.1.1, Table 4.11-1.

c) Rigorous method

(1) Solution of the following equation may prove too rigorous for routine use unless a computer system and appropriate software are available.

(2) If a computer system and the appropriate software are available, the dose commitments due to each release of radioactive liquid to an **UNRESTRICTED AREA** shall be calculated in accordance with the following equation:

DOSE TO THE TOTAL BODY OR ORGAN, o, FROM A LIQUID RELEASE (RIGOROUS EQUATION)

$$D_o = \{ V_u / [(60)(F_d)] \} \Sigma \{ (A_{iu}) (C_{io}) \} \qquad \text{Eq. 9L}^1$$

Where,

F_d = actual dilution water flow rate (gpm) prior to the point of release to **UNRESTRICTED AREAS**

The actual dilution water flow rate is the sum of the circulating water flow rate, the salt water flow rate, and the undiluted radwaste flow rate.

The dilution water flow rate shall be calculated in accordance with equation 2L.

DILUTION WATER FLOW RATE

$$F_d = F_{cw} + F_{sw} + F_u \qquad \text{Eq. 2L}$$

F_{cw} = actual circulating water system flow rate

The flow rate of each circulating water pump is 200,000 gallons per minute.

F_{sw} = actual salt water system flow rate

If the actual salt water flow rate is unknown or otherwise not readily available a salt water flow rate of 0 gpm may be used in equation 2L.

The maximum flow rate for one salt water pump is listed on Attachment 2.

F_u = actual undiluted radwaste flow rate (gpm)

If the actual undiluted radwaste flow rate is less than 1% of the total dilution water flow rate, an undiluted radwaste flow rate of 0 gpm may be used in equation 2L.

Values of maximum undiluted radwaste flow rates for various waste streams are tabulated in Attachment 2.

V_u = volume of undiluted radwaste (gallons)

---

1 Equation 9L has been derived from NUREG-0133, 4.3.

A_{iu} = specific activity of nuclide, i, in the undiluted liquid radwaste (microcuries per milliliter)

C_{io} = liquid release dose factor for nuclide, i, and organ, o (mrem/hr per microcurie/ml)

The liquid release dose factors for principal gamma and beta emitters are listed in Attachment 6.

The liquid release dose factors for principal gamma and beta emitters were obtained in accordance with the methodology of NUREG-0133, section 4.3.1 (for salt water sites).

60 = a constant, the number of minutes per hour

(3) In the event a computer system is unavailable, a simplified equation may be used to calculate the total body and organ dose commitments due to individual liquid releases.

(4) The simplified method is presented below.

d) Simplified methods

(1) Whenever a computer system is unavailable to perform the rigorous total body dose calculations described in the previous section, the total body dose commitments--due to each release of radioactive liquid to an **UNRESTRICTED AREA**--may be calculated in accordance with equation 10L.

(2) Whenever a computer system is unavailable to perform the rigorous organ dose calculations described in the previous section, the dose commitments--to the maximum exposed organ, due to each release of radioactive liquid to an **UNRESTRICTED AREA**--may be calculated in accordance with equation 11L.

TOTAL BODY DOSE FROM A LIQUID RELEASE (SIMPLIFIED EQUATION)

$$D_{tb} = \{ [(58.6)(V_u)]/[(K_{sr})(F_d)]\} \Sigma A_{iu} \qquad \text{Eq. 10L}^{1}$$

D_{tb} = dose commitment, to the total body, due to each release of radioactive liquid to an **UNRESTRICTED AREA**

58.6 = a conversion constant which includes:

1) 1.33E4 mrem/hr per microcurie/ml (the total body dose factor for Cs-134)

2) 1.000 hr/60.00 min

3) 1.000 gallons/3.785 liters

V_u = volume of undiluted radwaste (liters)

[1] Equations 10L has been derived from NUREG-0133, 4.3.

K_{sf} = a constant, actually a safety factor, which is the ratio of the CCNPP total body dose limit to the total body dose limit of Control 3.11.1.2, (unitless)

The safety factor chosen shall be less than or equal to 1.00. This ensures the total body dose is always less than or equal to the total body dose limit of Control 3.11.1.2.

A safety factor of 1.00 will yield a total body dose which corresponds to the total body dose limit of Control 3.11.1.2.

A safety factor of 0.500 will yield an total body dose which corresponds to one-half the total body dose limit of Control 3.11.1.2.

It is recommended that a safety factor of 1.0 be used for calculating the total body dose, however, other values--not to exceed 1.00--may be used as directed by the General Supervisor Chemistry.

The particular value selected for the safety factor is somewhat arbitrary, however a safety factor does provide plant personnel with a degree of administrative control over the use of simplified equations for generating radioactive liquid release permits. This administrative control is designed to minimize the possibility of violating Control 3.11.1.2 when simplifying assumptions are used.

The use of a safety factor is consistent with the ALARA philosophy that licensees should make every reasonable effort to maintain radiation exposures, and releases of radioactive materials in effluents to **UNRESTRICTED AREAS**, as low as is reasonably achievable.

This safety factor has been included in equation 10L to account for any potential nonconservatism associated with applying the Cs-134 total body dose conversion factor to all radionuclides identified in the liquid release. Such nonconservatism could conceivable be present whenever radionuclides having a dose conversion factor greater than that of Cs-134 are present in a liquid release.

F_d = actual dilution water flow rate (gpm) prior to the point of release to **UNRESTRICTED AREAS**

The actual dilution water flow rate is the sum of the circulating water flow rate, the salt water flow rate, and the undiluted radwaste flow rate.

The dilution water flow rate shall be calculated in accordance with equation 2L.

DILUTION WATER FLOW RATE

$$F_d = F_{cw} + F_{sw} + F_u \qquad \text{Eq. 2L}$$

F_{cw} = actual circulating water system flow rate

The flow rate of each circulating water pump is 200,000 gallons per minute.

F_{sw} = actual salt water system flow rate

If the actual salt water flow rate is unknown or otherwise not readily available, a salt water flow rate of 0 gpm may be used in equation 2L.

The maximum flow rate for one salt water pump is listed on Attachment 2.

F_u = actual undiluted radwaste flow rate (gpm)

If the actual undiluted radwaste flow rate is less than 1% of the total dilution water flow rate, an undiluted radwaste flow rate of 0 gpm may be used in equation 2L.

Values of maximum undiluted radwaste flow rates for various waste streams are tabulated in Attachment 2.

A_{iu} = specific activity of nuclide, i, in the undiluted liquid radwaste (microcuries per milliliter)

DOSE TO THE ORGAN, o, FROM A LIQUID RELEASE (SIMPLIFIED EQUATION)

$$D_o = \{ [(449)(V_u)] / [(K_{sf})(F_d)] \} \Sigma A_{iu} \qquad \text{Eq. 11L}^1$$

D_o = the dose commitment to the maximum exposed ORGAN due to each release of radioactive liquid waste to an **UNRESTRICTED AREA**

449 = a conversion constant which includes:

1) 1.02E5 mrem/hr per microcurie/ml (the dose factor for I-131 to the thyroid)
2) 1.000 hr/60.00 min
3) 1.000 gallons/3.785 liters

V_u = volume of undiluted radwaste (liters)

K_{sf} = a constant, actually a safety factor, which is the ratio of the CCNPP organ dose limit to the organ dose limit of Control 3.11.1.2, (unitless)

---

1 Equations 11L has been derived from NUREG-0133, 4.3.

The safety factor chosen shall be less than or equal to 1.00. This ensures the organ dose is always less than or equal to the organ dose limit of Control 3.11.1.2.

A safety factor of 1.00 will yield a organ dose which corresponds to the organ dose limit of Control 3.11.1.2.

A safety factor of 0.500 will yield an organ dose which corresponds to one-half the organ dose limit of Control 3.11.1.2.

It is recommended that a safety factor of 1.0 be used for calculating the organ dose, however, other values--not to exceed 1.00--may be used as directed by the General Supervisor Chemistry.

The particular value selected for the safety factor is somewhat arbitrary, however a safety factor does provide plant personnel with a degree of administrative control over the use of simplified equations for generating radioactive liquid release permits. This administrative control is designed to minimize the possibility of violating Control 3.11.1.2 when simplifying assumptions are used.

The use of a safety factor is consistent with the ALARA philosophy that licensees should make every reasonable effort to maintain radiation exposures, and releases of radioactive materials in effluents to **UNRESTRICTED AREAS**, as low as is reasonably achievable.

This safety factor has been included in equation 11L to account for any potential nonconservatism associated with applying the I-131 thyroid dose conversion factor to all radionuclides identified in the liquid release. Such nonconservatism could conceivable be present whenever radionuclides having a dose conversion factor greater than that of I-131 are present in a liquid release.

F_d = dilution water flow rate (gpm) prior to the point of release to **UNRESTRICTED AREAS**

The actual dilution water flow rate is the sum of the circulating water flow rate, the salt water flow rate, and the undiluted radwaste flow rate.

The dilution water flow rate shall be calculated in accordance with equation 2L.

DILUTION WATER FLOW RATE

$$F_d = F_{cw} + F_{sw} + F_u \qquad \textbf{Eq. 2L}$$

F_{cw} = actual circulating water system flow rate

The flow rate of each circulating water pump is 200,000 gallons per minute.

F_{sw} = salt water system flow rate

If the actual salt water flow rate is unknown or otherwise not readily available, a salt water flow rate of 0 gpm may be used in equation 2L.

The maximum flow rate for one salt water pump is listed on Attachment 2.

F_u = actual undiluted radwaste flow rate (gpm)

If the actual undiluted radwaste flow rate is less than 1% of the total dilution water flow rate, an undiluted radwaste flow rate of 0 gpm may be used in equation 2L.

Values of maximum undiluted radwaste flow rates for various waste streams are tabulated in Attachment 2.

A_{iu} = specific activity of nuclide, i, in the undiluted liquid radwaste (microcuries per milliliter)

7. Corrective **ACTIONS**

a) CHEMISTRY SECTION surveillance procedures shall contain and/or reference administrative and/or Control limits for cumulative total body doses or cumulative organ doses resulting from liquid effluents and shall specify corrective actions to be initiated when these limits are exceeded.

b) Refer to Control 3.11.1.2 for actions to be taken in the event the calculated cumulative total body dose exceeds 3 mrem per calendar quarter or 6 mrem per calendar year.

c) Refer to Control 3.11.1.2 for actions to be taken in the event the calculated cumulative organ dose--for any organ--exceeds 10 mrem per calendar quarter or 20 mrem per calendar year.

LIMITS FOR THE LIQUID WASTE PROCESSING SYSTEM

1. Introduction

a) 10 CFR 50.36a requires licensees to maintain and use the equipment installed in the liquid waste processing system for the purpose of controlling effluents to the environment.

b) Radiological effluent controls have been established to implement the requirements of 10 CFR 50.36a.

c) Different documents (e.g., Technical Specifications or NUREG-0472) may reference this effluent control using a variety of synonyms. Examples of some of these synonyms include terms such as the PROJECTED DOSE, the 92-DAY PROJECTED DOSE, the 92-DAY CUMULATIVE DOSE, the DOSE IN A 92-DAY PERIOD, or the DOSE FOR THE PREVIOUS 92 DAYS. The ODCM methodology for calculating this dose – by whatever name – is based on a simple sum of the dose contributions for the previous 92 days. As result, all the terms listed above are considered as equivalent quantities for purposes of this effluent control at CCNPP. For simplicity, the ODCM generally uses the phrase "dose for the previous 92 days" when referencing this effluent control.

d) These radiological effluent controls are described below.

2. Radiological Effluent Controls

a) The liquid radwaste processing system shall be used to reduce the quantity of radioactive materials in liquid waste released to the environment whenever the total body dose to **MEMBERS OF THE PUBLIC**, from liquid waste discharged to **UNRESTRICTED AREAS**, is greater than 0.36 mrem for the previous 92 days (per Control 3.11.1.3).

b) The liquid radwaste processing system shall be used to reduce the quantity of radioactive materials in liquid waste released to the environment whenever the organ doses to **MEMBERS OF THE PUBLIC**, from liquid waste discharged to **UNRESTRICTED AREAS**, is greater than 1.20 mrem for the previous 92 days (per Control 3.11.1.3).

c) The routine surveillances which are performed to verify compliance with this radiological effluent controls are described below.

3. Surveillance Requirement(s)

a) The previous 92-day, cumulative, total body dose--to **MEMBERS OF THE PUBLIC** in **UNRESTRICTED AREAS**--shall be calculated, as described in the ODCM, at least once per 31 days (per Control 4.11.1.3).

b) The previous 92-day, cumulative, organ doses--to **MEMBERS OF THE PUBLIC** in **UNRESTRICTED AREAS**--shall be calculated, as described in the ODCM, at least once per 31 days (per Control 4.11.1.3).

c) The CCNPP organization(s) responsible for performing these surveillances are identified in the next section.

4. Responsible Plant Organization(s)

a) The CHEMISTRY SECTION is responsible for performing the surveillances, listed above, whenever the appropriate initiating conditions, listed below, are present.

5. Initiating Conditions

a) Perform the surveillances, listed above, at least once per 31 days (per Control 4.11.1.3).

b) For **BATCH RELEASES**, perform the surveillances, listed above, prior to each **BATCH RELEASE** of radioactive liquid waste in accordance with approved CHEMISTRY SECTION procedures.

c) For **CONTINUOUS RELEASES**, perform the surveillances, listed above, at least monthly (until the **CONTINUOUS RELEASE** has been terminated) and, if activity is identified[1] in the CONTINUOUS waste stream, the surveillances may be performed more often as specified in approved CHEMISTRY SECTION procedures.

d) Whenever the correct initiating conditions are present, the calculations required by the above mentioned surveillance(s) shall be completed in accordance with the methodology contained in the following section.

6. Calculation Methodology

a) The cumulative total body dose and the cumulative organ doses for the previous 92 days shall be calculated in accordance with equation 8L found in the section, "Limits On Cumulative Total Body Doses And Cumulative Organ Doses For Liquid Effluents", found elsewhere in the ODCM.

7. Corrective **ACTIONS**

a) CHEMISTRY SECTION surveillance procedures shall contain/and or reference administrative and/or Control limits for cumulative total body doses or cumulative organ doses resulting from liquid effluents and shall specify corrective **ACTIONS** to be initiated when these limits are exceeded.

b) Refer to Control 3.11.1.3 for **ACTIONS** to be taken in the event the calculated cumulative total body dose exceeds 0.36 mrem for the previous 92 days.

c) Refer to Control 3.11.1.3 for **ACTIONS** to be taken in the event the calculated cumulative organ dose--for any organ--exceeds 1.2 mrem for the previous 92 days.

---

1 The LOWER LIMITS OF DETECTION shall conform to Control 4.11.1.1.1, Table 4.11-1.

RADIOACTIVE GASEOUS EFFLUENTS

RELEASE PATHWAYS [B527]

1. Introduction

   a) Radioactive gaseous waste generated from operation of CCNPP may be released to the atmosphere.

   b) By design (i.e., in the absence of primary-to-secondary leaks), there are 2 pathways by which waste gas from the site may be discharged to the atmosphere. These pathways are listed below. General information related to each of these potential release pathways is contained on Attachment 7.

      (1) Unit 1 main vent stack

      (2) Unit 2 main vent stack

   c) Depending on plant conditions, (e.g., primary-to-secondary leaks) a potential exists for the release of radioactive materials from other pathways. Examples of these pathways are listed below. General information related to each of these potential release pathways is contained on Attachment 8.

      (1) auxiliary boiler deaerator

      (2) steam generator atmospheric steam dump system

      (3) plant nitrogen system

      (4) turbine building ventilation exhaust

      (5) emergency air lock

      (6) plant compressed air

      (7) main steam line penetrations

      (8) containment equipment hatch

      (9) auxiliary feed pumps

      (10) gland steam exhaust condenser

   d) All of these pathways are described below.

2. Unit 1 Main Vent Stack

   a) Dilution air and radioactive gaseous waste are discharged to the atmosphere through the Unit 1 main vent stack.

   b) The radioactive gaseous waste is mixed with and diluted by the outside air and building exhausts prior to exiting the Unit 1 main vent stack.

c) The Unit 1 main vent stack is secured to the Unit 1 reactor containment building.

d) The top of the Unit 1 main vent stack is at elevation 203.5 feet (mean sea level, MSL), and as such is 10.1 feet above the top of the reactor containment building dome. As a result, the Unit 1 main vent stack does not qualify as a "free-standing" stack greater than 80 meters tall[1].

e) The Unit 1 main vent stack is designed to accept gaseous radioactive waste from various sources. Sources which may contribute radioactive material to the Unit 1 main vent stack are tabulated in Attachment 7.

3. Unit 2 Main Vent Stack

a) Dilution air and radioactive gaseous waste are discharged to the atmosphere through the Unit 2 main vent stack.

b) The Unit 2 main vent stack is designed to accept radioactive gaseous waste from various sources.

c) The radioactive gaseous waste is mixed with and diluted by the outside air and building exhausts prior to exiting the Unit 2 main vent stack.

d) The Unit 2 main vent stack is secured to the Unit 2 reactor containment building.

e) The top of the Unit 2 main vent stack is at elevation 203.5 feet (MSL), and as such is 10.1 feet above the top of the reactor containment building dome. As a result, the Unit 2 main vent stack does not qualify as a "free-standing" stack greater than 80 meters tall.[1]

f) The Unit 2 main vent stack is designed to accept gaseous radioactive waste from various sources. Sources which may contribute radioactive material to the Unit 2 main vent stack are tabulated in Attachment 7.

4. Auxiliary Boiler Deaerator

a) Radioactive gases may be vented from the auxiliary boiler deaerator during periods of primary to secondary leakage.

b) Steam from the Moisture Separator Reheater (MSR) may be used in the deaerator. In the event of a primary to secondary leak, the MSR steam could become contaminated. Therefore, a potential exists for the release of radioactive gases in steam discharged from the auxiliary boiler deaerator.

c) The discharge of steam is accomplished via a relief vent, 0-VBV-1891, which allows excess pressure to be vented to atmosphere.

d) In the event the auxiliary boiler deaerator were to become contaminated, the amount of radioactivity released and the resulting doses/dose rates at the **SITE BOUNDARY** can be estimated if the following parameters are known:

(1) the MSR steam activity obtained from a sample,

---

1 As defined by Regulatory Guide 1.111

(2) the duration of the discharge,

(3) the estimated steam discharge flow rate, and

(4) the measured or average annual meteorological conditions.

e) In accordance with applicable safety evaluations[1], continued operation of this system is allowed as long as the concentration of radionuclides in the auxiliary boiler steam drum is less than 96 MPCs.

5. Steam Generator Atmospheric Steam Dump System

a) Radioactive gases are not normally vented from this pathway.

b) Radioactive gases may be vented from the steam generator atmospheric steam dump system during periods of primary to secondary leakage.

c) If a primary to secondary leak is present and the steam dump valves are opened, the amount of radioactivity released and the resulting doses/dose rates at the **SITE BOUNDARY** can be estimated if the following parameters are known (per UFSAR, 10.1.2.2):

(1) the specific activity of a main steam sample as determined by **GAMMA ISOTOPIC ANALYSIS**,

(2) the duration of discharge,

(3) the estimated steam discharge flow rate, and

(4) the measured or average annual meteorological conditions.

d) The total capacity of the atmospheric steam dump valve is 5 percent of steam flow with the reactor at full power (per UFSAR, 10.1.2.2).

6. Plant Nitrogen System

a) Radioactive gases are not normally vented from this pathway.

b) Nitrogen is supplied to various components which contain radioactive materials (e.g., VCT).

c) In the event the plant nitrogen system were to become contaminated, the amount of radioactivity released and the resulting doses/dose rates at the **SITE BOUNDARY** can be estimated if the following parameters are known:

(1) the specific activity of the gas in the plant nitrogen system as determined by **GAMMA ISOTOPIC ANALYSIS**,

(2) the pressure of the nitrogen system,

(3) the volume of the nitrogen system, and

[1] See 50.59 Log No. 90-0-027-037-R1.

(4) the measured or average annual meteorological conditions.

d) It should be noted that the amount of radioactivity released could be estimated based on knowledge of other related parameters.

e) In accordance with applicable safety evaluations[1], continued operation of this system is allowed as long as the concentration of radionuclides is less than 13,400 MPCs.

7. Turbine Building Exhaust

a) Radioactive gases are not normally vented from this pathway.

b) In the event radioactive gases were to be released through the turbine building exhaust, the amount of radioactivity released and the resulting doses/dose rates at the **SITE BOUNDARY** can be estimated if the following parameters are known:

(1) the specific activity of the turbine building air,

(2) the duration of the discharge,

(3) the estimated flow rate during the discharge, and

(4) the measured or average annual meteorological conditions.

8. Emergency Air Lock

a) Radioactive gases are not normally vented from this pathway.

b) In the event radioactive gases were to be released through the emergency air lock, the amount of radioactivity released and the resulting doses/dose rates at the **SITE BOUNDARY** can be estimated if the following parameters are known:

(1) the containment air activity obtained from a sample,

(2) the volume of the air lock (9.558 cubic meters),

(3) the measured or average annual meteorological conditions.

9. Plant Compressed Air

a) Radioactive gases are not normally vented from this pathway.

b) In the event the plant compressed air system were to become contaminated, the amount of radioactivity released and the resulting doses/dose rates at the **SITE BOUNDARY** can be estimated if the following parameters are known:

(1) the specific activity of the compressed air system,

(2) the pressure of the compressed air system,

(3) the volume of the compressed air system, and

[1] See 50.59 Log No. 90-0-074-011-R1.

(4) the measured or average annual meteorological conditions.

10. Main Steam Line Penetrations

a) Radioactive gases are not normally vented from this pathway.

b) This penetration is cooled by outside air.

c) Gases may be released to the atmosphere through safety vents to the roof at elevation 91.5 feet.

d) See UFSAR 9.8.2.3.

11. Steam Driven Auxiliary Feed Pumps

a) Radioactive gases are not normally vented from this pathway.

b) In the event radioactive gases were to be released through the auxiliary feed pumps, the amount of radioactivity released and the resulting doses/dose rates at the **SITE BOUNDARY** can be estimated if the following parameters are known:

(1) the activity in the steam,

(2) the volume of steam released.

12. Containment Equipment Hatch

a) Radioactive gases are not normally vented from this pathway.

b) In the event radioactive gases were to be released through the containment equipment hatch, the amount of radioactivity released and the resulting doses/dose rates at the **SITE BOUNDARY** can be estimated if the following parameters are known:

(1) the containment air activity obtained from a sample,

(2) the volume of the air released,

(3) the measured or average annual meteorological conditions.

13. Gland Steam Exhaust Condenser

a) Radioactive gases are not normally vented from this pathway.

b) In the event radioactive gases were to be released through the gland steam exhaust condenser, the amount of radioactivity released and the resulting doses/dose rates at the **SITE BOUNDARY** can be estimated if the following parameters are known:

(1) activity in the gland steam exhaust condenser,

(2) the flow rate through the gland steam exhaust condenser,

(3) the duration of the leak, and

(4) the measured or average annual meteorological conditions.

14. Other unmonitored release paths should be evaluated and added to the ODCM as necessary.

TYPES OF GASEOUS RELEASES

1. All gaseous radwaste releases are classified as either **BATCH RELEASES** or **CONTINUOUS RELEASES**.

2. The definition of **BATCH RELEASE** is included in the definitions section of the ODCM.

3. The definition of **CONTINUOUS RELEASE** is included in the definitions section of the ODCM.

4. Gaseous radwaste discharges have been classified as CONTINUOUS or BATCH as shown on Attachments 7 and 8.

PROCESSING EQUIPMENT

1. Simplified Flow Diagram

   a) An overview of the gaseous waste processing system, including major equipment and (normal) flow paths, is outlined on Attachment 9.

2. Modifications

   a) Licensed initiated major changes to the gaseous waste processing system shall be reported to the Commission in the Radioactive Effluent Release Report for the period in which the modification to the waste system was completed (per Technical Specification 5.6.3). The discussion of each change shall contain:

      (1) A description of the equipment, components and processes involved; and

      (2) Documentation of the fact that the change, including the safety analysis, was reviewed and found acceptable by the onsite review function.

   b) A "major" change or modification includes, but is not limited to, the removal or permanent bypass of any of the following:

      (1) waste gas decay tank

      (2) waste gas surge tank

      (3) degassifier

      (4) HEPA filter

      (5) charcoal filter

3. Detailed Description

   a) A detailed description of the gaseous waste processing system is beyond the scope of the ODCM.

b) For more information on the Waste Gas System, see the CCNPP System Description Number 14A, "Waste Gas System."

c) For more information on the Waste Gas System, see the CCNPP Updated Final Safety Analysis Report, Chapter 11, "Waste Processing And Radiation Protection."

GASEOUS EFFLUENT RADIATION MONITORS AND SETPOINTS

1. Wide Range Gas Monitor (1-RE-5416)

a) General description

(1) The Wide Range Gas Monitor (WRGM) contains 3 radiation elements

(a) low-range noble gas detector

i) Designation of radiation element: 1-RE-5416

ii) type of radiation element: Off-line scintillation

iii) output: digital

iv) Radiation indicator: 1-RIC-5415

v) units for radiation indicator are user programmable and are normally set to microcuries per cubic centimeter or microcuries per second

vi) supplier: Sorrento Electronics (formerly General Atomics)

(b) mid-range, noble gas detector

i) Designation of radiation element: 1-RE-5417

ii) type of radiation element: Solid state

iii) This noble gas monitor is used to measure the release of radioactivity from unit 1 main vent in the event of an accident. (UFSAR, 11.2.3.2.12)

iv) setpoints for the mid-range detector will not be addressed in the ODCM

(c) high-range, noble gas detector

i) Designation of radiation element: 1-RE-5418

ii) type of radiation element: Solid state

iii) This detector is used to measure the release of radioactivity from unit 1 main vent in the event of an accident. (UFSAR, 11.2.3.2.12)

iv) setpoints for the high-range detector will not be addressed in the ODCM

(2) The low range detector will be the only detector addressed further in the ODCM.

b) Functions of 1-RE-5416

(1) continuously measure the release rate of noble gases emanating from the Unit 1 main vent stack (Control 4.11.2.1.1 or 4.11.2.1.2, Table 4.11-2)

(2) continuously indicate (via 1-RIC-5415) the release rate of noble gases emanating from the Unit 1 main vent stack (Control 4.11.2.1.1 or Control 4.11.2.1.2, Table 4.11-2)

(3) alarm (via 1-RIC-5415) prior to exceeding the site-boundary, noble-gas, total-body-dose-rate limit of 500 mr/yr (per Control 3.11.2.1.a)

(4) alarm (via 1-RIC-5415) prior to exceeding the site-boundary, noble-gas, skin-dose-rate limit of 3000 mr/yr (per Control 3.11.2.1.a)

c) **OPERABILITY** of 1-RE-5416

(1) This monitor shall be operable (or have **OPERABILITY**) when it is capable of performing its specified function(s).

(2) The functions of this monitor are listed in section (b) above.

d) Monitors equivalent to 1-RE-5416

(1) 1-RE-5415 [the "Westinghouse Plant Vent Stack Monitor"] has the capability of providing the measurement and alarm functions of 1-RE-5416 during times when 1-RE-5416 is declared inoperable.

(2) 1-RE-5415 provides redundant monitoring [for 1-RE-5416] at the low end of the concentration ranges (UFSAR 11.2.3.2.12).

(3) In the event 1-RE-5415 is inoperable or otherwise unavailable, 1-RE-5416 may fulfill the measuring, indicating, and alarming functions normally provided by 1-RE-5415.

e) Radiological effluent controls for 1-RE-5416

(1) Control 3.3.3.9 states that releases via the plant vent stack may continue if any one of the following three conditions are satisfied:

(a) 1-RE-5415 is operable AND the alarm setpoint for 1-RI-5415 is set to ensure the annual dose rates due to noble gases at the **SITE BOUNDARY** are less than 500 mr/yr to the total body and are less than 3000 mr/yr to the skin (per Control 3.11.2.1.a), or

(b) an "equivalent monitor" is operable AND the alarm trip setpoint for the "equivalent monitor" is set to ensure annual dose rates due to noble gases at the **SITE BOUNDARY** are less than 500 mr/yr to the total body and are less than 3000 mr/yr to the skin (per Control 3.11.2.1.a), or

(c) grab samples are obtained and analyzed for gross activity at least once per 24 hours in accordance with Controls 3.11.2.1.a, 4.11.2.1.1, and 4.11.2.1.2 (per Control 4.3.3.9, Table 3.3-12, **ACTION** 37).

f) Surveillances for 1-RE-5416

(1) Control 4.3.3.9 requires demonstrating the **OPERABILITY** of 1-RE-5416 by satisfying the checks, calibrations, and tests listed below:

(a) **CHANNEL CHECK** within the past 24 hours

(b) **SOURCE CHECK** within the past 31 days

(c) **CHANNEL CALIBRATION** within the past 18 months

(d) **CHANNEL FUNCTIONAL TEST** within the past 6 six months

g) Setpoints for 1-RIC-5415

(1) Requirements and commitments

(a) The alarm and fixed setpoints ... shall be determined and adjusted in accordance with the methodology and parameters of the ODCM. (Control 3.3.3.9)

(b) The method for calculating fixed or adjustable setpoints shall be provided in the ODCM (per NUREG-0133, 5.1.1).

(2) There are four radiation alarm setpoints associated with, or otherwise related to, the WRGM.

(a) 1-RIC-5415 fixed high-high radiation alarm setpoint

(b) 1-RIC-5415 fixed high radiation alarm setpoint

(c) 1-RIC-5415 adjustable plant computer high radiation alarm setpoint

(d) 1-RIC-5415 adjustable plant computer alert setpoint.

(3) In order to simplify the setpoint terminology, eliminate ambiguity, and minimize the possibility of misinterpretation, the ODCM will refer to these setpoints as follows

(a) The 1-RIC-5415 fixed high-high radiation alarm setpoint will be referred to as the fixed high alarm setpoint

(b) The 1-RIC-5415 fixed high radiation alarm setpoint will be referred to as the fixed alert setpoint

(c) The 1-RIC-5415 adjustable plant computer high radiation alarm setpoint will be referred to as the adjustable setpoint

(d) The 1-RIC-5415 adjustable plant computer alert setpoint will be referred to as the alert setpoint.

(4) Each of these alarm setpoints are described below.

h) Fixed high alarm setpoint for 1-RIC-5415

(1) General information

(a) The fixed high alarm setpoint is not adjusted for each release.

(b) Whenever the fixed high alarm setpoint is exceeded, an alarm will be generated.

(c) The current value for the fixed high alarm setpoint is specified in the CCNPP Alarm Manual.

(d) The CCNPP Alarm Manual[1] refers to the fixed high alarm setpoint as the Unit 1 Wide Range Noble Gas Radiation Monitor high alarm setpoint.

(e) The fixed high alarm setpoint is integral to the WRGM, as purchased from the supplier.

(f) The fixed high alarm setpoint is administratively controlled by EN-1-100.

(g) The fixed high alarm setpoint shall be calculated as described below.

(2) Calculating the fixed high alarm setpoint for 1-RIC-5415

(a) The fixed high alarm setpoint for 1-RIC-5415 (WRGM) shall be calculated in accordance with equation 1G.[2]

FIXED HIGH ALARM SETPOINT FOR 1-RIC-5415

$$S_{fixhh} \leq [c' / (x/Q)] [F_{dx} / (F_{d1} + F_{d2})] [A_{TLn}] \qquad \text{Eq. 1G}^{1}$$

Where,

S_{fixhh} = the fixed high alarm setpoint for 1-RIC-5415 (microcuries per second)

c' = a conversion constant (1E6 cubic centimeters per cubic meter)

---

1 The CCNPP Alarm Manual is controlled by NO-1-201.

2 The alarm and trip setpoints ... shall be determined and adjusted in accordance with the methodology and parameters of the ODCM. (Control 3.3.3.9).

x/Q = the highest calculated annual average relative concentration for any area at or beyond the **UNRESTRICTED AREA** boundary (2.2E-6 seconds per cubic meter)

Unit 1 main vent releases are considered "long-term" releases[2], and as such, the highest historical annual average dispersion factor, (x/Q), is used in the setpoint calculations.

The highest annual average dispersion factor (x/Q) is 2.2E-6 (UFSAR, 2.3.6.3) for purposes of routine, long-term concentrations (e.g., routine noble gas releases)

The maximum annual average on-shore concentrations occur in the southeast sector at a distance of 1300 meters for purposes of routine, long-term concentrations (e.g., routine noble gas releases) (UFSAR, 2.3.6.3)

F_{dx} = the estimated main vent stack (diluted gaseous radwaste) flow rate for unit, x, (cubic meters per second)

The estimated main vent stack flow rates for Unit 1 and Unit 2 are defined below.

F_{d1} = the estimated main vent stack flow rate for Unit 1 (cubic meters per second)

Since the main vent stack flow rate will vary depending on the configuration of air dampers and the input gas streams, nominal main vent stack flow rate is used to calculate the fixed high alarm setpoint.

Use the nominal Unit 1 main vent stack flow rate listed on Attachment 7.

The main vent stack flow rate shall be determined, in accordance with approved procedures, at least once per 6 months (± 25%). The Test and Equipment Unit shall be responsible for performing this test. The results of the main vent flow rate test shall be evaluated to ensure the main vent flow rates used in the ODCM are an accurate reflection of the true main vent flow rates. The Radiological Effluent Technical Specifications (RETS) Program Manager is responsible for modifying the (main vent flow rates used in the) ODCM in the event the main vent flow rate for either Unit 1 or Unit 2 has increased to a value which is greater than the maximum discharge flow rates listed on Attachment 7.

F_{d2} = the estimated main vent stack (diluted gaseous radwaste) flow rate for unit 2 (cubic meters per second)

Since the main vent stack flow rate will vary depending on the configuration of air dampers and the input gas streams, nominal main vent stack flow rate is used to calculate the fixed high alarm setpoint.

Use the nominal Unit 2 main vent stack flow rate listed on Attachment 7.

The main vent stack flow rate shall be determined, in accordance with approved procedures, at least once per 6 months (± 25%). The Test and Equipment Unit shall be responsible for performing this test. The results of the main vent flow rate test shall be evaluated to ensure the main vent flow rates used in the ODCM are an accurate reflection of the true main vent flow rates. The RETS Program Manager is responsible for modifying the (main vent flow rates used in the) ODCM in the event the main vent flow rate for either Unit 1 or Unit 2 has increased to a value which is greater than the maximum discharge flow rates listed on Attachment 7.

---

1 Equation 1G has been derived from NUREG-0133, 5.2.1.
2 NUREG-0133, 3.3

A_{TLn} = the sum of the total specific activities of all radionuclides found in TYPICAL GASEOUS RADWASTE RELEASES (microcuries/cm^3)

Calculate A_{TLn} in accordance with equation 2G.

SPECIFIC ACTIVITY CORRESPONDING TO THE **SITE BOUNDARY LIMIT**

$$\Sigma[(f_i)(A_{TLn})]/A_{iLt} \leq L_{MPC} \qquad \text{Eq. 2G}^1$$

Where,

f_i = a fraction which represents the relative activity contribution of noble gas radionuclide i to the total noble gas activity for TYPICAL GASEOUS EFFLUENTS (unitless)

This value may be obtained using the guidance provided on Attachment 5.

A_{iLt} = the specific activity limit for radionuclide, i, as obtained from 10 CFR 20, Appendix B, Table II, Column 1 (microcuries/cm^3)

For all the radionuclides found in **TYPICAL RADWASTE EFFLUENTS**, use the value from 10 CFR 20, Appendix B, Table II, Column 1. An acceptable alternative is to assume an isotopic mix which results in a more conservative setpoint.

L_{MPC} = the site MPC limit (MPCs) for **UNRESTRICTED AREAS**

The value chosen for L_{MPC} in this equation is 2. The basis for this limit is 10 CFR 50.72.

It has been shown[2] that, for the radionuclides present in TYPICAL GASEOUS EFFLUENTS from CCNPP, the 2 MPC limit is more restrictive than the limits of Control 3.11.2.1(a).

It should be noted that by using "2" as the MPC limit (10 CFR 50.72), instead of using the limits of Control 3.11.2.1(a), a safety factor has been incorporated into equation 2G.

An alarm setpoint corresponding to 2 MPCs serves to initiate a determination of whether the "4-hour NRC notification" (specified in 10 CFR 50.72) is required.

---

(3) Documenting the fixed high alarm setpoint

(a) Whenever the fixed high alarm setpoint is calculated, the specific values chosen for each of the variables shall be documented in accordance with EN-1-100.

---

1 This equation has been derived from 10 CFR 20, Appendix B, Table II, Note 1.

2 Addendum To Setpoint Calculations For WRGM Monitors 1-RIC-5415 and 2-RIC-5415, R.L. Conatser, December 10, 1991.

(4) Changing the fixed high alarm setpoint for 1-RIC-5415

(a) If the fixed high alarm setpoint calculated in accordance with equation 1G exceeds the maximum range of the monitor, the fixed high setpoint shall be adjusted to a value which falls within the normal operating range of the monitor.

(b) The fixed high alarm setpoint may be established at values lower than the maximum allowable setpoint, if desired.

(c) A setpoint change should be initiated whenever any of the parameters identified in the setpoint calculation equations (identified in this section of the ODCM) have changed.

(d) The fixed high alarm setpoint should not be changed unless one of the following occurs:

i) the relative activity[1] of any radionuclide in TYPICAL GASEOUS EFFLUENTS has changed by greater than 10%, and the new radionuclide mixture yields a fixed setpoint which is 10% (or more) lower than the current fixed setpoint,

ii) the historical maximum annual average atmospheric dispersion factor has changed,

iii) the MPC limit at the **SITE BOUNDARY**, (L_{MPC}) has changed,

iv) the Unit 1 or Unit 2 main vent stack flow rate has changed by greater than or equal to 10%[2],

v) the values listed in 10 CFR 20, Table II, column 1 have changed,

vi) the radiation monitor has been recently calibrated, repaired, or otherwise altered, or

vii) the monitor is not conservative in its function (see "Functions of 1-RE-5416" earlier in this section).

(e) EN-1-100 contains the administrative controls associated with changing and approving fixed high alarm setpoint.

---

1 As determined in accordance with Attachment 5.
2 As determined by surveillance test results (e.g., STP-M-462-1 or STP-M-462-2).

i) Fixed alert setpoint for 1-RIC-5415

(1) General information

(a) The fixed alert setpoint is not adjusted for each release.

(b) Whenever the fixed alert setpoint is exceeded, an alarm will be generated.

(c) The CCNPP Alarm Manual does not reference this setpoint.

(d) The fixed alert setpoint is integral to the WRGM, as purchased from the supplier.

(e) The current value for the fixed alert setpoint is specified in the CCNPP Setpoint File.

(f) The fixed alert setpoint is administratively controlled by EN-1-100.

(g) The fixed alert setpoint shall be calculated as described below[1].

(2) Calculating the fixed alert setpoint for 1-RIC-5415

(a) The fixed alert setpoint for 1-RIC-5415 shall be calculated as described below:

FIXED ALERT SETPOINT FOR 1-RIC-5415

$$S_{fixh} \leq K_{sf} [S_{fixhh}] \qquad \text{Eq. 3G}$$

Where,

S_{fixh} = the fixed alert setpoint for 1-RIC-5415 (microcuries per second)

S_{fixhh} = the fixed high alarm setpoint for 1-RIC-5415 (microcuries per second)

K_{sf} = a constant, actually a safety factor, which is the fraction of the fixed high setpoint (unitless).

The safety factor chosen shall be less than or equal to 1.00. This ensures the fixed alert setpoint is always less than or equal to the fixed high alarm setpoint.

A safety factor of 1.00 will yield a fixed alert setpoint which corresponds to the fixed high alarm setpoint.

A safety factor of 0.100 will yield a fixed alert setpoint which corresponds to one-tenth the fixed high alarm setpoint.

---

1 The alarm and trip setpoints ... shall be determined and adjusted in accordance with the methodology and parameters of the ODCM. (Control 3.3.3.9).

It is recommended that a safety factor of 0.1 be used for calculating the fixed alert setpoint, however, other values--not to exceed 1.00--may be used as directed by the General Supervisor Chemistry.

The particular value selected for the safety factor is somewhat arbitrary, however a value less than 1.00 does provide plant personnel with adequate time to respond to changing plant conditions and to initiate corrective **ACTIONS** so as to minimize the possibility of violating either the 10 CFR 50.72 limit or the Control 3.3.3.9 limits.

The use of the safety factor is consistent with ALARA philosophy that licensees should make every reasonable effort to maintain radiation exposures, and releases of radioactive materials in effluents to **UNRESTRICTED AREAS**, as low as is reasonably achievable.

The use of a "safety margin" is in accordance with the provisions of NUREG-0133 which states that "... the alarm and trip setpoints ... should correspond to a value(s) which represents a safe margin of assurance that the instantaneous gaseous release limit of Control 3.11.2.1(a) will not be exceeded." (per NUREG-0133, 5.1.1).

This safety margin will prevent minor fluctuations in the nominal plant vent stack flow rates, errors in monitor efficiencies, and other statistical aberrations from adversely impacting the calculated fixed alert setpoint.

---

(3) Documenting the fixed alert setpoint

(a) Whenever the fixed alert setpoint is calculated, the specific values chosen for each of the variables shall be documented in accordance with EN-1-100.

(4) Changing the fixed alert setpoint for 1-RIC-5415

(a) A setpoint change should be initiated whenever any of the parameters identified in equation 3G have changed.

(b) The fixed alert setpoint should be changed whenever the fixed high setpoint is changed.

(c) The fixed alert setpoint should be changed if the value of the safety factor is changed.

(d) See EN-1-100 for a description of activities associated with setpoint changes and setpoint approvals.

j) Adjustable alarm setpoint for 1-RIC-5415

(1) General information

(a) Whenever this monitor is satisfying the minimum channels operable requirement (per Control 3.3.3.9), the adjustable setpoint is calculated and adjusted prior to each release of a WGDT, each containment vent, and each containment purge discharged via the main vent.

(b) The adjustable setpoint is based on the specific activities of the radionuclides present in either the WGDT or the containment building, whichever is applicable. (The radionuclide concentrations are determined by radiochemical analysis in accordance with applicable CHEMISTRY SECTION procedures as required by Control 4.11.2.1.2).

(c) Whenever the adjustable setpoint is exceeded, the WGDT, PURGE, or vent discharge via the main vent will be manually suspended.

(d) Refer to the Alarm Manual for a full list of operator ACTIONS taken in response to this alarm.

(e) The adjustable setpoint corresponds to the maximum concentration of radionuclides anticipated or expected when discharging a WGDT, a containment vent, or a containment purge via the main vent. For containment purges during outages, system evolutions may cause containment atmosphere activity to increase above what is normally expected for short periods of time.

(f) The value for the adjustable setpoint is recorded on the gaseous release permit in accordance with applicable CHEMISTRY SECTION procedures.

(g) This alarm is not integral to the main vent radiation monitor, as purchased from the supplier.

(h) This alarm is generated by the plant computer which monitors output from 1/2-RIC-5415, and provides an alarm to plant operators when the 1/2-RIC-5415 adjustable setpoint has been exceeded.

(i) When this monitor is satisfying the minimum channels operable requirement (per Control 3.3.3.9), a value for the adjustable alarm setpoint shall be calculated prior to each release of a WGDT, each containment vent, and each containment purge as shown below.

(2) Calculating the adjustable setpoint for 1/2-RIC-5415

(a) The adjustable setpoint is based on the specific activity of the radionuclides in the undiluted gaseous waste (as determined by radiochemical analysis per Control 4.11.2.1.2), and the alarm setpoint is calculated as shown below.

ADJUSTABLE SETPOINT FOR 1/2-RIC-5415

$$S_{adj} \leq (K_{sf}) \; [\, (c' \, F_u \, \Sigma A_{iu} \; e_i \,) + Bkg \,] \qquad \text{Eq. 29G}^{1}$$

May 2004

S_{adj} = the adjustable setpoint for 1/2-RIC-5415 (microcuries per second)

K_{sf} = a constant, actually a safety factor, which allows for fluctuation in radiation monitor response (unitless)

This safety factor helps ensure the release is not unnecessarily terminated due to (1) electronic anomalies which cause spurious monitor responses, (2) statistical fluctuations in disintegration rates, (3) statistical fluctuations in detector efficiencies, (4) errors associated with sample analysis, (5) errors associated with monitor calibrations[2], and (6) anticipated short term variations in containment activity (applicable to containment purges only).

It is recommended that a safety factor of 10 for containment purge releases be used for calculating the adjustable setpoint. However, other values for purge releases -- not to exceed 10 -- may be used as directed by the General Supervisor Chemistry. A safety factor of 1.5 shall be used for all other gaseous releases.

The particular value selected for the safety factor is somewhat arbitrary, however a value less than or equal to 10 does provide plant personnel with adequate time to respond to changing plant conditions and to initiate corrective **ACTIONS** so as to minimize the possibility of violating either the 10 CFR 50.72 limit or the Control 3.3.3.9 limits.

The use of the safety factor is consistent with ALARA philosophy that licensees should make every reasonable effort to maintain radiation exposures, and releases of radioactive materials in effluents to **UNRESTRICTED AREAS**, as low as is reasonably achievable.

The use of a "safety margin" is in accordance with the provisions of NUREG-0133 which states that ". . . the alarm and trip setpoints . . . should correspond to a value(s) which represents a safe margin of assurance that the instantaneous gaseous release limit of Control 3.11.2.1(a) will not be exceeded."
(per NUREG-0133, 5.1.1).

---

1 Equation 29G has been derived from NUREG-0133, Addendum, page AA-1.

2 The "analysis errors" and "calibration errors" refer to errors which are within established quality assurance and quality control limits.

This safety margin will prevent minor fluctuations in the nominal plant vent stack flow rates, errors in monitor efficiencies, and other statistical aberrations from adversely impacting the calculated adjustable setpoint. Additionally for a special case of containment purges during outages, the safety factor allows for short term variations in activity created as a result of system evolutions in containment.

F_u = maximum undiluted radwaste flow rate (cubic meters per second)

Values of maximum undiluted radwaste flow rates for various waste streams are tabulated in Attachment 7. May 2004

A_{iu} = specific activity of radionuclide, i, in the undiluted waste stream, either the WGDT or the containment building (microcuries per cubic centimeter) May 2004

e_i = absolute detector efficiency for nuclide, i (microcuries Xe-133 equivalent per microcuries nuclide i)

The detector efficiency for each radionuclide may be calculated from data collected during calibration of the radiation monitor.

Bkg = an approximation of the detector background (microcuries per second) May 2004

c' = a conversion constant (1E6 cubic centimeters per cubic meter)

(3) Documenting the adjustable setpoint for 1/2-RIC-5415

(a) Whenever the adjustable setpoint is calculated, the specific values chosen for each of the variables shall be documented in accordance with approved CHEMISTRY SECTION procedures (e.g., CP-604).

(4) Changing the adjustable setpoint for 1/2-RIC-5415

(a) In all cases, the adjustable setpoint shall be set to a value which is less than or equal to the fixed setpoint.

(b) If the adjustable setpoint exceeds the maximum range of the monitor, the setpoint shall be adjusted to a value which falls within the normal operating range of the monitor.

(c) CHEMISTRY SECTION procedures (e.g., CP-604) contain administrative controls associated with calculating and approving an adjustable setpoint.

(d) Whenever this monitor is satisfying the minimum channels operable requirement (per Control 3.3.3.9) the calculated value for the adjustable setpoint shall be entered into the plant computer prior to each release of a WGDT, a containment vent, or a containment purge via the main vent.

k) Alert setpoint for 1-RIC-5415

(1) General information

(a) The alert setpoint is applicable to containment purges only.

(b) Whenever this monitor is satisfying the minimum channels operable requirement (per Control 3.3.3.9), the alert setpoint is calculated and adjusted prior to each containment purge discharged via the main vent.

(c) The alert setpoint is based on the specific activities of the radionuclides present in the containment building. (The radionuclide concentrations are determined by radiochemical analysis in accordance with applicable CHEMISTRY SECTION procedures as required by Control 4.11.2.1.2).

(d) Whenever the alert setpoint is exceeded the PURGE via the main vent may continue.

(e) The alert setpoint corresponds to a level of activity which indicates additional source term(s) may be present, and as a result, additional notifications and/or actions are required to identify the source and to accurately account for the activity discharged.

(f) The value for the alert setpoint is recorded on the gaseous release permit in accordance with applicable CHEMISTRY SECTION procedures.

(g) This alarm is not integral to the main vent radiation monitor, as purchased from the supplier.

(h) This alarm is generated by the plant computer which monitors output from 1/2-RIC-5415, and provides an alarm to plant operators when the 1/2-RIC-5415 alert setpoint has been exceeded.

(i) When this monitor is satisfying the minimum channels operable requirement (per Control 3.3.3.9), a value for the alert setpoint shall be calculated prior to each containment purge via the main vent as shown below.

(2) Calculating the alert setpoint for 1/2-RIC-5415

(a) The alert setpoint is based on the specific activity of the radionuclides in the undiluted gaseous waste (as determined by radiochemical analysis per Control 4.11.2.1.2), and the setpoint is calculated as shown below.

ALERT SETPOINT FOR 1/2-RIC-5415

$$S_{alert} \leq (1.50)\ [\,(c'\ F_u \sum A_{iu}\ e_i\,) + Bkg\,] \qquad \text{Eq. 29G}^{1}$$

May 2004

S_{alert} = the alert setpoint for 1/2-RIC-5415 (microcuries per second)

1.50 = a constant, actually a safety factor, which allows for fluctuation in radiation monitor response (unitless)

This safety factor helps ensure the release is not unnecessarily terminated due to (1) electronic anomalies which cause spurious monitor responses, (2) statistical fluctuations in disintegration rates, (3) statistical fluctuations in detector efficiencies, (4) errors associated with sample analysis, and (5) errors associated with monitor calibrations[2].

---

1 Equation 29G has been derived from NUREG-0133, Addendum, page AA-1.

2 The "analysis errors" and "calibration errors" refer to errors which are within established quality assurance and quality control limits.

The use of the safety factor is consistent with ALARA philosophy that licensees should make every reasonable effort to maintain radiation exposures, and releases of radioactive materials in effluents to **UNRESTRICTED AREAS**, as low as is reasonably achievable.

The use of a "safety margin" is in accordance with the provisions of NUREG-0133 which states that "... the alarm and trip setpoints ... should correspond to a value(s) which represents a safe margin of assurance that the instantaneous gaseous release limit of Control 3.11.2.1(a) will not be exceeded." (per NUREG-0133, 5.1.1).

This safety margin will prevent minor fluctuations in the nominal plant vent stack flow rates, errors in monitor efficiencies, and other statistical aberrations from adversely impacting the calculated alert setpoint.

F_u = maximum undiluted radwaste flow rate (cubic meters per second)

Values of maximum undiluted radwaste flow rates for various waste streams are tabulated in Attachment 7.

A_{iu} = specific activity of radionuclide, i, in the containment building (microcuries per cubic centimeter) May 2004

e_i = absolute detector efficiency for nuclide, i (microcuries Xe-133 equivalent per microcuries nuclide i)

The detector efficiency for each radionuclide may be calculated from data collected during calibration of the radiation monitor.

Bkg = an approximation of the detector background (microcuries per second) May 2004

c' = a conversion constant (1E6 cubic centimeters per cubic meter)

(3) Documenting the alert setpoint for 1/2-RIC-5415

(a) Whenever the alert setpoint is calculated, the specific values chosen for each of the variables shall be documented in accordance with approved CHEMISTRY SECTION procedures (e.g., CP-604).

(4) Changing the alert setpoint for 1/2-RIC-5415

(a) In all cases, the alert setpoint shall be set to a value which is less than or equal to the fixed setpoint.

(b) If the alert setpoint exceeds the maximum range of the monitor, the setpoint shall be adjusted to a value which falls within the normal operating range of the monitor.

(c) CHEMISTRY SECTION procedures (e.g., CP-604) contain administrative controls associated with calculating and approving an alert setpoint.

(d) Whenever this monitor is satisfying the minimum channels operable requirement (per Control 3.3.3.9) the calculated value for the alert setpoint shall be entered into the plant computer prior to each containment purge via the main vent.

2. Wide Range Gas Monitor (2-RE-5416)

   a) all information related to 1-RE-5416 is applicable to the Unit 2 WRGM with the following exceptions(s)

   b) Monitors equivalent to 2-RE-5416

      (1) 2-RE-5415 [the "Westinghouse Plant Vent Stack Monitor"] has the capability of providing the measurement and alarm functions of 2-RE-5416 during times when 2-RE-5416 is declared inoperable

      (2) 2-RE-5415 provides redundant monitoring [for 2-RE-5416] at the low end of the concentration ranges (UFSAR 11.2.3.2.12)

3. Westinghouse Plant Vent Stack Monitor (1-RE-5415)

   a) The Westinghouse Plant Vent Stack Monitor contains 2 radiation elements

      (1) 1-RE-5414

         (a) particulate detector

         (b) off-line scintillation detector

         (c) analog output

         (d) supplies signals to radiation indicator 1/2-RI-5414

         (e) values displayed by 1/2-RI-5414 are in units of counts per minute

         (f) the detector manufacturer is Westinghouse

      (2) 1-RE-5415

         (a) noble gas detector

         (b) off-line GM Tube

         (c) analog output

         (d) supplies signals to radiation indicator 1/2-RI-5415

         (e) values displayed by 1/2-RI-5415 are in units of counts per minute

         (f) the detector manufacturer is Westinghouse

   b) Functions of 1-RE-5414

      (1) The functions of 1-RE-5414 are mentioned here only as a basis for excluding this radiation element from the setpoint controls of Control 3.3.3.9.

      (2) This monitor (the particulate monitor) was retired in place.

c) Functions of 1-RE-5415[1]

(1) continuously measure the activity (cpm) of noble gases emanating from the Unit 1 main vent stack (Control 4.11.2.1.2, Table 4.11-2)

(2) continuously indicate (via 1-RI-5415) the activity (cpm) of noble gases emanating from the Unit 1 main vent stack (Control 4.11.2.1.2, Table 4.11-2)

(3) alarm (via 1-RI-5415) prior to exceeding the site-boundary, noble-gas, total-body-dose-rate limit of 500 mr/yr (per Control 3.11.2.1.a)

(4) alarm (via 1-RIC-5415) prior to exceeding the site-boundary, noble-gas, skin-dose-rate limit of 3000 mr/yr (per Control 3.11.2.1.a)

---

[1] This (radiation element) monitors noble gases. Other radiation elements monitor particulates in this waste stream.

d) **OPERABILITY** of 1-RE-5415

(1) This monitor shall be operable (or have **OPERABILITY**) when it is capable of performing its specified function(s).

(2) The functions of 1-RE-5415 are listed in section (c) above.

e) Monitors equivalent to 1-RE-5415

(1) The Wide Range Gas Monitor (i.e., 1-RE-5416) has the capability of providing the measurement and alarm functions of 1-RE-5415 during times when 1-RE-5415 is declared inoperable.

(2) 1-RE-5415 provides redundant monitoring [for 1-RE-5416] at the low end of the concentration ranges (UFSAR 11.2.3.2.12).

(3) In the event 1-RE-5415 is inoperable or otherwise unavailable, 1-RE-5416 may fulfill the measuring, indicating, and alarming functions normally provided by 1-RE-5415.

(4) The absence of a radiation element dedicated to measuring the particulate activity in the Wide Range Gas Monitor does not preclude the use of 1-RE-5416 as a backup for 1-RE-5415. This is mentioned only as a basis for excluding 1/2-RE-5414 from the setpoint controls of Control 3.3.3.9 (see "Functions of 1-RE-5414" earlier in this section).

f) Radiological effluent controls for 1-RE-5415

(1) Control 3.3.3.9 states that releases via the plant vent stack may continue if any one of the following three conditions are satisfied

(a) 1-RE-5415 is operable AND the alarm setpoint for 1-RI-5415 is set to ensure the annual dose rates due to noble gases at the **SITE BOUNDARY** are less than 500 mr/yr to the total body and are less than 3000 mr/yr to the skin (per Control 3.11.2.1.a), or

(b) an "equivalent monitor" (see section (e) above) is operable AND the alarm setpoint for the "equivalent monitor" is set to ensure annual dose rates due to noble gases at the **SITE BOUNDARY** are less than 500 mr/yr to the total body and are less than 3000 mr/yr to the skin (per Control 3.11.2.1.a), or

(c) grab samples are obtained and analyzed for gross activity at least once per 24 hours in accordance with Controls 3.11.2.1.a, 4.11.2.1.1, and 4.11.2.1.2 (per Control 4.3.3.9, Table 3.3-12, **ACTION** 37).

(2) Control 3.11.2.1.b (i.e., dose rates due to iodines and particulates at the **SITE BOUNDARY**) is not applicable to noble gas detector or to the setpoints related to the noble gas detector 1-RE-5415. As a result, the 1500 my/yr organ dose limit is not included as a radiological effluent control in this section of the ODCM.

g) Surveillances for 1-RE-5415

(1) Control 4.3.3.9 requires demonstrating the **OPERABILITY** of 1-RE-5415 by satisfying the checks, calibrations, and tests listed below:

(a) **CHANNEL CHECK** within the past 24 hours

(b) **SOURCE CHECK** within the past 31 days

(c) **CHANNEL CALIBRATION** within the past 18 months

(d) **CHANNEL FUNCTIONAL TEST** within the past 6 six months

h) Setpoints for 1-RI-5415

(1) Requirements and commitments

(a) The alarm and fixed setpoints ... shall be determined and adjusted in accordance with the methodology and parameters of the ODCM. (Control 3.3.3.9)

(b) The method for calculating fixed or adjustable setpoints shall be provided in the ODCM. (NUREG-0133, 5.1.1)

(2) There are four alarms associated with, or otherwise related to, 1-RE-5415.

(a) 1-RI-5415 fixed high radiation alarm setpoint

(b) 1-RI-5415 adjustable plant computer high radiation alarm setpoint

(c) 1-RI-5415 low radiation alarm setpoint

(d) 1-RI-5415 adjustable plant computer alert setpoint.

(3) In order to simplify the setpoint terminology, eliminate ambiguity, and minimize the possibility of misinterpretation, the ODCM will refer to these setpoints as follows

(a) The 1-RI-5415 fixed high radiation alarm setpoint will be referred to as the fixed setpoint.

(b) The 1-RI-5415 adjustable plant computer high radiation alarm setpoint will be referred to as the adjustable setpoint.

(c) The 1-RI-5415 low radiation alarm setpoint will be referred to as the low setpoint.

(d) The 1-RI-5415 adjustable plant computer alert setpoint will be referred to as the alert setpoint.

(4) Each of these alarm setpoints are described below.

i) The fixed setpoint for 1-RI-5415

(1) General information

(a) The fixed setpoint is not adjusted for each release.

(b) Whenever the fixed setpoint is exceeded, an alarm will be generated.

(c) The current value for the fixed setpoint is specified in the CCNPP Alarm Manual.

(d) The CCNPP Alarm Manual refers to this setpoint as the 1-RI-5415 High Alarm Setpoint.

(e) The fixed setpoint is integral to the Main Vent (Westinghouse) RMS as purchased from the supplier.

(f) The fixed setpoint is administratively controlled by EN-1-100.

(g) The fixed setpoint shall be calculated as described below[1].

(2) Calculating the fixed setpoint for 1-RI-5415

(a) The fixed setpoint for 1-RI-5415 (plant vent stack monitor) shall be calculated in accordance with equation 4G.

THE FIXED SETPOINT FOR 1-RI-5415

$$S_{fix} \leq \{ K_{sf} / [(x/Q) (F_{d1} + F_{d2})] \} \Sigma [(e_i) (A_{iLn})] \qquad \text{Eq. 4G}^2$$

S_{fix} = the fixed setpoint for 1-RI-5415 (counts per minute)

K_{sf} = a constant, actually a safety factor, which is the ratio of the CCNPP activity limit to the MPC limit, L_{MPC}, used in equation 2G (unitless)

The safety factor chosen shall be less than or equal to 1.00. This ensures the fixed setpoint is always less than or equal to the MPC limit, L_{MPC}, used in equation 2G.

1 The alarm and trip setpoints ... shall be determined and adjusted in accordance with the methodology and parameters of the ODCM. (Control 3.3.3.9).

2 Equation 4G has been derived from NUREG-0133, 5.2.1, (the 500 mr/yr equation).

A safety factor of 1.00 will yield a fixed setpoint which corresponds to the MPC limit, L_{MPC}, in equation 2G.

A safety factor of 0.500 will yield a fixed setpoint which corresponds to one-half the MPC limit, L_{MPC}, in equation 2G.

It is recommended that a safety factor of 1.0 be used for calculating the fixed setpoint, however, other values--not to exceed 1.00--may be used as directed by the General Supervisor Chemistry.

The particular value selected for the safety factor is somewhat arbitrary, however a safety factor does provide plant personnel with adequate time to respond to changing plant conditions and to initiate corrective **ACTIONS** so as to minimize the possibility of violating either the 10 CFR 50.72 limit or the Control 3.3.3.9 limits.

The use of a safety factor is consistent with the ALARA philosophy that licensees should make every reasonable effort to maintain radiation exposures, and releases of radioactive materials in effluents to **UNRESTRICTED AREAS**, as low as is reasonably achievable.

The use of a "safety margin" is in accordance with the provisions of NUREG-0133, section 5.1.1, which states that "... the alarm and trip setpoints ... should correspond to a value(s) which represents a safe margin of assurance that the instantaneous gaseous release limit of Control 3.11.2.1(a) will not be exceeded."

This safety margin will prevent minor fluctuations in the nominal plant vent stack flow rates, errors in detector efficiencies, and other statistical aberrations from adversely impacting the calculated fixed setpoint.

x/Q = the highest calculated annual average relative concentration for any area at or beyond the **UNRESTRICTED AREA** boundary (2.2E-6 seconds per cubic meter)

Unit 1 and Unit 2 main vent releases are considered "long-term" releases[1], and as such, the highest historical annual average dispersion factor, (x/Q), is used in the setpoint calculations.

The highest annual average dispersion factor (x/Q) is 2.2E-6 (UFSAR, 2.3.6.3) for purposes of routine, long-term concentrations (e.g., routine noble gas releases).

The maximum annual average on-shore concentrations occur in the southeast sector at a distance of 1300 meters for purposes of routine, long-term concentrations (e.g., routine noble gas releases) (UFSAR, 2.3.6.3).

---

[1] NUREG-0133, 3.3

F_{d1} = the estimated main vent stack flow rate for Unit 1 (cubic meters per second)

Since the main vent stack flow rate will vary depending on the configuration of air dampers and the input gas streams, nominal main vent stack flow rate is used to calculate the fixed setpoint.

Use the nominal Unit 1 main vent stack flow rate listed on Attachment 7.

The main vent stack flow rate shall be determined, in accordance with approved procedures, at least once per 6 months (± 25%). The Test and Equipment Unit shall be responsible for performing this test. The results of the main vent flow rate test shall be evaluated to ensure the main vent flow rates used in the ODCM are an accurate reflection of the true main vent flow rates. The RETS Program Manager is responsible for modifying the (main vent flow rates used in the) ODCM in the event the main vent flow rate for either Unit 1 or Unit 2 has increased to a value which is greater than the maximum discharge flow rates listed on Attachment 7.

F_{d2} = the estimated main vent stack flow rate for unit 2 (cubic meters per second)

Since the main vent stack flow rate will vary depending on the configuration of air dampers and the input gas streams, nominal main vent stack flow rate is used to calculate the fixed setpoint.

Use the nominal Unit 2 main vent stack flow rate listed on Attachment 7.

The main vent stack flow rate shall be determined, in accordance with approved procedures, at least once per 6 months (± 25%). The Test and Equipment Unit shall be responsible for performing this test. The results of the main vent flow rate test shall be evaluated to ensure the main vent flow rates used in the ODCM are an accurate reflection of the true main vent flow rates. The RETS Program Manager is responsible for modifying the (main vent flow rates used in the) ODCM in the event the main vent flow rate for either Unit 1 or Unit 2 has increased to a value which is greater than the maximum discharge flow rates listed on Attachment 7.

e_i = absolute detector efficiency for nuclide, i (cpm/microcuries per milliliter)

The detector efficiency for each radionuclide may be calculated from data collected during calibration of the radiation monitor.

A_{iLn} = the specific activities of radionuclide, i, found in TYPICAL GASEOUS RADWASTE RELEASES (calculated in accordance with 10 CFR 20, Appendix B, Table II, Note 1 as described below; microcuries per milliliter)

Calculate A_{iLn} in accordance with equation 5G.

SPECIFIC ACTIVITY LIMIT FOR NUCLIDE I IN A RADIONUCLIDE MIXTURE

$$A_{ILn} = (f_i)(A_{TLn}) \qquad \text{Eq. 5G}$$

f_i = a fraction which represents the relative activity contribution of noble gas radionuclide i to the total noble gas activity for TYPICAL GASEOUS EFFLUENTS (unitless)

This value may be obtained using the guidance provided on Attachment 5.

A_{TLn} = the sum of the total specific activities of all noble gas radionuclides found in TYPICAL GASEOUS RADWASTE RELEASES (microcuries/cm^3)

Calculate A_{TLn} in accordance with equation 2G.

SPECIFIC ACTIVITY CORRESPONDING TO THE **SITE BOUNDARY** LIMIT

$$\Sigma[(f_i)(A_{TLn})]/A_{iLt} \leq L_{MPC} \qquad \text{Eq. 2G}^1$$

L_{MPC} = the MPC limit

The value chosen for L_{MPC} in this equation is 2. The basis for this limit is 10 CFR 50.72.

It has been shown[2] that, for the radionuclides present in TYPICAL GASEOUS EFFLUENTS from CCNPP, the 2 MPC limit is more restrictive than the limits of Control 3.3.3.9.

It should be noted that by using "2" as the MPC limit (10 CFR 50.72), instead of using the limits of Control 3.11.2.1(a), a safety factor has been incorporated into equation 2G.

The use of 2 MPCs as a safety margin is consistent with the provisions of NUREG-0133, section 5.1.1, which states that, "... in all cases, conservative assumptions may be necessary in establishing these setpoints to account for system variables, ... the variability in release flow, ... and the time lag between alarm and final isolation of radioactive effluents."

An alarm setpoint corresponding to 2 MPCs serves to initiate a determination of whether the "4-hour NRC notification" (specified in 10 CFR 50.72) is required.

The use of a limiting specific activity equivalent to 2 MPCs is consistent with the provisions of 10 CFR 20.

A_{iLt} = the specific activity limit for radionuclide, i, as obtained from 10 CFR 20, Appendix B, Table II, Column 1 (microcuries/cm^3)

For all the radionuclides found in **TYPICAL RADWASTE EFFLUENTS**, use the value from 10 CFR 20, Appendix B, Table II, Column 1. An acceptable alternative is to assume an isotopic mix which results in a more conservative setpoint.

---

1 Equation 2G has been derived from 10 CFR 20, Appendix B, Table II, Note 1.
2 Addendum To Setpoint Calculations For WRGM Monitors 1-RIC-5415 and 2-RIC-5415, R.L. Conatser, December 10, 1991.

(3) The low setpoint for 1-RI-5415

(a) The ODCM does not address the calculations associated with the low setpoint.

(b) The low setpoint is specified in the CCNPP Alarm Manual.

(c) The low setpoint may be used to determine **OPERABILITY** of this monitor (in accordance with the provisions of Control 4.3.3.9, Table 4.3-11, Note 2).

(4) Adjusting the fixed setpoint for 1-RI-5415

(a) If the fixed setpoint calculated in accordance with equation 4G exceeds the maximum range of the monitor, the fixed setpoint shall be adjusted to a value which falls within the normal operating range of the monitor.

(b) The fixed setpoint may be established at values lower than the maximum allowable setpoint, if desired.

(c) A setpoint change should be initiated whenever any of the parameters identified in equation 4G have changed.

(d) The fixed setpoint should not be changed unless one of the following occurs:

i) the relative activity[1] of any radionuclide in TYPICAL GASEOUS EFFLUENTS has changed by greater than 10%, and the new radionuclide mixture yields a fixed setpoint which is 10% (or more) lower than the current fixed setpoint,

ii) the historical maximum annual average atmospheric dispersion factor has changed,

iii) the MPC limit at the **SITE BOUNDARY**, (presently 2 MPCs) has changed,

iv) the estimated Unit 1 main vent stack flow rate or Unit 2 main vent stack flow rate has changed by greater than or equal to 10%[2],

v) the values listed in 10 CFR 20, Table II, column 1 have changed,

vi) the radiation monitor has been recently calibrated, repaired, or otherwise altered, or

---

1 As determined in accordance with Attachment 5.
2 As determined by surveillance test results (e.g., STP-M-462-1, STP-M-462-2).

vii) the monitor is not conservative in its function (see section "Functions of 1/2-RE-5415" earlier in this section).

(e) EN-1-100 contains the administrative controls associated with changing and approving the fixed setpoint.

j) Adjustable setpoint for 1/2-RI-5415

(1) General information

(a) Whenever this monitor is satisfying the minimum channels operable requirement (per Control 3.3.3.9), the adjustable setpoint is calculated and adjusted prior to each release of a WGDT, each containment vent, and each containment purge discharged via the main vent.

(b) The adjustable setpoint is based on the specific activities of the radionuclides present in either the WGDT or the containment building, whichever is applicable. (The radionuclide concentrations are determined by radiochemical analysis in accordance with applicable CHEMISTRY SECTION procedures as required by Control 4.11.2.1.2).

(c) Whenever the adjustable setpoint is exceeded, the WGDT, **PURGE**, or vent discharge via the main vent will be manually suspended.

(d) Refer to the Alarm Manual for a full list of operator **ACTIONS** taken in response to this alarm.

(e) The adjustable setpoint corresponds to the maximum concentration of radionuclides anticipated or expected when discharging a WGDT, a containment vent, or a containment purge via the main vent. For containment purges during outages, system evolutions may cause containment atmosphere activity to increase above what is normally expected for short periods of time.

(f) The value for the adjustable setpoint is recorded on the gaseous release permit in accordance with applicable CHEMISTRY SECTION procedures.

(g) This alarm is not integral to the main vent radiation monitor, as purchased from the supplier.

(h) This alarm is generated by the plant computer which monitors output from 1/2-RI-5415, and provides an alarm to plant operators when the 1/2-RI-5415 adjustable setpoint has been exceeded.

(i) When this monitor is satisfying the minimum channels operable requirement (per Control 3.3.3.9), a value for the adjustable setpoint shall be calculated prior to each release of a WGDT, each containment vent, and each containment purge as shown below.

(2) Calculating the adjustable setpoint for 1/2-RI-5415

(a) The adjustable alarm setpoint is based on the specific activity of the radionuclides in the undiluted gaseous waste (as determined by radiochemical analysis per Control 4.11.2.1.2), and the alarm setpoint is calculated as shown below.

ADJUSTABLE SETPOINT FOR 1/2-RI-5415

May 2004

$$S_{adj} \leq (K_{sf}) [(F_u / F_{dx}) [\Sigma (A_{iu}) (e_i)] + Bkg] \quad \text{Eq. 27G}^1$$

S_{adj} = the adjustable setpoint for 1/2-RI-5415 (cpm)

K_{sf} = a constant, actually a safety factor, which allows for fluctuation in radiation monitor response (unitless)

This safety factor helps ensure the release is not unnecessarily terminated due to (1) electronic anomalies which cause spurious monitor responses, (2) statistical fluctuations in disintegration rates, (3) statistical fluctuations in detector efficiencies, (4) errors associated with sample analysis, (5) errors associated with monitor calibrations[2], and (6) anticipated short term variations in activity (this applicable to containment purges only).

It is recommended that a safety factor of 10 for containment purge releases be used for calculating the adjustable setpoint. However, other values for purge releases -- not to exceed 10 -- may be used as directed by the General Supervisor Chemistry. A safety factor of 1.5 shall be used for all other gaseous releases.

The particular value selected for the safety factor is somewhat arbitrary, however a value less than or equal to 10 does provide plant personnel with adequate time to respond to changing plant conditions and to initiate corrective **ACTIONS** so as to minimize the possibility of violating either the 10 CFR 50.72 limit or the Control 3.3.3.9 limits.

The use of the safety factor is consistent with ALARA philosophy that licensees should make every reasonable effort to maintain radiation exposures, and releases of radioactive materials in effluents to **UNRESTRICTED AREAS**, as low as is reasonably achievable.

The use of a "safety margin" is in accordance with the provisions of NUREG-0133 which states that "... the alarm and trip setpoints ... should correspond to a value(s) which represents a safe margin of assurance that the instantaneous gaseous release limit of Control 3.11.2.1(a) will not be exceeded." (per NUREG-0133, 5.1.1).

This safety margin will prevent minor fluctuations in the nominal plant vent stack flow rates, errors in monitor efficiencies, and other statistical aberrations from adversely impacting the calculated adjustable setpoint. Additionally for a special case of containment purges during outages, the safety factor allows for short term variations in activity created as a result of system evolutions in containment.

---

1 Equation 27G has been derived from NUREG-0133, Addendum, page AA-1.

2 The "analysis errors" and "calibration errors" refer to errors which are within established quality assurance and quality control limits.

F_u = maximum undiluted radwaste flow rate (cubic meters per second)

Values of maximum undiluted radwaste flow rates for various waste streams are tabulated in Attachment 7.

F_{dx} = the estimated main vent stack (diluted gaseous radwaste) flow rate for unit x (cubic meters per second)

Since the main vent stack flow rate will vary depending on the reactor unit, the configuration of air dampers, and the input gas streams, nominal main vent stack flow rate is used to calculate the adjustable setpoint.

Use the nominal main vent stack flow rate, for the appropriate unit, listed on Attachment 7.

The main vent stack flow rate shall be determined, in accordance with approved procedures, at least once per 6 months (± 25%). The Test and Equipment Unit shall be responsible for performing this test. The results of the main vent flow rate test shall be evaluated to ensure the main vent flow rates used in the ODCM are an accurate reflection of the true main vent flow rates. The RETS Program Manager is responsible for modifying the (main vent flow rates used in the) ODCM in the event the main vent flow rate for either Unit 1 or Unit 2 has increased to a value which is greater than the maximum discharge flow rates listed on Attachment 7.

A_{iu} = specific activity of radionuclide, i, in the undiluted waste stream, either the WGDT or containment building as applicable (microcuries per milliliter)

e_i = absolute detector efficiency for nuclide, i (cpm/microcuries per milliliter)

The detector efficiency for each radionuclide may be calculated from data collected during calibration of the radiation monitor.

Bkg = an approximation of the detector background (cpm)

---

(3) Documenting the adjustable setpoint for 1/2-RI-5415

(a) Whenever the adjustable setpoint is calculated, the specific values chosen for each of the variables shall be documented in accordance with approved CHEMISTRY SECTION procedures (e.g., CP-604).

(4) Changing the adjustable setpoint for 1/2-RI-5415

(a) In all cases, the adjustable alarm setpoint shall be set to a value which is less than or equal to the fixed setpoint.

(b) If the adjustable setpoint exceeds the maximum range of the monitor, the setpoint shall be adjusted to a value which falls within the normal operating range of the monitor.

(c) CHEMISTRY SECTION procedures (e.g., CP-604) contain administrative controls associated with calculating and approving an adjustable setpoint.

(d) Whenever this monitor is satisfying the minimum channels operable requirement (per Control 3.3.3.9) the calculated value for the adjustable setpoint shall be entered into the plant computer prior to each release of a WGDT, a containment vent, or a containment purge via the main vent.

k) Alert setpoint for 1/2-RI-5415

(1) General information

(a) The alert setpoint is applicable to containment purges only.

(b) Whenever this monitor is satisfying the minimum channels operable requirement (per Control 3.3.3.9), the alert setpoint is calculated and adjusted prior to each containment purge discharged via the main vent.

(c) The alert setpoint is based on the specific activities of the radionuclides present in the containment building. (The radionuclide concentrations are determined by radiochemical analysis in accordance with applicable CHEMISTRY SECTION procedures as required by Control 4.11.2.1.2).

(d) Whenever the alert setpoint is exceeded, the **PURGE** via the main vent may continue.

(e) The alert setpoint corresponds to a level of activity which indicates additional source term(s) may be present, and as a result, additional notifications and/or actions are required to identify the source and to accurately account for the activity discharged.

(f) The value for the alert setpoint is recorded on the gaseous release permit in accordance with applicable CHEMISTRY SECTION procedures.

(g) This alarm is not integral to the main vent radiation monitor, as purchased from the supplier.

(h) This alarm is generated by the plant computer which monitors output from 1/2-RI-5415, and provides an alarm to plant operators when the 1/2-RI-5415 alert setpoint has been exceeded.

(i) When this monitor is satisfying the minimum channels operable requirement (per Control 3.3.3.9), a value for the alert setpoint shall be calculated prior to each containment purge as shown below.

(2) Calculating the alert setpoint for 1/2-RI-5415

(a) The alert setpoint is based on the specific activity of the radionuclides in the undiluted gaseous waste (as determined by radiochemical analysis per Control 4.11.2.1.2), and the setpoint is calculated as shown below.

ALERT SETPOINT FOR 1/2-RI-5415

$$S_{alert} \leq 1.50\ [(F_u / F_{dx})\ [\Sigma (A_{iu})(e_i)] + Bkg] \qquad \text{Eq. 27G}^1$$

May 2004

S_{alert} = the alert setpoint for 1/2-RI-5415 (cpm)

1.50 = a constant, actually a safety factor, which allows for fluctuation in radiation monitor response (unitless).

This safety factor helps ensure the release is not unnecessarily terminated due to (1) electronic anomalies which cause spurious monitor responses, (2) statistical fluctuations in disintegration rates, (3) statistical fluctuations in detector efficiencies, (4) errors associated with sample analysis, and (5) errors associated with monitor calibrations.[1]

The use of the safety factor is consistent with ALARA philosophy that licensees should make every reasonable effort to maintain radiation exposures, and releases of radioactive materials in effluents to **UNRESTRICTED AREAS**, as low as is reasonably achievable.

The use of a "safety margin" is in accordance with the provisions of NUREG-0133 which states that "... the alarm and trip setpoints ... should correspond to a value(s) which represents a safe margin of assurance that the instantaneous gaseous release limit of Control 3.11.2.1(a) will not be exceeded." (per NUREG-0133, 5.1.1).

This safety margin will prevent minor fluctuations in the nominal plant vent stack flow rates, errors in monitor efficiencies, and other statistical aberrations from adversely impacting the calculated alert setpoint.

F_u = maximum undiluted radwaste flow rate (cubic meters per second)

Values of maximum undiluted radwaste flow rates for various waste streams are tabulated in Attachment 7.

F_{dx} = the estimated main vent stack (diluted gaseous radwaste) flow rate for unit x (cubic meters per second)

Since the main vent stack flow rate will vary depending on the reactor unit, the configuration of air dampers, and the input gas streams, nominal main vent stack flow rate is used to calculate the alert setpoint.

Use the nominal main vent stack flow rate, for the appropriate unit, listed on Attachment 7.

The main vent stack flow rate shall be determined, in accordance with approved procedures, at least once per 6 months (± 25%). The Test and Equipment Unit shall be responsible for performing this test. The results of the main vent flow rate test shall be evaluated to ensure the main vent flow rates used in the ODCM are an accurate reflection of the true main vent flow rates. The RETS Program Manager is responsible for modifying the (main vent flow rates used in the) ODCM in the event the main vent flow rate for either Unit 1 or Unit 2 has increased to a value which is greater than the maximum discharge flow rates listed on Attachment 7.

A_{iu} = specific activity of radionuclide, i, in the containment building (microcuries per milliliter)

---

1 Equation 27G has been derived from NUREG-0133, Addendum, page AA-1.

e_i = absolute detector efficiency for nuclide, i (cpm/microcuries per milliliter)

The detector efficiency for each radionuclide may be calculated from data collected during calibration of the radiation monitor.

Bkg = an approximation of the detector background (cpm)

---

(3) Documenting the alert setpoint for 1/2-RI-5415

(a) Whenever the alert setpoint is calculated, the specific values chosen for each of the variables shall be documented in accordance with approved CHEMISTRY SECTION procedures (e.g., CP-604).

(4) Changing the alert setpoint for 1/2-RI-5415

(a) In all cases, the alert setpoint shall be set to a value which is less than or equal to the fixed setpoint.

(b) If the alert setpoint exceeds the maximum range of the monitor, the setpoint shall be adjusted to a value which falls within the normal operating range of the monitor.

(c) CHEMISTRY SECTION procedures (e.g., CP-604) contain administrative controls associated with calculating and approving an alert setpoint.

(d) Whenever this monitor is satisfying the minimum channels operable requirement (per Control 3.3.3.9) the calculated value for the alert setpoint shall be entered into the plant computer prior to each containment purge via the main vent.

l) The low setpoint for 1/2-RI-5415

(1) This alarm is integral to the main vent monitor, as purchased from the supplier.

(2) The current value for the low alarm setpoint is specified in the CCNPP Alarm Manual.

(3) The low setpoint may be used to determine the **OPERABILITY** of this monitor (per Control 4.3.3.9, **CHANNEL FUNCTIONAL TEST**).

(4) The alarm generated by the low setpoint may be used to terminate a release in the event 1/2-RI-5415 fails (i.e., downscale failure or circuit failure) in accordance with Control 4.3.3.9.

(5) The low setpoint calculations are not described in the ODCM.

(6) Changes to the low setpoint are controlled by EN-1-100.

---

[1] The "analysis errors" and "calibration errors" refer to errors which are within established quality assurance and quality control limits.

4. Westinghouse Plant Vent Stack Monitor (2-RE-5415)

   a) All information related to 1-RE-5415 is applicable to the Unit 2 plant vent stack monitor with the following exception(s):

   b) Monitors equivalent to 2-RE-5415

      (1) 2-RE-5416 [the "WRNGM"] has the capability of providing the measurement and alarm functions of 2-RE-5415 during times when 2-RE-5415 is declared inoperable.

      (2) 2-RE-5415 provides redundant monitoring [for 2-RE-5416] at the low end of the concentration ranges (UFSAR 11.2.3.2.12).

5. **Gaseous Radwaste Processing System** Radiation Monitor (0-RE-2191)

   a) General description

      (1) The **GASEOUS RADWASTE PROCESSING SYSTEM** Radiation Monitor (Waste Gas Decay Tank Radiation Monitor) contains 1 radiation element.

      (2) It is a noble gas detector.

      (3) The detector is an in-line GM tube (UFSAR, Table 11-10).

      (4) The radiation element is designated 0-RE-2191.

      (5) The radiation indicators designated 0-RI-2191.

      (6) The units for the radiation indicator are counts per minute.

      (7) The monitor was manufactured by Westinghouse.

   b) Functions of 0-RE-2191

      (1) continuously measure the release rate of noble gases emanating from the waste gas decay tank discharge header (Control 4.11.2.1.2, Table 4.11-2)

      (2) continuously indicate (via 0-RI-2191) the activity (cpm) of noble gases emanating from the waste gas decay tank discharge header (Control 3.3.3.9 **OPERABILITY** requirement)

      (3) alarm (via 1-RI-2191) prior to exceeding the site-boundary, noble-gas, total-body-dose-rate limit of 500 mr/yr (per Control 3.11.2.1.a)

      (4) alarm (via 1-RI-2191) prior to exceeding the site-boundary, noble-gas, skin-dose-rate limit of 3000 mr/yr (per Control 3.11.2.1.a)

   c) **OPERABILITY** of 0-RE-2191

      (1) This monitor shall be operable (or have **OPERABILITY**) when it is capable of performing its specified function(s).

(2) For more information on the function(s) of this monitor, see "Functions of 0-RE-2191" elsewhere in this section of the ODCM.

d) Monitors equivalent to 0-RE-2191

(1) There are no equivalent monitors associated with 0-RE-2191 since there are no other radiation monitors permanently installed in the waste gas discharge header, however, Control 3.3.3.9 defines the plant vent stack monitor as a "BACKUP MONITOR."

(2) 0-RE-2191 is designated the PRIMARY MONITOR for measuring noble gas activity released via the **GASEOUS RADWASTE PROCESSING SYSTEM**.

(3) 1-RE-5415 (or 1-RE-5416) is designated the BACKUP MONITOR if the WGDT is discharged via the Unit 1 main vent.

(4) 2-RE-5415 (or 2-RE-5416) is designated the BACKUP MONITOR if the WGDT is discharged via the Unit 2 main vent.

(5) WGDTs may be discharged through either the Unit 1 or Unit 2 main vent stack.

(6) The BACKUP MONITOR has the capability of ensuring the noble gas activity released from the **GASEOUS RADWASTE PROCESSING SYSTEM**--to the plant vent stack--does not exceed Control 3.11.2.1(a) at the **SITE BOUNDARY** (Control 3.3.3.9).

(7) In the event PRIMARY MONITOR (0-RE-2191) is inoperable or otherwise unavailable, the designated BACKUP MONITOR (either 1-RE-5415, 1-RE-5416, 2-RE-5415, or 2-RE-5416) may fulfill the measuring, indicating, and alarming functions normally provided by the PRIMARY MONITOR as long as plant operators record the BACKUP MONITOR readings every 15 minutes (Control 3.3.3.9, Table 3.3-12, **ACTION** 35a).

e) Radiological effluent controls for 0-RE-2191

(1) Control 3.3.3.9 states that releases via the **GASEOUS RADWASTE PROCESSING SYSTEM** may continue if ANY ONE of the following three conditions are satisfied:

(a) 0-RE-2191 is operable AND the alarm setpoint for 0-RI-2191 is set to ensure the annual dose rates due to noble gases at the **SITE BOUNDARY** are less than 500 mr/yr to the total body and are less than 3000 mr/yr to the skin (per Control 3.11.2.1.a), or

(b) One "BACKUP MONITOR" (see section (e) above) is operable; AND the "BACKUP MONITOR" readings are recorded every 15 minutes during the release; AND the alarm setpoint for the "BACKUP MONITOR" is set to ensure the annual dose rates due to noble gases at the **SITE BOUNDARY** are less than 500 mr/yr to the total body and are less than 3000 mr/yr to the skin (per Control 3.11.2.1.a), or

(c) All three activities described below are completed prior to the release:

i) at least two independent samples of the waste gas decay tank's contents are analyzed, and

ii) at least two technically qualified members of the Facility Staff independently verify the release rate calculations, and

iii) two qualified operators verify the discharge valve lineup.

f) Surveillances for 0-RE-2191

(1) Control 4.3.3.9 requires demonstrating the **OPERABILITY** of 0-RE-2191 by satisfying the checks, calibrations, and tests listed below

(a) **CHANNEL CHECK** prior to each release

(b) **SOURCE CHECK** prior to each release

(c) **CHANNEL CALIBRATION** within the past 18 months

(d) **CHANNEL FUNCTIONAL TEST** within the past 6 six months

g) Setpoints for 0-RI-2191

(1) Requirements and commitments

(a) The alarm and fixed setpoints ... shall be determined and adjusted in accordance with the methodology and parameters of the ODCM. (Control 3.3.3.9)

(b) The method for calculating fixed or adjustable setpoints shall be provided in the ODCM. (NUREG-0133, 5.1.1)

(2) There are three radiation alarm setpoints associated with, or otherwise related to, 0-RE-2191.

(a) 0-RE-2191 fixed high radiation alarm and automatic termination setpoint

(b) 0-RE-2191 adjustable plant computer high radiation alarm and manual termination setpoint

(c) 0-RE-2191 low radiation alarm setpoint

(3) In order to simplify the setpoint terminology, eliminate ambiguity, and minimize the possibility of misinterpretation, the ODCM will refer to these setpoints as follows

(a) The 0-RE-2191 fixed high radiation alarm and automatic termination setpoint will be referred to as the fixed setpoint.

(b) The 0-RE-2191 adjustable plant computer high radiation alarm and manual termination setpoint will be referred to as the adjustable setpoint.

(c) The 0-RE-2191 low radiation alarm setpoint will be referred to as the low setpoint.

(4) Each of these alarm setpoints are described below.

h) Fixed setpoint for 0-RI-2191

(1) General information

(a) The fixed setpoint is not adjusted for each release.

(b) The fixed setpoint is an alarm and termination setpoint.

(c) Whenever the fixed setpoint is exceeded, an alarm will be generated, and the WGDT release will be automatically suspended.

(d) The fixed setpoint corresponds to the maximum concentration of radionuclides allowed (by equation 6G) in gaseous waste discharged from the gaseous radwaste processing system.

(e) The current value for the fixed setpoint is specified in the CCNPP Alarm Manual.

(f) The CCNPP Alarm Manual refers to this setpoint as the 0-RI-2191 High Radiation Alarm Setpoint.

(g) The fixed setpoint is integral to the waste gas discharge monitor, as purchased from the supplier.

(h) The fixed setpoint is administratively controlled by EN-1-100.

(i) The fixed setpoint shall be calculated as described below[1].

---

[1] The alarm and trip setpoints ... shall be determined and adjusted in accordance with the methodology and parameters of the ODCM. (Control 3.3.3.9).

(2) Calculating the fixed setpoint for 0-RI-2191

(a) The fixed setpoint for 0-RI-2191 (waste gas discharge monitor) shall be calculated as described below:

FIXED SETPOINT FOR 0-RI-2191

$$S_{fix} \leq K_{sf} \{\{1/[(x/Q)(F_u)]\} \Sigma [(e_i)(A_{iLn})] + Bkg\} \quad \text{Eq. 6G}^1$$

Where,

K_{sf} = a constant, actually a safety factor, which is the ratio of the CCNPP activity limit to the MPC limit, L_{MPC}, used in equation 2G (unitless)

The safety factor chosen shall be less than or equal to 1.00. This ensures the fixed setpoint is always less than or equal to the MPC limit, L_{MPC}, used in equation 2G.

A safety factor of 1.00 is used for calculating the fixed setpoint.

By setting the safety factor to 1, the safety factor is disabled.

Although it may appear that if this safety factor is set to 1.0, no safety margin exists, in actuality, another margin of safety has been incorporated into equation 2G (see definition of L_{MPC}).

A safety factor of 1.00 will yield a fixed setpoint which corresponds to the MPC limit, L_{MPC}, in equation 2G.

A safety factor of 0.500 will yield a fixed setpoint which corresponds to one-half the MPC limit, L_{MPC}, in equation 2G.

Other values of safety factors--not to exceed 1.00--may be used for calculating the fixed setpoint as directed by the General Supervisor Chemistry.

The particular value selected for the safety factor is somewhat arbitrary, however a value less than or equal to 1.0 does provide plant personnel with adequate time to respond to changing plant conditions and to initiate corrective **ACTIONS** so as to minimize the possibility of violating either the 10 CFR 50.72 limit or the Control 3.3.3.9 limits.

The use of a safety factor is consistent with the ALARA philosophy that licensees should make every reasonable effort to maintain radiation exposures, and releases of radioactive materials in effluents to **UNRESTRICTED AREAS**, as low as is reasonably achievable.

The use of a "safety margin" is in accordance with the provisions of NUREG-0133 which states that "... the alarm and trip setpoints ... should correspond to a value(s) which represents a safe margin of assurance that the instantaneous gaseous release limit of Control 3.11.2.1(a) will not be exceeded." (per NUREG-0133, 5.1.1).

This safety margin will prevent minor fluctuations in the nominal WGDT discharge flow rates, errors in detector efficiencies, and other statistical aberrations from adversely impacting the calculated fixed setpoint.

S_{fix} = the fixed setpoint for 0-RI-2191 (cpm)

---

[1] Equation 6G has been derived from NUREG-0133, 5.2.1, (the 500 mr/yr equation).

x/Q = the highest calculated historical annual average relative concentration for any area at or beyond the **UNRESTRICTED AREA** boundary (2.2E-6 seconds per cubic meter)

A waste gas decay tank release via the Unit 1 or Unit 2 main vent is considered a "long-term" release[1], and as such, the highest historical annual average dispersion factor, (x/Q), is used in the setpoint calculations.

The highest annual average dispersion factor (x/Q) is 2.2E-6 (UFSAR, 2.3.6.3) for purposes of routine, long-term concentrations (e.g., routine noble gas releases).

The maximum annual average on-shore concentrations occur in the southeast sector at a distance of 1300 meters for purposes of routine, long-term concentrations (e.g., routine noble gas releases) (UFSAR, 2.3.6.3).

F_u = the estimated maximum flow rate of undiluted gases through the waste gas discharge header (cubic meters per second)

Since WGDT pressure is the motive force for discharge of a WGDT, the waste gas flow rate will continually decrease as the release progresses (i.e., as tank pressure is decreased).

Use the estimated maximum WGDT discharge flow rate, listed on Attachment 7, to calculate the fixed setpoint.

e_i = absolute detector efficiency for nuclide, i (cpm/microcuries per milliliter)

The detector efficiency for each radionuclide may be calculated from data collected during calibration of the radiation monitor.

A_{iLn} = the specific activities of radionuclide, i, found in TYPICAL GASEOUS RADWASTE RELEASES (calculated in accordance with 10 CFR 20, Appendix B, Table II, Note 1 as described below; microcuries per milliliter)

Calculate A_{iLn} in accordance with equation 5G.

SPECIFIC ACTIVITY LIMIT FOR NUCLIDE I IN A RADIONUCLIDE MIXTURE

$$A_{iLn} = (f_i)(A_{TLn}) \qquad \text{Eq. 5G}$$

f_i = a fraction which represents the relative activity contribution of noble gas radionuclide i to the total noble gas activity for TYPICAL GASEOUS EFFLUENTS (unitless)

This value may be obtained using the guidance provided on Attachment 5.

A_{TLn} = the sum of the total specific activities of all noble gas radionuclides found in TYPICAL GASEOUS RADWASTE RELEASES (microcuries/cm^3).

Calculate A_{TLn} in accordance with equation 2G.

[1] NUREG-0133, 3.3

SPECIFIC ACTIVITY OF NOBLE GASES AT THE **SITE BOUNDARY**

$$\Sigma [(f_i) (A_{TLn})] / A_{iLt} \leq L_{MPC} \qquad \text{Eq. 2G}^1$$

Where,

L_{MPC} = the MPC limit

The value chosen for L_{MPC} in this equation is 2. The basis for this limit is 10 CFR 50.72.

It has been shown[1] that, for the radionuclides present in TYPICAL GASEOUS EFFLUENTS from CCNPP, the 2 MPC limit is more restrictive than the limits of Control 3.3.3.9.

It should be noted that by using "2" as the MPC limit (10 CFR 50.72), instead of using the limits of Control 3.11.2.1(a), a safety factor has been incorporated into equation 2G.

The use of 2 MPCs as a safety margin is consistent with the provisions of NUREG-0133, section 5.1.1, which states that, "... in all cases, conservative assumptions may be necessary in establishing these setpoints to account for system variables, ... the variability in release flow, ... and the time lag between alarm and final isolation of radioactive effluents." (NUREG-0133, 5.1.1)

An alarm setpoint corresponding to 2 MPCs serves to initiate a determination of whether the "4-hour NRC notification" (specified in 10 CFR 50.72) is required.

A_{iLt} = the specific activity limit for radionuclide, i, as obtained from 10 CFR 20, Appendix B, Table II, Column 1 (microcuries/cm^3)

For all the radionuclides found in **TYPICAL RADWASTE EFFLUENTS**, use the value from 10 CFR 20, Appendix B, Table II, Column 1. An acceptable alternative is to ensure an isotopic mix which results in a more conservative setpoint.

Bkg = an approximation of the detector background prior to initiating the gaseous release (cpm)

Instead of using an approximation of the detector background, a value of 0 cpm may be used as the detector background if so desired.

---

(3) Documenting the fixed setpoint for 0-RI-2191

(a) Whenever the fixed setpoint is calculated, the specific values chosen for each of the variables shall be documented in accordance with EN-1-100.

(4) Changing the fixed setpoint for 0-RI-2191

(a) If the fixed setpoint calculated in accordance with equation 6G exceeds the maximum range of the monitor, the fixed setpoint shall be adjusted to a value which falls within the normal operating range of the monitor.

---

1 Equation 2G has been derived from 10 CFR 20, Appendix B, Table II, Note 1.

(b) The fixed setpoint may be established at values lower than the maximum allowable setpoint, if desired.

(c) A setpoint change should be initiated whenever any of the parameters identified in equations 2G, 5G, or 6G have changed.

(d) The fixed setpoint should not be changed unless one of the following occurs:

i) the relative activity[2] of any radionuclide in TYPICAL GASEOUS EFFLUENTS has changed by greater than 10%, and the new radionuclide mixture yields a fixed setpoint which is 10% (or more) lower than the current fixed setpoint,

ii) the historical maximum annual average atmospheric dispersion factor has changed,

iii) the MPC limit at the **SITE BOUNDARY**, (presently 2 MPCs) has changed,

iv) values listed in 10 CFR 20, Table II, column 1 have changed,

v) the radiation monitor has been recently calibrated, repaired, or otherwise altered, or

vi) the monitor is not conservative in its function (see section "Functions of 0-RE-2191" earlier in this section).

(e) EN-1-100 contains the administrative controls associated with changing and approving fixed setpoint.

---

1 Addendum To Setpoint Calculations For WRGM Monitors 1-RIC-5415 and 2-RIC-5415, R.L. Conatser, December 10, 1991.

2 As determined in accordance with Attachment 5.

i) Adjustable setpoint for 0-RI-2191

(1) General information

(a) Whenever this radiation monitor is operable, the adjustable setpoint is calculated and adjusted prior to each release of a WGDT.

(b) The adjustable setpoint is based on the specific activities of the radionuclides present in the WGDT. (The radionuclide concentrations are determined by radiochemical analysis in accordance with applicable CHEMISTRY SECTION procedures as required by Control 4.11.2.1.2).

(c) Whenever the adjustable setpoint is exceeded, the WGDT discharge will be manually suspended.

(d) Refer to the radwaste Alarm Manual for a full list of operator **ACTIONS** taken in response to this alarm.

(e) The adjustable setpoint corresponds to the maximum concentration of radionuclides anticipated or expected when discharging a WGDT.

(f) The value for the adjustable setpoint is recorded on the gaseous release permit in accordance with applicable CHEMISTRY SECTION procedures.

(g) This alarm is not integral to the **GASEOUS RADWASTE PROCESSING SYSTEM** radiation monitor, as purchased from the supplier.

(h) This alarm is generated by the plant computer which monitors output from 0-RI-2191, and provides an alarm to plant operators when the 0-RI-2191 adjustable setpoint has been exceeded.

(i) When this monitor is operable, a value for the adjustable setpoint shall be calculated prior to each release of a WGDT as shown below.

(2) Calculating the adjustable setpoint for 0-RI-2191

(a) The adjustable setpoint is based on the specific activity of the radionuclides in the undiluted gaseous waste (as determined by radiochemical analysis per Control 4.11.2.1.2), and is calculated as shown below.

ADJUSTABLE SETPOINT FOR 0-RI-2191

$$S_{adj} \leq 1.50 [\Sigma (A_{iu})(e_i) + Bkg] \quad \text{Eq. 28G}^1$$

S_{adj} = the adjustable setpoint for 0-RI-2191 (cpm)

1.50 = a constant, actually a safety factor, which allows for fluctuation in radiation monitor response (unitless)

This safety factor helps ensure the release is not unnecessarily terminated due to (1) electronic anomalies which cause spurious monitor responses, (2) statistical fluctuations in disintegration rates, (3) statistical fluctuations in detector efficiencies, (4) errors associated with sample analysis, and (5) errors associated with monitor calibrations.[2]

F_u = maximum allowed undiluted radwaste flow rate (cubic meters per second)

The maximum allowed undiluted radwaste flow rate for a WGDT is tabulated in Attachment 7.

A_{iu} = specific activity of radionuclide, i, in the undiluted waste stream (microcuries per milliliter)

e_i = absolute detector efficiency for nuclide, i (cpm/microcuries per milliliter)

The detector efficiency for each radionuclide may be calculated from data collected during calibration of the radiation monitor.

Bkg = an approximation of the detector background (cpm)

---

(3) Documenting the adjustable setpoint for 0-RI-2191

(a) Whenever the adjustable setpoint is calculated, the specific values chosen for each of the variables shall be documented in accordance with approved CHEMISTRY SECTION procedures (e.g., CP-604).

(4) Changing the adjustable setpoint for 0-RI-2191

(a) In all cases, the adjustable setpoint shall be set to a value which is less than or equal to the fixed setpoint.

(b) If the adjustable setpoint exceeds the maximum range of the monitor, the setpoint shall be adjusted to a value which falls within the normal operating range of the monitor.

(c) CHEMISTRY SECTION procedures (e.g., CP-604) contain administrative controls associated with calculating and approving an adjustable setpoint.

(d) Whenever this monitor is operable, the calculated value for the adjustable setpoint shall be entered into the plant computer prior to each release of a WGDT via the main vent.

---

1 Equation 28G has been derived from NUREG-0133, Addendum, page AA-1.

2 The "analysis errors" and "calibration errors" refer to errors which are within established quality assurance and quality control limits.

j) The low setpoint for 0-RI-2191

(1) This alarm is integral to the main vent monitor, as purchased from the supplier.

(2) The current value for the low setpoint is specified in the CCNPP Alarm Manual.

(3) The low setpoint may be used to determine the **OPERABILITY** of this monitor (per Control 4.3.3.9, **CHANNEL FUNCTIONAL TEST**).

(4) The alarm generated by the low setpoint may be used to terminate a release in the event 0-RI-2191 fails (i.e., downscale failure or circuit failure) in accordance with Control 4.3.3.9.

(5) The low setpoint calculations are not described in the ODCM.

(6) Changes to the low setpoint are controlled by EN-1-100.

ANNUAL TOTAL BODY DOSE RATE DUE TO NOBLE GASES IN GASEOUS EFFLUENTS

1. Introduction

a) 10 CFR 20.1301 specifies dose rate limits associated with the release of radioactive materials to **UNRESTRICTED AREAS**.

b) Radiological effluent controls have been established to implement the requirements of 10 CFR 20.1301. The 10 CFR 50 Appendix I, Design Objectives for ALARA Radioactive Effluents, upon which these calculations are based, are more restrictive than the public dose limits of 10 CFR 20.1301.

c) These radiological effluent controls are described below.

2. Radiological Effluent Controls

a) The annual total body dose rate, due to noble gases in gaseous waste discharged to **UNRESTRICTED AREAS**, shall be less than 500 mr/yr (per Control 3.11.2.1).

b) The routine surveillances which are performed to verify compliance with this radiological effluent control is described below.

3. Surveillance Requirement

a) The annual total body dose rate, due to noble gases in all gaseous effluents discharged from the site, shall be determined in accordance with equation 7G (per Control 4.11.2.1.1).

b) The results of the radioactive gaseous waste sampling and analysis program (required by Control 4.11.2.1.2, and implemented by various CCNPP CHEMISTRY SECTION procedures) are used to calculate the annual total body dose rate due to noble gases in gaseous effluents.

c) The plant group(s) responsible for performing the required surveillances are identified below.

4. Responsible Plant Organization(s)

a) The CHEMISTRY SECTION is responsible for calculating the annual total body dose rate due to noble gases in gaseous effluents.

b) The CCNPP CHEMISTRY SECTION calculates the annual total body dose rate whenever the appropriate initiating conditions are present.

c) These initiating conditions are contained in the following section.

5. Initiating Conditions

a) The annual total body dose rate due to noble gases in gaseous effluents is calculated for each release of a WGDT.

b) The annual total body dose rate due to noble gases in gaseous effluents is calculated for each vent of a containment building.

c) The annual total body dose rate due to noble gases in gaseous effluents is calculated for each **PURGE** of a containment building.

d) The annual total body dose rate due to noble gases in gaseous effluents is calculated at least weekly[1] for CONTINUOUS discharges from plant vent stacks.

e) The annual total body dose rate due to noble gases in gaseous effluents is calculated for each discharge of combustion products resulting from the burning of contaminated oil.

f) The annual total body dose rate due to noble gases in gaseous effluents is calculated for each **ABNORMAL AND/OR UNANTICIPATED RADIOACTIVE GAS RELEASE**.

g) Whenever the correct initiating conditions are present, the annual total body dose rates shall be calculated as described below.

6. Calculation Methodology

a) The annual total body dose rate, at the **SITE BOUNDARY**, due to noble gases in gaseous effluents released to **UNRESTRICTED AREAS** shall be calculated in accordance with equation 7G.[2]

---

1 The frequency is controlled by the implementing procedure, and is based on plant conditions. Under no conditions shall the frequency be less than once per month (Control 4.11.2.1.1 or 4.11.2.1.2, Table 4.11-2).

2 The alarm and trip setpoints ... shall be determined and adjusted in accordance with the methodology and parameters of the ODCM. (Control 3.3.3.9).

ANNUAL TOTAL BODY DOSE RATE DUE TO NOBLE GASES IN ALL GAS RELEASES

$$D_{t0} = \Sigma D_{tr} \qquad \text{Eq. 7G}$$

D_{t0} = the site-boundary annual total body dose rate due to noble gases in all gaseous effluents discharged (simultaneously) from the site (mrem/year)

D_{tr} = the site-boundary annual total body dose rate due to noble gases in release, r (mrem/year)

Sum for all releases, r, which are discharged simultaneously.

An example of a SIMULTANEOUS RELEASE would include the release of noble gas radionuclides from the Unit 1 plant vent stack while also discharging noble gases from the Unit 2 plant vent stack.

An example of a SIMULTANEOUS RELEASE would include the release of noble gas radionuclides from the Unit 1 plant vent stack while also discharging a waste gas decay tank.

Calculate the values of D_{tr} for each SIMULTANEOUS RELEASE as shown below.

---

b) At CCNPP, two methods exist for calculating D_{tr} (i.e., annual total body dose rate at the **SITE BOUNDARY** due to noble gases contained in a gaseous radwaste release, r, discharged from the site).

(1) The rigorous method shall be used IF a computer system and the appropriate software are available.

(2) The simplified method may be used IF a computer system and the appropriate software are NOT available.

(3) These methods, as well as additional supporting information, are presented in the following sections.

c) Rigorous method

(1) Solution of the following equation may prove too rigorous for routine use unless a computer system and appropriate software are available.

(2) If a computer system and the appropriate software are available, the annual total body dose rate due to noble gases in gaseous effluents discharged from the site to **UNRESTRICTED AREAS** shall be calculated in accordance with equation 8G.

ANNUAL TOTAL BODY DOSE RATE DUE TO NOBLE GASES IN GAS RELEASE, r (RIGOROUS METHOD)

$$D_{tr} = (x/Q)\,[\Sigma\,(K_i)\,(Q_{ir})] \qquad \text{Eq. 8G}^1$$

Where,

x/Q = the highest calculated annual average relative concentration for any area at or beyond the **UNRESTRICTED AREA** boundary (2.2E-6 seconds per cubic meter)

All releases are considered "long-term" releases[2], and as such, the highest historical annual average dispersion factor, (x/Q), is used in the dose rate calculations.

The highest annual average dispersion factor (x/Q) is 2.2E-6 (UFSAR, 2.3.6.3) for purposes of routine, long-term concentrations (e.g., routine noble gas releases) (UFSAR, 2.3.6.3)

The maximum annual average on-shore concentrations occur in the southeast sector at a distance of 1300 meters for purposes of routine, long-term concentrations (e.g., routine noble gas releases) (UFSAR, 2.3.6.3)

K_i = the total body dose factor due to gamma emissions for each identified noble gas radionuclide, i (mrem/yr per microcurie/cubic meter)

The total-body dose factors for gamma rays from noble gas radionuclides were obtained from Regulatory Guide 1.109, Appendix B, Table B-1.

The total-body dose factors for various noble gas radionuclides are tabulated in Attachment 10.

Q_{ir} = the release rate of noble gas radionuclide, i, in (simultaneous) gaseous release, r (microcuries/second).

Calculate the values of Q_{ir} for each SIMULTANEOUS RELEASE as shown below.

---

1 Equations 8G has been derived from NUREG-0133, 5.2.1, and Regulatory Guide 1.109 (Appendix B, Equation B-8 and Section C.2.e).

2 NUREG-0133, 3.3

INSTANTANEOUS RELEASE RATE OF NOBLE GAS NUCLIDE i IN GASEOUS RELEASE r

$$Q_{ir} = (A_{ir})(F_r)(c') \qquad \text{Eq. 9G}$$

Where,

A_{ir} = the specific activity of noble gas radionuclide, i, in (simultaneous) release, r (microcuries/cubic centimeter)

F_r = the discharge flow rate for (simultaneous) release, r (cubic meters per second)

If the discharge flow rate is unknown (e.g., the release has not been conducted), the "Maximum Discharge Flow Rate" listed on Attachments 7 or 8 may be used to calculate the annual total body dose rate.

Whenever possible, the actual discharge flow rate determined from actual release conditions (e.g., initial pressure, volume, and temperature of a WGDT along with final pressure and temperature) shall be used in equation 9G.

Additional guidance for calculating discharge flow rates may be contained in approved CHEMISTRY SECTION procedures.

c' = a conversion constant (1E6 cubic centimeters per cubic meter)

---

d) Simplified method

(1) If a computer system and the appropriate software are NOT available, the annual total body dose rate due to noble gases in gaseous effluents discharged from the site to **UNRESTRICTED AREAS** may be calculated in accordance with equation 10G.

ANNUAL TOTAL BODY DOSE RATE DUE TO NOBLE GASES IN GAS RELEASE, r (SIMPLIFIED METHOD)

$$D_{tr} = [(x/Q)(K_{avg})/(K_{sf})]\sum Q_{ir} \qquad \text{Eq. 10G}^{1}$$

Where,

x/Q = the highest calculated annual average relative concentration for any area at or beyond the **UNRESTRICTED AREA** boundary (2.2E-6 seconds per cubic meter)

All releases are considered "long-term" releases[2], and as such, the highest historical annual average dispersion factor, (x/Q), is used in the dose rate calculations.

The highest annual average dispersion factor (x/Q) is 2.2E-6 (UFSAR, 2.3.6.3) for purposes of routine, long-term concentrations (e.g., routine noble gas releases) (UFSAR, 2.3.6.3)

---

1 Equations 10G has been derived from NUREG-0133, 5.2.1, and historical, site-specific data.
2 NUREG-0133, 3.3

The maximum annual average on-shore concentrations occur in the southeast sector at a distance of 1300 meters for purposes of routine, long-term concentrations (e.g., routine noble gas releases) (UFSAR, 2.3.6.3)

K_{avg} = the empirically derived, site specific, average, total body, dose factor due to gamma emissions from TYPICAL GASEOUS EFFLUENTS (mrem/yr per microcurie/cubic meter)

A site-specific, average, gamma total body dose factor for TYPICAL GASEOUS EFFLUENTS has been calculated from historical data.

The calculation of this site-specific, average, gamma air dose factor is presented on Attachment 11 (use section 3.4.5 of the old ODCM.)

Refer to the table on Attachment 11 for the current value for the empirically derived, site specific, average gamma total body dose factor.

K_{sf} = a constant, actually a safety factor, which is the ratio of the CCNPP annual total body dose rate limit to the annual total body dose rate limit of Control 3.11.2.1, (unitless)

The safety factor chosen shall be less than or equal to 1.00. This ensures the annual total body dose rate is always less than or equal to the annual total body dose rate limit of Control 3.11.2.1.

A safety factor of 1.00 will yield an annual total body dose rate which corresponds to the annual total body dose rate limit of Control 3.11.2.1.

A safety factor of 0.500 will yield an annual total body dose rate which corresponds to one-half the annual total body dose rate limit of Control 3.11.2.1.

It is recommended that a safety factor of 1.0 be used for calculating the annual total body dose rate, however, other values--not to exceed 1.00--may be used as directed by the General Supervisor Chemistry.

The particular value selected for the safety factor is somewhat arbitrary, however a safety factor does provide plant personnel with a degree of administrative control over the use of simplified equations for generating radioactive gaseous release permits. This administrative control is designed to minimize the possibility of violating Control 3.11.2.1 when simplifying assumptions are used.

The use of a safety factor is consistent with the ALARA philosophy that licensees should make every reasonable effort to maintain radiation exposures, and releases of radioactive materials in effluents to **UNRESTRICTED AREAS**, as low as is reasonably achievable.

This safety factor has been included in equation 10G to account for any potential nonconservatism associated with applying the empirically derived total body gamma dose factor, K_{avg}, to all radionuclides identified in the gaseous release. Such nonconservatism could conceivable be present whenever radionuclides having a total body gamma dose factor greater than K_{avg} are present in a gaseous release.

Q_{ir} = the release rate of noble gas radionuclide, i, in (simultaneous) gaseous release, r (microcuries/second)

Calculate the values of Q_{ir} for each SIMULTANEOUS RELEASE in accordance with equation 9G.

INSTANTANEOUS RELEASE RATE OF NOBLE GAS NUCLIDE i IN GASEOUS RELEASE r

$$Q_{ir} = (A_{ir})(F_r)(c') \qquad \text{Eq. 9G}$$

Where,

A_{ir} = the specific activity of noble gas radionuclide, i, in (simultaneous) release, r (microcuries/cubic centimeter)

F_r = the discharge flow rate for (simultaneous) release, r (cubic meters per second)

If the discharge flow rate is unknown (e.g., the release has not been conducted), the "Maximum Discharge Flow Rate" listed on Attachments 7 or 8 may be used to calculate the annual total body dose rate.

Whenever possible, the actual discharge flow rate determined from actual release conditions (e.g., initial pressure, volume, and temperature of a WGDT along with final pressure and temperature) shall be used in equation 9G.

Additional guidance for calculating discharge flow rates may be contained in approved CHEMISTRY SECTION procedures.

c' = a conversion constant (1E6 cubic centimeters per cubic meter)

---

e) Radiation monitoring system algorithms

(1) The plant vent stack radiation monitoring systems display values which are proportional to the annual total body dose rates due to noble gases emanating from the plant vent stacks.

(2) The values displayed by the plant vent stack radiation monitoring systems are not used for the purpose of effluent accountability per se, but the values displayed can provide a gross approximation of annual total body dose rate (see Control 3.3.3.9).

(3) The Westinghouse Main Vent Noble Gas Monitor, 1/2-RE-5415, is an analog system and does not employ instrument algorithm to determine noble gas release rates.

(a) It is possible to approximate the noble gas release rates for the Unit 1 and Unit 2 main vents based on output from 1/2-RI-5415.

(b) These calculations are described elsewhere in the ODCM. (See equation 4G in the section "Calculating the Fixed Setpoint for 1/2-RI-5415.")

(4) The Sorrento WRNGM, 1/2-RE-5416, is a digital radiation monitoring system which employs an instrument algorithm to determine noble release rates (microcuries per second).

(a) It is possible to approximate the noble gas release rates for the Unit 1 and Unit 2 main vents based on output from 1/2-RIC-5415.

(b) These calculations are described elsewhere in the ODCM. (See equation 1G in the section "Calculating the Fixed High-High Alarm Setpoint for 1/2-RIC-5415.")

(c) The instrument algorithms and the (data base) values accessed by the instrument algorithms are controlled by EN-1-100.

f) Once the calculations above have been completed, the calculation results are compared to the applicable limits and corrective **ACTIONS** are initiated as described below.

7. Corrective actions

a) CHEMISTRY SECTION surveillance procedures shall contain/and or reference administrative and/or Control limits for annual total body dose rates for gaseous effluents and shall specify corrective actions to be initiated when these limits are exceeded.

b) Refer to Control 3.11.2.1 for actions to be taken in the event the calculated annual total body dose rate due to noble gases in gaseous effluents exceeds 500 mr/yr.

ANNUAL SKIN DOSE RATE DUE TO NOBLE GASES IN GASEOUS EFFLUENTS

1. Introduction

   a) 10 CFR 20.1301 specifies dose rate limits associated with the release of radioactive materials to **UNRESTRICTED AREAS**.

   b) Radiological effluent controls have been established to implement the requirements of 10 CFR 20.1301.

   c) These radiological effluent controls are described below.

2. Radiological Effluent Controls

   a) The annual skin dose rate, due to noble gases in gaseous waste discharged to **UNRESTRICTED AREAS**, shall be less than 3000 mr/yr (per Control 3.11.2.1).

   b) The routine surveillances which are performed to verify compliance with this radiological effluent controls are described below.

3. Surveillance Requirement

   a) The annual skin dose rate at the **SITE BOUNDARY**, due to noble gases in all gaseous effluents discharged from the site, shall be determined in accordance with equation 11G (per Control 4.11.2.1.1).

   b) The results of the radioactive gaseous waste sampling and analysis program (required by Control 4.11.2.1.2, and implemented by various CCNPP CHEMISTRY SECTION procedures) are used to calculate the annual skin dose rate due to noble gases in gaseous effluents.

   c) The plant group(s) responsible for performing the required surveillances are identified below.

4. Responsible Plant Organization(s)

   a) The CHEMISTRY SECTION is responsible for calculating the annual skin dose rate due to noble gases in gaseous effluents.

   b) The CCNPP CHEMISTRY SECTION calculates the annual skin dose rate whenever the appropriate initiating conditions are present.

   c) These initiating conditions are contained in the following section.

5. Initiating Conditions

   a) The annual skin dose rate due to noble gases in all gaseous effluents discharged from the site is calculated for each release of a WGDT.

   b) The annual skin dose rate due to noble gases in all gaseous effluents discharged from the site is calculated for each vent of a containment building.

c) The annual skin dose rate due to noble gases in all gaseous effluents discharged from the site is calculated for each **PURGE** of a containment building.

d) The annual skin dose rate due to noble gases in all gaseous effluents discharged from the site is calculated at least weekly[1] for CONTINUOUS discharges from plant vent stacks.

e) The annual skin dose rate due to noble gases in all gaseous effluents discharged from the site is calculated for each discharge of combustion products resulting from the burning of contaminated oil.

f) The annual skin dose rate due to noble gases in all gaseous effluents discharged from the site is calculated for each **ABNORMAL AND/OR UNANTICIPATED RADIOACTIVE GAS RELEASE**.

g) Whenever the correct initiating conditions are present, the annual skin dose rates shall be calculated as described below.

6. Calculation Methodology

a) The annual skin dose rate, at the **SITE BOUNDARY**, due to noble gases in all gaseous effluents discharged simultaneously from the site to **UNRESTRICTED AREAS** shall be calculated in accordance with equation 11G.[2]

ANNUAL SKIN DOSE RATE DUE TO NOBLE GASES IN ALL SIMULTANEOUS GAS RELEASES, r

$$D_{s0} = \Sigma D_{sr} \qquad \text{Eq. 11G}$$

D_{s0} = the annual skin dose rate at the **SITE BOUNDARY** due to noble gases in all simultaneous discharges of gaseous radwaste from the site ("Unit 0")

D_{sr} = the annual skin dose rate at the **SITE BOUNDARY** due to noble gases in release, r

Sum for all releases, r, which are discharged simultaneously.

An example of a SIMULTANEOUS RELEASE would include the release of noble gas radionuclides from the Unit 1 plant vent stack while also discharging noble gases from the Unit 2 plant vent stack.

An example of a SIMULTANEOUS RELEASE would include the release of noble gas radionuclides from the Unit 1 plant vent stack while also discharging a waste gas decay tank.

Calculate the values of D_{sr} for each SIMULTANEOUS RELEASE as shown below.

---

1 The frequency is controlled by the implementing procedure and is based on plant conditions. Under no conditions shall the frequency be less than once per month (Control 4.11.2.1.1 or 4.11.2.1.2, Table 4.11-2).

2 The alarm and trip setpoints ... shall be determined and adjusted in accordance with the methodology and parameters of the ODCM. (Control 3.3.3.9).

b) At CCNPP, two methods exist for calculating D_{sr} (i.e., annual total skin dose rate at the **SITE BOUNDARY** due to noble gases contained in a gaseous radwaste release, r, discharged from the site).

(1) The rigorous method shall be used IF a computer system and the appropriate software are available.

(2) The simplified method may be used IF a computer system and the appropriate software are NOT available.

(3) These methods, as well as additional supporting information, are presented in the following sections.

c) Rigorous Method

(1) Solution of the following equation may prove too rigorous for routine use unless a computer system and appropriate software are available.

(2) If a computer system and the appropriate software are available, the annual skin dose rate due to noble gases in gaseous release, r, discharged from the site to **UNRESTRICTED AREAS** shall be calculated in accordance with equation 12G.

ANNUAL SKIN DOSE RATE DUE TO NOBLE GASES IN GAS RELEASE, r
(RIGOROUS METHOD)

$$D_{sr} = (x/Q)\,\Sigma\{[L_i + (1.1)(M_i)](Q_{ir})\} \qquad \text{Eq. 12G}^1$$

Where,

x/Q = the highest calculated annual average relative concentration for any area at or beyond the **UNRESTRICTED AREA** boundary (2.2E-6 seconds per cubic meter)

All releases are considered "long-term" releases[1], and as such, the highest historical annual average dispersion factor, (x/Q), is used in the dose rate calculations.

The highest annual average dispersion factor (x/Q) is 2.2E-6 (UFSAR, 2.3.6.3) for purposes of routine, long-term concentrations (e.g., routine noble gas releases) (UFSAR, 2.3.6.3)

The maximum annual average on-shore concentrations occur in the southeast sector at a distance of 1300 meters for purposes of routine, long-term concentrations (e.g., routine noble gas releases) (UFSAR, 2.3.6.3)

L_i = the skin dose factor due to beta emissions for each identified noble gas radionuclide, i (mrem/yr per microcurie/cubic meter)

The beta skin dose factors have been obtained from Regulatory Guide 1.109, Appendix B, Table B-1.

The beta skin dose factors for various noble gas radionuclides are tabulated in Attachment 10.

---

1 Equation 12G has been derived from NUREG-0133, 5.2.1, and Regulatory Guide 1.109 (Appendix B, Equation B-9 and Section C.2.f).

M_i = the air dose factor due to gamma emissions for each identified noble gas radionuclide, i (mrad/yr per microcurie/cubic meter)

The gamma air dose factors have been obtained from Regulatory Guide 1.109, Appendix B, Table B-1.

The gamma air dose factors for various noble gas radionuclides are tabulated in Attachment 10.

1.1 = The conversion constant, 1.1 mrem/mrad, represents the skin dose (1.1 mrem) equivalent to air dose (1.0 mrad), and is used to convert air dose to skin dose.

Q_{ir} = the release rate of noble gas radionuclide, i, in (simultaneous) release, r (microcuries/second).

This value shall be calculated in accordance with equation 9G.

INSTANTANEOUS RELEASE RATE OF NOBLE GAS NUCLIDE i IN GASEOUS RELEASE r

$$Q_{ir} = (A_{ir})(F_r)(c') \qquad \text{Eq. 9G}$$

A_{ir} = the specific activity of noble gas radionuclide, i, in (simultaneous) release, r (microcuries/cubic centimeter)

F_r = the discharge flow rate for (simultaneous) release, r (cubic meters per second)

If the discharge flow rate is unknown (e.g., the release has not been conducted), the "Maximum Discharge Flow Rate" listed on Attachments 7 or 8 may be used to calculate the annual skin dose rate.

Whenever possible, the actual discharge flow rate determined from actual release conditions (e.g., initial pressure, volume, and temperature of a WGDT along with final pressure and temperature) shall be used in equation 9G.

Additional guidance for calculating discharge flow rates may be contained in approved CHEMISTRY SECTION procedures.

c' = a conversion constant (1E6 cubic centimeters per cubic meter)

d) Simplified method

(1) If a computer system and the appropriate software are NOT available, the annual skin dose rate due to noble gases in gaseous effluents discharged from the site to **UNRESTRICTED AREAS** may be calculated in accordance with equation 13G.

[1] NUREG-0133, 3.3

ANNUAL SKIN DOSE RATE DUE TO NOBLE GASES IN GAS RELEASE, r (SIMPLIFIED METHOD)

$$D_{sr} = [(x/Q)/(K_{sf})][L_{avg} + (1.1)(M_{avg})]\sum Q_{ir} \quad \text{Eq. 13G}^{1}$$

Where,

x/Q = the highest calculated annual average relative concentration for any area at or beyond the **UNRESTRICTED AREA** boundary (2.2E-6 seconds per cubic meter)

All releases are considered "long-term" releases[2], and as such, the highest historical annual average dispersion factor, (x/Q), is used in the dose rate calculations.

The highest annual average dispersion factor (x/Q) is 2.2E-6 (UFSAR, 2.3.6.3) for purposes of routine, long-term concentrations (e.g., routine noble gas releases) (UFSAR, 2.3.6.3)

The maximum annual average on-shore concentrations occur in the southeast sector at a distance of 1300 meters for purposes of routine, long-term concentrations (e.g., routine noble gas releases) (UFSAR, 2.3.6.3)

K_{sf} = a constant, actually a safety factor, which is the ratio of the CCNPP annual skin dose rate limit to the annual skin dose rate limit of Control 3.11.2.1, (unitless)

The safety factor chosen shall be less than or equal to 1.00. This ensures the annual skin dose rate is always less than or equal to the annual skin dose rate limit of Control 3.11.2.1.

A safety factor of 1.00 will yield an annual skin dose rate which corresponds to the annual skin dose rate limit of Control 3.11.2.1.

A safety factor of 0.500 will yield an annual skin dose rate which corresponds to one-half the annual skin dose rate limit of Control 3.11.2.1.

It is recommended that a safety factor of 1.0 be used for calculating the annual skin dose rate, however, other values--not to exceed 1.00--may be used as directed by the General Supervisor Chemistry.

The particular value selected for the safety factor is somewhat arbitrary, however a safety factor does provide plant personnel with a degree of administrative control over the use of simplified equations for generating radioactive gaseous release permits. This administrative control is designed to minimize the possibility of violating Control 3.11.2.1 when simplifying assumptions are used.

The use of a safety factor is consistent with the ALARA philosophy that licensees should make every reasonable effort to maintain radiation exposures, and releases of radioactive materials in effluents to **UNRESTRICTED AREAS**, as low as is reasonably achievable.

This safety factor has been included in equation 13G to account for any potential nonconservatism associated with applying the empirically derived skin beta dose factor, L_{avg}, to all radionuclides identified in the gaseous release. Such nonconservatism could conceivable be present whenever radionuclides having a skin beta dose factor greater than L_{avg} are present in a gaseous release.

---

1 Equation 13G has been derived from NUREG-0133, 5.2.1, and Regulatory Guide 1.109 (Appendix B, Equation B-9 and Section C.2.f).

2 NUREG-0133, 3.3

L_{avg} = the empirically derived, site specific, average, skin dose factor due to beta emissions from TYPICAL GASEOUS EFFLUENTS (mrem/yr per microcurie/cubic meter)

A site-specific, average, beta skin dose factor for TYPICAL GASEOUS EFFLUENTS has been calculated from historical data.

The calculation of this site-specific, average, beta skin dose factor is presented on Attachment 11.

Refer to the table on Attachment 11 for the current value for the empirically derived, site specific, average beta skin dose factor.

M_{avg} = the empirically derived, site specific, average, air dose factor due to gamma emissions from TYPICAL GASEOUS EFFLUENTS (mrad/yr per microcurie/cubic meter)

A site-specific, average, gamma air dose factor for TYPICAL GASEOUS EFFLUENTS has been calculated from historical data.

The calculation of this site-specific, average, gamma air dose factor is presented on Attachment 11.

Refer to the table on Attachment 11 for the current value for the empirically derived, site specific, average gamma air dose factor.

1.1 = The conversion constant, 1.1 mrem/mrad, represents the skin dose (1.1 mrem) equivalent to air dose (1.0 mrad), and is used to convert air dose to skin dose.

Q_{ir} = the release rate of noble gas radionuclide, i, in (simultaneous) release, r (microcuries/second)

This value shall be calculated in accordance with equation 9G.

INSTANTANEOUS RELEASE RATE OF NOBLE GAS NUCLIDE i IN GASEOUS RELEASE r

$$Q_{ir} = (A_{ir})(F_r)(c') \qquad \text{Eq. 9G}$$

A_{ir} = the specific activity of noble gas radionuclide, i, in (simultaneous) release, r (microcuries/cubic centimeter)

F_r = the discharge flow rate for (simultaneous) release, r (cubic meters per second)

If the discharge flow rate is unknown (e.g., the release has not been conducted), the "Maximum Discharge Flow Rate" listed on Attachments 7 or 8 may be used to calculate the annual skin dose rate.

Whenever possible, the actual discharge flow rate determined from actual release conditions (e.g., initial pressure, volume, and temperature of a WGDT along with final pressure and temperature) shall be used in equation 9G.

Additional guidance for calculating discharge flow rates may be contained in approved CHEMISTRY SECTION procedures.

c' = a conversion constant (1E6 cubic centimeters per cubic meter)

e) Radiation monitoring system algorithms

(1) The plant vent stack radiation monitoring systems display values which are proportional to the annual skin dose rate due to noble gases emanating from the plant vent stacks.

(2) The values displayed by the plant vent stack radiation monitoring systems are not used for the purpose of effluent accountability per se, but the values displayed can provide a gross approximation of annual skin dose rate (see Control 3.3.3.9).

(3) The Westinghouse Main Vent Stack Noble Gas Monitor, 1/2-RE-5415, is an analog system and does not employ instrument algorithm to determine noble release rates.

(a) It is possible to approximate the noble gas release rates for the Unit 1 and Unit 2 main vents based on output from 1/2-RI-5415.

(b) These calculations are described elsewhere in the ODCM. (See equation 4G in the section "Calculating the Fixed Setpoint for 1/2-RI-5415.")

(4) The Sorrento WRNGM, 1/2-RE-5416, is a digital radiation monitoring system which employs an instrument algorithm to determine noble release rates (microcuries per second).

(a) It is possible to approximate the noble gas release rates for the Unit 1 and Unit 2 main vents based on output from 1/2-RIC-5415.

(b) These calculations are described elsewhere in the ODCM. (See equation 1G in the section "Calculating the Fixed High-High Alarm Setpoint for 1/2-RIC-5415.")

(5) The instrument algorithms and the (data base) values accessed by the instrument algorithms are controlled by EN-1-100.

f) Once the calculations above have been completed, the calculation results are compared to the applicable limits and corrective **ACTIONS** are initiated as described below.

7. Corrective actions

a) CHEMISTRY SECTION surveillance procedures shall contain/and or reference administrative and/or Control limits for annual skin dose rate for gaseous effluents and shall specify corrective actions to be initiated when these limits are exceeded.

b) Refer to Control 3.11.2.1 for actions to be taken in the event the calculated annual skin dose rate exceeds 3000 mr/yr.

ANNUAL ORGAN DOSE RATES DUE TO IODINES AND PARTICULATES IN GASEOUS EFFLUENTS

1. Introduction

   a) 10 CFR 20.1301 specifies dose rate limits associated with the release of radioactive materials to **UNRESTRICTED AREAS**.

   b) Radiological effluent controls were originally established to implement the requirements of 10 CFR 20.1301. The 10 CFR 50 Appendix I, Design Objectives for ALARA Radioactive Effluents, upon which these calculations are based, are more restrictive than the public dose limits of 10 CFR 20.1301.

   c) These radiological effluent controls are described below.

2. Radiological Effluent Controls

   a) The annual organ dose rates, due to iodines and particulates in gaseous waste discharged to **UNRESTRICTED AREAS**, shall be less than 1500 mr/yr (per Control 3.11.2.1).

   b) The routine surveillances which are performed to verify compliance with this radiological effluent controls are described below.

3. Surveillance Requirements

   a) The CHEMISTRY Sections sampling and analysis procedure(s) shall describe the CCNPP radioactive gaseous waste sampling and analysis program (required by Control 4.11.2.1.2).

   b) The results of the radioactive gaseous waste sampling and analysis program are used to calculate the annual organ dose rates due to iodines and particulates in gaseous effluents.

   c) The plant group(s) responsible for performing the required surveillances are identified below.

4. Responsible Plant Organization(s)

   a) The CHEMISTRY SECTION is responsible for calculating the annual organ dose rates due to iodines and particulates in gaseous effluents.

   b) The CHEMISTRY SECTION calculates the annual organ dose rates whenever the appropriate initiating conditions are present.

   c) These initiating conditions are contained in the following section.

5. Initiating Conditions

a) The annual organ dose rate--for each organ and at the **SITE BOUNDARY**--due to iodines and particulates in gaseous effluents is calculated at least weekly[1] for CONTINUOUS discharges from plant vent stacks.

b) The annual organ dose rate--for each organ and at the **SITE BOUNDARY**--due to iodines and particulates in gaseous effluents is calculated for each discharge of combustion products resulting from the burning of contaminated oil.

c) The annual organ dose rate--for each organ and at the **SITE BOUNDARY**--due to iodines and particulates in gaseous effluents is calculated for each **ABNORMAL AND/OR UNANTICIPATED RADIOACTIVE GAS RELEASE**[2].

d) Whenever the correct initiating conditions are present, the annual organ dose rates shall be calculated as described below.

6. Calculation Methodology

a) The annual organ dose rate, at the **SITE BOUNDARY**, due to iodine and particulate radionuclides in gaseous effluents released to **UNRESTRICTED AREAS** shall be calculated in accordance with equation 14G.[3]

ANNUAL ORGAN, o , DOSE RATE DUE TO IODINES AND PARTICULATES IN ALL SIMULTANEOUS GASEOUS RELEASES, r FROM THE SITE, 0

$$D_{o0} = \Sigma D_{or} \qquad \text{Eq. 14G}$$

D_{o0} = the site-boundary annual organ dose rate due to iodine and particulate radionuclides in all gaseous effluents discharged simultaneously from the site ("Unit 0")

D_{or} = the site-boundary annual organ dose rate due to iodine and particulate radionuclides in release, r

Sum for all releases, r, which are discharged simultaneously.

An example of a SIMULTANEOUS RELEASE would include the release of iodines and particulate radionuclides from the Unit 1 plant vent stack while also discharging iodines and particulate radionuclides from the Unit 2 plant vent stack.

An example of a SIMULTANEOUS RELEASE would include the release of iodine and particulate radionuclides from the Unit 1 plant vent stack while also discharging a waste gas decay tank.

---

1 The frequency is controlled by the implementing procedure and is based on plant conditions. Under no conditions shall the frequency be less than once per month (Control 4.11.2.1.1 or 4.11.2.1.2, Table 4.11-2).

2 See the definition of ABNORMAL/UNANTICIPATED GAS RELEASE in the DEFINITIONS section of the ODCM.

3 The alarm and fixed setpoints ... shall be determined and adjusted in accordance with the methodology and parameters of the ODCM. (Control 3.3.3.9).

Calculate the values of D_{or} for each SIMULTANEOUS RELEASE as shown below.

b) At CCNPP, two methods exist for calculating D_{or} (i.e., the annual organ dose rates due to iodine and particulate radionuclides in gaseous effluents released to **UNRESTRICTED AREAS**).

(1) The rigorous method shall be used IF a computer system and the appropriate software are available.

(2) The simplified method may be used IF a computer system and the appropriate software are NOT available.

(3) These methods, as well as additional supporting information, are presented in the following sections.

c) Rigorous Method

(1) Solution of the following equation may prove too rigorous for routine use unless a computer system and appropriate software are available.

(2) If a computer system and the appropriate software are available, the annual organ dose rates due to iodines and particulates in gaseous effluents released to an **UNRESTRICTED AREA** shall be calculated in accordance with equation 15G.

ANNUAL ORGAN, o, DOSE RATE DUE TO IODINES AND PARTICULATES IN GASEOUS RELEASE, r (RIGOROUS METHOD)

$$D_{or} = (x/Q)\sum(P_i)(Q_{ir}) \qquad \text{Eq. 15G}^1$$

Where,

x/Q = the highest calculated annual average relative concentration for any area at or beyond the **UNRESTRICTED AREA** boundary (2.2E-6 seconds per cubic meter)

All releases are considered "long-term" releases[1], and as such, the highest historical annual average dispersion factor, (x/Q), is used in the dose rate calculations.

The highest annual average dispersion factor (x/Q) is 2.2E-6 (UFSAR, 2.3.6.3) for purposes of routine, long-term concentrations (UFSAR, 2.3.6.3).

The maximum annual average on-shore concentrations occur in the southeast sector at a distance of 1300 meters for purposes of routine, long-term concentrations (UFSAR, 2.3.6.3).

P_i = the maximum organ inhalation pathway dose parameter for iodine and particulate radionuclides, i, for the most restrictive (i.e., child) age group (mrem/year per microcurie/cubic meter)

The inhalation pathway dose parameters have been obtained in accordance with NUREG-0133, 5.2.1.1.

[1] Equation 15G has been derived from NUREG-0133, 5.2.1.

The pathway dose factor specified in NUREG-0133, 5.2.1.b, specifies calculating the exposure to the "INFANT" age group, where the exposure is due to a combination of three separate pathways.

1) inhalation,

2) ground plane, and

3) food.

The latest NRC guidance has deleted the requirement to include the ground plane and food dose contributions when calculating maximum organ doses, therefore no pathway dose factors are calculated for the ground plane or food pathways.

The latest NRC guidance has changed the critical receptor age group from "infant" to "child."

The child, inhalation pathway dose parameters for various radionuclides, sorted by critical organ, are tabulated in Attachment 12.

It should be noted that the dose parameters, P_i, (listed in Attachment 12) calculated in accordance with NUREG-0133, section 5.2.1.1 and the latest NRC guidance are numerically equal to the "Inhalation Pathway Factors," K_i, calculated in accordance with NUREG-0133, section 5.3.1.1. As a result the ODCM does not contain two separate tables for values of P_i and K_i.

Q_{ir} = the release rate of iodine or particulate radionuclide, i, in (simultaneous) gaseous release, r (microcuries/second).

Calculate the values of Q_{ir} for each SIMULTANEOUS RELEASE in accordance with equation 9G.

INSTANTANEOUS RELEASE RATE OF IODINE OR PARTICULATE NUCLIDE i IN GASEOUS RELEASE r

$$Q_{ir} = (A_{ir})(F_r)(c') \qquad \text{Eq. 9G}$$

A_{ir} = the specific activity of iodine or particulate radionuclide, i, in (simultaneous) release, r (microcuries/cubic centimeter)

F_r = the discharge flow rate for (simultaneous) release, r (cubic meters per second)

If the discharge flow rate is unknown (e.g., the release has not been conducted), the "Maximum Discharge Flow Rate" listed on Attachments 7 or 8 may be used to calculate the annual organ dose rate.

Additional guidance for calculating discharge flow rates may be contained in approved CHEMISTRY SECTION procedures.

c' = a conversion constant (1E6 cubic centimeters per cubic meter)

---

[1] NUREG-0133, 3.3

d) simplified method

(1) If a computer system and the appropriate software are NOT available, the annual organ dose rate due to iodines and particulates in gaseous effluents discharged from the site to **UNRESTRICTED AREAS** may be calculated in accordance with equation 16G.

ANNUAL ORGAN, o, DOSE RATE DUE TO IODINES AND PARTICULATES IN GASEOUS RELEASE, r (SIMPLIFIED METHOD)

$$D_{or} = (1/K_{sf})(x/Q)(P_{max})\sum Q_{ir} \qquad \text{Eq. 16G}^{1}$$

Where,

K_{sf} = a constant, actually a safety factor, which is the ratio of the CCNPP organ dose rate limit to the organ dose rate limit of Control 3.11.2.1, (unitless)

The safety factor chosen shall be less than or equal to 1.00. This ensures the organ dose rate is always less than or equal to the organ dose rate limit of Control 3.11.2.1.

A safety factor of 1.00 will yield an organ dose rate which corresponds to the organ dose rate limit of Control 3.11.2.1.

A safety factor of 0.500 will yield an organ dose which corresponds to one-half the organ dose rate limit of Control 3.11.2.1.

It is recommended that a safety factor of 1.0 be used for calculating the organ dose rate, however, other values--not to exceed 1.00--may be used as directed by the General Supervisor Chemistry.

The particular value selected for the safety factor is somewhat arbitrary, however a safety factor does provide plant personnel with a degree of administrative control over the use of simplified equations for generating radioactive gaseous release permits. This administrative control is designed to minimize the possibility of violating Control 3.11.2.1 when simplifying assumptions are used.

The use of a safety factor is consistent with the ALARA philosophy that licensees should make every reasonable effort to maintain radiation exposures, and releases of radioactive materials in effluents to **UNRESTRICTED AREAS**, as low as is reasonably achievable.

This safety factor has been included in equation 16G to account for any potential nonconservatism associated with applying the dose parameter, P_{max}, to all radionuclides identified in the gaseous release. Such nonconservatism could conceivable be present whenever radionuclides having a dose parameter greater than P_{max} are present in a gaseous release.

x/Q = the highest calculated annual average relative concentration for any area at or beyond the **UNRESTRICTED AREA** boundary (2.2E-6 seconds per cubic meter)

All releases are considered "long-term" releases[1], and as such, the highest historical annual average dispersion factor, (x/Q), is used in the dose rate calculations.

---

1 Equation 16G has been derived from NUREG-0133, 5.2.1.

The highest annual average dispersion factor (x/Q) is 2.2E-6 (UFSAR, 2.3.6.3) for purposes of routine, long-term concentrations (e.g., routine noble gas releases) (UFSAR, 2.3.6.3).

The maximum annual average on-shore concentrations occur in the southeast sector at a distance of 1300 meters for purposes of routine, long-term concentrations (e.g., routine noble gas releases) (UFSAR, 2.3.6.3).

P_{max} = the most restrictive dose parameter which would be reasonably anticipated for the inhalation pathway, child age group, thyroid organ, and I-131 radionuclide (mrem/year per microcurie/cubic meter)

The inhalation pathway dose parameters have been obtained in accordance with NUREG-0133, 5.2.1.1.

The pathway dose factor specified in NUREG-0133, 5.2.1.b, specifies calculating the exposure to the "INFANT" age group, where the exposure is due to a combination of three separate pathways.

1) inhalation,

2) ground plane, and

3) food.

The latest NRC guidance has deleted the requirement to include the ground plane and food dose contributions when calculating maximum organ doses, therefore no pathway dose factors are calculated for the ground plane or food pathways.

The latest NRC guidance has changed the critical receptor age group from "infant" to "child."

The child, inhalation pathway dose parameters for various radionuclides, sorted by critical organ, are tabulated in Attachment 12.

It should be noted that the dose parameters, P_i, (listed in Attachment 12) calculated in accordance with NUREG-0133, section 5.2.1.1 and the latest NRC guidance are numerically equal to the "Inhalation Pathway Factors," K_i, calculated in accordance with NUREG-0133, section 5.3.1.1. As a result the ODCM does not contain two separate tables for values of P_i and K_i.

Q_{ir} = the release rate of iodine or particulate radionuclide, i, in (simultaneous) gaseous release, r (microcuries/second).

Calculate the values of Q_{ir} for each SIMULTANEOUS RELEASE in accordance with equation 9G.

---

[1] NUREG-0133, 3.3

INSTANTANEOUS RELEASE RATE OF IODINE OR PARTICULATE NUCLIDE i IN GASEOUS RELEASE r

$$Q_{ir} = (A_{ir})(F_r)(c') \quad \text{Eq. 9G}$$

A_{ir} = the specific activity of iodine or particulate radionuclide, i, in (simultaneous) release, r (microcuries/cubic centimeter)

F_r = the discharge flow rate for (simultaneous) release, r (cubic meters per second)

If the discharge flow rate is unknown (e.g., the release has not been conducted), the "Maximum Discharge Flow Rate" listed on Attachments 7 or 8 may be used to calculate the annual organ dose rate.

Additional guidance for calculating discharge flow rates may be contained in approved CHEMISTRY SECTION procedures.

c' = a conversion constant (1E6 cubic centimeters per cubic meter)

---

e) Once the calculations above have been completed, the calculation results are compared to the applicable limits and corrective actions are initiated as described below.

7. Corrective actions

a) CHEMISTRY SECTION surveillance procedures shall contain/and/or reference administrative and/or Control limits for annual organ dose rates for gaseous effluents and shall specify corrective actions to be initiated when these limits are exceeded.

b) Refer to Control 3.11.2.1 for actions to be taken in the event the calculated annual organ dose rate to any organ exceeds 1500 mr/yr.

CUMULATIVE GAMMA AIR DOSES DUE TO NOBLE GASES IN GASEOUS EFFLUENTS

1. Introduction

a) Appendix I to 10 CFR 50 specifies cumulative gamma air dose limits associated with the release of radioactive materials to **UNRESTRICTED AREAS**.

b) Radiological effluent controls have been established to implement the requirements of 10 CFR 50, Appendix I.

c) These radiological effluent controls are described below.

2. Radiological Effluent Controls

   a) The cumulative gamma air dose, due to noble gases in gaseous effluents released to **UNRESTRICTED AREAS**, shall be less than 10 mrads in any calendar quarter, and shall be less than 20 mrads in any calendar year (per Control 3.11.2.2)

   b) The routine surveillances which are performed to verify compliance with these radiological effluent controls are described below.

3. Surveillance Requirement(s)

   a) The cumulative gamma air doses, for the current calendar month, the calendar quarter, and the current calendar year, due to noble gases in gaseous effluents, shall be determined at least once every 31 days (Control 4.11.2.2).

   b) The plant group(s) responsible for performing the required surveillance(s) are identified below.

4. Responsible Plant Organizations

   a) The CHEMISTRY SECTION is responsible for calculating the cumulative gamma air doses for the current calendar quarter and the current calendar year.

   b) The CHEMISTRY SECTION calculates the cumulative gamma air doses whenever the appropriate initiating conditions are present

   c) These initiating conditions are contained in the following section.

5. Initiating Conditions

   a) The cumulative gamma air doses due to noble gases in gaseous effluents shall be determined at least once per 31 days (Control 4.11.2.2).

   b) The cumulative gamma air doses due to noble gases in gaseous effluents shall be calculated for each release of a WGDT.

   c) The cumulative gamma air doses due to noble gases in gaseous effluents shall be calculated for each vent of a containment building.

   d) The cumulative gamma air doses due to noble gases in gaseous effluents shall be calculated for each **PURGE** of a containment building.

   e) The cumulative gamma air doses due to noble gases in gaseous effluents shall be calculated at least weekly[1] for CONTINUOUS discharges from plant vent stacks.

   f) The cumulative gamma air doses due to noble gases in gaseous effluents shall be calculated for each discharge of combustion products resulting from the burning of contaminated oil.

---

[1] The frequency is controlled by the implementing procedure, and is based on plant conditions. Under no conditions shall the frequency be less than once per month (Control 4.11.2.1.1 or 4.11.2.1.2, Table 4.11-2).

g) The cumulative gamma air doses due to noble gases in gaseous effluents shall be calculated for each **ABNORMAL AND/OR UNANTICIPATED RADIOACTIVE GAS RELEASE**[1].

h) Whenever the correct initiating conditions are present, the cumulative gamma air doses shall be calculated as described below.

6. Calculation Methodology

a) The cumulative gamma air dose at the **SITE BOUNDARY** (e.g., for the current calendar month, current calendar quarter, current calendar year, or previous 92 days) due to noble gases in gaseous effluents shall be calculated using the following equation[2]:

---

1 The criteria used to define ABNORMAL AND UNANTICIPATED GAS RELEASES may be found in the implementing procedures.

2 The alarm and fixed setpoints ... shall be determined and adjusted in accordance with the methodology and parameters of the ODCM. (Control 3.3.3.9).

CUMULATIVE GAMMA, g, AIR DOSE FOR ALL GASEOUS RELEASES, r, DISCHARGED DURING TIME INTERVAL, t

$$D_{gt} = \Sigma D_{gr} \qquad \text{Eq. 17G}$$

Where,

D_{gt} = the cumulative gamma air dose (mrad) at the **SITE BOUNDARY** due to noble gas radionuclides contained in all gaseous radwaste discharged from the site during the time interval, t

D_{gr} = the cumulative gamma air dose (mrad) at the **SITE BOUNDARY** due to noble gas radionuclides contained in gaseous radwaste release, r, discharged from the site during the time interval of interest

Calculate the values of D_{gr} for each gaseous release as described below.

---

b) At CCNPP, two methods exist for calculating D_{gr} (i.e., the gamma air dose at the **SITE BOUNDARY** due to noble gas radionuclides contained in a gaseous radwaste release, r, discharged from the site during a specified time interval).

(1) The rigorous method shall be used IF a computer system and the appropriate software are available.

(2) The simplified method may be used IF a computer system and the appropriate software are NOT available.

(3) These methods, as well as additional supporting information, are presented in the following sections.

c) rigorous method

(1) Solution of the following equation may prove too rigorous for routine use unless a computer system and appropriate software are available.

(2) If a computer system and the appropriate software are available, the gamma air dose due to noble gases in gaseous effluents released to **UNRESTRICTED AREAS** shall be calculated in accordance with equation 18G.

GAMMA AIR DOSE DUE TO NOBLE GASES IN GAS RELEASE, r (RIGOROUS EQUATION)

$$D_{gr} = (3.17E\text{-}8)(x/Q)\Sigma[(M_i)(Q'_{ir})] \qquad \text{Eq. 18G}^1$$

Where,

3.17E-8 = The conversion constant, 3.17E-8, represents the inverse of the number of seconds in a year.

x/Q = the highest calculated annual average relative concentration for any area at or beyond the **UNRESTRICTED AREA** boundary (2.2E-6 seconds per cubic meter)

All releases are considered "long-term" releases[2], and as such, the highest historical annual average dispersion factor, (x/Q), is used in the dose calculations.

The highest annual average dispersion factor (x/Q) is 2.2E-6 (UFSAR, 2.3.6.3) for purposes of routine, long-term concentrations (e.g., routine noble gas releases) (UFSAR, 2.3.6.3).

The maximum annual average on-shore concentrations occur in the southeast sector at a distance of 1300 meters for purposes of routine, long-term concentrations (e.g., routine noble gas releases) (UFSAR, 2.3.6.3).

M_i = the air dose factor due to gamma emissions for each identified noble gas radionuclide, i (mrad/yr per microcurie/cubic meter)

The gamma air dose factors have been obtained from Regulatory Guide 1.109, Appendix B, Table B-1.

The gamma air dose factors for various noble gas radionuclides are tabulated in Attachment 10.

Q'_{ir} = the total (time averaged) activity of noble gas radionuclide, i, in gaseous release, r (microcuries).

At CCNPP, all releases are considered long term releases.

Calculate the values of Q_{ir} for each release in accordance with equation 19G.

---

1 Equation 18G has been derived from NUREG-0133, 5.3.1..
2 NUREG-0133, 3.3

TOTAL (TIME AVERAGED) ACTIVITY OF NOBLE GAS NUCLIDE i IN GASEOUS RELEASE r

$$Q'_{ir} = (A_{ir})(F_r)(t_{ir})(c') \quad \text{Eq. 19G}$$

A_{ir} = the specific activity of noble gas radionuclide, i, in release, r, discharged during the time interval of interest (microcuries/cubic centimeter)

F_r = the discharge flow rate for release, r, discharged during the time interval of interest (cubic meters per second)

If the discharge flow rate is unknown (e.g., the gaseous radwaste has not been released), the "Maximum Discharge Flow Rate" listed on Attachments 7 or 8 may be used to calculate the average activity for nuclide i.

Whenever possible, the actual discharge flow rate determined from actual release conditions (e.g., initial pressure, volume, and temperature of a WGDT along with final pressure and temperature) shall be used in equation 19G.

Additional guidance for calculating discharge flow rates may be contained in approved CHEMISTRY SECTION procedures.

t_{ir} = the duration of the gaseous radwaste release (seconds)

c' = a conversion constant, 1E6 cubic centimeters per cubic meter, which represents the number of cubic centimeters per cubic meter.

---

(3) In the event a computer system is unavailable, a simplified equation may be used to calculate the gamma air dose due to noble gases in gaseous effluents released to **UNRESTRICTED AREAS**.

(4) The simplified method is presented below.

d) simplified method

(1) If a computer system and appropriate software are NOT available to perform the rigorous gamma air dose calculation described in the previous section, the gamma air dose, due to noble gas radionuclides, in any single release of waste gases discharged to **UNRESTRICTED AREAS** may be calculated in accordance with equation 20G.

GAMMA AIR DOSE DUE TO NOBLE GASES IN GAS RELEASE, r (SIMPLIFIED EQUATION)

$$D_{gr} = [(3.17E\text{-}8)(x/Q)(M_{avg})/K_{sf}]\sum Q^{*}_{ir} \qquad \text{Eq. 20G}^{1}$$

3.17E-8 = The conversion constant, 3.17E-8, represents the inverse of the number of seconds in a year.

x/Q = the highest calculated annual average relative concentration for any area at or beyond the **UNRESTRICTED AREA** boundary (2.2E-6 seconds per cubic meter)

All releases are considered "long-term" releases[2], and as such, the highest historical annual average dispersion factor, (x/Q), is used in the dose calculations.

The highest annual average dispersion factor (x/Q) is 2.2E-6 (UFSAR, 2.3.6.3) for purposes of routine, long-term concentrations (e.g., routine noble gas releases) (UFSAR, 2.3.6.3).

The maximum annual average on-shore concentrations occur in the southeast sector at a distance of 1300 meters for purposes of routine, long-term concentrations (e.g., routine noble gas releases) (UFSAR, 2.3.6.3).

M_{avg} = the empirically derived, site specific, average gamma air dose factor for each identified noble gas radionuclide, i (mrad/yr per microcurie/cubic meter)

A site-specific, average, gamma air dose factor has been calculated from historical data.

The calculation of this site-specific, average, gamma air dose factor is presented on Attachment 11 (use section 3.4.5 of the old ODCM.)

K_{sf} = a constant, actually a safety factor, which is the ratio of the CCNPP gamma air dose limit to the gamma air dose limit of Control 3.11.2.2, (unitless)

The safety factor chosen shall be less than or equal to 1.00. This ensures the gamma air dose is always less than or equal to the gamma air dose limit of Control 3.11.2.2.

A safety factor of 1.00 will yield an gamma air dose which corresponds to the gamma air dose limit of Control 3.11.2.2.

A safety factor of 0.500 will yield an gamma air dose which corresponds to one-half the gamma air dose limit of Control 3.11.2.2.

It is recommended that a safety factor of 1.0 be used for calculating the gamma air dose, however, other values--not to exceed 1.00--may be used as directed by the General Supervisor Chemistry.

The particular value selected for the safety factor is somewhat arbitrary, however a safety factor does provide plant personnel with a degree of administrative control over the use of simplified equations for generating radioactive gaseous release permits. This administrative control is designed to minimize the possibility of violating Control 3.11.2.2 when simplifying assumptions are used.

---

1 Equation 20G has been derived from NUREG-0133, 5.3.1.
2 NUREG-0133, 3.3

The use of a safety factor is consistent with the ALARA philosophy that licensees should make every reasonable effort to maintain radiation exposures, and releases of radioactive materials in effluents to **UNRESTRICTED AREAS**, as low as is reasonably achievable.

This safety factor has been included in equation 20G to account for any potential nonconservatism associated with applying the empirically derived gamma air dose factor, M_{avg}, to all radionuclides identified in the gaseous release. Such nonconservatism could conceivable be present whenever radionuclides having a gamma air dose factor greater than M_{avg} are present in a gaseous release.

Q'_{ir} = the total (time averaged) activity of noble gas radionuclide, i, in gaseous release, r (microcuries)

At CCNPP, all releases are considered long term releases.

Calculate the values of Q_{ir} for each release in accordance with equation 19G.

TOTAL (TIME AVERAGED) ACTIVITY OF NOBLE GAS NUCLIDE i IN GASEOUS RELEASE r

$$Q'_{ir} = (A_{ir})(F_r)(t_{ir})(c') \qquad \text{Eq. 19G}$$

A_{ir} = the specific activity of noble gas radionuclide, i, in release, r, discharged during the time interval of interest (microcuries/cubic centimeter).

F_r = the discharge flow rate for release, r, discharged during the time interval of interest (cubic meters per second).

If the discharge flow rate is unknown (e.g., the gaseous radwaste has not been released), the "Maximum Discharge Flow Rate" listed on Attachments 7 or 8 may be used to calculate the average activity for nuclide i.

Additional guidance for calculating discharge flow rates may be contained in approved CHEMISTRY SECTION procedures.

t_{ir} = the duration of the gaseous radwaste release (seconds).

c' = a conversion constant, 1E6 cubic centimeters per cubic meter, which represents the number of cubic centimeters per cubic meter.

e) Once the calculations above have been completed, the calculation results are compared to the applicable limits and corrective actions are initiated as described below.

7. Corrective actions

a) CHEMISTRY SECTION surveillance procedures shall contain/and or reference administrative and/or Control limits for quarterly and yearly gamma air doses for gaseous effluents and shall specify corrective actions to be initiated when these limits are exceeded.

b) Refer to Control 3.11.2.2 for actions to be taken in the event the calculated cumulative gamma air doses exceed 10 mrads per calendar quarter or 20 mrads per calendar year.

CUMULATIVE BETA AIR DOSES DUE TO NOBLE GASES IN GASEOUS EFFLUENTS

1. Introduction

a) Appendix I to 10 CFR 50 specifies cumulative beta air dose limits associated with the release of radioactive materials to **UNRESTRICTED AREAS**.

b) Radiological effluent controls have been established to implement the requirements of 10 CFR 50, Appendix I.

c) These radiological effluent controls are described below.

2. Radiological Effluent Controls

a) The cumulative beta air dose, due to noble gases in gaseous effluents released to **UNRESTRICTED AREAS**, shall be less than 20 mrads in any calendar quarter, and shall be less than 40 mrads in any calendar year (per Control 3.11.2.2)

b) The routine surveillances which are performed to verify compliance with these radiological effluent controls are described below.

3. Surveillance Requirement(s)

a) The cumulative beta air doses, for the current calendar quarter and the current calendar year, due to noble gases in gaseous effluents, shall be determined at least once every 31 days (Control 4.11.2.2).

b) The plant group(s) responsible for performing the required surveillance(s) are identified below.

4. Responsible Plant Organizations

a) The CHEMISTRY SECTION is responsible for calculating the cumulative beta air doses for the current calendar quarter and the current calendar year.

b) The CHEMISTRY SECTION calculates the cumulative beta air doses whenever the appropriate initiating conditions are present

c) These initiating conditions are contained in the following section.

5. Initiating Conditions

a) The cumulative beta air doses due to noble gases in gaseous effluents shall be determined at least once per 31 days (Control 4.11.2.2).

b) The cumulative beta air doses due to noble gases in gaseous effluents are calculated for each release of a WGDT.

c) The cumulative beta air doses due to noble gases in gaseous effluents are calculated for each vent of a containment building.

d) The cumulative beta air doses due to noble gases in gaseous effluents are calculated for each **PURGE** of a containment building.

e) The cumulative beta air doses due to noble gases in gaseous effluents are calculated at least weekly[1] for CONTINUOUS discharges from plant vent stacks.

f) The cumulative beta air doses due to noble gases in gaseous effluents are calculated for each discharge of combustion products resulting from the burning of contaminated oil.

g) The cumulative beta air doses due to noble gases in gaseous effluents are calculated for each **ABNORMAL AND/OR UNANTICIPATED RADIOACTIVE GAS RELEASE**[2].

h) Whenever the correct initiating conditions are present, the cumulative beta air doses shall be calculated as described below.

6. Calculation Methodology

a) The cumulative beta air doses (e.g., for the current calendar month, current calendar quarter, current calendar year, or previous 92 days) due to noble gases in gaseous effluents shall be calculated in accordance with equation 21G.

---

1 The frequency is controlled by the implementing procedure, and is based on plant conditions. Under no conditions shall the frequency be less than once per month (Controls 4.11.2.1.1 or 4.11.2.1.2, Table 4.11-2).

2 The criteria used to define ABNORMAL AND UNANTICIPATED GAS RELEASES may be found in CP-612 or CP-604.

CUMULATIVE BETA AIR DOSE FOR ALL GASEOUS RELEASES, r, DISCHARGED DURING TIME INTERVAL, t

$$D_{\beta t} = \sum D_{\beta r} \qquad \text{Eq. 21G}$$

Where,

$D_{\beta t}$ = the cumulative beta air dose (mrad) at the **SITE BOUNDARY** due to noble gas radionuclides contained in all gaseous radwaste discharged from the site during the time interval, t

$D_{\beta r}$ = the beta air dose (mrad) due to noble gas radionuclides contained in gaseous radwaste release, r, discharged from the site during the time interval of interest

Calculate the values of $D_{\beta r}$ for each gaseous release as described below.

---

b) At CCNPP, two methods exist for calculating $D_{\beta r}$ (the beta air dose at the **SITE BOUNDARY** due to noble gas radionuclides contained in a gaseous radwaste release, r, discharged from the site).

(1) The rigorous method shall be used IF a computer system and the appropriate software are available.

(2) The simplified method may be used IF a computer system and the appropriate software are NOT available.

(3) These methods, as well as additional supporting information, are presented in the following sections.

c) Rigorous method

(1) Solution of the following equation may prove too rigorous for routine use unless a computer system and appropriate software are available.

(2) If a computer system and the appropriate software are available, the cumulative beta air dose due to noble gases in gaseous effluents released to **UNRESTRICTED AREAS** shall be calculated in accordance with equation 22G.

BETA AIR DOSE DUE TO NOBLE GASES IN GAS RELEASE, r (RIGOROUS EQUATION)

$$D_{\beta r} = (3.17E\text{-}8)(x/Q)\sum[(N_i)(Q'_{ir})] \qquad \text{Eq. 22G}^1$$

Where,

$D_{\beta r}$ = the beta air dose due to noble gas radionuclides contained in gaseous radwaste release, r, discharged from the site during the time interval of interest

3.17E-8 = The conversion constant, 3.17E-8, represents the inverse of the number of seconds in a year.

x/Q = the highest calculated annual average relative concentration for any area at or beyond the **UNRESTRICTED AREA** boundary (2.2E-6 seconds per cubic meter)

All releases are considered "long-term" releases[2], and as such, the highest historical annual average dispersion factor, (x/Q), is used in the dose calculations.

The highest annual average dispersion factor (x/Q) is 2.2E-6 (UFSAR, 2.3.6.3) for purposes of routine, long-term concentrations (e.g., routine noble gas releases) (UFSAR, 2.3.6.3).

The maximum annual average on-shore concentrations occur in the southeast sector at a distance of 1300 meters for purposes of routine, long-term concentrations (e.g., routine noble gas releases) (UFSAR, 2.3.6.3).

N_i = the air dose factor due to beta emissions for each identified noble gas radionuclide, i (mrad/yr per microcurie/cubic meter)

The beta air dose factors have been obtained from Regulatory Guide 1.109, Appendix B, Table B-1.

The beta air dose factors for various noble gas radionuclides are tabulated in Attachment 10 (Attachment 1 of old ODCM).

Q'_{ir} = the total (time averaged) activity of noble gas radionuclide, i, in gaseous release, r (microcuries).

At CCNPP, all releases are considered long term releases.

Calculate the values of Q_{ir} for each release in accordance with equation 19G.

---

1 Equation 22G has been derived from NUREG-0133, 5.3.1.
2 NUREG-0133, 3.3

TOTAL (TIME AVERAGED) ACTIVITY OF NOBLE GAS NUCLIDE i IN GASEOUS RELEASE r

$$Q^{*}_{ir} = (A_{ir})(F_r)(t_{ir})(c') \qquad \text{Eq. 19G}$$

A_{ir} = the specific activity of noble gas radionuclide, i, in release, r, discharged during the time interval of interest (microcuries/cubic centimeter).

F_r = the discharge flow rate for release, r, discharged during the time interval of interest (cubic meters per second).

If the discharge flow rate is unknown (e.g., the gaseous radwaste has not been released), the "Maximum Discharge Flow Rate" listed on Attachments 7 or 8 may be used to calculate the average activity for nuclide i.

Additional guidance for calculating discharge flow rates may be contained in approved CHEMISTRY SECTION procedures.

t_{ir} = the duration of the gaseous radwaste release (seconds).

c' = a conversion constant, 1E6 cubic centimeters per cubic meter.

---

(3) In the event a computer system is unavailable, a simplified equation may be used to calculate the gamma air dose due to noble gases in gaseous effluents released to **UNRESTRICTED AREAS**.

(4) The simplified method is presented below.

d) Simplified method

(1) If a computer system and the appropriate software are NOT available to perform the rigorous beta air dose calculation described in the previous section, the beta air dose resulting from a single release of waste gases discharged to **UNRESTRICTED AREAS** may be calculated in accordance with equation 23G.

BETA AIR DOSE DUE TO NOBLE GASES IN GAS RELEASE, r (SIMPLIFIED EQUATION)

$$D_{\beta r} = [(3.17E\text{-}8)(x/Q)(N_{avg})/K_{sf}]\sum Q'_{ir} \qquad \text{Eq. 23G}^{1}$$

3.17E-8 = The conversion constant, 3.17E-8, represents the inverse of the number of seconds in a year.

x/Q = the highest calculated annual average relative concentration for any area at or beyond the **UNRESTRICTED AREA** boundary (2.2E-6 seconds per cubic meter)

All releases are considered "long-term" releases[2], and as such, the highest historical annual average dispersion factor, (x/Q), is used in the dose calculations.

The highest annual average dispersion factor (x/Q) is 2.2E-6 (UFSAR, 2.3.6.3) for purposes of routine, long-term concentrations (e.g., routine noble gas releases) (UFSAR, 2.3.6.3).

The maximum annual average on-shore concentrations occur in the southeast sector at a distance of 1300 meters for purposes of routine, long-term concentrations (e.g., routine noble gas releases) (UFSAR, 2.3.6.3).

N_{avg} = the empirically derived, site specific, average beta air dose factor for each identified noble gas radionuclide, i (mrad/yr per microcurie/cubic meter)

A site-specific, average, beta air dose factor has been calculated from historical data.

The calculation of this site-specific, average, beta air dose factor is presented on Attachment 11.

K_{sf} = a constant, actually a safety factor, which is the ratio of the CCNPP beta air dose limit to the beta air dose limit of Control 3.11.2.2, (unitless)

The safety factor chosen shall be less than or equal to 1.00. This ensures the beta air dose is always less than or equal to the beta air dose limit of Control 3.11.2.2.

A safety factor of 1.00 will yield an organ dose which corresponds to the beta air dose limit of Control 3.11.2.2.

A safety factor of 0.500 will yield an beta air dose which corresponds to one-half the beta air dose limit of Control 3.11.2.2.

It is recommended that a safety factor of 1.0 be used for calculating the beta air dose, however, other values--not to exceed 1.00--may be used as directed by the General Supervisor Chemistry.

---

1 Equation 23G has been derived from NUREG-0133, 5.3.1.
2 NUREG-0133, 3.3

The particular value selected for the safety factor is somewhat arbitrary, however a safety factor does provide plant personnel with a degree of administrative control over the use of simplified equations for generating radioactive gaseous release permits. This administrative control is designed to minimize the possibility of violating Control 3.11.2.2 when simplifying assumptions are used.

The use of a safety factor is consistent with the ALARA philosophy that licensees should make every reasonable effort to maintain radiation exposures, and releases of radioactive materials in effluents to **UNRESTRICTED AREAS**, as low as is reasonably achievable.

This safety factor has been included in equation 23G to account for any potential nonconservatism associated with applying the empirically derived beta air dose factor, N_{avg}, to all radionuclides identified in the gaseous release. Such nonconservatism could conceivable be present whenever radionuclides having a beta air dose factor greater than N_{avg} are present in a gaseous release.

Q'_{ir} = the total (time averaged) activity of noble gas radionuclide, i, in gaseous release, r (microcuries)

At CCNPP, all releases are considered long term releases.

Calculate the values of Q_{ir} for each release in accordance with equation 19G.

TOTAL (TIME AVERAGED) ACTIVITY OF NOBLE GAS NUCLIDE i IN GASEOUS RELEASE r

$$Q'_{ir} = (A_{ir})(F_r)(t_{ir})(c') \qquad \text{Eq. 19G}$$

A_{ir} = the specific activity of noble gas radionuclide, i, in release, r, discharged during the time interval of interest (microcuries/cubic centimeter)

F_r = the discharge flow rate for release, r, discharged during the time interval of interest (cubic meters per second)

If the discharge flow rate is unknown (e.g., the gaseous radwaste has not been released), the "Maximum Discharge Flow Rate" listed on Attachments 7 or 8 may be used to calculate the average activity for nuclide i.

Additional guidance for calculating discharge flow rates may be contained in approved CHEMISTRY SECTION procedures.

t_{ir} = the duration of the gaseous radwaste release (seconds).

c' = a conversion constant, 1E6 cubic centimeters per cubic meter.

---

e) Once the calculations above have been completed, the calculation results are compared to the applicable limits and corrective actions are initiated as described below.

7. Corrective actions

   a) CHEMISTRY SECTION surveillance procedures shall contain/and or reference administrative and/or Control limits for quarterly and yearly beta air doses for gaseous effluents and shall specify corrective actions to be initiated when these limits are exceeded.

   b) Refer to Control 3.11.2.2 for actions to be taken in the event the calculated cumulative beta air doses exceed 20 mrads per calendar quarter or 40 mrads per calendar year.

CUMULATIVE ORGAN DOSES DUE TO IODINES AND PARTICULATES IN GASEOUS EFFLUENTS

1. Introduction

   a) Appendix I to 10 CFR 50 specifies cumulative organ dose limits associated with the release of radioactive materials to **UNRESTRICTED AREAS**.

   b) Radiological effluent controls have been established to implement the requirements of 10 CFR 50, Appendix I.

   c) These radiological effluent controls are described below.

2. Radiological Effluent Controls

   a) The cumulative organ dose due to iodines and particulates in gaseous effluents released to **UNRESTRICTED AREAS** shall be less than 15 mrems per calendar quarter, and shall be less than 30 mrems per calendar year (per Control 3.11.2.3).

   b) The cumulative organ dose due to iodines and particulates in gaseous, contaminated oil combustion products released to **UNRESTRICTED AREAS** shall be less than 0.015 mrems per quarter, and shall be less than 0.030 mrems per year (per Control 3.11.2.3).

   c) The routine surveillances which are performed to verify compliance with this radiological effluent controls are described below.

3. Surveillance Requirements

   a) The cumulative organ doses (due to iodines and particulates in gaseous waste discharged to **UNRESTRICTED AREAS**), for the current calendar month, the current calendar quarter, and the current calendar year, shall be determined at least once every 31 days in accordance with the ODCM (per Control 4.11.2.3).

   b) The plant group(s) responsible for performing the required surveillances are identified below.

4. Responsible Plant Organizations

   a) The CHEMISTRY SECTION is responsible for implementing the surveillances required by Control 4.11.2.3.

   b) The CCNPP CHEMISTRY SECTION calculates the cumulative organ doses whenever the appropriate initiating conditions are present

   c) These initiating conditions are contained in the following section.

5. Initiating Conditions

   a) The cumulative organ dose--for each organ--shall be determined at least once per 31 days (Control 4.11.2.2).

   b) The cumulative organ dose--for each organ--due to iodines and particulates in gaseous effluents shall be calculated at least weekly[1] for CONTINUOUS discharges from plant vent stacks.

   c) The cumulative organ dose--for each organ--due to iodines and particulates in gaseous effluents shall be calculated for each discharge of combustion products resulting from the burning of contaminated oil.

   d) The cumulative organ dose--for each organ--due to iodines and particulates in gaseous effluents shall be calculated for each **ABNORMAL AND/OR UNANTICIPATED RADIOACTIVE GAS RELEASE**.

   e) Whenever the correct initiating conditions are present, the annual cumulative organ doses shall be calculated as described below.

6. Calculation Methodology

   a) The cumulative organ doses (for the calendar month, calendar quarter, previous 92 days, and calendar year) due to iodines and particulates in gaseous waste discharged to **UNRESTRICTED AREAS** shall be calculated in accordance with equation 24G.

---

[1] The frequency is controlled by the implementing procedure, and is based on plant conditions. Under no conditions shall the frequency be less than once per month (Controls 4.11.2.1.1 or 4.11.2.1.2, Table 4.11-2).

CUMULATIVE DOSE TO ORGAN, o, FROM ALL GASEOUS RELEASES, r, DISCHARGED DURING TIME INTERVAL, t

$$D_{ot} = \Sigma D_{or} \qquad \text{Eq. 24G}$$

Where,

D_{ot} = the cumulative dose (mrad) to organ, o, at the **SITE BOUNDARY**, due to iodine and particulate radionuclides contained in gaseous waste discharged from the site during the time interval, t

D_{or} = the dose (mrad) to organ, o, at the **SITE BOUNDARY** due to iodine and particulate radionuclides in gaseous release, r, discharged from the site during the time interval of interest

Calculate the values of D_{or} for each gaseous release as described below.

b) At CCNPP, two methods exist for calculating D_{or} (the organ doses due to iodines and particulates resulting from any single release of radioactive gases to an **UNRESTRICTED AREA**).

(1) The rigorous method shall be used IF a computer system and the appropriate software are available.

(2) The simplified method may be used IF a computer system and the appropriate software are NOT available.

(3) These methods, as well as additional supporting information, are presented in the following sections.

c) Rigorous method

(1) Application of the following equation may prove too rigorous for routine use unless a computer system and the appropriate software are available.

(2) If a computer system and the appropriate software are available, the organ doses due to iodines and particulates contained in any single release of radioactive gases to **UNRESTRICTED AREAS** shall be calculated in accordance with equation 25G.

DOSE TO ORGAN, o, DUE TO IODINES AND PARTICULATES IN GAS RELEASE, r (RIGOROUS EQUATION)

$$D_{or} = (3.17E\text{-}8)(W_v)\sum(R_{ipao})(Q'_{ir}) \qquad \text{Eq. 25G}^1$$

Where,

D_{or} = the dose (mrem) to organ, o, at the **SITE BOUNDARY** due to iodine and particulate radionuclides in gaseous release, r, discharged from the site during the time interval of interest

3.17E-8 = The conversion constant, 3.17E-8, represents the inverse of the number of seconds in a year.

W_v = the dispersion parameter for estimating the dose to an individual at the controlling location for long term releases, and may assume one of two values as described below

W_v is x/Q for the inhalation pathway (2.2E-6 sec/cubic meter)

W_v is D/Q for the food and ground plane pathways (meters^{-2})

D/Q = the dispersion parameter at the controlling location for long term releases (meters^{-2})

The value for D/Q has been determined to be 8.63E-10 m^{-2}.[2]

The grass-cow-milk pathway is the controlling pathway.[3]

The controlling sector is the south-southwest sector.

The controlling location is at a distance of 4800 meters.[3]

R_{ipao} = the dose factor for each identified iodine or particulate radionuclide, i, exposure pathway, p, receptor age group, a, and organ, o (m^2 mrem/year per microcuries/second or mrem/year per microcuries/cubic meter)

dose factors have been derived for the following pathways

1) inhalation - see Attachment 12
2) ground plane - see Attachment 12
3) grass-cow-milk - see Attachment 12
4) grass-cow-meat - see Attachment 12
5) vegetation - see Attachment 12

The inhalation pathway dose factors were obtained using the formula from NUREG-0133, 5.3.1.1.

The ground plane dose factors were obtained using the formula from NUREG-0133, 5.3.1.2.

---

1 Equation 25G has been derived from NUREG-0133, 5.3.1.
2 See CP-607, Revision 2 section 3.4.3.
3 See the "Land Use Survey", 1990.

The grass-cow-milk pathway dose factors were obtained using the formula from NUREG-0133, 5.3.1.3.

The grass-cow-meat pathway dose factors were obtained using the formula from NUREG-0133, 5.3.1.4.

The vegetation pathway dose factors were obtained using the formula from NUREG-0133, 5.3.1.5.

Q'_{ir} = the total (time averaged) activity of iodine or particulate radionuclide, i, in gaseous release, r, discharged during the specified time interval (microcuries)

At CCNPP, all releases are considered long term releases.

Calculate the values of Q_{ir} for each release in accordance with equation 19G.

TOTAL (TIME AVERAGED) ACTIVITY OF IODINE OR PARTICULATE NUCLIDE i IN GASEOUS RELEASE r

$$Q'_{ir} = (A_{ir})(F_r)(t_{ir})(c') \qquad \text{Eq. 19G}$$

A_{ir} = the specific activity of iodine and particulate radionuclide, i, in release, r, discharged during the time interval of interest (microcuries/cubic centimeter)

F_r = the discharge flow rate for release, r, discharged during the time interval of interest (cubic meters per second)

If the discharge flow rate is unknown (e.g., the gaseous radwaste has not been released), the "Maximum Discharge Flow Rate" listed on Attachments 7 or 8 may be used to calculate the average activity for nuclide i.

Additional guidance for calculating discharge flow rates may be contained in approved CHEMISTRY SECTION procedures.

t_{ir} = the duration of the gaseous radwaste release (seconds)

c' = a conversion constant, 1E6 cubic centimeters per cubic meter

---

(3) In the event a computer system and the appropriate software are unavailable, a simplified equation may be used to calculate the organ doses due to individual gaseous releases.

(4) The simplified method is presented below.

d) simplified method

(1) If a computer system and appropriate software are NOT available to perform the rigorous organ dose calculations described in the previous section, the organ doses due to iodines and particulates in a single release of radioactive gases discharged to an **UNRESTRICTED AREA** may be calculated in accordance with equation 26G.

DOSE TO ORGAN, o, FROM IODINES AND PARTICULATES IN GAS RELEASE, r (SIMPLIFIED EQUATION)

$$D_{maxor} = [(3.17E\text{-}8)(W_v)(R_{I\text{-}131})/K_{sf}]\Sigma(Q'_{Ir}) \qquad \text{Eq. 26G}^1$$

D_{maxor} = the maximum dose to any organ, o, due to iodines and particulates contained in any single release, r, of radioactive gases to an **UNRESTRICTED AREA**

3.17E-8 = The conversion constant, 3.17E-8, represents the inverse of the number of seconds in a year.

D/Q = the dispersion parameter at the controlling location for long term releases (meters^{-2})

The value for D/Q has been determined to be 8.63E-10 m^{-2}.[2]

The grass-cow-milk pathway is the controlling pathway.[3]

The controlling sector is the south-southwest sector.

The controlling location is at a distance of 4800 meters.[3]

$R_{I\text{-}131}$ = the infant, thyroid, dose factor for I-131 via the grass-cow-milk pathway (m^2 mrem/year per microcuries/second)

This value is 1.05E12 and it is listed on Attachment 12.

K_{sf} = a constant, actually a safety factor, which is the ratio of the CCNPP organ dose limit to the organ dose limit of Control 3.11.2.3, (unitless)

The safety factor chosen shall be less than or equal to 1.00. This ensures the organ dose is always less than or equal to the organ dose limit of Control 3.11.2.3.

A safety factor of 1.00 will yield an organ dose which corresponds to the organ dose limit of Control 3.11.2.3.

A safety factor of 0.500 will yield an organ dose which corresponds to one-half the organ dose limit of Control 3.11.2.3.

It is recommended that a safety factor of 1.0 be used for calculating the organ dose, however, other values--not to exceed 1.00--may be used as directed by the General Supervisor Chemistry.

The particular value selected for the safety factor is somewhat arbitrary, however a safety factor does provide plant personnel with a degree of administrative control over the use of simplified equations for generating radioactive gaseous release permits. This administrative control is designed to minimize the possibility of violating Control 3.11.2.3 when simplifying assumptions are used.

---

1 Equation 26G has been derived from NUREG-0133, 5.3.1.
2 See CP-607, Revision 2 section 3.4.3.
3 See the "Land Use Survey", 1990.

The use of a safety factor is consistent with the ALARA philosophy that licensees should make every reasonable effort to maintain radiation exposures, and releases of radioactive materials in effluents to **UNRESTRICTED AREAS**, as low as is reasonably achievable.

This safety factor has been included in equation 26G to account for any potential nonconservatism associated with applying the infant, thyroid, grass-cow-milk dose factor, $R_{I\text{-}131}$, to all radionuclides identified in the gaseous release. Such nonconservatism could conceivable be present whenever radionuclides having a pathway dose factor greater than $R_{I\text{-}131}$ are present in a gaseous release.

Q'_{ir} = the total (time averaged) activity of iodine or particulate radionuclide, i, in gaseous release, r (microcuries)

At CCNPP, all releases are considered long term releases.

This value shall be calculated in accordance with equation 19G.

TOTAL (TIME AVERAGED) ACTIVITY OF IODINE OR PARTICULATE NUCLIDE i IN GASEOUS RELEASE r

$$Q'_{ir} = (A_{ir})(F_r)(t_{ir})(c') \qquad \text{Eq. 19G}$$

A_{ir} = the specific activity of iodine and particulate radionuclide, i, in release, r, discharged during the time interval of interest (microcuries/cubic centimeter)

F_r = the discharge flow rate for release, r, discharged during the time interval of interest (cubic meters per second)

If the discharge flow rate is unknown (e.g., the gaseous radwaste has not been released), the "Maximum Discharge Flow Rate" listed on Attachments 7 or 8 may be used to calculate the average activity for nuclide i.

Additional guidance for calculating discharge flow rates may be contained in approved CHEMISTRY SECTION procedures.

t_{ir} = the duration of the gaseous radwaste release (seconds)

c' = a conversion constant, 1E6 cubic centimeters per cubic meter

e) Once the calculations above have been completed, the calculation results are compared to the applicable limits and corrective actions are initiated as described below.

7. Corrective actions

a) CHEMISTRY SECTION surveillance procedures shall contain/and or reference administrative and/or Control limits for cumulative organ dose for gaseous effluents and shall specify corrective actions to be initiated when these limits are exceeded.

b) Refer to Control 3.11.2.3 for actions to be taken in the event the calculated cumulative gamma air doses exceed any of the radiological effluent controls listed above.

LIMITS FOR THE GASEOUS RADWASTE PROCESSING SYSTEM

1. Introduction

   a) 10 CFR 50.36a requires licensees to maintain and use the equipment installed in the gaseous waste processing system for the purpose of controlling effluents to the environment.

   b) Radiological effluent controls have been established to implement the requirements of 10 CFR 50.36a.

   c) These radiological effluent controls are described below.

2. Radiological effluent controls

   a) The **GASEOUS RADWASTE PROCESSING SYSTEM** and the **VENTILATION EXHAUST PROCESSING SYSTEM** shall be used to reduce radioactive materials in gaseous waste prior to their discharge when the gaseous effluent air dose, to areas at and beyond the **SITE BOUNDARY**, exceeds 1.20 mrads gamma radiation in a 92 day period (per Control 3.11.2.4).

   b) The **GASEOUS RADWASTE PROCESSING SYSTEM** and the **VENTILATION EXHAUST PROCESSING SYSTEM** shall be used to reduce radioactive materials in gaseous waste prior to their discharge when the gaseous effluent air dose, to areas at and beyond the **SITE BOUNDARY**, exceeds 2.4 mrads beta radiation in a 92 day period (per Control 3.11.2.4).

   c) The **VENTILATION EXHAUST PROCESSING SYSTEM** shall be used to reduce the quantity of radioactive materials in gaseous waste prior to their discharge when the calculated doses due to gaseous effluent releases, to areas at and beyond the **SITE BOUNDARY** exceeds 1.80 mrem to any organ in a 92 day period (per Control 3.11.2.4).

   d) The routine surveillances which are performed to verify compliance with this radiological effluent controls are described below.

3. Surveillance Requirement(s)

   a) The cumulative gamma air dose, for the previous 92 days, due to noble gases in gaseous effluents, shall be determined at least once every 31 days (Control 4.11.2.2).

   b) The plant group(s) responsible for performing the required surveillance(s) are identified below.

4. Responsible Plant Organizations

   a) The CHEMISTRY SECTION is responsible for calculating the cumulative gamma air doses for the current calendar month, the previous 92 days, the current calendar quarter, and the current calendar year.

b) The cumulative gamma air dose for the previous 92 days is calculated whenever the appropriate initiating conditions are present

c) These initiating conditions are contained in the following section.

5. Initiating conditions

a) For a listing of initiating conditions associated with calculating gamma air doses, see "Initiating Conditions" in the section of the ODCM titled, "Cumulative Gamma Air Doses Due To Noble Gases In Gaseous Effluents."

b) For a listing of initiating conditions associated with calculating beta air doses, see "Initiating Conditions" in the section of the ODCM titled, "Cumulative Beta Air Doses Due To Noble Gases In Gaseous Effluents."

c) For a listing of initiating conditions associated with calculating cumulative organ doses, see "Initiating Conditions" in the section of the ODCM titled, "Cumulative Organ Doses Due To Iodines And Particulates In Gaseous Effluents."

6. Calculation methodology

a) Calculate the previous 92-day cumulative gamma air dose as described in the section "Cumulative Gamma Air Doses Due To Noble Gases In Gaseous Effluents."

b) Calculate the previous 92-day cumulative beta air dose as described in the section "Cumulative Beta Air Doses Due To Noble Gases In Gaseous Effluents."

c) Calculate the previous 92-day cumulative organ dose as described in the section "Cumulative Organ Doses Due To Iodines And Particulates In Gaseous Effluents."

7. Corrective actions

a) CHEMISTRY SECTION surveillance procedures shall contain/and or reference administrative and/or Control limits for 92-day cumulative gamma, beta, or organ doses for gaseous effluents and shall specify corrective actions to be initiated when these limits are exceeded.

b) Refer to Control 3.11.2.4 for actions to be taken in the event the calculated 92-day cumulative gamma air, beta air, or organ doses exceed any of the radiological effluent controls listed above.

LIMITS ON TOTAL ANNUAL DOSE -- GASES, LIQUIDS, AND URANIUM FUEL CYCLE SOURCES

1. Introduction

   a) 40 CFR 190 specifies annual dose limits for radionuclides released to the environment.

   b) Radiological effluent controls have been established to implement the requirements of 40 CFR 190.

   c) These radiological effluent controls are described below.

2. Radiological effluent controls

   a) The total body dose from exposure to the combination of liquid releases, gas releases, and uranium fuel cycle sources shall be less than 25 mrem for the current calendar year (per Control 3.11.4).

   b) The organ dose (for the maximum exposed organ, not including the thyroid) from exposure to the combination of liquid releases, gas releases, and uranium fuel cycle sources shall be less than 25 mrem for the current calendar year (per Control 3.11.4).

   c) The thyroid dose from exposure to the combination of liquid releases, gas releases, and uranium fuel cycle sources shall be less than 75 mrem for the current calendar year (per Control 3.11.4).

   d) The routine surveillances which are performed to verify compliance with these radiological effluent controls are described below.

3. Surveillance Requirements

   a) The cumulative gamma air doses, for current calendar month, the current calendar quarter, and the current calendar year, due to noble gases in gaseous effluents, shall be determined at least once every 31 days (Control 4.11.2.2).

   b) The cumulative organ doses (due to iodines and particulates in gaseous waste discharged to **UNRESTRICTED AREAS**), for the current calendar month, the current calendar quarter, and the current calendar year, shall be determined at least once every 31 days in accordance with the ODCM (per Control 4.11.2.3).

   c) Cumulative total body dose to **MEMBERS OF THE PUBLIC** in **UNRESTRICTED AREAS**--for the current calendar month, the calendar quarter, and the current calendar year--shall be calculated at least once per 31 days (per Control 4.11.1.2).

   d) Cumulative organ doses to **MEMBERS OF THE PUBLIC** in **UNRESTRICTED AREAS**--for the current calendar month, the current calendar quarter, and the current calendar year--shall be calculated at least once per 31 days (per Control 4.11.1.2).

   e) The direct radiation dose to **MEMBERS OF THE PUBLIC** exposed to uranium fuel cycle sources (i.e., reactor units and outside storage tanks) shall be determined IF THE APPROPRIATE INITIATING CONDITIONS ARE PRESENT.

4. Responsible Plant Organization(s)

   a) The CHEMISTRY SECTION is responsible for implementing the effluent surveillances required by Control 4.11.4.1.

   b) The CHEMISTRY SECTION is responsible for ensuring implementation of the direct radiation surveillances required by Control 4.11.4.2.

   c) IT SHOULD BE NOTED THAT NO SURVEILLANCES NEED BE PERFORMED UNLESS THE APPROPRIATE INITIATING CONDITIONS ARE PRESENT.

   d) These initiating conditions are contained in the following section.

5. Initiating conditions

   a) The total dose from liquid releases, gas releases, and uranium fuel cycle sources shall be determined whenever the calculated doses from **liquid effluents** exceed any of the following (per Control 4.11.4.2):

      (1) Six (6) mrem per quarter to the total body

      (2) Twelve (12) mrem per calendar year to the total body

      (3) Twenty (20) mrem per quarter to any organ

      (4) Forty (40) mrem per calendar year to any organ

   b) The total dose from liquid releases, gas releases, and uranium fuel cycle sources shall be determined whenever the calculated air doses from noble gasses in **gaseous effluents** exceed any of the following (per Control 4.11.4.2):

      (1) Twenty (20) mrad gamma per quarter

      (2) Forty (40) mrad gamma per calendar year

      (3) Forty (40) mrad beta per quarter

      (4) Eighty (80) mrad beta per calendar year

   c) The total dose from liquid releases, gas releases, and uranium fuel cycle sources shall be determined whenever the calculated organ doses from iodines and particulates in **gaseous effluents** exceed any of the following (per Control 4.11.4.2):

      (1) Thirty (30) mrem per quarter to any organ

      (2) Sixty (60) mrem per calendar year to any organ

   d) Whenever the correct initiating conditions are present, the total doses from liquid releases, gas releases, and uranium fuel cycle sources (for the calendar year) shall be calculated as shown below.

6. Calculation methodology

   a) The total body dose and the organ doses from liquid releases, gas releases, and uranium fuel cycle sources (for the calendar year) shall be calculated in accordance with equation 1T and 2T respectively.

TOTAL, TOTAL BODY DOSE FROM LIQUID RELEASES, GAS RELEASES, AND URANIUM FUEL CYCLE SOURCES

$$D_{tball} = D_{ToL} + D_{gt} + D_{tank} \quad \text{Eq. 1T}$$

TOTAL ORGAN DOSES FROM LIQUID RELEASES, GAS RELEASES, AND URANIUM FUEL CYCLE SOURCES

$$D_{oall} = D_{ToL} + D_{ot} + D_{tank} \quad \text{Eq. 2T}$$

D_{tball} = the dose (mrem) to total body resulting from the combination of all gas releases, all liquid releases, and all uranium fuel cycle sources.

D_{oall} = the dose (mrem) to organ, o, resulting from the combination of all gas releases, all liquid releases, and all uranium fuel cycle sources.

Separate values shall be calculated for each of the organs listed below:

1. bone
2. liver
3. thyroid
4. kidney
5. lung
6. GI tract

D_{ToL} = the cumulative dose (mrem) to organ, o, for all liquid releases discharged in a given time interval

Calculate this value as specified by equation 8L.

D_{gt} = the site-boundary cumulative gamma air dose (mrad) due to noble gas radionuclides contained in all gaseous radwaste discharged from the site during the time interval, t

Calculate this value as specified by equation 17G, except substitute K_i for M_i (see Attachment 10).

D_{ot} = the site-boundary cumulative organ dose (mrem) resulting from the release of iodine and particulate radionuclides in gaseous releases from the site

Calculate this value as specified by equation 24G.

D_{tank} = the calendar-year cumulative dose (mrem) to the maximum exposed MEMBER OF THE PUBLIC due to direct radiation from the reactor units and outside storage tanks

This value shall be based on the results of direct radiation measurements from TLDs or continuous dose rate instruments placed near the **SITE BOUNDARY** (e.g., from radiological environmental monitoring sites DR1-DR9 described on Attachment 13 and shown on Attachment 13).

The CHEMISTRY SECTION, and the Radiation Safety Section are responsible for determining this value.

b) Compare the calculated values to the radiological effluent controls (listed in this section), and if any of the radiological effluent controls have been exceeded, perform the appropriate corrective actions listed below.

7. Corrective actions

a) CHEMISTRY SECTION surveillance procedures shall contain/and or reference administrative and/or Control limits for total dose for liquid releases, gaseous releases, and uranium fuel cycle sources and shall specify corrective actions to be initiated when these limits are exceeded.

b) Refer to Control 3.11.4 for actions to be taken in the event the total dose exceeds any of the radiological effluent controls listed above.

c) If any of the radiological effluent controls have been exceeded, refer to 40 CFR 302, Appendix B, and verify the quantities of radioactive materials released are less than the values specified. **[375B]**

SPECIAL EXCEPTIONS AND ASSUMPTIONS FOR CALCULATION OF DOSES AND DOSE RATES

1. Camp Conoy

   a) Location

      (1) Camp Conoy is located within the **SITE BOUNDARY**.

      (2) Camp Conoy is located in the SE sector.

      (3) Camp Conoy is approximately 3000 feet from the plant.

   b) Occupancy

      (1) Camp Conoy is frequently visited by **MEMBERS OF THE PUBLIC**.

      (2) Maximum occupancy for **MEMBERS OF THE PUBLIC** at Camp Conoy is restricted to approximately 3380 hours per year.

   c) Meteorology

      (1) The highest historical annual average x/Q for Camp Conoy is 2.40E-6 seconds per cubic meter.[1]

   d) Dose calculation assumptions

      (1) Based on sections (b) and (c) above, any actual exposure to a MEMBER OF THE PUBLIC at Camp Conoy will be less than the calculated exposure for a MEMBER OF THE PUBLIC at the **SITE BOUNDARY**.[1]

      (2) No special considerations are required for addressing potential exposure at Camp Conoy.

2. Visitor's Center

   a) Location

      (1) The Visitor's Center is located within the **SITE BOUNDARY**.

      (2) The Visitor's Center is located in the WNW sector.

      (3) The Visitor's Center is approximately 1000 feet from the plant.

   b) Occupancy

      (1) The Visitor's Center is frequently visited by **MEMBERS OF THE PUBLIC**.

      (2) Maximum occupancy for **MEMBERS OF THE PUBLIC** at The Visitor's Center is restricted to daylight hours.

---

[1] See CP-607, Revision 2 page 24.

c) Meteorology

(1) The highest historical annual average x/Q for the Visitor's Center is 8.68E-6 seconds per cubic meter.[1]

(2) The wind frequency for the WNW sector, based on 1983 meteorological data, is four percent (4%).[1]

d) Dose calculation assumptions

(1) "Using a conservative basis of 10% wind frequency, and individual visiting the center for 330 hours/year during the periods of worst case meteorological conditions would be most highly exposed."[1]

(2) The dose calculated for the controlling **SITE BOUNDARY** is more conservative by a factor of 7.[1]

(3) Based on sections (b) and (c) above, any actual exposure to a MEMBER OF THE PUBLIC at The Visitor's Center will be less than the calculated exposure for a MEMBER OF THE PUBLIC at the **SITE BOUNDARY**.

(4) No special considerations are required for addressing potential exposure at The Visitor's Center.

---

1 See CP-607, Revision 2 page 24.

RADIOLOGICAL ENVIRONMENTAL MONITORING PROGRAM[1]

1. Introduction

   a) 10 CFR 50, Appendix I, Section IV.B.2 requires licensees to establish an environmental surveillance and monitoring program for the purpose of evaluating the relationship between quantities of radioactive material released in effluents and resultant radiation doses to individuals.

   b) Radiological environmental controls have been established to implement the requirements of 10 CFR 50, Appendix I, Section IV.B.2.

   c) These radiological environmental controls are described below.

2. Controls on the Radiological Environmental Monitoring Program (REMP)

   a) The REMP shall consist of environmental sample locations, analysis parameters, analysis frequencies, detection limits, and **ACTION** levels all of which conform to the requirements of Control 3.12.1. (See Attachment 13, 14, 15, 16, and 17).

   b) The REMP shall maintain a map showing sample locations near the **SITE BOUNDARY** in accordance with Control 3.12.1. (See Attachment 18).

   c) The REMP shall maintain a map showing sample locations within a 8 km. radius of the plant in accordance with Technical Specification 5.6.2. (See Attachment 19).

3. Surveillance Requirements

   a) Surveillances for direct radiation

      (1) Direct radiation dosimetry shall be collected from locations DR1-DR23 listed on Attachment 13.

      (2) In the event any of the monitoring stations, DR1-DR23, described on Attachment 13 become unavailable, establish new monitoring stations (with new dosimetry) as described below:

         (a) In lieu of any location DR1-DR9 described on Attachment 13, establish a new monitoring station in the same meteorological sector in the general area of the **SITE BOUNDARY**.

         (b) In lieu of any location DR10-DR18 described on Attachment 13, establish a new monitoring station in the same meteorological sector in the 6-8 km range from the site.

---

[1] This portion of the environmental monitoring program is designed to monitor the environment surrounding the CCNPP. A separate environmental monitoring program designed to monitor the environment surrounding the Independent Spent Fuel Storage Installation is described elsewhere in the ODCM.

(c) In lieu of any location DR19-DR23 described on Attachment 13, establish a new monitoring station in either a special interest area (e.g., population center, nearby residence, school) or a control station whichever is applicable.

(3) In the event any dosimetry at an existing monitoring location DR1-DR23 becomes unavailable, place new dosimetry at the monitoring station.

(4) Analyze the dosimeters at the frequencies and for the parameters identified on Attachment 14.

(5) The sampling locations(s), excluding the control station location, having the lowest calculated dose or dose commitment(s), via the same exposure pathway, may be deleted from the RADIOLOGICAL ENVIRONMENTAL MONITORING PROGRAM after October 31 of the year in which the land use census was conducted in accordance with Control 3.12.2.b.

b) Surveillances for airborne activity

(1) Radioiodine and particulate samples shall be collected from locations A1-A5 listed on Attachment 13.

(2) In the event any of the monitoring stations, A1-A5, described on Attachment 13 become unavailable, establish new monitoring station(s) (fitted with new radioiodine and particulate samplers) as described below:

(a) In lieu of any location A1-A3 described on Attachment 13, establish a new monitoring station in the general area of the **SITE BOUNDARY**, such that the three monitoring stations are located in the meteorological sectors with the three highest calculated annual average ground level D/Q.

(b) In lieu location A4 described on Attachment 13, establish a new monitoring station near a community having the highest calculated annual average ground level D/Q.

(c) In lieu of location A5 described on Attachment 13 establish a new "control" location 15 to 30 kilometers from the plant in the least prevalent wind direction.

(3) In the event any radioiodine cartridge or particulate filter becomes unavailable from an existing monitoring location A1-A5 described on Attachment 13, place new radioiodine cartridge or particulate filter in the air sampler at the monitoring station.

(4) Analyze the samples at the frequencies and for the parameters identified on Attachment 15.

(5) The sampling locations(s), excluding the control station location, having the lowest calculated dose or dose commitment(s), via the same exposure pathway, may be deleted from the RADIOLOGICAL ENVIRONMENTAL MONITORING PROGRAM after October 31 of the year in which the land use census was conducted in accordance with Control 3.12.2.b.

c) Surveillances of waterborne activity

(1) Water and sediment samples shall be collected from the locations Wa1, Wa2, and Wb1 listed on Attachment 13.

(2) In the event any of the samples at Wa1, Wa2, or Wb1 are unavailable, collect substitute samples as described below:

(a) In lieu of a liquid sample at Wa1, collect a substitute sample of surface water from the intake area.

(b) In lieu of a liquid sample at Wa2, collect a substitute sample of surface water from the discharge area.

(c) In lieu of sample at Wb1, collect a substitute sample of sediment from a downstream shoreline with existing or potential recreational value.

(3) Analyze the samples at the frequencies and for the parameters identified on Attachment 16.

(4) The sampling locations(s), excluding the control station location, having the lowest calculated dose or dose commitment(s), via the same exposure pathway, may be deleted from the RADIOLOGICAL ENVIRONMENTAL MONITORING PROGRAM after October 31 of the year in which the land use census was conducted in accordance with Control 3.12.2.b.

d) Surveillances for ingestible activity

(1) Fish/invertebrate, milk, and food product samples shall be collected from the locations Ia1 thru Ia6 and Ib1 thru Ib9 listed on Attachment 13.

(2) In the event any of the samples at Ia1 thru Ia6 or Ib1 thru Ib9 are unavailable, collect substitute samples as described below:

(a) In lieu of samples at Ia1 thru Ia3, collect substitute three commercially and/or recreationally important species (two fish species and one invertebrate species) from the vicinity of the plant discharge area.

(b) In lieu of samples at Ia4 thru Ia6, collect three commercially and/or recreationally important species (two fish species and one invertebrate species) from an area not influenced by plant discharges.

(c) In lieu of samples at Ib1 thru Ib6, collect three kinds of broad leaf vegetation grown near the **SITE BOUNDARY** at two different locations of highest average ground level D/Q[1].

(d) In lieu of samples at Ib7 thru Ib9, collect one sample each of the similar broad leaf vegetation grown 15-30 km distant in the least prevalent wind direction.

(3) Analyze the samples at the frequencies and for the parameters identified on Attachment 17.

(4) The sampling locations(s), excluding the control station location, having the lowest calculated dose or dose commitment(s), via the same exposure pathway, may be deleted from the Radiological Environmental Monitoring Program after October 31 of the year in which the land use census was conducted in accordance with Control 3.12.2.b.

4. Responsible Company Organizations

a) The CHEMISTRY SECTION, CCNPPI is responsible for ensuring performance of the surveillances listed above.

5. Initiating conditions

a) Collect samples in accordance with the frequencies specified on Attachments 14, 15, 16, and 17.

b) Analyze samples in accordance with the frequencies specified on Attachments 15, 16, and 17.

c) Calculate the potential annual doses in accordance with the methodology outlined below if any of the following conditions are true:

(1) any of the above surveillance results reveal levels of environmental activity greater than the **ACTION** Levels specified on Attachments 15, 16, 17 (per Control Table 3.12-2)

(2) any radionuclides other than those in Attachments 15, 16, and 17 are detected, and the radionuclides are the result of plant effluents.

d) The REMP Manager is responsible for notifying the General Supervisor--Chemistry, CCNPP, if any of the following conditions are true:

---

[1] With fresh leafy vegetable samples unavailable from one or more of the sample locations listed on Attachment 13, perform corrective actions specified by Control 3.12.1.c.

(1) any of the above surveillance results reveal levels of environmental activity greater than the **ACTION** Levels specified on Attachments 15, 16 17 (per Control Table 3.12-2)

(2) any radionuclides other than those in Attachments 15, 16, and 17 are detected, and the radionuclides are the result of plant effluents, and the potential annual doses due to the radionuclides are greater than the calendar year limits of Controls 3.11.1.2, 3.11.2.2, and 3.11.2.3.

6. Calculation methodology

a) If the correct initiating conditions, as described above, are present, calculate potential annual doses for the pathway of interest in accordance with the methodologies contained in ODCM, or

b) if methodologies other than those listed in the ODCM are used to calculate potential annual doses, such methodologies shall be documented in the AREOR in accordance with Control 3.12.1.b.

7. Corrective **ACTIONS**

a) If a sample is unobtainable due to sampling equipment malfunction, then attempt to restore equipment to operable status before the end of the next sampling period, and document in the AREOR (per Control 4.12.1, Table 3.12-1, notation "a").

b) If the RADIOLOGICAL ENVIRONMENTAL MONITORING PROGRAM is not being conducted in accordance with Attachments 13, 14, 15, 16, or 17 document deviations in the AREOR (per Control 3.12.1.a).

c) With fresh leafy vegetable samples unavailable from one or more of the sample locations listed on Attachment 13, establish a new monitoring location and document applicable information in the AREOR (per Control 3.12.1.c).

d) When the analysis result for any parameter exceeds the **ACTION** Level listed on Attachments 15, 16, or 17, submit a Special Report to the NRC (per Control 3.12.1.b).

e) When radionuclides other than those listed on Attachments 15, 16, and 17 are detected; and if those radionuclides are the result of plant effluents; and if the potential annual doses due to the radionuclides are greater than the calendar year limits of Controls 3.11.1.2, 3.11.2.2, and 3.11.2.3; submit a Special Report in accordance with Control 3.12.1.b.

LAND USE CENSUS

1. Introduction

   a) 10 CFR 50, Appendix I, Section IV.B.3 requires licensees to identify changes in the use of **UNRESTRICTED AREAS** in order to permit modifications in monitoring programs.

   b) Radiological environmental controls have been established to implement the requirements of 10 CFR 50, Appendix I, Section IV.B.3.

   c) These radiological environmental controls are described below.

2. Controls on the Land Use Census

   a) Identify the location of the nearest milk animal, within a distance of 8 km of the plant site, in each of the 9 meteorological sectors (per Control 3.12.2).

   b) Identify the location of the nearest residence, within a distance of 8 km of the plant site, in each of the 9 meteorological sectors (per Control 3.12.2).

   c) Identify the location of the nearest garden, within a distance of 8 km of the plant site, in each of the 9 meteorological sectors; or if the garden census was not conducted, obtain samples of three different kinds of broad leaf vegetation from the **SITE BOUNDARY** in two different meteorological sectors which have the highest predicted **SITE BOUNDARY** D/Q (per Control 3.12.2).

3. Surveillance Requirement(s)

   a) Perform a land use census that will provide the best results. Example methods may include, but are not limited to, the following:

      (1) door-to-door surveys

      (2) aerial views

      (3) consult local agricultural authorities

   b) Document the results of the land use census in the Annual Radiological Environmental Operating Report in accordance with Technical Specification 5.6.2.

   c) Perform an Independent Technical Review of the land use census data.

4. Responsible Company Organizations

   a) The Chemistry Section, CCNPPI, is responsible for ensuring the performance of the surveillances listed above.

5. Initiating conditions

   a) Conduct the land use census during the growing season, and conduct the land use census at least once per 12 months.

6. Calculation methodology

   a) Calculate doses for the pathways of interest in accordance with the methodologies contained in Regulatory Guide 1.109, or

   b) if methodologies other than those listed in Regulatory Guide 1.109 are used to calculate doses, such methodologies should be documented in the Annual Radiological Environmental Operating Report.

7. Corrective actions

   a) The results of the land use census shall be used to determine the RADIOLOGICAL ENVIRONMENTAL MONITORING Programs sample locations identified on Attachment 13.

   b) If the land use census has identified a location(s) that yields a calculated dose or dose commitment greater than the values currently being calculated in Control 4.11.2.3, perform the following activities.

      (1) Document the new location(s) in the next Annual Radiological Environmental Operating Report in accordance with Technical Specification 5.6.2, and

      (2) revise the figures and tables in the ODCM to reflect the new location(s).

   c) If the land use census has identified a location(s) that yields a calculated dose or dose commitment (via the same exposure pathway) which is 20% greater than the equivalent location identified on Attachment 13, perform the following activities.

      (1) Add the new location(s) to the RADIOLOGICAL ENVIRONMENTAL MONITORING PROGRAM within 30 days,

      (2) document the new location(s) in the next Annual Radiological Environmental Operating Report in accordance with Technical Specification 5.6.2, and

      (3) revise the figures and tables in the ODCM to reflect the new location(s).

INTERLABORATORY COMPARISON PROGRAM

1. Introduction

   a) 10 CFR 50, Appendix I, Section IV.B.2 requires licensees to establish an environmental surveillance and monitoring program for the purpose of evaluating the relationship between quantities of radioactive material released in effluents and resultant radiation doses to individuals.

   b) Radiological environmental controls have been established to ensure that independent checks on the precision and accuracy of the measurements of radioactive material in environmental sample matrices are performed as part of the quality assurance program for environmental monitoring.

   c) These radiological environmental controls are described below.

2. Controls on the Interlaboratory Comparison Program

   a) Analyze INTERLABORATORY COMPARISON PROGRAM samples supplied by either the Commission or a Commission approved laboratory for all parameters listed on Attachments 15, 16, and/or 17, as applicable[1] (per Control 3.12.3).

3. Surveillance Requirement(s)

   a) A summary of the results obtained as part of the Interlaboratory Comparison Program shall be included in the Annual Radiological Environmental Operating Report pursuant to Technical Specification 5.6.2.

   b) This section of the ODCM shall describe the Interlaboratory Comparison Program.

4. Responsible Company Organizations

   a) The CHEMISTRY SECTION, CCNPPI, is responsible for ensuring performance of the surveillances listed above.

5. Initiating conditions

   a) Analyze INTERLABORATORY COMPARISON PROGRAM samples whenever they are supplied by either the Commission or a Commission approved laboratory.

6. Calculation methodology

   a) Analysis methods and calculational methodologies used to satisfy the above surveillances shall be documented in approved procedures.

7. Corrective actions

   a) If analyses are not performed as required, document actions taken to prevent reoccurrence in the Annual Radiological Environmental Operating Report (AREOR) pursuant to Technical Specification 5.6.2.

---

[1] Since no Commission approved laboratory supplies TLDs as part of a comparison program, no TLDs are analyzed as part of the INTERLABORATORY COMPARISON PROGRAM.

ANNUAL RADIOLOGICAL ENVIRONMENTAL OPERATING REPORT

1. Introduction

   a) 10 CFR 50, Appendix I, Section IV.B.2 requires licensees to provide data on measurable levels of radiation and radioactive materials in the environment.

   b) Radiological environmental controls have been established to implement the requirements of 10 CFR 50, Appendix I, Section IV.B.2.

   c) These radiological environmental controls are described below.

2. Controls on the Annual Radiological Environmental Operating Report (AREOR)

   a) The AREOR shall include a summary description of the radiological environmental monitoring program (REMP).

   b) The AREOR shall include a summary description of the Independent Spent Fuel Storage Installation Monitoring Program (ISFSIMP).

   c) The AREOR shall include a table similar to Attachment 13 which states the distance and direction from the central point between the two containment buildings to each of the REMP sample points.

   d) The AREOR shall include a table similar to Attachment 20 which states the distance and direction from the central point of the ISFSI to each of the ISFSIMP sample points.

   e) The AREOR shall include summaries, interpretations, and an analysis of trends of the results of the radiological environmental surveillance activities for the report period.

   f) The AREOR shall include a comparison between the annual REMP results and the Radiological Environmental Operating Report preoperational studies.

   g) The AREOR shall include a comparison between the annual ISFSIMP results and Radiological Environmental Operating Report pre-fuel-load studies.

   h) The AREOR shall include a comparison with operational controls as appropriate.

   i) The AREOR shall include a comparison with the previous environmental surveillance reports.

   j) The AREOR shall include an assessment of the observed impacts of plant operation on the environment.

   k) The AREOR shall include an assessment of the observed impacts of ISFSI operation on the environment.

   l) The AREOR shall include the results of the land use censuses required by Control 3.12.2.

m) The AREOR shall include the results of analysis of all radiological environmental samples taken during the period pursuant to the locations specified on Attachments 13 and 20.

n) The AREOR shall include the results of all environmental radiation measurements taken during the period pursuant to the locations specified on Attachments 13 and 20.

o) The AREOR shall include summarized and tabulated results--in the format of the table in the Radiological Assessment Branch Technical Position, Revision 1, November 1979--of analysis of all radiological environmental samples taken during the period pursuant to the locations specified on Attachments 13 and 20.

p) The AREOR shall include summarized and tabulated results--in the format of the table in the Radiological Assessment Branch Technical Position, Revision 1, November 1979--of all environmental radiation measurements taken during the period pursuant to the locations specified on Attachments 13 and 20.

q) The AREOR shall include an explanation for missing results, if some individual results (as described in the above paragraph) are not available for inclusion with the report.

r) The AREOR shall include any data which was missing from previous reports.

s) The AREOR shall include at least two legible maps[1] covering all REMP sampling locations keyed to a table giving distances and directions from the central point between the two containment buildings.

t) The AREOR shall include at least one legible map covering all ISFSIMP sampling locations keyed to a table giving distances and directions from the central point of the ISFSI.

u) The AREOR shall include results of the licensee participation in the INTERLABORATORY COMPARISON PROGRAM required by Control 3.12.3.

v) The AREOR shall include a discussion of all deviations from the sampling schedules listed on Attachments 14, 15, 16, and 17, and specify the reason(s) for the deviations, and the plan for preventing recurrence.

w) The AREOR shall include a discussion of all analyses in which the LLD listed on Attachments 15, 16, and 17 (and required by Control Table 4.12-1) was not achievable.

x) The AREOR shall include the identification of the cause of unavailability of samples (if any), and describe the locations used for replacement samples.

y) The AREOR shall include any permanent changes in the sample locations in the monitoring program.

---

[1] One map shall cover stations near the SITE BOUNDARY; a second shall include the more distant stations.

z) The AREOR shall include revised figure(s) (e.g., like Attachments 18 and 19) and tables (e.g., like Attachment 13) for the ODCM which reflect any new REMP sample location(s).

aa) The AREOR shall include revised figure(s) (e.g., like Attachments 21 and 22) and table(s) (e.g., like Attachment 20) for the ODCM which reflect any new ISFSIMP sample location(s).

bb) The AREOR shall receive an independent review for technical content prior to submittal to the NRC.

cc) Material provided in the AREOR shall be consistent with the objectives outlined in the ODCM and 10 CFR 50, Appendix I, Section IV.3.2, IV.3.3 and IV.C.

3. Surveillance Requirement(s)

a) Write the Annual Radiological Environmental Operating Report covering the previous calendar year's operation of the reactor units.

4. Responsible Company Organizations

a) The Chemistry Section, CCNPPI, is responsible for ensuring the performance of the surveillances listed above[1].

5. Initiating conditions

a) Submit the Routine AREOR (covering operation of the reactor units for the previous calendar year) of each year in accordance with Technical Specification 5.6.2.

6. Calculation methodology

a) Calculational methodologies used to satisfy the above surveillances should be documented in approved procedures, or should be included in the AREOR.

7. Corrective actions

a) If analyses are not performed as required, document actions taken to prevent reoccurrence in the AREOR pursuant to Technical Specification 5.6.2.

---

[1] A separate company may be contracted to complete the Routine AREOR.

INDEPENDENT SPENT FUEL STORAGE INSTALLATION MONITORING PROGRAM

1. Introduction

   a) The Technical Specifications for the Independent Spent Fuel Storage Installation[1] (ISFSI), licensed under 10 CFR 72, require that monitoring for the ISFSI be added to the existing environmental monitoring program for CCNPP.

   b) CCNPP has committed to additional monitoring for the ISFSI.[2]

   c) Radiological environmental controls have been established to implement the requirements and commitments described above.

   d) These radiological environmental controls are described below.

2. Controls on the ISFSI Monitoring Program

   a) Environmental monitoring sites, as described in Attachment 20, shall be established to monitor the air, vegetation, and soil as well as direct radiation in the ISFSI environs.[3]

   b) Analysis parameters, analysis frequencies, detection limits, and **ACTION** levels shall conform to the applicable requirements of Controls 3.12.1. (See attachment 14, 15, 16, and 17)

   c) Map(s) shall be maintained and shall show the locations of the environmental monitoring sites with respect to plant facilities. (See attachment 21 and 22).

3. Surveillance Requirements

   a) Surveillances for direct radiation

      (1) Direct radiation dosimetry shall be collected from locations SFDR1-SFDR16, DR7, and DR30 listed in Attachment 20.

      (2) In the event any dosimetry at an existing monitoring location SFDR1-SFDR16, DR7, or DR30 becomes unavailable, place new dosimetry at the monitoring station.

      (3) Analyze the dosimeters at the frequencies and for the parameters identified on Attachment 14.

---

1 The Technical Specifications For Calvert Cliffs Independent Spent Fuel Storage Installation is Appendix "A" to Materials License SNM-2505.

2 See the letter titled "Response to NRC's Comments to Environmental Issues Regarding BGE's License Application for Calvert Cliffs Independent Spent Fuel Storage Installation (ISFSI)" from Mr. R. E. Denton (BGE) to Director, Office of Nuclear Material Safety and Safeguards (NRC), dated November 1, 1990.

3 Environmental monitoring sites and monitoring parameters specifically excluded from the ISFSIMP include airborne radioiodines, radioiodines in food products, surface water, and fish and invertebrates. Additionally, soil samples shall be collected in lieu of shoreline sediment. The sampling frequency for vegetation and soil shall be quarterly.

b) Surveillances for airborne particulate activity

(1) Air particulate samples shall be collected from locations A1 and SFA1-SFA4 listed on Attachment 20.

(2) In the event any particulate filter becomes unavailable from an existing monitoring location A1 or SFA1-SFA4 described on Attachment 20, place a new particulate filter in the air sampler at the monitoring station.

(3) Analyze the samples at the frequencies and for the parameters identified under "Particulate Filters" on Attachment 15.

c) Surveillances for deposition on vegetation

(1) The vegetation samples SFb1-SFb5 shall be collected from the locations listed on Attachment 20.

(2) In the event any of the sampling sites SFb1-SFb5 described on Attachment 20 become unavailable, establish new sampling sites as described below:

(a) In lieu of sample SFb1, collect vegetation grown in the NW sector of the ISFSI.

(b) In lieu of sample SFb2, collect vegetation grown in the general vicinity of the CCNPP Visitor's Center.

(c) In lieu of sample SFb3, collect vegetation grown in the North North West sector of the ISFSI.

(d) In lieu of sample SFb4, collect vegetation grown in the South-Southeast sector of the ISFSI.

(e) In lieu of sample SFb5, collect vegetation grown in the East-Southeast sector of the ISFSI.

(3) Analyze the samples quarterly for the non-iodine parameters identified under "Food Products" on Attachment 17.

d) Surveillances for soil activity

(1) The soil samples SFS1-SFS5 shall be collected from the locations listed on Attachment 20.

(2) In the event any of the sampling sites SFS1-SFS5 described on Attachment 20 become unavailable, establish new sampling sites as described below:

(a) In lieu of sample SFS1, collect soil in the NW sector of the ISFSI.

(b) In lieu of sample SFS2, collect soil in the general vicinity of the CCNPP Visitor's Center.

(c) In lieu of sample SFS3, collect soil in the North North West sector of the ISFSI.

(d) In lieu of sample SFS4, collect soil in the South-Southeast sector of the ISFSI.

(e) In lieu of sample SFS5, collect soil in the East-Southeast sector of the ISFSI.

(3) Analyze the samples quarterly for the parameters identified under "Shoreline Sediment Sample" on Attachment 16.

4. Responsible Company Organizations

a) The CHEMISTRY SECTION, CCNPPI, is responsible for ensuring the performance of the surveillances listed above.

5. Initiating conditions

a) Collect samples in accordance with the frequencies specified on Attachments 14, 15, 16, and 17. Soil and vegetation samples shall be collected quarterly.

b) Analyze samples in accordance with the frequencies specified on Attachments 14, 15, 16, and 17. Soil and vegetation samples shall be analyzed quarterly.

c) Calculate the potential annual doses in accordance with the methodology outlined elsewhere in this section if any of the following conditions are true:

(1) any of the above surveillance results reveal levels of environmental activity greater than the **ACTION** Levels specified on Attachments 14, 15, 16, and 17, as appropriate. (per Control Table 3.12-2), or

(2) any radionuclides other than those listed on Attachments 14, 15, 16, and 17 are detected, and the radionuclides are the result of plant effluents or radionuclide deposition from the ISFSI, and the potential annual doses due to the radionuclides are greater than the limits listed in Control 3.12.1.b.

d) The Chemistry Section, CCNPPI, is responsible for notifying the General Supervisor--Chemistry, CCNPP, if any of the following conditions are true:

(1) any of the above surveillance results reveal levels of environmental activity greater than the **ACTION** Levels specified on Attachments 14, 15, 16, and 17, as appropriate (per Control Table 3.12-2), or

(2) any radionuclides other than those in Attachments 14, 15, 16, and 17 are detected, and the radionuclides are the result of plant effluents or radionuclide deposition from the ISFSI, and the potential annual doses due to the radionuclides are greater than the limits listed in Control 3.12.1.b.

6. Calculation methodology

a) If any (of the above) surveillance results reveal levels of environmental activity greater than the **ACTION** Levels specified on Attachments 14, 15, 16, or 17 (per Control Table 3.12-2), calculate potential annual doses for the pathway of interest, in accordance with the methodologies contained in Regulatory Guide 1.109.

b) If methodologies other than those listed in Regulatory Guide 1.109 are used to calculate potential annual doses, such methodologies shall be documented in accordance with Control 3.12.1.b.

7. Corrective actions

a) If a sample is unobtainable due to sampling equipment malfunction, then attempt to restore equipment to operable status before the end of the next sampling period, and document in the AREOR.

b) If the ISFSIMP is not being conducted in accordance with the "Surveillance Requirements" listed elsewhere in this section, document deviations in the AREOR.

c) When the analysis result for any parameter exceeds the **ACTION** Level listed on Attachments 15, 16, or 17, as appropriate, submit a Special Report to the NRC (per Control 3.12.1.b).

d) When radionuclides other than those listed on Attachments 15, 16, and 17 are detected, and when those radionuclides are the result of plant effluents or radionuclide deposition from the ISFSI, submit a Special Report if required by and in accordance with Control 3.12.1.b.

RADIOACTIVE EFFLUENT RELEASE REPORT

INTRODUCTION

1. Technical Specification 5.6.3 requires submittal of a written report to the NRC every 12 months.

2. The report is described below.

RESPONSIBILITIES

1. The General Supervisor Chemistry is responsible for the timely and accurate completion of the report.

REPORT CONTENTS

1. The Radioactive Effluent Release Report (RERR) covering the operation of the unit shall be submitted every 12 months in accordance with 10 CFR 50.36a.

2. The RERR shall include a summary of the quantities of radioactive liquid and gaseous effluents and solid waste released from the units. The material provided shall be consistent with the objectives outlined in the ODCM and in conformance to 10CFR50.36a and 10CFR50, Appendix I, section IV.B.1. Principle Gamma Emitters from Batch Waste Releases and Turbine Building Sump shall be analyzed and included in this report pursuant to Table Notation c of Control Table 4.11-1, "Radioactive Liquid Waste Sampling and Analysis Program." In addition, Principal Gamma Emitters from the Waste Gas Storage Tank, Containment Purge and Vent, and the Main Vent shall be analyzed and included in this report pursuant to Table Notation b of Controls Table 4.11-2, "Radioactive Gaseous Waste Sampling and Analysis Program." Additional information which may be required in the report is contained in Controls 3.3.3.9.b, 3.3.3.10.b and Technical Specification 5.6.3.

3. The RERR shall include an annual summary of hourly meteorological data collected over the previous year. This annual summary may be either in the form of an hour-by-hour listing on magnetic tape of wind speed, wind direction, atmospheric stability, and precipitation (if measured), or in the form of joint frequency distributions of wind speed, wind direction, and atmospheric stability.[1] This same report shall include an assessment of the radiation doses due to the radioactive liquid and gaseous effluents released from the unit or station during the previous calendar year. The assessment of radiation doses shall be performed in accordance with the methodology and parameters in the **OFFSITE DOSE CALCULATION MANUAL** (ODCM).

4. The RERR shall also include an assessment of radiation doses to the likely most exposed **MEMBER OF THE PUBLIC** from reactor releases and other nearby uranium fuel cycle sources, including doses from primary effluent pathways and direct radiation, for the previous calendar year to show conformance with 40 CFR Part 190, Environmental Radiation Protection Standards for Nuclear Power Operation. Acceptable methods for calculating the dose contribution from liquid and gaseous effluents are given in Regulatory Guide 1.109, Rev. 1, October 1977, and NUREG-0133, "Preparation of Radiological Effluent Technical Specifications for Nuclear Power Plants."

---

[1] In lieu of submission with the Radioactive Effluent Release Report, this summary of required meteorological data may be retained on site in a file that shall be provided to the NRC upon request.

5. The RERR shall include the following information for each class of solid waste (as defined by 10 CFR Part 61) shipped offsite during the report period:

   a. Container volume,

   b. Total curie quantity (specify whether determined by measurement or estimate),

   c. Principal radionuclides (specify whether determined by measurement or estimate),

   d. Source of waste and processing employed (e.g., dewatered spent resin, compacted dry waste, evaporator bottoms),

   e. Solidification agent or absorbent (e.g., cement).

6. The RERR shall include a list and description of unplanned releases from the site to **UNRESTRICTED AREAS** of radioactive materials in gaseous and liquid effluents made during the reporting period.

7. The RERR shall include any changes made during the reporting period to the **OFFSITE DOSE CALCULATION MANUAL** (ODCM) and a listing of new locations for dose calculations identified by the annual land use census pursuant to Control 3.12.2.

8. The RERR shall include any changes made during the reporting period to the **PROCESS CONTROL PROGRAM** (PCP)[1]. The report shall contain:

   a. A description of the equipment, components and processes involved.

   b. Documentation of the fact that the change, including the safety analysis, was reviewed and found acceptable by the POSRC.

REPORT SUBMITTAL

1. Prior to submittal a Independent Technical Review will be performed.

2. The RERR will be submitted every 12 months in accordance with 10 CFR 50.36a and 50.4.

---

[1] Licensee initiated changes to the PCP shall become effective upon review by the POSRC and approval of the Plant General Manager.

ADMINISTRATION OF THE ODCM

INTRODUCTION

1. Procedures covering the ODCM and the implementation of the ODCM shall be implemented.
2. Administrative controls have been established to implement controls on the ODCM.
3. These administrative controls are described below.

CONTROLS ON THE ODCM

1. The format, organization, content, and administration of the ODCM are controlled by CH-1-103.
2. Methodologies identified in the ODCM are implemented by various CCNNPI organizations in accordance with approved procedures. (See the "RESPONSIBILITIES" section of CH-1-103 for a list of those Sections of CCNNPI responsible for approving and maintaining procedures which implement the requirements of the ODCM.)
3. The main vent stack flow rates shall be verified in accordance with the surveillances described in the following section, "Surveillance Requirements".
4. Licensee initiated changes to the ODCM:
   a) Shall be documented and records of reviews performed shall be retained. This documentation shall contain
      (1) Sufficient information to support the change(s) together with the appropriate analyses or evaluations justifying the change(s);
      (2) A determination that the change(s) maintain the levels of radioactive effluent control required by 10 CFR 20 (1990), 10 CFR 20.1302, 40 CFR Part 190, 10 CFR 50.36a, and 10 CFR Part 50, Appendix I, and not adversely impact the accuracy or reliability of effluent dose, or setpoint calculations;
   b) Shall become effective upon review by the onsite review function and approval of the plant manager; and
   c) Shall be submitted to the NRC in the form of a complete, legible copy of the entire ODCM as part of or concurrent with the Radioactive Effluent Release Report for the period of the report in which any change in the ODCM was made. Each change shall be identified by markings in the margin of the affected pages, clearly indicating the area of the page that was changed, and shall indicate the date (i.e., month and year) the change was implemented.

SURVEILLANCE REQUIREMENTS

1. Complete audits and PERIODIC REVIEWS of the ODCM in accordance with CH-1-103.

2. Determine main vent stack flow rates for both units as described below.

   a) The main vent stack flow rate shall be determined, in accordance with approved procedures, at least once per 6 months (± 25%).

   b) The Electrical and Control Section shall be responsible for performing this test.

   c) The results of the main vent flow rate test shall be evaluated to ensure the main vent flow rates used in the ODCM are an accurate reflection of the true main vent flow rates.

   d) IF the main vent stack flow rate for either unit, as determined in accordance with approved Test and Equipment procedure(s), changes ± 10% from the values referenced in Attachment 7 of the ODCM, a technical evaluation shall be initiated to determine if the ODCM should be revised.

RESPONSIBLE COMPANY ORGANIZATIONS

1. CH-1-103 identifies the responsibilities of various personnel and company organizations which administer and implement the ODCM. This section of the ODCM identifies company organizations which are assigned responsibility for implementing the surveillances described above.

2. The Electrical and Control Section is responsible for ensuring the main vent stack flow rate test procedure (e.g., STP-M-462-1, STP-M-462-2 or equivalent) is completed in accordance with the surveillances listed above.

3. The Electrical and Control Section is responsible for forwarding main vent stack flow rate test results to the General Supervisor - Chemistry.

4. The RETS Program Manager, CCNPPI CHEMISTRY SECTION, is responsible for evaluating main vent flow rate test results (e.g., STP-M-462-1, STP-M-462-2 or equivalent results) and for performing the technical evaluation described in the above surveillances.

INITIATING CONDITIONS

1. Main vent stack flow rates shall be determined at least once per 6 months (± 25%), or more often if required by Controls.

2. Complete PERIODIC REVIEWS of the ODCM as specified in CH-1-103.

CALCULATION METHODOLOGIES

1. Calculational methodologies used to satisfy the above surveillances should be documented in approved procedures.

2. Documents which serve as a basis for calculation methodologies used in the ODCM should be maintained in an accessible location.

   (1) Supporting documents may be incorporated into the ODCM (e.g., as Attachments).

   (2) Supporting documents may be maintained in a "procedure history file".

   (3) Supporting documents may be identified in the "references" section of the ODCM.

CORRECTIVE ACTIONS

1. IF main vent stack flow rates, as determined in accordance with appropriate Test Equipment procedure(s), change ± 10% from the values referenced in Attachment 7 of the ODCM, a technical evaluation shall be initiated to determine if the ODCM should be revised.

BASES

1. [B527], NRC Inspection Report INSR 91-30/30

Attachment 1
Final Grading And Drainage Plan

A reference diagram which depicts the grading for and the drainage from the Calvert Cliffs Nuclear Power Plant can be found in the following reference:

Final Grading And Drainage Plan Calvert Cliffs Nuclear Power Plant Units 1 and 2, BGE Document ID Number: 61517SH0001 BGE Document ID Number: 61514SH0002

The above referenced grading and drainage plan is intended for reference only. This drawing may not reflect the changes and modifications since March 1975.

Attachment 2
Sources of Liquid Radioactive Waste

Waste Stream	Radiation Monitor	Type of Release	Max. Discharge Flow Rate		Maximum Volume		Notes
			gal/min	liters/min	gal	liters	
Rx. Coolant Wst. Mon. Tk.	0-RE-2201	Batch	120	454	90000[13]	3.407E5[13]	
Rx. Coolant Wst. Rec. Tk.	0-RE-2201	Batch	120	454	90000[13]	3.407E5[13]	
Misc. Wst. Mon. Tk.	0-RE-2201	Batch	120	454	4000[13]	15140[13]	
Misc. Wst. Rec. Tk.	0-RE-2201	Batch	120	454	4000[13]	15140[13]	
Aux. Boiler Steam Drum	All releases are via Auxiliary Blowdown Tank						
Aux. Blowdown Tk.	Unmonitored	Continuous	200[12]	757	N/A	N/A	
Waste Neut. Tk. 11	Unmonitored	Batch	1000[1]	3790[1]	45988	1.74E5	
Waste Neut. Tk. 12	Unmonitored	Batch	1000[1]	3790[1]	47749	1.80E5	
Stm. Gen. Blowdown Tk.	1/2-RE-4014[14]	Continuous/ Batch[11]	225[2]	852[2]	2350[3]	8895[3]	
Component Cooling Water[4]	Unmonitored	Continuous	variable[5]	variable[5]	44090[6]	1.669E5	
Condenser Hotwells	Unmonitored	Batch[10]	4500[7]	17000[7]	1.05E5	3.97E5	
Salt Water System	Unmonitored	Continuous	15500	58670	N/A	N/A	
Condensate Storage Tank	Unmonitored	Batch	Variable[8]	Variable[8]	3.5E5[9]	1.3E6[9]	
Demin. Water Storage Tank	Unmonitored	Batch	Variable[8]	Variable[8]	3.5E5[9]	1.3E6[9]	
Precoat Sump	Unmonitored	Continuous	50	94.6	10305[3]	39004[3]	

Attachment 2
Sources of Liquid Radioactive Waste

Waste Stream	Radiation Monitor	Type of Release	Max. Discharge Flow Rate		Maximum Volume		Notes
			Gal/min	liters/min	gal	liters	
Aux. Building Roof Drains[19]	Unmonitored	Continuous	Variable	Variable	N/A	N/A	
Sewage Treatment Plant	Unmonitored	Continuous	185	700	N/A	N/A	
Turbine Bldg. Sump No. 11	Unmonitored	Continuous	470	889	1950	7381	
Turbine Bldg. Sump No. 12	Unmonitored	Continuous	470	889	2415	9141	
Turbine Bldg. Sump No. 21	Unmonitored	Continuous	470	889	2490	9425	
Turbine Bldg. Sump No. 22	Unmonitored	Continuous	470	889	2182	8259	
Diesel Oil Interceptor Sump	Unmonitored	Continuous	100	378.5	5790	21920	
Yard Oil Interceptor	Unmonitored	Continuous	variable[15]	variable[15]	N/A	N/A	
Refueling Water Tank	Unmonitored	Batch/Cont.[17]	variable[15]	variable[15]	4.2E5	1.6E6	
Condensate Storage Tank	Unmonitored	Batch/Cont.[17]	variable[15]	variable[15]	3.5E5[16]	1.3E6[16]	
Service Water System	1/2-RE-1595	Continuous	variable[15]	variable[15]	31418	1.189E5	
Plant Heating System[18]	Unmonitored	Continuous	variable[15]	variable[15]	N/A	N/A	

Attachment 2
Sources of Liquid Radioactive Waste

1. This flow rate is only an approximation. The motive force is gravity
2. This is the maximum flow rate. The actual flow rate will be considerably less.
3. This is the maximum volume of the tank for a BATCH RELEASE. If the release is a **CONTINUOUS RELEASE**, the volume discharged would be calculated from the discharge flow rate and duration of the release.
4. There is no direct path by which radioactive liquid from the CCW System could enter outfall 001. Liquid from the CCW System may leak into either the Salt Water System (which drains to outfall 001) or the Liquid Waste Processing System (via Aux. Bldg. Drains).
5. Radioactive liquid is not normally released from the CCW system. Flow rate to outfall 001 may occur via Salt Water System. For this pathway, the flow rate will vary (e.g., depending on size of leak). See Safety Analysis No. 2, FCR 82-1053, Supplement 1.
6. System volume is 5894 cubic feet. Conversion constant is 0.13368 cubic feet per gallon.
7. The flow rate shown here is the flow rate for one condensate pump. Verify the number on condensate pumps in service, and modify this flow rate accordingly.
8. Flow rate should be calculated on a case-by-case basis.
9. Volume obtained from "Plant Data Book", BGE CCNPP Units 1 and 2, Bechtel Power Corporation, Volume 1, Job 6750.
10. May be a **CONTINUOUS RELEASE** if contaminated sealing steam is operated during the release.
11. Although steam generator releases may be either CONTINUOUS RELEASES or BATCH RELEASES. Verify type of release to be conducted prior to discharge.
12. This is the maximum rated discharge for two pumps in operation.
13. The volume specified is the design basis volume from Table 11-1 of the UFSAR.
14. The steam generator blowdown effluent radiation monitor, 1/2-RE-4095, may be equivalent to the 1/2-RE-4014 (see part 5, Liquid Effluent Radiation Monitor Alarm and Fixed Setpoints, para. 2)
15. Maximum discharge flow rate shall be determined on a case-by-case basis.
16. Volume obtained from "Plant Data Book", BGE CCNPP Units 1 and 2, Bechtel Power Corporation, Volume 1, Job 6750.
17. Releases via this pathway would be considered a **BATCH RELEASE** if a catastrophic tank failure occurred. In the event of a small leak, the release may be considered a **CONTINUOUS RELEASE**. The release mode should be determined on a case-by-case basis.
18. The plant heating system is a closed system and is not normally released to the environment. In the event of a leak, the effluent may be released to the environment via the turbine building sumps. In some cases, depending on the location of the leak, the effluent would be collected in the auxiliary building sump and subsequently released through the liquid radioactive waste processing system. The effluent pathway should be determined on a case-by-case basis.
19. Plant drawings indicate that these drains discharge to outfalls 003 and 004.

Attachment 3

(This page intentionally left blank.)

Attachment 4
Block Diagram of Liquid Radioactive Waste Systems

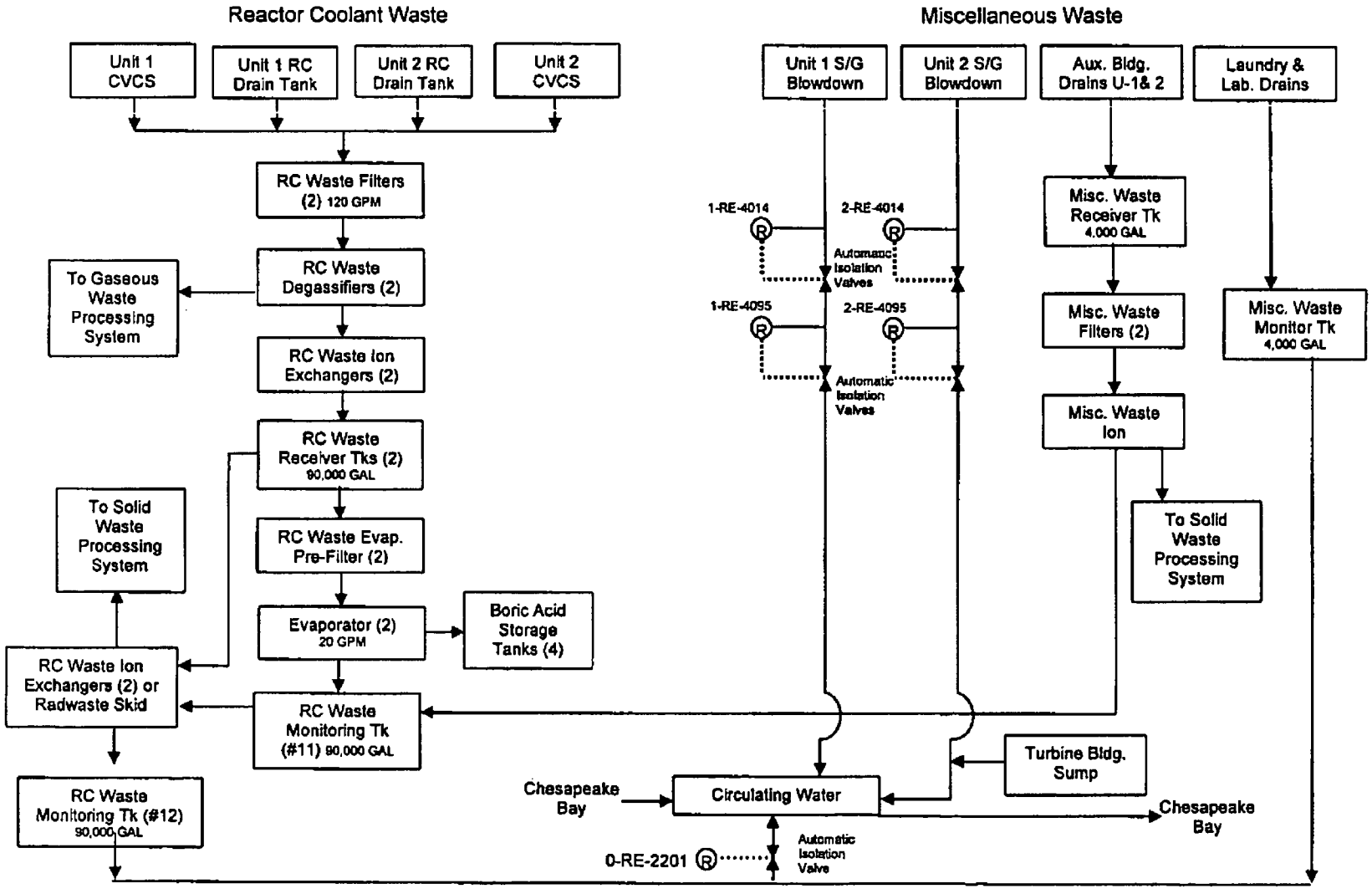

Attachment 5
Radionuclides in Typical Radwaste Discharges

The term f_i -- a fraction which represents the relative activity contribution of nuclide i to the average total effluent activity -- is used in several equations in the ODCM (e.g., equations 2G, 5G, 3L, and 4L). This attachment provides guidance for calculating the values of f_i.

1. Select the calendar quarters which contain at least one "typical" liquid (or gas) release (see definition of TYPICAL RADWASTE RELEASE).

2. For each of the calendar quarters selected above, obtain a listing of the nuclides, nuclide activities, and release (end) dates.
   a. This data may be obtained from the Radioactive Effluent Release Report(s) for the time periods of interest, or
   b. This data may be obtained from a computer-based effluent management system (if available).
   c. The values of nuclide activities and release end times may be close approximations of the true values.

3. Sum the quarterly activities (curies) for each individual radionuclide.

$$A_{iT} = \Sigma A_{iQ} \qquad \text{Eq. 1R}$$

4. Sum the quarterly activities for all radionuclides, i.

$$A_T = \Sigma A_{iT} \qquad \text{Eq. 2R}$$

5. Calculate the fraction of the total activity attributable to each radionuclide (i.e., the relative activity of nuclide i).

$$f_i = A_{iT} / A_T \qquad \text{Eq. 3R}$$

Attachment 6
Liquid Effluent Dose Factors (mrem/hr per uCi/ml)

Nuclide	Bone	Liver	Tbody	Thyroid	Kidney	Lung	Gltract
H-3	0.000E+00	2.820E-01	2.820E-01	2.820E-01	2.820E-01	2.820E-01	2.820E-01
BE-7	2.700E+01	1.100E+01	6.500E+01	1.300E+00	1.600E+01	3.100E+00	2.700E+02
C-14	1.450E+04	2.900E+03	2.900E+03	2.900E+03	2.900E+03	2.900E+03	2.900E+03
NA-24	4.570E-01	4.570E-01	4.570E-01	4.570E-01	4.570E-01	4.570E-01	4.570E-01
P-32	4.690E+06	2.910E+05	1.810E+05	0.000E+00	0.000E+00	0.000E+00	5.270E+05
CR-51	0.000E+00	0.000E+00	5.580E+00	3.340E+00	1.230E+00	7.400E+00	1.400E+03
MN-54	0.000E+00	7.060E+03	1.350E+03	0.000E+00	2.100E+03	0.000E+00	2.160E+04
MN-56	0.000E+00	1.780E+02	3.150E+01	0.000E+00	2.260E+02	0.000E+00	5.670E+03
FE-55	5.110E+04	3.530E+04	8.230E+03	0.000E+00	0.000E+00	1.970E+04	2.030E+04
FE-59	8.060E+04	1.900E+05	7.270E+04	0.000E+00	0.000E+00	5.300E+04	6.320E+05
CO-57	0.000E+00	1.420E+02	2.360E+02	0.000E+00	0.000E+00	0.000E+00	3.590E+03
CO-58	0.000E+00	6.030E+02	1.350E+03	0.000E+00	0.000E+00	0.000E+00	1.220E+04
CO-60	0.000E+00	1.730E+03	3.820E+03	0.000E+00	0.000E+00	0.000E+00	3.250E+04
NI-63	4.960E+04	3.440E+03	1.670E+03	0.000E+00	0.000E+00	0.000E+00	7.180E+02
NI-65	2.020E+02	2.620E+01	1.200E+01	0.000E+00	0.000E+00	0.000E+00	6.650E+02
CU-64	0.000E+00	2.140E+02	1.010E+02	0.000E+00	5.400E+02	0.000E+00	1.830E+04
ZN-65	1.610E+05	5.130E+05	2.320E+05	0.000E+00	3.430E+05	0.000E+00	3.230E+05
ZN-69	3.430E+02	6.560E+02	4.560E+01	0.000E+00	4.260E+02	0.000E+00	9.850E+01
BR-82	0.000E+00	0.000E+00	4.070E+00	0.000E+00	0.000E+00	0.000E+00	4.670E+00
BR-83	0.000E+00	0.000E+00	7.250E-02	0.000E+00	0.000E+00	0.000E+00	1.040E-01
BR-84	0.000E+00	0.000E+00	9.390E-02	0.000E+00	0.000E+00	0.000E+00	7.370E-07
BR-85	0.000E+00	0.000E+00	3.860E-03	0.000E+00	0.000E+00	0.000E+00	0.000E+00
RB-86	0.000E+00	6.240E+02	2.910E+02	0.000E+00	0.000E+00	0.000E+00	1.230E+02
RB-88	0.000E+00	1.790E+00	9.490E-01	0.000E+00	0.000E+00	0.000E+00	0.000E+00
RB-89	0.000E+00	1.190E+00	8.340E-01	0.000E+00	0.000E+00	0.000E+00	0.000E+00
SR-89	4.990E+03	0.000E+00	1.430E+02	0.000E+00	0.000E+00	0.000E+00	8.000E+02
SR-90	1.230E+05	0.000E+00	3.010E+04	0.000E+00	0.000E+00	0.000E+00	3.550E+03
SR-91	9.180E+01	0.000E+00	3.710E+00	0.000E+00	0.000E+00	0.000E+00	4.370E+02
SR-92	3.480E+01	0.000E+00	1.510E+00	0.000E+00	0.000E+00	0.000E+00	6.900E+02
Y-90	6.060E+00	0.000E+00	1.630E-01	0.000E+00	0.000E+00	0.000E+00	6.420E+04
Y-91M	5.730E-02	0.000E+00	2.220E-03	0.000E+00	0.000E+00	0.000E+00	1.680E-01
Y-91	8.880E+01	0.000E+00	2.370E+00	0.000E+00	0.000E+00	0.000E+00	4.890E+04
Y-92	5.320E-01	0.000E+00	1.560E-02	0.000E+00	0.000E+00	0.000E+00	9.320E+03
Y-93	1.690E+00	0.000E+00	4.660E-02	0.000E+00	0.000E+00	0.000E+00	5.350E+04
ZR-95	1.590E+01	5.110E+00	3.460E+00	0.000E+00	8.020E+00	0.000E+00	1.620E+04
ZR-97	8.810E-01	1.780E-01	8.130E-02	0.000E+00	2.680E-01	0.000E+00	5.510E+04
NB-95	4.470E+02	2.490E+02	1.340E+02	0.000E+00	2.460E+02	0.000E+00	1.510E+06
NB-97	3.750E+00	9.490E-01	3.460E-01	0.000E+00	1.110E+00	0.000E+00	3.500E+03

Attachment 6
Liquid Effluent Dose Factors (mrem/hr per uCi/ml)

Nuclide	Bone	Liver	Tbody	Thyroid	Kidney	Lung	Gltract
MO-99	0.000E+00	1.280E+02	2.430E+01	0.000E+00	2.890E+02	0.000E+00	2.960E+02
TC-99M	1.300E-02	3.660E-02	4.660E-01	0.000E+00	5.560E-01	1.790E-02	2.170E+01
TC-101	1.330E-02	1.920E-02	1.880E-01	0.000E+00	3.460E-01	9.810E-03	0.000E+00
RU-103	1.070E+02	0.000E+00	4.600E+01	0.000E+00	4.070E+02	0.000E+00	1.250E+04
RU-105	8.890E+00	0.000E+00	3.510E+00	0.000E+00	1.150E+02	0.000E+00	5.440E+03
RU-106	1.590E+03	0.000E+00	2.010E+02	0.000E+00	3.060E+03	0.000E+00	1.030E+05
RH-103M	0.000E+00	0.000E+00	0.000E+00	0.000E+00	0.000E+00	0.000E+00	0.000E+00
RH-106	0.000E+00	0.000E+00	0.000E+00	0.000E+00	0.000E+00	0.000E+00	0.000E+00
CD-109	2.100E+05	4.000E+06	1.600E+06	1.500E+05	2.200E+07	1.800E+05	2.500E+06
AG-110M	1.560E+03	1.450E+03	8.600E+02	0.000E+00	2.850E+03	0.000E+00	5.910E+05
SN-113	6.700E+03	1.200E+03	2.100E+04	6.200E+02	1.600E+03	7.300E+02	2.200E+05
SB-122	5.300E+01	5.520E+01	6.690E+02	8.780E+00	2.610E+01	1.140E+01	6.580E+03
SB-124	2.770E+02	5.230E+00	1.100E+02	6.710E-01	0.000E+00	2.150E+02	7.860E+03
SB-125	1.770E+02	1.980E+00	4.210E+01	1.800E-01	0.000E+00	1.360E+02	1.950E+03
TE-125M	2.170E+02	7.860E+01	2.910E+01	6.520E+01	8.820E+02	0.000E+00	8.660E+02
TE-127M	5.480E+02	1.960E+02	6.680E+01	1.400E+02	2.230E+03	0.000E+00	1.840E+03
TE-127	8.900E+00	3.200E+00	1.930E+00	6.600E+00	3.630E+01	0.000E+00	7.030E+02
TE-129M	9.310E+02	3.470E+02	1.470E+02	3.200E+02	3.890E+03	0.000E+00	4.690E+03
TE-129	2.540E+00	9.550E-01	6.190E-01	1.950E+00	1.070E+01	0.000E+00	1.920E+00
TE-131M	1.400E+02	6.850E+01	5.710E+01	1.080E+02	6.940E+02	0.000E+00	6.800E+03
TE-131	1.590E+00	6.660E-01	5.030E-01	1.310E+00	6.990E+00	0.000E+00	2.260E-01
TE-132	2.040E+02	1.320E+02	1.240E+02	1.460E+02	1.270E+03	0.000E+00	6.240E+03
I-130	3.960E+01	1.170E+02	4.610E+01	9.910E+03	1.820E+02	0.000E+00	1.010E+02
I-131	2.180E+02	3.120E+02	1.790E+02	1.020E+05	5.350E+02	0.000E+00	8.230E+01
I-132	1.060E+01	2.850E+01	9.960E+00	9.960E+02	4.540E+01	0.000E+00	5.350E+00
I-133	7.450E+01	1.300E+02	3.950E+01	1.900E+04	2.260E+02	0.000E+00	1.160E+02
I-134	5.560E+00	1.510E+01	5.400E+00	2.620E+02	2.400E+01	0.000E+00	1.320E-02
I-135	2.320E+01	6.080E+01	2.240E+01	4.010E+03	9.750E+01	0.000E+00	6.870E+01
CS-134	6.840E+03	1.630E+04	1.330E+04	0.000E+00	5.270E+03	1.750E+03	2.850E+02
CS-136	7.160E+02	2.830E+03	2.040E+03	0.000E+00	1.570E+03	2.160E+02	3.210E+02
CS-137	8.770E+03	1.200E+04	7.850E+03	0.000E+00	4.070E+03	1.350E+03	2.320E+02
CS-138	6.070E+00	1.200E+01	5.940E+00	0.000E+00	8.810E+00	8.700E-01	5.120E-05
BA-139	7.850E+00	5.590E-03	2.300E-01	0.000E+00	5.230E-03	3.170E-03	1.390E+01
BA-140	1.640E+03	2.060E+00	1.080E+02	0.000E+00	7.020E-01	1.180E+00	3.380E+03
BA-141	3.810E+00	2.880E-03	1.290E-01	0.000E+00	2.680E-03	1.630E-03	1.800E-09

Attachment 6
Liquid Effluent Dose Factors (mrem/hr per uCi/ml)

Nuclide	Bone	Liver	Tbody	Thyroid	Kidney	Lung	Gitract
BA-142	1.720E+00	1.770E-03	1.080E-01	0.000E+00	1.500E-03	1.000E-03	0.000E+00
LA-140	1.570E+00	7.940E-01	2.100E-01	0.000E+00	0.000E+00	0.000E+00	5.830E+04
CE-139	1.000E+02	4.800E+01	3.700E+02	6.200E-01	3.400E+01	4.800E+00	3.200E+03
LA-142	8.060E-02	3.670E-02	9.130E-03	0.000E+00	0.000E+00	0.000E+00	2.680E+02
CE-141	3.430E+00	2.320E+00	2.630E-01	0.000E+00	1.080E+00	0.000E+00	8.860E+03
CE-143	6.040E-01	4.460E+02	4.940E-02	0.000E+00	1.970E-01	0.000E+00	1.670E+04
CE-144	1.790E+02	7.470E+01	9.590E+00	0.000E+00	4.430E+01	0.000E+00	6.040E+04
PR-143	5.790E+00	2.320E+00	2.870E-01	0.000E+00	1.340E+00	0.000E+00	2.540E+04
PR-144	1.900E-02	7.870E-03	9.640E-04	0.000E+00	4.440E-03	0.000E+00	2.730E-09
ND-147	3.960E+00	4.580E+00	2.740E-01	0.000E+00	2.680E+00	0.000E+00	2.200E+04
EU-154	3.870E+02	4.760E+01	3.390E+01	0.000E+00	2.280E+02	0.000E+00	3.450E+04
EU-155	5.420E+01	7.68E+00	4.960E+00	0.000E+00	3.550E+01	0.000E+00	6.050E+03
W-187	9.160E+00	7.660E+00	2.680E+00	0.000E+00	0.000E+00	0.000E+00	2.510E+03
NP-239	3.530E-02	3.470E-03	1.910E-03	0.000E+00	1.080E-02	0.000E+00	7.110E+02
HG-203	1.400E+05	0.000E+00	1.600E+05	0.000E+00	1.600E+06	1.000E+05	3.200E+05

Attachment 7
General Information Related to Gaseous Releases via the Main Vents

Waste Stream	Radiation Monitor	Type of release	Nominal Discharge Flow Rate		Maximum Discharge Flow Rate		Note
			m^3 / sec	SCFM	m^3/sec	SCFM	
Waste Gas System (WGDT)	0-RE-2191[1]	Batch	N/A	N/A	2.36E-2	50	
Cntmt. Vent (via H2 Purge)	1/2-RE-5415[2]	Batch[3]	2.36E-2	50	2.93E-1	620	
Unit 1 Cntmt. Purge (100%)	1-RE-5415[4]	Continuous[5]	N/A	N/A	22.4[6]	47,387[6]	
Unit 2 Cntmt. Purge (100%)	2-RE-5415[7]	Continuous[5]	N/A	N/A	20.9[8]	44,320[8]	
Unit 1 Main Vent Release	1-RE-5415[4]	Continuous	56.3[9]	119339[9]	62.0[10]	131273[10]	
Unit 2 Main Vent Release	2-RE-5415[7]	Continuous	42.7[9]	90500[9]	47.0[10]	99550[10]	

1 Since the WGDT is released to the plant vent stack, 1/2-RE-5415 and 1/2-RE-5416 may also be used to monitor releases from a WGDT.
2 The WRGM, 1/2-RE-5416, may also monitor these releases.
3 A containment vent is considered a "batch" release (even though inleakage of radioactive gases into the containment atmosphere may occur during the time the vent is in progress).
4 The WRGM, 1-RE-5416, may also monitor these releases.
5 A purge is considered to be a CONTINUOUS RELEASE due to potential introduction of radioactive gases to the containment atmosphere during containment maintenance activities.
6 This is the purge flow rate as determined by approved test procedure (i.e., TE-006) in April 1998.
7 The WRGM, 2-RE-5416, may also monitor these releases.
8 This is the purge flow rate as determined by approved test procedure (i.e., TE-006) in March 2001.
9 This is the mean main vent stack flow rate as determined by approved test procedure (i.e., TE-001 from 8/1990-3/1996 for Unit 1 and TE-001 from 8/1990-3/2000 for Unit 2 or STP-M-462-1 for Unit 1 and STP-M-462-2 for Unit 2 beginning in May 2002).
10 This is the maximum vent stack flow rate which is equal to 110% of the Nominal Discharge Flow rate.

Attachment 8

General Information Related to Gaseous Releases via Pathways other than the Main Vents

Waste Streams	Radiation Monitor	Type of Release	Nominal Discharge Flow Rate	Notes
Aux. Boiler Deaerator	Unmonitored	See Footnote[1]		See Footnote[2]
Stm. Gen. Atm. Stm. Dumps	Unmonitored	See Footnote[1]		See Footnote[2]
Plant Nitrogen System	Unmonitored	See Footnote[1]		See Footnote[2]
Turbine Bldg. Vent. Exh[3]	Unmonitored	See Footnote[1]		See Footnote[2]
Emergency Air Lock	Unmonitored	See Footnote[1]		See Footnote[2]
Plant Compressed Air	Unmonitored	See Footnote[1]		See Footnote[2]
Main Steam Line Penetrations	Unmonitored	See Footnote[1]		See Footnote[2]
Steam Driven Auxiliary Feed Pumps	Unmonitored	See Footnote[1]		See Footnote[2]
Containment Equipment Hatch	Unmonitored	See Footnote[1]		See Footnote[2]

1 Since radioactive gaseous waste is not normally vented via this pathway, the determination of release type (i.e., continuous or batch) will be evaluated on a case-by-case basis.

2 Since radioactive gaseous waste is not normally vented via this pathway, the determination of discharge flow rate will be evaluated on a case-by-case basis.

3 Includes sources such as Gland Seal Exhaust.

Attachment 9
Block Diagram of Gaseous Radioactive Waste Systems

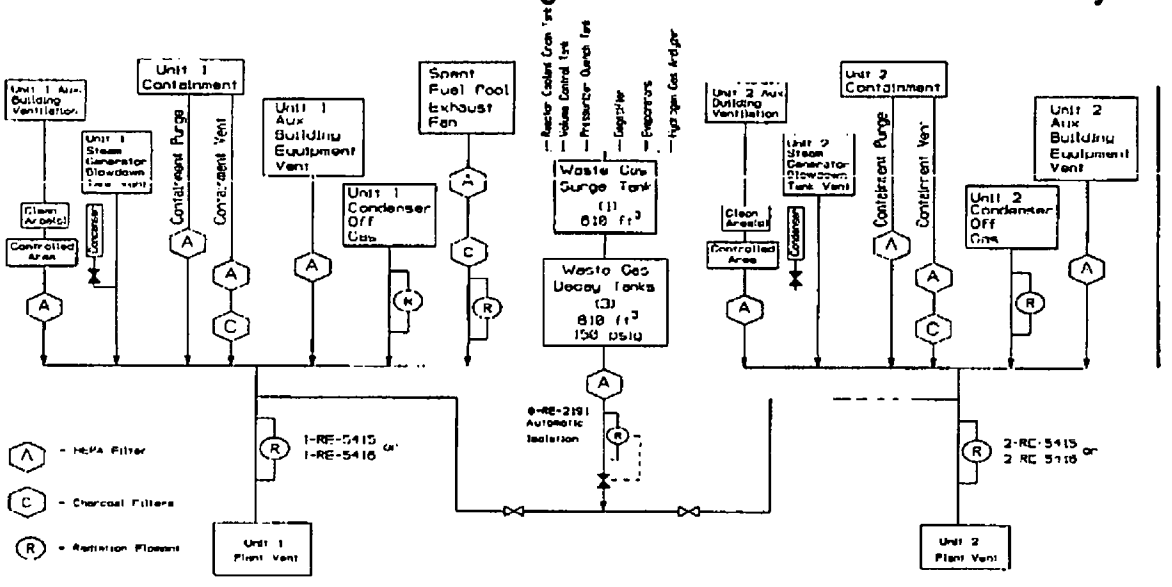

Attachment 10
Noble Gas Dose Factors

NUCLIDE	GAMMA BODY DOSE K_i (mrem/yr)/(µCi/m3)	BETA SKIN DOSE L_i (mrem/yr)/(µCi/m3)	GAMMA AIR DOSE M_i (mrad/yr)/(µCi/m3)	BETA AIR DOSE N_j (mrad/yr)/(µCi/m3)
Ar-41	8.84E+03	2.69E+03	9.30E+03	3.28E+03
Kr-85	1.61E+01	1.34E+03	1.72E+01	1.95E+03
Kr-85m	1.17E+03	1.46E+03	1.23E+03	1.97E+03
Kr-87	5.92E+03	9.73E+03	6.17E+03	1.03E+04
Kr-88	1.47E+04	2.37E+03	1.52E+04	2.93E+03
Xe-131m	9.15E+01	4.76E+02	1.56E+02	1.11E+03
Xe-133	2.94E+02	3.06E+02	3.53E+02	1.05E+03
Xe-133m	2.51E+02	9.94E+02	3.27E+02	1.48E+03
Xe-135	1.81E+03	1.86E+03	1.92E+03	2.46E+03
Xe-135m	3.12E+03	7.11E+02	3.36E+03	7.39E+02
Xe-138	8.83E+03	4.13E+03	9.21E+03	4.75E+03

Attachment 11
Empirical Derivation Of Site-Specific Dose Factors

The total body dose, the skin dose, and the air doses–resulting from gamma and beta emitting radionuclides in discharges of gaseous radwaste–are normally calculated using nuclide specific dose factors. However, these same doses may be estimated using empirically derived, site specific, dose factors as shown below.

TOTAL-BODY, GAMMA-DOSE FACTOR
A site-specific, total-body, gamma-dose factor has been derived from historical data in accordance with the following equation.

$$K_{avg} = \Sigma (K_i)(f_i) \qquad \text{Eq. 1F}$$

K_{avg} = the empirically derived, site-specific, total-body, gamma-dose factor due to all noble gases released during a specified time period

Values of K_{avg} have been calculated using gaseous radwaste discharge data collected over several years.

The results of the calculations appear in the Table on page 5 of this attachment.

K_i = the total body dose factor due to gamma emissions for each identified noble gas radionuclide, i (mrem/yr per microcurie/cubic meter)

The total-body dose factors for gamma rays from noble gas radionuclides were obtained from Regulatory Guide 1.109, Appendix B, Table B-1.

The total-body dose factors for various noble gas radionuclides are tabulated in Attachment 10.

f_i = a fraction which represents the relative activity contribution of noble gas radionuclide i to the total noble gas activity for TYPICAL GASEOUS EFFLUENTS (unitless)

This value has been calculated for all gaseous radwaste discharges for the years 1986, 1987, and 1988 in accordance with equation 3R on Attachment 5.

Attachment 11
Empirical Derivation of Site-Specific Dose Factors

SKIN, BETA-DOSE FACTOR
A site-specific, skin, beta-dose factor has been derived from historical data in accordance with the following equation.

$$L_{avg} = \Sigma (L_i)(f_i) \qquad \text{Eq. 2F}$$

L_{avg} = the empirically derived, site-specific, skin, beta-dose factor due to all noble gases released during a specified time period

Values of L_{avg} have been calculated using gaseous radwaste discharge data collected over several years.

The results of the calculations appear in the Table on page 5 of this attachment.

L_i = the skin dose factor due to beta emissions for each identified noble gas radionuclide, i (mrem/yr per microcurie/cubic meter)

The beta skin dose factors have been obtained from Regulatory Guide 1.109, Appendix B, Table B-1.

The beta skin dose factors for various noble gas radionuclides are tabulated in Attachment 10.

f_i = a fraction which represents the relative activity contribution of noble gas radionuclide i to the total noble gas activity for TYPICAL GASEOUS EFFLUENTS (unitless)

This value has been calculated for all gaseous radwaste discharges for the years 1986, 1987, and 1988 in accordance with equation 3R on Attachment 5.

Attachment 11
Empirical Derivation of Site-Specific Dose Factors

GAMMA-AIR-DOSE FACTOR
A site-specific, gamma-air-dose factor has been derived from historical data in accordance with the following equation.

$$M_{avg} = \Sigma (M_i) (f_i) \qquad \text{Eq. 3F}$$

M_{avg} = the empirically derived, site-specific, gamma-air-dose factor due to all noble gases released during a specified time period

Values of M_{avg} have been calculated using gaseous radwaste discharge data collected over several years.

The results of the calculations appear in the Table on page 5 of this attachment.

M_i = the air dose factor due to gamma emissions for each identified noble gas radionuclide, i (mrad/yr per microcurie/cubic meter)

The gamma air dose factors have been obtained from Regulatory Guide 1.109, Appendix B, Table B-1.

The gamma air dose factors for various noble gas radionuclides are tabulated in Attachment 10.

f_i = a fraction which represents the relative activity contribution of noble gas radionuclide i to the total noble gas activity for TYPICAL GASEOUS EFFLUENTS (unitless)

This value has been calculated for all gaseous radwaste discharges for the years 1986, 1987, and 1988 in accordance with equation 3R on Attachment 5.

Attachment 11
Empirical Derivation of Site-Specific Dose Factors

BETA-AIR-DOSE FACTOR

A site-specific, beta-air-dose factor has been derived from historical data in accordance with the following equation.

$$N_{avg} = \Sigma (N_i) (f_i) \qquad \text{Eq. 4F}$$

N_{avg} = the empirically derived, site-specific, beta-air-dose factor due to all noble gases released during a specified time period

Values of N_{avg} have been calculated using gaseous radwaste discharge data collected over several years.

The results of the calculations appear in the Table on page 5 of this attachment.

N_i = the air dose factor due to beta emissions for each identified noble gas radionuclide, i (mrad/yr per microcurie/cubic meter)

The beta air dose factors have been obtained from Regulatory Guide 1.109, Appendix B, Table B-1.

The beta air dose factors for various noble gas radionuclides are tabulated in Attachment 10 (Attachment 1 of old ODCM).

f_i = a fraction which represents the relative activity contribution of noble gas radionuclide i to the total noble gas activity for TYPICAL GASEOUS EFFLUENTS (unitless)

This value has been calculated for all gaseous radwaste discharges for the years 1986, 1987, and 1988 in accordance with equation 3R on Attachment 5.

Attachment 11
Empirical Derivation of Site-Specific Dose Factors

SITE-SPECIFIC, AVERAGE DOSE FACTORS

Year	K_{avg}	L_{avg}	M_{avg}	N_{avg}
1986	330	790	390	1100
1987	340	810	400	1100
1988	390	960	450	1200
Average	350	850	410	1100
Maximum % difference	11%	13%	10%	9%

As can be seen from the above table, the percent difference between the yearly dose factors and the 3-year average dose factors range from 9% to 13%. This variability is minor considering other areas of uncertainty inherent in the environmental dose calculation models.

It should be noted that the empirically-derived, site-specific, average dose factors listed in the above table shall only rarely be used. In those rare instances where empirically-derived, site-specific, average dose factors are used, the results shall be carefully evaluated by qualified members of the facility staff to ensure the estimated doses are only a small fraction of the Control limits. Additionally, the doses shall be recalculated using the RIGOROUS METHODS prior to submitting the Radioactive Effluent Release Report.

Attachment 12
Gaseous Effluent Pathway Dose Factors

GRASS-COW-MEAT DOSE FACTORS
ADULT
(m2*mrem/yr per uCi/sec)

Nuclide	Bone	Liver	Tbody	Thyroid	Kidney	Lung	GItract
H-3	0.000E+00	3.250E+02	3.250E+02	3.250E+02	3.250E+02	3.250E+02	3.250E+02
C-14	3.330E+05	6.660E+04	6.660E+04	6.660E+04	6.660E+04	6.660E+04	6.660E+04
NA-24	1.840E-03	1.840E-03	1.840E-03	1.840E-03	1.840E-03	1.840E-03	1.840E-03
P-32	4.650E+09	2.890E+08	1.800E+08	0.000E+00	0.000E+00	0.000E+00	5.230E+08
CR-51	0.000E+00	0.000E+00	7.070E+03	4.220E+03	1.560E+03	9.380E+03	1.780E+06
MN-54	0.000E+00	9.150E+06	1.750E+06	0.000E+00	2.720E+06	0.000E+00	2.800E+07
MN-56	0.000E+00	0.000E+00	0.000E+00	0.000E+00	0.000E+00	0.000E+00	0.000E+00
FE-55	2.930E+08	2.020E+08	4.720E+07	0.000E+00	0.000E+00	1.130E+08	1.160E+08
FE-59	2.670E+08	6.270E+08	2.400E+08	0.000E+00	0.000E+00	1.750E+08	2.090E+09
CO-57	0.000E+00	5.640E+06	9.370E+06	0.000E+00	0.000E+00	0.000E+00	1.430E+08
CO-58	0.000E+00	1.830E+07	4.100E+07	0.000E+00	0.000E+00	0.000E+00	3.700E+08
CO-60	0.000E+00	7.520E+07	1.660E+08	0.000E+00	0.000E+00	0.000E+00	1.410E+09
NI-63	1.890E+10	1.310E+09	6.330E+08	0.000E+00	0.000E+00	0.000E+00	2.730E+08
NI-65	0.000E+00	0.000E+00	0.000E+00	0.000E+00	0.000E+00	0.000E+00	0.000E+00
CU-64	0.000E+00	2.950E-07	1.390E-07	0.000E+00	7.450E-07	0.000E+00	2.520E-05
ZN-65	3.560E+08	1.130E+09	5.120E+08	0.000E+00	7.570E+08	0.000E+00	7.130E+08
ZN-69	0.000E+00	0.000E+00	0.000E+00	0.000E+00	0.000E+00	0.000E+00	0.000E+00
BR-82	0.000E+00	0.000E+00	0.000E+00	0.000E+00	0.000E+00	0.000E+00	0.000E+00
BR-83	0.000E+00	0.000E+00	0.000E+00	0.000E+00	0.000E+00	0.000E+00	0.000E+00
BR-84	0.000E+00	0.000E+00	0.000E+00	0.000E+00	0.000E+00	0.000E+00	0.000E+00
BR-85	0.000E+00	0.000E+00	0.000E+00	0.000E+00	0.000E+00	0.000E+00	0.000E+00
RB-86	0.000E+00	4.870E+08	2.270E+08	0.000E+00	0.000E+00	0.000E+00	9.600E+07
RB-88	0.000E+00	0.000E+00	0.000E+00	0.000E+00	0.000E+00	0.000E+00	0.000E+00
RB-89	0.000E+00	0.000E+00	0.000E+00	0.000E+00	0.000E+00	0.000E+00	0.000E+00
SR-89	3.010E+08	0.000E+00	8.650E+06	0.000E+00	0.000E+00	0.000E+00	4.840E+07
SR-90	1.240E+10	0.000E+00	3.050E+09	0.000E+00	0.000E+00	0.000E+00	3.590E+08
SR-91	0.000E+00	0.000E+00	0.000E+00	0.000E+00	0.000E+00	0.000E+00	1.380E-09
SR-92	0.000E+00	0.000E+00	0.000E+00	0.000E+00	0.000E+00	0.000E+00	0.000E+00
Y-90	1.070E+02	0.000E+00	2.860E+00	0.000E+00	0.000E+00	0.000E+00	1.130E+06
Y-91M	0.000E+00	0.000E+00	0.000E+00	0.000E+00	0.000E+00	0.000E+00	0.000E+00
Y-91	1.130E+06	0.000E+00	3.030E+04	0.000E+00	0.000E+00	0.000E+00	6.240E+08
Y-92	0.000E+00	0.000E+00	0.000E+00	0.000E+00	0.000E+00	0.000E+00	0.000E+00
Y-93	0.000E+00	0.000E+00	0.000E+00	0.000E+00	0.000E+00	0.000E+00	2.080E-07

Attachment 12
Gaseous Effluent Pathway Dose Factors

GRASS-COW-MEAT DOSE FACTORS
ADULT
(m2*mrem/yr per uCi/sec)

Nuclide	Bone	Liver	Tbody	Thyroid	Kidney	Lung	Gltract
ZR-95	1.880E+06	6.040E+05	4.090E+05	0.000E+00	9.480E+05	0.000E+00	1.910E+09
ZR-97	1.830E-05	3.690E-06	1.690E-06	0.000E+00	5.580E-06	0.000E+00	1.140E+00
NB-95	2.290E+06	1.280E+06	6.860E+05	0.000E+00	1.260E+06	0.000E+00	7.750E+09
NB-97	0.000E+00	0.000E+00	0.000E+00	0.000E+00	0.000E+00	0.000E+00	0.000E+00
MO-99	0.000E+00	1.090E+05	2.070E+04	0.000E+00	2.460E+05	0.000E+00	2.520E+05
TC-99M	0.000E+00	0.000E+00	0.000E+00	0.000E+00	0.000E+00	0.000E+00	0.000E+00
TC-101	0.000E+00	0.000E+00	0.000E+00	0.000E+00	0.000E+00	0.000E+00	0.000E+00
RU-103	1.060E+08	0.000E+00	4.550E+07	0.000E+00	4.030E+08	0.000E+00	1.230E+10
RU-105	0.000E+00	0.000E+00	0.000E+00	0.000E+00	0.000E+00	0.000E+00	0.000E+00
RU-106	2.800E+09	0.000E+00	3.540E+08	0.000E+00	5.400E+09	0.000E+00	1.810E+11
RH-103M	0.000E+00	0.000E+00	0.000E+00	0.000E+00	0.000E+00	0.000E+00	0.000E+00
RH-106	0.000E+00	0.000E+00	0.000E+00	0.000E+00	0.000E+00	0.000E+00	0.000E+00
AG-110M	6.690E+06	6.190E+06	3.670E+06	0.000E+00	1.220E+07	0.000E+00	2.520E+09
SB-122	5.580E+03	5.820E+03	7.050E+04	9.250E+02	2.750E+03	1.200E+03	6.930E+05
SB-124	1.980E+09	3.740E+07	7.850E+08	4.800E+06	0.000E+00	1.540E+09	5.620E+10
SB-125	1.910E+09	2.130E+07	4.540E+08	1.940E+06	0.000E+00	1.470E+09	2.100E+10
TE-125M	3.590E+08	1.300E+08	4.810E+07	1.080E+08	1.460E+09	0.000E+00	1.430E+09
TE-127M	1.120E+09	3.990E+08	1.360E+08	2.850E+08	4.530E+09	0.000E+00	3.740E+09
TE-127	0.000E+00	0.000E+00	0.000E+00	0.000E+00	1.090E-09	0.000E+00	2.100E-08
TE-129M	1.140E+09	4.270E+08	1.810E+08	3.930E+08	4.770E+09	0.000E+00	5.760E+09
TE-129	0.000E+00	0.000E+00	0.000E+00	0.000E+00	0.000E+00	0.000E+00	0.000E+00
TE-131M	4.510E+02	2.210E+02	1.840E+02	3.500E+02	2.240E+03	0.000E+00	2.190E+04
TE-131	0.000E+00	0.000E+00	0.000E+00	0.000E+00	0.000E+00	0.000E+00	0.000E+00
TE-132	1.400E+06	9.070E+05	8.510E+05	1.000E+06	8.730E+06	0.000E+00	4.290E+07
I-130	2.350E-06	6.940E-06	2.740E-06	5.880E-04	1.080E-05	0.000E+00	5.980E-06
I-131	1.080E+07	1.540E+07	8.830E+06	5.050E+09	2.640E+07	0.000E+00	4.070E+06
I-132	0.000E+00	0.000E+00	0.000E+00	0.000E+00	0.000E+00	0.000E+00	0.000E+00
I-133	4.300E-01	7.470E-01	2.280E-01	1.100E+02	1.300E+00	0.000E+00	6.720E-01
I-134	0.000E+00	0.000E+00	0.000E+00	0.000E+00	0.000E+00	0.000E+00	0.000E+00
I-135	0.000E+00	0.000E+00	0.000E+00	0.000E+00	0.000E+00	0.000E+00	0.000E+00
CS-134	6.570E+08	1.560E+09	1.280E+09	0.000E+00	5.060E+08	1.680E+08	2.740E+07
CS-136	1.180E+07	4.670E+07	3.360E+07	0.000E+00	2.600E+07	3.560E+06	5.300E+06
CS-137	8.720E+08	1.190E+09	7.810E+08	0.000E+00	4.050E+08	1.350E+08	2.310E+07
CS-138	0.000E+00	0.000E+00	0.000E+00	0.000E+00	0.000E+00	0.000E+00	0.000E+00

Attachment 12
Gaseous Effluent Pathway Dose Factors

GRASS-COW-MEAT DOSE FACTORS
ADULT
(m2*mrem/yr per uCi/sec)

Nuclide	Bone	Liver	Tbody	Thyroid	Kidney	Lung	Gitract
BA-139	0.000E+00	0.000E+00	0.000E+00	0.000E+00	0.000E+00	0.000E+00	0.000E+00
BA-140	2.880E+07	3.610E+04	1.890E+06	0.000E+00	1.230E+04	2.070E+04	5.920E+07
BA-141	0.000E+00	0.000E+00	0.000E+00	0.000E+00	0.000E+00	0.000E+00	0.000E+00
BA-142	0.000E+00	0.000E+00	0.000E+00	0.000E+00	0.000E+00	0.000E+00	0.000E+00
LA-140	3.600E-02	1.810E-02	4.790E-03	0.000E+00	0.000E+00	0.000E+00	1.330E+03
LA-142	0.000E+00	0.000E+00	0.000E+00	0.000E+00	0.000E+00	0.000E+00	0.000E+00
CE-141	1.400E+04	9.480E+03	1.080E+03	0.000E+00	4.400E+03	0.000E+00	3.620E+07
CE-143	2.090E-02	1.550E+01	1.710E-03	0.000E+00	6.800E-03	0.000E+00	5.780E+02
CE-144	1.460E+06	6.090E+05	7.830E+04	0.000E+00	3.610E+05	0.000E+00	4.930E+08
PR-143	2.130E+04	8.540E+03	1.060E+03	0.000E+00	4.930E+03	0.000E+00	9.330E+07
PR-144	0.000E+00	0.000E+00	0.000E+00	0.000E+00	0.000E+00	0.000E+00	0.000E+00
ND-147	7.080E+03	8.180E+03	4.900E+02	0.000E+00	4.780E+03	0.000E+00	3.930E+07
EU-154	8.030E+06	9.870E+08	7.020E+05	0.000E+00	4.720E+06	0.000E+00	7.150E+08
EU-155	1.110E+06	1.580E+05	1.020E+05	0.000E+00	7.300E+05	0.000E+00	1.240E+08
W-187	2.160E-02	1.810E-02	6.320E-03	0.000E+00	0.000E+00	0.000E+00	5.920E+00
NP-239	2.560E-01	2.510E-02	1.390E-02	0.000E+00	7.840E-02	0.000E+00	5.150E+03

Attachment 12
Gaseous Effluent Pathway Dose Factors

GRASS-COW-MEAT DOSE FACTORS
TEEN
(m2*mrem/yr per uCi/sec)

Nuclide	Bone	Liver	Tbody	Thyroid	Kidney	Lung	Gitract
H-3	0.000E+00	1.940E+02	1.940E+02	1.940E+02	1.940E+02	1.940E+02	1.940E+02
C-14	2.810E+05	5.620E+04	5.620E+04	5.620E+04	5.620E+04	5.620E+04	5.620E+04
NA-24	1.470E-03	1.470E-03	1.470E-03	1.470E-03	1.470E-03	1.470E-03	1.470E-03
P-32	3.930E+09	2.440E+08	1.520E+08	0.000E+00	0.000E+00	0.000E+00	3.300E+08
CR-51	0.000E+00	0.000E+00	5.650E+03	3.140E+03	1.240E+03	8.070E+03	9.500E+05
MN-54	0.000E+00	6.980E+06	1.380E+06	0.000E+00	2.080E+06	0.000E+00	1.430E+07
MN-56	0.000E+00	0.000E+00	0.000E+00	0.000E+00	0.000E+00	0.000E+00	0.000E+00
FE-55	2.380E+08	1.690E+08	3.930E+07	0.000E+00	0.000E+00	1.070E+08	7.300E+07
FE-59	2.130E+08	4.980E+08	1.920E+08	0.000E+00	0.000E+00	1.570E+08	1.180E+09
CO-57	0.000E+00	4.530E+06	7.590E+06	0.000E+00	0.000E+00	0.000E+00	8.450E+07
CO-58	0.000E+00	1.410E+07	3.250E+07	0.000E+00	0.000E+00	0.000E+00	1.940E+08
CO-60	0.000E+00	5.830E+07	1.310E+08	0.000E+00	0.000E+00	0.000E+00	7.600E+08
NI-63	1.520E+10	1.070E+09	5.150E+08	0.000E+00	0.000E+00	0.000E+00	1.710E+08
NI-65	0.000E+00	0.000E+00	0.000E+00	0.000E+00	0.000E+00	0.000E+00	0.000E+00
CU-64	0.000E+00	2.410E-07	1.130E-07	0.000E+00	6.100E-07	0.000E+00	1.870E-05
ZN-65	2.500E+08	8.690E+08	4.050E+08	0.000E+00	5.560E+08	0.000E+00	3.680E+08
ZN-69	0.000E+00	0.000E+00	0.000E+00	0.000E+00	0.000E+00	0.000E+00	0.000E+00
BR-82	0.000E+00	0.000E+00	0.000E+00	0.000E+00	0.000E+00	0.000E+00	0.000E+00
BR-83	0.000E+00	0.000E+00	0.000E+00	0.000E+00	0.000E+00	0.000E+00	0.000E+00
BR-84	0.000E+00	0.000E+00	0.000E+00	0.000E+00	0.000E+00	0.000E+00	0.000E+00
BR-85	0.000E+00	0.000E+00	0.000E+00	0.000E+00	0.000E+00	0.000E+00	0.000E+00
RB-86	0.000E+00	4.060E+08	1.910E+08	0.000E+00	0.000E+00	0.000E+00	6.010E+07
RB-88	0.000E+00	0.000E+00	0.000E+00	0.000E+00	0.000E+00	0.000E+00	0.000E+00
RB-89	0.000E+00	0.000E+00	0.000E+00	0.000E+00	0.000E+00	0.000E+00	0.000E+00
SR-89	2.540E+08	0.000E+00	7.290E+06	0.000E+00	0.000E+00	0.000E+00	3.030E+07
SR-90	8.050E+09	0.000E+00	1.990E+09	0.000E+00	0.000E+00	0.000E+00	2.260E+08
SR-91	0.000E+00	0.000E+00	0.000E+00	0.000E+00	0.000E+00	0.000E+00	1.100E-09
SR-92	0.000E+00	0.000E+00	0.000E+00	0.000E+00	0.000E+00	0.000E+00	0.000E+00
Y-90	8.980E+01	0.000E+00	2.420E+00	0.000E+00	0.000E+00	0.000E+00	7.400E+05
Y-91M	0.000E+00	0.000E+00	0.000E+00	0.000E+00	0.000E+00	0.000E+00	0.000E+00
Y-91	9.560E+05	0.000E+00	2.560E+04	0.000E+00	0.000E+00	0.000E+00	3.920E+08
Y-92	0.000E+00	0.000E+00	0.000E+00	0.000E+00	0.000E+00	0.000E+00	0.000E+00
Y-93	0.000E+00	0.000E+00	0.000E+00	0.000E+00	0.000E+00	0.000E+00	1.690E-07

Attachment 12
Gaseous Effluent Pathway Dose Factors

GRASS-COW-MEAT DOSE FACTORS
TEEN
(m2*mrem/yr per uCi/sec)

Nuclide	Bone	Liver	Tbody	Thyroid	Kidney	Lung	Gitract
ZR-95	1.510E+06	4.760E+05	3.270E+05	0.000E+00	6.990E+05	0.000E+00	1.100E+09
ZR-97	1.530E-05	3.020E-06	1.390E-06	0.000E+00	4.580E-06	0.000E+00	8.180E-01
NB-95	1.790E+06	9.940E+05	5.470E+05	0.000E+00	9.640E+05	0.000E+00	4.250E+09
NB-97	0.000E+00	0.000E+00	0.000E+00	0.000E+00	0.000E+00	0.000E+00	0.000E+00
MO-99	0.000E+00	8.980E+04	1.710E+04	0.000E+00	2.060E+05	0.000E+00	1.610E+05
TC-99M	0.000E+00	0.000E+00	0.000E+00	0.000E+00	0.000E+00	0.000E+00	0.000E+00
TC-101	0.000E+00	0.000E+00	0.000E+00	0.000E+00	0.000E+00	0.000E+00	0.000E+00
RU-103	8.600E+07	0.000E+00	3.680E+07	0.000E+00	3.030E+08	0.000E+00	7.180E+09
RU-105	0.000E+00	0.000E+00	0.000E+00	0.000E+00	0.000E+00	0.000E+00	0.000E+00
RU-106	2.360E+09	0.000E+00	2.970E+08	0.000E+00	4.550E+09	0.000E+00	1.130E+11
RH-103M	0.000E+00	0.000E+00	0.000E+00	0.000E+00	0.000E+00	0.000E+00	0.000E+00
RH-106	0.000E+00	0.000E+00	0.000E+00	0.000E+00	0.000E+00	0.000E+00	0.000E+00
AG-110M	5.060E+06	4.790E+06	2.910E+06	0.000E+00	9.140E+06	0.000E+00	1.350E+09
SB-122	3.300E+03	3.440E+03	4.170E+04	5.460E+02	1.620E+03	7.080E+02	4.100E+05
SB-124	1.620E+09	2.980E+07	6.310E+08	3.670E+06	0.000E+00	1.410E+09	3.260E+10
SB-125	1.560E+09	1.710E+07	3.660E+08	1.490E+06	0.000E+00	1.370E+09	1.220E+10
TE-125M	3.030E+08	1.090E+08	4.050E+07	8.470E+07	0.000E+00	0.000E+00	8.940E+08
TE-127M	9.410E+08	3.340E+08	1.120E+08	2.240E+08	3.820E+09	0.000E+00	2.350E+09
TE-127	0.000E+00	0.000E+00	0.000E+00	0.000E+00	0.000E+00	0.000E+00	1.750E-08
TE-129M	9.580E+08	3.560E+08	1.520E+08	3.090E+08	4.010E+09	0.000E+00	3.600E+09
TE-129	0.000E+00	0.000E+00	0.000E+00	0.000E+00	0.000E+00	0.000E+00	0.000E+00
TE-131M	3.760E+02	1.800E+02	1.500E+02	2.710E+02	1.880E+03	0.000E+00	1.450E+04
TE-131	0.000E+00	0.000E+00	0.000E+00	0.000E+00	0.000E+00	0.000E+00	0.000E+00
TE-132	1.150E+06	7.260E+05	6.840E+05	7.660E+05	6.970E+06	0.000E+00	2.300E+07
I-130	1.890E-06	5.480E-06	2.190E-06	4.470E-04	8.440E-06	0.000E+00	4.210E-05
I-131	8.950E+06	1.250E+07	6.730E+06	3.660E+09	2.160E+07	0.000E+00	2.480E+06
I-132	0.000E+00	0.000E+00	0.000E+00	0.000E+00	0.000E+00	0.000E+00	0.000E+00
I-133	3.590E-01	6.100E-01	1.860E-01	8.510E+01	1.070E+00	0.000E+00	4.610E-01
I-134	0.000E+00	0.000E+00	0.000E+00	0.000E+00	0.000E+00	0.000E+00	0.000E+00
I-135	0.000E+00	0.000E+00	0.000E+00	0.000E+00	0.000E+00	0.000E+00	0.000E+00
CS-134	5.230E+08	1.230E+09	5.710E+08	0.000E+00	3.910E+08	1.490E+08	1.530E+07
CS-136	9.220E+06	3.630E+07	2.440E+07	0.000E+00	1.970E+07	3.110E+06	2.920E+06
CS-137	7.240E+08	9.630E+08	3.360E+08	0.000E+00	3.280E+08	1.270E+08	1.370E+07
CS-138	0.000E+00	0.000E+00	0.000E+00	0.000E+00	0.000E+00	0.000E+00	0.000E+00

Attachment 12
Gaseous Effluent Pathway Dose Factors

GRASS-COW-MEAT DOSE FACTORS
TEEN
(m2*mrem/yr per uCi/sec)

Nuclide	Bone	Liver	Tbody	Thyroid	Kidney	Lung	Gltract
BA-139	0.000E+00	0.000E+00	0.000E+00	0.000E+00	0.000E+00	0.000E+00	0.000E+00
BA-140	2.380E+07	2.910E+04	1.530E+06	0.000E+00	9.880E+03	1.960E+04	3.670E+07
BA-141	0.000E+00	0.000E+00	0.000E+00	0.000E+00	0.000E+00	0.000E+00	0.000E+00
BA-142	0.000E+00	0.000E+00	0.000E+00	0.000E+00	0.000E+00	0.000E+00	0.000E+00
LA-140	2.960E-02	1.450E-02	3.870E-03	0.000E+00	0.000E+00	0.000E+00	8.350E+02
LA-142	0.000E+00	0.000E+00	0.000E+00	0.000E+00	0.000E+00	0.000E+00	0.000E+00
CE-141	1.180E+04	7.860E+03	9.030E+02	0.000E+00	3.700E+03	0.000E+00	2.250E+07
CE-143	1.760E-02	1.280E+01	1.430E-03	0.000E+00	5.740E-03	0.000E+00	3.850E+02
CE-144	1.230E+06	5.080E+05	6.600E+04	0.000E+00	3.040E+05	0.000E+00	3.090E+08
PR-143	1.790E+04	7.150E+03	8.920E+02	0.000E+00	4.160E+03	0.000E+00	5.900E+07
PR-144	0.000E+00	0.000E+00	0.000E+00	0.000E+00	0.000E+00	0.000E+00	0.000E+00
ND-147	6.240E+03	6.790E+03	4.060E+02	0.000E+00	3.980E+03	0.000E+00	2.450E+07
EU-154	6.090E+06	7.870E+05	5.540E+05	0.000E+00	3.520E+06	0.000E+00	4.160E+08
EU-155	1.330E+06	1.290E+05	7.970E+04	0.000E+00	5.030E+05	0.000E+00	7.380E+08
W-187	1.810E-02	1.480E-02	5.170E-03	0.000E+00	0.000E+00	0.000E+00	3.990E+00
NP-239	2.230E-01	2.110E-02	1.170E-02	0.000E+00	6.610E-02	0.000E+00	3.390E+03

Attachment 12
Gaseous Effluent Pathway Dose Factors

GRASS-COW-MEAT DOSE FACTORS
CHILD
(m2*mrem/yr per uCi/sec)

Nuclide	Bone	Liver	Tbody	Thyroid	Kidney	Lung	Gltract
H-3	0.000E+00	2.340E+02	2.340E+02	2.340E+02	2.340E+02	2.340E+02	2.340E+02
C-14	5.290E+05	1.060E+05	1.060E+05	1.060E+05	1.060E+05	1.060E+05	1.060E+05
NA-24	2.340E-03	2.340E-03	2.340E-03	2.340E-03	2.340E-03	2.340E-03	2.340E-03
P-32	7.410E+09	3.470E+08	2.860E+08	0.000E+00	0.000E+00	0.000E+00	2.050E+08
CR-51	0.000E+00	0.000E+00	8.810E+03	4.890E+03	1.340E+03	8.930E+03	4.670E+05
MN-54	0.000E+00	7.990E+06	2.130E+06	0.000E+00	2.240E+06	0.000E+00	6.700E+06
MN-56	0.000E+00	0.000E+00	0.000E+00	0.000E+00	0.000E+00	0.000E+00	0.000E+00
FE-55	4.570E+08	2.420E+08	7.510E+07	0.000E+00	0.000E+00	1.370E+08	4.490E+07
FE-59	3.780E+08	6.120E+08	3.050E+08	0.000E+00	0.000E+00	1.770E+08	6.370E+08
CO-57	0.000E+00	5.920E+06	1.200E+07	0.000E+00	0.000E+00	0.000E+00	4.850E+07
CO-58	0.000E+00	1.650E+07	5.040E+07	0.000E+00	0.000E+00	0.000E+00	9.600E+07
CO-60	0.000E+00	6.930E+07	2.040E+08	0.000E+00	0.000E+00	0.000E+00	3.840E+08
NI-63	2.910E+10	1.560E+09	9.910E+08	0.000E+00	0.000E+00	0.000E+00	1.050E+08
NI-65	0.000E+00	0.000E+00	0.000E+00	0.000E+00	0.000E+00	0.000E+00	0.000E+00
CU-64	0.000E+00	3.240E-07	1.960E-07	0.000E+00	7.820E-07	0.000E+00	1.520E-05
ZN-65	3.750E+08	1.000E+09	6.220E+08	0.000E+00	6.300E+08	0.000E+00	1.760E+08
ZN-69	0.000E+00	0.000E+00	0.000E+00	0.000E+00	0.000E+00	0.000E+00	0.000E+00
BR-82	0.000E+00	0.000E+00	0.000E+00	0.000E+00	0.000E+00	0.000E+00	0.000E+00
BR-83	0.000E+00	0.000E+00	0.000E+00	0.000E+00	0.000E+00	0.000E+00	0.000E+00
BR-84	0.000E+00	0.000E+00	0.000E+00	0.000E+00	0.000E+00	0.000E+00	0.000E+00
BR-85	0.000E+00	0.000E+00	0.000E+00	0.000E+00	0.000E+00	0.000E+00	0.000E+00
RB-86	0.000E+00	5.760E+08	3.540E+08	0.000E+00	0.000E+00	0.000E+00	3.710E+07
RB-88	0.000E+00	0.000E+00	0.000E+00	0.000E+00	0.000E+00	0.000E+00	0.000E+00
RB-89	0.000E+00	0.000E+00	0.000E+00	0.000E+00	0.000E+00	0.000E+00	0.000E+00
SR-89	4.820E+08	0.000E+00	1.380E+07	0.000E+00	0.000E+00	0.000E+00	1.860E+07
SR-90	1.040E+10	0.000E+00	2.640E+09	0.000E+00	0.000E+00	0.000E+00	1.400E+08
SR-91	0.000E+00	0.000E+00	0.000E+00	0.000E+00	0.000E+00	0.000E+00	1.010E-09
SR-92	0.000E+00	0.000E+00	0.000E+00	0.000E+00	0.000E+00	0.000E+00	0.000E+00
Y-90	1.700E+02	0.000E+00	4.550E+00	0.000E+00	0.000E+00	0.000E+00	4.840E+05
Y-91M	0.000E+00	0.000E+00	0.000E+00	0.000E+00	0.000E+00	0.000E+00	0.000E+00
Y-91	1.810E+06	0.000E+00	4.830E+04	0.000E+00	0.000E+00	0.000E+00	2.410E+08
Y-92	0.000E+00	0.000E+00	0.000E+00	0.000E+00	0.000E+00	0.000E+00	0.000E+00
Y-93	0.000E+00	0.000E+00	0.000E+00	0.000E+00	0.000E+00	0.000E+00	1.550E-07

Attachment 12
Gaseous Effluent Pathway Dose Factors

GRASS-COW-MEAT DOSE FACTORS
CHILD
(m2*mrem/yr per uCi/sec)

Nuclide	Bone	Liver	Tbody	Thyroid	Kidney	Lung	Gitract
ZR-95	2.680E+06	5.890E+05	5.240E+05	0.000E+00	8.430E+05	0.000E+00	6.140E+08
ZR-97	2.840E-05	4.100E-06	2.420E-06	0.000E+00	5.890E-06	0.000E+00	6.210E-01
NB-95	3.090E+06	1.200E+06	8.610E+05	0.000E+00	1.130E+06	0.000E+00	2.230E+09
NB-97	0.000E+00	0.000E+00	0.000E+00	0.000E+00	0.000E+00	0.000E+00	0.000E+00
MO-99	0.000E+00	1.250E+05	3.090E+04	0.000E+00	2.670E+05	0.000E+00	1.030E+05
TC-99M	0.000E+00	0.000E+00	0.000E+00	0.000E+00	0.000E+00	0.000E+00	0.000E+00
TC-101	0.000E+00	0.000E+00	0.000E+00	0.000E+00	0.000E+00	0.000E+00	0.000E+00
RU-103	1.560E+08	0.000E+00	5.980E+07	0.000E+00	3.920E+08	0.000E+00	4.020E+09
RU-105	0.000E+00	0.000E+00	0.000E+00	0.000E+00	0.000E+00	0.000E+00	0.000E+00
RU-106	4.440E+09	0.000E+00	5.540E+08	0.000E+00	5.990E+09	0.000E+00	6.900E+10
RH-103M	0.000E+00	0.000E+00	0.000E+00	0.000E+00	0.000E+00	0.000E+00	0.000E+00
RH-106	0.000E+00	0.000E+00	0.000E+00	0.000E+00	0.000E+00	0.000E+00	0.000E+00
AG-110M	8.400E+06	5.670E+06	4.530E+06	0.000E+00	1.060E+07	0.000E+00	6.750E+08
SB-122	2.080E+03	2.170E+03	2.630E+04	3.450E+02	1.020E+03	4.460E+02	2.580E+05
SB-124	2.930E+09	3.800E+07	1.030E+09	6.460E+06	0.000E+00	1.620E+09	1.830E+10
SB-125	2.850E+09	2.190E+07	5.960E+08	2.640E+06	0.000E+00	1.590E+09	6.800E+09
TE-125M	5.690E+08	1.540E+08	7.590E+07	1.600E+08	0.000E+00	0.000E+00	5.490E+08
TE-127M	1.770E+09	4.780E+08	2.110E+08	4.240E+08	5.060E+09	0.000E+00	1.440E+09
TE-127	0.000E+00	0.000E+00	0.000E+00	0.000E+00	1.210E-09	0.000E+00	1.660E-08
TE-129M	1.810E+09	5.040E+08	2.800E+08	5.820E+08	5.300E+09	0.000E+00	2.200E+09
TE-129	0.000E+00	0.000E+00	0.000E+00	0.000E+00	0.000E+00	0.000E+00	0.000E+00
TE-131M	7.000E+02	2.420E+02	2.580E+02	4.980E+02	2.340E+03	0.000E+00	9.820E+03
TE-131	0.000E+00	0.000E+00	0.000E+00	0.000E+00	0.000E+00	0.000E+00	0.000E+00
TE-132	2.090E+06	9.270E+05	1.120E+06	1.350E+06	8.600E+06	0.000E+00	9.330E+06
I-130	3.390E-06	6.850E-06	3.530E-06	7.540E-04	1.020E-05	0.000E+00	3.200E-06
I-131	1.660E+07	1.670E+07	9.490E+06	5.520E+09	2.740E+07	0.000E+00	1.490E+06
I-132	0.000E+00	0.000E+00	0.000E+00	0.000E+00	0.000E+00	0.000E+00	0.000E+00
I-133	6.680E-01	8.260E-01	3.120E-01	1.530E+02	1.380E+00	0.000E+00	3.330E-01
I-134	0.000E+00	0.000E+00	0.000E+00	0.000E+00	0.000E+00	0.000E+00	0.000E+00
I-135	0.000E+00	0.000E+00	0.000E+00	0.000E+00	0.000E+00	0.000E+00	0.000E+00
CS-134	9.220E+08	1.510E+09	3.190E+08	0.000E+00	4.690E+08	1.680E+08	8.150E+06
CS-136	1.590E+07	4.370E+07	2.830E+07	0.000E+00	2.330E+07	3.470E+06	1.540E+06
CS-137	1.330E+09	1.280E+09	1.880E+08	0.000E+00	4.160E+08	1.500E+08	7.990E+06
CS-138	0.000E+00	0.000E+00	0.000E+00	0.000E+00	0.000E+00	0.000E+00	0.000E+00

Attachment 12
Gaseous Effluent Pathway Dose Factors

GRASS-COW-MEAT DOSE FACTORS
CHILD
(m2*mrem/yr per uCi/sec)

Nuclide	Bone	Liver	Tbody	Thyroid	Kidney	Lung	Gltract
BA-139	0.000E+00	0.000E+00	0.000E+00	0.000E+00	0.000E+00	0.000E+00	0.000E+00
BA-140	4.390E+07	3.850E+04	2.560E+06	0.000E+00	1.250E+04	2.290E+04	2.220E+07
BA-141	0.000E+00	0.000E+00	0.000E+00	0.000E+00	0.000E+00	0.000E+00	0.000E+00
BA-142	0.000E+00	0.000E+00	0.000E+00	0.000E+00	0.000E+00	0.000E+00	0.000E+00
LA-140	5.410E-02	1.890E-02	6.380E-03	0.000E+00	0.000E+00	0.000E+00	5.270E+02
LA-142	0.000E+00	0.000E+00	0.000E+00	0.000E+00	0.000E+00	0.000E+00	0.000E+00
CE-141	2.220E+04	1.110E+04	1.640E+03	0.000E+00	4.840E+03	0.000E+00	1.380E+07
CE-143	3.300E-02	1.790E+01	2.590E-03	0.000E+00	7.510E-03	0.000E+00	2.620E+02
CE-144	2.320E+06	7.260E+05	1.240E+05	0.000E+00	4.020E+05	0.000E+00	1.890E+08
PR-143	3.390E+04	1.020E+04	1.680E+03	0.000E+00	5.510E+03	0.000E+00	3.660E+07
PR-144	0.000E+00	0.000E+00	0.000E+00	0.000E+00	0.000E+00	0.000E+00	0.000E+00
ND-147	1.170E+04	9.480E+03	7.340E+02	0.000E+00	5.200E+03	0.000E+00	1.500E+07
EU-154	1.120E+07	1.010E+06	9.190E+05	0.000E+00	4.420E+06	0.000E+00	2.340E+08
EU-155	2.330E+06	1.680E+05	1.310E+05	0.000E+00	6.280E+05	0.000E+00	4.200E+08
W-187	3.360E-02	1.990E-02	8.920E-03	0.000E+00	0.000E+00	0.000E+00	2.790E+00
NP-239	4.200E-01	3.020E-02	2.120E-02	0.000E+00	8.730E-02	0.000E+00	2.230E+03

Attachment 12
Gaseous Effluent Pathway Dose Factors

GRASS-COW-MEAT DOSE FACTORS
INFANT
(m2*mrem/yr per uCi/sec)

Nuclide	Bone	Liver	Tbody	Thyroid	Kidney	Lung	Gitract

THIS PATHWAY IS NOT APPLICABLE

TABLE INTENTIONALLY LEFT BLANK

Attachment 12
Gaseous Effluent Pathway Dose Factors

VEGETATION DOSE FACTORS
ADULT
(m2*mrem/yr per uCi/sec)

Nuclide	Bone	Liver	Tbody	Thyroid	Kidney	Lung	GItract
H-3	0.000E+00	2.260E+03	2.260E+03	2.260E+03	2.260E+03	2.260E+03	2.260E+03
C-14	8.970E+05	1.790E+05	1.790E+05	1.790E+05	1.790E+05	1.790E+05	1.790E+05
NA-24	2.760E+05	2.760E+05	2.760E+05	2.760E+05	2.760E+05	2.760E+05	2.760E+05
P-32	1.400E+09	8.730E+07	5.420E+07	0.000E+00	0.000E+00	0.000E+00	1.580E+08
CR-51	0.000E+00	0.000E+00	4.660E+04	2.790E+04	1.030E+04	6.190E+04	1.170E+07
MN-54	0.000E+00	3.110E+08	5.940E+07	0.000E+00	9.270E+07	0.000E+00	9.540E+08
MN-56	0.000E+00	1.610E+01	2.850E+00	0.000E+00	2.040E+01	0.000E+00	5.130E+02
FE-55	2.090E+08	1.450E+08	3.370E+07	0.000E+00	0.000E+00	8.060E+07	8.290E+07
FE-59	1.270E+08	2.990E+08	1.140E+08	0.000E+00	0.000E+00	8.350E+07	9.960E+08
CO-57	0.000E+00	1.170E+07	1.950E+07	0.000E+00	0.000E+00	0.000E+00	2.970E+08
CO-58	0.000E+00	3.090E+07	6.920E+07	0.000E+00	0.000E+00	0.000E+00	6.260E+08
CO-60	0.000E+00	1.670E+08	3.690E+08	0.000E+00	0.000E+00	0.000E+00	3.140E+09
NI-63	1.040E+10	7.210E+08	3.490E+08	0.000E+00	0.000E+00	0.000E+00	1.500E+08
NI-65	6.150E+01	7.990E+00	3.650E+00	0.000E+00	0.000E+00	0.000E+00	2.030E+02
CU-64	0.000E+00	9.270E+03	4.350E+03	0.000E+00	2.340E+04	0.000E+00	7.900E+05
ZN-65	3.170E+08	1.010E+09	4.560E+08	0.000E+00	6.750E+08	0.000E+00	6.360E+08
ZN-69	8.750E-06	1.670E-05	1.160E-06	0.000E+00	1.090E-05	0.000E+00	2.510E-06
BR-82	0.000E+00	0.000E+00	1.510E+06	0.000E+00	0.000E+00	0.000E+00	1.730E+06
BR-83	0.000E+00	0.000E+00	3.210E+00	0.000E+00	0.000E+00	0.000E+00	4.630E+00
BR-84	0.000E+00	0.000E+00	0.000E+00	0.000E+00	0.000E+00	0.000E+00	0.000E+00
BR-85	0.000E+00	0.000E+00	0.000E+00	0.000E+00	0.000E+00	0.000E+00	0.000E+00
RB-86	0.000E+00	2.190E+08	1.020E+08	0.000E+00	0.000E+00	0.000E+00	4.320E+07
RB-88	0.000E+00	0.000E+00	0.000E+00	0.000E+00	0.000E+00	0.000E+00	0.000E+00
RB-89	0.000E+00	0.000E+00	0.000E+00	0.000E+00	0.000E+00	0.000E+00	0.000E+00
SR-89	9.960E+09	0.000E+00	2.860E+08	0.000E+00	0.000E+00	0.000E+00	1.600E+09
SR-90	6.050E+11	0.000E+00	1.480E+11	0.000E+00	0.000E+00	0.000E+00	1.750E+10
SR-91	3.200E+05	0.000E+00	1.290E+04	0.000E+00	0.000E+00	0.000E+00	1.520E+06
SR-92	4.270E+02	0.000E+00	1.850E+01	0.000E+00	0.000E+00	0.000E+00	8.460E+03
Y-90	1.330E+04	0.000E+00	3.560E+02	0.000E+00	0.000E+00	0.000E+00	1.410E+08
Y-91M	5.830E-09	0.000E+00	0.000E+00	0.000E+00	0.000E+00	0.000E+00	1.710E-08
Y-91	5.130E+06	0.000E+00	1.370E+05	0.000E+00	0.000E+00	0.000E+00	2.820E+09
Y-92	9.010E-01	0.000E+00	2.630E-02	0.000E+00	0.000E+00	0.000E+00	1.580E+04
Y-93	1.740E+02	0.000E+00	4.800E+00	0.000E+00	0.000E+00	0.000E+00	5.520E+06

Attachment 12
Gaseous Effluent Pathway Dose Factors

VEGETATION DOSE FACTORS
ADULT
(m2*mrem/yr per uCi/sec)

Nuclide	Bone	Liver	Tbody	Thyroid	Kidney	Lung	Gltract
ZR-95	1.190E+06	3.810E+05	2.580E+05	0.000E+00	5.970E+05	0.000E+00	1.210E+09
ZR-97	3.330E+02	6.730E+01	3.080E+01	0.000E+00	1.020E+02	0.000E+00	2.080E+07
NB-95	1.420E+05	7.910E+04	4.250E+04	0.000E+00	7.810E+04	0.000E+00	4.800E+08
NB-97	2.900E-06	7.340E-07	2.680E-07	0.000E+00	8.560E-07	0.000E+00	2.710E-03
MO-99	0.000E+00	6.250E+06	1.190E+06	0.000E+00	1.410E+07	0.000E+00	1.450E+07
TC-99M	3.060E+00	8.660E+00	1.100E+02	0.000E+00	1.320E+02	4.240E+00	5.120E+03
TC-101	0.000E+00	0.000E+00	0.000E+00	0.000E+00	0.000E+00	0.000E+00	0.000E+00
RU-103	4.800E+06	0.000E+00	2.070E+06	0.000E+00	1.830E+07	0.000E+00	5.610E+08
RU-105	5.390E+01	0.000E+00	2.130E+01	0.000E+00	6.960E+02	0.000E+00	3.300E+04
RU-106	1.930E+08	0.000E+00	2.440E+07	0.000E+00	3.720E+08	0.000E+00	1.250E+10
RH-103M	0.000E+00	0.000E+00	0.000E+00	0.000E+00	0.000E+00	0.000E+00	0.000E+00
RH-106	0.000E+00	0.000E+00	0.000E+00	0.000E+00	0.000E+00	0.000E+00	0.000E+00
AG-110M	1.060E+07	9.760E+06	5.800E+06	0.000E+00	1.920E+07	0.000E+00	3.980E+09
SB-122	7.500E+05	7.820E+05	9.470E+06	1.240E+05	3.690E+05	1.610E+05	9.320E+07
SB-124	1.040E+08	1.960E+06	4.110E+07	2.520E+05	0.000E+00	8.080E+07	2.950E+09
SB-125	1.360E+08	1.520E+06	3.250E+07	1.390E+05	0.000E+00	1.050E+08	1.500E+09
TE-125M	9.660E+07	3.500E+07	1.290E+07	2.900E+07	3.930E+08	0.000E+00	3.860E+08
TE-127M	3.490E+08	1.250E+08	4.260E+07	8.920E+07	1.420E+09	0.000E+00	1.170E+09
TE-127	5.760E+03	2.070E+03	1.250E+03	4.270E+03	2.350E+04	0.000E+00	4.540E+05
TE-129M	2.550E+08	9.500E+07	4.030E+07	8.750E+07	1.060E+09	0.000E+00	1.280E+09
TE-129	6.650E-04	2.500E-04	1.620E-04	5.100E-04	2.790E-03	0.000E+00	5.020E-04
TE-131M	9.120E+05	4.460E+05	3.720E+05	7.060E+05	4.520E+06	0.000E+00	4.430E+07
TE-131	0.000E+00	0.000E+00	0.000E+00	0.000E+00	0.000E+00	0.000E+00	0.000E+00
TE-132	4.290E+06	2.770E+06	2.600E+06	3.060E+06	2.670E+07	0.000E+00	1.310E+08
I-130	3.960E+05	1.170E+06	4.610E+05	9.900E+07	1.820E+06	0.000E+00	1.010E+06
I-131	8.090E+07	1.160E+08	6.630E+07	3.790E+10	1.980E+08	0.000E+00	3.050E+07
I-132	5.740E+01	1.540E+02	5.380E+01	5.380E+03	2.450E+02	0.000E+00	2.890E+01
I-133	2.120E+06	3.690E+06	1.120E+06	5.420E+08	6.440E+06	0.000E+00	3.310E+06
I-134	1.060E-04	2.880E-04	1.030E-04	5.000E-03	4.590E-04	0.000E+00	2.510E-07
I-135	4.080E+04	1.070E+05	3.940E+04	7.040E+06	1.710E+05	0.000E+00	1.210E+05
CS-134	4.660E+09	1.110E+10	9.070E+09	0.000E+00	3.590E+09	1.190E+09	1.940E+08
CS-136	4.200E+07	1.660E+08	1.190E+08	0.000E+00	9.240E+07	1.270E+07	1.890E+07
CS-137	6.360E+09	8.700E+09	5.700E+09	0.000E+00	2.950E+09	9.810E+08	1.680E+08
CS-138	0.000E+00	0.000E+00	0.000E+00	0.000E+00	0.000E+00	0.000E+00	0.000E+00

Attachment 12
Gaseous Effluent Pathway Dose Factors

VEGETATION DOSE FACTORS
ADULT
(m2*mrem/yr per uCi/sec)

Nuclide	Bone	Liver	Tbody	Thyroid	Kidney	Lung	Gitract
BA-139	2.950E-02	2.100E-05	8.640E-04	0.000E+00	1.960E-05	1.190E-05	5.230E-02
BA-140	1.290E+08	1.620E+05	8.430E+06	0.000E+00	5.490E+04	9.250E+04	2.650E+08
BA-141	0.000E+00	0.000E+00	0.000E+00	0.000E+00	0.000E+00	0.000E+00	0.000E+00
BA-142	0.000E+00	0.000E+00	0.000E+00	0.000E+00	0.000E+00	0.000E+00	0.000E+00
LA-140	1.970E+03	9.920E+02	2.620E+02	0.000E+00	0.000E+00	0.000E+00	7.280E+07
LA-142	1.400E-04	6.350E-05	1.580E-05	0.000E+00	0.000E+00	0.000E+00	4.640E-01
CE-141	1.960E+05	1.330E+05	1.510E+04	0.000E+00	6.170E+04	0.000E+00	5.080E+08
CE-143	1.000E+03	7.420E+05	8.210E+01	0.000E+00	3.260E+02	0.000E+00	2.770E+07
CE-144	3.290E+07	1.380E+07	1.770E+06	0.000E+00	8.160E+06	0.000E+00	1.110E+10
PR-143	6.340E+04	2.540E+04	3.140E+03	0.000E+00	1.470E+04	0.000E+00	2.780E+08
PR-144	0.000E+00	0.000E+00	0.000E+00	0.000E+00	0.000E+00	0.000E+00	0.000E+00
ND-147	3.340E+04	3.860E+04	2.310E+03	0.000E+00	2.250E+04	0.000E+00	1.850E+08
EU-154	4.850E+07	5.970E+06	4.250E+06	0.000E+00	2.860E+07	0.000E+00	4.320E+09
EU-155	6.710E+06	9.510E+05	6.140E+05	0.000E+00	4.390E+06	0.000E+00	7.490E+08
W-187	3.820E+04	3.190E+04	1.120E+04	0.000E+00	0.000E+00	0.000E+00	1.050E+07
NP-239	1.420E+03	1.400E+02	7.720E+01	0.000E+00	4.370E+02	0.000E+00	2.870E+07

Attachment 12
Gaseous Effluent Pathway Dose Factors

VEGETATION DOSE FACTORS
TEEN
(m2*mrem/yr per uCi/sec)

Nuclide	Bone	Liver	Tbody	Thyroid	Kidney	Lung	Gltract
H-3	0.000E+00	2.590E+03	2.590E+03	2.590E+03	2.590E+03	2.590E+03	2.590E+03
C-14	1.450E+06	2.910E+05	2.910E+05	2.910E+05	2.910E+05	2.910E+05	2.910E+05
NA-24	2.450E+05	2.450E+05	2.450E+05	2.450E+05	2.450E+05	2.450E+05	2.450E+05
P-32	1.610E+09	9.960E+07	6.230E+07	0.000E+00	0.000E+00	0.000E+00	1.350E+08
CR-51	0.000E+00	0.000E+00	6.200E+04	3.440E+04	1.360E+04	8.850E+04	1.040E+07
MN-54	0.000E+00	4.520E+08	8.970E+07	0.000E+00	1.350E+08	0.000E+00	9.270E+08
MN-56	0.000E+00	1.450E+01	2.580E+00	0.000E+00	1.830E+01	0.000E+00	9.540E+02
FE-55	3.250E+08	2.310E+08	5.380E+07	0.000E+00	0.000E+00	1.460E+08	9.980E+07
FE-59	1.810E+08	4.220E+08	1.630E+08	0.000E+00	0.000E+00	1.330E+08	9.980E+08
CO-57	0.000E+00	1.790E+07	3.000E+07	0.000E+00	0.000E+00	0.000E+00	3.340E+08
CO-58	0.000E+00	4.380E+07	1.010E+08	0.000E+00	0.000E+00	0.000E+00	6.040E+08
CO-60	0.000E+00	2.490E+08	5.600E+08	0.000E+00	0.000E+00	0.000E+00	3.240E+09
NI-63	1.610E+10	1.130E+09	5.450E+08	0.000E+00	0.000E+00	0.000E+00	1.810E+08
NI-65	5.730E+01	7.320E+00	3.330E+00	0.000E+00	0.000E+00	0.000E+00	3.970E+02
CU-64	0.000E+00	8.400E+03	3.950E+03	0.000E+00	2.120E+04	0.000E+00	6.510E+05
ZN-65	4.240E+08	1.470E+09	6.860E+08	0.000E+00	9.410E+08	0.000E+00	6.230E+08
ZN-69	8.190E-06	1.560E-05	1.090E-06	0.000E+00	1.020E-05	0.000E+00	2.880E-05
BR-82	0.000E+00	0.000E+00	1.330E+06	0.000E+00	0.000E+00	0.000E+00	0.000E+00
BR-83	0.000E+00	0.000E+00	3.010E+00	0.000E+00	0.000E+00	0.000E+00	0.000E+00
BR-84	0.000E+00	0.000E+00	0.000E+00	0.000E+00	0.000E+00	0.000E+00	0.000E+00
BR-85	0.000E+00	0.000E+00	0.000E+00	0.000E+00	0.000E+00	0.000E+00	0.000E+00
RB-86	0.000E+00	2.730E+08	1.280E+08	0.000E+00	0.000E+00	0.000E+00	4.050E+07
RB-88	0.000E+00	0.000E+00	0.000E+00	0.000E+00	0.000E+00	0.000E+00	0.000E+00
RB-89	0.000E+00	0.000E+00	0.000E+00	0.000E+00	0.000E+00	0.000E+00	0.000E+00
SR-89	1.510E+10	0.000E+00	4.330E+08	0.000E+00	0.000E+00	0.000E+00	1.800E+09
SR-90	7.510E+11	0.000E+00	1.850E+11	0.000E+00	0.000E+00	0.000E+00	2.110E+10
SR-91	2.990E+05	0.000E+00	1.190E+04	0.000E+00	0.000E+00	0.000E+00	1.360E+06
SR-92	3.970E+02	0.000E+00	1.690E+01	0.000E+00	0.000E+00	0.000E+00	1.010E+04
Y-90	1.240E+04	0.000E+00	3.340E+02	0.000E+00	0.000E+00	0.000E+00	1.020E+08
Y-91M	5.430E-09	0.000E+00	0.000E+00	0.000E+00	0.000E+00	0.000E+00	2.560E-07
Y-91	7.870E+06	0.000E+00	2.110E+05	0.000E+00	0.000E+00	0.000E+00	3.230E+09
Y-92	8.470E-01	0.000E+00	2.450E-02	0.000E+00	0.000E+00	0.000E+00	2.320E+04
Y-93	1.630E+02	0.000E+00	4.470E+00	0.000E+00	0.000E+00	0.000E+00	4.980E+06

Attachment 12
Gaseous Effluent Pathway Dose Factors

VEGETATION DOSE FACTORS
TEEN
(m2*mrem/yr per uCi/sec)

Nuclide	Bone	Liver	Tbody	Thyroid	Kidney	Lung	Gltract
ZR-95	1.740E+06	5.490E+05	3.780E+05	0.000E+00	8.070E+05	0.000E+00	1.270E+09
ZR-97	3.090E+02	6.110E+01	2.810E+01	0.000E+00	9.260E+01	0.000E+00	1.650E+07
NB-95	1.920E+05	1.060E+05	5.860E+04	0.000E+00	1.030E+05	0.000E+00	4.550E+08
NB-97	2.690E-06	6.670E-07	2.440E-07	0.000E+00	7.800E-07	0.000E+00	1.590E-02
MO-99	0.000E+00	5.740E+06	1.090E+06	0.000E+00	1.310E+07	0.000E+00	1.030E+07
TC-99M	2.700E+00	7.540E+00	9.770E+01	0.000E+00	1.120E+02	4.190E+00	4.950E+03
TC-101	0.000E+00	0.000E+00	0.000E+00	0.000E+00	0.000E+00	0.000E+00	0.000E+00
RU-103	6.870E+06	0.000E+00	2.940E+06	0.000E+00	2.420E+07	0.000E+00	5.740E+08
RU-105	5.000E+01	0.000E+00	1.940E+01	0.000E+00	6.310E+02	0.000E+00	4.040E+04
RU-106	3.090E+08	0.000E+00	3.900E+07	0.000E+00	5.970E+08	0.000E+00	1.480E+10
RH-103M	0.000E+00	0.000E+00	0.000E+00	0.000E+00	0.000E+00	0.000E+00	0.000E+00
RH-106	0.000E+00	0.000E+00	0.000E+00	0.000E+00	0.000E+00	0.000E+00	0.000E+00
AG-110M	1.520E+07	1.440E+07	8.740E+06	0.000E+00	2.740E+07	0.000E+00	4.040E+09
SB-122	4.920E+05	5.130E+05	6.220E+06	8.150E+04	2.420E+05	1.060E+05	6.120E+07
SB-124	1.550E+08	2.850E+06	6.030E+07	3.510E+05	0.000E+00	1.350E+08	3.110E+09
SB-125	2.140E+08	2.340E+06	5.000E+07	2.040E+05	0.000E+00	1.880E+08	1.660E+09
TE-125M	1.480E+08	5.340E+07	1.980E+07	4.140E+07	0.000E+00	0.000E+00	4.370E+08
TE-127M	5.510E+08	1.960E+08	6.560E+07	1.310E+08	2.240E+09	0.000E+00	1.370E+09
TE-127	5.430E+03	1.920E+03	1.170E+03	3.740E+03	2.200E+04	0.000E+00	4.190E+05
TE-129M	3.670E+08	1.360E+08	5.810E+07	1.180E+08	1.540E+09	0.000E+00	1.380E+09
TE-129	6.220E-04	2.320E-04	1.510E-04	4.450E-04	2.610E-03	0.000E+00	3.400E-03
TE-131M	8.440E+05	4.050E+05	3.380E+05	6.090E+05	4.220E+06	0.000E+00	3.250E+07
TE-131	0.000E+00	0.000E+00	0.000E+00	0.000E+00	0.000E+00	0.000E+00	0.000E+00
TE-132	3.900E+06	2.470E+06	2.320E+06	2.600E+06	2.370E+07	0.000E+00	7.820E+07
I-130	3.540E+05	1.020E+06	4.090E+05	8.350E+07	1.580E+06	0.000E+00	7.870E+05
I-131	7.700E+07	1.080E+08	5.790E+07	3.140E+10	1.850E+08	0.000E+00	2.130E+07
I-132	5.180E+01	1.360E+02	4.870E+01	4.570E+03	2.140E+02	0.000E+00	5.910E+01
I-133	1.970E+06	3.340E+06	1.020E+06	4.660E+08	5.860E+06	0.000E+00	2.530E+06
I-134	9.590E-05	2.540E-04	9.130E-05	4.240E-03	4.010E-04	0.000E+00	3.350E-06
I-135	3.680E+04	9.480E+04	3.520E+04	6.100E+06	1.500E+05	0.000E+00	1.050E+05
CS-134	7.090E+09	1.670E+10	7.740E+09	0.000E+00	5.300E+09	2.020E+09	2.080E+08
CS-136	4.290E+07	1.690E+08	1.130E+08	0.000E+00	9.190E+07	1.450E+07	1.360E+07
CS-137	1.010E+10	1.350E+10	4.690E+09	0.000E+00	4.590E+09	1.780E+09	1.920E+08
CS-138	0.000E+00	0.000E+00	0.000E+00	0.000E+00	0.000E+00	0.000E+00	0.000E+00

Attachment 12
Gaseous Effluent Pathway Dose Factors

VEGETATION DOSE FACTORS
TEEN
(m2*mrem/yr per uCi/sec)

Nuclide	Bone	Liver	Tbody	Thyroid	Kidney	Lung	Gitract
BA-139	2.770E-02	1.950E-05	8.080E-04	0.000E+00	1.840E-05	1.340E-05	2.470E-01
BA-140	1.380E+08	1.690E+05	8.910E+06	0.000E+00	5.750E+04	1.140E+05	2.130E+08
BA-141	0.000E+00	0.000E+00	0.000E+00	0.000E+00	0.000E+00	0.000E+00	0.000E+00
BA-142	0.000E+00	0.000E+00	0.000E+00	0.000E+00	0.000E+00	0.000E+00	0.000E+00
LA-140	1.800E+03	8.840E+02	2.350E+02	0.000E+00	0.000E+00	0.000E+00	5.080E+07
LA-142	1.280E-04	5.690E-05	1.420E-05	0.000E+00	0.000E+00	0.000E+00	1.730E+00
CE-141	2.820E+05	1.880E+05	2.160E+04	0.000E+00	8.860E+04	0.000E+00	5.380E+08
CE-143	9.370E+02	6.820E+05	7.620E+01	0.000E+00	3.060E+02	0.000E+00	2.050E+07
CE-144	5.270E+07	2.180E+07	2.830E+06	0.000E+00	1.300E+07	0.000E+00	1.330E+10
PR-143	7.120E+04	2.840E+04	3.550E+03	0.000E+00	1.650E+04	0.000E+00	2.340E+08
PR-144	0.000E+00	0.000E+00	0.000E+00	0.000E+00	0.000E+00	0.000E+00	0.000E+00
ND-147	3.630E+04	3.940E+04	2.360E+03	0.000E+00	2.320E+04	0.000E+00	1.420E+08
EU-154	7.060E+07	9.120E+06	6.430E+06	0.000E+00	4.080E+07	0.000E+00	4.820E+09
EU-155	1.540E+07	1.480E+06	9.190E+05	0.000E+00	5.800E+06	0.000E+00	8.510E+09
W-187	3.550E+04	2.900E+04	1.020E+04	0.000E+00	0.000E+00	0.000E+00	7.840E+06
NP-239	1.380E+03	1.300E+02	7.240E+01	0.000E+00	4.090E+02	0.000E+00	2.100E+07

Attachment 12
Gaseous Effluent Pathway Dose Factors

VEGETATION DOSE FACTORS
CHILD
(m2*mrem/yr per uCi/sec)

Nuclide	Bone	Liver	Tbody	Thyroid	Kidney	Lung	Gltract
H-3	0.000E+00	4.010E+03	4.010E+03	4.010E+03	4.010E+03	4.010E+03	4.010E+03
C-14	3.500E+06	7.010E+05	7.010E+05	7.010E+05	7.010E+05	7.010E+05	7.010E+05
NA-24	3.830E+05	3.830E+05	3.830E+05	3.830E+05	3.830E+05	3.830E+05	3.830E+05
P-32	3.370E+09	1.580E+08	1.300E+08	0.000E+00	0.000E+00	0.000E+00	9.300E+07
CR-51	0.000E+00	0.000E+00	1.180E+05	6.540E+04	1.790E+04	1.190E+05	6.250E+06
MN-54	0.000E+00	6.610E+08	1.760E+08	0.000E+00	1.850E+08	0.000E+00	5.550E+08
MN-56	0.000E+00	1.900E+01	4.280E+00	0.000E+00	2.290E+01	0.000E+00	2.750E+03
FE-55	8.000E+08	4.240E+08	1.310E+08	0.000E+00	0.000E+00	2.400E+08	7.860E+07
FE-59	4.010E+08	6.490E+08	3.230E+08	0.000E+00	0.000E+00	1.880E+08	6.760E+08
CO-57	0.000E+00	2.990E+07	6.040E+07	0.000E+00	0.000E+00	0.000E+00	2.450E+08
CO-58	0.000E+00	6.470E+07	1.980E+08	0.000E+00	0.000E+00	0.000E+00	3.770E+08
CO-60	0.000E+00	3.780E+08	1.120E+09	0.000E+00	0.000E+00	0.000E+00	2.100E+09
NI-63	3.950E+10	2.110E+09	1.340E+09	0.000E+00	0.000E+00	0.000E+00	1.420E+08
NI-65	1.050E+02	9.890E+00	5.770E+00	0.000E+00	0.000E+00	0.000E+00	1.210E+03
CU-64	0.000E+00	1.110E+04	6.690E+03	0.000E+00	2.680E+04	0.000E+00	5.200E+05
ZN-65	8.120E+08	2.160E+09	1.350E+09	0.000E+00	1.360E+09	0.000E+00	3.800E+08
ZN-69	1.510E-05	2.180E-05	2.020E-06	0.000E+00	1.320E-05	0.000E+00	1.380E-03
BR-82	0.000E+00	0.000E+00	2.040E+06	0.000E+00	0.000E+00	0.000E+00	0.000E+00
BR-83	0.000E+00	0.000E+00	5.550E+00	0.000E+00	0.000E+00	0.000E+00	0.000E+00
BR-84	0.000E+00	0.000E+00	0.000E+00	0.000E+00	0.000E+00	0.000E+00	0.000E+00
BR-85	0.000E+00	0.000E+00	0.000E+00	0.000E+00	0.000E+00	0.000E+00	0.000E+00
RB-86	0.000E+00	4.520E+08	2.780E+08	0.000E+00	0.000E+00	0.000E+00	2.910E+07
RB-88	0.000E+00	0.000E+00	0.000E+00	0.000E+00	0.000E+00	0.000E+00	0.000E+00
RB-89	0.000E+00	0.000E+00	0.000E+00	0.000E+00	0.000E+00	0.000E+00	0.000E+00
SR-89	3.590E+10	0.000E+00	1.030E+09	0.000E+00	0.000E+00	0.000E+00	1.390E+09
SR-90	1.240E+12	0.000E+00	3.150E+11	0.000E+00	0.000E+00	0.000E+00	1.670E+10
SR-91	5.500E+05	0.000E+00	2.080E+04	0.000E+00	0.000E+00	0.000E+00	1.210E+06
SR-92	7.280E+02	0.000E+00	2.920E+01	0.000E+00	0.000E+00	0.000E+00	1.380E+04
Y-90	2.300E+04	0.000E+00	6.170E+02	0.000E+00	0.000E+00	0.000E+00	6.560E+07
Y-91M	9.940E-09	0.000E+00	0.000E+00	0.000E+00	0.000E+00	0.000E+00	1.950E-05
Y-91	1.870E+07	0.000E+00	5.010E+05	0.000E+00	0.000E+00	0.000E+00	2.490E+09
Y-92	1.560E+00	0.000E+00	4.460E-02	0.000E+00	0.000E+00	0.000E+00	4.510E+04
Y-93	3.010E+02	0.000E+00	8.250E+00	0.000E+00	0.000E+00	0.000E+00	4.480E+06

Attachment 12
Gaseous Effluent Pathway Dose Factors

VEGETATION DOSE FACTORS
CHILD
(m2*mrem/yr per uCi/sec)

Nuclide	Bone	Liver	Tbody	Thyroid	Kidney	Lung	Gltract
ZR-95	3.900E+06	8.580E+05	7.640E+05	0.000E+00	1.230E+06	0.000E+00	8.950E+08
ZR-97	5.640E+02	8.150E+01	4.810E+01	0.000E+00	1.170E+02	0.000E+00	1.230E+07
NB-95	4.100E+05	1.590E+05	1.140E+05	0.000E+00	1.500E+05	0.000E+00	2.950E+08
NB-97	4.900E-06	8.850E-07	4.130E-07	0.000E+00	9.820E-07	0.000E+00	2.730E-01
MO-99	0.000E+00	7.830E+06	1.940E+06	0.000E+00	1.670E+07	0.000E+00	6.480E+06
TC-99M	4.650E+00	9.120E+00	1.510E+02	0.000E+00	1.330E+02	4.630E+00	5.190E+03
TC-101	0.000E+00	0.000E+00	0.000E+00	0.000E+00	0.000E+00	0.000E+00	0.000E+00
RU-103	1.550E+07	0.000E+00	5.940E+06	0.000E+00	3.890E+07	0.000E+00	3.990E+08
RU-105	9.170E+01	0.000E+00	3.330E+01	0.000E+00	8.060E+02	0.000E+00	5.980E+04
RU-106	7.450E+08	0.000E+00	9.300E+07	0.000E+00	1.010E+09	0.000E+00	1.160E+10
RH-103M	0.000E+00	0.000E+00	0.000E+00	0.000E+00	0.000E+00	0.000E+00	0.000E+00
RH-106	0.000E+00	0.000E+00	0.000E+00	0.000E+00	0.000E+00	0.000E+00	0.000E+00
AG-110M	3.220E+07	2.170E+07	1.740E+07	0.000E+00	4.050E+07	0.000E+00	2.580E+09
SB-122	3.050E+05	3.180E+05	3.850E+06	5.050E+04	1.500E+05	6.540E+04	3.790E+07
SB-124	3.520E+08	4.570E+06	1.230E+08	7.780E+05	0.000E+00	1.960E+08	2.200E+09
SB-125	4.990E+08	3.850E+06	1.050E+08	4.620E+05	0.000E+00	2.780E+08	1.190E+09
TE-125M	3.510E+08	9.500E+07	4.670E+07	9.840E+07	0.000E+00	0.000E+00	3.380E+08
TE-127M	1.320E+09	3.560E+08	1.570E+08	3.160E+08	3.770E+09	0.000E+00	1.070E+09
TE-127	1.000E+04	2.700E+03	2.150E+03	6.930E+03	2.850E+04	0.000E+00	3.910E+05
TE-129M	8.540E+08	2.390E+08	1.330E+08	2.750E+08	2.510E+09	0.000E+00	1.040E+09
TE-129	1.150E-03	3.220E-04	2.740E-04	8.220E-04	3.370E-03	0.000E+00	7.170E-02
TE-131M	1.540E+06	5.330E+05	5.680E+05	1.100E+06	5.160E+06	0.000E+00	2.160E+07
TE-131	0.000E+00	0.000E+00	0.000E+00	0.000E+00	0.000E+00	0.000E+00	0.000E+00
TE-132	6.980E+06	3.090E+06	3.730E+06	4.500E+06	2.870E+07	0.000E+00	3.110E+07
I-130	6.210E+05	1.260E+06	6.470E+05	1.380E+08	1.880E+06	0.000E+00	5.870E+05
I-131	1.430E+08	1.440E+08	8.180E+07	4.760E+10	2.360E+08	0.000E+00	1.280E+07
I-132	9.200E+01	1.690E+02	7.770E+01	7.840E+03	2.590E+02	0.000E+00	1.990E+02
I-133	3.590E+06	4.440E+06	1.680E+06	8.250E+08	7.400E+06	0.000E+00	1.790E+06
I-134	1.700E-04	3.160E-04	1.460E-04	7.280E-03	4.840E-04	0.000E+00	2.100E-04
I-135	6.540E+04	1.180E+05	5.570E+04	1.040E+07	1.810E+05	0.000E+00	8.980E+04
CS-134	1.600E+10	2.630E+10	5.540E+09	0.000E+00	8.140E+09	2.920E+09	1.420E+08
CS-136	8.060E+07	2.220E+08	1.430E+08	0.000E+00	1.180E+08	1.760E+07	7.790E+06
CS-137	2.390E+10	2.290E+10	3.380E+09	0.000E+00	7.460E+09	2.680E+09	1.430E+08
CS-138	0.000E+00	0.000E+00	0.000E+00	0.000E+00	0.000E+00	0.000E+00	0.000E+00

Attachment 12
Gaseous Effluent Pathway Dose Factors

VEGETATION DOSE FACTORS
CHILD
(m2*mrem/yr per uCi/sec)

Nuclide	Bone	Liver	Tbody	Thyroid	Kidney	Lung	Gitract
BA-139	5.110E-02	2.730E-05	1.480E-03	0.000E+00	2.380E-05	1.610E-05	2.950E+00
BA-140	2.770E+08	2.430E+05	1.620E+07	0.000E+00	7.900E+04	1.450E+05	1.400E+08
BA-141	0.000E+00	0.000E+00	0.000E+00	0.000E+00	0.000E+00	0.000E+00	0.000E+00
BA-142	0.000E+00	0.000E+00	0.000E+00	0.000E+00	0.000E+00	0.000E+00	0.000E+00
LA-140	3.230E+03	1.130E+03	3.810E+02	0.000E+00	0.000E+00	0.000E+00	3.150E+07
LA-142	2.320E-04	7.400E-05	2.320E-05	0.000E+00	0.000E+00	0.000E+00	1.470E+01
CE-141	6.350E+05	3.260E+05	4.840E+04	0.000E+00	1.430E+05	0.000E+00	4.070E+08
CE-143	1.730E+03	9.360E+05	1.360E+02	0.000E+00	3.930E+02	0.000E+00	1.370E+07
CE-144	1.270E+08	3.980E+07	6.780E+06	0.000E+00	2.210E+07	0.000E+00	1.040E+10
PR-143	1.480E+05	4.460E+04	7.370E+03	0.000E+00	2.410E+04	0.000E+00	1.600E+08
PR-144	0.000E+00	0.000E+00	0.000E+00	0.000E+00	0.000E+00	0.000E+00	0.000E+00
ND-147	7.160E+04	5.800E+04	4.490E+03	0.000E+00	3.180E+04	0.000E+00	9.180E+07
EU-154	1.660E+08	1.500E+07	1.370E+07	0.000E+00	6.570E+07	0.000E+00	3.480E+09
EU-155	3.440E+07	2.480E+06	1.940E+06	0.000E+00	9.280E+06	0.000E+00	6.200E+09
W-187	6.470E+04	3.830E+04	1.720E+04	0.000E+00	0.000E+00	0.000E+00	5.380E+06
NP-239	2.550E+03	1.830E+02	1.290E+02	0.000E+00	5.300E+02	0.000E+00	1.360E+07

Attachment 12
Gaseous Effluent Pathway Dose Factors

VEGETATION DOSE FACTORS
INFANT
(m2*mrem/yr per uCi/sec)

Nuclide	Bone	Liver	Tbody	Thyroid	Kidney	Lung	Gitract

THIS PATHWAY IS NOT APPLICABLE

TABLE INTENTIONALLY LEFT BLANK

Attachment 12
Gaseous Effluent Pathway Dose Factors

GROUND PLANE DOSE FACTORS
ADULT
(m2*mrem/yr per uCi/sec)

Nuclide	Bone	Liver	Tbody	Thyroid	Kidney	Lung	Gltract

THIS PATHWAY IS NOT APPLICABLE

TABLE INTENTIONALLY LEFT BLANK

Attachment 12
Gaseous Effluent Pathway Dose Factors

GROUND PLANE DOSE FACTORS
TEEN
(m2*mrem/yr per uCi/sec)

Nuclide	Bone	Liver	Tbody	Thyroid	Kidney	Lung	Gltract
H-3	0.000E+00	0.000E+00	0.000E+00	0.000E+00	0.000E+00	0.000E+00	0.000E+00
C-14	0.000E+00	0.000E+00	0.000E+00	0.000E+00	0.000E+00	0.000E+00	0.000E+00
NA-24	1.210E+07	1.210E+07	1.210E+07	1.210E+07	1.210E+07	1.210E+07	1.210E+07
P-32	0.000E+00	0.000E+00	0.000E+00	0.000E+00	0.000E+00	0.000E+00	0.000E+00
CR-51	4.680E+06	4.680E+06	4.680E+06	4.680E+06	4.680E+06	4.680E+06	4.680E+06
MN-54	1.340E+09	1.340E+09	1.340E+09	1.340E+09	1.340E+09	1.340E+09	1.340E+09
MN-56	9.050E+05	9.050E+05	9.050E+05	9.050E+05	9.050E+05	9.050E+05	9.050E+05
FE-55	0.000E+00	0.000E+00	0.000E+00	0.000E+00	0.000E+00	0.000E+00	0.000E+00
FE-59	2.750E+08	2.750E+08	2.750E+08	2.750E+08	2.750E+08	2.750E+08	2.750E+08
CO-58	3.820E+08	3.820E+08	3.820E+08	3.820E+08	3.820E+08	3.820E+08	3.820E+08
CO-60	2.160E+10	2.160E+10	2.160E+10	2.160E+10	2.160E+10	2.160E+10	2.160E+10
NI-63	0.000E+00	0.000E+00	0.000E+00	0.000E+00	0.000E+00	0.000E+00	0.000E+00
NI-65	2.970E+05	2.970E+05	2.970E+05	2.970E+05	2.970E+05	2.970E+05	2.970E+05
CU-64	6.090E+05	6.090E+05	6.090E+05	6.090E+05	6.090E+05	6.090E+05	6.090E+05
ZN-65	7.450E+08	7.450E+08	7.450E+08	7.450E+08	7.450E+08	7.450E+08	7.450E+08
ZN-69	0.000E+00	0.000E+00	0.000E+00	0.000E+00	0.000E+00	0.000E+00	0.000E+00
BR-83	4.890E+03	4.890E+03	4.890E+03	4.890E+03	4.890E+03	4.890E+03	4.890E+03
BR-84	2.030E+05	2.030E+05	2.030E+05	2.030E+05	2.030E+05	2.030E+05	2.030E+05
BR-85	0.000E+00	0.000E+00	0.000E+00	0.000E+00	0.000E+00	0.000E+00	0.000E+00
RB-86	8.980E+06	8.980E+06	8.980E+06	8.980E+06	8.980E+06	8.980E+06	8.980E+06
RB-88	3.290E+04	3.290E+04	3.290E+04	3.290E+04	3.290E+04	3.290E+04	3.290E+04
RB-89	1.210E+05	1.210E+05	1.210E+05	1.210E+05	1.210E+05	1.210E+05	1.210E+05
SR-89	2.160E+04	2.160E+04	2.160E+04	2.160E+04	2.160E+04	2.160E+04	2.160E+04
SR-90	0.000E+00	0.000E+00	0.000E+00	0.000E+00	0.000E+00	0.000E+00	0.000E+00
SR-91	2.190E+06	2.190E+06	2.190E+06	2.190E+06	2.190E+06	2.190E+06	2.190E+06
SR-92	7.770E+05	7.770E+05	7.770E+05	7.770E+05	7.770E+05	7.770E+05	7.770E+05
Y-90	4.480E+03	4.480E+03	4.480E+03	4.480E+03	4.480E+03	4.480E+03	4.480E+03
Y-91M	1.010E+05	1.010E+05	1.010E+05	1.010E+05	1.010E+05	1.010E+05	1.010E+05
Y-91	1.080E+06	1.080E+06	1.080E+06	1.080E+06	1.080E+06	1.080E+06	1.080E+06
Y-92	1.800E+05	1.800E+05	1.800E+05	1.800E+05	1.800E+05	1.800E+05	1.800E+05
Y-93	1.850E+05	1.850E+05	1.850E+05	1.850E+05	1.850E+05	1.850E+05	1.850E+05
ZR-95	2.480E+08	2.480E+08	2.480E+08	2.480E+08	2.480E+08	2.480E+08	2.480E+08
ZR-97	2.940E+06	2.940E+06	2.940E+06	2.940E+06	2.940E+06	2.940E+06	2.940E+06
NB-95	1.360E+08	1.360E+08	1.360E+08	1.360E+08	1.360E+08	1.360E+08	1.360E+08

Attachment 12
Gaseous Effluent Pathway Dose Factors

GROUND PLANE DOSE FACTORS
TEEN
(m2*mrem/yr per uCi/sec)

Nuclide	Bone	Liver	Tbody	Thyroid	Kidney	Lung	Gltract
MO-99	4.050E+06	4.050E+06	4.050E+06	4.050E+06	4.050E+06	4.050E+06	4.050E+06
TC-99M	1.830E+05	1.830E+05	1.830E+05	1.830E+05	1.830E+05	1.830E+05	1.830E+05
TC-101	2.040E+04	2.040E+04	2.040E+04	2.040E+04	2.040E+04	2.040E+04	2.040E+04
RU-103	1.090E+08	1.090E+08	1.090E+08	1.090E+08	1.090E+08	1.090E+08	1.090E+08
RU-105	6.360E+05	6.360E+05	6.360E+05	6.360E+05	6.360E+05	6.360E+05	6.360E+05
RU-106	4.210E+08	4.210E+08	4.210E+08	4.210E+08	4.210E+08	4.210E+08	4.210E+08
RH-103M	0.000E+00	0.000E+00	0.000E+00	0.000E+00	0.000E+00	0.000E+00	0.000E+00
RH-106	0.000E+00	0.000E+00	0.000E+00	0.000E+00	0.000E+00	0.000E+00	0.000E+00
AG-110M	3.470E+09	3.470E+09	3.470E+09	3.470E+09	3.470E+09	3.470E+09	3.470E+09
SB-122	1.070E+07	1.070E+07	1.070E+07	1.070E+07	1.070E+07	1.070E+07	1.070E+07
TE-125M	1.550E+06	1.550E+06	1.550E+06	1.550E+06	1.550E+06	1.550E+06	1.550E+06
TE-127M	9.170E+04	9.170E+04	9.170E+04	9.170E+04	9.170E+04	9.170E+04	9.170E+04
TE-127	3.000E+03	3.000E+03	3.000E+03	3.000E+03	3.000E+03	3.000E+03	3.000E+03
TE-129M	2.000E+07	2.000E+07	2.000E+07	2.000E+07	2.000E+07	2.000E+07	2.000E+07
TE-129	2.600E+04	2.600E+04	2.600E+04	2.600E+04	2.600E+04	2.600E+04	2.600E+04
TE-131M	8.030E+06	8.030E+06	8.030E+06	8.030E+06	8.030E+06	8.030E+06	8.030E+06
TE-131	2.930E+04	2.930E+04	2.930E+04	2.930E+04	2.930E+04	2.930E+04	2.930E+04
TE-132	4.220E+06	4.220E+06	4.220E+06	4.220E+06	4.220E+06	4.220E+06	4.220E+06
I-130	5.530E+06	5.530E+06	5.530E+06	5.530E+06	5.530E+06	5.530E+06	5.530E+06
I-131	1.720E+07	1.720E+07	1.720E+07	1.720E+07	1.720E+07	1.720E+07	1.720E+07
I-132	1.240E+06	1.240E+06	1.240E+06	1.240E+06	1.240E+06	1.240E+06	1.240E+06
I-133	2.470E+06	2.470E+06	2.470E+06	2.470E+06	2.470E+06	2.470E+06	2.470E+06
I-134	4.490E+05	4.490E+05	4.490E+05	4.490E+05	4.490E+05	4.490E+05	4.490E+05
I-135	2.560E+06	2.560E+06	2.560E+06	2.560E+06	2.560E+06	2.560E+06	2.560E+06
CS-134	6.750E+09	6.750E+09	6.750E+09	6.750E+09	6.750E+09	6.750E+09	6.750E+09
CS-136	1.490E+08	1.490E+08	1.490E+08	1.490E+08	1.490E+08	1.490E+08	1.490E+08
CS-137	1.040E+10	1.040E+10	1.040E+10	1.040E+10	1.040E+10	1.040E+10	1.040E+10
CS-138	3.590E+05	3.590E+05	3.590E+05	3.590E+05	3.590E+05	3.590E+05	3.590E+05
BA-139	1.060E+05	1.060E+05	1.060E+05	1.060E+05	1.060E+05	1.060E+05	1.060E+05
BA-140	2.050E+07	2.050E+07	2.050E+07	2.050E+07	2.050E+07	2.050E+07	2.050E+07
BA-141	4.180E+04	4.180E+04	4.180E+04	4.180E+04	4.180E+04	4.180E+04	4.180E+04
BA-142	4.490E+04	4.490E+04	4.490E+04	4.490E+04	4.490E+04	4.490E+04	4.490E+04

Attachment 12
Gaseous Effluent Pathway Dose Factors

GROUND PLANE DOSE FACTORS
TEEN
(m2*mrem/yr per uCi/sec)

Nuclide	Bone	Liver	Tbody	Thyroid	Kidney	Lung	Gitract
LA-140	1.910E+07	1.910E+07	1.910E+07	1.910E+07	1.910E+07	1.910E+07	1.910E+07
LA-142	7.360E+05	7.360E+05	7.360E+05	7.360E+05	7.360E+05	7.360E+05	7.360E+05
CE-141	1.360E+07	1.360E+07	1.360E+07	1.360E+07	1.360E+07	1.360E+07	1.360E+07
CE-143	2.320E+06	2.320E+06	2.320E+06	2.320E+06	2.320E+06	2.320E+06	2.320E+06
CE-144	6.950E+07	6.950E+07	6.950E+07	6.950E+07	6.950E+07	6.950E+07	6.950E+07
PR-143	0.000E+00	0.000E+00	0.000E+00	0.000E+00	0.000E+00	0.000E+00	0.000E+00
PR-144	1.830E+03	1.830E+03	1.830E+03	1.830E+03	1.830E+03	1.830E+03	1.830E+03
ND-147	8.400E+06	8.400E+06	8.400E+06	8.400E+06	8.400E+06	8.400E+06	8.400E+06
EU-154	2.700E+10	2.700E+10	2.700E+10	2.700E+10	2.700E+10	2.700E+10	2.700E+10
EU-155	9.570E+08	9.570E+08	9.570E+08	9.570E+08	9.570E+08	9.570E+08	9.570E+08
W-187	2.360E+06	2.360E+06	2.360E+06	2.360E+06	2.360E+06	2.360E+06	2.360E+06
NP-239	1.710E+06	1.710E+06	1.710E+06	1.710E+06	1.710E+06	1.710E+06	1.710E+06

Attachment 12
Gaseous Effluent Pathway Dose Factors

GROUND PLANE DOSE FACTORS
CHILD
(m2*mrem/yr per uCi/sec)

Nuclide	Bone	Liver	Tbody	Thyroid	Kidney	Lung	Gitract
H-3	0.000E+00	0.000E+00	0.000E+00	0.000E+00	0.000E+00	0.000E+00	0.000E+00
C-14	0.000E+00	0.000E+00	0.000E+00	0.000E+00	0.000E+00	0.000E+00	0.000E+00
NA-24	1.210E+07	1.210E+07	1.210E+07	1.210E+07	1.210E+07	1.210E+07	1.210E+07
P-32	0.000E+00	0.000E+00	0.000E+00	0.000E+00	0.000E+00	0.000E+00	0.000E+00
CR-51	4.680E+06	4.680E+06	4.680E+06	4.680E+06	4.680E+06	4.680E+06	4.680E+06
MN-54	1.340E+09	1.340E+09	1.340E+09	1.340E+09	1.340E+09	1.340E+09	1.340E+09
MN-56	9.050E+05	9.050E+05	9.050E+05	9.050E+05	9.050E+05	9.050E+05	9.050E+05
FE-55	0.000E+00	0.000E+00	0.000E+00	0.000E+00	0.000E+00	0.000E+00	0.000E+00
FE-59	2.750E+08	2.750E+08	2.750E+08	2.750E+08	2.750E+08	2.750E+08	2.750E+08
CO-58	3.820E+08	3.820E+08	3.820E+08	3.820E+08	3.820E+08	3.820E+08	3.820E+08
CO-60	2.160E+10	2.160E+10	2.160E+10	2.160E+10	2.160E+10	2.160E+10	2.160E+10
NI-63	0.000E+00	0.000E+00	0.000E+00	0.000E+00	0.000E+00	0.000E+00	0.000E+00
NI-65	2.970E+05	2.970E+05	2.970E+05	2.970E+05	2.970E+05	2.970E+05	2.970E+05
CU-64	6.090E+05	6.090E+05	6.090E+05	6.090E+05	6.090E+05	6.090E+05	6.090E+05
ZN-65	7.450E+08	7.450E+08	7.450E+08	7.450E+08	7.450E+08	7.450E+08	7.450E+08
ZN-69	0.000E+00	0.000E+00	0.000E+00	0.000E+00	0.000E+00	0.000E+00	0.000E+00
BR-83	4.890E+03	4.890E+03	4.890E+03	4.890E+03	4.890E+03	4.890E+03	4.890E+03
BR-84	2.030E+05	2.030E+05	2.030E+05	2.030E+05	2.030E+05	2.030E+05	2.030E+05
BR-85	0.000E+00	0.000E+00	0.000E+00	0.000E+00	0.000E+00	0.000E+00	0.000E+00
RB-86	8.980E+06	8.980E+06	8.980E+06	8.980E+06	8.980E+06	8.980E+06	8.980E+06
RB-88	3.290E+04	3.290E+04	3.290E+04	3.290E+04	3.290E+04	3.290E+04	3.290E+04
RB-89	1.210E+05	1.210E+05	1.210E+05	1.210E+05	1.210E+05	1.210E+05	1.210E+05
SR-89	2.160E+04	2.160E+04	2.160E+04	2.160E+04	2.160E+04	2.160E+04	2.160E+04
SR-90	0.000E+00	0.000E+00	0.000E+00	0.000E+00	0.000E+00	0.000E+00	0.000E+00
SR-91	2.190E+06	2.190E+06	2.190E+06	2.190E+06	2.190E+06	2.190E+06	2.190E+06
SR-92	7.770E+05	7.770E+05	7.770E+05	7.770E+05	7.770E+05	7.770E+05	7.770E+05
Y-90	4.480E+03	4.480E+03	4.480E+03	4.480E+03	4.480E+03	4.480E+03	4.480E+03
Y-91M	1.010E+05	1.010E+05	1.010E+05	1.010E+05	1.010E+05	1.010E+05	1.010E+05
Y-91	1.080E+06	1.080E+06	1.080E+06	1.080E+06	1.080E+06	1.080E+06	1.080E+06
Y-92	1.800E+05	1.800E+05	1.800E+05	1.800E+05	1.800E+05	1.800E+05	1.800E+05
Y-93	1.850E+05	1.850E+05	1.850E+05	1.850E+05	1.850E+05	1.850E+05	1.850E+05
ZR-95	2.480E+08	2.480E+08	2.480E+08	2.480E+08	2.480E+08	2.480E+08	2.480E+08
ZR-97	2.940E+06	2.940E+06	2.940E+06	2.940E+06	2.940E+06	2.940E+06	2.940E+06
NB-95	1.360E+08	1.360E+08	1.360E+08	1.360E+08	1.360E+08	1.360E+08	1.360E+08

Attachment 12
Gaseous Effluent Pathway Dose Factors

GROUND PLANE DOSE FACTORS
CHILD
(m2*mrem/yr per uCi/sec)

Nuclide	Bone	Liver	Tbody	Thyroid	Kidney	Lung	Gltract
MO-99	4.050E+06	4.050E+06	4.050E+06	4.050E+06	4.050E+06	4.050E+06	4.050E+06
TC-99M	1.830E+05	1.830E+05	1.830E+05	1.830E+05	1.830E+05	1.830E+05	1.830E+05
TC-101	2.040E+04	2.040E+04	2.040E+04	2.040E+04	2.040E+04	2.040E+04	2.040E+04
RU-103	1.090E+08	1.090E+08	1.090E+08	1.090E+08	1.090E+08	1.090E+08	1.090E+08
RU-105	6.360E+05	6.360E+05	6.360E+05	6.360E+05	6.360E+05	6.360E+05	6.360E+05
RU-106	4.210E+08	4.210E+08	4.210E+08	4.210E+08	4.210E+08	4.210E+08	4.210E+08
RH-103M	0.000E+00	0.000E+00	0.000E+00	0.000E+00	0.000E+00	0.000E+00	0.000E+00
RH-106	0.000E+00	0.000E+00	0.000E+00	0.000E+00	0.000E+00	0.000E+00	0.000E+00
AG-110M	3.470E+09	3.470E+09	3.470E+09	3.470E+09	3.470E+09	3.470E+09	3.470E+09
SB-122	1.070E+07	1.070E+07	1.070E+07	1.070E+07	1.070E+07	1.070E+07	1.070E+07
TE-125M	1.550E+06	1.550E+06	1.550E+06	1.550E+06	1.550E+06	1.550E+06	1.550E+06
TE-127M	9.170E+04	9.170E+04	9.170E+04	9.170E+04	9.170E+04	9.170E+04	9.170E+04
TE-127	3.000E+03	3.000E+03	3.000E+03	3.000E+03	3.000E+03	3.000E+03	3.000E+03
TE-129M	2.000E+07	2.000E+07	2.000E+07	2.000E+07	2.000E+07	2.000E+07	2.000E+07
TE-129	2.600E+04	2.600E+04	2.600E+04	2.600E+04	2.600E+04	2.600E+04	2.600E+04
TE-131M	8.030E+06	8.030E+06	8.030E+06	8.030E+06	8.030E+06	8.030E+06	8.030E+06
TE-131	2.930E+04	2.930E+04	2.930E+04	2.930E+04	2.930E+04	2.930E+04	2.930E+04
TE-132	4.220E+06	4.220E+06	4.220E+06	4.220E+06	4.220E+06	4.220E+06	4.220E+06
I-130	5.530E+06	5.530E+06	5.530E+06	5.530E+06	5.530E+06	5.530E+06	5.530E+06
I-131	1.720E+07	1.720E+07	1.720E+07	1.720E+07	1.720E+07	1.720E+07	1.720E+07
I-132	1.240E+06	1.240E+06	1.240E+06	1.240E+06	1.240E+06	1.240E+06	1.240E+06
I-133	2.470E+06	2.470E+06	2.470E+06	2.470E+06	2.470E+06	2.470E+06	2.470E+06
I-134	4.490E+05	4.490E+05	4.490E+05	4.490E+05	4.490E+05	4.490E+05	4.490E+05
I-135	2.560E+06	2.560E+06	2.560E+06	2.560E+06	2.560E+06	2.560E+06	2.560E+06
CS-134	6.750E+09	6.750E+09	6.750E+09	6.750E+09	6.750E+09	6.750E+09	6.750E+09
CS-136	1.490E+08	1.490E+08	1.490E+08	1.490E+08	1.490E+08	1.490E+08	1.490E+08
CS-137	1.040E+10	1.040E+10	1.040E+10	1.040E+10	1.040E+10	1.040E+10	1.040E+10
CS-138	3.590E+05	3.590E+05	3.590E+05	3.590E+05	3.590E+05	3.590E+05	3.590E+05
BA-139	1.060E+05	1.060E+05	1.060E+05	1.060E+05	1.060E+05	1.060E+05	1.060E+05
BA-140	2.050E+07	2.050E+07	2.050E+07	2.050E+07	2.050E+07	2.050E+07	2.050E+07
BA-141	4.180E+04	4.180E+04	4.180E+04	4.180E+04	4.180E+04	4.180E+04	4.180E+04
BA-142	4.490E+04	4.490E+04	4.490E+04	4.490E+04	4.490E+04	4.490E+04	4.490E+04
LA-140	1.910E+07	1.910E+07	1.910E+07	1.910E+07	1.910E+07	1.910E+07	1.910E+07
LA-142	7.360E+05	7.360E+05	7.360E+05	7.360E+05	7.360E+05	7.360E+05	7.360E+05

Attachment 12
Gaseous Effluent Pathway Dose Factors

GROUND PLANE DOSE FACTORS
CHILD
(m2*mrem/yr per uCi/sec)

Nuclide	Bone	Liver	Tbody	Thyroid	Kidney	Lung	Gitract
CE-141	1.360E+07	1.360E+07	1.360E+07	1.360E+07	1.360E+07	1.360E+07	1.360E+07
CE-143	2.320E+06	2.320E+06	2.320E+06	2.320E+06	2.320E+06	2.320E+06	2.320E+06
CE-144	6.950E+07	6.950E+07	6.950E+07	6.950E+07	6.950E+07	6.950E+07	6.950E+07
PR-143	0.000E+00	0.000E+00	0.000E+00	0.000E+00	0.000E+00	0.000E+00	0.000E+00
PR-144	1.830E+03	1.830E+03	1.830E+03	1.830E+03	1.830E+03	1.830E+03	1.830E+03
ND-147	8.400E+06	8.400E+06	8.400E+06	8.400E+06	8.400E+06	8.400E+06	8.400E+06
EU-154	2.700E+10	2.700E+10	2.700E+10	2.700E+10	2.700E+10	2.700E+10	2.700E+10
EU-155	9.570E+08	9.570E+08	9.570E+08	9.570E+08	9.570E+08	9.570E+08	9.570E+08
W-187	2.360E+06	2.360E+06	2.360E+06	2.360E+06	2.360E+06	2.360E+06	2.360E+06
NP-239	1.710E+06	1.710E+06	1.710E+06	1.710E+06	1.710E+06	1.710E+06	1.710E+06

Attachment 12
Gaseous Effluent Pathway Dose Factors

GROUND PLANE DOSE FACTORS
INFANT
(m2*mrem/yr per uCi/sec)

Nuclide	Bone	Liver	Tbody	Thyroid	Kidney	Lung	Gitract
H-3	0.000E+00	0.000E+00	0.000E+00	0.000E+00	0.000E+00	0.000E+00	0.000E+00
C-14	0.000E+00	0.000E+00	0.000E+00	0.000E+00	0.000E+00	0.000E+00	0.000E+00
NA-24	1.210E+07	1.210E+07	1.210E+07	1.210E+07	1.210E+07	1.210E+07	1.210E+07
P-32	0.000E+00	0.000E+00	0.000E+00	0.000E+00	0.000E+00	0.000E+00	0.000E+00
CR-51	4.680E+06	4.680E+06	4.680E+06	4.680E+06	4.680E+06	4.680E+06	4.680E+06
MN-54	1.340E+09	1.340E+09	1.340E+09	1.340E+09	1.340E+09	1.340E+09	1.340E+09
MN-56	9.050E+05	9.050E+05	9.050E+05	9.050E+05	9.050E+05	9.050E+05	9.050E+05
FE-55	0.000E+00	0.000E+00	0.000E+00	0.000E+00	0.000E+00	0.000E+00	0.000E+00
FE-59	2.750E+08	2.750E+08	2.750E+08	2.750E+08	2.750E+08	2.750E+08	2.750E+08
CO-58	3.820E+08	3.820E+08	3.820E+08	3.820E+08	3.820E+08	3.820E+08	3.820E+08
CO-60	2.160E+10	2.160E+10	2.160E+10	2.160E+10	2.160E+10	2.160E+10	2.160E+10
NI-63	0.000E+00	0.000E+00	0.000E+00	0.000E+00	0.000E+00	0.000E+00	0.000E+00
NI-65	2.970E+05	2.970E+05	2.970E+05	2.970E+05	2.970E+05	2.970E+05	2.970E+05
CU-64	6.090E+05	6.090E+05	6.090E+05	6.090E+05	6.090E+05	6.090E+05	6.090E+05
ZN-65	7.450E+08	7.450E+08	7.450E+08	7.450E+08	7.450E+08	7.450E+08	7.450E+08
ZN-69	0.000E+00	0.000E+00	0.000E+00	0.000E+00	0.000E+00	0.000E+00	0.000E+00
BR-83	4.890E+03	4.890E+03	4.890E+03	4.890E+03	4.890E+03	4.890E+03	4.890E+03
BR-84	2.030E+05	2.030E+05	2.030E+05	2.030E+05	2.030E+05	2.030E+05	2.030E+05
BR-85	0.000E+00	0.000E+00	0.000E+00	0.000E+00	0.000E+00	0.000E+00	0.000E+00
RB-86	8.980E+06	8.980E+06	8.980E+06	8.980E+06	8.980E+06	8.980E+06	8.980E+06
RB-88	3.290E+04	3.290E+04	3.290E+04	3.290E+04	3.290E+04	3.290E+04	3.290E+04
RB-89	1.210E+05	1.210E+05	1.210E+05	1.210E+05	1.210E+05	1.210E+05	1.210E+05
SR-89	2.160E+04	2.160E+04	2.160E+04	2.160E+04	2.160E+04	2.160E+04	2.160E+04
SR-90	0.000E+00	0.000E+00	0.000E+00	0.000E+00	0.000E+00	0.000E+00	0.000E+00
SR-91	2.190E+06	2.190E+06	2.190E+06	2.190E+06	2.190E+06	2.190E+06	2.190E+06
SR-92	7.770E+05	7.770E+05	7.770E+05	7.770E+05	7.770E+05	7.770E+05	7.770E+05
Y-90	4.480E+03	4.480E+03	4.480E+03	4.480E+03	4.480E+03	4.480E+03	4.480E+03
Y-91M	1.010E+05	1.010E+05	1.010E+05	1.010E+05	1.010E+05	1.010E+05	1.010E+05
Y-91	1.080E+06	1.080E+06	1.080E+06	1.080E+06	1.080E+06	1.080E+06	1.080E+06
Y-92	1.800E+05	1.800E+05	1.800E+05	1.800E+05	1.800E+05	1.800E+05	1.800E+05
Y-93	1.850E+05	1.850E+05	1.850E+05	1.850E+05	1.850E+05	1.850E+05	1.850E+05
ZR-95	2.480E+08	2.480E+08	2.480E+08	2.480E+08	2.480E+08	2.480E+08	2.480E+08
ZR-97	2.940E+06	2.940E+06	2.940E+06	2.940E+06	2.940E+06	2.940E+06	2.940E+06

Attachment 12
Gaseous Effluent Pathway Dose Factors

GROUND PLANE DOSE FACTORS
INFANT
(m2*mrem/yr per uCi/sec)

Nuclide	Bone	Liver	Tbody	Thyroid	Kidney	Lung	Gltract
NB-95	1.360E+08	1.360E+08	1.360E+08	1.360E+08	1.360E+08	1.360E+08	1.360E+08
MO-99	4.050E+06	4.050E+06	4.050E+06	4.050E+06	4.050E+06	4.050E+06	4.050E+06
TC-99M	1.830E+05	1.830E+05	1.830E+05	1.830E+05	1.830E+05	1.830E+05	1.830E+05
TC-101	2.040E+04	2.040E+04	2.040E+04	2.040E+04	2.040E+04	2.040E+04	2.040E+04
RU-103	1.090E+08	1.090E+08	1.090E+08	1.090E+08	1.090E+08	1.090E+08	1.090E+08
RU-105	6.360E+05	6.360E+05	6.360E+05	6.360E+05	6.360E+05	6.360E+05	6.360E+05
RU-106	4.210E+08	4.210E+08	4.210E+08	4.210E+08	4.210E+08	4.210E+08	4.210E+08
RH-103M	0.000E+00	0.000E+00	0.000E+00	0.000E+00	0.000E+00	0.000E+00	0.000E+00
RH-106	0.000E+00	0.000E+00	0.000E+00	0.000E+00	0.000E+00	0.000E+00	0.000E+00
AG-110M	3.470E+09	3.470E+09	3.470E+09	3.470E+09	3.470E+09	3.470E+09	3.470E+09
SB-122	1.070E+07	1.070E+07	1.070E+07	1.070E+07	1.070E+07	1.070E+07	1.070E+07
TE-125M	1.550E+06	1.550E+06	1.550E+06	1.550E+06	1.550E+06	1.550E+06	1.550E+06
TE-127M	9.170E+04	9.170E+04	9.170E+04	9.170E+04	9.170E+04	9.170E+04	9.170E+04
TE-127	3.000E+03	3.000E+03	3.000E+03	3.000E+03	3.000E+03	3.000E+03	3.000E+03
TE-129M	2.000E+07	2.000E+07	2.000E+07	2.000E+07	2.000E+07	2.000E+07	2.000E+07
TE-129	2.600E+04	2.600E+04	2.600E+04	2.600E+04	2.600E+04	2.600E+04	2.600E+04
TE-131M	8.030E+06	8.030E+06	8.030E+06	8.030E+06	8.030E+06	8.030E+06	8.030E+06
TE-131	2.930E+04	2.930E+04	2.930E+04	2.930E+04	2.930E+04	2.930E+04	2.930E+04
TE-132	4.220E+06	4.220E+06	4.220E+06	4.220E+06	4.220E+06	4.220E+06	4.220E+06
I-130	5.530E+06	5.530E+06	5.530E+06	5.530E+06	5.530E+06	5.530E+06	5.530E+06
I-131	1.720E+07	1.720E+07	1.720E+07	1.720E+07	1.720E+07	1.720E+07	1.720E+07
I-132	1.240E+06	1.240E+06	1.240E+06	1.240E+06	1.240E+06	1.240E+06	1.240E+06
I-133	2.470E+06	2.470E+06	2.470E+06	2.470E+06	2.470E+06	2.470E+06	2.470E+06
I-134	4.490E+05	4.490E+05	4.490E+05	4.490E+05	4.490E+05	4.490E+05	4.490E+05
I-135	2.560E+06	2.560E+06	2.560E+06	2.560E+06	2.560E+06	2.560E+06	2.560E+06
CS-134	6.750E+09	6.750E+09	6.750E+09	6.750E+09	6.750E+09	6.750E+09	6.750E+09
CS-136	1.490E+08	1.490E+08	1.490E+08	1.490E+08	1.490E+08	1.490E+08	1.490E+08
CS-137	1.040E+10	1.040E+10	1.040E+10	1.040E+10	1.040E+10	1.040E+10	1.040E+10
CS-138	3.590E+05	3.590E+05	3.590E+05	3.590E+05	3.590E+05	3.590E+05	3.590E+05
BA-139	1.060E+05	1.060E+05	1.060E+05	1.060E+05	1.060E+05	1.060E+05	1.060E+05
BA-140	2.050E+07	2.050E+07	2.050E+07	2.050E+07	2.050E+07	2.050E+07	2.050E+07
BA-141	4.180E+04	4.180E+04	4.180E+04	4.180E+04	4.180E+04	4.180E+04	4.180E+04
BA-142	4.490E+04	4.490E+04	4.490E+04	4.490E+04	4.490E+04	4.490E+04	4.490E+04

Attachment 12
Gaseous Effluent Pathway Dose Factors

GROUND PLANE DOSE FACTORS
INFANT
(m2*mrem/yr per uCi/sec)

Nuclide	Bone	Liver	Tbody	Thyroid	Kidney	Lung	Gltract
LA-140	1.910E+07	1.910E+07	1.910E+07	1.910E+07	1.910E+07	1.910E+07	1.910E+07
LA-142	7.360E+05	7.360E+05	7.360E+05	7.360E+05	7.360E+05	7.360E+05	7.360E+05
CE-141	1.360E+07	1.360E+07	1.360E+07	1.360E+07	1.360E+07	1.360E+07	1.360E+07
CE-143	2.320E+06	2.320E+06	2.320E+06	2.320E+06	2.320E+06	2.320E+06	2.320E+06
CE-144	6.950E+07	6.950E+07	6.950E+07	6.950E+07	6.950E+07	6.950E+07	6.950E+07
PR-143	0.000E+00	0.000E+00	0.000E+00	0.000E+00	0.000E+00	0.000E+00	0.000E+00
PR-144	1.830E+03	1.830E+03	1.830E+03	1.830E+03	1.830E+03	1.830E+03	1.830E+03
ND-147	8.400E+06	8.400E+06	8.400E+06	8.400E+06	8.400E+06	8.400E+06	8.400E+06
EU-154	2.700E+10	2.700E+10	2.700E+10	2.700E+10	2.700E+10	2.700E+10	2.700E+10
EU-155	9.570E+08	9.570E+08	9.570E+08	9.570E+08	9.570E+08	9.570E+08	9.570E+08
W-187	2.360E+06	2.360E+06	2.360E+06	2.360E+06	2.360E+06	2.360E+06	2.360E+06
NP-239	1.710E+06	1.710E+06	1.710E+06	1.710E+06	1.710E+06	1.710E+06	1.710E+06

Attachment 12
Gaseous Effluent Pathway Dose Factors

INHALATION DOSE FACTORS
ADULT
(mrem/yr per uCi/m^3)

Nuclide	Bone	Liver	Tbody	Thyroid	Kidney	Lung	Gitract
H-3	0.000E+00	1.260E+03	1.260E+03	1.260E+03	1.260E+03	1.260E+03	1.260E+03
C-14	1.820E+04	3.410E+03	3.410E+03	3.410E+03	3.410E+03	3.410E+03	3.410E+03
NA-24	1.020E+04	1.020E+04	1.020E+04	1.020E+04	1.020E+04	1.020E+04	1.020E+04
P-32	1.320E+06	7.710E+04	5.010E+04	0.000E+00	0.000E+00	0.000E+00	8.640E+04
CR-51	0.000E+00	0.000E+00	1.000E+02	5.950E+01	2.280E+01	1.440E+04	3.320E+03
MN-54	0.000E+00	3.960E+04	6.300E+03	0.000E+00	9.840E+03	1.400E+06	7.740E+04
MN-56	0.000E+00	1.240E+00	1.830E-01	0.000E+00	1.300E+00	9.440E+03	2.020E+04
FE-55	2.460E+04	1.700E+04	3.940E+03	0.000E+00	0.000E+00	7.210E+04	6.030E+03
FE-59	1.180E+04	2.780E+04	1.060E+04	0.000E+00	0.000E+00	1.020E+06	1.880E+05
CO-57	0.000E+00	6.920E+02	6.710E+02	0.000E+00	0.000E+00	3.700E+05	3.140E+04
CO-58	0.000E+00	1.580E+03	2.070E+03	0.000E+00	0.000E+00	9.280E+05	1.060E+05
CO-60	0.000E+00	1.150E+04	1.480E+04	0.000E+00	0.000E+00	5.970E+06	2.850E+05
NI-63	4.320E+05	3.140E+04	1.450E+04	0.000E+00	0.000E+00	1.780E+05	1.340E+04
NI-65	1.540E+00	2.100E-01	9.120E-02	0.000E+00	0.000E+00	5.600E+03	1.230E+04
CU-64	0.000E+00	1.460E+00	6.150E-01	0.000E+00	4.620E+00	6.780E+03	4.900E+04
ZN-65	3.240E+04	1.030E+05	4.660E+04	0.000E+00	6.900E+04	8.640E+05	5.340E+04
ZN-69	3.380E-02	6.510E-02	4.520E-03	0.000E+00	4.220E-02	9.200E+02	1.630E+01
BR-82	0.000E+00	0.000E+00	1.350E+04	0.000E+00	0.000E+00	0.000E+00	1.040E+04
BR-83	0.000E+00	0.000E+00	2.410E+02	0.000E+00	0.000E+00	0.000E+00	2.320E+02
BR-84	0.000E+00	0.000E+00	3.130E+02	0.000E+00	0.000E+00	0.000E+00	1.640E-03
BR-85	0.000E+00	0.000E+00	1.280E+01	0.000E+00	0.000E+00	0.000E+00	0.000E+00
RB-86	0.000E+00	1.350E+05	5.900E+04	0.000E+00	0.000E+00	0.000E+00	1.660E+04
RB-88	0.000E+00	3.870E+02	1.930E+02	0.000E+00	0.000E+00	0.000E+00	3.340E-09
RB-89	0.000E+00	2.560E+02	1.700E+02	0.000E+00	0.000E+00	0.000E+00	0.000E+00
SR-89	3.040E+05	0.000E+00	8.720E+03	0.000E+00	0.000E+00	1.400E+06	3.500E+05
SR-90	9.920E+07	0.000E+00	6.100E+06	0.000E+00	0.000E+00	9.600E+06	7.220E+05
SR-91	6.190E+01	0.000E+00	2.500E+00	0.000E+00	0.000E+00	3.650E+04	1.910E+05
SR-92	6.740E+00	0.000E+00	2.910E-01	0.000E+00	0.000E+00	1.650E+04	4.300E+04
Y-90	2.090E+03	0.000E+00	5.610E+01	0.000E+00	0.000E+00	1.700E+05	5.060E+05
Y-91M	2.610E-01	0.000E+00	1.020E-02	0.000E+00	0.000E+00	1.920E+03	1.330E+00
Y-91	4.620E+05	0.000E+00	1.240E+04	0.000E+00	0.000E+00	1.700E+06	3.850E+05
Y-92	1.030E+01	0.000E+00	3.020E-01	0.000E+00	0.000E+00	1.570E+04	7.350E+04
Y-93	9.440E+01	0.000E+00	2.610E+00	0.000E+00	0.000E+00	4.850E+04	4.220E+05

Attachment 12
Gaseous Effluent Pathway Dose Factors

INHALATION DOSE FACTORS
ADULT
(mrem/yr per uCi/m^3)

Nuclide	Bone	Liver	Tbody	Thyroid	Kidney	Lung	Gltract
ZR-95	1.070E+05	3.440E+04	2.330E+04	0.000E+00	5.420E+04	1.770E+06	1.500E+05
ZR-97	9.680E+01	1.960E+01	9.040E+00	0.000E+00	2.970E+01	7.870E+04	5.230E+05
NB-95	1.410E+04	7.820E+03	4.210E+03	0.000E+00	7.740E+03	5.050E+05	1.040E+05
NB-97	2.220E-01	5.620E-02	2.050E-02	0.000E+00	6.540E-02	2.400E+03	2.420E+02
MO-99	0.000E+00	1.210E+02	2.300E+01	0.000E+00	2.910E+02	9.120E+04	2.480E+05
TC-99M	1.030E-03	2.910E-03	3.700E-02	0.000E+00	4.420E-02	7.640E+02	4.160E+03
TC-101	4.180E-05	6.020E-05	5.900E-04	0.000E+00	1.080E-03	3.990E+02	0.000E+00
RU-103	1.530E+03	0.000E+00	6.580E+02	0.000E+00	5.830E+03	5.050E+05	1.100E+05
RU-105	7.900E-01	0.000E+00	3.110E-01	0.000E+00	1.020E+00	1.100E+04	4.820E+04
RU-106	6.910E+04	0.000E+00	8.720E+03	0.000E+00	1.340E+05	9.360E+06	9.120E+05
RH-103M	0.000E+00	0.000E+00	0.000E+00	0.000E+00	0.000E+00	0.000E+00	0.000E+00
RH-106	0.000E+00	0.000E+00	0.000E+00	0.000E+00	0.000E+00	0.000E+00	0.000E+00
AG-110M	1.080E+04	1.000E+04	5.940E+03	0.000E+00	1.970E+04	4.630E+06	3.020E+05
SB-122	3.100E+03	4.110E+03	4.110E+04	1.070E+03	1.550E+03	1.670E+05	2.020E+05
SB-124	3.120E+04	5.890E+02	1.240E+04	7.550E+01	0.000E+00	2.480E+06	4.060E+05
SB-125	5.340E+04	5.950E+02	1.260E+04	5.400E+01	0.000E+00	1.740E+06	1.010E+05
TE-125M	3.420E+03	1.580E+03	4.670E+02	1.050E+03	1.240E+04	3.140E+05	7.060E+04
TE-127M	1.260E+04	5.770E+03	1.570E+03	3.290E+03	4.580E+04	9.600E+05	1.500E+05
TE-127	1.400E+00	6.420E-01	3.100E-01	1.060E+00	5.100E+00	6.510E+03	5.740E+04
TE-129M	9.760E+03	4.670E+03	1.580E+03	3.440E+03	3.660E+04	1.160E+06	3.830E+05
TE-129	4.980E-02	2.390E-02	1.240E-02	3.900E-02	1.870E-01	1.940E+03	1.570E+02
TE-131M	6.990E+01	4.360E+01	2.900E+01	5.500E+01	3.090E+02	1.460E+05	5.560E+05
TE-131	1.110E-02	5.950E-03	3.590E-03	9.360E-03	4.370E-02	1.390E+03	1.840E+01
TE-132	2.600E+02	2.150E+02	1.620E+02	1.900E+02	1.460E+03	2.880E+05	5.100E+05
I-130	4.580E+03	1.340E+04	5.280E+03	1.140E+06	2.090E+04	7.690E+03	0.000E+00
I-131	2.520E+04	3.580E+04	2.050E+04	1.190E+07	6.130E+04	0.000E+00	6.280E+03
I-132	1.160E+03	3.260E+03	1.160E+03	1.140E+05	5.180E+03	0.000E+00	4.060E+02
I-133	8.640E+03	1.480E+04	4.520E+03	2.150E+06	2.580E+04	0.000E+00	8.880E+03
I-134	6.440E+02	1.730E+03	6.150E+02	2.980E+04	2.750E+03	0.000E+00	1.010E+00
I-135	2.680E+03	6.980E+03	2.570E+03	4.480E+05	1.110E+04	0.000E+00	5.250E+03
CS-134	3.730E+05	8.480E+05	7.280E+05	0.000E+00	2.870E+05	9.760E+04	1.040E+04
CS-136	3.900E+04	1.460E+05	1.100E+05	0.000E+00	8.560E+04	1.200E+04	1.170E+04
CS-137	4.780E+05	6.210E+05	4.280E+05	0.000E+00	2.220E+05	7.520E+04	8.400E+03
CS-138	3.310E+02	6.210E+02	3.240E+02	0.000E+00	4.800E+02	4.860E+01	1.860E-03

Attachment 12
Gaseous Effluent Pathway Dose Factors

INHALATION DOSE FACTORS
ADULT
(mrem/yr per uCi/m^3)

Nuclide	Bone	Liver	Tbody	Thyroid	Kidney	Lung	Gitract
BA-139	9.360E-01	6.660E-04	2.740E-02	0.000E+00	6.220E-04	3.760E+03	8.960E+02
BA-140	3.900E+04	4.900E+01	2.570E+03	0.000E+00	1.670E+01	1.270E+06	2.180E+05
BA-141	1.000E-01	7.530E-05	3.360E-03	0.000E+00	7.000E-05	1.940E+03	1.160E-07
BA-142	2.630E-02	2.700E-05	1.660E-03	0.000E+00	2.290E-05	1.190E+03	0.000E+00
LA-140	3.440E+02	1.740E+02	4.580E+01	0.000E+00	0.000E+00	1.360E+05	4.580E+05
LA-142	6.830E-01	3.100E-01	7.720E-02	0.000E+00	0.000E+00	6.330E+03	2.110E+03
CE-141	1.990E+04	1.350E+04	1.530E+03	0.000E+00	6.260E+03	3.620E+05	1.200E+05
CE-143	1.860E+02	1.380E+02	1.530E+01	0.000E+00	6.080E+01	7.980E+04	2.260E+05
CE-144	3.430E+06	1.430E+06	1.840E+05	0.000E+00	8.480E+05	7.780E+06	8.160E+05
PR-143	9.360E+03	3.750E+03	4.640E+02	0.000E+00	2.160E+03	2.810E+05	2.000E+05
PR-144	3.010E-02	1.250E-02	1.530E-03	0.000E+00	7.050E-03	1.020E+03	2.150E-08
ND-147	5.270E+03	6.100E+03	3.650E+02	0.000E+00	3.560E+03	2.210E+05	1.730E+05
EU-154	5.920E+06	7.280E+05	5.180E+05	0.000E+00	3.490E+06	4.670E+06	2.720E+05
EU-155	8.080E+05	1.140E+05	7.370E+04	0.000E+00	5.270E+05	7.570E+05	4.760E+04
W-187	8.480E+00	7.080E+00	2.480E+00	0.000E+00	0.000E+00	2.900E+04	1.550E+05
NP-239	2.300E+02	2.260E+01	1.240E+01	0.000E+00	7.000E+01	3.760E+04	1.190E+05

Attachment 12
Gaseous Effluent Pathway Dose Factors

INHALATION DOSE FACTORS
TEEN
(mrem/yr per uCi/m^3)

Nuclide	Bone	Liver	Tbody	Thyroid	Kidney	Lung	Gitract
H-3	0.000E+00	1.270E+03	1.270E+03	1.270E+03	1.270E+03	1.270E+03	1.270E+03
C-14	2.600E+04	4.870E+03	4.870E+03	4.870E+03	4.870E+03	4.870E+03	4.870E+03
NA-24	1.380E+04	1.380E+04	1.380E+04	1.380E+04	1.380E+04	1.380E+04	1.380E+04
P-32	1.890E+06	1.100E+05	7.160E+04	0.000E+00	0.000E+00	0.000E+00	9.280E+04
CR-51	0.000E+00	0.000E+00	1.350E+02	7.500E+01	3.070E+01	2.100E+04	3.000E+03
MN-54	0.000E+00	5.110E+04	8.400E+03	0.000E+00	1.270E+04	1.980E+06	6.680E+04
MN-56	0.000E+00	1.700E+00	2.520E-01	0.000E+00	1.790E+00	1.520E+04	5.740E+04
FE-55	3.340E+04	2.380E+04	5.540E+03	0.000E+00	0.000E+00	1.240E+05	6.390E+03
FE-59	1.590E+04	3.700E+04	1.430E+04	0.000E+00	0.000E+00	1.530E+06	1.780E+05
CO-57	0.000E+00	6.920E+02	9.200E+02	0.000E+00	0.000E+00	5.860E+05	3.140E+04
CO-58	0.000E+00	2.070E+03	2.780E+03	0.000E+00	0.000E+00	1.340E+06	9.520E+04
CO-60	0.000E+00	1.510E+04	1.980E+04	0.000E+00	0.000E+00	8.720E+06	2.590E+05
NI-63	5.800E+05	4.340E+04	1.980E+04	0.000E+00	0.000E+00	3.070E+05	1.420E+04
NI-65	2.180E+00	2.930E-01	1.270E-01	0.000E+00	0.000E+00	9.360E+03	3.670E+04
CU-64	0.000E+00	2.030E+00	8.480E-01	0.000E+00	6.410E+00	1.110E+04	6.140E+04
ZN-65	3.860E+04	1.340E+05	6.240E+04	0.000E+00	8.640E+04	1.240E+06	4.660E+04
ZN-69	4.830E-02	9.200E-02	6.460E-03	0.000E+00	6.020E-02	1.580E+03	2.850E+02
BR-82	0.000E+00	0.000E+00	1.820E+04	0.000E+00	0.000E+00	0.000E+00	0.000E+00
BR-83	0.000E+00	0.000E+00	3.440E+02	0.000E+00	0.000E+00	0.000E+00	0.000E+00
BR-84	0.000E+00	0.000E+00	4.330E+02	0.000E+00	0.000E+00	0.000E+00	0.000E+00
BR-85	0.000E+00	0.000E+00	1.830E+01	0.000E+00	0.000E+00	0.000E+00	0.000E+00
RB-86	0.000E+00	1.900E+05	8.400E+04	0.000E+00	0.000E+00	0.000E+00	1.770E+04
RB-88	0.000E+00	5.460E+02	2.720E+02	0.000E+00	0.000E+00	0.000E+00	2.920E-05
RB-89	0.000E+00	3.520E+02	2.330E+02	0.000E+00	0.000E+00	0.000E+00	3.380E-07
SR-89	4.340E+05	0.000E+00	1.250E+04	0.000E+00	0.000E+00	2.420E+06	3.710E+05
SR-90	1.080E+08	0.000E+00	6.680E+06	0.000E+00	0.000E+00	1.650E+07	7.650E+05
SR-91	8.800E+01	0.000E+00	3.510E+00	0.000E+00	0.000E+00	6.070E+04	2.590E+05
SR-92	9.520E+00	0.000E+00	4.060E-01	0.000E+00	0.000E+00	2.740E+04	1.190E+05
Y-90	2.980E+03	0.000E+00	8.000E+01	0.000E+00	0.000E+00	2.930E+05	5.590E+05
Y-91M	3.700E-01	0.000E+00	1.420E-02	0.000E+00	0.000E+00	3.200E+03	3.020E+01
Y-91	6.610E+05	0.000E+00	1.770E+04	0.000E+00	0.000E+00	2.940E+06	4.090E+05
Y-92	1.470E+01	0.000E+00	4.290E-01	0.000E+00	0.000E+00	2.680E+04	1.650E+05
Y-93	1.350E+02	0.000E+00	3.720E+00	0.000E+00	0.000E+00	8.320E+04	5.790E+05

Attachment 12
Gaseous Effluent Pathway Dose Factors

INHALATION DOSE FACTORS
TEEN
(mrem/yr per uCi/m^3)

Nuclide	Bone	Liver	Tbody	Thyroid	Kidney	Lung	Gitract
ZR-95	1.460E+05	4.580E+04	3.150E+04	0.000E+00	6.740E+04	2.690E+05	1.490E+05
ZR-97	1.380E+02	2.720E+01	1.260E+01	0.000E+00	4.120E+01	1.300E+05	6.300E+05
NB-95	1.860E+04	1.030E+04	5.660E+03	0.000E+00	1.000E+04	7.510E+05	9.680E+04
NB-97	3.140E-01	7.780E-02	2.840E-02	0.000E+00	9.120E-02	3.930E+03	2.170E+03
MO-99	0.000E+00	1.690E+02	3.220E+01	0.000E+00	4.110E+02	1.540E+05	2.690E+05
TC-99M	1.380E-03	3.860E-03	4.990E-02	0.000E+00	5.760E-02	1.150E+03	6.130E+03
TC-101	5.920E-05	8.400E-05	8.240E-04	0.000E+00	1.520E-03	6.670E+02	8.720E-07
RU-103	2.100E+03	0.000E+00	8.960E+02	0.000E+00	7.430E+03	7.830E+05	1.090E+05
RU-105	1.120E+00	0.000E+00	4.340E-01	0.000E+00	1.410E+00	1.820E+04	9.040E+04
RU-106	9.840E+04	0.000E+00	1.240E+04	0.000E+00	1.900E+05	1.610E+07	9.600E+05
RH-103M	0.000E+00	0.000E+00	0.000E+00	0.000E+00	0.000E+00	0.000E+00	0.000E+00
RH-106	0.000E+00	0.000E+00	0.000E+00	0.000E+00	0.000E+00	0.000E+00	0.000E+00
AG-110M	1.380E+04	1.310E+04	7.990E+03	0.000E+00	2.500E+04	6.750E+06	2.730E+05
SB-122	3.100E+03	4.110E+03	4.110E+04	1.070E+03	1.550E+03	1.670E+05	2.020E+05
SB-124	4.300E+04	7.940E+02	1.680E+04	9.760E+01	0.000E+00	3.850E+06	3.980E+05
SB-125	7.380E+04	8.080E+02	1.720E+04	7.040E+01	0.000E+00	2.740E+06	9.920E+04
TE-125M	4.880E+03	2.240E+03	6.670E+02	1.400E+03	0.000E+00	5.360E+05	7.500E+04
TE-127M	1.800E+04	8.160E+03	2.180E+03	4.380E+03	6.540E+04	1.660E+06	1.590E+05
TE-127	2.010E+00	9.120E-01	4.420E-01	1.420E+00	7.280E+00	1.120E+04	8.080E+04
TE-129M	1.390E+04	6.580E+03	2.250E+03	4.580E+03	5.190E+04	1.980E+06	4.050E+05
TE-129	7.100E-02	3.380E-02	1.760E-02	5.180E-02	2.660E-01	3.300E+03	1.620E+03
TE-131M	9.840E+01	6.010E+01	4.020E+01	7.250E+01	4.390E+02	2.380E+05	6.210E+05
TE-131	1.580E-02	8.320E-03	5.040E-03	1.240E-02	6.180E-02	2.340E+03	1.510E+01
TE-132	3.600E+02	2.900E+02	2.190E+02	2.460E+02	1.950E+03	4.490E+05	4.630E+05
I-130	6.240E+03	1.790E+04	7.170E+03	1.490E+06	2.750E+04	0.000E+00	9.120E+03
I-131	3.540E+04	4.910E+04	2.640E+04	1.460E+07	8.400E+04	0.000E+00	6.490E+03
I-132	1.590E+03	4.380E+03	1.580E+03	1.510E+05	6.920E+03	0.000E+00	1.270E+03
I-133	1.220E+04	2.050E+04	6.220E+03	2.920E+06	3.590E+04	0.000E+00	1.030E+04
I-134	8.880E+02	2.320E+03	8.400E+02	3.950E+04	3.660E+03	0.000E+00	2.040E+01
I-135	3.700E+03	9.440E+03	3.490E+03	6.210E+05	1.490E+04	0.000E+00	6.950E+03
CS-134	5.020E+05	1.130E+06	5.490E+05	0.000E+00	3.750E+05	1.460E+05	9.760E+03
CS-136	5.150E+04	1.940E+05	1.370E+05	0.000E+00	1.100E+05	1.780E+04	1.090E+04
CS-137	6.700E+05	8.480E+05	3.110E+05	0.000E+00	3.040E+05	1.210E+05	8.480E+03
CS-138	4.660E+02	8.560E+02	4.460E+02	0.000E+00	6.620E+02	7.870E+01	2.700E-01

Attachment 12
Gaseous Effluent Pathway Dose Factors

INHALATION DOSE FACTORS
TEEN
(mrem/yr per uCi/m^3)

Nuclide	Bone	Liver	Tbody	Thyroid	Kidney	Lung	Gltract
BA-139	1.340E+00	9.440E-04	3.900E-02	0.000E+00	8.880E-04	6.460E+03	6.450E+03
BA-140	5.470E+04	6.700E+01	3.520E+03	0.000E+00	2.280E+01	2.030E+06	2.290E+05
BA-141	1.420E-01	1.060E-04	4.740E-03	0.000E+00	9.840E-05	3.290E+03	7.460E-04
BA-142	3.700E-02	3.700E-05	2.270E-03	0.000E+00	3.140E-05	1.910E+03	0.000E+00
LA-140	4.790E+02	2.360E+02	6.260E+01	0.000E+00	0.000E+00	2.140E+05	4.870E+05
LA-142	9.600E-01	4.250E-01	1.060E-01	0.000E+00	0.000E+00	1.020E+04	1.200E+04
CE-141	2.840E+04	1.900E+04	2.170E+03	0.000E+00	8.880E+03	6.140E+05	1.260E+05
CE-143	2.660E+02	1.940E+02	2.160E+01	0.000E+00	8.640E+01	1.300E+05	2.550E+05
CE-144	4.890E+06	2.020E+06	2.620E+05	0.000E+00	1.210E+06	1.340E+07	8.640E+05
PR-143	1.340E+04	5.310E+03	6.620E+02	0.000E+00	3.090E+03	4.830E+05	2.140E+05
PR-144	4.300E-02	1.760E-02	2.180E-03	0.000E+00	1.010E-02	1.750E+03	2.350E-04
ND-147	7.860E+03	8.560E+03	5.130E+02	0.000E+00	5.020E+03	3.720E+05	1.820E+05
EU-154	7.540E+06	9.840E+05	6.880E+05	0.000E+00	4.350E+06	7.300E+06	2.670E+05
EU-155	1.600E+06	1.570E+05	9.680E+04	0.000E+00	6.120E+05	1.210E+07	4.780E+05
W-187	1.200E+01	9.760E+00	3.430E+00	0.000E+00	0.000E+00	4.740E+04	1.770E+05
NP-239	3.380E+02	3.190E+01	1.770E+01	0.000E+00	1.000E+02	6.490E+04	1.320E+05

Attachment 12
Gaseous Effluent Pathway Dose Factors

INHALATION DOSE FACTORS
CHILD
(mrem/yr per uCi/m^3)

Nuclide	Bone	Liver	Tbody	Thyroid	Kidney	Lung	Gitract
H-3	0.000E+00	1.120E+03	1.120E+03	1.120E+03	1.120E+03	1.120E+03	1.120E+03
C-14	3.590E+04	6.730E+03	6.730E+03	6.730E+03	6.730E+03	6.730E+03	6.730E+03
NA-24	1.610E+04	1.610E+04	1.610E+04	1.610E+04	1.610E+04	1.610E+04	1.610E+04
P-32	2.600E+06	1.140E+05	9.880E+04	0.000E+00	0.000E+00	0.000E+00	4.220E+04
CR-51	0.000E+00	0.000E+00	1.540E+02	8.550E+01	2.430E+01	1.700E+04	1.080E+03
MN-54	0.000E+00	4.290E+04	9.510E+03	0.000E+00	1.000E+04	1.580E+06	2.290E+04
MN-56	0.000E+00	1.660E+00	3.120E-01	0.000E+00	1.670E+00	1.310E+04	1.230E+05
FE-55	4.740E+04	2.520E+04	7.770E+03	0.000E+00	0.000E+00	1.110E+05	2.870E+03
FE-59	2.070E+04	3.340E+04	1.670E+04	0.000E+00	0.000E+00	1.270E+06	7.070E+04
CO-57	0.000E+00	9.030E+02	1.070E+03	0.000E+00	0.000E+00	5.070E+05	1.320E+04
CO-58	0.000E+00	1.770E+03	3.160E+03	0.000E+00	0.000E+00	1.110E+06	3.440E+04
CO-60	0.000E+00	1.310E+04	2.260E+04	0.000E+00	0.000E+00	7.070E+06	9.620E+04
NI-63	8.210E+05	4.630E+04	2.800E+04	0.000E+00	0.000E+00	2.750E+05	6.330E+03
NI-65	2.990E+00	2.960E-01	1.640E-01	0.000E+00	0.000E+00	8.180E+03	8.400E+04
CU-64	0.000E+00	1.990E+00	1.070E+00	0.000E+00	6.030E+00	9.580E+03	3.670E+04
ZN-65	4.260E+04	1.130E+05	7.030E+04	0.000E+00	7.140E+04	9.950E+05	1.630E+04
ZN-69	6.700E-02	9.660E-02	8.920E-03	0.000E+00	5.850E-02	1.420E+03	9.510E+03
BR-82	0.000E+00	0.000E+00	2.090E+04	0.000E+00	0.000E+00	0.000E+00	0.000E+00
BR-83	0.000E+00	0.000E+00	4.740E+02	0.000E+00	0.000E+00	0.000E+00	0.000E+00
BR-84	0.000E+00	0.000E+00	5.480E+02	0.000E+00	0.000E+00	0.000E+00	0.000E+00
BR-85	0.000E+00	0.000E+00	2.530E+01	0.000E+00	0.000E+00	0.000E+00	0.000E+00
RB-86	0.000E+00	1.980E+05	1.140E+05	0.000E+00	0.000E+00	0.000E+00	7.990E+03
RB-88	0.000E+00	5.620E+02	3.660E+02	0.000E+00	0.000E+00	0.000E+00	1.720E+01
RB-89	0.000E+00	3.450E+02	2.900E+02	0.000E+00	0.000E+00	0.000E+00	1.890E+00
SR-89	5.990E+05	0.000E+00	1.720E+04	0.000E+00	0.000E+00	2.160E+06	1.670E+05
SR-90	1.010E+08	0.000E+00	6.440E+06	0.000E+00	0.000E+00	1.480E+07	3.430E+05
SR-91	1.210E+02	0.000E+00	4.590E+00	0.000E+00	0.000E+00	5.330E+04	1.740E+05
SR-92	1.310E+01	0.000E+00	5.250E-01	0.000E+00	0.000E+00	2.400E+04	2.420E+05
Y-90	4.110E+03	0.000E+00	1.110E+02	0.000E+00	0.000E+00	2.620E+05	2.680E+05
Y-91M	5.070E-01	0.000E+00	1.840E-02	0.000E+00	0.000E+00	2.810E+03	1.720E+03
Y-91	9.140E+05	0.000E+00	2.440E+04	0.000E+00	0.000E+00	2.630E+06	1.840E+05
Y-92	2.040E+01	0.000E+00	5.810E-01	0.000E+00	0.000E+00	2.390E+04	2.390E+05
Y-93	1.860E+02	0.000E+00	5.110E+00	0.000E+00	0.000E+00	7.440E+04	3.890E+05
ZR-95	1.900E+05	4.180E+04	3.700E+04	0.000E+00	5.960E+04	2.230E+06	6.110E+04

Attachment 12
Gaseous Effluent Pathway Dose Factors

INHALATION DOSE FACTORS
CHILD
(mrem/yr per uCi/m^3)

Nuclide	Bone	Liver	Tbody	Thyroid	Kidney	Lung	Gitract
ZR-97	1.880E+02	2.720E+01	1.600E+01	0.000E+00	3.890E+01	1.130E+05	3.510E+05
NB-95	2.350E+04	9.180E+03	6.550E+03	0.000E+00	8.620E+03	6.140E+05	3.700E+04
NB-97	4.290E-01	7.700E-02	3.600E-02	0.000E+00	8.550E-02	3.420E+03	2.780E+04
MO-99	0.000E+00	1.720E+02	4.260E+01	0.000E+00	3.920E+02	1.350E+05	1.270E+05
TC-99M	1.780E-03	3.480E-03	5.770E-02	0.000E+00	5.070E-02	9.510E+02	4.810E+03
TC-101	8.100E-05	8.510E-05	1.080E-03	0.000E+00	1.450E-03	5.850E+02	1.630E+01
RU-103	2.790E+03	0.000E+00	1.070E+03	0.000E+00	7.030E+03	6.620E+05	4.480E+04
RU-105	1.530E+00	0.000E+00	5.550E-01	0.000E+00	1.340E+00	1.590E+04	9.950E+04
RU-106	1.360E+05	0.000E+00	1.690E+04	0.000E+00	1.840E+05	1.430E+07	4.290E+05
RH-103M	0.000E+00	0.000E+00	0.000E+00	0.000E+00	0.000E+00	0.000E+00	0.000E+00
RH-106	0.000E+00	0.000E+00	0.000E+00	0.000E+00	0.000E+00	0.000E+00	0.000E+00
AG-110M	1.690E+04	1.140E+04	9.140E+03	0.000E+00	2.120E+04	5.480E+06	1.000E+05
SB-122	1.440E+03	1.980E+03	1.900E+04	4.960E+02	7.180E+02	7.730E+04	9.360E+04
SB-124	5.740E+04	7.400E+02	2.000E+04	1.260E+02	0.000E+00	3.240E+06	1.640E+05
SB-125	9.840E+04	7.590E+02	2.070E+04	9.100E+01	0.000E+00	2.320E+06	4.030E+04
TE-125M	6.730E+03	2.330E+03	9.140E+02	1.920E+03	0.000E+00	4.770E+05	3.380E+04
TE-127M	2.490E+04	8.550E+03	3.020E+03	6.070E+03	6.360E+04	1.480E+06	7.140E+04
TE-127	2.770E+00	9.510E-01	6.110E-01	1.960E+00	7.070E+00	1.000E+04	5.620E+04
TE-129M	1.920E+04	6.850E+03	3.040E+03	6.330E+03	5.030E+04	1.760E+06	1.820E+05
TE-129	9.770E-02	3.500E-02	2.380E-02	7.140E-02	2.570E-01	2.930E+03	2.550E+04
TE-131M	1.340E+02	5.920E+01	5.070E+01	9.770E+01	4.000E+02	2.060E+05	3.080E+05
TE-131	2.170E-02	8.440E-03	6.590E-03	1.700E-02	5.880E-02	2.050E+03	1.330E+03
TE-132	4.810E+02	2.720E+02	2.630E+02	3.170E+02	1.840E+03	3.770E+05	1.380E+05
I-130	8.180E+03	1.640E+04	8.440E+03	1.850E+06	2.450E+04	0.000E+00	5.110E+03
I-131	4.810E+04	4.810E+04	2.730E+04	1.620E+07	7.880E+04	0.000E+00	2.840E+03
I-132	2.120E+03	4.070E+03	1.880E+03	1.940E+05	6.250E+03	0.000E+00	3.200E+03
I-133	1.660E+04	2.030E+04	7.700E+03	3.850E+06	3.380E+04	0.000E+00	5.480E+03
I-134	1.170E+03	2.160E+03	9.950E+02	5.070E+04	3.300E+03	0.000E+00	9.550E+02
I-135	4.920E+03	8.730E+03	4.140E+03	7.920E+05	1.340E+04	0.000E+00	4.440E+03
CS-134	6.510E+05	1.010E+06	2.250E+05	0.000E+00	3.300E+05	1.210E+05	3.850E+03
CS-136	6.510E+04	1.710E+05	1.160E+05	0.000E+00	9.550E+04	1.450E+04	4.180E+03
CS-137	9.070E+05	8.250E+05	1.280E+05	0.000E+00	2.820E+05	1.040E+05	3.620E+03
CS-138	6.330E+02	8.400E+02	5.550E+02	0.000E+00	6.220E+02	6.810E+01	2.700E+02

Attachment 12
Gaseous Effluent Pathway Dose Factors

INHALATION DOSE FACTORS
CHILD
(mrem/yr per uCi/m^3)

Nuclide	Bone	Liver	Tbody	Thyroid	Kidney	Lung	Gltract
BA-139	1.840E+00	9.840E-04	5.370E-02	0.000E+00	8.620E-04	5.770E+03	5.770E+04
BA-140	7.400E+04	6.480E+01	4.330E+03	0.000E+00	2.110E+01	1.740E+06	1.020E+05
BA-141	1.960E-01	1.090E-04	6.360E-03	0.000E+00	9.470E-05	2.920E+03	2.750E+02
BA-142	5.000E-02	3.600E-05	2.790E-03	0.000E+00	2.910E-05	1.640E+03	2.740E+00
LA-140	6.440E+02	2.250E+02	7.550E+01	0.000E+00	0.000E+00	1.830E+05	2.260E+05
LA-142	1.300E+00	4.110E-01	1.290E-01	0.000E+00	0.000E+00	8.700E+03	7.590E+04
CE-141	3.920E+04	1.950E+04	2.900E+03	0.000E+00	8.550E+03	5.440E+05	5.660E+04
CE-143	3.660E+02	1.990E+02	2.870E+01	0.000E+00	8.360E+01	1.150E+05	1.270E+05
CE-144	6.770E+06	2.120E+06	3.610E+05	0.000E+00	1.170E+06	1.200E+07	3.890E+05
PR-143	1.850E+04	5.550E+03	9.140E+02	0.000E+00	3.000E+03	4.330E+05	9.730E+04
PR-144	5.960E-02	1.850E-02	3.000E-03	0.000E+00	9.770E-03	1.570E+03	1.970E+02
ND-147	1.080E+04	8.730E+03	6.810E+02	0.000E+00	4.810E+03	3.280E+05	8.210E+04
EU-154	1.010E+07	9.210E+05	8.400E+05	0.000E+00	4.030E+06	6.140E+06	1.100E+05
EU-155	2.070E+06	1.500E+05	1.180E+05	0.000E+00	5.590E+05	1.030E+06	1.990E+05
W-187	1.630E+01	9.660E+00	4.330E+00	0.000E+00	0.000E+00	4.110E+04	9.100E+04
NP-239	4.700E+02	3.340E+01	2.350E+01	0.000E+00	9.730E+01	5.810E+04	6.400E+04

Attachment 12
Gaseous Effluent Pathway Dose Factors

INHALATION DOSE FACTORS
INFANT
(mrem/yr per uCi/m^3)

Nuclide	Bone	Liver	Tbody	Thyroid	Kidney	Lung	Gltract
H-3	0.000E+00	6.470E+02	6.470E+02	6.470E+02	6.470E+02	6.470E+02	6.470E+02
C-14	2.650E+04	5.310E+03	5.310E+03	5.310E+03	5.310E+03	5.310E+03	5.310E+03
NA-24	1.060E+04	1.060E+04	1.060E+04	1.060E+04	1.060E+04	1.060E+04	1.060E+04
P-32	2.030E+06	1.120E+05	7.740E+04	0.000E+00	0.000E+00	0.000E+00	1.610E+04
CR-51	0.000E+00	0.000E+00	8.950E+01	5.750E+01	1.320E+01	1.280E+04	3.570E+02
MN-54	0.000E+00	2.530E+04	4.980E+03	0.000E+00	4.980E+03	1.000E+06	7.060E+03
MN-56	0.000E+00	1.540E+00	2.210E-01	0.000E+00	1.100E+00	1.250E+04	7.170E+04
FE-55	1.970E+04	1.170E+04	3.330E+03	0.000E+00	0.000E+00	8.690E+04	1.090E+03
FE-59	1.360E+04	2.350E+04	9.480E+03	0.000E+00	0.000E+00	1.020E+06	2.480E+04
CO-57	0.000E+00	6.510E+02	6.410E+02	0.000E+00	0.000E+00	3.790E+05	4.860E+03
CO-58	0.000E+00	1.220E+03	1.820E+03	0.000E+00	0.000E+00	7.770E+05	1.110E+04
CO-60	0.000E+00	8.020E+03	1.180E+04	0.000E+00	0.000E+00	4.510E+06	3.190E+04
NI-63	3.390E+05	2.040E+04	1.160E+04	0.000E+00	0.000E+00	2.090E+05	2.420E+03
NI-65	2.390E+00	2.840E-01	1.230E-01	0.000E+00	0.000E+00	8.120E+03	5.010E+04
CU-64	0.000E+00	1.880E+00	7.740E-01	0.000E+00	3.980E+00	9.300E+03	1.500E+04
ZN-65	1.930E+04	6.260E+04	3.110E+04	0.000E+00	3.250E+04	6.470E+05	5.140E+04
ZN-69	5.390E-02	9.670E-02	7.180E-03	0.000E+00	4.020E-02	1.470E+03	1.320E+04
BR-82	0.000E+00	0.000E+00	1.330E+04	0.000E+00	0.000E+00	0.000E+00	0.000E+00
BR-83	0.000E+00	0.000E+00	3.810E+02	0.000E+00	0.000E+00	0.000E+00	0.000E+00
BR-84	0.000E+00	0.000E+00	4.000E+02	0.000E+00	0.000E+00	0.000E+00	0.000E+00
BR-85	0.000E+00	0.000E+00	2.040E+01	0.000E+00	0.000E+00	0.000E+00	0.000E+00
RB-86	0.000E+00	1.900E+05	8.820E+04	0.000E+00	0.000E+00	0.000E+00	3.040E+03
RB-88	0.000E+00	5.570E+02	2.870E+02	0.000E+00	0.000E+00	0.000E+00	3.390E+02
RB-89	0.000E+00	3.210E+02	2.060E+02	0.000E+00	0.000E+00	0.000E+00	6.820E+01
SR-89	3.980E+05	0.000E+00	1.140E+04	0.000E+00	0.000E+00	2.030E+06	6.400E+04
SR-90	4.090E+07	0.000E+00	2.590E+06	0.000E+00	0.000E+00	1.120E+07	1.310E+05
SR-91	9.560E+01	0.000E+00	3.460E+00	0.000E+00	0.000E+00	5.260E+04	7.340E+04
SR-92	1.050E+01	0.000E+00	3.910E-01	0.000E+00	0.000E+00	2.380E+04	1.400E+05
Y-90	3.290E+03	0.000E+00	8.820E+01	0.000E+00	0.000E+00	2.690E+05	1.040E+05
Y-91M	4.070E-01	0.000E+00	1.390E-02	0.000E+00	0.000E+00	2.790E+03	2.350E+03
Y-91	5.880E+05	0.000E+00	1.570E+04	0.000E+00	0.000E+00	2.450E+06	7.030E+04
Y-92	1.640E+01	0.000E+00	4.610E-01	0.000E+00	0.000E+00	2.450E+04	1.270E+05
Y-93	1.500E+02	0.000E+00	4.070E+00	0.000E+00	0.000E+00	7.640E+04	1.670E+05

Attachment 12
Gaseous Effluent Pathway Dose Factors

INHALATION DOSE FACTORS
INFANT
(mrem/yr per uCi/m^3)

Nuclide	Bone	Liver	Tbody	Thyroid	Kidney	Lung	Gltract
ZR-95	1.150E+05	2.790E+04	2.030E+04	0.000E+00	3.110E+04	1.750E+06	2.170E+04
ZR-97	1.500E+02	2.560E+01	1.170E+01	0.000E+00	2.590E+01	1.100E+05	1.400E+05
NB-95	1.570E+04	6.430E+03	3.780E+03	0.000E+00	4.720E+03	4.790E+05	1.270E+04
NB-97	3.420E-01	7.290E-02	2.630E-02	0.000E+00	5.700E-02	3.320E+03	2.690E+04
MO-99	0.000E+00	1.650E+02	3.230E+01	0.000E+00	2.650E+02	1.350E+05	4.870E+04
TC-99M	1.400E-03	2.880E-03	3.720E-02	0.000E+00	3.110E-02	8.110E+02	2.030E+03
TC-101	6.510E-05	8.230E-05	8.120E-04	0.000E+00	9.790E-04	5.840E+02	8.440E+02
RU-103	2.020E+03	0.000E+00	6.790E+02	0.000E+00	4.240E+03	5.520E+05	1.610E+04
RU-105	1.220E+00	0.000E+00	4.100E-01	0.000E+00	8.990E-01	1.570E+04	4.840E+04
RU-106	8.680E+04	0.000E+00	1.090E+04	0.000E+00	1.070E+05	1.160E+07	1.640E+05
RH-103M	0.000E+00	0.000E+00	0.000E+00	0.000E+00	0.000E+00	0.000E+00	0.000E+00
RH-106	0.000E+00	0.000E+00	0.000E+00	0.000E+00	0.000E+00	0.000E+00	0.000E+00
AG-110M	9.980E+03	7.220E+03	5.000E+03	0.000E+00	1.090E+04	3.670E+06	3.300E+04
SB-122	5.430E+02	7.200E+02	7.200E+03	1.880E+02	2.720E+02	2.930E+04	3.540E+04
SB-124	3.790E+04	5.560E+02	1.200E+04	1.010E+02	0.000E+00	2.650E+06	5.910E+04
SB-125	5.170E+04	4.770E+02	1.090E+04	6.230E+01	0.000E+00	1.640E+06	1.470E+04
TE-125M	4.760E+03	1.990E+03	6.580E+02	1.620E+03	0.000E+00	4.470E+05	1.290E+04
TE-127M	1.670E+04	6.900E+03	2.070E+03	4.870E+03	3.750E+04	1.310E+06	2.730E+04
TE-127	2.230E+00	9.530E-01	4.890E-01	1.850E+00	4.860E+00	1.030E+04	2.440E+04
TE-129M	1.410E+04	6.090E+03	2.230E+03	5.470E+03	3.180E+04	1.680E+06	6.900E+04
TE-129	7.880E-02	3.470E-02	1.880E-02	6.750E-02	1.750E-01	3.000E+03	2.630E+04
TE-131M	1.070E+02	5.500E+01	3.630E+01	8.930E+01	2.650E+02	1.990E+05	1.190E+05
TE-131	1.740E-02	8.220E-03	5.000E-03	1.580E-02	3.990E-02	2.060E+03	8.220E+03
TE-132	3.720E+02	2.370E+02	1.760E+02	2.790E+02	1.030E+03	3.400E+05	4.410E+04
I-130	6.360E+03	1.390E+04	5.570E+03	1.600E+06	1.530E+04	0.000E+00	1.990E+03
I-131	3.790E+04	4.440E+04	1.960E+04	1.480E+07	5.180E+04	0.000E+00	1.060E+03
I-132	1.690E+03	3.540E+03	1.260E+03	1.690E+05	3.950E+03	0.000E+00	1.900E+03
I-133	1.320E+04	1.920E+04	5.600E+03	3.560E+06	2.240E+04	0.000E+00	2.160E+03
I-134	9.210E+02	1.880E+03	6.650E+02	4.450E+04	2.090E+03	0.000E+00	1.290E+03
I-135	3.860E+03	7.600E+03	2.770E+03	6.960E+05	8.470E+03	0.000E+00	1.830E+03
CS-134	3.960E+05	7.030E+05	7.450E+04	0.000E+00	1.900E+05	7.970E+04	1.330E+03
CS-136	4.830E+04	1.350E+05	5.290E+04	0.000E+00	5.640E+04	1.180E+04	1.430E+03
CS-137	5.490E+05	6.120E+05	4.550E+04	0.000E+00	1.720E+05	7.130E+04	1.330E+03
CS-138	5.050E+02	7.810E+02	3.980E+02	0.000E+00	4.100E+02	6.540E+01	8.760E+02

Attachment 12
Gaseous Effluent Pathway Dose Factors

INHALATION DOSE FACTORS
INFANT
(mrem/yr per uCi/m^3)

Nuclide	Bone	Liver	Tbody	Thyroid	Kidney	Lung	Gltract
BA-139	1.480E+00	9.840E-04	4.300E-02	0.000E+00	5.920E-04	5.950E+03	5.100E+04
BA-140	5.600E+04	5.600E+01	2.900E+03	0.000E+00	1.340E+01	1.600E+06	3.840E+04
BA-141	1.570E-01	1.080E-04	4.970E-03	0.000E+00	6.500E-05	2.970E+03	4.750E+03
BA-142	3.980E-02	3.300E-05	1.960E-03	0.000E+00	1.900E-05	1.550E+03	6.930E+02
LA-140	5.050E+02	2.000E+02	5.150E+01	0.000E+00	0.000E+00	1.680E+05	8.480E+04
LA-142	1.030E+00	3.770E-01	9.040E-02	0.000E+00	0.000E+00	8.220E+03	5.950E+04
CE-141	2.770E+04	1.670E+04	1.990E+03	0.000E+00	5.250E+03	5.170E+05	2.160E+04
CE-143	2.930E+02	1.930E+02	2.210E+01	0.000E+00	5.640E+01	1.160E+05	4.970E+04
CE-144	3.190E+06	1.210E+06	1.760E+05	0.000E+00	5.380E+05	9.840E+06	1.480E+05
PR-143	1.400E+04	5.240E+03	6.990E+02	0.000E+00	1.970E+03	4.330E+05	3.720E+04
PR-144	4.790E-02	1.850E-02	2.410E-03	0.000E+00	6.720E-03	1.610E+03	4.280E+03
ND-147	7.940E+03	8.130E+03	5.000E+02	0.000E+00	3.150E+03	3.220E+05	3.120E+04
EU-154	4.140E+06	4.840E+05	3.430E+05	0.000E+00	1.540E+06	4.270E+06	3.980E+04
EU-155	8.360E+05	8.010E+04	4.840E+04	0.000E+00	2.210E+05	7.280E+05	7.270E+04
W-187	1.300E+01	9.020E+00	3.120E+00	0.000E+00	0.000E+00	3.960E+04	3.560E+04
NP-239	3.710E+02	3.320E+01	1.880E+01	0.000E+00	6.620E+01	5.950E+04	2.490E+04

Attachment 12
Gaseous Effluent Pathway Dose Factors

GRASS-COW-MILK DOSE FACTORS
ADULT
(m^2 *mrem/yr per uCi/sec)

Nuclide	Bone	Liver	Tbody	Thyroid	Kidney	Lung	Gitract
H-3	0.000E+00	7.630E+02	7.630E+02	7.630E+02	7.630E+02	7.630E+02	7.630E+02
C-14	3.630E+05	7.260E+04	7.260E+04	7.260E+04	7.260E+04	7.260E+04	7.260E+04
NA-24	2.540E+06	2.540E+06	2.540E+06	2.540E+06	2.540E+06	2.540E+06	2.540E+06
P-32	1.710E+10	1.060E+09	6.600E+08	0.000E+00	0.000E+00	0.000E+00	1.920E+09
CR-51	0.000E+00	0.000E+00	2.860E+04	1.710E+04	6.300E+03	3.800E+04	7.200E+06
MN-54	0.000E+00	8.400E+06	1.600E+06	0.000E+00	2.500E+06	0.000E+00	2.570E+07
MN-56	0.000E+00	4.230E-03	7.510E-04	0.000E+00	5.380E-03	0.000E+00	1.350E-01
FE-55	2.510E+07	1.730E+07	4.040E+06	0.000E+00	0.000E+00	9.670E+06	9.950E+06
FE-59	2.980E+07	7.000E+07	2.680E+07	0.000E+00	0.000E+00	1.950E+07	2.330E+08
CO-57	0.000E+00	1.280E+06	2.130E+06	0.000E+00	0.000E+00	0.000E+00	3.250E+07
CO-58	0.000E+00	4.720E+06	1.060E+07	0.000E+00	0.000E+00	0.000E+00	9.570E+07
CO-60	0.000E+00	1.640E+07	3.620E+07	0.000E+00	0.000E+00	0.000E+00	3.080E+08
NI-63	6.730E+09	4.660E+08	2.260E+08	0.000E+00	0.000E+00	0.000E+00	9.730E+07
NI-65	3.700E-01	4.810E-02	2.190E-02	0.000E+00	0.000E+00	0.000E+00	1.220E+00
CU-64	0.000E+00	2.410E+04	1.130E+04	0.000E+00	6.080E+04	0.000E+00	2.050E+06
ZN-65	1.370E+09	4.360E+09	1.970E+09	0.000E+00	2.920E+09	0.000E+00	2.750E+09
ZN-69	0.000E+00	0.000E+00	0.000E+00	0.000E+00	0.000E+00	0.000E+00	0.000E+00
BR-82	0.000E+00	0.000E+00	0.000E+00	0.000E+00	0.000E+00	0.000E+00	0.000E+00
BR-83	0.000E+00	0.000E+00	0.000E+00	0.000E+00	0.000E+00	0.000E+00	0.000E+00
BR-84	0.000E+00	0.000E+00	0.000E+00	0.000E+00	0.000E+00	0.000E+00	0.000E+00
BR-85	0.000E+00	0.000E+00	0.000E+00	0.000E+00	0.000E+00	0.000E+00	0.000E+00
RB-86	0.000E+00	2.590E+09	1.210E+09	0.000E+00	0.000E+00	0.000E+00	5.110E+08
RB-88	0.000E+00	0.000E+00	0.000E+00	0.000E+00	0.000E+00	0.000E+00	0.000E+00
RB-89	0.000E+00	0.000E+00	0.000E+00	0.000E+00	0.000E+00	0.000E+00	0.000E+00
SR-89	1.450E+09	0.000E+00	4.160E+07	0.000E+00	0.000E+00	0.000E+00	2.330E+08
SR-90	4.680E+10	0.000E+00	1.150E+10	0.000E+00	0.000E+00	0.000E+00	1.350E+09
SR-91	3.130E+04	0.000E+00	1.270E+03	0.000E+00	0.000E+00	0.000E+00	1.490E+05
SR-92	4.890E-01	0.000E+00	2.110E-02	0.000E+00	0.000E+00	0.000E+00	9.680E+00

Attachment 12
Gaseous Effluent Pathway Dose Factors

GRASS-COW-MILK DOSE FACTORS
ADULT
(m^2 *mrem/yr per uCi/sec)

Nuclide	Bone	Liver	Tbody	Thyroid	Kidney	Lung	Gitract
Y-90	7.070E+01	0.000E+00	1.900E+00	0.000E+00	0.000E+00	0.000E+00	7.500E+05
Y-91M	0.000E+00	0.000E+00	0.000E+00	0.000E+00	0.000E+00	0.000E+00	0.000E+00
Y-91	8.600E+03	0.000E+00	2.300E+02	0.000E+00	0.000E+00	0.000E+00	4.730E+06
Y-92	5.420E-05	0.000E+00	1.580E-06	0.000E+00	0.000E+00	0.000E+00	9.490E-01
Y-93	2.330E-01	0.000E+00	6.430E-03	0.000E+00	0.000E+00	0.000E+00	7.390E+03
ZR-95	9.460E+02	3.030E+02	2.050E+02	0.000E+00	4.760E+02	0.000E+00	9.620E+05
ZR-97	4.260E-01	8.590E-02	3.930E-02	0.000E+00	1.300E-01	0.000E+00	2.660E+04
NB-95	8.250E+04	4.590E+04	2.470E+04	0.000E+00	4.540E+04	0.000E+00	2.790E+08
NB-97	0.000E+00	0.000E+00	0.000E+00	0.000E+00	0.000E+00	0.000E+00	5.470E-09
MO-99	0.000E+00	2.520E+07	4.800E+06	0.000E+00	5.720E+07	0.000E+00	5.850E+07
TC-99M	3.250E+00	9.190E+00	1.170E+02	0.000E+00	1.400E+02	4.500E+00	5.440E+03
TC-101	0.000E+00	0.000E+00	0.000E+00	0.000E+00	0.000E+00	0.000E+00	0.000E+00
RU-103	1.020E+03	0.000E+00	4.390E+02	0.000E+00	3.890E+03	0.000E+00	1.190E+05
RU-105	8.570E-04	0.000E+00	3.380E-04	0.000E+00	1.110E-02	0.000E+00	5.240E-01
RU-106	2.040E+04	0.000E+00	2.580E+03	0.000E+00	3.940E+04	0.000E+00	1.320E+06
RH-103M	0.000E+00	0.000E+00	0.000E+00	0.000E+00	0.000E+00	0.000E+00	0.000E+00
RH-106	0.000E+00	0.000E+00	0.000E+00	0.000E+00	0.000E+00	0.000E+00	0.000E+00
AG-110M	5.830E+07	5.390E+07	3.200E+07	0.000E+00	1.060E+08	0.000E+00	2.200E+10
SB-122	6.010E+05	6.270E+05	7.590E+06	9.960E+04	2.960E+05	1.290E+05	7.470E+07
SB-124	8.580E+08	1.620E+07	3.400E+08	2.080E+06	0.000E+00	6.680E+08	2.440E+10
SB-125	6.810E+08	7.610E+06	1.620E+08	6.930E+05	0.000E+00	5.250E+08	7.500E+09
TE-125M	1.630E+07	5.900E+06	2.180E+06	4.900E+06	6.630E+07	0.000E+00	6.500E+07
TE-127M	4.580E+07	1.640E+07	5.580E+06	1.170E+07	1.860E+08	0.000E+00	1.540E+08
TE-127	6.720E+02	2.410E+02	1.450E+02	4.980E+02	2.740E+03	0.000E+00	5.300E+04
TE-129M	6.040E+07	2.250E+07	9.570E+06	2.080E+07	2.520E+08	0.000E+00	3.040E+08
TE-129	0.000E+00	0.000E+00	0.000E+00	0.000E+00	0.000E+00	0.000E+00	0.000E+00
TE-131M	3.610E+05	1.770E+05	1.470E+05	2.800E+05	1.790E+06	0.000E+00	1.750E+07
TE-131	0.000E+00	0.000E+00	0.000E+00	0.000E+00	0.000E+00	0.000E+00	0.000E+00
TE-132	2.390E+06	1.550E+06	1.450E+06	1.710E+06	1.490E+07	0.000E+00	7.320E+07
I-130	4.260E+05	1.260E+06	4.960E+05	1.070E+08	1.960E+06	0.000E+00	1.080E+06
I-131	2.960E+08	4.240E+08	2.430E+08	1.390E+11	7.270E+08	0.000E+00	1.120E+08
I-132	1.640E-01	4.370E-01	1.530E-01	1.530E+01	6.970E-01	0.000E+00	8.220E-02
I-133	3.970E+06	6.900E+06	2.100E+06	1.010E+09	1.200E+07	0.000E+00	6.200E+06

Attachment 12
Gaseous Effluent Pathway Dose Factors

GRASS-COW-MILK DOSE FACTORS
ADULT
(m^2 *mrem/yr per uCi/sec)

Nuclide	Bone	Liver	Tbody	Thyroid	Kidney	Lung	Gitract
I-134	0.000E+00	0.000E+00	0.000E+00	0.000E+00	0.000E+00	0.000E+00	0.000E+00
I-135	1.390E+04	3.630E+04	1.340E+04	2.400E+06	5.830E+04	0.000E+00	4.100E+04
CS-134	5.650E+09	1.340E+10	1.100E+10	0.000E+00	4.350E+09	1.440E+09	2.350E+08
CS-136	2.610E+08	1.030E+09	7.420E+08	0.000E+00	5.740E+08	7.870E+07	1.170E+08
CS-137	7.380E+09	1.010E+10	6.610E+09	0.000E+00	3.430E+09	1.140E+09	1.950E+08
CS-138	0.000E+00	0.000E+00	0.000E+00	0.000E+00	0.000E+00	0.000E+00	0.000E+00
BA-139	4.700E-08	0.000E+00	1.380E-09	0.000E+00	0.000E+00	0.000E+00	8.340E-08
BA-140	2.690E+07	3.380E+04	1.760E+06	0.000E+00	1.150E+04	1.930E+04	5.540E+07
BA-141	0.000E+00	0.000E+00	0.000E+00	0.000E+00	0.000E+00	0.000E+00	0.000E+00
BA-142	0.000E+00	0.000E+00	0.000E+00	0.000E+00	0.000E+00	0.000E+00	0.000E+00
LA-140	4.490E+00	2.260E+00	5.970E-01	0.000E+00	0.000E+00	0.000E+00	1.660E+05
LA-142	0.000E+00	0.000E+00	0.000E+00	0.000E+00	0.000E+00	0.000E+00	3.030E-08
CE-141	4.840E+03	3.270E+03	3.710E+02	0.000E+00	1.520E+03	0.000E+00	1.250E+07
CE-143	4.190E+01	3.090E+04	3.420E+00	0.000E+00	1.360E+01	0.000E+00	1.160E+06
CE-144	3.580E+05	1.500E+05	1.920E+04	0.000E+00	8.870E+04	0.000E+00	1.210E+08
PR-143	1.590E+02	6.370E+01	7.880E+00	0.000E+00	3.680E+01	0.000E+00	6.960E+05
PR-144	0.000E+00	0.000E+00	0.000E+00	0.000E+00	0.000E+00	0.000E+00	0.000E+00
ND-147	9.420E+01	1.090E+02	6.520E+00	0.000E+00	6.370E+01	0.000E+00	5.230E+05
EU-154	2.370E+04	2.910E+03	2.070E+03	0.000E+00	1.390E+04	0.000E+00	2.110E+06
EU-155	3.300E+03	4.680E+02	3.020E+02	0.000E+00	2.160E+03	0.000E+00	3.680E+05
W-187	6.560E+03	5.480E+03	1.920E+03	0.000E+00	0.000E+00	0.000E+00	1.800E+06
NP-239	3.660E+00	3.600E-01	1.980E-01	0.000E+00	1.120E+00	0.000E+00	7.390E+04

Attachment 12
Gaseous Effluent Pathway Dose Factors

GRASS-COW-MILK DOSE FACTORS
TEEN
(m^2 *mrem/yr per uCi/sec)

Nuclide	Bone	Liver	Tbody	Thyroid	Kidney	Lung	Gitract
H-3	0.000E+00	9.940E+02	9.940E+02	9.940E+02	9.940E+02	9.940E+02	9.940E+02
C-14	6.700E+05	1.340E+05	1.340E+05	1.340E+05	1.340E+05	1.340E+05	1.340E+05
NA-24	4.440E+06	4.440E+06	4.440E+06	4.440E+06	4.440E+06	4.440E+06	4.440E+06
P-32	3.150E+10	1.950E+09	1.220E+09	0.000E+00	0.000E+00	0.000E+00	2.650E+09
CR-51	0.000E+00	0.000E+00	5.000E+04	2.780E+04	1.100E+04	7.130E+04	8.400E+06
MN-54	0.000E+00	1.400E+07	2.780E+06	0.000E+00	4.170E+06	0.000E+00	2.870E+07
MN-56	0.000E+00	7.510E-03	1.330E-03	0.000E+00	9.500E-03	0.000E+00	4.940E-01
FE-55	4.450E+07	3.160E+07	7.360E+06	0.000E+00	0.000E+00	2.000E+07	1.370E+07
FE-59	5.200E+07	1.210E+08	4.680E+07	0.000E+00	0.000E+00	3.820E+07	2.870E+08
CO-57	0.000E+00	2.250E+06	3.760E+06	0.000E+00	0.000E+00	0.000E+00	4.190E+07
CO-58	0.000E+00	7.950E+06	1.830E+07	0.000E+00	0.000E+00	0.000E+00	1.100E+08
CO-60	0.000E+00	2.780E+07	6.260E+07	0.000E+00	0.000E+00	0.000E+00	3.620E+08
NI-63	1.180E+10	8.350E+08	4.010E+08	0.000E+00	0.000E+00	0.000E+00	1.330E+08
NI-65	6.780E-01	8.660E-02	3.940E-02	0.000E+00	0.000E+00	0.000E+00	4.700E+00
CU-64	0.000E+00	4.290E+04	2.020E+04	0.000E+00	1.090E+05	0.000E+00	3.330E+06
ZN-65	2.110E+09	7.310E+09	3.410E+09	0.000E+00	4.680E+09	0.000E+00	3.100E+09
ZN-69	0.000E+00	0.000E+00	0.000E+00	0.000E+00	0.000E+00	0.000E+00	0.000E+00
BR-82	0.000E+00	0.000E+00	0.000E+00	0.000E+00	0.000E+00	0.000E+00	0.000E+00
BR-83	0.000E+00	0.000E+00	0.000E+00	0.000E+00	0.000E+00	0.000E+00	0.000E+00
BR-84	0.000E+00	0.000E+00	0.000E+00	0.000E+00	0.000E+00	0.000E+00	0.000E+00
BR-85	0.000E+00	0.000E+00	0.000E+00	0.000E+00	0.000E+00	0.000E+00	0.000E+00
RB-86	0.000E+00	4.730E+09	2.220E+09	0.000E+00	0.000E+00	0.000E+00	7.000E+08
RB-88	0.000E+00	0.000E+00	0.000E+00	0.000E+00	0.000E+00	0.000E+00	0.000E+00
RB-89	0.000E+00	0.000E+00	0.000E+00	0.000E+00	0.000E+00	0.000E+00	0.000E+00
SR-89	2.670E+09	0.000E+00	7.660E+07	0.000E+00	0.000E+00	0.000E+00	3.180E+08
SR-90	6.610E+10	0.000E+00	1.630E+10	0.000E+00	0.000E+00	0.000E+00	1.860E+09
SR-91	5.750E+04	0.000E+00	2.290E+03	0.000E+00	0.000E+00	0.000E+00	2.610E+05
SR-92	8.950E-01	0.000E+00	3.810E-02	0.000E+00	0.000E+00	0.000E+00	2.280E+01
Y-90	1.300E+02	0.000E+00	3.500E+00	0.000E+00	0.000E+00	0.000E+00	1.070E+06
Y-91M	0.000E+00	0.000E+00	0.000E+00	0.000E+00	0.000E+00	0.000E+00	0.000E+00
Y-91	1.580E+04	0.000E+00	4.240E+02	0.000E+00	0.000E+00	0.000E+00	6.480E+06
Y-92	1.000E-04	0.000E+00	2.900E-06	0.000E+00	0.000E+00	0.000E+00	2.750E+00
Y-93	4.300E-01	0.000E+00	1.180E-02	0.000E+00	0.000E+00	0.000E+00	1.310E+04

Attachment 12
Gaseous Effluent Pathway Dose Factors

GRASS-COW-MILK DOSE FACTORS
TEEN
(m^2 *mrem/yr per uCi/sec)

Nuclide	Bone	Liver	Tbody	Thyroid	Kidney	Lung	Gltract
ZR-95	1.650E+03	5.220E+02	3.590E+02	0.000E+00	7.670E+02	0.000E+00	1.200E+06
ZR-97	7.750E-01	1.530E-01	7.060E-02	0.000E+00	2.320E-01	0.000E+00	4.150E+04
NB-95	1.410E+05	7.800E+04	4.300E+04	0.000E+00	7.570E+04	0.000E+00	3.340E+08
NB-97	0.000E+00	0.000E+00	0.000E+00	0.000E+00	0.000E+00	0.000E+00	6.340E-08
MO-99	0.000E+00	4.560E+07	8.690E+06	0.000E+00	1.040E+08	0.000E+00	8.160E+07
TC-99M	5.640E+00	1.570E+01	2.040E+02	0.000E+00	2.340E+02	8.730E+00	1.030E+04
TC-101	0.000E+00	0.000E+00	0.000E+00	0.000E+00	0.000E+00	0.000E+00	0.000E+00
RU-103	1.810E+03	0.000E+00	7.750E+02	0.000E+00	6.400E+03	0.000E+00	1.520E+05
RU-105	1.570E-03	0.000E+00	6.080E-04	0.000E+00	1.970E-02	0.000E+00	1.260E+00
RU-106	3.750E+04	0.000E+00	4.730E+03	0.000E+00	7.230E+04	0.000E+00	1.800E+06
RH-103M	0.000E+00	0.000E+00	0.000E+00	0.000E+00	0.000E+00	0.000E+00	0.000E+00
RH-106	0.000E+00	0.000E+00	0.000E+00	0.000E+00	0.000E+00	0.000E+00	0.000E+00
AG-110M	9.630E+07	9.110E+07	5.540E+07	0.000E+00	1.740E+08	0.000E+00	2.560E+10
SB-122	7.760E+05	8.090E+05	9.800E+06	1.290E+05	3.820E+05	1.660E+05	9.640E+07
SB-124	1.530E+09	2.820E+07	5.970E+08	3.470E+06	0.000E+00	1.340E+09	3.080E+10
SB-125	1.220E+09	1.330E+07	2.850E+08	1.160E+06	0.000E+00	1.070E+09	9.480E+09
TE-125M	3.000E+07	1.080E+07	4.020E+06	8.390E+06	0.000E+00	0.000E+00	8.860E+07
TE-127M	8.440E+07	2.990E+07	1.000E+07	2.010E+07	3.420E+08	0.000E+00	2.100E+08
TE-127	1.240E+03	4.410E+02	2.680E+02	8.590E+02	5.040E+03	0.000E+00	9.610E+04
TE-129M	1.110E+08	4.100E+07	1.750E+07	3.570E+07	4.620E+08	0.000E+00	4.150E+08
TE-129	0.000E+00	0.000E+00	0.000E+00	0.000E+00	1.670E-09	0.000E+00	2.180E-09
TE-131M	6.570E+05	3.150E+05	2.630E+05	4.740E+05	3.290E+06	0.000E+00	2.530E+07
TE-131	0.000E+00	0.000E+00	0.000E+00	0.000E+00	0.000E+00	0.000E+00	0.000E+00
TE-132	4.280E+06	2.710E+06	2.550E+06	2.860E+06	2.600E+07	0.000E+00	8.580E+07
I-130	7.490E+05	2.170E+06	8.660E+05	1.770E+08	3.340E+06	0.000E+00	1.670E+06
I-131	5.380E+08	7.530E+08	4.040E+08	2.200E+11	1.300E+09	0.000E+00	1.490E+08
I-132	2.900E-01	7.590E-01	2.720E-01	2.560E+01	1.200E+00	0.000E+00	3.310E-01
I-133	7.240E+06	1.230E+07	3.750E+06	1.720E+09	2.150E+07	0.000E+00	9.300E+06
I-134	0.000E+00	0.000E+00	0.000E+00	0.000E+00	0.000E+00	0.000E+00	0.000E+00
I-135	2.470E+04	6.350E+04	2.350E+04	4.080E+06	1.000E+05	0.000E+00	7.030E+04
CS-134	9.810E+09	2.310E+10	1.070E+10	0.000E+00	7.340E+09	2.800E+09	2.870E+08
CS-136	4.450E+08	1.750E+09	1.180E+09	0.000E+00	9.530E+08	1.500E+08	1.410E+08
CS-137	1.340E+10	1.780E+10	6.200E+09	0.000E+00	6.060E+09	2.350E+09	2.530E+08
CS-138	0.000E+00	0.000E+00	0.000E+00	0.000E+00	0.000E+00	0.000E+00	0.000E+00

Attachment 12
Gaseous Effluent Pathway Dose Factors

GRASS-COW-MILK DOSE FACTORS
TEEN
(m^2 *mrem/yr per uCi/sec)

Nuclide	Bone	Liver	Tbody	Thyroid	Kidney	Lung	Gltract
BA-139	8.690E-08	0.000E+00	2.530E-09	0.000E+00	0.000E+00	0.000E+00	7.750E-07
BA-140	4.850E+07	5.950E+04	3.130E+06	0.000E+00	2.020E+04	4.000E+04	7.490E+07
BA-141	0.000E+00	0.000E+00	0.000E+00	0.000E+00	0.000E+00	0.000E+00	0.000E+00
BA-142	0.000E+00	0.000E+00	0.000E+00	0.000E+00	0.000E+00	0.000E+00	0.000E+00
LA-140	8.060E+00	3.960E+00	1.050E+00	0.000E+00	0.000E+00	0.000E+00	2.270E+05
LA-142	0.000E+00	0.000E+00	0.000E+00	0.000E+00	0.000E+00	0.000E+00	2.230E-07
CE-141	8.870E+03	5.920E+03	6.810E+02	0.000E+00	2.790E+03	0.000E+00	1.690E+07
CE-143	7.690E+01	5.600E+04	6.250E+00	0.000E+00	2.510E+01	0.000E+00	1.680E+06
CE-144	6.580E+05	2.720E+05	3.540E+04	0.000E+00	1.630E+05	0.000E+00	1.660E+08
PR-143	2.920E+02	1.170E+02	1.450E+01	0.000E+00	6.770E+01	0.000E+00	9.610E+05
PR-144	0.000E+00	0.000E+00	0.000E+00	0.000E+00	0.000E+00	0.000E+00	0.000E+00
ND-147	1.810E+02	1.970E+02	1.180E+01	0.000E+00	1.160E+02	0.000E+00	7.110E+05
EU-154	3.920E+04	5.060E+03	3.570E+03	0.000E+00	2.260E+04	0.000E+00	2.670E+06
EU-155	8.600E+03	8.310E+02	5.140E+02	0.000E+00	3.250E+03	0.000E+00	4.760E+06
W-187	1.200E+04	9.780E+03	3.430E+03	0.000E+00	0.000E+00	0.000E+00	2.650E+06
NP-239	6.990E+00	6.590E-01	3.660E-01	0.000E+00	2.070E+00	0.000E+00	1.060E+05

Attachment 12
Gaseous Effluent Pathway Dose Factors

GRASS-COW-MILK DOSE FACTORS
CHILD
(m^2 *mrem/yr per uCi/sec)

Nuclide	Bone	Liver	Tbody	Thyroid	Kidney	Lung	Gitract
H-3	0.000E+00	1.570E+03	1.570E+03	1.570E+03	1.570E+03	1.570E+03	1.570E+03
C-14	1.650E+06	3.290E+05	3.290E+05	3.290E+05	3.290E+05	3.290E+05	3.290E+05
NA-24	9.230E+06	9.230E+06	9.230E+06	9.230E+06	9.230E+06	9.230E+06	9.230E+06
P-32	7.770E+10	3.640E+09	3.000E+09	0.000E+00	0.000E+00	0.000E+00	2.150E+09
CR-51	0.000E+00	0.000E+00	1.020E+05	5.660E+04	1.550E+04	1.030E+05	5.410E+06
MN-54	0.000E+00	2.090E+07	5.580E+06	0.000E+00	5.870E+06	0.000E+00	1.760E+07
MN-56	0.000E+00	1.310E-02	2.950E-03	0.000E+00	1.580E-02	0.000E+00	1.900E+00
FE-55	1.120E+08	5.930E+07	1.840E+07	0.000E+00	0.000E+00	3.350E+07	1.100E+07
FE-59	1.200E+08	1.950E+08	9.710E+07	0.000E+00	0.000E+00	5.650E+07	2.030E+08
CO-57	0.000E+00	3.840E+06	7.770E+06	0.000E+00	0.000E+00	0.000E+00	3.140E+07
CO-58	0.000E+00	1.210E+07	3.720E+07	0.000E+00	0.000E+00	0.000E+00	7.080E+07
CO-60	0.000E+00	4.320E+07	1.270E+08	0.000E+00	0.000E+00	0.000E+00	2.390E+08
NI-63	2.960E+10	1.590E+09	1.010E+09	0.000E+00	0.000E+00	0.000E+00	1.070E+08
NI-65	1.660E+00	1.560E-01	9.110E-02	0.000E+00	0.000E+00	0.000E+00	1.910E+01
CU-64	0.000E+00	7.550E+04	4.560E+04	0.000E+00	1.820E+05	0.000E+00	3.540E+06
ZN-65	4.130E+09	1.100E+10	6.850E+09	0.000E+00	6.940E+09	0.000E+00	1.930E+09
ZN-69	0.000E+00	0.000E+00	0.000E+00	0.000E+00	0.000E+00	0.000E+00	2.140E-09
BR-82	0.000E+00	0.000E+00	0.000E+00	0.000E+00	0.000E+00	0.000E+00	0.000E+00
BR-83	0.000E+00	0.000E+00	0.000E+00	0.000E+00	0.000E+00	0.000E+00	0.000E+00
BR-84	0.000E+00	0.000E+00	0.000E+00	0.000E+00	0.000E+00	0.000E+00	0.000E+00
BR-85	0.000E+00	0.000E+00	0.000E+00	0.000E+00	0.000E+00	0.000E+00	0.000E+00
RB-86	0.000E+00	8.770E+09	5.390E+09	0.000E+00	0.000E+00	0.000E+00	5.640E+08
RB-88	0.000E+00	0.000E+00	0.000E+00	0.000E+00	0.000E+00	0.000E+00	0.000E+00
RB-89	0.000E+00	0.000E+00	0.000E+00	0.000E+00	0.000E+00	0.000E+00	0.000E+00
SR-89	6.620E+09	0.000E+00	1.890E+08	0.000E+00	0.000E+00	0.000E+00	2.560E+08
SR-90	1.120E+11	0.000E+00	2.830E+10	0.000E+00	0.000E+00	0.000E+00	1.510E+09
SR-91	1.410E+05	0.000E+00	5.330E+03	0.000E+00	0.000E+00	0.000E+00	3.120E+05
SR-92	2.190E+00	0.000E+00	8.760E-02	0.000E+00	0.000E+00	0.000E+00	4.140E+01
Y-90	3.220E+02	0.000E+00	8.610E+00	0.000E+00	0.000E+00	0.000E+00	9.150E+05
Y-91M	0.000E+00	0.000E+00	0.000E+00	0.000E+00	0.000E+00	0.000E+00	0.000E+00
Y-91	3.910E+04	0.000E+00	1.040E+03	0.000E+00	0.000E+00	0.000E+00	5.210E+06
Y-92	2.460E-04	0.000E+00	7.030E-06	0.000E+00	0.000E+00	0.000E+00	7.100E+00
Y-93	1.060E+00	0.000E+00	2.900E-02	0.000E+00	0.000E+00	0.000E+00	1.570E+04

Attachment 12
Gaseous Effluent Pathway Dose Factors

GRASS-COW-MILK DOSE FACTORS
CHILD
(m^2 *mrem/yr per uCi/sec)

Nuclide	Bone	Liver	Tbody	Thyroid	Kidney	Lung	Gltract
ZR-95	3.840E+03	8.450E+02	7.520E+02	0.000E+00	1.210E+03	0.000E+00	8.810E+05
ZR-97	1.890E+00	2.720E-01	1.610E-01	0.000E+00	3.910E-01	0.000E+00	4.130E+04
NB-95	3.180E+05	1.240E+05	8.840E+04	0.000E+00	1.160E+05	0.000E+00	2.290E+08
NB-97	0.000E+00	0.000E+00	0.000E+00	0.000E+00	0.000E+00	0.000E+00	1.450E-06
MO-99	0.000E+00	8.290E+07	2.050E+07	0.000E+00	1.770E+08	0.000E+00	6.860E+07
TC-99M	1.290E+01	2.540E+01	4.200E+02	0.000E+00	3.680E+02	1.290E+01	1.440E+04
TC-101	0.000E+00	0.000E+00	0.000E+00	0.000E+00	0.000E+00	0.000E+00	0.000E+00
RU-103	4.290E+03	0.000E+00	1.650E+03	0.000E+00	1.080E+04	0.000E+00	1.110E+05
RU-105	3.820E-03	0.000E+00	1.390E-03	0.000E+00	3.360E-02	0.000E+00	2.490E+00
RU-106	9.240E+04	0.000E+00	1.150E+04	0.000E+00	1.250E+05	0.000E+00	1.440E+06
RH-103M	0.000E+00	0.000E+00	0.000E+00	0.000E+00	0.000E+00	0.000E+00	0.000E+00
RH-106	0.000E+00	0.000E+00	0.000E+00	0.000E+00	0.000E+00	0.000E+00	0.000E+00
AG-110M	2.090E+08	1.410E+08	1.130E+08	0.000E+00	2.630E+08	0.000E+00	1.680E+10
SB-122	4.140E+06	4.320E+06	5.230E+07	6.870E+05	2.040E+06	8.890E+05	5.150E+08
SB-124	3.620E+09	4.700E+07	1.270E+09	7.990E+06	0.000E+00	2.010E+09	2.260E+10
SB-125	2.900E+09	2.240E+07	6.080E+08	2.690E+06	0.000E+00	1.620E+09	6.930E+09
TE-125M	7.380E+07	2.000E+07	9.840E+06	2.070E+07	0.000E+00	0.000E+00	7.120E+07
TE-127M	2.080E+08	5.600E+07	2.470E+07	4.970E+07	5.930E+08	0.000E+00	1.680E+08
TE-127	3.060E+03	8.250E+02	6.560E+02	2.120E+03	8.710E+03	0.000E+00	1.200E+05
TE-129M	2.720E+08	7.610E+07	4.230E+07	8.780E+07	8.000E+08	0.000E+00	3.320E+08
TE-129	0.000E+00	0.000E+00	0.000E+00	0.000E+00	2.870E-09	0.000E+00	6.120E-08
TE-131M	1.600E+06	5.530E+05	5.890E+05	1.140E+06	5.350E+06	0.000E+00	2.240E+07
TE-131	0.000E+00	0.000E+00	0.000E+00	0.000E+00	0.000E+00	0.000E+00	0.000E+00
TE-132	1.020E+07	4.520E+06	5.460E+06	6.580E+06	4.200E+07	0.000E+00	4.550E+07
I-130	1.750E+06	3.540E+06	1.820E+06	3.900E+08	5.290E+06	0.000E+00	1.660E+06
I-131	1.300E+09	1.310E+09	7.460E+08	4.340E+11	2.150E+09	0.000E+00	1.170E+08
I-132	6.860E-01	1.260E+00	5.800E-01	5.850E+01	1.930E+00	0.000E+00	1.480E+00
I-133	1.760E+07	2.180E+07	8.230E+06	4.040E+09	3.630E+07	0.000E+00	8.770E+06
I-134	0.000E+00	0.000E+00	0.000E+00	0.000E+00	0.000E+00	0.000E+00	0.000E+00
I-135	5.840E+04	1.050E+05	4.970E+04	9.300E+06	1.610E+05	0.000E+00	8.000E+04
CS-134	2.260E+10	3.710E+10	7.830E+09	0.000E+00	1.150E+10	4.130E+09	2.000E+08
CS-136	1.000E+09	2.760E+09	1.790E+09	0.000E+00	1.470E+09	2.190E+08	9.700E+07
CS-137	3.220E+10	3.090E+10	4.550E+09	0.000E+00	1.010E+10	3.620E+09	1.930E+08
CS-138	0.000E+00	0.000E+00	0.000E+00	0.000E+00	0.000E+00	0.000E+00	0.000E+00

Attachment 12
Gaseous Effluent Pathway Dose Factors

GRASS-COW-MILK DOSE FACTORS
CHILD
(m^2 *mrem/yr per uCi/sec)

Nuclide	Bone	Liver	Tbody	Thyroid	Kidney	Lung	Gltract
BA-139	2.140E-07	0.000E+00	6.190E-09	0.000E+00	0.000E+00	0.000E+00	1.230E-05
BA-140	1.170E+08	1.030E+05	6.840E+06	0.000E+00	3.340E+04	6.120E+04	5.940E+07
BA-141	0.000E+00	0.000E+00	0.000E+00	0.000E+00	0.000E+00	0.000E+00	0.000E+00
BA-142	0.000E+00	0.000E+00	0.000E+00	0.000E+00	0.000E+00	0.000E+00	0.000E+00
LA-140	1.930E+01	6.740E+00	2.270E+00	0.000E+00	0.000E+00	0.000E+00	1.880E+05
LA-142	0.000E+00	0.000E+00	0.000E+00	0.000E+00	0.000E+00	0.000E+00	2.510E-06
CE-141	2.190E+04	1.090E+04	1.620E+03	0.000E+00	4.780E+03	0.000E+00	1.360E+07
CE-143	1.890E+02	1.020E+05	1.480E+01	0.000E+00	4.290E+01	0.000E+00	1.500E+06
CE-144	1.620E+06	5.090E+05	8.660E+04	0.000E+00	2.820E+05	0.000E+00	1.330E+08
PR-143	7.230E+02	2.170E+02	3.590E+01	0.000E+00	1.170E+02	0.000E+00	7.800E+05
PR-144	0.000E+00	0.000E+00	0.000E+00	0.000E+00	0.000E+00	0.000E+00	0.000E+00
ND-147	4.450E+02	3.600E+02	2.790E+01	0.000E+00	1.980E+02	0.000E+00	5.710E+05
EU-154	9.420E+04	8.470E+03	7.740E+03	0.000E+00	3.720E+04	0.000E+00	1.970E+06
EU-155	1.970E+04	1.420E+03	1.110E+03	0.000E+00	5.300E+03	0.000E+00	3.540E+06
W-187	2.910E+04	1.720E+04	7.730E+03	0.000E+00	0.000E+00	0.000E+00	2.420E+06
NP-239	1.720E+01	1.230E+00	8.680E-01	0.000E+00	3.570E+00	0.000E+00	9.140E+04

Attachment 12
Gaseous Effluent Pathway Dose Factors

GRASS-COW-MILK DOSE FACTORS
INFANT
(m^2 *mrem/yr per uCi/sec)

Nuclide	Bone	Liver	Tbody	Thyroid	Kidney	Lung	Gltract
H-3	0.000E+00	2.380E+03	2.380E+03	2.380E+03	2.380E+03	2.380E+03	2.380E+03
C-14	3.230E+06	6.890E+05	6.890E+05	6.890E+05	6.890E+05	6.890E+05	6.890E+05
NA-24	1.610E+07	1.610E+07	1.610E+07	1.610E+07	1.610E+07	1.610E+07	1.610E+07
P-32	1.600E+11	9.420E+09	6.210E+09	0.000E+00	0.000E+00	0.000E+00	2.170E+09
CR-51	0.000E+00	0.000E+00	1.610E+05	1.050E+05	2.300E+04	2.050E+05	4.710E+06
MN-54	0.000E+00	3.890E+07	8.830E+06	0.000E+00	8.630E+06	0.000E+00	1.430E+07
MN-56	0.000E+00	3.210E-02	5.530E-03	0.000E+00	2.760E-02	0.000E+00	2.910E+00
FE-55	1.350E+08	8.720E+07	2.330E+07	0.000E+00	0.000E+00	4.270E+07	1.110E+07
FE-59	2.250E+08	3.930E+08	1.550E+08	0.000E+00	0.000E+00	1.160E+08	1.880E+08
CO-57	0.000E+00	8.950E+06	1.460E+07	0.000E+00	0.000E+00	0.000E+00	3.050E+07
CO-58	0.000E+00	2.430E+07	6.060E+07	0.000E+00	0.000E+00	0.000E+00	6.050E+07
CO-60	0.000E+00	8.810E+07	2.080E+08	0.000E+00	0.000E+00	0.000E+00	2.100E+08
NI-63	3.490E+10	2.160E+09	1.210E+09	0.000E+00	0.000E+00	0.000E+00	1.070E+08
NI-65	3.510E+00	3.970E-01	1.810E-01	0.000E+00	0.000E+00	0.000E+00	3.020E+01
CU-64	0.000E+00	1.880E+05	8.690E+04	0.000E+00	3.170E+05	0.000E+00	3.850E+06
ZN-65	5.550E+09	1.900E+10	8.780E+09	0.000E+00	9.230E+09	0.000E+00	1.610E+10
ZN-69	0.000E+00	0.000E+00	0.000E+00	0.000E+00	0.000E+00	0.000E+00	7.360E-09
BR-82	0.000E+00	0.000E+00	0.000E+00	0.000E+00	0.000E+00	0.000E+00	0.000E+00
BR-83	0.000E+00	0.000E+00	0.000E+00	0.000E+00	0.000E+00	0.000E+00	0.000E+00
BR-84	0.000E+00	0.000E+00	0.000E+00	0.000E+00	0.000E+00	0.000E+00	0.000E+00
BR-85	0.000E+00	0.000E+00	0.000E+00	0.000E+00	0.000E+00	0.000E+00	0.000E+00
RB-86	0.000E+00	2.220E+10	1.100E+10	0.000E+00	0.000E+00	0.000E+00	5.690E+08
RB-88	0.000E+00	0.000E+00	0.000E+00	0.000E+00	0.000E+00	0.000E+00	0.000E+00
RB-89	0.000E+00	0.000E+00	0.000E+00	0.000E+00	0.000E+00	0.000E+00	0.000E+00
SR-89	1.260E+10	0.000E+00	3.610E+08	0.000E+00	0.000E+00	0.000E+00	2.590E+08
SR-90	1.220E+11	0.000E+00	3.100E+10	0.000E+00	0.000E+00	0.000E+00	1.520E+09
SR-91	2.940E+05	0.000E+00	1.060E+04	0.000E+00	0.000E+00	0.000E+00	3.480E+05
SR-92	4.650E+00	0.000E+00	1.730E-01	0.000E+00	0.000E+00	0.000E+00	5.010E+01
Y-90	6.800E+02	0.000E+00	1.820E+01	0.000E+00	0.000E+00	0.000E+00	9.390E+05
Y-91M	0.000E+00	0.000E+00	0.000E+00	0.000E+00	0.000E+00	0.000E+00	0.000E+00
Y-91	7.330E+04	0.000E+00	1.950E+03	0.000E+00	0.000E+00	0.000E+00	5.260E+06
Y-92	5.220E-04	0.000E+00	1.470E-05	0.000E+00	0.000E+00	0.000E+00	9.970E+00
Y-93	2.250E+00	0.000E+00	6.130E-02	0.000E+00	0.000E+00	0.000E+00	1.780E+04

Attachment 12
Gaseous Effluent Pathway Dose Factors

GRASS-COW-MILK DOSE FACTORS
INFANT
(m^2 *mrem/yr per uCi/sec)

Nuclide	Bone	Liver	Tbody	Thyroid	Kidney	Lung	Gltract
ZR-95	6.830E+03	1.660E+03	1.180E+03	0.000E+00	1.790E+03	0.000E+00	8.280E+05
ZR-97	3.990E+00	6.850E-01	3.130E-01	0.000E+00	6.910E-01	0.000E+00	4.370E+04
NB-95	5.930E+05	2.440E+05	1.410E+05	0.000E+00	1.750E+05	0.000E+00	2.060E+08
NB-97	0.000E+00	0.000E+00	0.000E+00	0.000E+00	0.000E+00	0.000E+00	3.700E-06
MO-99	0.000E+00	2.120E+08	4.130E+07	0.000E+00	3.170E+08	0.000E+00	6.980E+07
TC-99M	2.690E+01	5.550E+01	7.150E+02	0.000E+00	5.970E+02	2.900E+01	1.610E+04
TC-101	0.000E+00	0.000E+00	0.000E+00	0.000E+00	0.000E+00	0.000E+00	0.000E+00
RU-103	8.690E+03	0.000E+00	2.910E+03	0.000E+00	1.810E+04	0.000E+00	1.060E+05
RU-105	8.060E-03	0.000E+00	2.710E-03	0.000E+00	5.920E-02	0.000E+00	3.210E+00
RU-106	1.900E+05	0.000E+00	2.380E+04	0.000E+00	2.250E+05	0.000E+00	1.440E+06
RH-103M	0.000E+00	0.000E+00	0.000E+00	0.000E+00	0.000E+00	0.000E+00	0.000E+00
RH-106	0.000E+00	0.000E+00	0.000E+00	0.000E+00	0.000E+00	0.000E+00	0.000E+00
AG-110M	3.860E+08	2.820E+08	1.860E+08	0.000E+00	4.030E+08	0.000E+00	1.460E+10
SB-122	6.400E+05	6.670E+05	8.080E+06	1.060E+05	3.150E+05	1.370E+05	7.950E+07
SB-124	6.980E+09	1.030E+08	2.160E+09	1.850E+07	0.000E+00	4.370E+09	2.150E+10
SB-125	4.980E+09	4.820E+07	1.020E+09	6.240E+06	0.000E+00	3.130E+09	6.640E+09
TE-125M	1.510E+08	5.040E+07	2.040E+07	5.070E+07	0.000E+00	0.000E+00	7.180E+07
TE-127M	4.210E+08	1.400E+08	5.100E+07	1.220E+08	1.040E+09	0.000E+00	1.700E+08
TE-127	6.500E+03	2.180E+03	1.400E+03	5.290E+03	1.590E+04	0.000E+00	1.360E+05
TE-129M	5.590E+08	1.920E+08	8.620E+07	2.150E+08	1.400E+09	0.000E+00	3.340E+08
TE-129	2.080E-09	0.000E+00	0.000E+00	1.750E-09	5.180E-09	0.000E+00	1.660E-07
TE-131M	3.380E+06	1.360E+06	1.120E+06	2.760E+06	9.350E+06	0.000E+00	2.290E+07
TE-131	0.000E+00	0.000E+00	0.000E+00	0.000E+00	0.000E+00	0.000E+00	0.000E+00
TE-132	2.100E+07	1.040E+07	9.720E+06	1.540E+07	6.510E+07	0.000E+00	3.850E+07
I-130	3.600E+06	7.920E+06	3.180E+06	8.880E+08	8.700E+06	0.000E+00	1.700E+06
I-131	2.720E+09	3.210E+09	1.410E+09	1.050E+12	3.750E+09	0.000E+00	1.150E+08
I-132	1.420E+00	2.890E+00	1.030E+00	1.350E+02	3.220E+00	0.000E+00	2.340E+00
I-133	3.720E+07	5.410E+07	1.580E+07	9.840E+09	6.360E+07	0.000E+00	9.160E+06
I-134	0.000E+00	0.000E+00	0.000E+00	1.010E-09	0.000E+00	0.000E+00	0.000E+00
I-135	1.210E+05	2.410E+05	8.800E+04	2.160E+07	2.690E+05	0.000E+00	8.740E+04
CS-134	3.650E+10	6.800E+10	6.870E+09	0.000E+00	1.750E+10	7.180E+09	1.850E+08
CS-136	1.960E+09	5.770E+09	2.150E+09	0.000E+00	2.300E+09	4.700E+08	8.760E+07
CS-137	5.150E+10	6.020E+10	4.270E+09	0.000E+00	1.620E+10	6.550E+09	1.880E+08
CS-138	0.000E+00	0.000E+00	0.000E+00	0.000E+00	0.000E+00	0.000E+00	0.000E+00

Attachment 12
Gaseous Effluent Pathway Dose Factors

GRASS-COW-MILK DOSE FACTORS
INFANT
(m^2 *mrem/yr per uCi/sec)

Nuclide	Bone	Liver	Tbody	Thyroid	Kidney	Lung	Gitract
BA-139	4.550E-07	0.000E+00	1.320E-08	0.000E+00	0.000E+00	0.000E+00	2.880E-05
BA-140	2.410E+08	2.410E+05	1.240E+07	0.000E+00	5.730E+04	1.480E+05	5.920E+07
BA-141	0.000E+00	0.000E+00	0.000E+00	0.000E+00	0.000E+00	0.000E+00	0.000E+00
BA-142	0.000E+00	0.000E+00	0.000E+00	0.000E+00	0.000E+00	0.000E+00	0.000E+00
LA-140	4.030E+01	1.590E+01	4.090E+00	0.000E+00	0.000E+00	0.000E+00	1.870E+05
LA-142	0.000E+00	0.000E+00	0.000E+00	0.000E+00	0.000E+00	0.000E+00	5.210E-06
CE-141	4.330E+04	2.640E+04	3.110E+03	0.000E+00	8.150E+03	0.000E+00	1.370E+07
CE-143	4.000E+02	2.650E+05	3.020E+01	0.000E+00	7.720E+01	0.000E+00	1.550E+06
CE-144	2.330E+06	9.520E+05	1.300E+05	0.000E+00	3.850E+05	0.000E+00	1.330E+08
PR-143	1.490E+03	5.590E+02	7.410E+01	0.000E+00	2.080E+02	0.000E+00	7.890E+05
PR-144	0.000E+00	0.000E+00	0.000E+00	0.000E+00	0.000E+00	0.000E+00	0.000E+00
ND-147	8.820E+02	9.060E+02	5.550E+01	0.000E+00	3.490E+02	0.000E+00	5.740E+05
EU-154	1.080E+05	1.500E+04	9.010E+03	0.000E+00	4.070E+04	0.000E+00	1.880E+06
EU-155	2.210E+04	2.550E+03	1.320E+03	0.000E+00	5.710E+03	0.000E+00	3.410E+06
W-187	6.120E+04	4.260E+04	1.470E+04	0.000E+00	0.000E+00	0.000E+00	2.500E+06
NP-239	3.640E+01	3.250E+00	1.840E+00	0.000E+00	6.490E+00	0.000E+00	9.400E+04

Attachment 12
Gaseous Effluent Pathway Dose Factors

GRASS-GOAT-MILK DOSE FACTORS
ADULT
(m^2 *mrem/yr per uCi/sec)

Nuclide	Bone	Liver	Tbody	Thyroid	Kidney	Lung	Gltract
H-3	0.000E+00	1.560E+03	1.560E+03	1.560E+03	1.560E+03	1.560E+03	1.560E+03
C-14	3.630E+05	7.260E+04	7.260E+04	7.260E+04	7.260E+04	7.260E+04	7.260E+04
NA-24	3.050E+05	3.050E+05	3.050E+05	3.050E+05	3.050E+05	3.050E+05	3.050E+05
P-32	2.050E+10	1.270E+09	7.930E+08	0.000E+00	0.000E+00	0.000E+00	2.310E+09
CR-51	0.000E+00	0.000E+00	3.430E+03	2.050E+03	7.560E+02	4.560E+03	8.640E+05
MN-54	0.000E+00	1.010E+06	1.920E+05	0.000E+00	3.000E+05	0.000E+00	3.090E+06
MN-56	0.000E+00	5.080E-04	9.010E-05	0.000E+00	6.450E-04	0.000E+00	1.620E-02
FE-55	3.260E+05	2.250E+05	5.260E+04	0.000E+00	0.000E+00	1.260E+05	1.290E+05
FE-59	3.870E+05	9.090E+05	3.490E+05	0.000E+00	0.000E+00	2.540E+05	3.030E+06
CO-57	0.000E+00	1.540E+05	2.550E+05	0.000E+00	0.000E+00	0.000E+00	3.900E+06
CO-58	0.000E+00	5.660E+05	1.270E+06	0.000E+00	0.000E+00	0.000E+00	1.150E+07
CO-60	0.000E+00	1.970E+06	4.340E+06	0.000E+00	0.000E+00	0.000E+00	3.700E+07
NI-63	8.070E+08	5.600E+07	2.710E+07	0.000E+00	0.000E+00	0.000E+00	1.170E+07
NI-65	4.440E-02	5.770E-03	2.630E-03	0.000E+00	0.000E+00	0.000E+00	1.460E-01
CU-64	0.000E+00	2.690E+03	1.260E+03	0.000E+00	6.770E+03	0.000E+00	2.290E+05
ZN-65	1.650E+08	5.240E+08	2.370E+08	0.000E+00	3.500E+08	0.000E+00	3.300E+08
ZN-69	0.000E+00	0.000E+00	0.000E+00	0.000E+00	0.000E+00	0.000E+00	0.000E+00
BR-82	0.000E+00	0.000E+00	3.900E+06	0.000E+00	0.000E+00	0.000E+00	4.470E+06
BR-83	0.000E+00	0.000E+00	1.240E-02	0.000E+00	0.000E+00	0.000E+00	1.790E-02
BR-84	0.000E+00	0.000E+00	0.000E+00	0.000E+00	0.000E+00	0.000E+00	0.000E+00
BR-85	0.000E+00	0.000E+00	0.000E+00	0.000E+00	0.000E+00	0.000E+00	0.000E+00
RB-86	0.000E+00	3.110E+08	1.450E+08	0.000E+00	0.000E+00	0.000E+00	6.140E+07
RB-88	0.000E+00	0.000E+00	0.000E+00	0.000E+00	0.000E+00	0.000E+00	0.000E+00
RB-89	0.000E+00	0.000E+00	0.000E+00	0.000E+00	0.000E+00	0.000E+00	0.000E+00
SR-89	3.050E+09	0.000E+00	8.740E+07	0.000E+00	0.000E+00	0.000E+00	4.890E+08
SR-90	9.830E+10	0.000E+00	2.410E+10	0.000E+00	0.000E+00	0.000E+00	2.840E+09
SR-91	6.580E+04	0.000E+00	2.660E+03	0.000E+00	0.000E+00	0.000E+00	3.130E+05
SR-92	1.030E+00	0.000E+00	4.440E-02	0.000E+00	0.000E+00	0.000E+00	2.030E+01
Y-90	8.480E+00	0.000E+00	2.280E-01	0.000E+00	0.000E+00	0.000E+00	8.990E+04
Y-91M	0.000E+00	0.000E+00	0.000E+00	0.000E+00	0.000E+00	0.000E+00	0.000E+00
Y-91	1.030E+03	0.000E+00	2.760E+01	0.000E+00	0.000E+00	0.000E+00	5.680E+05
Y-92	6.510E-06	0.000E+00	1.900E-07	0.000E+00	0.000E+00	0.000E+00	1.140E-01
Y-93	2.800E-02	0.000E+00	7.720E-04	0.000E+00	0.000E+00	0.000E+00	8.870E+02
ZR-95	1.140E+02	3.640E+01	2.470E+01	0.000E+00	5.710E+01	0.000E+00	1.150E+05

Attachment 12
Gaseous Effluent Pathway Dose Factors

GRASS-GOAT-MILK DOSE FACTORS
ADULT
(m^2 *mrem/yr per uCi/sec)

Nuclide	Bone	Liver	Tbody	Thyroid	Kidney	Lung	Gltract
ZR-97	5.110E-02	1.030E-02	4.710E-03	0.000E+00	1.560E-02	0.000E+00	3.190E+03
NB-95	9.900E+03	5.510E+03	2.960E+03	0.000E+00	5.440E+03	0.000E+00	3.340E+07
NB-97	0.000E+00	0.000E+00	0.000E+00	0.000E+00	0.000E+00	0.000E+00	0.000E+00
MO-99	0.000E+00	3.030E+06	5.760E+05	0.000E+00	6.860E+06	0.000E+00	7.020E+06
TC-99M	3.900E-01	1.100E+00	1.400E+01	0.000E+00	1.670E+01	5.400E-01	6.520E+02
TC-101	0.000E+00	0.000E+00	0.000E+00	0.000E+00	0.000E+00	0.000E+00	0.000E+00
RU-103	1.220E+02	0.000E+00	5.270E+01	0.000E+00	4.670E+02	0.000E+00	1.430E+04
RU-105	1.030E-04	0.000E+00	4.060E-05	0.000E+00	1.330E-03	0.000E+00	6.290E-02
RU-106	2.450E+03	0.000E+00	3.100E+02	0.000E+00	4.730E+03	0.000E+00	1.580E+05
RH-103M	0.000E+00	0.000E+00	0.000E+00	0.000E+00	0.000E+00	0.000E+00	0.000E+00
RH-106	0.000E+00	0.000E+00	0.000E+00	0.000E+00	0.000E+00	0.000E+00	0.000E+00
AG-110M	6.990E+06	6.470E+06	3.840E+06	0.000E+00	1.270E+07	0.000E+00	2.640E+09
SB-122	7.210E+04	7.520E+04	9.110E+05	1.200E+04	3.550E+04	1.550E+04	8.960E+06
SB-124	3.090E+06	5.840E+04	1.220E+06	7.490E+03	0.000E+00	2.410E+06	8.770E+07
SB-125	2.450E+06	2.740E+04	5.840E+05	2.490E+03	0.000E+00	1.890E+06	2.700E+07
TE-125M	1.950E+06	7.080E+05	2.620E+05	5.880E+05	7.950E+06	0.000E+00	7.810E+06
TE-127M	5.490E+06	1.960E+06	6.690E+05	1.400E+06	2.230E+07	0.000E+00	1.840E+07
TE-127	8.060E+01	2.890E+01	1.740E+01	5.970E+01	3.280E+02	0.000E+00	6.360E+03
TE-129M	7.250E+06	2.710E+06	1.150E+06	2.490E+06	3.030E+07	0.000E+00	3.650E+07
TE-129	0.000E+00	0.000E+00	0.000E+00	0.000E+00	0.000E+00	0.000E+00	0.000E+00
TE-131M	4.330E+04	2.120E+04	1.770E+04	3.360E+04	2.150E+05	0.000E+00	2.100E+06
TE-131	0.000E+00	0.000E+00	0.000E+00	0.000E+00	0.000E+00	0.000E+00	0.000E+00
TE-132	2.870E+05	1.860E+05	1.740E+05	2.050E+05	1.790E+06	0.000E+00	8.790E+06
I-130	5.110E+05	1.510E+06	5.950E+05	1.280E+08	2.350E+06	0.000E+00	1.300E+06
I-131	3.560E+08	5.090E+08	2.920E+08	1.670E+11	8.720E+08	0.000E+00	1.340E+08
I-132	1.960E-01	5.250E-01	1.840E-01	1.840E+01	8.360E-01	0.000E+00	9.860E-02
I-133	4.760E+06	8.280E+06	2.520E+06	1.220E+09	1.440E+07	0.000E+00	7.440E+06
I-134	0.000E+00	0.000E+00	0.000E+00	0.000E+00	0.000E+00	0.000E+00	0.000E+00
I-135	1.670E+04	4.360E+04	1.610E+04	2.880E+06	6.990E+04	0.000E+00	4.920E+04
CS-134	1.700E+10	4.030E+10	3.300E+10	0.000E+00	1.310E+10	4.330E+09	7.060E+08
CS-136	7.840E+08	3.090E+09	2.230E+09	0.000E+00	1.720E+09	2.360E+08	3.520E+08
CS-137	2.210E+10	3.030E+10	1.980E+10	0.000E+00	1.030E+10	3.420E+09	5.860E+08
CS-138	0.000E+00	0.000E+00	0.000E+00	0.000E+00	0.000E+00	0.000E+00	0.000E+00

Attachment 12
Gaseous Effluent Pathway Dose Factors

GRASS-GOAT-MILK DOSE FACTORS
ADULT
(m^2 *mrem/yr per uCi/sec)

Nuclide	Bone	Liver	Tbody	Thyroid	Kidney	Lung	Gltract
BA-139	5.640E-09	0.000E+00	0.000E+00	0.000E+00	0.000E+00	0.000E+00	1.000E-08
BA-140	3.230E+06	4.050E+03	2.110E+05	0.000E+00	1.380E+03	2.320E+03	6.650E+06
BA-141	0.000E+00	0.000E+00	0.000E+00	0.000E+00	0.000E+00	0.000E+00	0.000E+00
BA-142	0.000E+00	0.000E+00	0.000E+00	0.000E+00	0.000E+00	0.000E+00	0.000E+00
LA-140	5.380E-01	2.710E-01	1.990E+04	0.000E+00	0.000E+00	0.000E+00	1.990E+04
LA-142	0.000E+00	0.000E+00	0.000E+00	0.000E+00	0.000E+00	0.000E+00	3.640E-09
CE-141	5.810E+02	3.930E+02	4.450E+01	0.000E+00	1.820E+02	0.000E+00	1.500E+06
CE-143	5.020E+00	3.710E+03	4.110E-01	0.000E+00	1.630E+00	0.000E+00	1.390E+05
CE-144	4.290E+04	1.790E+04	2.300E+03	0.000E+00	1.060E+04	0.000E+00	1.450E+07
PR-143	1.910E+01	7.650E+00	9.450E-01	0.000E+00	4.410E+00	0.000E+00	8.350E+04
PR-144	0.000E+00	0.000E+00	0.000E+00	0.000E+00	0.000E+00	0.000E+00	0.000E+00
ND-147	1.130E+01	1.310E+01	7.820E-01	0.000E+00	7.640E+00	0.000E+00	6.270E+04
EU-154	2.840E+03	3.490E+02	2.480E+02	0.000E+00	1.670E+03	0.000E+00	2.530E+05
EU-155	3.950E+02	5.610E+01	3.620E+01	0.000E+00	2.590E+02	0.000E+00	4.410E+04
W-187	7.870E+02	6.580E+02	2.300E+02	0.000E+00	0.000E+00	0.000E+00	2.160E+05
NP-239	4.390E-01	4.320E-02	2.380E-02	0.000E+00	1.350E-01	0.000E+00	8.860E+03

Attachment 12
Gaseous Effluent Pathway Dose Factors

GRASS-GOAT-MILK DOSE FACTORS
TEEN
(m^2 *mrem/yr per uCi/sec)

Nuclide	Bone	Liver	Tbody	Thyroid	Kidney	Lung	Gltract
H-3	0.000E+00	2.030E+03	2.030E+03	2.030E+03	2.030E+03	2.030E+03	2.030E+03
C-14	6.700E+05	1.340E+05	1.340E+05	1.340E+05	1.340E+05	1.340E+05	1.340E+05
NA-24	5.330E+05	5.330E+05	5.330E+05	5.330E+05	5.330E+05	5.330E+05	5.330E+05
P-32	3.780E+10	2.340E+09	1.470E+09	0.000E+00	0.000E+00	0.000E+00	3.180E+09
CR-51	0.000E+00	0.000E+00	6.000E+03	3.330E+03	1.310E+03	8.560E+03	1.010E+06
MN-54	0.000E+00	1.680E+06	3.330E+05	0.000E+00	5.010E+05	0.000E+00	3.440E+06
MN-56	0.000E+00	9.010E-04	1.600E-04	0.000E+00	1.140E-03	0.000E+00	5.930E-02
FE-55	5.790E+05	4.100E+05	9.570E+04	0.000E+00	0.000E+00	2.600E+05	1.780E+05
FE-59	6.750E+05	1.580E+06	6.090E+05	0.000E+00	0.000E+00	4.970E+05	3.730E+06
CO-57	0.000E+00	2.690E+05	4.520E+05	0.000E+00	0.000E+00	0.000E+00	5.030E+06
CO-58	0.000E+00	9.540E+05	2.200E+06	0.000E+00	0.000E+00	0.000E+00	1.310E+07
CO-60	0.000E+00	3.340E+06	7.510E+06	0.000E+00	0.000E+00	0.000E+00	4.350E+07
NI-63	1.420E+09	1.000E+08	4.810E+07	0.000E+00	0.000E+00	0.000E+00	1.590E+07
NI-65	8.130E-02	1.040E-02	4.730E-03	0.000E+00	0.000E+00	0.000E+00	5.640E-01
CU-64	0.000E+00	4.790E+03	2.250E+03	0.000E+00	1.210E+04	0.000E+00	3.710E+05
ZN-65	2.530E+08	8.780E+08	4.090E+08	0.000E+00	5.620E+08	0.000E+00	3.720E+08
ZN-69	0.000E+00	0.000E+00	0.000E+00	0.000E+00	0.000E+00	0.000E+00	0.000E+00
BR-82	0.000E+00	0.000E+00	6.670E+06	0.000E+00	0.000E+00	0.000E+00	0.000E+00
BR-83	0.000E+00	0.000E+00	2.290E-02	0.000E+00	0.000E+00	0.000E+00	0.000E+00
BR-84	0.000E+00	0.000E+00	0.000E+00	0.000E+00	0.000E+00	0.000E+00	0.000E+00
BR-85	0.000E+00	0.000E+00	0.000E+00	0.000E+00	0.000E+00	0.000E+00	0.000E+00
RB-86	0.000E+00	5.670E+08	2.670E+08	0.000E+00	0.000E+00	0.000E+00	8.400E+07
RB-88	0.000E+00	0.000E+00	0.000E+00	0.000E+00	0.000E+00	0.000E+00	0.000E+00
RB-89	0.000E+00	0.000E+00	0.000E+00	0.000E+00	0.000E+00	0.000E+00	0.000E+00
SR-89	5.620E+09	0.000E+00	1.160E+08	0.000E+00	0.000E+00	0.000E+00	6.690E+08
SR-90	1.390E+11	0.000E+00	3.430E+11	0.000E+00	0.000E+00	0.000E+00	3.900E+09
SR-91	1.210E+05	0.000E+00	4.810E+03	0.000E+00	0.000E+00	0.000E+00	5.480E+05
SR-92	1.880E+00	0.000E+00	8.010E-02	0.000E+00	0.000E+00	0.000E+00	4.790E+01
Y-90	1.560E+01	0.000E+00	4.200E-01	0.000E+00	0.000E+00	0.000E+00	1.290E+05
Y-91M	0.000E+00	0.000E+00	0.000E+00	0.000E+00	0.000E+00	0.000E+00	0.000E+00
Y-91	1.900E+03	0.000E+00	5.090E+01	0.000E+00	0.000E+00	0.000E+00	7.780E+05
Y-92	1.200E-05	0.000E+00	3.480E-07	0.000E+00	0.000E+00	0.000E+00	3.300E-01
Y-93	5.160E-02	0.000E+00	1.410E-03	0.000E+00	0.000E+00	0.000E+00	1.580E+03

Attachment 12
Gaseous Effluent Pathway Dose Factors

GRASS-GOAT-MILK DOSE FACTORS
TEEN
(m^2 *mrem/yr per uCi/sec)

Nuclide	Bone	Liver	Tbody	Thyroid	Kidney	Lung	Gltract
ZR-95	1.990E+02	6.260E+01	4.310E+01	0.000E+00	9.200E+01	0.000E+00	1.450E+05
ZR-97	9.300E-02	1.840E-02	8.480E-03	0.000E+00	2.790E-02	0.000E+00	4.980E+03
NB-95	1.690E+04	9.370E+03	5.160E+03	0.000E+00	9.080E+03	0.000E+00	4.010E+07
NB-97	0.000E+00	0.000E+00	0.000E+00	0.000E+00	0.000E+00	0.000E+00	7.610E-09
MO-99	0.000E+00	5.470E+06	1.040E+06	0.000E+00	1.250E+07	0.000E+00	9.800E+06
TC-99M	6.770E-01	1.890E+00	2.450E+01	0.000E+00	2.810E+01	1.050E+00	1.240E+03
TC-101	0.000E+00	0.000E+00	0.000E+00	0.000E+00	0.000E+00	0.000E+00	0.000E+00
RU-103	2.180E+02	0.000E+00	9.310E+01	0.000E+00	7.670E+02	0.000E+00	1.820E+04
RU-105	1.880E-04	0.000E+00	7.290E-05	0.000E+00	2.370E-03	0.000E+00	1.520E-01
RU-106	4.500E+03	0.000E+00	5.670E+02	0.000E+00	8.680E+03	0.000E+00	2.160E+05
RH-103M	0.000E+00	0.000E+00	0.000E+00	0.000E+00	0.000E+00	0.000E+00	0.000E+00
RH-106	0.000E+00	0.000E+00	0.000E+00	0.000E+00	0.000E+00	0.000E+00	0.000E+00
AG-110M	1.160E+07	1.090E+07	6.650E+06	0.000E+00	2.090E+07	0.000E+00	3.070E+09
SB-122	9.310E+04	9.710E+04	1.180E+06	1.540E+04	4.580E+04	2.000E+04	1.160E+07
SB-124	5.510E+06	1.020E+05	2.150E+06	1.250E+04	0.000E+00	4.810E+06	1.110E+08
SB-125	4.380E+06	4.790E+04	1.030E+06	4.190E+03	0.000E+00	3.850E+06	3.410E+07
TE-125M	3.600E+06	1.300E+06	4.820E+05	1.010E+06	0.000E+00	0.000E+00	1.060E+07
TE-127M	1.010E+07	3.590E+06	1.200E+06	2.410E+06	4.100E+07	0.000E+00	2.520E+07
TE-127	1.490E+02	5.290E+01	3.210E+01	1.030E+02	6.050E+02	0.000E+00	1.150E+04
TE-129M	1.330E+07	4.920E+06	2.100E+06	4.280E+06	5.550E+07	0.000E+00	4.980E+07
TE-129	0.000E+00	0.000E+00	0.000E+00	0.000E+00	0.000E+00	0.000E+00	0.000E+00
TE-131M	7.890E+04	3.780E+04	3.150E+04	5.690E+04	3.940E+05	0.000E+00	3.030E+06
TE-131	0.000E+00	0.000E+00	0.000E+00	0.000E+00	0.000E+00	0.000E+00	0.000E+00
TE-132	5.130E+05	3.250E+05	3.060E+05	3.430E+05	3.120E+06	0.000E+00	1.030E+07
I-130	8.990E+05	2.600E+06	1.040E+06	2.120E+08	4.010E+06	0.000E+00	2.000E+06
I-131	6.450E+08	9.030E+08	4.850E+08	2.640E+11	1.560E+09	0.000E+00	1.790E+08
I-132	3.480E-01	9.110E-01	3.270E-01	3.070E+01	1.430E+00	0.000E+00	3.970E-01
I-133	8.690E+06	1.470E+07	4.500E+06	2.060E+09	2.590E+07	0.000E+00	1.120E+07
I-134	0.000E+00	0.000E+00	0.000E+00	0.000E+00	0.000E+00	0.000E+00	0.000E+00
I-135	2.960E+04	7.620E+04	2.820E+04	4.900E+06	1.200E+05	0.000E+00	8.440E+04
CS-134	2.940E+10	6.930E+10	3.210E+10	0.000E+00	2.200E+10	8.410E+09	8.620E+08
CS-136	1.330E+09	5.250E+09	3.530E+09	0.000E+00	2.860E+09	4.510E+08	4.230E+08
CS-137	4.020E+10	5.340E+10	1.860E+10	0.000E+00	1.820E+10	7.060E+09	7.600E+08
CS-138	0.000E+00	0.000E+00	0.000E+00	0.000E+00	0.000E+00	0.000E+00	0.000E+00

Attachment 12
Gaseous Effluent Pathway Dose Factors

GRASS-GOAT-MILK DOSE FACTORS
TEEN
(m^2 *mrem/yr per uCi/sec)

Nuclide	Bone	Liver	Tbody	Thyroid	Kidney	Lung	Gltract
BA-139	1.040E-08	0.000E+00	0.000E+00	0.000E+00	0.000E+00	0.000E+00	9.310E-08
BA-140	5.830E+06	7.140E+03	3.750E+05	0.000E+00	2.420E+03	4.800E+03	8.980E+06
BA-141	0.000E+00	0.000E+00	0.000E+00	0.000E+00	0.000E+00	0.000E+00	0.000E+00
BA-142	0.000E+00	0.000E+00	0.000E+00	0.000E+00	0.000E+00	0.000E+00	0.000E+00
LA-140	9.760E-01	4.750E-01	1.260E-01	0.000E+00	0.000E+00	0.000E+00	2.730E+04
LA-142	1.980E-12	8.780E-13	2.190E-13	0.000E+00	0.000E+00	0.000E+00	2.670E-08
CE-141	1.060E+03	7.110E+02	8.170E+01	0.000E+00	3.350E+02	0.000E+00	2.030E+06
CE-143	9.230E+00	6.720E+03	7.500E-01	0.000E+00	3.010E+00	0.000E+00	2.020E+05
CE-144	7.900E+04	3.270E+04	4.240E+03	0.000E+00	1.950E+04	0.000E+00	1.990E+07
PR-143	3.500E+01	1.400E+01	1.740E+00	0.000E+00	8.130E+00	0.000E+00	1.150E+05
PR-144	0.000E+00	0.000E+00	0.000E+00	0.000E+00	0.000E+00	0.000E+00	0.000E+00
ND-147	2.180E+01	2.370E+01	1.420E+00	0.000E+00	1.390E+01	0.000E+00	8.530E+04
EU-154	4.700E+03	6.070E+02	4.280E+02	0.000E+00	2.720E+03	0.000E+00	3.210E+05
EU-155	1.030E+03	9.970E+01	6.170E+01	0.000E+00	3.900E+02	0.000E+00	5.710E+05
W-187	1.440E+03	1.170E+03	4.110E+02	0.000E+00	0.000E+00	0.000E+00	3.180E+05
NP-239	8.390E-01	7.910E-02	4.390E-02	0.000E+00	2.480E-01	0.000E+00	1.270E+04

Attachment 12
Gaseous Effluent Pathway Dose Factors

GRASS-GOAT-MILK DOSE FACTORS
CHILD
(m^2 *mrem/yr per uCi/sec)

Nuclide	Bone	Liver	Tbody	Thyroid	Kidney	Lung	Gitract
H-3	0.000E+00	3.200E+03	3.200E+03	3.200E+03	3.200E+03	3.200E+03	3.200E+03
C-14	1.650E+06	3.290E+05	3.290E+05	3.290E+05	3.290E+05	3.290E+05	3.290E+05
NA-24	1.110E+06	1.110E+06	1.110E+06	1.110E+06	1.110E+06	1.110E+06	1.110E+06
P-32	9.330E+10	4.370E+09	3.600E+09	0.000E+00	0.000E+00	0.000E+00	2.580E+09
CR-51	0.000E+00	0.000E+00	1.220E+04	6.790E+03	1.860E+03	1.240E+04	6.490E+05
MN-54	0.000E+00	2.510E+06	6.690E+05	0.000E+00	7.050E+05	0.000E+00	2.110E+06
MN-56	0.000E+00	1.570E-03	3.550E-04	0.000E+00	1.900E-03	0.000E+00	2.280E-01
FE-55	1.450E+06	7.700E+05	2.390E+05	0.000E+00	0.000E+00	4.360E+05	1.430E+05
FE-59	1.570E+06	2.530E+06	1.260E+06	0.000E+00	0.000E+00	7.350E+05	2.640E+06
CO-57	0.000E+00	4.600E+05	9.320E+05	0.000E+00	0.000E+00	0.000E+00	3.770E+06
CO-58	0.000E+00	1.460E+06	4.460E+06	0.000E+00	0.000E+00	0.000E+00	8.500E+06
CO-60	0.000E+00	5.180E+06	1.530E+07	0.000E+00	0.000E+00	0.000E+00	2.870E+07
NI-63	3.560E+09	1.900E+08	1.210E+08	0.000E+00	0.000E+00	0.000E+00	1.280E+07
NI-65	1.990E-01	1.870E-02	1.090E-02	0.000E+00	0.000E+00	0.000E+00	2.290E+00
CU-64	0.000E+00	8.410E+03	5.080E+03	0.000E+00	2.030E+04	0.000E+00	3.950E+05
ZN-65	4.960E+08	1.320E+09	8.220E+08	0.000E+00	8.330E+08	0.000E+00	2.320E+08
ZN-69	0.000E+00	0.000E+00	0.000E+00	0.000E+00	0.000E+00	0.000E+00	0.000E+00
BR-82	0.000E+00	0.000E+00	1.390E+07	0.000E+00	0.000E+00	0.000E+00	0.000E+00
BR-83	0.000E+00	0.000E+00	5.620E-02	0.000E+00	0.000E+00	0.000E+00	0.000E+00
BR-84	0.000E+00	0.000E+00	0.000E+00	0.000E+00	0.000E+00	0.000E+00	0.000E+00
BR-85	0.000E+00	0.000E+00	0.000E+00	0.000E+00	0.000E+00	0.000E+00	0.000E+00
RB-86	0.000E+00	1.050E+09	6.470E+08	0.000E+00	0.000E+00	0.000E+00	6.770E+07
RB-88	0.000E+00	0.000E+00	0.000E+00	0.000E+00	0.000E+00	0.000E+00	0.000E+00
RB-89	0.000E+00	0.000E+00	0.000E+00	0.000E+00	0.000E+00	0.000E+00	0.000E+00
SR-89	1.390E+10	0.000E+00	3.970E+08	0.000E+00	0.000E+00	0.000E+00	5.380E+08
SR-90	2.350E+11	0.000E+00	5.950E+10	0.000E+00	0.000E+00	0.000E+00	3.190E+09
SR-91	2.970E+05	0.000E+00	1.120E+04	0.000E+00	0.000E+00	0.000E+00	6.550E+05
SR-92	4.590E+10	0.000E+00	1.840E-01	0.000E+00	0.000E+00	0.000E+00	8.690E+01
Y-90	3.860E+01	0.000E+00	1.030E+00	0.000E+00	0.000E+00	0.000E+00	1.100E+05
Y-91M	0.000E+00	0.000E+00	0.000E+00	0.000E+00	0.000E+00	0.000E+00	0.000E+00
Y-91	4.690E+03	0.000E+00	1.250E+02	0.000E+00	0.000E+00	0.000E+00	6.250E+05
Y-92	2.950E-05	0.000E+00	8.440E-07	0.000E+00	0.000E+00	0.000E+00	8.520E-01
Y-93	1.270E-01	0.000E+00	3.480E-03	0.000E+00	0.000E+00	0.000E+00	1.890E+03
ZR-95	4.610E+02	1.010E+02	9.030E+01	0.000E+00	1.450E+02	0.000E+00	1.060E+05

Attachment 12
Gaseous Effluent Pathway Dose Factors

GRASS-GOAT-MILK DOSE FACTORS
CHILD
(m^2 *mrem/yr per uCi/sec)

Nuclide	Bone	Liver	Tbody	Thyroid	Kidney	Lung	Gltract
ZR-97	2.260E-01	3.270E-02	1.930E-02	0.000E+00	4.690E-02	0.000E+00	4.950E+03
NB-95	3.810E+04	1.480E+04	1.060E+04	0.000E+00	1.390E+04	0.000E+00	2.750E+07
NB-97	0.000E+00	0.000E+00	0.000E+00	0.000E+00	0.000E+00	0.000E+00	1.740E-07
MO-99	0.000E+00	9.950E+06	2.460E+06	0.000E+00	2.120E+07	0.000E+00	8.230E+06
TC-99M	1.550E+00	3.040E+00	5.040E+01	0.000E+00	4.420E+01	1.550E+00	1.730E+03
TC-101	0.000E+00	0.000E+00	0.000E+00	0.000E+00	0.000E+00	0.000E+00	0.000E+00
RU-103	5.150E+02	0.000E+00	1.980E+02	0.000E+00	1.300E+03	0.000E+00	1.330E+04
RU-105	4.590E-04	0.000E+00	1.660E-04	0.000E+00	4.030E-03	0.000E+00	2.990E-01
RU-106	1.110E+04	0.000E+00	1.380E+03	0.000E+00	1.500E+04	0.000E+00	1.720E+05
RH-103M	0.000E+00	0.000E+00	0.000E+00	0.000E+00	0.000E+00	0.000E+00	0.000E+00
RH-106	0.000E+00	0.000E+00	0.000E+00	0.000E+00	0.000E+00	0.000E+00	0.000E+00
AG-110M	2.510E+07	1.690E+07	1.350E+07	0.000E+00	3.150E+07	0.000E+00	2.010E+09
SB-122	7.680E+04	8.010E+04	9.700E+05	1.270E+04	3.780E+04	1.650E+04	9.540E+06
SB-124	1.300E+07	1.690E+05	4.570E+06	2.880E+04	0.000E+00	7.240E+06	8.150E+07
SB-125	1.040E+07	8.050E+04	2.190E+06	9.670E+03	0.000E+00	5.820E+06	2.490E+07
TE-125M	8.850E+06	2.400E+06	1.180E+06	2.480E+06	0.000E+00	0.000E+00	8.540E+06
TE-127M	2.500E+07	6.720E+06	2.960E+06	5.970E+06	7.120E+07	0.000E+00	2.020E+07
TE-127	3.670E+02	9.910E+01	7.880E+01	2.540E+02	1.050E+03	0.000E+00	1.440E+04
TE-129M	3.270E+07	9.130E+06	5.080E+06	1.050E+07	9.600E+07	0.000E+00	3.990E+07
TE-129	0.000E+00	0.000E+00	0.000E+00	0.000E+00	0.000E+00	0.000E+00	7.340E-09
TE-131M	1.920E+05	6.640E+04	7.070E+04	1.370E+05	6.430E+05	0.000E+00	2.690E+06
TE-131	0.000E+00	0.000E+00	0.000E+00	0.000E+00	0.000E+00	0.000E+00	0.000E+00
TE-132	1.230E+06	5.420E+05	6.550E+05	7.900E+05	5.040E+06	0.000E+00	5.460E+06
I-130	2.100E+06	4.250E+06	2.190E+06	4.680E+08	6.350E+06	0.000E+00	1.990E+06
I-131	1.570E+09	1.570E+09	8.950E+08	5.210E+11	2.580E+09	0.000E+00	1.400E+08
I-132	8.230E-01	1.510E+00	6.960E-01	7.020E+01	2.320E+00	0.000E+00	1.780E+00
I-133	2.110E+07	2.610E+07	9.880E+06	4.850E+09	4.350E+07	0.000E+00	1.050E+07
I-134	0.000E+00	0.000E+00	0.000E+00	0.000E+00	0.000E+00	0.000E+00	0.000E+00
I-135	7.000E+04	1.260E+05	5.960E+04	1.120E+07	1.930E+05	0.000E+00	9.600E+04
CS-134	6.790E+10	1.110E+11	2.350E+10	0.000E+00	3.450E+10	1.240E+10	6.010E+08
CS-136	3.010E+09	8.280E+09	5.360E+09	0.000E+00	4.410E+09	6.580E+08	2.910E+08
CS-137	9.670E+10	9.260E+10	1.370E+10	0.000E+00	3.020E+10	1.090E+10	5.800E+08
CS-138	0.000E+00	0.000E+00	0.000E+00	0.000E+00	0.000E+00	0.000E+00	0.000E+00

Attachment 12
Gaseous Effluent Pathway Dose Factors

GRASS-GOAT-MILK DOSE FACTORS
CHILD
(m^2 *mrem/yr per uCi/sec)

Nuclide	Bone	Liver	Tbody	Thyroid	Kidney	Lung	Gitract
BA-139	2.560E-08	0.000E+00	0.000E+00	0.000E+00	0.000E+00	0.000E+00	1.480E-06
BA-140	1.410E+07	1.230E+04	8.210E+05	0.000E+00	4.010E+03	7.340E+03	7.120E+06
BA-141	0.000E+00	0.000E+00	0.000E+00	0.000E+00	0.000E+00	0.000E+00	0.000E+00
BA-142	0.000E+00	0.000E+00	0.000E+00	0.000E+00	0.000E+00	0.000E+00	0.000E+00
LA-140	2.310E+00	8.090E-01	2.730E-01	0.000E+00	0.000E+00	0.000E+00	2.260E+04
LA-142	4.770E-12	1.520E-12	4.770E-13	0.000E+00	0.000E+00	0.000E+00	3.020E-07
CE-141	2.620E+03	1.310E+03	1.940E+02	0.000E+00	5.730E+02	0.000E+00	1.630E+06
CE-143	2.270E+01	1.230E+04	1.780E+00	0.000E+00	5.150E+00	0.000E+00	1.800E+05
CE-144	1.950E+05	6.100E+04	1.040E+04	0.000E+00	3.380E+04	0.000E+00	1.590E+07
PR-143	8.670E+01	2.600E+01	4.300E+00	0.000E+00	1.410E+01	0.000E+00	9.350E+04
PR-144	0.000E+00	0.000E+00	0.000E+00	0.000E+00	0.000E+00	0.000E+00	0.000E+00
ND-147	5.340E+01	4.320E+01	3.350E+00	0.000E+00	2.370E+01	0.000E+00	6.850E+04
EU-154	1.130E+04	1.020E+03	9.290E+02	0.000E+00	4.470E+03	0.000E+00	2.360E+05
EU-155	2.360E+03	1.700E+02	1.330E+02	0.000E+00	6.630E+02	0.000E+00	4.250E+05
W-187	3.490E+03	2.070E+03	9.270E+02	0.000E+00	0.000E+00	0.000E+00	2.900E+05
NP-239	2.060E+00	1.480E-01	1.040E-01	0.000E+00	4.280E-01	0.000E+00	1.100E+04

Attachment 12
Gaseous Effluent Pathway Dose Factors

GRASS-GOAT-MILK DOSE FACTORS
INFANT
(m^2 *mrem/yr per uCi/sec)

Nuclide	Bone	Liver	Tbody	Thyroid	Kidney	Lung	Gitract
H-3	0.000E+00	4.860E+03	4.860E+03	4.860E+03	4.860E+03	4.860E+03	4.860E+03
C-14	3.230E+06	6.890E+05	6.890E+05	6.890E+05	6.890E+05	6.890E+05	6.890E+05
NA-24	1.930E+06	1.930E+06	1.930E+06	1.930E+06	1.930E+06	1.930E+06	1.930E+06
P-32	1.920E+11	1.130E+10	7.450E+09	0.000E+00	0.000E+00	0.000E+00	2.600E+09
CR-51	0.000E+00	0.000E+00	1.940E+04	1.260E+04	2.760E+03	2.460E+04	5.650E+05
MN-54	0.000E+00	4.670E+06	1.060E+06	0.000E+00	1.040E+06	0.000E+00	1.720E+06
MN-56	0.000E+00	3.850E-03	6.630E-04	0.000E+00	3.310E-03	0.000E+00	3.490E-01
FE-55	1.760E+06	1.130E+06	3.030E+05	0.000E+00	0.000E+00	5.540E+05	1.440E+05
FE-59	2.920E+06	5.110E+06	2.010E+06	0.000E+00	0.000E+00	1.510E+06	2.440E+06
CO-57	0.000E+00	1.070E+06	1.750E+06	0.000E+00	0.000E+00	0.000E+00	3.660E+06
CO-58	0.000E+00	2.910E+06	7.270E+06	0.000E+00	0.000E+00	0.000E+00	7.260E+06
CO-60	0.000E+00	1.060E+07	2.500E+07	0.000E+00	0.000E+00	0.000E+00	2.520E+07
NI-63	4.190E+09	2.590E+08	1.450E+08	0.000E+00	0.000E+00	0.000E+00	1.290E+07
NI-65	4.210E-01	4.770E-02	2.170E-02	0.000E+00	0.000E+00	0.000E+00	3.630E+00
CU-64	0.000E+00	2.090E+04	9.680E+03	0.000E+00	3.540E+04	0.000E+00	4.290E+05
ZN-65	6.660E+08	2.280E+09	1.050E+09	0.000E+00	1.110E+09	0.000E+00	1.930E+09
ZN-69	0.000E+00	0.000E+00	0.000E+00	0.000E+00	0.000E+00	0.000E+00	0.000E+00
BR-82	0.000E+00	0.000E+00	2.330E+07	0.000E+00	0.000E+00	0.000E+00	0.000E+00
BR-83	0.000E+00	0.000E+00	1.190E-01	0.000E+00	0.000E+00	0.000E+00	0.000E+00
BR-84	0.000E+00	0.000E+00	0.000E+00	0.000E+00	0.000E+00	0.000E+00	0.000E+00
BR-85	0.000E+00	0.000E+00	0.000E+00	0.000E+00	0.000E+00	0.000E+00	0.000E+00
RB-86	0.000E+00	2.670E+09	1.320E+09	0.000E+00	0.000E+00	0.000E+00	6.830E+07
RB-88	0.000E+00	0.000E+00	0.000E+00	0.000E+00	0.000E+00	0.000E+00	0.000E+00
RB-89	0.000E+00	0.000E+00	0.000E+00	0.000E+00	0.000E+00	0.000E+00	0.000E+00
SR-89	2.640E+10	0.000E+00	7.580E+08	0.000E+00	0.000E+00	0.000E+00	5.430E+08
SR-90	2.550E+11	0.000E+00	6.500E+10	0.000E+00	0.000E+00	0.000E+00	3.190E+09
SR-91	6.180E+05	0.000E+00	2.240E+04	0.000E+00	0.000E+00	0.000E+00	7.310E+05
SR-92	9.760E+00	0.000E+00	3.620E-01	0.000E+00	0.000E+00	0.000E+00	1.050E+02
Y-90	8.160E+01	0.000E+00	2.190E+00	0.000E+00	0.000E+00	0.000E+00	1.130E+05
Y-91M	0.000E+00	0.000E+00	0.000E+00	0.000E+00	0.000E+00	0.000E+00	0.000E+00
Y-91	8.800E+03	0.000E+00	2.340E+02	0.000E+00	0.000E+00	0.000E+00	6.310E+05
Y-92	6.270E-05	0.000E+00	1.760E-06	0.000E+00	0.000E+00	0.000E+00	1.200E+10
Y-93	2.700E-01	0.000E+00	7.350E-03	0.000E+00	0.000E+00	0.000E+00	2.130E+03
ZR-95	8.190E+02	2.000E+02	1.420E+02	0.000E+00	2.150E+02	0.000E+00	9.940E+00

Attachment 12
Gaseous Effluent Pathway Dose Factors

GRASS-GOAT-MILK DOSE FACTORS
INFANT
(m^2 *mrem/yr per uCi/sec)

Nuclide	Bone	Liver	Tbody	Thyroid	Kidney	Lung	Gltract
ZR-97	4.790E-01	8.220E-02	3.760E-02	0.000E+00	8.290E-02	0.000E+00	5.240E+03
NB-95	7.120E+04	2.930E+04	1.690E+04	0.000E+00	2.100E+04	0.000E+00	2.470E+07
NB-97	6.590E-12	1.410E-12	5.070E-13	0.000E+00	1.100E-12	0.000E+00	4.440E-07
MO-99	0.000E+00	2.540E+07	4.960E+06	0.000E+00	3.800E+07	0.000E+00	8.830E+06
TC-99M	3.230E+00	6.660E+00	8.570E+01	0.000E+00	7.160E+01	3.480E+00	1.930E+03
TC-101	0.000E+00	0.000E+00	0.000E+00	0.000E+00	0.000E+00	0.000E+00	0.000E+00
RU-103	1.040E+03	0.000E+00	3.490E+02	0.000E+00	2.170E+03	0.000E+00	1.270E+04
RU-105	9.670E-04	0.000E+00	3.260E-04	0.000E+00	7.110E-03	0.000E+00	3.850E-01
RU-106	2.280E+04	0.000E+00	2.850E+03	0.000E+00	2.700E+04	0.000E+00	1.730E+05
RH-103M	0.000E+00	0.000E+00	0.000E+00	0.000E+00	0.000E+00	0.000E+00	0.000E+00
RH-106	0.000E+00	0.000E+00	0.000E+00	0.000E+00	0.000E+00	0.000E+00	0.000E+00
AG-110M	4.630E+07	3.380E+07	2.240E+07	0.000E+00	4.840E+07	0.000E+00	1.750E+09
SB-122	7.680E+04	8.010E+04	9.700E+05	1.270E+04	3.780E+04	1.650E+04	9.540E+06
SB-124	2.510E+07	3.700E+05	7.790E+06	6.670E+04	0.000E+00	1.570E+07	7.750E+07
SB-125	1.790E+07	1.740E+05	3.690E+06	2.250E+04	0.000E+00	1.130E+07	2.390E+07
TE-125M	1.810E+07	6.050E+06	2.450E+06	6.090E+06	0.000E+00	0.000E+00	8.620E+06
TE-127M	5.050E+07	1.680E+07	6.120E+06	1.460E+07	1.240E+08	0.000E+00	2.040E+07
TE-127	7.800E+02	2.610E+02	1.680E+02	6.350E+02	1.900E+03	0.000E+00	1.640E+04
TE-129M	6.710E+07	2.300E+07	1.030E+07	2.580E+07	1.680E+08	0.000E+00	4.010E+07
TE-129	0.000E+00	0.000E+00	0.000E+00	0.000E+00	0.000E+00	0.000E+00	2.000E-08
TE-131M	4.050E+05	1.630E+05	1.350E+05	3.310E+00	1.120E+06	0.000E+00	2.750E+06
TE-131	0.000E+00	0.000E+00	0.000E+00	0.000E+00	0.000E+00	0.000E+00	0.000E+00
TE-132	2.520E+06	1.250E+06	1.170E+06	1.840E+06	7.820E+06	0.000E+00	4.620E+06
I-130	4.320E+06	9.510E+06	3.820E+06	1.070E+09	1.040E+07	0.000E+00	2.040E+06
I-131	3.270E+09	3.850E+09	1.690E+09	1.270E+12	4.500E+09	0.000E+00	1.370E+08
I-132	1.710E+00	3.470E+00	1.230E+00	1.630E+02	3.870E+00	0.000E+00	2.810E+00
I-133	4.460E+07	6.490E+07	1.900E+07	1.180E+10	7.630E+07	0.000E+00	1.100E+07
I-134	0.000E+00	0.000E+00	0.000E+00	1.210E-09	0.000E+00	0.000E+00	0.000E+00
I-135	1.460E+05	2.900E+05	1.060E+05	2.600E+07	3.230E+05	0.000E+00	1.050E+05
CS-134	1.090E+11	2.040E+11	2.060E+10	0.000E+00	5.250E+10	2.150E+10	5.540E+08
CS-136	5.880E+09	1.730E+10	6.460E+09	0.000E+00	6.900E+09	1.410E+09	2.630E+08
CS-137	1.540E+11	1.810E+11	1.280E+10	0.000E+00	4.850E+10	1.960E+10	5.650E+08
CS-138	0.000E+00	0.000E+00	0.000E+00	0.000E+00	0.000E+00	0.000E+00	0.000E+00

Attachment 12
Gaseous Effluent Pathway Dose Factors

GRASS-GOAT-MILK DOSE FACTORS
INFANT
(m^2 *mrem/yr per uCi/sec)

Nuclide	Bone	Liver	Tbody	Thyroid	Kidney	Lung	Gitract
BA-139	5.450E-08	0.000E+00	1.580E-09	0.000E+00	0.000E+00	0.000E+00	3.450E-06
BA-140	2.890E+07	2.890E+04	1.490E+06	0.000E+00	6.870E+03	1.780E+04	7.110E+06
BA-141	0.000E+00	0.000E+00	0.000E+00	0.000E+00	0.000E+00	0.000E+00	0.000E+00
BA-142	0.000E+00	0.000E+00	0.000E+00	0.000E+00	0.000E+00	0.000E+00	0.000E+00
LA-140	4.840E+00	1.910E+00	4.900E-01	0.000E+00	0.000E+00	0.000E+00	2.240E+04
LA-142	0.000E+00	0.000E+00	0.000E+00	0.000E+00	0.000E+00	0.000E+00	0.000E+00
CE-141	5.200E+03	3.170E+03	3.730E+02	0.000E+00	9.780E+02	0.000E+00	1.640E+06
CE-143	4.800E+01	3.180E+04	3.630E+00	0.000E+00	9.270E+00	0.000E+00	1.860E+05
CE-144	2.790E+05	1.140E+05	1.560E+04	0.000E+00	4.620E+04	0.000E+00	1.600E+07
PR-143	1.790E+02	6.710E+01	8.890E+00	0.000E+00	2.490E+01	0.000E+00	9.470E+04
PR-144	0.000E+00	0.000E+00	0.000E+00	0.000E+00	0.000E+00	0.000E+00	0.000E+00
ND-147	1.060E+02	1.090E+02	6.660E+00	0.000E+00	4.190E+01	0.000E+00	6.890E+04
EU-154	1.300E+04	1.800E+03	1.080E+03	0.000E+00	4.890E+03	0.000E+00	2.250E+05
EU-155	2.650E+03	3.060E+02	1.580E+02	0.000E+00	6.850E+02	0.000E+00	4.100E+05
W-187	7.350E+03	5.110E+03	1.770E+03	0.000E+00	0.000E+00	0.000E+00	3.000E+05
NP-239	4.360E+00	3.900E-01	2.210E-01	0.000E+00	7.780E-01	0.000E+00	1.130E+04

Attachment 13
Environmental Monitoring Sites for REMP

SAMPLE SITE	SECTOR	DISTANCE[1] km	DISTANCE[1] mi	DESCRIPTION
DR1	NW	0.6	0.4	Onsite, Along Cliffs
DR2	WNW	2.7	1.7	Rt. 765, Auto Dump
DR3	W	2.3	1.4	Rt. 765, Giovanni's Tavern (Knotty Pine)
DR4	WSW	2.0	1.2	Rt. 765, Across from White Sand Drive
DR5	SW	2.4	1.5	Rt. 765 at Johns Creek
DR6, A4	SSW	2.9	1.8	Rt. 765 at Lusby, Frank's Garage
DR7, A1, Ib4, Ib5, Ib6	S	0.7	0.5	Onsite, before entrance to Camp Conoy
DR8, A2	SSE	2.5	1.5	Camp Conoy Road at Emergency Siren
DR9, A3	SE	2.6	1.6	Bay Breeze Road
DR10	NW	6.4	4.0	Calvert Beach Rd & Decatur St
DR11	WNW	6.6	4.1	Dirt Road off Mackall Rd & Parran Rd
DR12	W	6.7	4.2	Bowen Rd & Mackall Rd
DR13	WSW	6.1	3.8	Mackall Rd near Wallville
DR14	SW	6.4	4.0	Rodney Point
DR15	SSW	6.2	3.9	Mill Bridge Rd & Turner Rd
DR16	S	6.5	4.1	Across from Appeal School
DR17	SSE	5.9	3.7	Cove Point Rd & Little Cove Point Rd
DR18	SE	7.1	4.5	Cove Point
DR19	NW	4.4	2.8	Long Beach
DR20	NNW	0.4	0.3	Onsite, near shore
DR21, A5, Ib7, Ib8, Ib9	WNW	19.3	12.1	Emergency Operations Facility
DR22	S	12.5	7.8	Solomons Island
DR23	ENE	12.6	7.9	Taylors Island, Carpenter's Property
Wa1	NNE	0.2	0.1	Intake Area
Wa2, Ia1, Ia2	N	0.3	0.2	Discharge Area
Wb1	ESE	0.6	0.4	Shoreline at Barge Road
Ib1, Ib2, Ib3,	SSE	2.6	1.6	Garden Plot off Bay Breeze Rd
Ia4, Ia5	(Area not influenced by Plant Discharge)			Patuxent River
Ia3	E	0.9	0.6	Camp Conoy
Ia6	NNW	10.7	6.7	Kenwood Beach

[1] Distance and direction from the central point of the two containment buildings.

Attachment 14
Radiological Environmental Monitoring Program
Surveillances for Direct Radiation

PARAMETER	UNITS	FREQUENCY	LLD	ACTION LEVEL
GAMMA DOSE[1]	mR	at least quarterly	[2]	N/A

(1) Each sample point shall be monitored using two or more dosimeters **OR** one instrument for measuring and recording dose rate continuously.

(2) LLD for TLDs used for environmental measurements shall be in accordance with the recommendations of Regulatory Guide 4.13.

Attachment 15
Radiological Environmental Monitoring Program
Surveillances for Airborne Activity

RADIOIODINE CANNISTER

PARAMETER	UNITS	FREQUENCY	LLD	ACTION LEVEL (5)
I-131	pCi/m^3	at least weekly	0.07	0.9

PARTICULATE FILTER (1)

PARAMETER	UNITS	FREQUENCY	LLD	ACTION LEVEL (5)
Gross Beta Activity	pCi/m^3	at least weekly (2)	0.01	N/A (3)
Cs-134	pCi/m^3	at least quarterly (4)	0.05	10.0
Cs-137	pCi/m^3	at least quarterly (4)	0.06	20.0

(1) All samples consist of continuous sampler operation with sample collection weekly, or more frequently if required by dust loading.

(2) Analyze for gross beta activity 24 hours or more after sampling to allow for radon and thoron daughter decay.

(3) Although there is not an **ACTION** Level for gross beta activity, if this parameter is greater than ten times the yearly mean of the control sample, perform **GAMMA ISOTOPIC ANALYSIS** on the individual sample.

(4) Perform a **GAMMA ISOTOPIC ANALYSIS** of a quarterly **COMPOSITE SAMPLE**. A separate **COMPOSITE SAMPLE** shall be prepared for each sample location, A1 thru A5. Each **COMPOSITE SAMPLE** shall be a prepared from individual particulate filter samples collected during the applicable calendar quarter and from a single location.

(5) If an **ACTION** Level is exceeded, check the initiating conditions listed in Radiological Environmental Monitoring Program section 5.c and Radiological Environmental Monitoring Program section 5.d, and perform the corrective actions specified in Radiological Environmental Monitoring Program section 7.d and/or Radiological Environmental Monitoring Program section 7.e.

Attachment 16
Radiological Environmental Monitoring Program
Surveillances for Waterborne Activity

SURFACE WATER SAMPLE (1)

PARAMETER	UNITS	FREQUENCY	LLD	**ACTION** LEVEL (2)
H-3	pCi/l	at least quarterly	2000(3)	20,000(4)
Mn-54	pCi/l	at least monthly	15	1000
Fe-59	pCi/l	at least monthly	30	400
Co-58	pCi/l	at least monthly	15	1000
Co-60	pCi/l	at least monthly	15	300
Zn-65	pCi/l	at least monthly	30	300
Zr-95 / Nb-95	pCi/l	at least monthly	15	400
I-131	pCi/l	at least monthly	1(5)	2
Cs-134	pCi/l	at least monthly	15	30
Cs-137	pCi/l	at least monthly	18	50
Ba-140 / La-140	pCi/l	at least monthly	15	200

SHORELINE SEDIMENT SAMPLE

PARAMETER	UNITS	FREQUENCY	LLD	**ACTION** LEVEL (2)
Cs-134	pCi/kg, dry	at least semiannually	150	N/A
Cs-137	pCi/kg, dry	at least semiannually	180	N/A

(1) The water sample shall be a composite of individual samples collected over a 1 month period.
(2) If an **ACTION** Level is exceeded, check the initiating conditions listed in sections REMP SECTION 5.c and REMP SECTION 5.d, and perform the corrective actions specified in section REMP SECTION 7.d and/or REMP SECTION 7.e.
(3) If a drinking water pathway does not exist, a value of 3000 pCi/l may be used.
(4) If a drinking water pathway does not exist, a value of 30,000 pCi/l may be used.
(5) LLD for drinking water samples. If no drinking water pathway exists, the LLD of the gamma isotopic analysis may be used.

Attachment 17
Radiological Environmental Monitoring Program
Surveillances for Ingestible Activity

FISH AND INVERTEBRATES [1]

PARAMETER	UNITS	FREQUENCY	LLD	**ACTION** LEVEL [5]
Mn-54	pCi/kg, wet	[2]	130	30,000
Fe-59	pCi/kg, wet	[2]	260	10,000
Co-58	pCi/kg, wet	[2]	130	30,000
Co-60	pCi/kg, wet	[2]	130	10,000
Zn-65	pCi/kg, wet	[2]	260	20,000
Cs-134	pCi/kg, wet	[2]	130	1000
Cs-137	pCi/kg, wet	[2]	150	2000

MILK

PARAMETER	UNITS	FREQUENCY	LLD	**ACTION** LEVEL [5]
I-131	pCi/l, wet	at least monthly [4]	1	3
Cs-134	pCi/l, wet	at least monthly [4]	15	60
Cs-137	pCi/l, wet	at least monthly [4]	18	70
Ba-140 / La-140	pCi/l, wet	at least monthly [4]	15	300

FOOD PRODUCTS

PARAMETER	UNITS	FREQUENCY	LLD	**ACTION** LEVEL [5]
I-131	pCi/kg, wet	at least monthly[3]	60	100
Cs-134	pCi/kg, wet	at least monthly[3]	60	1000
Cs-137	pCi/kg, wet	at least monthly[3]	80	2000

(1) Edible portions of the fish and invertebrates shall be used for analysis.
(2) The fish and invertebrates shall be sampled at least once per year in season, or semiannually if they are not seasonal.
(3) The food products shall be sampled during the growing season.
(4) The milk samples need be collected and analyzed only if the milk is commercially available in quantities greater than 310 liters per year (see NUREG-0133, 5.3.1.1).
(5) If an **ACTION** Level is exceeded, check the initiating conditions listed in Radiological Environmental Monitoring Program section 5.c and Radiological Environmental Monitoring Program section 5.d, and perform the corrective actions specified in Radiological Environmental Monitoring Program section 7.d and/or Radiological Environmental Monitoring Program section 7.e.

Attachment 18
Map of Environmental Monitoring Sites for REMP (5 Km Radius)

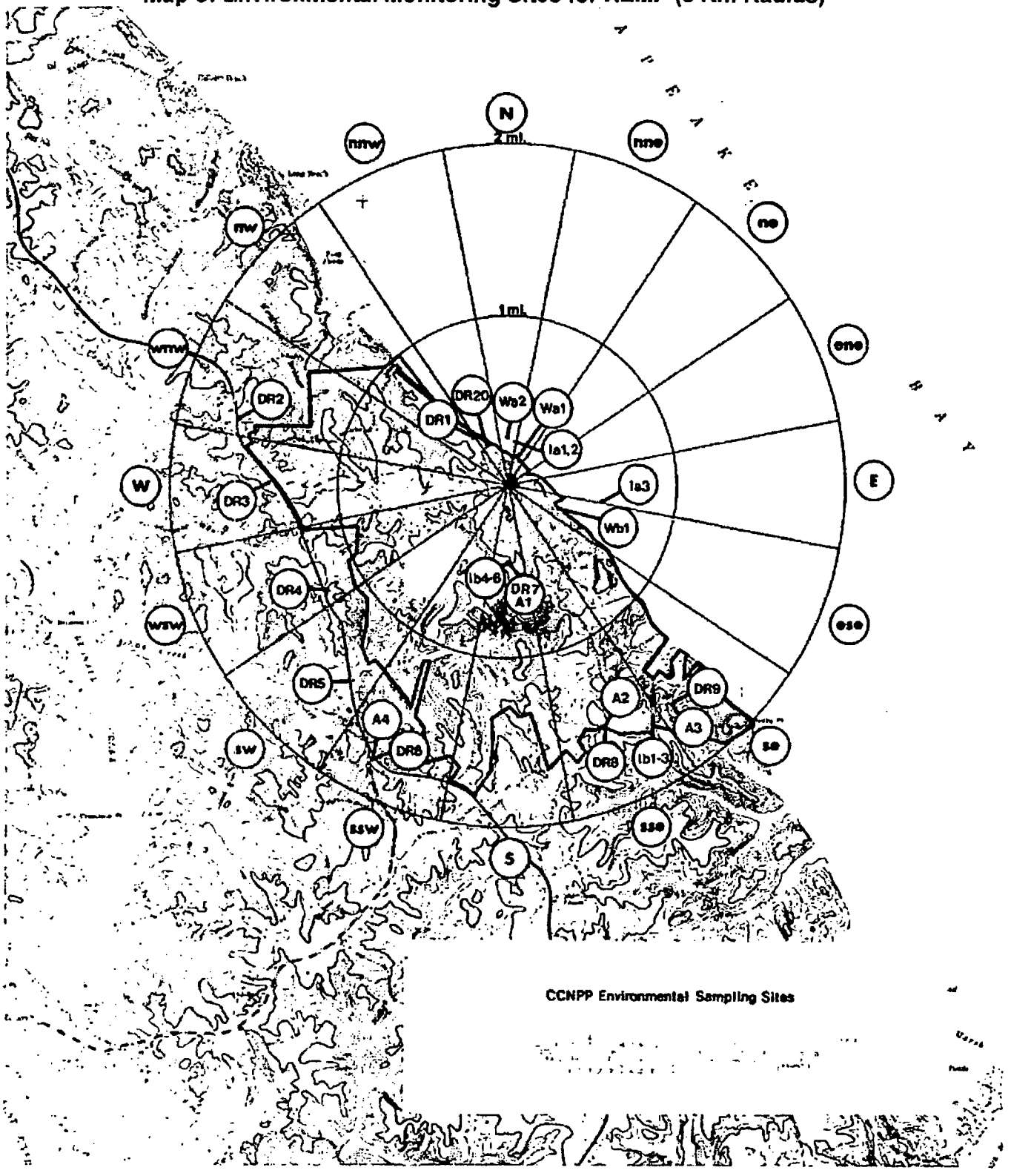

Attachment 19
Map of Environmental Monitoring Sites for REMP (10 Mile Radius)

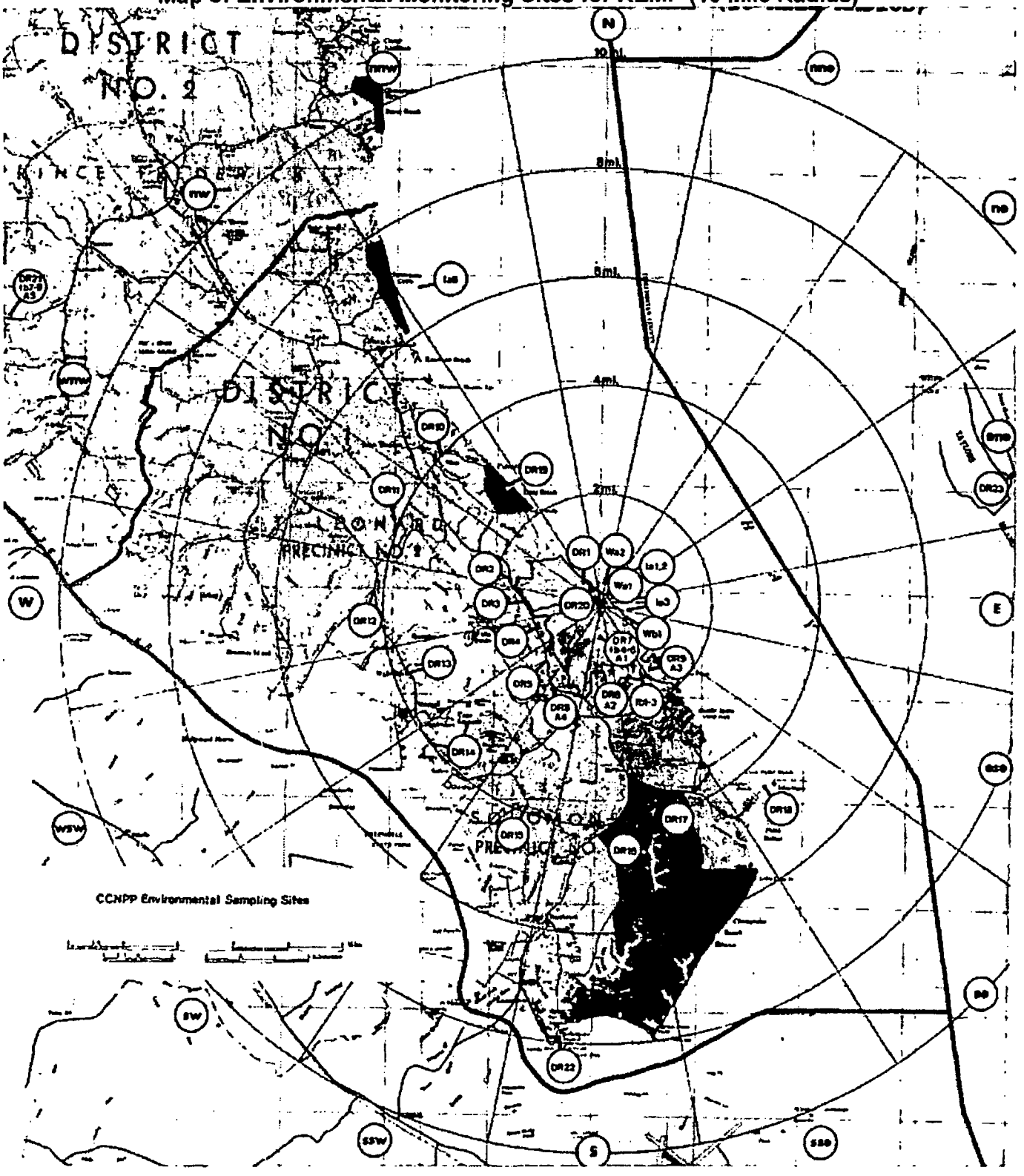

Attachment 20
Environmental Monitoring Sites for ISFSI

STATION	DESCRIPTION	DISTANCE[1] (Kilometers)	DIRECTION[1] (Sector)	
AIR SAMPLERS				
A1[2]	On Site Before Entrance to Camp Conoy	0.3	ESE	
SFA1	Meteorological Station	0.3	NW	
SFA2	CCNPP Visitor's Center	0.8	N	
SFA3	North Northwest of ISFSI	0.1	NNW	May 2004
SFA4	SSE of ISFSI	0.1	SSE	
TLD LOCATIONS				
SFDR1	Southwest of ISFSI	0.2	SW	
SFDR2	North of ISFSI	0.2	N	
SFDR3	North of ISFSI	0.1	N	May 2004
SFDR4	Northeast of ISFSI	<0.1	NE	
SFDR5	East of ISFSI	<0.1	E	
SFDR6	East Southeast of ISFSI	0.1	ESE	
SFDR7	CCNPP Visitor's Center	0.8	N	
SFDR8	North Northwest of ISFSI	0.1	NNW	
SFDR9	SSE of ISFSI	0.1	SSE	May 2004
SFDR10	Northwest of ISFSI	0.1	NW	
SFDR11	West Northwest of ISFSI	0.1	WNW	
SFDR12	WSW of ISFSI	<0.1	WSW	May 2004
SFDR13	South of ISFSI	<0.1	S	
SFDR14	Southeast of ISFSI	0.1	SE	
SFDR15	East Northeast of ISFSI	<0.1	ENE	May 2004
SFDR16	Southwest of ISFSI	<0.1	SW	
DR7[2]	On Site Before Entrance to Camp Conoy	0.3	ESE	
DR30	Meteorological Station	0.3	NW	
SFDR17	NNE OF ISFSI	0.1	NNE	May 2004
SFDR18	West OF ISFSI	0.04	W	
VEGETATION				
SFb1	Meteorological Station	0.3	NW	
SFb2	CCNPP Visitor's Center	0.8	N	
SFb3	North Northwest of ISFSI	0.1	NNW	May 2004
SFb4	SSEof ISFSI	0.1	SSE	
SFb5	On Site Before Entrance to Camp Conoy	0.3	ESE	
SOIL				
SFS1	Meteorological Station	0.3	NW	
SFS2	CCNPP Visitor's Center	0.8	N	
SFS3	North Northwest of ISFSI	0.1	NNW	May 2004
SFS4	SSE of ISFSI	0.1	SSE	
SFS5	On Site Before Entrance to Camp Conoy	0.3	ESE	

[1] Distance and direction from the Central Point of the ISFSI.
[2] Common to both the REMP and the ISFSIMP.

Attachment 21
Map of Environmental Monitoring Sites for ISFSI

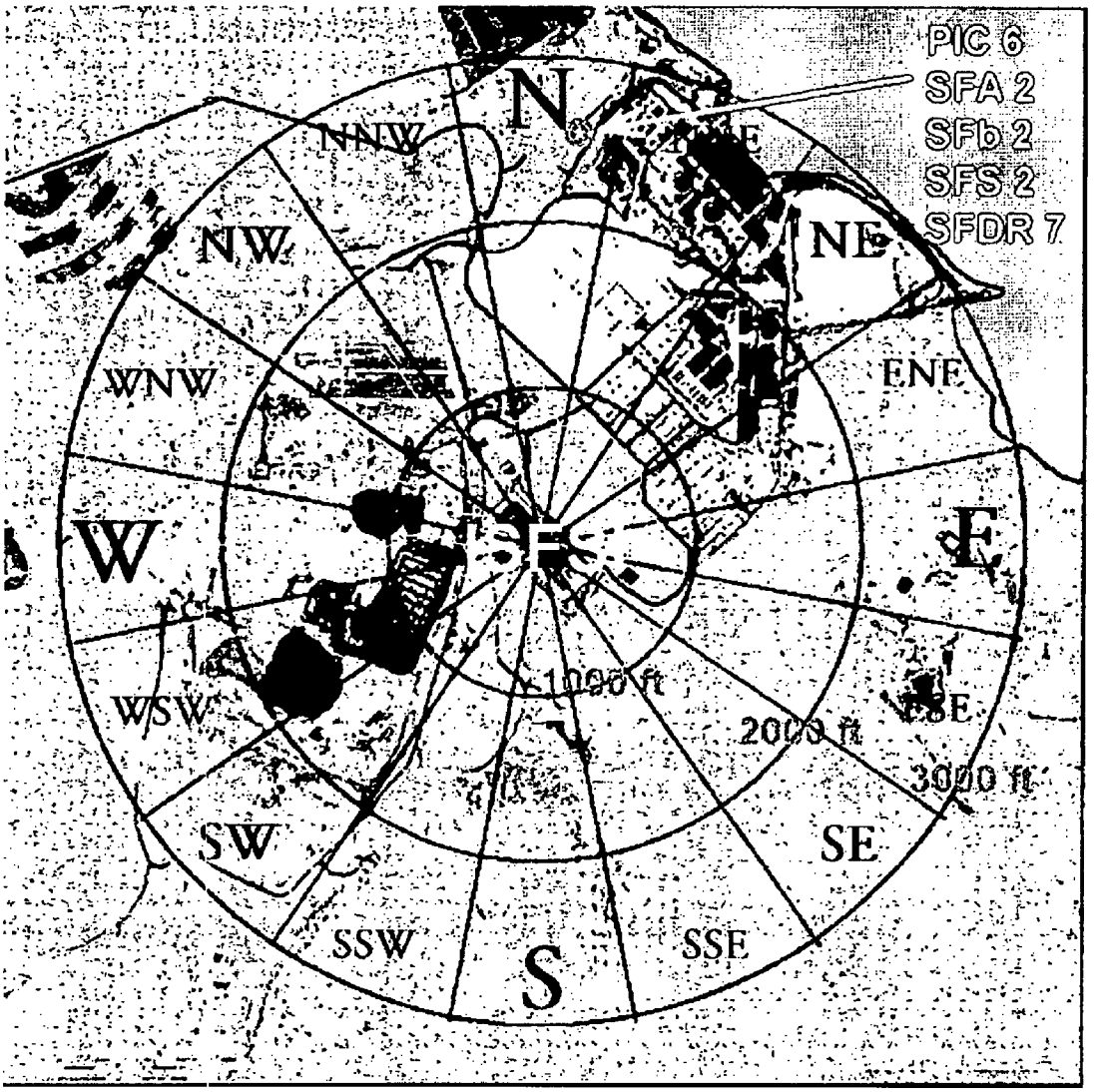

Attachment 22
Map of Environmental Monitoring Sites for ISFSI
(ENLARGED)

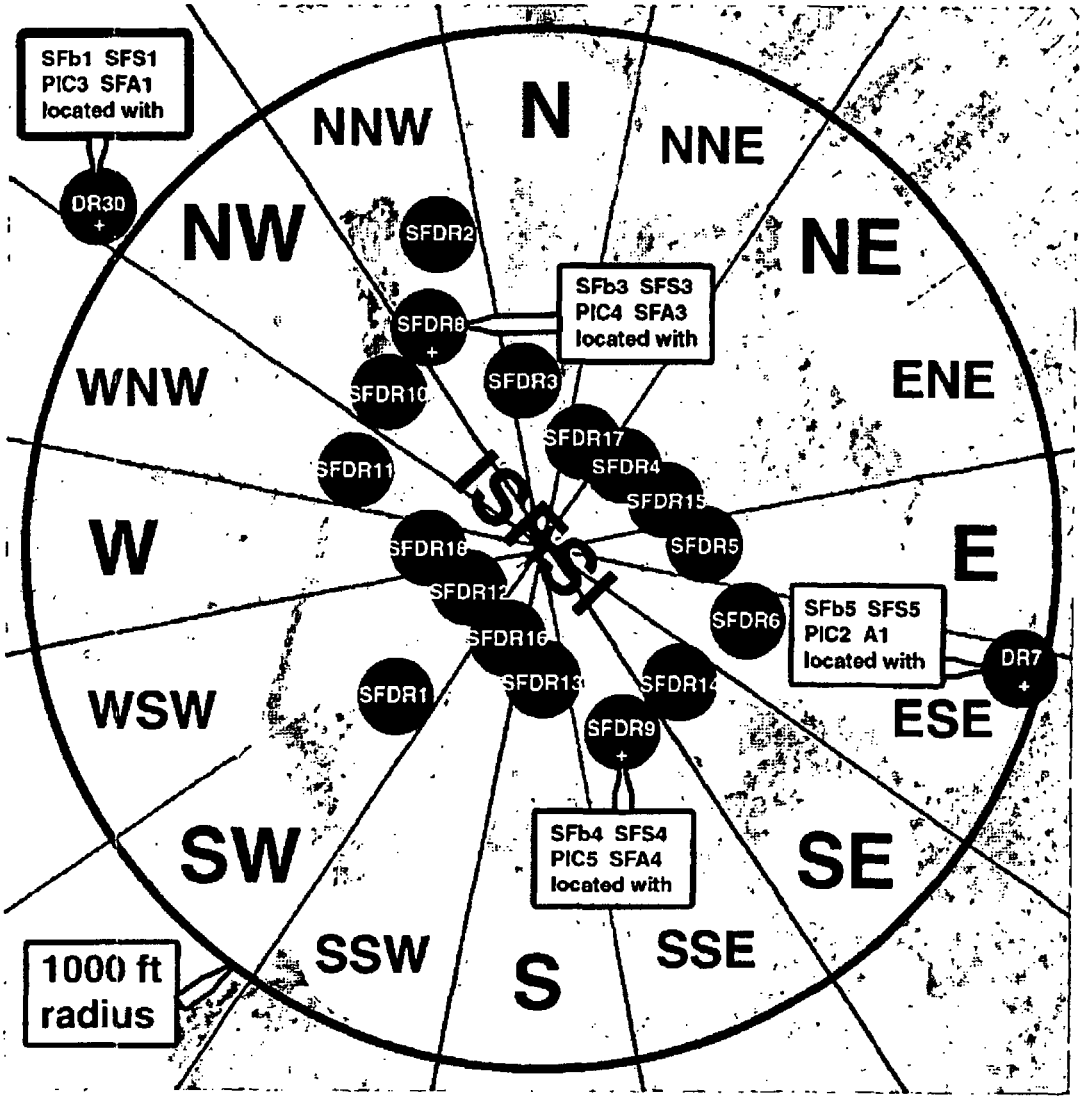

A = Air Sampler (Plant)
DR = Direct Radiation (Plant)
SFDR = Direct Radiation (Spent Fuel)
SFA = Air Sampler (Spent Fuel)
PIC = Pressurized Ion Chamber
SFS = Soil (Spent Fuel)
SFb = Vegetation (Spent Fuel)

Attachment 23
Effluent Radiation Monitors

Description	Radiation Element	Radiation Indicator
Liquid Waste Discharge Radiation Monitor	0-RE-2201	0-RI-2201
Steam Generator Blowdown Effluent Radiation Monitor	1-RE-4095	1-RI-4095
Steam Generator Blowdown Effluent Radiation Monitor	2-RE-4095	2-RI-4095
Steam Generator Blowdown Tank Radiation Monitor	1-RE-4014	1-RI-4014
Steam Generator Blowdown Tank Radiation Monitor	2-RE-4014	2-RI-4014
Wide Range Gas Monitor, Low Range	1-RE-5416	1-RIC-5415
Wide Range Gas Monitor, Low Range	2-RE-5416	2-RIC-5415
Westinghouse Plant Vent Stack Monitor	1-RE-5415	1-RI-5415
Westinghouse Plant Vent Stack Monitor	2-RE-5415	2-RI-5415
GASEOUS RADWASTE PROCESSING SYSTEM Radiation Monitor	0-RE-2191	0-RE-2191

Accident Monitors Not Addressed By The ODCM

Wide Range Gas Monitor, Mid Range	1-RE-5417
Wide Range Gas Monitor, High Range	1-RE-5418
Wide Range Gas Monitor, Mid Range	2-RE-5417
Wide Range Gas Monitor, High Range	2-RE-5418

CALVERT CLIFFS NUCLEAR POWER PLANT
SURVEILLANCE TEST PROCEDURE
UNIT ONE

STP O-27-1

REACTOR COOLANT SYSTEM LEAKAGE EVALUATION

REVISION 20

SAFETY RELATED

CONTINUOUS USE

Approval Authority: Chris Jones
Signature/Date

Effective Date: 12/16/2008

SURVEILLANCE TEST PROCEDURES ADDITIONAL COVER SHEET INFORMATION

A. **Test Performance**

Permission to perform test: _____ / _____
Shift Manager Date

B. **Test completion, results review and approval** (Circle appropriate answer)

Accept. Criteria in spec?	YES NO N/A	Adjustments made?	YES NO N/A
As found results in spec?	YES NO N/A	CR submitted?	YES NO N/A
As left results in spec?	YES NO N/A	Malfunctions indicated?	YES NO N/A

REMARKS: _____

Test completed by: _____ / _____
Date

Analysis of results: _____

Shift Manager review: _____ / _____
Date

Analysis/Comments: _____

Functional Surveillance
Test Coordinator: _____ Date: _____

EQSE (if required): _____ Date: _____

* PORC Meeting No.: _____ Date: _____

* Plant General Manager: _____ Date: _____

* Required only if completed test on SR and designated NSR structures, systems and components (per Q List) identified a malfunction or were out of specification.

Attach a separate sheet, if necessary, to document additional comments.

TABLE OF CONTENTS

TITLE	PAGE
1.0 PURPOSE	5
2.0 APPLICABILITY/SCOPE	5
3.0 REFERENCES	5
4.0 PREREQUISITES	6
5.0 PRECAUTIONS	7
6.0 PERFORMANCE	8
6.1 RCS LEAK RATE: PC PROGRAM	18
6.2 RCS LEAK RATE: MANUAL CALCULATION	19
6.3 RCS LEAK RATE: ALTERNATE MANUAL CALCULATION	20
6.4 RCDT INLEAKAGE CALCULATION	24
6.5 SAFETY INJECTION TANK OUTLEAKAGE	25
6.6 QUENCH TANK INLEAKAGE	26
6.7 RWT INLEAKAGE	27
6.8 ACCEPTANCE CRITERIA	28
7.0 POST PERFORMANCE ACTIVITIES	29
8.0 BASES	29
9.0 RECORDS	29
TABLE 1 RCS SPECIFIC VOLUME (V_f) AT 2250 PSIA	30
TABLE 2 RCDT LEVEL CONVERSION	31
TABLE 3 QUENCH TANK LEVEL CONVERSION	32
ATTACHMENT 1 RCS LEAK RATE DATA SHEET	33
ATTACHMENT 2 RCS LEAK RATE DATA SHEET: SUPPLEMENTAL	47
ATTACHMENT 3 RCS LEAK RATE CALCULATION WORKSHEET	49
ATTACHMENT 4 RCDT, SIT, VLV, QT, RWT, CHG PP AND S/G CALCULATION WORKSHEET	59

LIST OF EFFECTIVE PAGES

PAGE NUMBERS	REVISION
1-61	20

PROCEDURE ALTERATIONS

PAGE NUMBERS	REVISION/CHANGE
10	02001

1.0 PURPOSE

A. To provide a means of determining the amount and source of leakage from the Reactor Coolant System to ensure the limits as set in the Technical Specifications are not exceeded. **[B0441] [B0660]**

> **NOTE**
> The industry standard normalizes leakrate to 70° F. This procedure normalizes leakrate to 120° F, which is minimally conservative with respect to the industry standard.

B. To provide a means of Reactor Coolant System leakrate trending for the detection and prevention of unidentified leakage below the limits of the Technical Specifications. **[B2474]**

2.0 APPLICABILITY/SCOPE

A. Performance of this STP, in conjunction with CP-236, SPECIFICATION AND SURVEILLANCE, PRIMARY-TO SECONDARY LEAKS, satisfies TS SR 3.4.13.1 and the action requirements of TS 3.4.14.A.1 and 3.4.14.B.1.2.

B. RCS leak rate manual calculations shall be performed on ATTACHMENT 3, RCS LEAK RATE CALCULATION WORKSHEET. RCDT, SIT, VLV, QT, RWT, CHG PP and S/G leakage calculations shall be performed on ATTACHMENT 4, RCDT, SIT, VLV, QT, RWT, CHG PP AND S/G CALCULATION WORKSHEET. Additional calculations shall be performed on facsimiles of ATTACHMENT 3 or ATTACHMENT 4 and attached to this procedure for review and documentation **PER** Section 9.0.

C. **IF** performing this STP for other than scheduled surveillances, **THEN** indicate the reason(s) for being performed in the Remarks section below. Include any MO and CR numbers applicable, along with the date and time performed.

Remarks:_____
_____
_____
_____
_____

3.0 REFERENCES

A. Procedures

1. AOP-2A, Excessive Reactor Coolant Leakage.
2. OI-1B, Quench Tank Operations.
3. OI-2A, Chemical and Volume Control System.
4. OI-2B, CVCS Boration, Dilution and Makeup Operations.

3.0.A Procedures (Continued)

5. EN-4-104, Surveillance Testing.

6. CNG-HU-1.01-1001, Human Performance Tools and Verification Practices.

B. Codes and Standards

1. ASME Steam Tables.

2. Technical Specifications.

4.0 PREREQUISITES **INITIALS**

A. Unit 1 is in Mode 1-4 at steady state conditions.

B. RCS Pressure is greater than 100 PSIA. **[B0441]**

C. A steam bubble exists in the pressurizer and level is being maintained between 133 and 225 inches.

D. Charging and Letdown is in operation.

E. Zinc injection is **NOT** in progress during Gross RCS Leakage (GROSS LKG) data collection.

> **NOTE**
> The following conditions are **NOT** a requirement for the Technical Specification leakage evaluation.

F. None of the following are planned during the expected duration of Gross RCS Leakage (GROSS LKG) data collection: **[B2474]**

- RCS makeup from any source
- CVCS diversion
- Sampling of the RCS or CVCS
- Chemical addition to the RCS or CVCS

G. **IF** the Unit is on Shutdown Cooling,
THEN Shutdown Cooling alignment changes shall **NOT** be made for the duration of data collection. **[B0441]**

H. Administrative Requirements:

1. **PERFORM** a pretest page check of this STP. _____

5.0 PRECAUTIONS

A. The Reactor Coolant System (RCS) leak rate shall be observed to be in accordance with TS 3.4.13.

B. **IF** T_{AVG} is less than 530 °F **OR** PZR pressure is less than 2200 PSIA, **THEN** the Alternate Manual Calculation Section 6.3 must be used.

C. Reactor Coolant System leakrate trending should be performed daily, during steady state conditions, and within 12 hours of reaching steady state conditions if **NOT** performed in the previous 72 hours. **[B2474]**

D. This procedure has been reviewed for Risk Based Verification Practices. No specific steps were identified. The SM, CRS, or any other person involved with the task may designate steps requiring the use of Verification Practices.

6.0 PERFORMANCE

NOTE

The daily RCS Leakage Evaluation of Gross RCS Leakage (GROSS LKG) shall be a 2 hour evaluation. The time of performance may be adjusted ±1 hour for operational concerns. Performance at other than 2300 to 0100 shall be noted in the Comment section of ATTACHMENT 1.

A. **IF** performing the daily RCS Leakage Evaluation,
THEN DAILY at 2300 **AND** the following 0100, **RECORD** the following parameters on ATTACHMENT 1:

1. T_{AVG} (T_{COLD} may be used from a loop with an operating reactor coolant pump when Tavg is less than 530 ° F **OR** temperature FROM RCS on 1-TR-351 when the Unit is on Shutdown Cooling)

2. RC makeup integrator reading.

3. Boric Acid integrator reading.

4. Diversion integrator reading.

5. Volume Control Tank level.

6. Pressurizer pressure. (PI-105 or PI-103/103-1 should be used when PZR pressure less than 1600 PSIA)

7. Pressurizer level.

NOTE

Supplemental RCS Leakage Evaluations of Gross RCS Leakage (GROSS LKG) shall be run for a minimum of one hour and should be run for two hours.

B. **IF NOT** performing the daily RCS leakage Evaluation,
THEN RECORD initial and final Step A parameters on ATTACHMENT 2 **AND RECORD** for each day used:

1. The day and time in the DAY/TIME column.

2. The reason(s) for using ATTACHMENT 2 in the Comments section.

3. On ATTACHMENT 1, that the leakrate was calculated on ATTACHMENT 2.

C. **RECORD** the day and amount of RWT makeup completed during the duration of Gross RCS Leakage (GROSS LKG) data collection in the RWT M/U DAY/AMT column on the appropriate page of ATTACHMENT 1 or ATTACHMENT 2.

6.0 PERFORMANCE (Continued)

D. **IF** instrumentation other than those indicated on ATTACHMENT 1 or ATTACHMENT 2 are used,
THEN RECORD the instrument(s) used in the Comment section on the applicable page.

E. **IF** performing Reactor Coolant System leakrate trending,
AND ANY of the following occur during Gross RCS Leakage (GROSS LKG) data collection:

- CVCS diversion to RCW
- Fast Boration to the RCS
- Initial and final values of T_{AVG} differ by greater than 0.5° F
- Initial and final Reactor Power differs by greater than 0.1%

THEN a new set of initial and final data must be taken and leakrate performed on ATTACHMENT 2. Note this in the Comment section of ATTACHMENT 1 or ATTACHMENT 2.

F. **IF NOT** performing Reactor Coolant System leakrate trending,
AND Fast Boration to the RCS is performed during Gross RCS Leakage (GROSS LKG) data collection,
THEN the amount of makeup to the RCS must be estimated and added to the total makeup **OR** a new set of initial data must be taken and leakrate performed on ATTACHMENT 2. Note this in the Comment section of ATTACHMENT 1 or ATTACHMENT 2.

6.0 PERFORMANCE (Continued)

NOTE
All leakage values in this procedure shall be recorded as calculated, positive **OR** negative. 02001

G. **CALCULATE** Gross RCS Leakage (GROSS LKG) **PER** Section 6.1, 6.2 **OR** 6.3

1. **IF** the GROSS LKG is greater than 11 GPM,
THEN IMPLEMENT AOP-2A.

2. **IF** the GROSS LKG is greater than 1.0 GPM,
THEN PERFORM Steps H through I.

3. **IF** the GROSS LKG is less than or equal to 1.0 GPM,
AND NOT performing Reactor Coolant System leakrate trending,
THEN:

NOTE
The NET LKG value should be rounded to the nearest one-hundredth GPM.

a. **RECORD** the GROSS LKG value in the NET LKG column
AND MARK N/A the RCDT LKG, SIT LKG, VLV LKG, QT LKG, RWT LKG, S/G LKG and CHG PP LKG columns on ATTACHMENT 1 or ATTACHMENT 2.

b. **PROCEED** to Step 6.0.S.

4. **IF** the GROSS LKG is less than or equal to 1.0 GPM,
AND performing Reactor Coolant System leakrate trending,
THEN PERFORM Steps H through Q as desired to achieve a value below those specified in Step 6.0.V.3.

H. **CALCULATE** the RCS Valve Leakage (VLV LKG) as follows:

1. **CALCULATE** the Reactor Coolant Drain Tank inleakage (RCDT LKG) **PER** Section 6.4.

2. **CALCULATE** the Safety Injection Tank outleakage (SIT LKG) to the RCDT **PER** Section 6.5.

3. **SUBTRACT** the SIT LKG from RCDT LKG column on ATTACHMENT 1 or ATTACHMENT 2 showing calculations on ATTACHMENT 4.

4. **RECORD** the results in the VLV LKG column on ATTACHMENT 1 or ATTACHMENT 2.

6.0 PERFORMANCE (Continued)

I. **IF** the GROSS LKG is greater than 1.0 GPM,
THEN SUBTRACT the VLV LKG from GROSS LKG column on ATTACHMENT 1 or ATTACHMENT 2 showing calculations on ATTACHMENT 4.

1. **IF** the result is less than or equal to 1.0 GPM,
THEN:

NOTE
The NET LKG value should be rounded to the nearest one-hundredth GPM.

a. **RECORD** the value in the NET LKG column
AND MARK N/A in the QT LKG, RWT LKG and CHG PP LKG column on ATTACHMENT 1 or ATTACHMENT 2.

b. **PROCEED** to Step 6.0.S.

2. **IF** the result is greater than 1.0 GPM,
THEN PERFORM Steps J through K.

J. **CALCULATE** the Quench Tank Inleakage from the PORV and Code Safety Valves **PER** Section 6.6.

K. **IF** the GROSS LKG minus VLV LKG is greater than 1.0 GPM,
THEN CALCULATE the NET LKG showing calculations on ATTACHMENT 4 as follows:

1. **SUBTRACT** the QT LKG and VLV LKG columns from the GROSS LKG column on ATTACHMENT 1 or ATTACHMENT 2.

a. **IF** the result is less than or equal to 1.0 GPM,
THEN:

NOTE
The NET LKG value should be rounded to the nearest one-hundredth GPM.

- **RECORD** the value in the NET LKG column
AND MARK N/A in the CHG PP LKG column on ATTACHMENT 1 or ATTACHMENT 2.

- **PROCEED** to Step 6.0.S.

b. **IF** the result is greater than 1.0 GPM, **AND** the Unit is **NOT** on Shutdown Cooling,
THEN PERFORM Steps N through O.

c. **IF** the result is greater than 1.0 GPM, **AND** the Unit is on Shutdown Cooling,
THEN PERFORM L through M.

6.0 PERFORMANCE (Continued)

L. **IF** the Unit is on Shutdown Cooling,
THEN CALCULATE the RWT Inleakage **PER** Section 6.7.

M. **IF** the NET LKG in Step 6.0.K is greater than 1.0 GPM,
THEN CALCULATE the NET LKG showing calculations on ATTACHMENT 4 as follows:

1. **SUBTRACT** the QT LKG, VLV LKG and RWT LKG columns from the GROSS LKG column on ATTACHMENT 1 or ATTACHMENT 2.

a. **IF** the result is less than or equal to 1.0 GPM,
THEN:

NOTE
The NET LKG value should be rounded to the nearest one-hundredth GPM.

- **RECORD** the value in the NET LKG column
AND MARK N/A in the CHG PP LKG column on ATTACHMENT 1 or ATTACHMENT 2.

- **PROCEED** to Step 6.0.S.

b. **IF** the result is greater than 1.0 GPM,
THEN PERFORM Steps N through O.

N. **RECORD** Chemistry's calculated Steam Generator Leakage value from CP-236 in the S/G LKG column of ATTACHMENT 1 or ATTACHMENT 2 **AND** in ATTACHMENT 4.J.2.

6.0 PERFORMANCE (Continued)

O. **IF** NET LKG in Step 6.0.K is greater than 1.0 GPM
OR if the Unit is on Shutdown Cooling Step and NET LKG in Step 6.0.M is greater than 1.0 GPM,
THEN SUBTRACT the Steam Generator Leakage (S/G LKG) from the NET LKG in Step 6.0.K **OR** if the Unit is on Shutdown Cooling Step 6.0.M, showing calculations on ATTACHMENT 4.

1. **IF** the result is less than or equal to 1.0 GPM,
THEN:

NOTE
The NET LKG value should be rounded to the nearest one-hundredth GPM.

a. **RECORD** the value in the NET LKG column
AND MARK N/A CHG PP LKG column on ATTACHMENT 1 or ATTACHMENT 2.

b. **NOTE** in the Comment section that the steam generator primary to secondary leakage was used to calculate the unidentified leakage criteria.

c. **PROCEED** to Step 6.0.S.

2. **IF** the result is greater than 1.0 GPM,
THEN PERFORM steps P through Q.

WARNING
IF the GROSS LKG is less than or equal to 1.0 GPM,
AND performing Reactor Coolant System leakrate trending,
THEN due to dose considerations, CHG PP packing leakage should only be calculated once per 7 days with known leakage, **OR** any time the RCS Gross Leakrate has risen by greater than one Standard Deviation.

P. **CALCULATE** CHG PP LKG by performing DETERMINING CHARGING PUMP PACKING LEAKAGE **PER** OI-2A,
AND RECORD the value on ATTACHMENT 1 or ATTACHMENT 2.

6.0 PERFORMANCE (Continued)

> **NOTE**
> The CHG PP LKG value is not part of the PC program for RCS Leakage determination. Therefore, the value must be manually subtracted from the calculation, when used, for Net RCS leakage.

Q. **IF** NET LKG in Step 6.0.O is greater than 1.0 GPM, **THEN SUBTRACT** the CHG PP LKG from the NET LKG showing the calculations on ATTACHMENT 4.

1. **IF** the result is less than or equal to 1.0 GPM, **THEN**:

> **NOTE**
> The NET LKG value should be rounded to the nearest one-hundredth GPM.

a. **RECORD** the value in the NET LKG column on ATTACHMENT 1 or ATTACHMENT 2.

b. **NOTE** in the Comment section that Charging Pump Packing Leakage was used to calculate the unidentified leakage criteria.

c. **PROCEED** to step 6.0.S.

2. **IF** the result is greater than 1.0 GPM, **THEN**:

> **NOTE**
> The NET LKG value should be rounded to the nearest one-hundredth GPM.

a. **RECORD** the value in the NET LKG column on ATTACHMENT 1 or ATTACHMENT 2.

b. **NOTIFY** the CRS immediately.

c. **IMPLEMENT** AOP-2A, EXCESSIVE REACTOR COOLANT LEAKAGE, in conjunction with the completion of this procedure.

6.0 PERFORMANCE (Continued)

NOTE
The CHG PP LKG value is not part of the PC program for RCS Leakage determination. Therefore, the value must be manually subtracted from the calculation, when used, for Net RCS leakage.

R. **IF** NET LKG is less than or equal to 1.0 GPM,
AND performing Reactor Coolant System leakrate trending,
THEN SUBTRACT ALL used values from the GROSS LKG value showing the calculations on ATTACHMENT 4.

NOTE
The NET LKG value should be rounded to the nearest one-hundredth GPM.

1. **RECORD** the value in the NET LKG column on ATTACHMENT 1 or ATTACHMENT 2.

S. Person performing the calculations shall initial or sign the PERF INIT column on ATTACHMENT 1, ATTACHMENT 2, ATTACHMENT 3 or ATTACHMENT 4 as applicable.

T. A verification of the calculations shall be performed and indicate all calculations are correct by initialing or signing the VERF INIT column on ATTACHMENT 1, ATTACHMENT 2, ATTACHMENT 3 or ATTACHMENT 4, as applicable.

U. An SRO, other than one that had performed the verification, shall perform a review of the STP following the verification. This review shall include, but is not limited to, the following:

- Verifying the applicable sections or attachments have been completed correctly and second checked.
- Verifying the leak rate is within reason and comparable to the last leak rate completed.
- Verifying the leak rate satisfies the Acceptance Criteria of Section 6.8.

6.0 PERFORMANCE (Continued)

V. **IF** performing Reactor Coolant System leakrate trending,
THEN PERFORM the following: **[B2474]**

> **NOTE**
> The NET LKG value should be rounded to the nearest one-hundredth GPM.

1. **RECORD** ALL values used in the RCS Leak Rate Data Base.

> **NOTE**
> - These values are obtained from the RCS Leak Rate Data Base. If the data base is unavailable, the values are recorded here for reference.
> - This step should be done on the first performance of the STP. Subsequent performances should verify the current values have been recorded.

2. **RECORD** current values:

   Baseline Mean (μ): _____ GPM

   Standard Deviation (σ): _____ GPM

   - **IF** the values change,
     THEN RECORD the new values
     AND the date changed:

     Baseline Mean (μ): _____ GPM Date: _____

     Standard Deviation (σ): _____ GPM Date: _____

6.0.V PERFORMANCE (Continued)

3. **IF** ANY of the following conditions exist:

   - The 7 day rolling average Unidentified RCS Leakrate is greater than 0.1 GPM.
   - 9 consecutive daily Unidentified RCS Leakrates are greater than the Baseline Mean.
   - Daily Unidentified RCS Leakrate greater than 0.3 GPM.
   - 2 consecutive daily Unidentified RCS Leakrates greater than 0.15 GPM.
   - Daily Unidentified RCS Leakrate greater than Baseline Mean plus 3 times Standard Deviation ($\mu + 3\sigma$).
   - 2 of 3 consecutive daily Unidentified RCS Leakrates greater than Baseline Mean plus 2 times Standard Deviation ($\mu + 2\sigma$).

   THEN PROCEED to OI-1A, Reactor Coolant System and Pump Operations, Section titled HIGH RCS LEAKAGE.

6.1 RCS LEAK RATE: PC PROGRAM

A. **IF** RCS pressure is 2200 to 2300 PSIA
AND T_{AVG} is greater than or equal to 530 ° F,
THEN PERFORM the following:

1. **CALCULATE** the Gross RCS Leakage, normalized to 120 ° F, by using the RCS Leak Rate Program.

2. **ENTER** the data from ATTACHMENT 1 **OR** ATTACHMENT 2 as prompted by the Leakrate program.

3. **RECORD** the result in the GROSS LKG column on ATTACHMENT 1 **OR** ATTACHMENT 2.

6.2 RCS LEAK RATE: MANUAL CALCULATION

A. **CALCULATE** the Gross RCS Leakage normalized to 120 ° F by use of the following equation showing calculations on ATTACHMENT 3 **IF**:

1. RCS pressure is 2200 PSIA to 2300 PSIA **AND**:

2. T_{AVG} is greater than or equal to 530 ° F.

$$\text{GROSS RCS LEAKAGE } (FT^3) = 155.1\left[\frac{(V_1 - V_0)}{V_1 V_0}\right] + \left[\frac{(MU - DIV)}{7.4805}\right] - \left[2.493(LP_1 - LP_0)\right] - \left[3.61(LV_1 - LV_0)\right]$$

Where:

V_0 = RCS specific volume at initial T_{AVG} from TABLE 1.

V_1 = RCS specific volume at final T_{AVG} from TABLE 1.

M/U = Makeup, in gallons. (RCS M/U plus BA M/U)

DIV = Letdown diverted, in gallons; including RWT M/U.

LP_0 = Initial pressurizer level, in inches.

LP_1 = Final pressurizer level, in inches.

LV_0 = Initial VCT level, in inches.

LV_1 = Final VCT level, in inches.

B. **CHANGE** the Gross RCS Leakage to GPM by using one of the following equations showing calculations on ATTACHMENT 3:

1. **IF** the time interval is two (2) hours,
THEN USE: GPM = $FT^3 \times (6.235 \times 10^{-2})$

2. **IF** the time interval is other than two (2) hours,
THEN USE: GPM = $\frac{FT^3}{t} \times (0.1247)$

Where:

FT^3 = Gross RCS Leakage from Step A.
t = Time, in hours, between data sets.

C. **RECORD** the value in the GROSS LKG column on ATTACHMENT 1 or ATTACHMENT 2.

6.3 RCS LEAK RATE: ALTERNATE MANUAL CALCULATION

A. **IF** the Unit is **NOT** on Shutdown Cooling,
THEN CALCULATE the Gross RCS Leakage normalized to 120 ° F by use of the following equation showing calculations on ATTACHMENT 3 **IF**:

1. RCS pressure is less than 2200 PSIA **OR**:

2. T_{AVG} is less than 530 ° F.

$$\text{GROSS RCS LEAKAGE (FT}^3\text{)} = 155.1\left[\frac{(V_1 - V_0)}{V_1\ V_0}\right] + \left[\frac{(MU - DIV)}{7.4805}\right] - \left[3.61(LV_1 - LV_0)\right] - 0.0673\left[\frac{LP_1}{VP_1} - \frac{LP_0}{VP_0}\right]$$

Where:

V_0 = RCS specific volume at initial pressure and temperature from ASME Steam Tables.

V_1 = RCS specific volume at final pressure and temperature from ASME Steam Tables.

M/U = Makeup, in gallons. (RCS M/U plus BA M/U)

DIV = Letdown diverted, in gallons; including RWT M/U.

LP_0 = Initial pressurizer level, in inches.

LP_1 = Final pressurizer level, in inches.

VP_0 = PZR specific volume of water at initial pressure from ASME Steam Tables.

VP_1 = PZR specific volume of water at final pressure from ASME Steam Tables.

LV_0 = Initial VCT level, in inches.

LV_1 = Final VCT level, in inches.

6.3 RCS LEAK RATE: ALTERNATE MANUAL CALCULATION (Continued)

B. **IF** the Unit is on Shutdown Cooling,
THEN CALCULATE the Gross RCS Leakage normalized to 120 ° F by use of the following equation showing calculations on ATTACHMENT 3 **IF**:

1. One Shutdown Cooling Heat Exchanger is in service with RCS flow.

$$\text{GROSS RCS LEAKAGE } (FT^3) = 169.4\left[\frac{(V_1 - V_0)}{V_1\ V_0}\right] + \left[\frac{(MU - DIV)}{7.4805}\right] - \left[3.61(LV_1 - LV_0)\right] - 0.0673\left[\frac{LP_1}{VP_1} - \frac{LP_0}{VP_0}\right]$$

Where:

V_0 = RCS specific volume at initial pressure and temperature from ASME Steam Tables.

V_1 = RCS specific volume at final pressure and temperature from ASME Steam Tables.

M/U = Makeup, in gallons. (RCS M/U plus BA M/U)

DIV = Letdown diverted, in gallons; including RWT M/U.

LP_0 = Initial pressurizer level, in inches.

LP_1 = Final pressurizer level, in inches.

VP_0 = PZR specific volume of water at initial pressure from ASME Steam Tables.

VP_1 = PZR specific volume of water at final pressure from ASME Steam Tables.

LV_0 = Initial VCT level, in inches.

LV_1 = Final VCT level, in inches.

6.3 RCS LEAK RATE: ALTERNATE MANUAL CALCULATION (Continued)

C. **IF** the Unit is on Shutdown Cooling,
THEN CALCULATE the Gross RCS Leakage normalized to 120 ° F by use of the following equation showing calculations on ATTACHMENT 3 **IF**:

1. Two Shutdown Cooling Heat Exchangers are in service with RCS flow.

$$\text{GROSS RCS LEAKAGE } (FT^3) = 179.8\left[\frac{(V_1 - V_0)}{V_1\ V_0}\right] + \left[\frac{(MU - DIV)}{7.4805}\right] - \left[3.61(LV_1 - LV_0)\right] - 0.0673\left[\frac{LP_1}{VP_1} - \frac{LP_0}{VP_0}\right]$$

Where:

V_0 = RCS specific volume at initial pressure and temperature from ASME Steam Tables.

V_1 = RCS specific volume at final pressure and temperature from ASME Steam Tables.

M/U = Makeup, in gallons. (RCS M/U plus BA M/U)

DIV = Letdown diverted, in gallons; including RWT M/U.

LP_0 = Initial pressurizer level, in inches.

LP_1 = Final pressurizer level, in inches.

VP_0 = PZR specific volume of water at initial pressure from ASME Steam Tables.

VP_1 = PZR specific volume of water at final pressure from ASME Steam Tables.

LV_0 = Initial VCT level, in inches.

LV_1 = Final VCT level, in inches.

6.3 RCS LEAK RATE: ALTERNATE MANUAL CALCULATION (Continued)

D. **CHANGE** the Gross RCS Leakage to GPM by using one of the following equations showing calculations on ATTACHMENT 3:

1. **IF** the time interval is two (2) hours,
   THEN USE: $GPM = FT^3 \times (6.235 \times 10^{-2})$

2. **IF** the time interval is other than two (2) hours,
   THEN USE: $GPM = \frac{FT^3}{t} \times (0.1247)$

   Where:

   FT^3 = Gross RCS Leakage from Step A.
   t = Time, in hours, between data sets.

E. **RECORD** the value in the GROSS LKG column on ATTACHMENT 1 or ATTACHMENT 2.

6.4 RCDT INLEAKAGE CALCULATION

A. The following alignment must be verified or performed to complete the leakage calculation:

1. 11 RC DRN TK PP, 1-HS-4259, off.
2. RCDT PP CNTMT ISOL, 1-RCW-4260-CV, shut.
3. 11 RCDT DRN TO CNTMT FLOOR, 1-RCW-4258, shut.
4. Draining of the Quench Tank **NOT** in progress.
5. RCP controlled bleed-off is aligned to the VCT.
6. Draining from the RCS **NOT** in progress.
7. RCDT level pumped down to less than or equal to 15 inches.
8. SIT RECIRC TO RCDT, 1-SI-661-CV, shut.
9. PASS return to RCDT, 1-PS-6529 (1C101), shut.

B. **OPEN** WGS CNTMT ISOL, 1-WGS-2180-CV, and WGS CNTMT B/U ISOL, 1-WGS-2181-CV.

C. **RECORD** the start time and initial RCDT level (in) on ATTACHMENT 4.

D. **ALLOW** the RCDT level to increase for six (6) hours **OR** until a level of 35 inches is attained.

E. **RECORD** the stop time and final RCDT level (in) on ATTACHMENT 4.

F. **SHUT** WGS CNTMT ISOL, 1-WGS-2180-CV, and WGS CNTMT B/U ISOL, 1-WGS-2181-CV.

G. **USING** TABLE 2, **CONVERT** the RCDT levels recorded in Steps C and E into gallons **AND** showing calculations on ATTACHMENT 4, perform the following:

1. **SUBTRACT** the RCDT initial volume from the RCDT final volume to determine the total volume change.
2. **DIVIDE** the total volume change by the elapsed time in minutes between Steps C and E.
3. **RECORD** the result in the RCDT LKG column on ATTACHMENT 1 or ATTACHMENT 2.

6.5 SAFETY INJECTION TANK OUTLEAKAGE

A. **DETERMINE** the Safety Injection Tanks (SITs) leak rate from the Control Room Log Sheet as follows:

1. **RECORD** the start and stop times of the SIT LVL data on ATTACHMENT 4.

2. **CALCULATE** the sum Total SIT outleakage by using the RCS Leak Rate PC Program **OR** by using the following equation, showing calculations on ATTACHMENT 4:

$$\text{SIT LKG} = \frac{\text{(TOTAL SIT LVL DECREASE) x 40 GAL/IN}}{\text{TIME (in minutes)}}$$

B. **RECORD** the results in the SIT LKG column on ATTACHMENT 1 or ATTACHMENT 2.

6.6 QUENCH TANK INLEAKAGE

A. The following alignment must be verified or performed to complete the leakage calculation:

1. Draining of the Quench Tank (QT) **NOT** in progress.

2. DI WTR CNTMT ISOL, 1-DW-5460-CV, shut.

3. QT level approximately 28.5 inches **OR** low enough to support this test without exceeding 30.5 inches.

B. **RECORD** the start time, QT initial level and pressure on ATTACHMENT 4.

> **NOTE**
> Quench Tank pressure may be vented as necessary to limit pressure to less than 10 PSIG during the performance of the following step.

C. **AFTER** six (6) hours **OR** QT level rises to 30.5 inches, **THEN**:

1. **VENT** the QT pressure to the value recorded in Step B to the Waste Gas header by opening the following valves:

   - QT Vent, 1-RC-400-CV
   - WGS CNTMT B/U ISOL, 1-WGS-2181-CV
   - WGS CNTMT ISOL, 1-WGS-2180-CV

2. **RECORD** the stop time and QT final level on ATTACHMENT 4.

D. **USING** TABLE 3, **CONVERT** the QT levels recorded in Steps B and C.2 into gallons **AND** showing calculations on ATTACHMENT 4, perform the following:

1. **SUBTRACT** the QT initial volume from the QT final volume to determine the total volume change.

2. **DIVIDE** the total volume change by the elapsed time in minutes between Steps B and C.2.

3. **RECORD** the results in the QT LKG column on ATTACHMENT 1 or ATTACHMENT 2.

6.7 RWT INLEAKAGE

NOTE
No RWT makeup is permitted during RWT Inleakage rate data collection.

1. **IF** the Unit is on Shutdown Cooling,
   THEN DETERMINE the RWT Inleakage rate as follows:

   a. **RECORD** the start time and initial RWT level (in) on ATTACHMENT 4.

   b. **ALLOW** the RWT level to increase for six (6) hours. **[B0441]**

   c. **RECORD** the stop time and final RWT level (in) on ATTACHMENT 4.

   d. **CALCULATE** the sum Total RWT inleakage by using the following equation, showing calculations on ATTACHMENT 4:

$$\text{RWT LKG} = \frac{\text{(TOTAL RWT LVL INCREASE) x 842 GAL/in}}{\text{TIME (in minutes)}}$$

2. **RECORD** the results in the RWT LKG column on ATTACHMENT 1 or ATTACHMENT 2. (N/A the RWT LKG column if the Unit is **NOT** on Shutdown Cooling)

6.8 ACCEPTANCE CRITERIA

NOTE

- Performance of this section constitutes a supervisory review. Actual observation of equipment response by the SRO performing this review is not required. Being able to answer YES or N/A to a step signifies that the noted step has been completed and signed off by a qualified operator **other than the SRO reviewer** and that the actual equipment response is acceptable and valid.
- Verification of this section is denoted by the initialing of the applicable SRO Review block on ATTACHMENT 1 or ATTACHMENT 2.

A. The RCS Net Unidentified Leakage calculated and recorded on ATTACHMENT 1 or ATTACHMENT 2 is less than or equal to 1.0 GPM.

B. Total Identified Leakage (Gross LKG - Net LKG) less than or equal to 10 GPM.

C. The RCS leak rate calculation was completed satisfactorily in less than or equal to 72 hours since the last RCS leak rate calculation. (N/A if first leakrate calculation since shutdown)

D. The RCS leak rate calculation was completed satisfactorily in less than or equal to 24 hours since the last RCS leak rate calculation when required by TS 3.4.14.A.1 and 3.4.14.B.1.2.
(N/A if not required by TS 3.4.14)

E. This surveillance is considered satisfactory if YES or N/A can be answered in all steps above.

1. **IF** unsat,
THEN notify the SM, declare the affected equipment inoperable and take actions as required by Technical Specifications and administrative actions stated in EN-4-104.

2. **INITIATE** a Condition Report for any equipment deficiencies.

7.0 POST PERFORMANCE ACTIVITIES

INITIALS

A. **PERFORM** a post-test page check of this procedure. _____

8.0 BASES

[B0441] Engineering evaluation to provide numerical basis for STP O-027, ES199701028-001 (NEU 98-207)

[B0660] BGE credits STP-O-27-1/2 with discovery of: denting, wear, SCC/IGSCC/PWSCC of the SG HX tubes, and SCC of the RPV head seal leakage detection line. (License Renewal CT199700045 MS#9)

[B2474] WCAP-16465-NP, Pressurized Water Reactor Owners Group Standard RCS Leakage Action Levels and response Guidelines for Pressurized Water Reactors; WCAP-16423-NP, Pressurized Water Reactor Owners Group Standard Process and Methods for Calculating RCS Leak Rate for Pressurized Water Reactors; and OG-07-263 Recommendations for implementation of the above guidelines.

9.0 RECORDS

A. Records generated by this procedure shall be captured and controlled. Prior to transferring records to Document Management for retention, legibility and completeness of the record shall be verified by the transmitting organization.

B. Maintain records as defined in EN-4-104, Surveillance Testing.

TABLE 1

RCS SPECIFIC VOLUME (V_f) AT 2250 PSIA

TEMP °F	V_f	TEMP °F	V_f
530	0.02079	553	0.02143
531	0.02082	554	0.02146
532	0.02084	555	0.02149
533	0.02087	556	0.02152
534	0.02090	557	0.02155
535	0.02092	558	0.02158
536	0.02095	559	0.02161
537	0.02098	560	0.02165
538	0.02100	561	0.02168
539	0.02103	562	0.02171
540	0.02106	563	0.02174
541	0.02108	564	0.02178
542	0.02111	565	0.02181
543	0.02114	566	0.02184
544	0.02117	567	0.02187
545	0.02120	568	0.02191
546	0.02122	569	0.02194
547	0.02125	570	0.02197
548	0.02128	571	0.02201
549	0.02131	572	0.02204
550	0.02134	573	0.02208
551	0.02137	574	0.02211
552	0.02140	575	0.02215

TABLE 2

RCDT LEVEL CONVERSION

DEPTH(IN)	TO GAL	DEPTH(IN)	TO GAL	DEPTH(IN)	TO GAL
0.5	1.29	17.5	260.84	34.0	626.98
1.0	3.65	18.0	271.49	34.5	637.70
1.5	6.74	18.5	282.10	35.0	648.58
2.0	10.42	19.0	292.81	35.5	659.19
2.5	14.40	19.5	303.55	36.0	669.77
3.0	19.22	20.0	314.45	36.5	680.32
3.5	24.21	20.5	325.39	37.0	690.72
4.0	29.61	21.0	336.35	37.5	700.84
4.5	35.33	21.5	347.35	38.0	711.19
5.0	41.25	22.0	358.17	38.5	721.23
5.5	47.75	22.5	369.61	39.0	731.33
6.0	54.47	23.0	380.88	39.5	741.14
6.5	61.28	23.5	391.91	40.0	751.30
7.0	68.43	24.0	403.18	40.5	760.44
7.5	75.89	24.5	414.45	41.0	770.00
8.0	83.35	25.0	425.67	41.5	779.29
8.5	91.34	25.5	436.94	42.0	788.48
9.0	99.39	26.0	448.47	42.5	797.44
9.5	106.79	26.5	459.61	43.0	806.49
10.0	116.47	27.0	470.90	43.5	815.03
10.5	124.77	27.5	482.17	44.0	823.54
11.0	133.47	28.0	496.36	44.5	831.80
11.5	142.61	28.5	504.83	45.0	840.02
12.0	151.74	29.0	516.09	45.5	847.87
12.5	161.00	29.5	527.30	46.0	855.58
13.0	170.42	30.0	538.53	46.5	862.99
13.5	179.96	30.5	549.80	47.0	870.30
14.0	189.65	31.0	560.83	47.5	877.23
14.5	199.56	31.5	572.10	48.0	883.89
15.0	209.52	32.0	584.11	48.5	890.33
15.5	219.53	32.5	594.24	49.0	896.51
16.0	229.79	33.0	605.23	49.5	902.31
16.5	240.04	33.5	616.11	50.0	907.81
17.0	250.41				

TABLE 3

QUENCH TANK LEVEL CONVERSION

DEPTH(IN)	TO GAL	DEPTH(IN)	TO GAL	DEPTH(IN)	TO GAL
0.0	82.41	16.5	562.43	32.5	1122.87
0.5	93.02	17.0	579.71	33.0	1139.88
1.0	103.88	17.5	597.07	33.5	1156.71
1.5	115.01	18.0	614.41	34.0	1173.33
2.0	126.54	18.5	631.79	34.5	1189.72
2.5	138.52	19.0	649.26	35.0	1206.09
3.0	150.71	19.5	666.94	35.5	1222.22
3.5	163.18	20.0	684.51	36.0	1238.51
4.0	175.92	20.5	702.08	36.5	1254.36
4.5	188.99	21.0	719.73	37.0	1270.15
5.0	202.47	21.5	738.40	37.5	1285.67
5.5	216.03	22.0	755.27	38.0	1301.13
6.0	229.69	22.5	772.94	38.5	1316.50
6.5	243.89	23.0	790.68	39.0	1331.76
7.0	258.35	23.5	808.37	39.5	1346.39
7.5	272.84	24.0	826.25	40.0	1361.61
8.0	287.55	24.5	844.02	40.5	1375.66
8.5	302.44	25.0	861.76	41.0	1389.94
9.0	317.53	25.5	879.43	41.5	1403.87
9.5	332.78	26.0	897.13	42.0	1417.68
10.0	348.46	26.5	914.58	42.5	1431.13
10.5	364.06	27.0	932.59	43.0	1444.59
11.0	379.80	27.5	950.15	43.5	1457.51
11.5	395.77	28.0	967.72	44.0	1470.26
12.0	411.68	28.5	985.38	44.5	1482.57
12.5	428.26	29.0	1002.85	45.0	1494.91
13.0	444.63	29.5	1020.18	45.5	1506.62
13.5	461.09	30.0	1037.53	46.0	1518.39
14.0	477.70	30.5	1054.73	46.5	1529.15
14.5	494.60	31.0	1072.13	47.0	1539.93
15.0	511.43	31.5	1089.29	47.5	1550.32
15.5	528.32	32.0	1106.20	48.0	1560.30
16.0	545.36				

ATTACHMENT 1

RCS LEAK RATE DATA SHEET

DAY 1 THROUGH 5 - GROSS LEAK RATE DATA

MONTH: _____ YEAR: _____

INST No.	XAT 011	1-FQI 210X	1-FQI 210Y	1-FQI 2540	L226	XAP 001	XVL 001	
DAY/ TIME	Tavg	MU INT READING	BA INT READING	DIVERT INT	VCT LVL	PZR PRESS	PZR LVL	GROSS LKG
2300								XXXXX
1 0100								
2300								XXXXX
2 0100								
2300								XXXXX
3 0100								
2300								XXXXX
4 0100								
2300								XXXXX
5 0100								

Comments: _____

ATTACHMENT 1

RCS LEAK RATE DATA SHEET

DAY 1 THROUGH 5 - MISCELLANEOUS LEAK RATE DATA

MONTH: _____ YEAR: _____

DAY/ TIME	RCDT LKG	SIT LKG	VLV LKG	QT LKG	RWT LKG	S/G LKG	CHG PP LKG	NET LKG	PERF INIT	VERF INIT
1 0100										
2 0100										
3 0100										
4 0100										
5 0100										

SRO Review: 1: _____ COMMENTS: _____
2: _____
3: _____ _____
4: _____
5: _____ _____

RWT M/U
DAY/AMT: ___/_____ _____
___/_____
___/_____ _____
___/_____
___/_____ _____

ATTACHMENT 1

RCS LEAK RATE DATA SHEET

DAY 6 THROUGH 10 - GROSS LEAK RATE DATA

MONTH: _____ YEAR: _____								
INST No.	XAT 011	1-FQI 210X	1-FQI 210Y	1-FQI 2540	L226	XAP 001	XVL 001	
DAY/ TIME	Tavg	MU INT READING	BA INT READING	DIVERT INT	VCT LVL	PZR PRESS	PZR LVL	GROSS LKG
2300								XXXXX
6 0100								
2300								XXXXX
7 0100								
2300								XXXXX
8 0100								
2300								XXXXX
9 0100								
2300								XXXXX
10 0100								

Comments: _____

ATTACHMENT 1

RCS LEAK RATE DATA SHEET

DAY 6 THROUGH 10 - MISCELLANEOUS LEAK RATE DATA

MONTH: _____ YEAR: _____

DAY/ TIME	RCDT LKG	SIT LKG	VLV LKG	QT LKG	RWT LKG	S/G LKG	CHG PP LKG	NET LKG	PERF INIT	VERF INIT
6 0100										
7 0100										
8 0100										
9 0100										
10 0100										

SRO Review: 6: _____ COMMENTS: _____
7: _____
8: _____ _____
9: _____
10: _____ _____

RWT M/U
DAY/AMT: ___/_____ _____
___/_____
___/_____ _____
___/_____
___/_____ _____

ATTACHMENT 1

RCS LEAK RATE DATA SHEET

DAY 11 THROUGH 15 - GROSS LEAK RATE DATA

MONTH: _____ YEAR: _____								
INST No.	XAT 011	1-FQI 210X	1-FQI 210Y	1-FQI 2540	L226	XAP 001	XVL 001	
DAY/ TIME	Tavg	MU INT READING	BA INT READING	DIVERT INT	VCT LVL	PZR PRESS	PZR LVL	GROSS LKG
2300								XXXXX
11 0100								
2300								XXXXX
12 0100								
2300								XXXXX
13 0100								
2300								XXXXX
14 0100								
2300								XXXXX
15 0100								

Comments: _____

ATTACHMENT 1

RCS LEAK RATE DATA SHEET

DAY 11 THROUGH 15 - MISCELLANEOUS LEAK RATE DATA

MONTH: _____ YEAR: _____

DAY/ TIME	RCDT LKG	SIT LKG	VLV LKG	QT LKG	RWT LKG	S/G LKG	CHG PP LKG	NET LKG	PERF INIT	VERF INIT
11 0100										
12 0100										
13 0100										
14 0100										
15 0100										

SRO Review: 11: _____ COMMENTS: _____
12: _____
13: _____ _____
14: _____
15: _____ _____

RWT M/U
DAY/AMT: ___/_____ _____
___/_____
___/_____ _____
___/_____
___/_____ _____

ATTACHMENT 1

RCS LEAK RATE DATA SHEET

DAY 16 THROUGH 20 - GROSS LEAK RATE DATA

MONTH: _____ YEAR: _____

INST No.	XAT 011	1-FQI 210X	1-FQI 210Y	1-FQI 2540	L226	XAP 001	XVL 001	
DAY/ TIME	Tavg	MU INT READING	BA INT READING	DIVERT INT	VCT LVL	PZR PRESS	PZR LVL	GROSS LKG
2300								XXXXX
16 0100								
2300								XXXXX
17 0100								
2300								XXXXX
18 0100								
2300								XXXXX
19 0100								
2300								XXXXX
20 0100								

Comments: _____

ATTACHMENT 1

RCS LEAK RATE DATA SHEET

DAY 16 THROUGH 20 - MISCELLANEOUS LEAK RATE DATA

MONTH: _____ YEAR: _____

DAY/ TIME	RCDT LKG	SIT LKG	VLV LKG	QT LKG	RWT LKG	S/G LKG	CHG PP LKG	NET LKG	PERF INIT	VERF INIT
16 0100										
17 0100										
18 0100										
19 0100										
20 0100										

SRO Review: 16: _____ COMMENTS: _____
17: _____
18: _____ _____
19: _____
20: _____ _____

RWT M/U
DAY/AMT: ___/_____ _____
___/_____
___/_____ _____
___/_____
___/_____ _____

ATTACHMENT 1

RCS LEAK RATE DATA SHEET

DAY 21 THROUGH 25 - GROSS LEAK RATE DATA

MONTH: _____ YEAR: _____								
INST No.	XAT 011	1-FQI 210X	1-FQI 210Y	1-FQI 2540	L226	XAP 001	XVL 001	
DAY/ TIME	Tavg	MU INT READING	BA INT READING	DIVERT INT	VCT LVL	PZR PRESS	PZR LVL	GROSS LKG
2300								XXXXX
21 0100								
2300								XXXXX
22 0100								
2300								XXXXX
23 0100								
2300								XXXXX
24 0100								
2300								XXXXX
25 0100								

Comments: _____

ATTACHMENT 1

RCS LEAK RATE DATA SHEET

DAY 21 THROUGH 25 - MISCELLANEOUS LEAK RATE DATA

MONTH: _____ YEAR: _____

DAY/ TIME	RCDT LKG	SIT LKG	VLV LKG	QT LKG	RWT LKG	S/G LKG	CHG PP LKG	NET LKG	PERF INIT	VERF INIT
21 0100										
22 0100										
23 0100										
24 0100										
25 0100										

SRO Review: 21: _____ COMMENTS: _____
22: _____
23: _____ _____
24: _____
25: _____ _____

RWT M/U
DAY/AMT: ___/_____ _____
___/_____
___/_____ _____
___/_____
___/_____ _____

ATTACHMENT 1

RCS LEAK RATE DATA SHEET

DAY 26 THROUGH 30 - GROSS LEAK RATE DATA

MONTH: _____ YEAR: _____								
INST No.	XAT 011	1-FQI 210X	1-FQI 210Y	1-FQI 2540	L226	XAP 001	XVL 001	
DAY/ TIME	Tavg	MU INT READING	BA INT READING	DIVERT INT	VCT LVL	PZR PRESS	PZR LVL	GROSS LKG
2300								XXXXX
26 0100								
2300								XXXXX
27 0100								
2300								XXXXX
28 0100								
2300								XXXXX
29 0100								
2300								XXXXX
30 0100								

Comments: _____

ATTACHMENT 1

RCS LEAK RATE DATA SHEET

DAY 26 THROUGH 30 - MISCELLANEOUS LEAK RATE DATA

MONTH: _____ YEAR: _____

DAY/ TIME	RCDT LKG	SIT LKG	VLV LKG	QT LKG	RWT LKG	S/G LKG	CHG PP LKG	NET LKG	PERF INIT	VERF INIT
26 0100										
27 0100										
28 0100										
29 0100										
30 0100										

SRO Review: 26: _____ COMMENTS: _____
27: _____
28: _____ _____
29: _____
30: _____ _____

RWT M/U
DAY/AMT: ___/_____ _____
___/_____
___/_____ _____
___/_____
___/_____ _____

ATTACHMENT 1

RCS LEAK RATE DATA SHEET

DAY 31 - GROSS LEAK RATE DATA

MONTH: _____ YEAR: _____								
INST No.	XAT 011	1-FQI 210X	1-FQI 210Y	1-FQI 2540	L226	XAP 001	XVL 001	
DAY/ TIME	Tavg	MU INT READING	BA INT READING	DIVERT INT	VCT LVL	PZR PRESS	PZR LVL	GROSS LKG
2300								XXXXX
31 0100								

Comments:_____

ATTACHMENT 1

RCS LEAK RATE DATA SHEET

DAY 31 - MISCELLANEOUS LEAK RATE DATA

MONTH: _____ YEAR: _____

DAY/ TIME	RCDT LKG	SIT LKG	VLV LKG	QT LKG	RWT LKG	S/G LKG	CHG PP LKG	NET LKG	PERF INIT	VERF INIT
31 0100										

SRO Review: 31: _____ COMMENTS: _____

RWT M/U
DAY/AMT: ___/_____

ATTACHMENT 2

RCS LEAK RATE DATA SHEET: SUPPLEMENTAL

GROSS LEAK RATE DATA

MONTH: _____ YEAR: _____								
INST No.	XAT 011	1-FQI 210X	1-FQI 210Y	1-FQI 2540	L226	XAP 001	XVL 001	
DAY/ TIME	Tavg	MU INT READING	BA INT READING	DIVERT INT	VCT LVL	PZR PRESS	PZR LVL	GROSS LKG
____								XXXXX
____								XXXXX
____								XXXXX
____								XXXXX

Comments: _____

ATTACHMENT 2

RCS LEAK RATE DATA SHEET: SUPPLEMENTAL

MISCELLANEOUS LEAK RATE DATA

MONTH: _____ YEAR: _____

DAY/ TIME	RCDT LKG	SIT LKG	VLV LKG	QT LKG	RWT LKG	S/G LKG	CHG PP LKG	NET LKG	PERF INIT	VERF INIT

SRO Review: _____ _____ COMMENTS: _____
_____ _____
_____ _____ _____
_____ _____
_____

RWT M/U
DAY/AMT: ___/_____ ___/_____
___/_____ ___/_____ _____
___/_____ ___/_____
___/_____ ___/_____ _____

ATTACHMENT 3

RCS LEAK RATE CALCULATION WORKSHEET

INITIALS

A. PROCEDURE

1. This attachment is to be used in conjunction with the procedure when an RCS Manual Leak Rate Calculation is required to document the actual performance of the test.

2. Any additional calculations required shall be performed on facsimiles of this attachment and attached to the procedure for review and documentation **PER** Section 9.0.

3. RCS leak rate manual calculation(s) **NOT** required to be performed by the body of this procedure shall be marked N/A in the initials block(s).

4. **RECORD** the following parameters:

   a. Date: _____

   b. Time: _____

   c. PZR Pressure: _____ PSIA

   d. T_{AVG} : _____ °F _____

ATTACHMENT 3

RCS LEAK RATE CALCULATION WORKSHEET

INITIALS

B. GROSS RCS LEAKAGE

1. MANUAL CALCULATION (6.2)

$$\text{GROSS RCS LEAKAGE } (FT^3) = 155.1 \left[\frac{(V_1 - V_\emptyset)}{V_1 \, V_\emptyset} \right] + \left[\frac{(MU - DIV)}{7.48\emptyset5} \right] - \left[2.493(LP_1 - LP_\emptyset) \right] - \left[3.61(LV_1 - LV_\emptyset) \right]$$

$$\underline{\qquad\qquad} (FT^3) = 155.1 \left[\frac{(___ - ___)}{(___ \times ___)} \right] + \left[\frac{(___ - ___)}{7.48\emptyset5} \right] - \left[2.493 \, (___ - ___) \right] - \left[3.61 \, (___ - ___) \right]$$

ATTACHMENT 3

RCS LEAK RATE CALCULATION WORKSHEET

INITIALS

Where:

V_0 = RCS specific volume at Initial T_{AVG} from TABLE 1.

V_1 = RCS specific volume at Final T_{AVG} from TABLE 1.

M/U = Makeup, in gallons. (RCS M/U plus BA M/U)

DIV = Letdown diverted, in gallons; including RWT M/U.

LP_0 = Initial pressurizer level, in inches.

LP_1 = Final pressurizer level, in inches.

LV_0 = Initial VCT level, in inches.

LV_1 = Final VCT level, in inches.

ATTACHMENT 3

RCS LEAK RATE CALCULATION WORKSHEET

INITIALS

2. ALTERNATE MANUAL CALCULATION (6.3.A)
(No Shutdown Cooling)

$$\text{GROSS RCS LEAKAGE } (FT^3) = 155.1\left[\frac{(V_1 - V_0)}{V_1\ V_0}\right] + \left[\frac{(MU - DIV)}{7.4805}\right] - \left[3.61(LV_1 - LV_0)\right] - 0.0673\left[\frac{LP_1}{VP_1} - \frac{LP_0}{VP_0}\right]$$

$$\frac{\quad}{(FT^3)} = 155.1\left[\frac{(__ - __)}{(__ \times __)}\right] + \left[\frac{(__ - __)}{7.4805}\right] - \left[3.61\ (__ - __)\right] - 0.0673\left[__ - __\right]$$

ATTACHMENT 3

RCS LEAK RATE CALCULATION WORKSHEET

INITIALS

Where:

V_0 = RCS specific volume at Initial pressure and temperature from ASME Steam Tables.

V_1 = RCS specific volume at Final pressure and temperature from ASME Steam Tables.

M/U = Makeup, in gallons. (RCS M/U plus BA M/U)

DIV = Letdown diverted, in gallons; including RWT M/U.

LP_0 = Initial pressurizer level, in inches.

LP_1 = Final pressurizer level, in inches.

VP_0 = PZR specific volume of water at Initial pressure from ASME Steam Tables.

VP_1 = PZR specific volume of water at Final pressure from ASME Steam Tables.

LV_0 = Initial VCT level, in inches.

LV_1 = Final VCT level, in inches.

ATTACHMENT 3

RCS LEAK RATE CALCULATION WORKSHEET

INITIALS

3. ALTERNATE MANUAL CALCULATION (6.3.B)
(Shutdown Cooling with 1 HX)

$$\text{GROSS RCS LEAKAGE } (FT^3) = 169.4\left[\frac{(V_1 - V_0)}{V_1\ V_0}\right] + \left[\frac{(MU - DIV)}{7.4805}\right] - \left[3.61(LV_1 - LV_0)\right] - 0.0673\left[\frac{LP_1}{VP_1} - \frac{LP_0}{VP_0}\right]$$

$$\frac{\quad}{(FT^3)} = 169.4\left[\frac{(__ - __)}{(__ \times __)}\right] + \left[\frac{(__ - __)}{7.4805}\right] - \left[3.61\ (__ - __)\right] - 0.0673\left[__ - __\right]$$

ATTACHMENT 3

RCS LEAK RATE CALCULATION WORKSHEET

INITIALS

Where:

V_0 = RCS specific volume at Initial pressure and temperature from ASME Steam Tables.

V_1 = RCS specific volume at Final pressure and temperature from ASME Steam Tables.

M/U = Makeup, in gallons. (RCS M/U plus BA M/U)

DIV = Letdown diverted, in gallons; including RWT M/U.

LP_0 = Initial pressurizer level, in inches.

LP_1 = Final pressurizer level, in inches.

VP_0 = PZR specific volume of water at Initial pressure from ASME Steam Tables.

VP_1 = PZR specific volume of water at Final pressure from ASME Steam Tables.

LV_0 = Initial VCT level, in inches.

LV_1 = Final VCT level, in inches.

ATTACHMENT 3

RCS LEAK RATE CALCULATION WORKSHEET

INITIALS

4. ALTERNATE MANUAL CALCULATION (6.3.C)
(Shutdown Cooling with 2 HXs)

$$\text{GROSS RCS LEAKAGE } (FT^3) = 179.8\left[\frac{(V_1 - V_\emptyset)}{V_1\ V_\emptyset}\right] + \left[\frac{(MU - DIV)}{7.48\emptyset5}\right] - \left[3.61(LV_1 - LV_\emptyset)\right] - \emptyset.\emptyset673\left[\frac{LP_1}{VP_1} - \frac{LP_\emptyset}{VP_\emptyset}\right]$$

$$\frac{\quad}{(FT^3)} = 179.8\left[\frac{(__ - __)}{(__ \times __)}\right] + \left[\frac{(__ - __)}{7.48\emptyset5}\right] - \left[3.61\ (__ - __)\right] - \emptyset.\emptyset673\left[__ - __\right]$$

ATTACHMENT 3

RCS LEAK RATE CALCULATION WORKSHEET

INITIALS

Where:

V_0 = RCS specific volume at Initial pressure and temperature from ASME Steam Tables.

V_1 = RCS specific volume at Final pressure and temperature from ASME Steam Tables.

M/U = Makeup, in gallons. (RCS M/U plus BA M/U)

DIV = Letdown diverted, in gallons; including RWT M/U.

LP_0 = Initial pressurizer level, in inches.

LP_1 = Final pressurizer level, in inches.

VP_0 = PZR specific volume of water at Initial pressure from ASME Steam Tables.

VP_1 = PZR specific volume of water at Final pressure from ASME Steam Tables.

LV_0 = Initial VCT level, in inches.

LV_1 = Final VCT level, in inches.

ATTACHMENT 3

RCS LEAK RATE CALCULATION WORKSHEET

INITIALS

5. **CONVERT** the Gross RCS Leakage to GPM by the following equations: (N/A equation not used)

   a. For time intervals of twenty four (24) hours use:

   _____ FT^3 x (5.195×10^{-3}) = _____ GPM _____

   b. For time intervals other than twenty four (24) hours use:

   $$\frac{_____\ FT^3}{_____\ Hrs.\ time} \times (0.1247) = _____\ GPM$$ _____

6. **RECORD** in GROSS LKG column on ATTACHMENT 1 or ATTACHMENT 2. _____

ATTACHMENT 4

RCDT, SIT, VLV, QT, RWT, CHG PP AND S/G CALCULATION WORKSHEET

INITIALS

A. PROCEDURE

Date: _____ Time: _____

1. This attachment to be used in conjunction with the procedure when RCDT, SIT, VLV, QT, RWT(if the Unit is on Shutdown Cooling) and CHG PP leakage calculations are required to document actual performance of the test.

2. Any additional calculations required shall be performed on facsimiles of this attachment and attached to the procedure for review and documentation **PER** Section 9.0.

3. Calculation(s) **NOT** required to be performed by this procedure shall be marked N/A in the initials block(s).

B. RCDT LKG (6.4)

1. RCDT Initial LVL: _____ in; Time: _____
   Final LVL: _____ in; Time: _____

2. RCDT VOL (GAL): _____ - _____ = _____ GAL
   (Final) (Initial) (Total)

3. RCDT LKG: _____ ÷ _____ = _____ GPM
   (Total) (Time-min) (RCDT LKG) _____

C. SIT LKG (6.5)

1. SIT Start Time _____; SIT Stop Time _____

   $$\text{SIT LKG} = \frac{\text{(TOTAL SIT LVL DECREASE) x 40 GAL/IN}}{\text{TIME (min)}}$$

2. SIT LKG =(____) x 40 GAL/IN= _____ GPM
   _____ (min) (SIT LKG) _____

D. RCS VLV LKG (6.0.H)

1. _____ - _____ = _____ GPM
   (RCDT LKG) (SIT LKG) (VLV LKG)
   (SECT B) (SECT C) _____

E. NET LKG (6.0.I)

1. _____ - _____ = _____ GPM
   (GROSS LKG) (VLV LKG) (NET LKG)
   (ATT 1 OR 2) (SECT D) _____

ATTACHMENT 4

RCDT, SIT, VLV, QT, RWT, CHG PP AND S/G CALCULATION WORKSHEET

INITIALS

F. QT LKG (6.6)

1. QT Initial LVL: _____ in; Time: _____
   PRESS: _____

   Final LVL: _____ in; Time: _____

2. QT VOL (GAL): _____ - _____ = _____ GAL
   (Final) (Initial) (Total)

3. QT LKG: _____ ÷ _____ = _____ GPM
   (Total) (Time-min) (QT LKG) _____

G. NET LKG (6.0.K)

1. _____ - _____ - _____ = _____ GPM
   (GROSS LKG) (VLV LKG) (QT LKG) (NET LKG)
   (ATT 1 OR 2) (SECT D) (SECT F) _____

H. RWT LKG (6.7)(if the Unit is on Shutdown Cooling)

1. RWT Initial LVL: _____ in; Time: _____

   Final LVL: _____ in; Time: _____

2. RWT LVL INCREASE: _____ - _____ = _____ in
   (Final) (Initial) (Total)

3. RWT LKG = (TOTAL RWT LVL INCREASE) x 842 GAL/in / TIME (min)

   RWT LKG = (____) x 842 GAL/in / _____ (min) = _____ GPM
   (RWT LKG) _____

I. NET LKG (6.0.M)(if the Unit is on Shutdown Cooling)

1. _____ - _____ - _____ - _____ = _____ GPM
   (GROSS LKG) (VLV LKG) (QT LKG) (RWT LKG) (NET LKG)
   (ATT 1 OR 2) (SECT D) (SECT F) (SECT H) _____

J. S/G LKG (6.0.O)

1. NET LKG _____ GPM: From Section G **OR** if the Unit is on Shutdown Cooling Section I.

2. S/G LKG - _____ GPM: From procedure Step 6.0.N.

3. _____ - _____ = _____ GPM
   (J.1) (J.2) (NET LKG) _____

ATTACHMENT 4

RCDT, SIT, VLV, QT, RWT, CHG PP AND S/G CALCULATION WORKSHEET

INITIALS

K. CHG PP LKG (6.0.P)

1. NET LKG _____ GPM: From Section J.

2. CHG PP LKG - _____ GPM: From procedure Step 6.0.P.

3. _____ - _____ = _____ GPM
(K.1) (K.2) (* NET LKG)

* Record in NET LKG column ATT 1 OR 2; IF > 1.0, **NOTIFY** CRS and **IMPLEMENT** AOP-2A. _____

L. REACTOR COOLANT SYSTEM LEAKRATE TRENDING (6.0.R)

NOTE
N/A values **NOT** used.

1. **SUBTRACT** ALL used values from the GROSS LKG value. _____

_____	- _____	- _____	- _____	- _____	- _____
(GROSS LKG)	(VLV LKG)	(QT LKG)	(RWT LKG)	(S/G LKG)	(CHG PP LKG)
(ATT 1 OR 2)	(SECT D)	(SECT F)	(SECT H)	(SECT J)	(SECT K)

= _____ GPM
(NET LKG)

M. CALCULATION VERIFICATION

1. Checked by: _____/ _____
Date

CALVERT CLIFFS NUCLEAR POWER PLANT
SURVEILLANCE TEST PROCEDURE
UNIT TWO

STP O-27-2

REACTOR COOLANT SYSTEM LEAKAGE EVALUATION

REVISION 18

SAFETY RELATED

CONTINUOUS USE

Approval Authority: Chris Jones
Signature/Date

Effective Date: 12/16/2008

SURVEILLANCE TEST PROCEDURES ADDITIONAL COVER SHEET INFORMATION

A. **Test Performance**

Permission to perform test: _____ / _____
Shift Manager Date

B. **Test completion, results review and approval** (Circle appropriate answer)

Accept. Criteria in spec?	YES NO N/A	Adjustments made?	YES NO N/A
As found results in spec?	YES NO N/A	CR submitted?	YES NO N/A
As left results in spec?	YES NO N/A	Malfunctions indicated?	YES NO N/A

REMARKS: _____

Test completed by: _____ / _____
Date

Analysis of results: _____

Shift Manager review: _____ / _____
Date

Analysis/Comments: _____

Functional Surveillance
Test Coordinator: _____ Date: _____

EQSE (if required): _____ Date: _____

* PORC Meeting No.: _____ Date: _____

* Plant General Manager: _____ Date: _____

* Required only if completed test on SR and designated NSR structures, systems and components (per Q List) identified a malfunction or were out of specification.

Attach a separate sheet, if necessary, to document additional comments.

TABLE OF CONTENTS

TITLE	PAGE
1.0 PURPOSE	5
2.0 APPLICABILITY/SCOPE	5
3.0 REFERENCES	5
4.0 PREREQUISITES	6
5.0 PRECAUTIONS	7
6.0 PERFORMANCE	8
6.1 RCS LEAK RATE: PC PROGRAM	18
6.2 RCS LEAK RATE: MANUAL CALCULATION	19
6.3 RCS LEAK RATE: ALTERNATE MANUAL CALCULATION	20
6.4 RCDT INLEAKAGE CALCULATION	24
6.5 SAFETY INJECTION TANK OUTLEAKAGE	25
6.6 QUENCH TANK INLEAKAGE	26
6.7 RWT INLEAKAGE	27
6.8 ACCEPTANCE CRITERIA	28
7.0 POST PERFORMANCE ACTIVITIES	29
8.0 BASES	29
9.0 RECORDS	29
TABLE 1 RCS SPECIFIC VOLUME (V_f) AT 2250 PSIA	30
TABLE 2 RCDT LEVEL CONVERSION	31
TABLE 3 QUENCH TANK LEVEL CONVERSION	32
ATTACHMENT 1 RCS LEAK RATE DATA SHEET	33
ATTACHMENT 2 RCS LEAK RATE DATA SHEET: SUPPLEMENTAL	47
ATTACHMENT 3 RCS LEAK RATE CALCULATION WORKSHEET	49
ATTACHMENT 4 RCDT, SIT, VLV, QT, RWT, CHG PP AND S/G CALCULATION WORKSHEET	59

LIST OF EFFECTIVE PAGES

PAGE NUMBERS	REVISION
1-61	18

PROCEDURE ALTERATIONS

PAGE NUMBERS	REVISION/CHANGE
10	01801

1.0 PURPOSE

A. To provide a means of determining the amount and source of leakage from the Reactor Coolant System to ensure the limits as set in the Technical Specifications are not exceeded. **[B0441] [B0660]**

> **NOTE**
> The industry standard normalizes leakrate to 70° F. This procedure normalizes leakrate to 120° F, which is minimally conservative with respect to the industry standard.

B. To provide a means of Reactor Coolant System leakrate trending for the detection and prevention of unidentified leakage below the limits of the Technical Specifications. **[B2474]**

2.0 APPLICABILITY/SCOPE

A. Performance of this STP, in conjunction with CP-236, SPECIFICATION AND SURVEILLANCE, PRIMARY-TO SECONDARY LEAKS, satisfies TS SR 3.4.13.1 and the action requirements of TS 3.4.14.A.1 and 3.4.14.B.1.2.

B. RCS leak rate manual calculations shall be performed on ATTACHMENT 3, RCS LEAK RATE CALCULATION WORKSHEET. RCDT, SIT, VLV, QT, RWT, CHG PP and S/G leakage calculations shall be performed on ATTACHMENT 4, RCDT, SIT, VLV, QT, RWT, CHG PP AND S/G CALCULATION WORKSHEET. Additional calculations shall be performed on facsimiles of ATTACHMENT 3 or ATTACHMENT 4 and attached to this procedure for review and documentation **PER** Section 9.0.

C. **IF** performing this STP for other than scheduled surveillances, **THEN** indicate the reason(s) for being performed in the Remarks section below. Include any MO and CR numbers applicable, along with the date and time performed.

Remarks:_____
_____
_____
_____
_____

3.0 REFERENCES

A. Procedures

1. AOP-2A, Excessive Reactor Coolant Leakage.
2. OI-1B, Quench Tank Operations.
3. OI-2A, Chemical and Volume Control System.
4. OI-2B, CVCS Boration, Dilution and Makeup Operations.

3.0.A Procedures (Continued)

5. EN-4-104, Surveillance Testing.

6. CNG-HU-1.01-1001, Human Performance Tools and Verification Practices.

B. Codes and Standards

1. ASME Steam Tables.

2. Technical Specifications.

4.0 PREREQUISITES

INITIALS

A. Unit 2 is in Mode 1-4 at steady state conditions.

B. RCS Pressure is greater than 100 PSIA. **[B0441]**

C. A steam bubble exists in the pressurizer and level is being maintained between 133 and 225 inches.

D. Charging and Letdown is in operation.

E. Zinc injection is **NOT** in progress during Gross RCS Leakage (GROSS LKG) data collection.

> **NOTE**
> The following conditions are **NOT** a requirement for the Technical Specification leakage evaluation.

F. None of the following are planned during the expected duration of Gross RCS Leakage (GROSS LKG) data collection: **[B2474]**

- RCS makeup from any source
- CVCS diversion
- Sampling of the RCS or CVCS
- Chemical addition to the RCS or CVCS

G. **IF** the Unit is on Shutdown Cooling,
THEN Shutdown Cooling alignment changes shall **NOT** be made for the duration of data collection. **[B0441]**

H. Administrative Requirements:

1. **PERFORM** a pretest page check of this STP. _____

5.0 PRECAUTIONS

A. The Reactor Coolant System (RCS) leak rate shall be observed to be in accordance with TS 3.4.13.

B. **IF** T_{AVG} is less than 530° F **OR** PZR pressure is less than 2200 PSIA, **THEN** the Alternate Manual Calculation Section 6.3 must be used.

C. Reactor Coolant System leakrate trending should be performed daily, during steady state conditions, and within 12 hours of reaching steady state conditions if **NOT** performed in the previous 72 hours. **[B2474]**

D. This procedure has been reviewed for Risk Based Verification Practices. No specific steps were identified. The SM, CRS, or any other person involved with the task may designate steps requiring the use of Verification Practices.

6.0 PERFORMANCE

NOTE

The daily RCS Leakage Evaluation of Gross RCS Leakage (GROSS LKG) shall be a 2 hour evaluation. The time of performance may be adjusted ±1 hour for operational concerns. Performance at other than 2300 to 0100 shall be noted in the Comment section of ATTACHMENT 1.

A. **IF** performing the daily RCS Leakage Evaluation,
THEN DAILY at 2300 **AND** the following 0100, **RECORD** the following parameters on ATTACHMENT 1:

1. T_{AVG} (T_{COLD} may be used from a loop with an operating reactor coolant pump when Tavg is less than 530° F **OR** temperature FROM RCS on 2-TR-351 when the Unit is on Shutdown Cooling)

2. RC makeup integrator reading.

3. Boric Acid integrator reading.

4. Diversion integrator reading.

5. Volume Control Tank level.

6. Pressurizer pressure. (PI-105 or PI-103/103-1 should be used when PZR pressure less than 1600 PSIA)

7. Pressurizer level.

NOTE

Supplemental RCS Leakage Evaluations of Gross RCS Leakage (GROSS LKG) shall be run for a minimum of one hour and should be run for two hours.

B. **IF NOT** performing the daily RCS leakage Evaluation,
THEN RECORD initial and final Step A parameters on ATTACHMENT 2 **AND RECORD** for each day used:

1. The day and time in the DAY/TIME column.

2. The reason(s) for using ATTACHMENT 2 in the Comments section.

3. On ATTACHMENT 1, that the leakrate was calculated on ATTACHMENT 2.

C. **RECORD** the day and amount of RWT makeup completed during the duration of Gross RCS Leakage (GROSS LKG) data collection in the RWT M/U DAY/AMT column on the appropriate page of ATTACHMENT 1 or ATTACHMENT 2.

6.0 PERFORMANCE (Continued)

D. **IF** instrumentation other than those indicated on ATTACHMENT 1 or ATTACHMENT 2 are used,
THEN RECORD the instrument(s) used in the Comment section on the applicable page.

E. **IF** performing Reactor Coolant System leakrate trending,
AND ANY of the following occur during Gross RCS Leakage (GROSS LKG) data collection:

- CVCS diversion to RCW
- Fast Boration to the RCS
- Initial and final values of T_{AVG} differ by greater than 0.5° F
- Initial and final Reactor Power differs by greater than 0.1%

THEN a new set of initial and final data must be taken and leakrate performed on ATTACHMENT 2. Note this in the Comment section of ATTACHMENT 1 or ATTACHMENT 2.

F. **IF NOT** performing Reactor Coolant System leakrate trending,
AND Fast Boration to the RCS is performed during Gross RCS Leakage (GROSS LKG) data collection,
THEN the amount of makeup to the RCS must be estimated and added to the total makeup **OR** a new set of initial data must be taken and leakrate performed on ATTACHMENT 2. Note this in the Comment section of ATTACHMENT 1 or ATTACHMENT 2.

6.0 PERFORMANCE (Continued)

NOTE
All leakage values in this procedure shall be recorded as calculated, positive **OR** negative. 01801

G. **CALCULATE** Gross RCS Leakage (GROSS LKG) **PER** Section 6.1, 6.2 **OR** 6.3.

1. **IF** the GROSS LKG is greater than 11 GPM,
THEN IMPLEMENT AOP-2A.

2. **IF** the GROSS LKG is greater than 1.0 GPM,
THEN PERFORM Steps H through I.

3. **IF** the GROSS LKG is less than or equal to 1.0 GPM,
AND NOT performing Reactor Coolant System leakrate trending,
THEN:

NOTE
The NET LKG value should be rounded to the nearest one-hundredth GPM.

a. **RECORD** the GROSS LKG value in the NET LKG column
AND MARK N/A the RCDT LKG, SIT LKG, VLV LKG, QT LKG, RWT LKG, S/G LKG and CHG PP LKG columns on ATTACHMENT 1 or ATTACHMENT 2.

b. **PROCEED** to Step 6.0.S.

4. **IF** the GROSS LKG is less than or equal to 1.0 GPM,
AND performing Reactor Coolant System leakrate trending,
THEN PERFORM Steps H through Q as desired to achieve a value below those specified in Step 6.0.V.3.

H. **CALCULATE** the RCS Valve Leakage (VLV LKG) as follows:

1. **CALCULATE** the Reactor Coolant Drain Tank inleakage (RCDT LKG) **PER** Section 6.4.

2. **CALCULATE** the Safety Injection Tank outleakage (SIT LKG) to the RCDT **PER** Section 6.5.

3. **SUBTRACT** the SIT LKG from RCDT LKG column on ATTACHMENT 1 or ATTACHMENT 2, showing calculations on ATTACHMENT 4.

4. **RECORD** the results in the VLV LKG column on ATTACHMENT 1 or ATTACHMENT 2.

6.0 PERFORMANCE (Continued)

I. **IF** the GROSS LKG is greater than 1.0 GPM,
THEN SUBTRACT the VLV LKG from GROSS LKG column on ATTACHMENT 1 or ATTACHMENT 2 showing calculations on ATTACHMENT 4.

1. **IF** the result is less than or equal to 1.0 GPM,
THEN:

NOTE
The NET LKG value should be rounded to the nearest one-hundredth GPM.

a. **RECORD** the value in the NET LKG column **AND MARK** N/A in the QT LKG, RWT LKG and CHG PP LKG column on ATTACHMENT 1 or ATTACHMENT 2.

b. **PROCEED** to Step 6.0.S.

2. **IF** the result is greater than 1.0 GPM,
THEN PERFORM Steps J through K.

J. **CALCULATE** the Quench Tank Inleakage from the PORV and Code Safety Valves **PER** Section 6.6.

K. **IF** the GROSS LKG minus VLV LKG is greater than 1.0 GPM,
THEN CALCULATE the NET LKG showing calculations on ATTACHMENT 4 as follows:

1. **SUBTRACT** the QT LKG,and VLV LKG columns from the GROSS LKG column on ATTACHMENT 1 or ATTACHMENT 2.

a. **IF** the result is less than or equal to 1.0 GPM,
THEN:

NOTE
The NET LKG value should be rounded to the nearest one-hundredth GPM.

- **RECORD** the value in the NET LKG column **AND MARK** N/A in the CHG PP LKG column on ATTACHMENT 1 or ATTACHMENT 2.
- **PROCEED** to Step 6.0.S.

b. **IF** the result is greater than 1.0 GPM, **AND** the Unit is **NOT** on Shutdown Cooling,
THEN PERFORM Steps N through O.

c. **IF** the result is greater than 1.0 GPM, **AND** the Unit is on Shutdown Cooling,
THEN PERFORM Steps L through M.

6.0 PERFORMANCE (Continued)

L. **IF** the Unit is on Shutdown Cooling,
THEN CALCULATE the RWT Inleakage **PER** Section 6.7.

M. **IF** the NET LKG in Step 6.0.K is greater than 1.0 GPM,
THEN CALCULATE the NET LKG showing calculations on ATTACHMENT 4 as follows:

1. **SUBTRACT** the QT LKG, VLV LKG and RWT LKG columns from the GROSS LKG column on ATTACHMENT 1 or ATTACHMENT 2.

a. **IF** the result is less than or equal to 1.0 GPM,
THEN:

NOTE
The NET LKG value should be rounded to the nearest one-hundredth GPM.

- **RECORD** the value in the NET LKG column **AND MARK** N/A in the CHG PP LKG column on ATTACHMENT 1 or ATTACHMENT 2.
- **PROCEED** to Step 6.0.S.

b. **IF** the result is greater than 1.0 GPM,
THEN PERFORM Steps N through O.

N. **RECORD** Chemistry's calculated Steam Generator Leakage value from CP-236 in the S/G LKG column of ATTACHMENT 1 or ATTACHMENT 2 **AND** in ATTACHMENT 4.J.2.

6.0 PERFORMANCE (Continued)

O. **IF** NET LKG in Step 6.0.K is greater than 1.0 GPM
OR if the Unit is on Shutdown Cooling Step and NET LKG in Step 6.0.M is greater than 1.0 GPM,
THEN SUBTRACT the Steam Generator Leakage (S/G LKG) from the NET LKG in Step 6.0.K **OR** if the Unit is on Shutdown Cooling Step 6.0.M, showing calculations on ATTACHMENT 4.

1. **IF** the result is less than or equal to 1.0 GPM,
THEN:

NOTE
The NET LKG value should be rounded to the nearest one-hundredth GPM.

a. **RECORD** the value in the NET LKG column **AND MARK** N/A CHG PP LKG column on ATTACHMENT 1 or ATTACHMENT 2.

b. **NOTE** in the Comment section that the steam generator primary to secondary leakage was used to calculate the unidentified leakage criteria.

c. **PROCEED** to Step 6.0.S.

2. **IF** the result is greater than 1.0 GPM,
THEN PERFORM steps P through Q.

WARNING
IF the GROSS LKG is less than or equal to 1.0 GPM,
AND performing Reactor Coolant System leakrate trending,
THEN due to dose considerations, CHG PP packing leakage should only be calculated once per 7 days with known leakage, **OR** any time the RCS Gross Leakrate has risen by greater than one Standard Deviation.

P. **CALCULATE** CHG PP LKG by performing DETERMINING CHARGING PUMP PACKING LEAKAGE **PER** OI-2A, **AND RECORD** the value on ATTACHMENT 1 or ATTACHMENT 2.

6.0 PERFORMANCE (Continued)

NOTE
The CHG PP LKG value is not part of the PC program for RCS Leakage determination. Therefore, the value must be manually subtracted from the calculation, when used, for Net RCS leakage.

Q. **IF** NET LKG in Step 6.0.O is greater than 1.0 GPM,
THEN SUBTRACT the CHG PP LKG from the NET LKG showing the calculations on ATTACHMENT 4.

1. **IF** the result is less than or equal to 1.0 GPM,
THEN:

NOTE
The NET LKG value should be rounded to the nearest one-hundredth GPM.

a. **RECORD** the value in the NET LKG column on ATTACHMENT 1 or ATTACHMENT 2.

b. **NOTE** in the Comment section that Charging Pump Packing Leakage was used to calculate the unidentified leakage criteria.

c. **PROCEED** to step 6.0.S.

2. **IF** the result is greater than 1.0 GPM,
THEN:

NOTE
The NET LKG value should be rounded to the nearest one-hundredth GPM.

a. **RECORD** the value in the NET LKG column on ATTACHMENT 1 or ATTACHMENT 2.

b. **NOTIFY** the CRS immediately.

c. **IMPLEMENT** AOP-2A, EXCESSIVE REACTOR COOLANT LEAKAGE, in conjunction with the completion of this procedure.

6.0 PERFORMANCE (Continued)

NOTE
The CHG PP LKG value is not part of the PC program for RCS Leakage determination. Therefore, the value must be manually subtracted from the calculation, when used, for Net RCS leakage.

R. **IF** NET LKG is less than or equal to 1.0 GPM,
AND performing Reactor Coolant System leakrate trending,
THEN SUBTRACT ALL used values from the GROSS LKG value showing the calculations on ATTACHMENT 4.

NOTE
The NET LKG value should be rounded to the nearest one-hundredth GPM.

1. **RECORD** the value in the NET LKG column on ATTACHMENT 1 or ATTACHMENT 2.

S. Person performing the calculations shall initial or sign the PERF INIT column on ATTACHMENT 1, ATTACHMENT 2, ATTACHMENT 3, or ATTACHMENT 4 as applicable.

T. A verification of the calculations shall be performed and indicate all calculations are correct by initialing or signing the VERF INIT column on ATTACHMENT 1, ATTACHMENT 2, ATTACHMENT 3 or ATTACHMENT 4, as applicable.

U. An SRO, other than one that had performed the verification, shall perform a review of the STP following the verification. This review shall include, but is not limited to, the following:

- Verifying the applicable sections or attachments have been completed correctly and second checked.
- Verifying the leak rate is within reason and comparable to the last leak rate completed.
- Verifying the leak rate satisfies the Acceptance Criteria of Section 6.8.

6.0 PERFORMANCE (Continued)

V. **IF** performing Reactor Coolant System leakrate trending,
THEN PERFORM the following: **[B2474]**

> **NOTE**
> The NET LKG value should be rounded to the nearest one-hundredth GPM.

1. **RECORD** ALL values used in the RCS Leak Rate Data Base.

> **NOTE**
> - These values are obtained from the RCS Leak Rate Data Base. If the data base is unavailable, the values are recorded here for reference.
> - This step should be done on the first performance of the STP. Subsequent performances should verify the current values have been recorded.

2. **RECORD** current values:

   Baseline Mean (μ): _____ GPM

   Standard Deviation (σ): _____ GPM

   - **IF** the values change,
     THEN RECORD the new values
     AND the date changed:

     Baseline Mean (μ): _____ GPM Date: _____

     Standard Deviation (σ): _____ GPM Date: _____

6.0.V PERFORMANCE (Continued)

3. **IF** ANY of the following conditions exist:

   - The 7 day rolling average Unidentified RCS Leakrate is greater than 0.1 GPM.
   - 9 consecutive daily Unidentified RCS Leakrates are greater than the Baseline Mean.
   - Daily Unidentified RCS Leakrate greater than 0.3 GPM.
   - 2 consecutive daily Unidentified RCS Leakrates greater than 0.15 GPM.
   - Daily Unidentified RCS Leakrate greater than Baseline Mean plus 3 times Standard Deviation ($\mu + 3\sigma$).
   - 2 of 3 consecutive daily Unidentified RCS Leakrates greater than Baseline Mean plus 2 times Standard Deviation ($\mu + 2\sigma$).

   THEN PROCEED to OI-1A, Reactor Coolant System and Pump Operations, Section titled HIGH RCS LEAKAGE.

6.1 RCS LEAK RATE: PC PROGRAM

A. **IF** RCS pressure is 2200 to 2300 PSIA
AND T_{AVG} is greater than or equal to 530 ° F,
THEN PERFORM the following:

1. **CALCULATE** the Gross RCS Leakage, normalized to 120 ° F, by using the RCS Leak Rate Program.

2. **ENTER** the data from ATTACHMENT 1 **OR** ATTACHMENT 2 as prompted by the Leakrate program.

3. **RECORD** the result in the GROSS LKG column on ATTACHMENT 1 **OR** ATTACHMENT 2.

6.2 RCS LEAK RATE: MANUAL CALCULATION

A. **CALCULATE** the Gross RCS Leakage normalized to 120° F by use of the following equation showing calculations on ATTACHMENT 3 **IF**:

1. RCS pressure is 2200 PSIA to 2300 PSIA **AND**:

2. T_{AVG} is greater than or equal to 530° F.

$$\text{GROSS RCS LEAKAGE } (FT^3) = 155.1\left[\frac{(V_1 - V_0)}{V_1 V_0}\right] + \left[\frac{(MU - DIV)}{7.4805}\right] - \left[2.493(LP_1 - LP_0)\right] - \left[3.61(LV_1 - LV_0)\right]$$

Where:

V_0 = RCS specific volume at initial T_{AVG} from TABLE 1.

V_1 = RCS specific volume at final T_{AVG} from TABLE 1.

M/U = Makeup, in gallons. (RCS M/U plus BA M/U)

DIV = Letdown diverted, in gallons; including RWT M/U.

LP_0 = Initial pressurizer level, in inches.

LP_1 = Final pressurizer level, in inches.

LV_0 = Initial VCT level, in inches.

LV_1 = Final VCT level, in inches.

B. **CHANGE** the Gross RCS Leakage to GPM by using one of the following equations showing calculations on ATTACHMENT 3:

1. **IF** the time interval is two (2) hours,
THEN USE: $GPM = FT^3 \times (6.235 \times 10^{-2})$

2. **IF** the time interval is other than two (2) hours,
THEN USE: $GPM = \frac{FT^3}{t} \times (0.1247)$

Where:

FT^3 = Gross RCS Leakage from Step A.
t = Time, in hours, between data sets.

C. **RECORD** the value in the GROSS LKG column on ATTACHMENT 1 or ATTACHMENT 2.

6.3 RCS LEAK RATE: ALTERNATE MANUAL CALCULATION

A. **IF** the Unit is **NOT** on Shutdown Cooling,
THEN CALCULATE the Gross RCS Leakage normalized to 120° F by use of the following equation showing calculations on ATTACHMENT 3 **IF**:

1. RCS pressure is less than 2200 PSIA **OR**:

2. T_{AVG} is less than 530° F.

$$\text{GROSS RCS LEAKAGE (FT}^3\text{)} = 155.1\left[\frac{(V_1 - V_0)}{V_1\ V_0}\right] + \left[\frac{(MU - DIV)}{7.4805}\right] - \left[3.61(LV_1 - LV_0)\right] - 0.0673\left[\frac{LP_1}{VP_1} - \frac{LP_0}{VP_0}\right]$$

Where:

V_0 = RCS specific volume at initial pressure and temperature from ASME Steam Tables.

V_1 = RCS specific volume at final pressure and temperature from ASME Steam Tables.

M/U = Makeup, in gallons. (RCS M/U plus BA M/U)

DIV = Letdown diverted, in gallons; including RWT M/U.

LP_0 = Initial pressurizer level, in inches.

LP_1 = Final pressurizer level, in inches.

VP_0 = PZR specific volume of water at initial pressure from ASME Steam Tables.

VP_1 = PZR specific volume of water at final pressure from ASME Steam Tables.

LV_0 = Initial VCT level, in inches.

LV_1 = Final VCT level, in inches.

6.3 RCS LEAK RATE: ALTERNATE MANUAL CALCULATION (Continued)

B. **IF** the Unit is on Shutdown Cooling,
THEN CALCULATE the Gross RCS Leakage normalized to 120° F by use of the following equation showing calculations on ATTACHMENT 3 **IF**:

1. One Shutdown Cooling Heat Exchanger is in service with RCS flow.

$$\text{GROSS RCS LEAKAGE } (FT^3) = 169.3\left[\frac{(V_1 - V_0)}{V_1\ V_0}\right] + \left[\frac{(MU - DIV)}{7.4805}\right] - \left[3.61(LV_1 - LV_0)\right] - 0.0673\left[\frac{LP_1}{VP_1} - \frac{LP_0}{VP_0}\right]$$

Where:

V_0 = RCS specific volume at initial pressure and temperature from ASME Steam Tables.

V_1 = RCS specific volume at final pressure and temperature from ASME Steam Tables.

M/U = Makeup, in gallons. (RCS M/U plus BA M/U)

DIV = Letdown diverted, in gallons; including RWT M/U.

LP_0 = Initial pressurizer level, in inches.

LP_1 = Final pressurizer level, in inches.

VP_0 = PZR specific volume of water at initial pressure from ASME Steam Tables.

VP_1 = PZR specific volume of water at final pressure from ASME Steam Tables.

LV_0 = Initial VCT level, in inches.

LV_1 = Final VCT level, in inches.

6.3 RCS LEAK RATE: ALTERNATE MANUAL CALCULATION (Continued)

C. **IF** the Unit is on Shutdown Cooling,
THEN CALCULATE the Gross RCS Leakage normalized to 120° F by use of the following equation showing calculations on ATTACHMENT 3 **IF**:

1. Two Shutdown Cooling Heat Exchangers are in service with RCS flow.

$$\text{GROSS RCS LEAKAGE (FT}^3\text{)} = 179.8\left[\frac{(V_1 - V_0)}{V_1\ V_0}\right] + \left[\frac{(MU - DIV)}{7.4805}\right] - \left[3.61(LV_1 - LV_0)\right] - 0.0673\left[\frac{LP_1}{VP_1} - \frac{LP_0}{VP_0}\right]$$

Where:

V_0 = RCS specific volume at initial pressure and temperature from ASME Steam Tables.

V_1 = RCS specific volume at final pressure and temperature from ASME Steam Tables.

M/U = Makeup, in gallons. (RCS M/U plus BA M/U)

DIV = Letdown diverted, in gallons; including RWT M/U.

LP_0 = Initial pressurizer level, in inches.

LP_1 = Final pressurizer level, in inches.

VP_0 = PZR specific volume of water at initial pressure from ASME Steam Tables.

VP_1 = PZR specific volume of water at final pressure from ASME Steam Tables.

LV_0 = Initial VCT level, in inches.

LV_1 = Final VCT level, in inches.

6.3 RCS LEAK RATE: ALTERNATE MANUAL CALCULATION (Continued)

D. **CHANGE** the Gross RCS Leakage to GPM by using one of the following equations showing calculations on ATTACHMENT 3:

1. **IF** the time interval is two (2) hours,
   THEN USE: $GPM = FT^3 \times (6.235 \times 10^{-2})$

2. **IF** the time interval is other than two (2) hours,
   THEN USE: $GPM = \frac{FT^3}{t} \times (0.1247)$

   Where:

   FT^3 = Gross RCS Leakage from Step A.
   t = Time, in hours, between data sets.

E. **RECORD** the value in the GROSS LKG column on ATTACHMENT 1 or ATTACHMENT 2.

6.4 RCDT INLEAKAGE CALCULATION

A. The following alignment must be verified or performed to complete the leakage calculation:

1. 21 RC DRN TK PP (2-HS-4259), off.
2. RCDT PP CNTMT ISOL, 2-RCW-4260-CV shut.
3. 21 RCDT DRN TO CNTMT FLOOR, 2-RCW-4258 shut.
4. Draining of the Quench Tank **NOT** in progress.
5. RCP controlled bleed-off is aligned to the VCT.
6. Draining from the RCS **NOT** in progress.
7. RCDT level pumped down to less than or equal to 15 inches.
8. SIT RECIRC TO RCDT, 2-SI-661-CV shut.
9. PASS return to RCDT, 2-PS-6529 (1C102) shut.

B. **OPEN** WGS CNTMT ISOLs, 2-WGS-2180-CV and 2-WGS-2181-CV.

C. **RECORD** the start time and initial RCDT level (in) on ATTACHMENT 4.

D. **ALLOW** the RCDT level to increase for six (6) hours **OR** until a level of 35 inches is attained.

E. **RECORD** the stop time and final RCDT level (in) on ATTACHMENT 4.

F. **SHUT** WGS CNTMT ISOLs, 2-WGS-2180-CV, and 2-WGS-2181-CV.

G. **USING** TABLE 2, **CONVERT** the RCDT levels recorded in Steps C and E into gallons **AND** showing calculations on ATTACHMENT 4, perform the following:

1. **SUBTRACT** the RCDT initial volume from the RCDT final volume to determine the total volume change.
2. **DIVIDE** the total volume change by the elapsed time in minutes between Steps C and E.
3. **RECORD** the result in the RCDT LKG column on ATTACHMENT 1 or ATTACHMENT 2.

6.5 SAFETY INJECTION TANK OUTLEAKAGE

A. **DETERMINE** the Safety Injection Tanks (SITs) leak rate from the Control Room Log Sheet as follows:

1. **RECORD** the start and stop times of the SIT LVL data on ATTACHMENT 4.

2. **CALCULATE** the sum Total SIT outleakage by using the RCS Leak Rate PC Program **OR** by using the following equation, showing calculations on ATTACHMENT 4:

$$\text{SIT LKG} = \frac{\text{(TOTAL SIT LVL DECREASE) x 40 GAL/IN}}{\text{TIME (in minutes)}}$$

B. **RECORD** the results in the SIT LKG column on ATTACHMENT 1 or ATTACHMENT 2.

6.6 QUENCH TANK INLEAKAGE

A. The following alignment must be verified or performed to complete the leakage calculation:

1. Draining of the Quench Tank (QT) **NOT** in progress.

2. DW CNTMT ISOL, 2-DW-5460-CV shut.

3. QT level approximately 28.5 inches **OR** low enough to support this test without exceeding 30.5 inches.

B. **RECORD** the start time, QT initial level and pressure on ATTACHMENT 4.

> **NOTE**
> Quench Tank pressure may be vented as necessary to limit pressure to less than 10 PSIG during the performance of the following step.

C. **AFTER** six (6) hours **OR** QT level rises to 30.5 inches, **THEN**:

1. **VENT** the QT pressure to the value recorded in Step B to the Waste Gas header by opening the following valves:

   a. QT Vent, 2-RC-400-CV

   b. U-2 CNTMT WG HDR HDR ISOL, 2-WGS-2180-CV

   c. U-2 CNTMT WG HDR HDR ISOL, 2-WGS-2181-CV

2. **RECORD** the stop time and QT final level on ATTACHMENT 4.

D. **USING** TABLE 3, **CONVERT** the QT levels recorded in Steps B and C.2 into gallons **AND** showing calculations on ATTACHMENT 4, perform the following:

1. **SUBTRACT** the QT initial volume from the QT final volume to determine the total volume change.

2. **DIVIDE** the total volume change by the elapsed time in minutes between Steps B and C.2.

3. **RECORD** the results in the QT LKG column on ATTACHMENT 1 or ATTACHMENT 2.

6.7 RWT INLEAKAGE

NOTE
No RWT makeup is permitted during RWT Inleakage rate data collection.

1. **IF** the Unit is on Shutdown Cooling,
   THEN DETERMINE the RWT Inleakage rate as follows:

   a. **RECORD** the start time and initial RWT level (in) on ATTACHMENT 4.

   b. **ALLOW** the RWT level to increase for six (6) hours. **[B0441]**

   c. **RECORD** the stop time and final RWT level (in) on ATTACHMENT 4.

   d. **CALCULATE** the sum Total RWT inleakage by using the following equation, showing calculations on ATTACHMENT 4:

$$\text{RWT LKG} = \frac{\text{(TOTAL RWT LVL INCREASE) x 842 GAL/in}}{\text{TIME (in minutes)}}$$

2. **RECORD** the results in the RWT LKG column on ATTACHMENT 1 or ATTACHMENT 2. (N/A the RWT LKG column if the Unit is **NOT** on Shutdown Cooling)

6.8 ACCEPTANCE CRITERIA

NOTE

- Performance of this section constitutes a supervisory review. Actual observation of equipment response by the SRO performing this review is not required. Being able to answer YES or N/A to a step signifies that the noted step has been completed and signed off by a qualified operator **other than the SRO reviewer** and that the actual equipment response is acceptable and valid.
- Verification of this section is denoted by the initialing of the applicable SRO Review block on ATTACHMENT 1 or ATTACHMENT 2.

A. The RCS Net Unidentified Leakage calculated and recorded on ATTACHMENT 1 or ATTACHMENT 2 is less than or equal to 1.0 GPM.

B. Total Identified Leakage (Gross LKG - Net LKG) less than or equal to 10 GPM.

C. The RCS leak rate calculation was completed satisfactorily in less than or equal to 72 hours since the last RCS leak rate calculation. (N/A if first leakrate calculation since shutdown)

D. The RCS leak rate calculation was completed satisfactorily in less than or equal to 24 hours since the last RCS leak rate calculation when required by TS 3.4.14.A.1 and 3.4.14.B.1.2.
(N/A if not required by TS 3.4.14)

E. This surveillance is considered satisfactory if YES or N/A can be answered in all steps above.

1. **IF** unsat,
THEN notify the SM, declare the affected equipment inoperable and take actions as required by Technical Specifications and administrative actions stated in EN-4-104.

2. **INITIATE** a Condition Report for any equipment deficiencies.

7.0 POST PERFORMANCE ACTIVITIES

INITIALS

A. **PERFORM** a post-test page check of this procedure. _____

8.0 BASES

[B0441] Engineering evaluation to provide numerical basis for STP O-027, ES199701028-001 (NEU 98-207)

[B0660] BGE credits STP-O-27-1/2 with discovery of: denting, wear, SCC/IGSCC/PWSCC of the SG HX tubes, and SCC of the RPV head seal leakage detection line. (License Renewal CT199700045 MS#9)

[B2474] WCAP-16465-NP, Pressurized Water Reactor Owners Group Standard RCS Leakage Action Levels and response Guidelines for Pressurized Water Reactors; WCAP-16423-NP, Pressurized Water Reactor Owners Group Standard Process and Methods for Calculating RCS Leak Rate for Pressurized Water Reactors; and OG-07-263 Recommendations for implementation of the above guidelines.

9.0 RECORDS

A. Records generated by this procedure shall be captured and controlled. Prior to transferring records to Document Management for retention, legibility and completeness of the record shall be verified by the transmitting organization.

B. Maintain records as defined in EN-4-104, Surveillance Testing.

TABLE 1

RCS SPECIFIC VOLUME (V_f) AT 2250 PSIA

TEMP °F	Vf	TEMP °F	Vf
530	0.02079	553	0.02143
531	0.02082	554	0.02146
532	0.02084	555	0.02149
533	0.02087	556	0.02152
534	0.02090	557	0.02155
535	0.02092	558	0.02158
536	0.02095	559	0.02161
537	0.02098	560	0.02165
538	0.02100	561	0.02168
539	0.02103	562	0.02171
540	0.02106	563	0.02174
541	0.02108	564	0.02178
542	0.02111	565	0.02181
543	0.02114	566	0.02184
544	0.02117	567	0.02187
545	0.02120	568	0.02191
546	0.02122	569	0.02194
547	0.02125	570	0.02197
548	0.02128	571	0.02201
549	0.02131	572	0.02204
550	0.02134	573	0.02208
551	0.02137	574	0.02211
552	0.02140	575	0.02215

TABLE 2

RCDT LEVEL CONVERSION

DEPTH(IN)	TO GAL	DEPTH(IN)	TO GAL	DEPTH(IN)	TO GAL
0.5	1.29	17.5	260.84	34.0	626.98
1.0	3.65	18.0	271.49	34.5	637.70
1.5	6.74	18.5	282.10	35.0	648.58
2.0	10.42	19.0	292.81	35.5	659.19
2.5	14.40	19.5	303.55	36.0	669.77
3.0	19.22	20.0	314.45	36.5	680.32
3.5	24.21	20.5	325.39	37.0	690.72
4.0	29.61	21.0	336.35	37.5	700.84
4.5	35.33	21.5	347.35	38.0	711.19
5.0	41.25	22.0	358.17	38.5	721.23
5.5	47.75	22.5	369.61	39.0	731.33
6.0	54.47	23.0	380.88	39.5	741.14
6.5	61.28	23.5	391.91	40.0	751.30
7.0	68.43	24.0	403.18	40.5	760.44
7.5	75.89	24.5	414.45	41.0	770.00
8.0	83.35	25.0	425.67	41.5	779.29
8.5	91.34	25.5	436.94	42.0	788.48
9.0	99.39	26.0	448.47	42.5	797.44
9.5	106.79	26.5	459.61	43.0	806.49
10.0	116.47	27.0	470.90	43.5	815.03
10.5	124.77	27.5	482.17	44.0	823.54
11.0	133.47	28.0	496.36	44.5	831.80
11.5	142.61	28.5	504.83	45.0	840.02
12.0	151.74	29.0	516.09	45.5	847.87
12.5	161.00	29.5	527.30	46.0	855.58
13.0	170.42	30.0	538.53	46.5	862.99
13.5	179.96	30.5	549.80	47.0	870.30
14.0	189.65	31.0	560.83	47.5	877.23
14.5	199.56	31.5	572.10	48.0	883.89
15.0	209.52	32.0	584.11	48.5	890.33
15.5	219.53	32.5	594.24	49.0	896.51
16.0	229.79	33.0	605.23	49.5	902.31
16.5	240.04	33.5	616.11	50.0	907.81
17.0	250.41				

TABLE 3

QUENCH TANK LEVEL CONVERSION

DEPTH(IN)	TO GAL	DEPTH(IN)	TO GAL	DEPTH(IN)	TO GAL
0.0	82.41	16.5	562.43	32.5	1122.87
0.5	93.02	17.0	579.71	33.0	1139.88
1.0	103.88	17.5	597.07	33.5	1156.71
1.5	115.01	18.0	614.41	34.0	1173.33
2.0	126.54	18.5	631.79	34.5	1189.72
2.5	138.52	19.0	649.26	35.0	1206.09
3.0	150.71	19.5	666.94	35.5	1222.22
3.5	163.18	20.0	684.51	36.0	1238.51
4.0	175.92	20.5	702.08	36.5	1254.36
4.5	188.99	21.0	719.73	37.0	1270.15
5.0	202.47	21.5	738.40	37.5	1285.67
5.5	216.03	22.0	755.27	38.0	1301.13
6.0	229.69	22.5	772.94	38.5	1316.50
6.5	243.89	23.0	790.68	39.0	1331.76
7.0	258.35	23.5	808.37	39.5	1346.39
7.5	272.84	24.0	826.25	40.0	1361.61
8.0	287.55	24.5	844.02	40.5	1375.66
8.5	302.44	25.0	861.76	41.0	1389.94
9.0	317.53	25.5	879.43	41.5	1403.87
9.5	332.78	26.0	897.13	42.0	1417.68
10.0	348.46	26.5	914.58	42.5	1431.13
10.5	364.06	27.0	932.59	43.0	1444.59
11.0	379.80	27.5	950.15	43.5	1457.51
11.5	395.77	28.0	967.72	44.0	1470.26
12.0	411.68	28.5	985.38	44.5	1482.57
12.5	428.26	29.0	1002.85	45.0	1494.91
13.0	444.63	29.5	1020.18	45.5	1506.62
13.5	461.09	30.0	1037.53	46.0	1518.39
14.0	477.70	30.5	1054.73	46.5	1529.15
14.5	494.60	31.0	1072.13	47.0	1539.93
15.0	511.43	31.5	1089.29	47.5	1550.32
15.5	528.32	32.0	1106.20	48.0	1560.30
16.0	545.36				

ATTACHMENT 1

RCS LEAK RATE DATA SHEET

DAY 1 THROUGH 5 - GROSS LEAK RATE DATA

MONTH: _____ YEAR: _____								
INST No.	XAT 011	2-FQI 210X	2-FQI 210Y	2-FQI 2540	L226	XAP 001	XVL 001	
DAY/ TIME	Tavg	MU INT READING	BA INT READING	DIVERT INT	VCT LVL	PZR PRESS	PZR LVL	GROSS LKG
2300								XXXXX
1 0100								
2300								XXXXX
2 0100								
2300								XXXXX
3 0100								
2300								XXXXX
4 0100								
2300								XXXXX
5 0100								

Comments: _____

ATTACHMENT 1

RCS LEAK RATE DATA SHEET

DAY 1 THROUGH 5 - MISCELLANEOUS LEAK RATE DATA

MONTH: _____ YEAR: _____

DAY/ TIME	RCDT LKG	SIT LKG	VLV LKG	QT LKG	RWT LKG	S/G LKG	CHG PP LKG	NET LKG	PERF INIT	VERF INIT
1 0100										
2 0100										
3 0100										
4 0100										
5 0100										

SRO Review: 1: _____ COMMENTS: _____
2: _____
3: _____ _____
4: _____
5: _____ _____

RWT M/U
DAY/AMT: ___/_____ _____
___/_____
___/_____ _____
___/_____
___/_____ _____

ATTACHMENT 1

RCS LEAK RATE DATA SHEET

DAY 6 THROUGH 10 - GROSS LEAK RATE DATA

MONTH: _____ YEAR: _____								
INST No.	XAT 011	2-FQI 210X	2-FQI 210Y	2-FQI 2540	L226	XAP 001	XVL 001	
DAY/ TIME	Tavg	MU INT READING	BA INT READING	DIVERT INT	VCT LVL	PZR PRESS	PZR LVL	GROSS LKG
2300								XXXXX
6 0100								
2300								XXXXX
7 0100								
2300								XXXXX
8 0100								
2300								XXXXX
9 0100								
2300								XXXXX
10 0100								

Comments: _____

ATTACHMENT 1

RCS LEAK RATE DATA SHEET

DAY 6 THROUGH 10 - MISCELLANEOUS LEAK RATE DATA

MONTH: _____ YEAR: _____

DAY/ TIME	RCDT LKG	SIT LKG	VLV LKG	QT LKG	RWT LKG	S/G LKG	CHG PP LKG	NET LKG	PERF INIT	VERF INIT
6 0100										
7 0100										
8 0100										
9 0100										
10 0100										

SRO Review: 6: _____ COMMENTS: _____
7: _____
8: _____ _____
9: _____
10: _____ _____

RWT M/U
DAY/AMT: ___/_____ _____
___/_____
___/_____ _____
___/_____
___/_____ _____

ATTACHMENT 1

RCS LEAK RATE DATA SHEET

DAY 11 THROUGH 15 - GROSS LEAK RATE DATA

MONTH: _____ YEAR: _____

INST No.	XAT 011	2-FQI 210X	2-FQI 210Y	2-FQI 2540	L226	XAP 001	XVL 001	
DAY/ TIME	Tavg	MU INT READING	BA INT READING	DIVERT INT	VCT LVL	PZR PRESS	PZR LVL	GROSS LKG
2300								XXXXX
11 0100								
2300								XXXXX
12 0100								
2300								XXXXX
13 0100								
2300								XXXXX
14 0100								
2300								XXXXX
15 0100								

Comments: _____

ATTACHMENT 1

RCS LEAK RATE DATA SHEET

DAY 11 THROUGH 15 - MISCELLANEOUS LEAK RATE DATA

MONTH: _____ YEAR: _____

DAY/ TIME	RCDT LKG	SIT LKG	VLV LKG	QT LKG	RWT LKG	S/G LKG	CHG PP LKG	NET LKG	PERF INIT	VERF INIT
11 0100										
12 0100										
13 0100										
14 0100										
15 0100										

SRO Review: 11: _____ COMMENTS: _____
12: _____
13: _____ _____
14: _____
15: _____ _____

RWT M/U
DAY/AMT: ___/_____ _____
___/_____
___/_____ _____
___/_____
___/_____ _____

ATTACHMENT 1

RCS LEAK RATE DATA SHEET

DAY 16 THROUGH 20 - GROSS LEAK RATE DATA

MONTH: _____ YEAR: _____

INST No.	XAT 011	2-FQI 210X	2-FQI 210Y	2-FQI 2540	L226	XAP 001	XVL 001	
DAY/ TIME	Tavg	MU INT READING	BA INT READING	DIVERT INT	VCT LVL	PZR PRESS	PZR LVL	GROSS LKG
2300								XXXXX
16 0100								
2300								XXXXX
17 0100								
2300								XXXXX
18 0100								
2300								XXXXX
19 0100								
2300								XXXXX
20 0100								

Comments: _____

ATTACHMENT 1

RCS LEAK RATE DATA SHEET

DAY 16 THROUGH 20 - MISCELLANEOUS LEAK RATE DATA

MONTH: _____ YEAR: _____

DAY/ TIME	RCDT LKG	SIT LKG	VLV LKG	QT LKG	RWT LKG	S/G LKG	CHG PP LKG	NET LKG	PERF INIT	VERF INIT
16 0100										
17 0100										
18 0100										
19 0100										
20 0100										

SRO Review: 16: _____ COMMENTS: _____
17: _____
18: _____ _____
19: _____
20: _____ _____

RWT M/U
DAY/AMT: ___/_____ _____
___/_____
___/_____ _____
___/_____
___/_____ _____

ATTACHMENT 1

RCS LEAK RATE DATA SHEET

DAY 21 THROUGH 25 - GROSS LEAK RATE DATA

MONTH: _____ YEAR: _____

INST No.	XAT 011	2-FQI 210X	2-FQI 210Y	2-FQI 2540	L226	XAP 001	XVL 001	
DAY/ TIME	Tavg	MU INT READING	BA INT READING	DIVERT INT	VCT LVL	PZR PRESS	PZR LVL	GROSS LKG
2300								XXXXX
21 0100								
2300								XXXXX
22 0100								
2300								XXXXX
23 0100								
2300								XXXXX
24 0100								
2300								XXXXX
25 0100								

Comments: _____

ATTACHMENT 1

RCS LEAK RATE DATA SHEET

DAY 21 THROUGH 25 - MISCELLANEOUS LEAK RATE DATA

MONTH: _____ YEAR: _____

DAY/ TIME	RCDT LKG	SIT LKG	VLV LKG	QT LKG	RWT LKG	S/G LKG	CHG PP LKG	NET LKG	PERF INIT	VERF INIT
21 0100										
22 0100										
23 0100										
24 0100										
25 0100										

SRO Review: 21: _____ COMMENTS: _____
22: _____
23: _____ _____
24: _____
25: _____ _____

RWT M/U
DAY/AMT: ___/_____ _____
___/_____
___/_____ _____
___/_____
___/_____ _____

ATTACHMENT 1

RCS LEAK RATE DATA SHEET

DAY 26 THROUGH 30 - GROSS LEAK RATE DATA

MONTH: _____ YEAR: _____								
INST No.	XAT 011	2-FQI 210X	2-FQI 210Y	2-FQI 2540	L226	XAP 001	XVL 001	
DAY/ TIME	Tavg	MU INT READING	BA INT READING	DIVERT INT	VCT LVL	PZR PRESS	PZR LVL	GROSS LKG
2300								XXXXX
26 0100								
2300								XXXXX
27 0100								
2300								XXXXX
28 0100								
2300								XXXXX
29 0100								
2300								XXXXX
30 0100								

Comments: _____

ATTACHMENT 1

RCS LEAK RATE DATA SHEET

DAY 26 THROUGH 30 - MISCELLANEOUS LEAK RATE DATA

MONTH: _____ YEAR: _____

DAY/ TIME	RCDT LKG	SIT LKG	VLV LKG	QT LKG	RWT LKG	S/G LKG	CHG PP LKG	NET LKG	PERF INIT	VERF INIT
26 0100										
27 0100										
28 0100										
29 0100										
30 0100										

SRO Review: 26: _____ COMMENTS: _____
27: _____
28: _____ _____
29: _____
30: _____ _____

RWT M/U
DAY/AMT: ___/_____ _____
___/_____
___/_____ _____
___/_____
___/_____ _____

ATTACHMENT 1

RCS LEAK RATE DATA SHEET

DAY 31 - GROSS LEAK RATE DATA

MONTH: _____ YEAR: _____								
INST No.	XAT 011	2-FQI 210X	2-FQI 210Y	2-FQI 2540	L226	XAP 001	XVL 001	
DAY/ TIME	Tavg	MU INT READING	BA INT READING	DIVERT INT	VCT LVL	PZR PRESS	PZR LVL	GROSS LKG
2300								XXXXX
31 0100								

Comments: _____

ATTACHMENT 1

RCS LEAK RATE DATA SHEET

DAY 31 - MISCELLANEOUS LEAK RATE DATA

MONTH: _____ YEAR: _____

DAY/ TIME	RCDT LKG	SIT LKG	VLV LKG	QT LKG	RWT LKG	S/G LKG	CHG PP LKG	NET LKG	PERF INIT	VERF INIT
31 0100										

SRO Review: 31: _____ COMMENTS: _____

_____

RWT M/U
DAY/AMT: ___/_____ _____

ATTACHMENT 2

RCS LEAK RATE DATA SHEET: SUPPLEMENTAL

GROSS LEAK RATE DATA

MONTH: _____ YEAR: _____								
INST No.	XAT 011	2-FQI 210X	2-FQI 210Y	2-FQI 2540	L226	XAP 001	XVL 001	
DAY/ TIME	Tavg	MU INT READING	BA INT READING	DIVERT INT	VCT LVL	PZR PRESS	PZR LVL	GROSS LKG
____								XXXXX
____								XXXXX
____								XXXXX
____								XXXXX

Comments: _____

ATTACHMENT 2

RCS LEAK RATE DATA SHEET: SUPPLEMENTAL

MISCELLANEOUS LEAK RATE DATA

MONTH: _____ YEAR: _____

DAY/ TIME	RCDT LKG	SIT LKG	VLV LKG	QT LKG	RWT LKG	S/G LKG	CHG PP LKG	NET LKG	PERF INIT	VERF INIT

SRO Review: _____ _____
_____ _____
_____ _____
_____ _____

RWT M/U
DAY/AMT: ___/_____ ___/_____
___/_____ ___/_____
___/_____ ___/_____
___/_____ ___/_____

COMMENTS: _____
_____
_____
_____
_____

ATTACHMENT 3

RCS LEAK RATE CALCULATION WORKSHEET

INITIALS

A. PROCEDURE

1. This attachment is to be used in conjunction with the procedure when an RCS Manual Leak Rate Calculation is required to document the actual performance of the test.

2. Any additional calculations required shall be performed on facsimiles of this attachment and attached to the procedure for review and documentation **PER** Section 9.0.

3. RCS leak rate manual calculation(s) **NOT** required to be performed by the body of this procedure shall be marked N/A in the initials block(s).

4. **RECORD** the following parameters:

   a. Date: _____

   b. Time: _____

   c. PZR Pressure: _____ PSIA

   d. T_{AVG} : _____ °F _____

ATTACHMENT 3

RCS LEAK RATE CALCULATION WORKSHEET

INITIALS

B. GROSS RCS LEAKAGE

1. MANUAL CALCULATION (6.2)

$$\text{GROSS RCS LEAKAGE } (FT^3) = 155.1\left[\frac{(V_1 - V_\emptyset)}{V_1\ V_\emptyset}\right] + \left[\frac{(MU - DIV)}{7.48\emptyset5}\right] - \left[2.493(LP_1 - LP_\emptyset)\right] - \left[3.61(LV_1 - LV_\emptyset)\right]$$

$$\underline{\qquad\qquad}\ (FT^3) = 155.1\left[\frac{(___ - ___)}{(___\ X\ ___)}\right] + \left[\frac{(___ - ___)}{7.48\emptyset5}\right] - \left[2.493\ (___ - ___)\right] - \left[3.61\ (___ - ___)\right]$$

ATTACHMENT 3

RCS LEAK RATE CALCULATION WORKSHEET

INITIALS

Where:

V_0 = RCS specific volume at Initial T_{AVG} from TABLE 1.

V_1 = RCS specific volume at Final T_{AVG} from TABLE 1.

M/U = Makeup, in gallons. (RCS M/U plus BA M/U)

DIV = Letdown diverted, in gallons; including RWT M/U.

LP_0 = Initial pressurizer level, in inches.

LP_1 = Final pressurizer level, in inches.

LV_0 = Initial VCT level, in inches.

LV_1 = Final VCT level, in inches.

ATTACHMENT 3

RCS LEAK RATE CALCULATION WORKSHEET

INITIALS

2. ALTERNATE MANUAL CALCULATION (6.3.A)
(No Shutdown Cooling)

$$\text{GROSS RCS LEAKAGE } (FT^3) = 155.1\left[\frac{(V_1 - V_0)}{V_1\ V_0}\right] + \left[\frac{(MU - DIV)}{7.4805}\right] - \left[3.61(LV_1 - LV_0)\right] - 0.0673\left[\frac{LP_1}{VP_1} - \frac{LP_0}{VP_0}\right]$$

$$\frac{____}{(FT^3)} = 155.1\left[\frac{(___ - ___)}{(___ \times ___)}\right] + \left[\frac{(___ - ___)}{7.4805}\right] - \left[3.61\ (___ - ___)\right] - 0.0673\left[___ - ___\right]$$

ATTACHMENT 3

RCS LEAK RATE CALCULATION WORKSHEET

INITIALS

Where:

V_0 = RCS specific volume at Initial pressure and temperature from ASME Steam Tables.

V_1 = RCS specific volume at Final pressure and temperature from ASME Steam Tables.

M/U = Makeup, in gallons. (RCS M/U plus BA M/U)

DIV = Letdown diverted, in gallons; including RWT M/U.

LP_0 = Initial pressurizer level, in inches.

LP_1 = Final pressurizer level, in inches.

VP_0 = PZR specific volume of water at Initial pressure from ASME Steam Tables.

VP_1 = PZR specific volume of water at Final pressure from ASME Steam Tables.

LV_0 = Initial VCT level, in inches.

LV_1 = Final VCT level, in inches.

ATTACHMENT 3

RCS LEAK RATE CALCULATION WORKSHEET

INITIALS

3. ALTERNATE MANUAL CALCULATION (6.3.B)
(Shutdown Cooling with 1 HX)

$$\text{GROSS RCS LEAKAGE } (FT^3) = 169.3\left[\frac{(V_1 - V_0)}{V_1\ V_0}\right] + \left[\frac{(MU - DIV)}{7.4805}\right] - \left[3.61(LV_1 - LV_0)\right] - 0.0673\left[\frac{LP_1}{VP_1} - \frac{LP_0}{VP_0}\right]$$

$$\frac{____}{(FT^3)} = 169.3\left[\frac{(___ - ___)}{(___ \times ___)}\right] + \left[\frac{(___ - ___)}{7.4805}\right] - \left[3.61\ (___ - ___)\right] - 0.0673\left[___ - ___\right]$$

ATTACHMENT 3

RCS LEAK RATE CALCULATION WORKSHEET

INITIALS

Where:

V_0 = RCS specific volume at Initial pressure and temperature from ASME Steam Tables.

V_1 = RCS specific volume at Final pressure and temperature from ASME Steam Tables.

M/U = Makeup, in gallons. (RCS M/U plus BA M/U)

DIV = Letdown diverted, in gallons; including RWT M/U.

LP_0 = Initial pressurizer level, in inches.

LP_1 = Final pressurizer level, in inches.

VP_0 = PZR specific volume of water at Initial pressure from ASME Steam Tables.

VP_1 = PZR specific volume of water at Final pressure from ASME Steam Tables.

LV_0 = Initial VCT level, in inches.

LV_1 = Final VCT level, in inches.

ATTACHMENT 3

RCS LEAK RATE CALCULATION WORKSHEET

INITIALS

4. ALTERNATE MANUAL CALCULATION (6.3.C)
(Shutdown Cooling with 2 HXs)

$$\text{GROSS RCS LEAKAGE } (FT^3) = 179.8\left[\frac{(V_1 - V_\emptyset)}{V_1\ V_\emptyset}\right] + \left[\frac{(MU - DIV)}{7.48\emptyset5}\right] - \left[3.61(LV_1 - LV_\emptyset)\right] - \emptyset.\emptyset673\left[\frac{LP_1}{VP_1} - \frac{LP_\emptyset}{VP_\emptyset}\right]$$

$$\frac{\quad}{(FT^3)} = 179.8\left[\frac{(__ - __)}{(__ \times __)}\right] + \left[\frac{(__ - __)}{7.48\emptyset5}\right] - \left[3.61\ (__ - __)\right] - \emptyset.\emptyset673\left[__ - __\right]$$

ATTACHMENT 3

RCS LEAK RATE CALCULATION WORKSHEET

INITIALS

Where:

V_0 = RCS specific volume at Initial pressure and temperature from ASME Steam Tables.

V_1 = RCS specific volume at Final pressure and temperature from ASME Steam Tables.

M/U = Makeup, in gallons. (RCS M/U plus BA M/U)

DIV = Letdown diverted, in gallons; including RWT M/U.

LP_0 = Initial pressurizer level, in inches.

LP_1 = Final pressurizer level, in inches.

VP_0 = PZR specific volume of water at Initial pressure from ASME Steam Tables.

VP_1 = PZR specific volume of water at Final pressure from ASME Steam Tables.

LV_0 = Initial VCT level, in inches.

LV_1 = Final VCT level, in inches.

ATTACHMENT 3

RCS LEAK RATE CALCULATION WORKSHEET

INITIALS

5. **CONVERT** the Gross RCS Leakage to GPM by the following equations: (N/A equation not used)

   a. For time intervals of twenty four (24) hours use:

   _____ FT^3 x (5.195×10^{-3}) = _____ GPM _____

   b. For time intervals other than twenty four (24) hours use:

   $$\frac{_____\ FT^3}{_____\ Hrs.\ time} \times (0.1247) = _____\ GPM$$ _____

6. **RECORD** in GROSS LKG column on ATTACHMENT 1 or ATTACHMENT 2. _____

ATTACHMENT 4 **Page 1 of 3**

RCDT, SIT, VLV, QT, RWT, CHG PP AND S/G CALCULATION WORKSHEET

INITIALS

A. PROCEDURE

Date: _____ Time: _____

1. This attachment to be used in conjunction with the procedure when RCDT, SIT, VLV, QT, RWT(if the Unit is on Shutdown Cooling) and CHG PP leakage calculations are required to document actual performance of the test.

2. Any additional calculations required shall be performed on facsimiles of this attachment and attached to the procedure for review and documentation **PER** Section 9.0.

3. Calculation(s) **NOT** required to be performed by this procedure shall be marked N/A in the initials block(s).

B. RCDT LKG (6.4)

1. RCDT Initial LVL: _____ in; Time: _____
   Final LVL: _____ in; Time: _____

2. RCDT VOL (GAL): _____ - _____ = _____ GAL
   (Final) (Initial) (Total)

3. RCDT LKG: _____ ÷ _____ = _____ GPM
   (Total) (Time-min) (RCDT LKG) _____

C. SIT LKG (6.5)

1. SIT Start Time _____; SIT Stop Time _____

   $$\text{SIT LKG} = \frac{\text{(TOTAL SIT LVL DECREASE) x 40 GAL/IN}}{\text{TIME (min)}}$$

2. SIT LKG =(____) x 40 GAL/IN= _____ GPM
   _____ (min) (SIT LKG) _____

D. RCS VLV LKG (6.0.H)

1. _____ - _____ = _____ GPM
   (RCDT LKG) (SIT LKG) (VLV LKG)
   (SECT B) (SECT C) _____

E. NET LKG (6.0.I)

1. _____ - _____ = _____ GPM
   (GROSS LKG) (VLV LKG) (NET LKG)
   (ATT 1 OR 2) (SECT D) _____

ATTACHMENT 4

RCDT, SIT, VLV, QT, RWT, CHG PP AND S/G CALCULATION WORKSHEET

INITIALS

F. QT LKG (6.6)

1. QT Initial LVL: _____ in; Time: _____
   PRESS: _____

   Final LVL: _____ in; Time: _____

2. QT VOL (GAL): _____ - _____ = _____ GAL
   (Final) (Initial) (Total)

3. QT LKG: _____ ÷ _____ = _____ GPM
   (Total) (Time-min) (QT LKG) _____

G. NET LKG (6.0.K)

1. _____ - _____ - _____ = _____ GPM
   (GROSS LKG) (VLV LKG) (QT LKG) (NET LKG)
   (ATT 1 OR 2) (SECT D) (SECT F) _____

H. RWT LKG (6.7)(if the Unit is on Shutdown Cooling)

1. RWT Initial LVL: _____ in; Time: _____

   Final LVL: _____ in; Time: _____

2. RWT LVL INCREASE: _____ - _____ = _____ in
   (Final) (Initial) (Total)

3. RWT LKG = (TOTAL RWT LVL INCREASE) x 842 GAL/in / TIME (min)

   RWT LKG = (____) x 842 GAL/in / _____ (min) = _____ GPM (RWT LKG) _____

I. NET LKG (6.0.M)(if the Unit is on Shutdown Cooling)

1. _____ - _____ - _____ - _____ = _____ GPM
   (GROSS LKG) (VLV LKG) (QT LKG) (RWT LKG) (NET LKG)
   (ATT 1 OR 2) (SECT D) (SECT F) (SECT H) _____

J. S/G LKG (6.0.O)

1. NET LKG _____ GPM: From Section G **OR** if the Unit is on Shutdown Cooling Section I.

2. S/G LKG - _____ GPM: From procedure Step 6.0.N.

3. _____ - _____ = _____ GPM
   (J.1) (J.2) (NET LKG) _____

ATTACHMENT 4 **Page 3 of 3**

RCDT, SIT, VLV, QT, RWT, CHG PP AND S/G CALCULATION WORKSHEET

INITIALS

K. CHG PP LKG (6.0.P)

1. NET LKG _____ GPM: From Section J.

2. CHG PP LKG - _____ GPM: From procedure Step 6.0.P

3. _____ - _____ = _____ GPM _____
(K.1) (K.2) (*NET LKG)

* Record in NET LKG column ATT 1 **OR** 2; IF > 1.0, **NOTIFY** CRS and **IMPLEMENT** AOP-2A. _____

L. REACTOR COOLANT SYSTEM LEAKRATE TRENDING (6.0.R)

NOTE
N/A values **NOT** used.

1. **SUBTRACT** ALL used values from the GROSS LKG value. _____

_____ - _____ - _____ - _____ - _____ - _____
(GROSS LKG) (VLV LKG) (QT LKG) (RWT LKG) (S/G LKG) (CHG PP LKG)
(ATT 1 OR 2) (SECT D) (SECT F) (SECT H) (SECT J) (SECT K)

= _____ GPM
(NET LKG)

M. CALCULATION VERIFICATION

1. Checked by: _____/ _____
Date

CALVERT CLIFFS NUCLEAR POWER PLANT
SURVEILLANCE TEST PROCEDURE
UNIT ONE

STP O-55A-1

CONTAINMENT CLOSURE VERIFICATION

REVISION 36

SAFETY RELATED

CONTINUOUS USE

Approval Authority: E.D. Dean III 2/9/2007
Signature/Date

Effective Date: 2/19/2007

SURVEILLANCE TEST PROCEDURES ADDITIONAL COVER SHEET INFORMATION

A. **Test Performance**

Permission to perform test: _____ / _____
Shift Manager Date

B. **Test completion, results review and approval** (Circle appropriate answer)

Accept. Criteria in spec?	YES NO N/A	Adjustments made?	YES NO N/A
As found results in spec?	YES NO N/A	CR submitted?	YES NO N/A
As left results in spec?	YES NO N/A	Malfunctions indicated?	YES NO N/A

REMARKS: _____

Test completed by: _____ / _____
Date

Analysis of results: _____

Shift Manager review: _____ / _____
Date

Analysis/Comments: _____

Functional Surveillance
Test Coordinator: _____ Date: _____

EQSE (if required): _____ Date: _____

* PORC Meeting No.: _____ Date: _____

* Plant General Manager: _____ Date: _____

* Required only if completed test on SR and designated NSR structures, systems and components (per Q List) identified a malfunction or were out of specification.

Attach a separate sheet, if necessary, to document additional comments.

TABLE OF CONTENTS

TITLE	PAGE
1.0 PURPOSE	5
2.0 APPLICABILITY/SCOPE	5
3.0 REFERENCES AND DEFINITIONS	9
4.0 PREREQUISITES	10
5.0 PRECAUTIONS	11
6.0 PERFORMANCE	12
6.1 MECHANICAL PENETRATION CHECKS	12
6.2 ELECTRICAL PENETRATION CANISTER CHECKS	126
6.3 11 STEAM GENERATOR CHECKS	129
6.4 12 STEAM GENERATOR CHECKS	129
6.5 ACCEPTANCE CRITERIA	130
7.0 POST PERFORMANCE ACTIVITIES	134
8.0 BASES	134
9.0 RECORDS	134
ATTACHMENT 1 11 STEAM GENERATOR OPEN TO CONTAINMENT ATMOSPHERE	135
ATTACHMENT 2 12 STEAM GENERATOR OPEN TO CONTAINMENT ATMOSPHERE	141
ATTACHMENT 3 11 STEAM GENERATOR CLOSED TO CONTAINMENT ATMOSPHERE	147
ATTACHMENT 4 12 STEAM GENERATOR CLOSED TO CONTAINMENT ATMOSPHERE	156
ATTACHMENT 5 VALVES REQUIRING SCAFFOLDING/LADDER	165
ATTACHMENT 6 MSIV DIAGRAM	167

LIST OF EFFECTIVE PAGES

PAGE NUMBERS	REVISION
1-167	36

PROCEDURE ALTERATIONS

PAGES	REVISION/CHANGE
121	03606

1.0 PURPOSE

A. The primary purpose of this test is to be used for aligning or verification of Containment Closure in Modes 5 **OR** 6, as applicable, per Technical Specifications Surveillance Requirements, by ensuring that each penetration providing direct access from the containment atmosphere to the outside atmosphere is closed **OR** controlled.

B. This test may also be used for the alignment and verification of the status of Containment Closure, **not** applicable to Technical Specifications Surveillance Requirements.

2.0 APPLICABILITY/SCOPE

A. Performance of this STP fulfills the Surveillance Requirements of the following Technical Specifications:

- TS 3.9.3, for Containment Penetrations during movement of irradiated fuel assemblies within containment.

OR

- TS 3.9.4 or 3.9.5, for no SDC loop OPERABLE **OR** in operation.

B. This test checks the position of valves and components for Containment penetrations and is written assuming that each penetration is intact with the respective containment isolation valves operable and manual valves installed. Containment closure for individual penetrations may be also be established by tagout **PER** NO-1-112, Temporary Alteration **PER** MD-1-100, **OR** Containment Closure NO-1-114 controls, and be evaluated separately by the CRS.. **[B0334]**

C. Performance of this test is the same for the requirements of non-T.S., verification of Containment Closure for Reduced Inventory **AND** Shutdown Safety, but is strictly controlled **PER** NO-1-114.

2.0 APPLICABILITY/SCOPE (Continued)

D. Test Performance Requirements:

1. **IF** a penetration is controlled by a tagout **PER** NO-1-112 **OR** Temporary Alteration(TA) **PER** MD-1-100, **AND** is aligned differently than shown here, **THEN**:

   - **REVIEW** the tagout/TA to be sure it meets Closure requirements, including valves within the boundary
   - **PLACE** a circled comment number in the initials column of the alignment
   - **LIST** the comment number and specific tagout number in the Supplemental Cover Sheet remarks section

2. **IF** this test is performed for Reduced Inventory operations **OR** Safe Shutdown requirements of NO-1-114,
   THEN DOCUMENT all deviations as follows:

   - **REVIEW** the deviation, ensuring that it is being tracked in the Containment Closure Deviation Log with a restoration plan in place **PER** NO-1-114
   - **PLACE** a circled comment number in the initials column of the alignment
   - **LIST** in the Supplemental Cover Sheet remarks section, the comment number and indicate that a deviation exists and is being tracked in the Containment Closure Deviation Log

3. **IF** this test is performed for Restricted Containment Closure, **THEN ENSURE** Containment Closure Alignment tags are hung **PER** NO-1-112.

4. The initial alignment of power operated valves should be coordinated with the performance of any associated STP, such as STP 0-66D-1 for CC CNTMT Isolations, to prevent pre-conditioning the valves.

5. Verification of valve position using remote indication is acceptable provided the position indicator is operable. Local observation of valve position should be used in those cases where remote position indication is suspect.

6. For those penetrations where both inside and outside Containment alignments are provided **AND** unless stated otherwise, either alignment may be performed and the choice is left to the discretion of the CRS.

7. Steps in this test may be performed in any order.

8. Pipe caps and flanges are to be visually checked for leakage or coverage with boric acid. Write a Condition Report and take appropriate actions as necessary.

2.0.D APPLICABILITY/SCOPE (Continued)

9. This test shall be performed by individuals qualified on the watch stations for the affected equipment.

10. The Shift Manager shall determine if a pre-test briefing is required and direct the SRO accordingly.

11. All valves that are positioned off-normal to establish Containment Closure will be controlled **PER** NO-1-112, Safety Tagging **OR** logged in the Locked Valve Deviation Log, to ensure that they will be aligned PRIOR to Mode change.

2.0 APPLICABILITY/SCOPE (Continued)

E. Indicate the reason for performing this STP:

☐ Alignment or verification of Containment Closure **PER** TS 3.9.3, for Containment Penetrations during movement of irradiated fuel assemblies within containment.

☐ Alignment or verification of Containment Closure, **PER** TS 3.9.4 or 3.9.5, for no SDC loop OPERABLE **OR** in operation.

☐ Alignment or verification of Containment Closure for Safe Shutdown or Reduced Inventory requirements of NO-1-114.

☐ Post Maintenance or Operability Verification. Enter penetrations and/or attachments to be performed in Pre-surveillance Remarks.
- Individual penetrations and/or attachments may be considered independent and may be omitted in their entirety for equipment not verified.

MO/CR numbers: _____

Pre-surveillance remarks: _____

_____

_____

_____

_____

_____

_____

_____

_____

_____

Determination made by: _____
(SRO)

3.0 REFERENCES AND DEFINITIONS

3.1 REFERENCES

A. **P&IDs**

1. OM SERIES

B. **Procedures**

1. EN-4-104, Surveillance Testing
2. NO-1-114, Containment Closure
3. NO-1-112, Safety Tagging

3.2 DEFINITIONS

A. **DEVIATION:** means Containment Closure Deviation **PER** NO-1-114.

4.0 PREREQUISITES

INITIALS

A. **IF** Containment Closure is being verified **PER** T.S.s,
THEN NOTIFY Outage Management and Safety Tagging that all Maintenance activities in progress or being planned to be performed, which could cause a breach of closure, shall have tagout boundaries established to prevent loss of closure.

OR

IF Containment Closure is being verified for operations covered by NO-1-114,
THEN ENSURE Outage Management and Safety Tagging are notified that all Maintenance activities in progress or being planned to be performed, which may cause a deviation to Closure as allowed by NO-1-114, must have restoration plans in place.

_____
Name of Outage Management Rep. notified

_____
Name of Safety Tagging Rep. notified

Notified by:

_____/_____/_____
Shift Manager Date Time

B. A pre-test briefing has been held.
(Mark N/A if Shift Manager has determined that a pre-test briefing not required) _____ SRO

C. **PERFORM** a page check of this procedure. _____

5.0 PRECAUTIONS

A. **STOP** the test, **STABILIZE** the plant and **NOTIFY** the Shift Manager for any of the following:

- Equipment malfunctions
- Out of tolerance items
- Conditions outside those allowed by Technical Specifications
- Unexpected plant responses

B. DO **NOT** reposition any valve in this test without CRS approval.

C. Manual valve position verification shall be performed by moving the valve in the shut direction **ONLY**.

D. Unless specifically directed by this procedure, DO **NOT** use the local handwheel to verify position of MOVs. Doing so renders the MOV inoperable.

E. Valve positions shown in the flow diagrams DO **NOT** necessarily represent required valve positions. Required valve positions are delineated in the valve alignment.

F. **NO DEVIATIONS** are acceptable when aligning Containment Closure **PER** TS ACTIONS 3.9.4.A **OR** 3.9.5.B, for no SDC Loop operable **OR** in operation.

G. **WHEN** aligning or verifying Containment Closure for Reduced Inventory, **THEN ONLY** those deviations which have been approved by the GS-NPO and have Contingency plans in place for timely restoration, are allowed. (Reference NO-1-114)

H. **WHEN** aligning or verifying Containment Closure for Refueling, **THEN ONLY** the deviations for the Containment Personnel Airlock, Containment Emergency Airlock Temporary Door, and the Containment Outage Door are allowed, **PER** TS 3.9.3.

I. The Containment Outage Door (COD) SHALL **NOT** be used for ANY Closure requirements during Severe Weather conditions.

6.0 PERFORMANCE

6.1 MECHANICAL PENETRATION CHECKS

27' WEST PENETRATION ROOM
(VIEW FROM OUTSIDE CONTAINMENT)

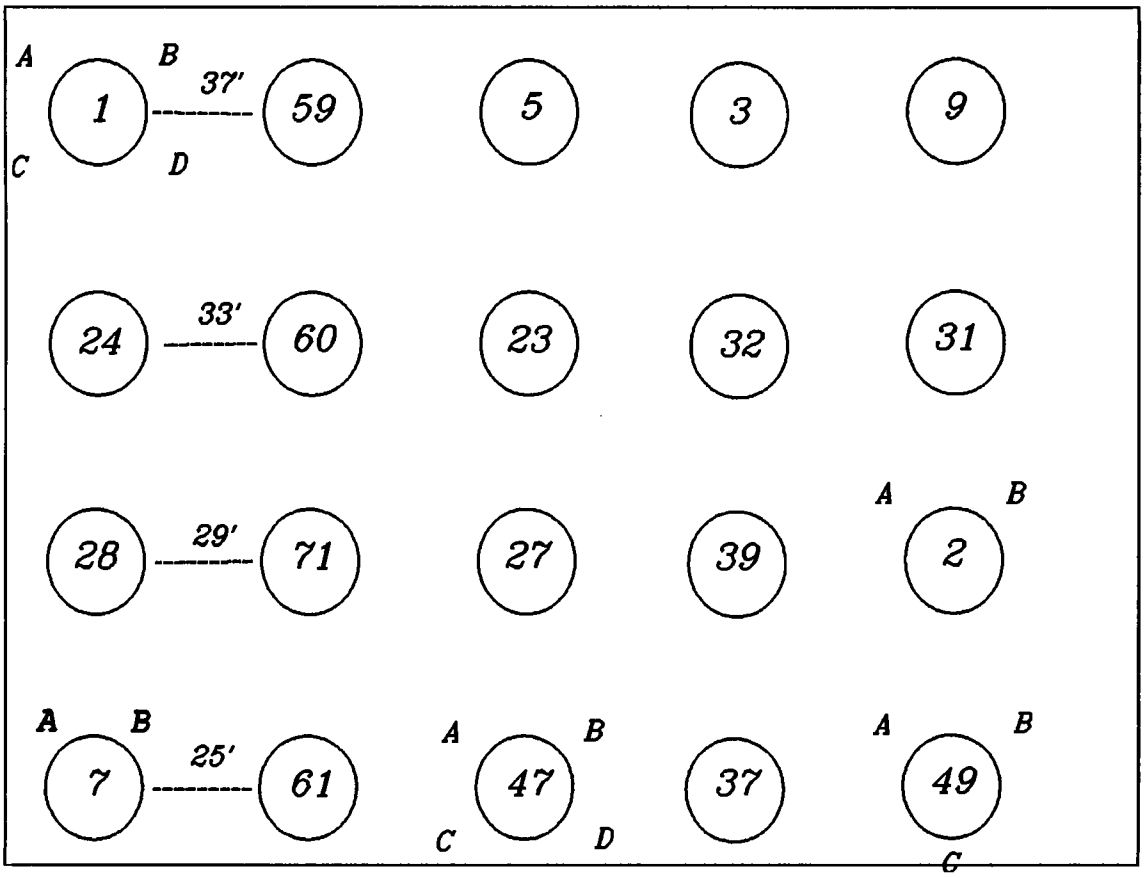

6.1 MECHANICAL PENETRATION CHECKS (Continued)

(continued)

1 RCS SAMPLE, VENT,CBO,PASS	59-SFP COOLING	5 SAFETY INJ	3 SAFETY-INJ	9 CNTMT SPRAY
24-QT O_2 SMPL	60-AUX STM	23-RCDT	32-SRW FROM CNTMT CLR	31-SRW FROM CNTMT CLR
28-SRW TO CNTMT CLR	71-GROUND	27-SRW TO CNTMT CLR	39-SIT LEAK	2-CVCS
7-ILRT	61-SFP CLG	47-H_2 SAMPLE	37 PLANT SERVICE WATER	49-H_2 SAMPLE

6.1 MECHANICAL PENETRATION CHECKS (Continued)

PENETRATION 1A RCS SAMPLES

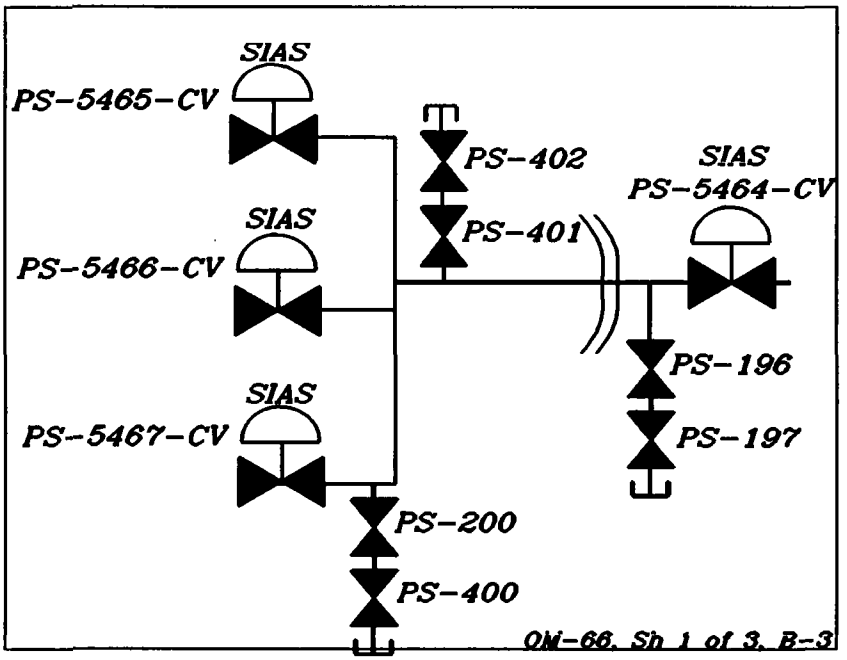

OUTSIDE CONTAINMENT ALIGNMENT

VALVE	POSITION	LOCATION	INITIALS
1-PS-197	LOCKED SHUT	27' WEST PENET ROOM, 7' OVERHEAD	
1-PS-196	LOCKED SHUT	27' WEST PENET ROOM, 7' OVERHEAD	
1-PS-5464-CV	SHUT	1C10	

6.1 MECHANICAL PENETRATION CHECKS (Continued)

PENETRATION 1A RCS SAMPLES (continued)

INSIDE CONTAINMENT ALIGNMENT

VALVE	POSITION	LOCATION	INITIALS
1-PS-402	LOCKED SHUT	WEST STAIRWELL FIRST LEVEL DOWN FROM 45'	
1-PS-401	LOCKED SHUT	WEST STAIRWELL FIRST LEVEL DOWN FROM 45'	
1-PS-400	LOCKED SHUT	BASEMENT, NORTH WALL OF 11 S/G SUPPORT STANCHION	
1-PS-200	LOCKED SHUT	BASEMENT, NORTH WALL OF 11 S/G SUPPORT STANCHION	
1-PS-5465-CV	SHUT	1C90	
1-PS-5466-CV	SHUT	1C90	
1-PS-5467-CV	SHUT	1C90	

6.1 MECHANICAL PENETRATION CHECKS (Continued)

PENETRATION 1B CONTAINMENT VENT HEADER

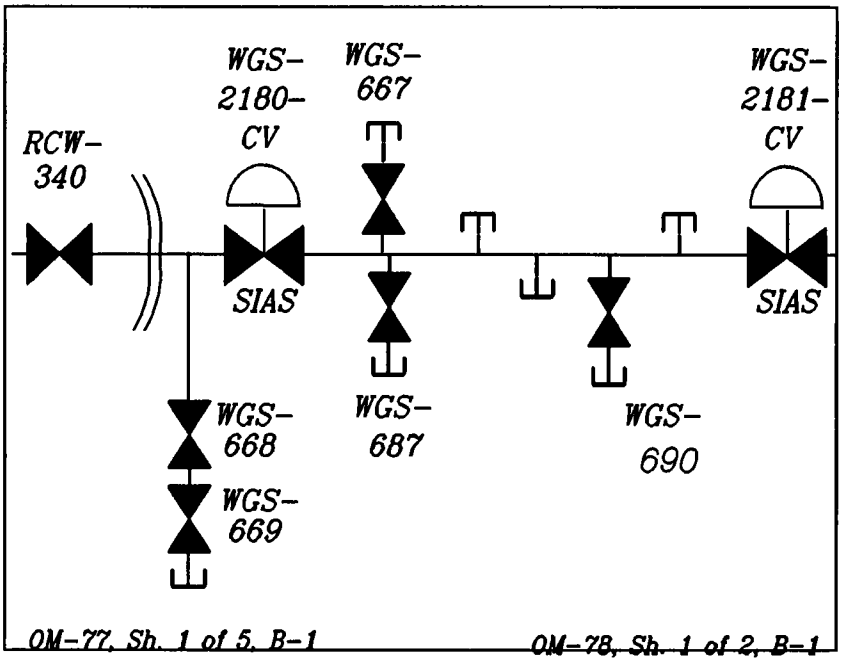

OUTSIDE CONTAINMENT ALIGNMENT

VALVE	POSITION	LOCATION	INITIALS
1-WGS-2180-CV	SHUT	1C10	
0-WGS-669	LOCKED SHUT	27' WEST PENET ROOM NE CORNER, N OF STANCHION	
0-WGS-668	LOCKED SHUT	27' WEST PENET ROOM NE CORNER, N OF STANCHION	

OR

VALVE	POSITION	LOCATION	INITIALS
1-WGS-2181-CV	SHUT	1C10	
0-WGS-669	LOCKED SHUT	27' WEST PENET ROOM NE CORNER, N OF STANCHION	
0-WGS-668	LOCKED SHUT	27' WEST PENET ROOM NE CORNER, N OF STANCHION	

6.1 MECHANICAL PENETRATION CHECKS (Continued)

PENETRATION 1B CONTAINMENT VENT HEADER (continued)

OUTSIDE CONTAINMENT ALIGNMENT
(continued)

VALVE	POSITION	LOCATION	INITIALS
O-WGS-667	LOCKED SHUT	27' WEST PENET ROOM NE CORNER, 10' OVERHEAD	
O-WGS-687	LOCKED SHUT	27' LETDOWN Hx ROOM NW CORNER, 8' OVERHEAD	

O-WGS-690**	LOCKED SHUT	5' HALLWAY OUTSIDE U-2 VALVE ALLEY, IN OVERHEAD BETWEEN I BEAMS	N/A

** O-WGS-690 Retired in place by MCR 92-069-01-1 due to inaccessibility; Verification NOT required; NOT to be operated. Integrity will be established via LLRT of Penetration 1B, U-1 CNTMT. **[B0331]**

INSIDE CONTAINMENT ALIGNMENT

1-RCW-340	SHUT (1)	27'W. STAIRWAY LANDING	

(1) **IF NOT** controlled by NO-1-112,
THEN LOG in the Locked Valve Deviation Log

6.1 MECHANICAL PENETRATION CHECKS (Continued)

PENETRATION 1C RCP BLEEDOFF

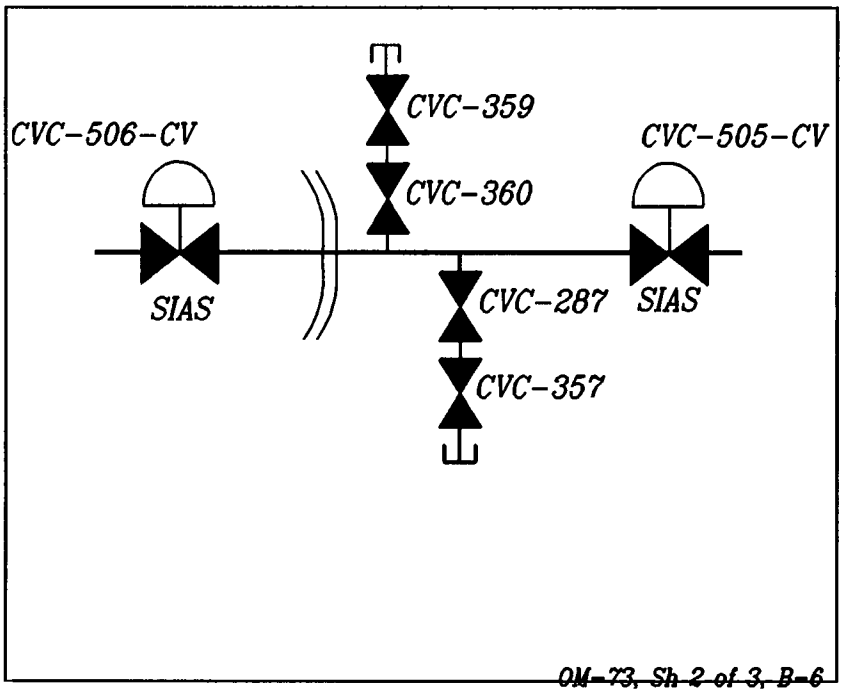

OUTSIDE CONTAINMENT ALIGNMENT

VALVE	POSITION	LOCATION	INITIALS
1-CVC-505-CV	SHUT (1)	1C07	
1-CVC-357	LOCKED SHUT	27' WEST PENET ROOM, S WALL 2', ABOVE DECKING	
1-CVC-287	LOCKED SHUT	27' WEST PENET ROOM, S WALL 2', ABOVE DECKING	
1-CVC-359	LOCKED SHUT	27' WEST PENET ROOM, NE CORNER, 12' OVERHEAD 6" FROM FIRE MAIN	
1-CVC-360	LOCKED SHUT	27' WEST PENET ROOM, NE CORNER, 12' OVERHEAD	

(1) **IF NOT** controlled by NO-1-112,
THEN LOG in the Locked Valve Deviation Log

6.1 MECHANICAL PENETRATION CHECKS (Continued)

PENETRATION 1C RCP BLEEDOFF (continued)

INSIDE CONTAINMENT ALIGNMENT

1-CVC-506-CV	SHUT (1)	1C07	

(1) IF NOT controlled by NO-1-112,
THEN LOG in the Locked Valve Deviation Log

6.1 MECHANICAL PENETRATION CHECKS (Continued)

PENETRATION 1D PASS SAMPLE RETURN

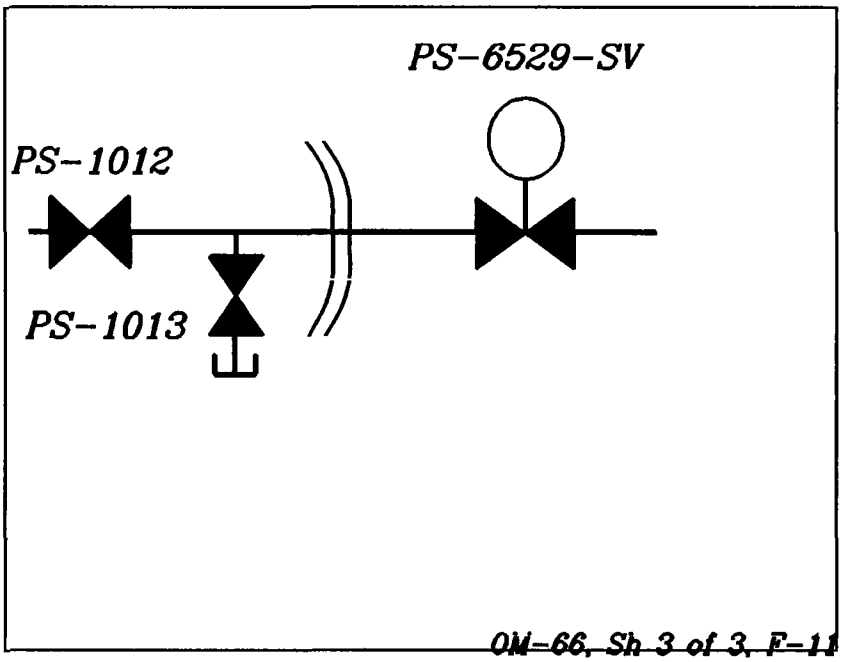

OUTSIDE CONTAINMENT ALIGNMENT

VALVE	POSITION	LOCATION	INITIALS
1-PS-6529-SV	LOCKED SHUT KEY REMOVED	1C101	

INSIDE CONTAINMENT ALIGNMENT

1-PS-1013	LOCKED SHUT	W STAIRWELL, FIRST PLATFORM UP FROM BASEMENT, E SIDE	
1-PS-1012	SHUT (1)	W STAIRWELL, FIRST PLATFORM UP FROM BASEMENT, E SIDE	

(1) IF NOT controlled by NO-1-112,
THEN LOG in the Locked Valve Deviation Log

6.1 MECHANICAL PENETRATION CHECKS (Continued)

PENETRATION 24 QUENCH TANK O_2 SAMPLE

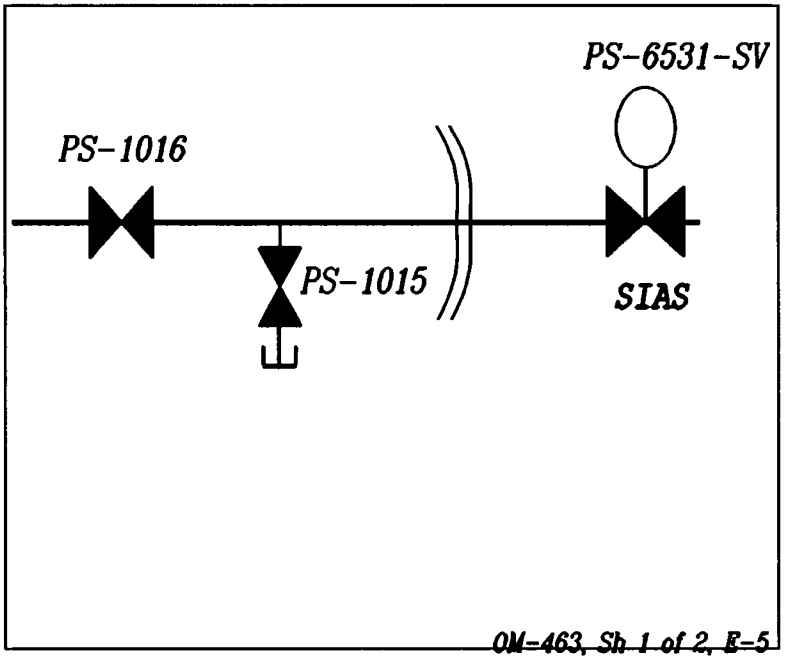

OUTSIDE CONTAINMENT ALIGNMENT

VALVE	POSITION	LOCATION	INITIALS
1-PS-6531-SV	LOCKED SHUT KEY REMOVED	1C101	

INSIDE CONTAINMENT ALIGNMENT

1-PS-1015	LOCKED SHUT	W STAIRWELL, FIRST PLATFORM UP FROM BASEMENT, E SIDE	
1-PS-1016	SHUT (1)	W STAIRWELL, FIRST PLATFORM UP FROM BASEMENT, E SIDE	

(1) **IF NOT** controlled by NO-1-112,
THEN LOG in the Locked Valve Deviation Log

6.1 MECHANICAL PENETRATION CHECKS (Continued)

PENETRATION 7A ILRT TEST

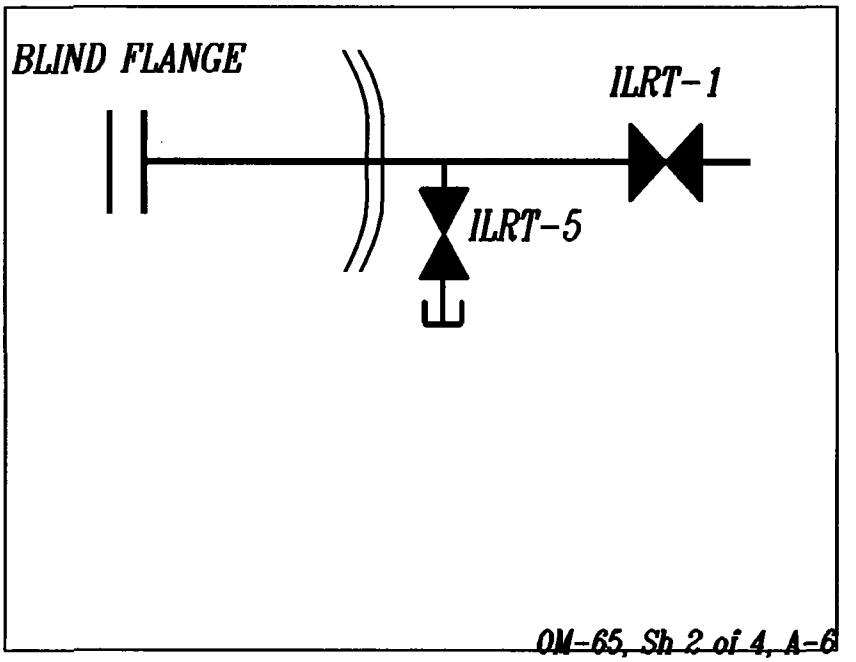

OUTSIDE CONTAINMENT ALIGNMENT

VALVE	POSITION	LOCATION	INITIALS
1-ILRT-5	LOCKED SHUT	5' WEST PENET ROOM, 2' BELOW 27' DECKING	
1-ILRT-1	LOCKED SHUT	5' WEST PENET ROOM, 2' BELOW 27' DECKING	

INSIDE CONTAINMENT ALIGNMENT

BLIND FLANGE	INSTALLED	BASEMENT, BEHIND WEST STAIRWELL, 20' OVERHEAD	

6.1 MECHANICAL PENETRATION CHECKS (Continued)

PENETRATION 7B ILRT TEST

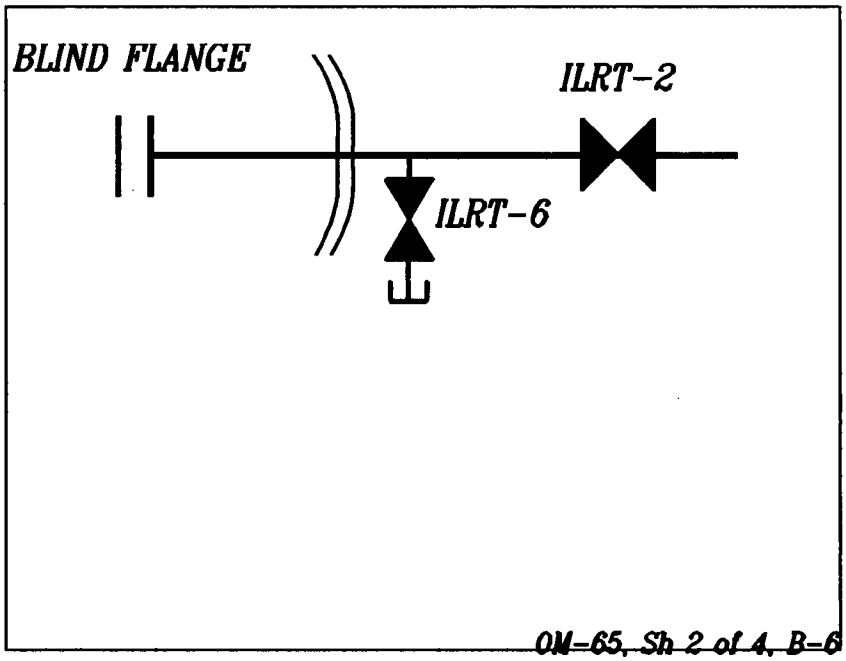

OUTSIDE CONTAINMENT ALIGNMENT

VALVE	POSITION	LOCATION	INITIALS
1-ILRT-6	LOCKED SHUT	5' WEST PENET ROOM, 2' BELOW 27' DECKING	
1-ILRT-2	LOCKED SHUT	5' WEST PENET ROOM, 2' BELOW 27' DECKING	

INSIDE CONTAINMENT ALIGNMENT

BLIND FLANGE	INSTALLED	BASEMENT, BEHIND WEST STAIRWELL, 20' OVERHEAD	

6.1 MECHANICAL PENETRATION CHECKS (Continued)

PENETRATION 59 SFP COOLING TO REFUELING POOL

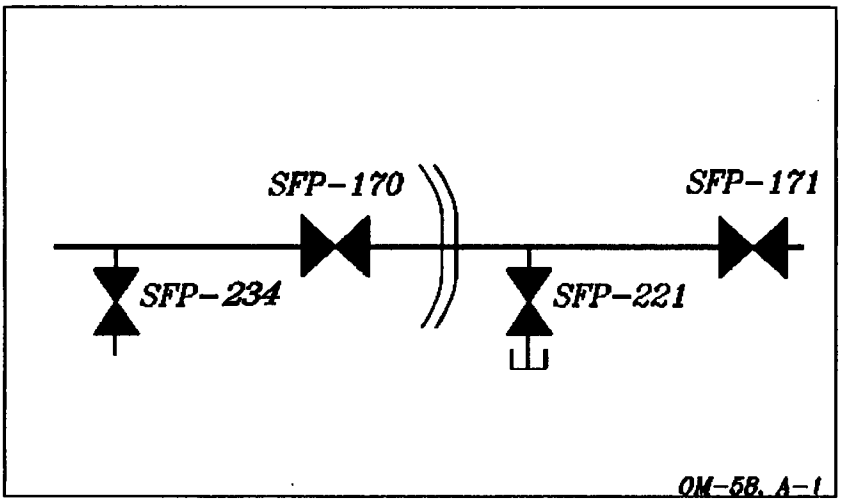

OUTSIDE CONTAINMENT ALIGNMENT

VALVE	POSITION	LOCATION	INITIALS
O-SFP-221	LOCKED SHUT	27' WEST PENET ROOM, NE CORNER, 1' FROM DECKING	
O-SFP-171	LOCKED SHUT	27' WEST PENET ROOM, E OF 12 CAC SRW CVs	

OR

SFP Cooling is in service with flow through this penetration.	

6.1 MECHANICAL PENETRATION CHECKS (Continued)

PENETRATION 59 SFP COOLING TO REFUELING POOL (continued)

INSIDE CONTAINMENT ALIGNMENT

O-SFP-170	LOCKED SHUT	WEST STAIRWELL, FIRST PLATFORM DOWN FROM 45', BEHIND CS CVs	

OR

VALVE	POSITION	LOCATION	INITIALS
O-SFP-234	SHUT	NEAR O-SFP-170	
Refueling pool water level is greater than or equal to 23 ft above the top of irradiated fuel assemblies seated in the reactor vessel.			

6.1 MECHANICAL PENETRATION CHECKS (Continued)

PENETRATION 60 AUXILIARY STEAM

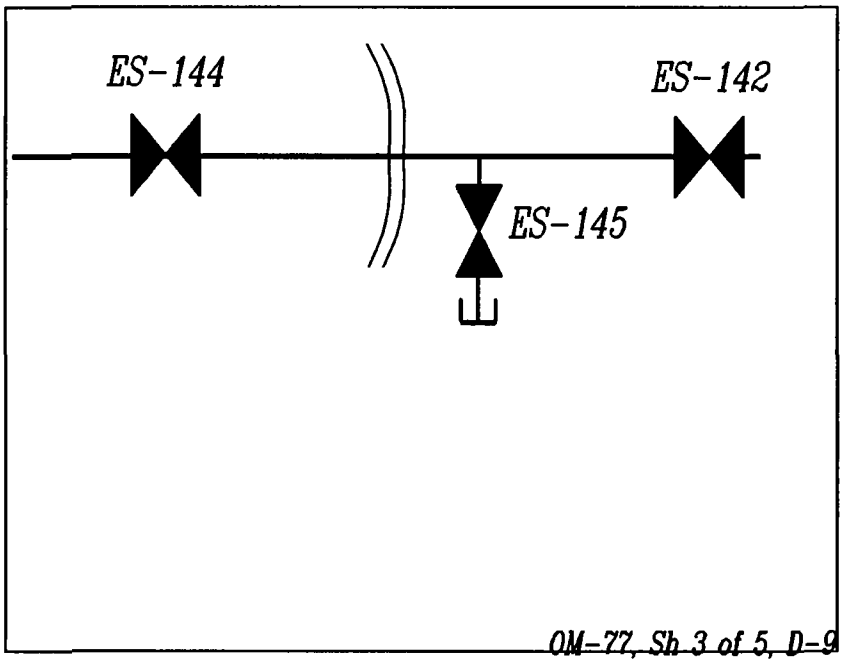

OUTSIDE CONTAINMENT ALIGNMENT

VALVE	POSITION	LOCATION	INITIALS
1-ES-145	LOCKED SHUT	27' WEST PENET ROOM, NE CORNER, NE OF STANCHION	
1-ES-142	LOCKED SHUT	27' WEST PENET ROOM, NE CORNER, E OF STANCHION	

INSIDE CONTAINMENT ALIGNMENT

1-ES-144	LOCKED SHUT	33' ELEVATION, WEST SIDE	

6.1 MECHANICAL PENETRATION CHECKS (Continued)

PENETRATION 61 SFP COOLING FROM REFUELING POOL

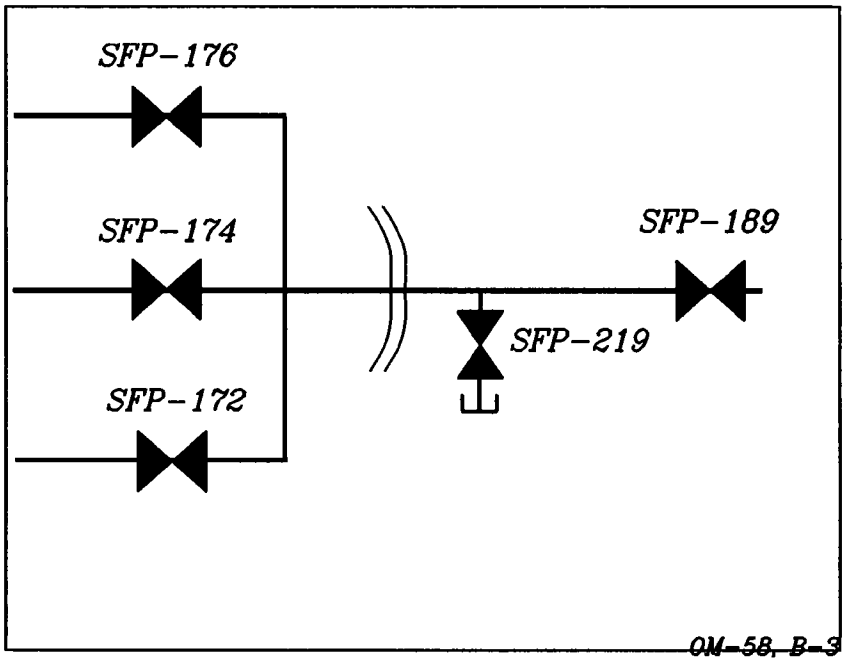

OUTSIDE CONTAINMENT ALIGNMENT

VALVE	POSITION	LOCATION	INITIALS
0-SFP-219	LOCKED SHUT	5' WEST PENET ROOM, NE CORNER, 4' BELOW 27' DECKING	
0-SFP-189	LOCKED SHUT	27' WEST PENET ROOM, NE CORNER	

OR

SFP Cooling is in service with flow through this penetration.	

6.1 MECHANICAL PENETRATION CHECKS (Continued)

PENETRATION 61 SFP COOLING FROM REFUELING POOL (continued)

INSIDE CONTAINMENT ALIGNMENT

VALVE	POSITION	LOCATION	INITIALS
0-SFP-172	LOCKED SHUT	BASEMENT, W OF RCDT, CHAIN OPERATOR	
0-SFP-174	LOCKED SHUT	BASEMENT, SW, CHAIN OPERATOR	
0-SFP-176	LOCKED SHUT	BASEMENT, SW, CHAIN OPERATOR	

OR

VALVE	POSITION	LOCATION	INITIALS
0-SFP-176	LOCKED SHUT	BASEMENT, SW, CHAIN OPERATOR	
Refueling pool water level is greater than or equal to 23 ft above the top of irradiated fuel assemblies seated in the reactor vessel.			

6.1 MECHANICAL PENETRATION CHECKS (Continued)

PENETRATION 23 RCDT DISCHARGE

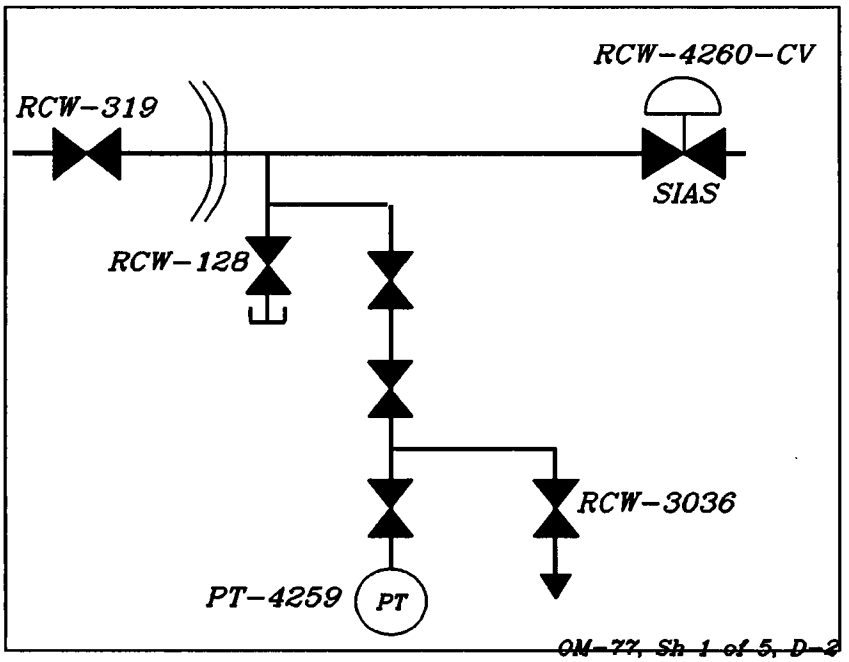

OUTSIDE CONTAINMENT ALIGNMENT

VALVE	POSITION	LOCATION	INITIALS
1-RCW-128	LOCKED SHUT	27' WEST PENET ROOM, 30' INSIDE DOOR, 7' OVERHEAD	
1-RCW-3036	LOCKED SHUT	27' HALLWAY, N OF DOOR TO 27' PENET ROOM NEAR FLOOR	
1-PT-4259	TEST CAP INSTALLED	27' PENET ROOM	
1-RCW-4260-CV	SHUT	1C10	

INSIDE CONTAINMENT ALIGNMENT

1-RCW-319	SHUT (1)	10' BELOW RCDT	

(1) IF NOT controlled by NO-1-112,
THEN LOG in the Locked Valve Deviation Log

6.1 MECHANICAL PENETRATION CHECKS (Continued)

PENETRATION 3 SAFETY INJECTION

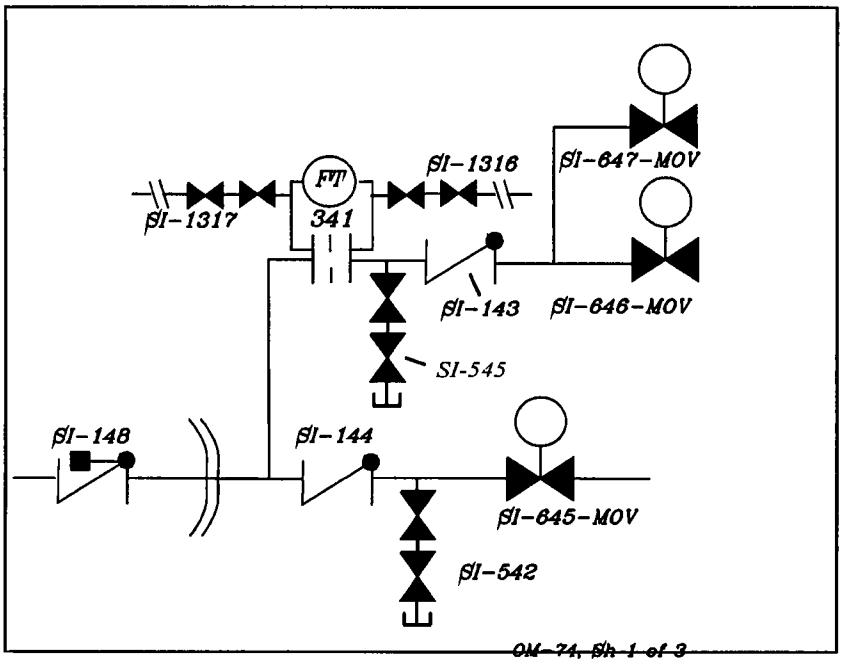

NOTE
Inside Containment Alignment is preferred to provide operational flexibility.

OUTSIDE CONTAINMENT ALIGNMENT

VALVE	POSITION	LOCATION	INITIALS
1-SI-545	LOCKED SHUT	27' WEST PENET ROOM, NEAR CNTMT WALL	
1-SI-1317	LOCKED SHUT	5' WEST PENET ROOM, ON CNTMT WALL	
1-SI-1316	LOCKED SHUT	5' WEST PENET ROOM, ON CNTMT WALL	
1-FT-341	FT **AND** TEST CONN CAPS INSTALLED	5' WEST PENET ROOM, ON CNTMT WALL	

6.1 MECHANICAL PENETRATION CHECKS (Continued)

PENETRATION 3 SAFETY INJECTION (continued)

OUTSIDE CONTAINMENT ALIGNMENT
(continued)

VALVE	POSITION	LOCATION	INITIALS
1-SI-143	INSTALLED	27' WEST PENET ROOM, NEXT TO 1-SI-646-MOV	
1-SI-144	INSTALLED	27' WEST PENET ROOM, NEXT TO 1-SI-646-MOV	

OR

SDC Cooling is in service with flow through this penetration.	

INSIDE CONTAINMENT ALIGNMENT

VALVE	POSITION	LOCATION	INITIALS
1-SI-148	INSTALLED	45' CNTMT, BELOW SIT	

6.1 MECHANICAL PENETRATION CHECKS (Continued)

PENETRATION 5 SAFETY INJECTION

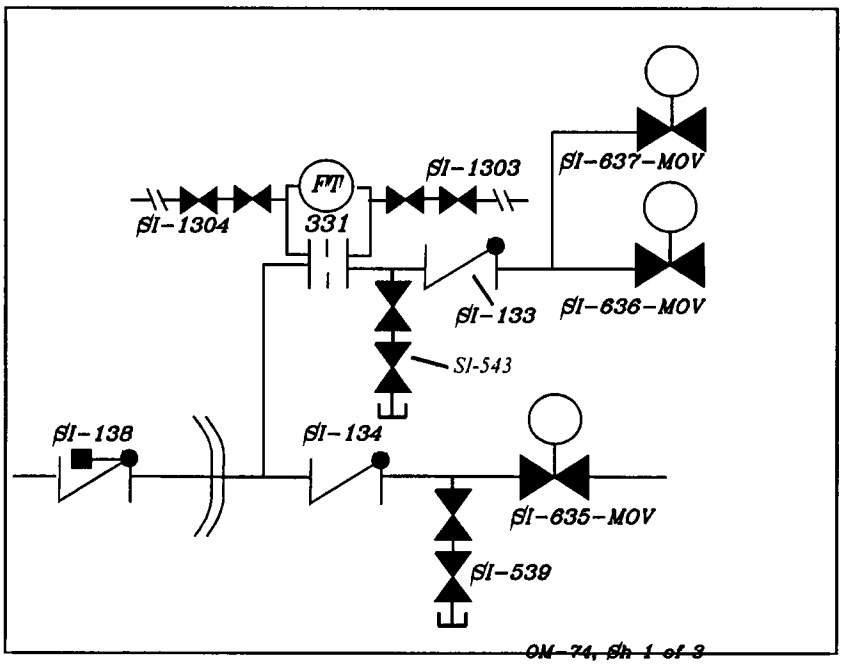

NOTE
Inside Containment Alignment is preferred to provide operational flexibility.

OUTSIDE CONTAINMENT ALIGNMENT

VALVE	POSITION	LOCATION	INITIALS
1-SI-543	LOCKED SHUT	27' WEST PENET ROOM, NEAR CNTMT WALL	
1-SI-1303	LOCKED SHUT	5' WEST PENET ROOM, ON CNTMT WALL	
1-SI-1304	LOCKED SHUT	5' WEST PENET ROOM, ON CNTMT WALL	
1-FT-331	FT **AND** TEST CONN CAPS INSTALLED	5' WEST PENET ROOM, ON CNTMT WALL	

6.1 MECHANICAL PENETRATION CHECKS (Continued)

PENETRATION 5 SAFETY INJECTION (continued)

OUTSIDE CONTAINMENT ALIGNMENT
(continued)

VALVE	POSITION	LOCATION	INITIALS
1-SI-133	INSTALLED	27' WEST PENET ROOM, NEXT TO 1-SI-636-MOV	
1-SI-134	INSTALLED	27' WEST PENET ROOM, NEXT TO 1-SI-635-MOV	

OR

SDC is in service with flow through this penetration	

INSIDE CONTAINMENT ALIGNMENT

VALVE	POSITION	LOCATION	INITIALS
1-SI-138	INSTALLED	45' CNTMT, BELOW SIT	

6.1 MECHANICAL PENETRATION CHECKS (Continued)

PENETRATION 47A HYDROGEN SAMPLE

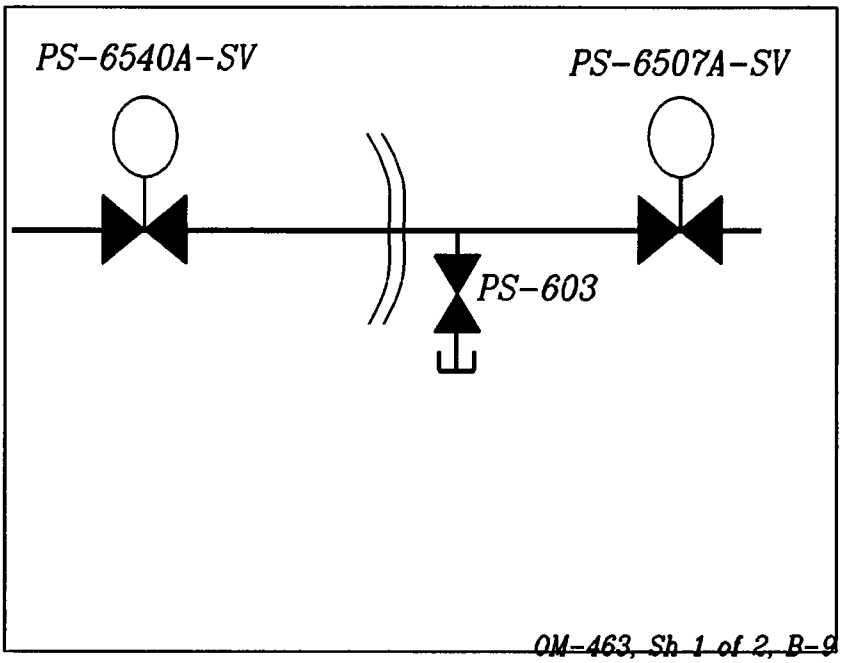

OUTSIDE CONTAINMENT ALIGNMENT

VALVE	POSITION	LOCATION	INITIALS
1-PS-603	LOCKED SHUT	5' WEST PENET ROOM, N END ON CNTMT WALL	
1-PS-6507A-SV	LOCKED SHUT KEY REMOVED	1C102	

INSIDE CONTAINMENT ALIGNMENT

1-PS-6540A-SV	LOCKED SHUT KEY REMOVED	1C102	

6.1 MECHANICAL PENETRATION CHECKS (Continued)

PENETRATION 47B HYDROGEN SAMPLE

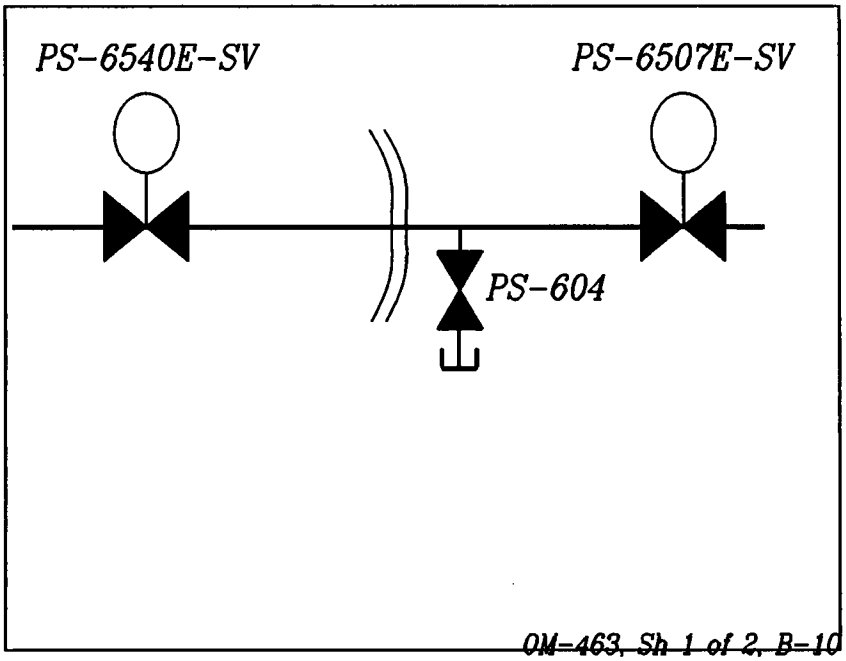

OUTSIDE CONTAINMENT ALIGNMENT

VALVE	POSITION	LOCATION	INITIALS
1-PS-604	LOCKED SHUT	5' WEST PENET ROOM, N END ON CNTMT WALL	
1-PS-6507E-SV	LOCKED SHUT KEY REMOVED	1C102	

INSIDE CONTAINMENT ALIGNMENT

1-PS-6540E-SV	LOCKED SHUT KEY REMOVED	1C102	

6.1 MECHANICAL PENETRATION CHECKS (Continued)

PENETRATION 47C HYDROGEN SAMPLE

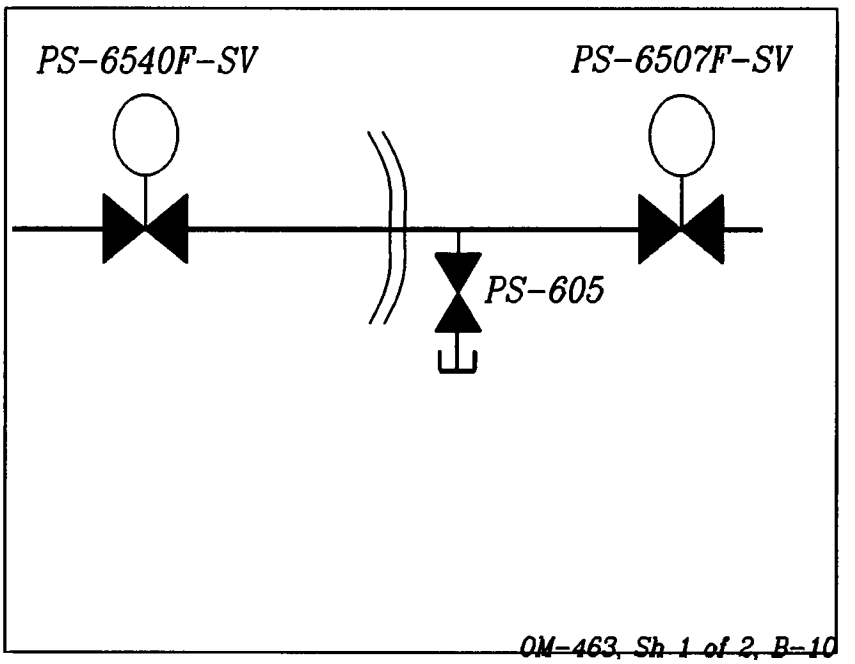

OUTSIDE CONTAINMENT ALIGNMENT

VALVE	POSITION	LOCATION	INITIALS
1-PS-605	LOCKED SHUT	5' WEST PENET ROOM, N END ON CNTMT WALL	
1-PS-6507F-SV	LOCKED SHUT KEY REMOVED	1C102	

INSIDE CONTAINMENT ALIGNMENT

1-PS-6540F-SV	LOCKED SHUT KEY REMOVED	1C102	

6.1 MECHANICAL PENETRATION CHECKS (Continued)

PENETRATION 47D HYDROGEN SAMPLE

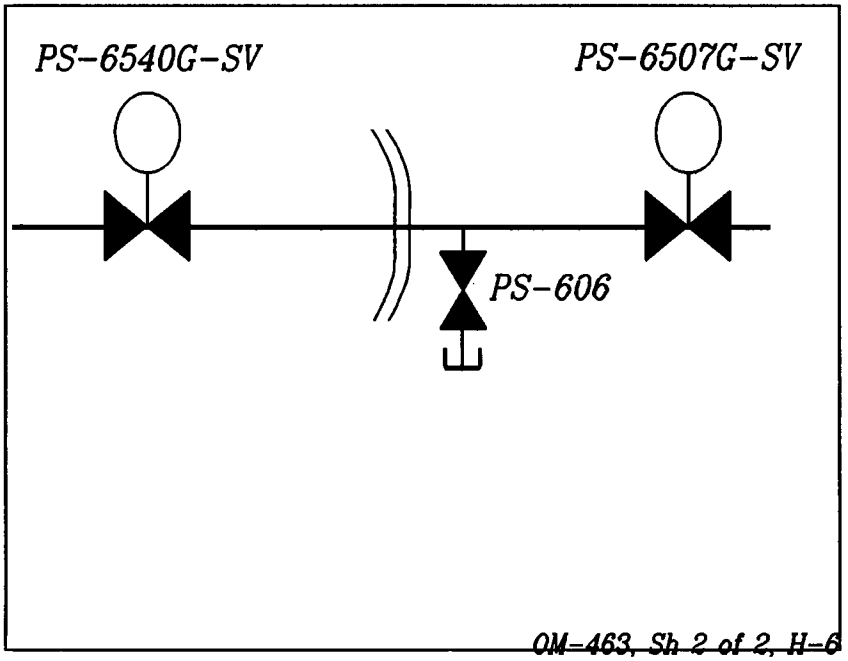

OUTSIDE CONTAINMENT ALIGNMENT

VALVE	POSITION	LOCATION	INITIALS
1-PS-606	LOCKED SHUT	5' WEST PENET ROOM, N END ON CNTMT WALL	
1-PS-6507G-SV	LOCKED SHUT KEY REMOVED	1C101	

INSIDE CONTAINMENT ALIGNMENT

1-PS-6540G-SV	LOCKED SHUT KEY REMOVED	1C101	

6.1 MECHANICAL PENETRATION CHECKS (Continued)

PENETRATION 39 SIT LEAKAGE TEST

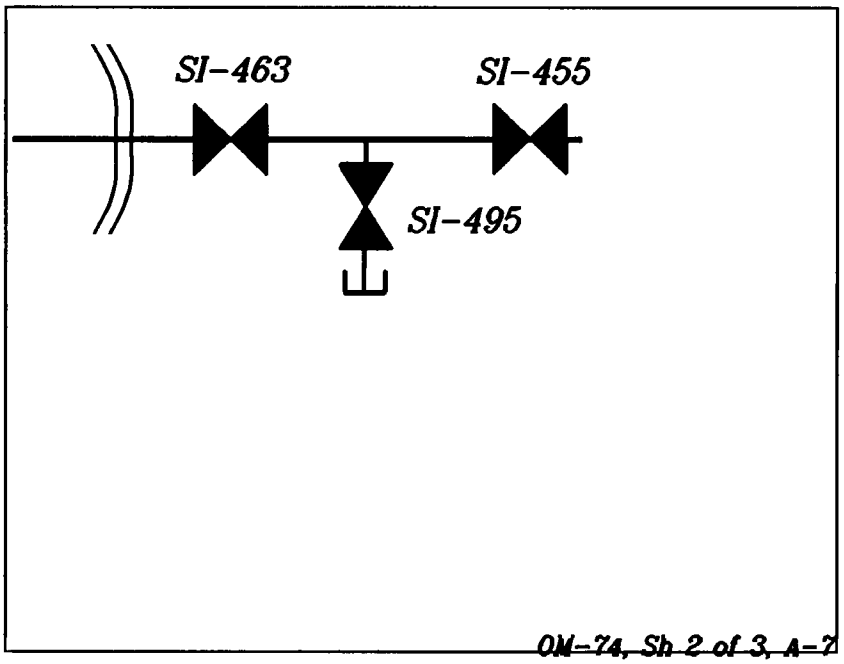

OUTSIDE CONTAINMENT ALIGNMENT

VALVE	POSITION	LOCATION	INITIALS
1-SI-463	LOCKED SHUT	27' WEST PENET ROOM, E OF 12 CAC SRW CVs	

OR

System is in service with flow through this penetration	

INSIDE CONTAINMENT ALIGNMENT

- - - - - - -	- - - - - - - - -	NONE - - - - - - - - - - - - -	- - - - -

6.1 MECHANICAL PENETRATION CHECKS (Continued)

PENETRATION 37 PLANT SERVICE WATER

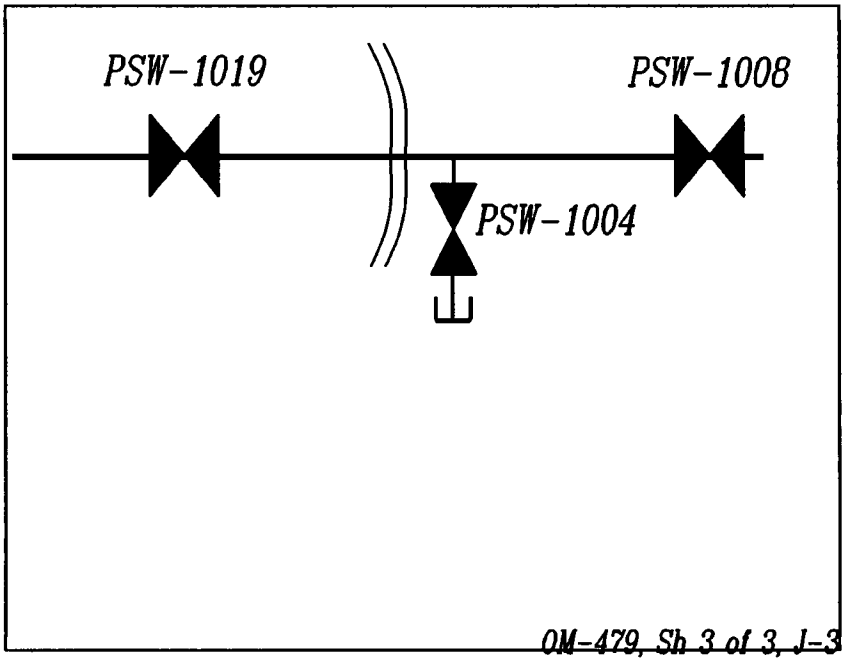

OUTSIDE CONTAINMENT ALIGNMENT

VALVE	POSITION	LOCATION	INITIALS
0-PSW-1004	LOCKED SHUT	5' WEST PENET ROOM, 4' UNDER 27' DECKING	
0-PSW-1008	LOCKED SHUT	5' WEST PENET ROOM, CHAIN OPERATOR	

INSIDE CONTAINMENT ALIGNMENT

0-PSW-1019	LOCKED SHUT	BASEMENT, W WALL, 20' OVERHEAD	

6.1 MECHANICAL PENETRATION CHECKS (Continued)

PENETRATION 9 CONTAINMENT SPRAY

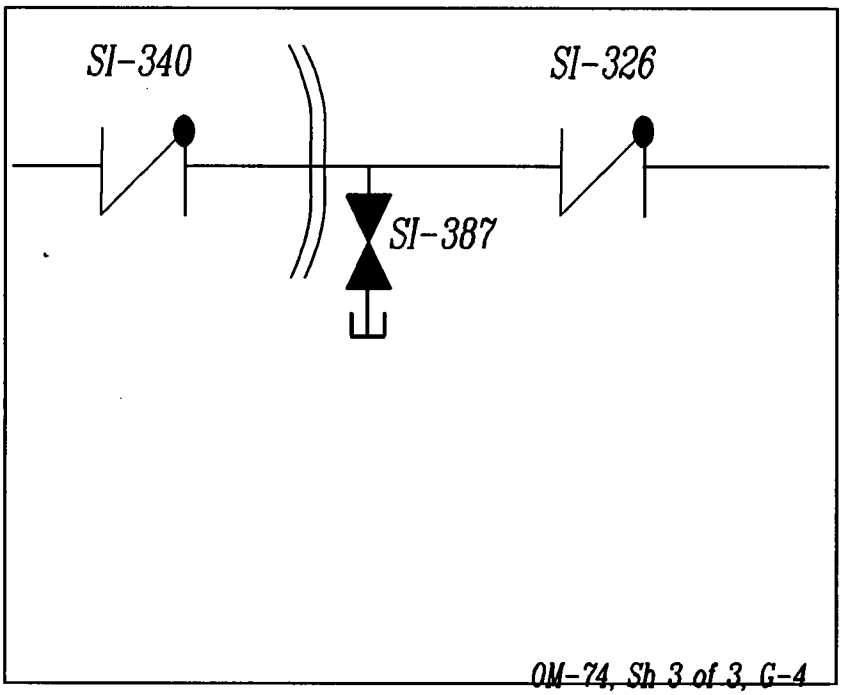

OUTSIDE CONTAINMENT ALIGNMENT

VALVE	POSITION	LOCATION	INITIALS
1-SI-387	LOCKED SHUT	27' WEST PENET ROOM, 10' OVERHEAD, ABOVE CVCS PIPING	
1-SI-326	INSTALLED	27' WEST PENET ROOM	

INSIDE CONTAINMENT ALIGNMENT

1-SI-340	INSTALLED	27' CNTMT, WEST	

6.1 MECHANICAL PENETRATION CHECKS (Continued)

PENETRATION 2A CVCS LETDOWN

OUTSIDE CONTAINMENT

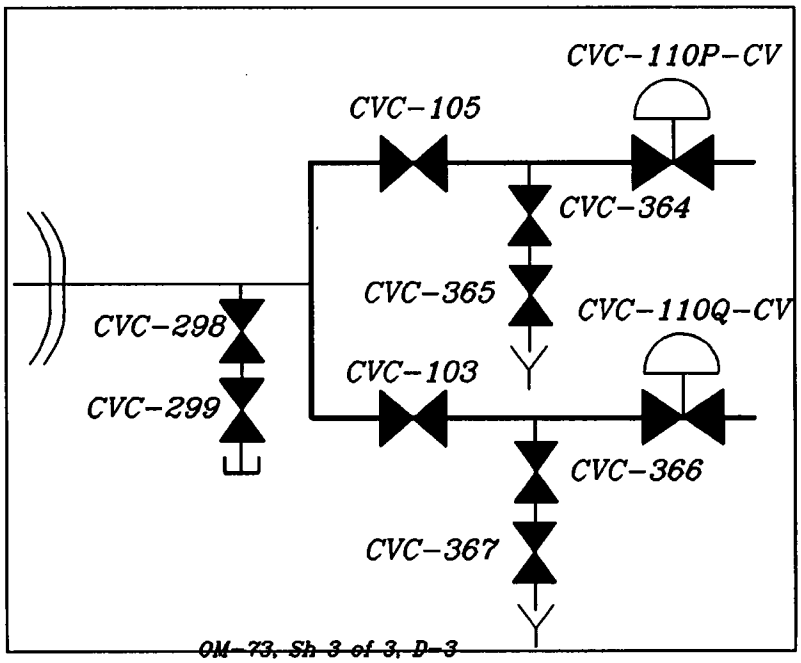

OUTSIDE CONTAINMENT ALIGNMENT

VALVE	POSITION	LOCATION	INITIALS
1-CVC-299	LOCKED SHUT	27' WEST PENET ROOM, S OF STANCHION IN CENTER OF ROOM	
1-CVC-298	LOCKED SHUT	27' WEST PENET ROOM, S OF STANCHION IN CENTER OF ROOM	
1-CVC-105	SHUT (1)	LETDOWN HX ROOM (CHAIN OPER. OUTSIDE ROOM)	
1-CVC-103	SHUT (1)	LETDOWN HX ROOM (CHAIN OPER. OUTSIDE ROOM)	

(1) **IF NOT** controlled by NO-1-112,
THEN LOG in the Locked Valve Deviation Log

6.1 MECHANICAL PENETRATION CHECKS (Continued)

PENETRATION 2A CVCS LETDOWN (continued)

INSIDE CONTAINMENT

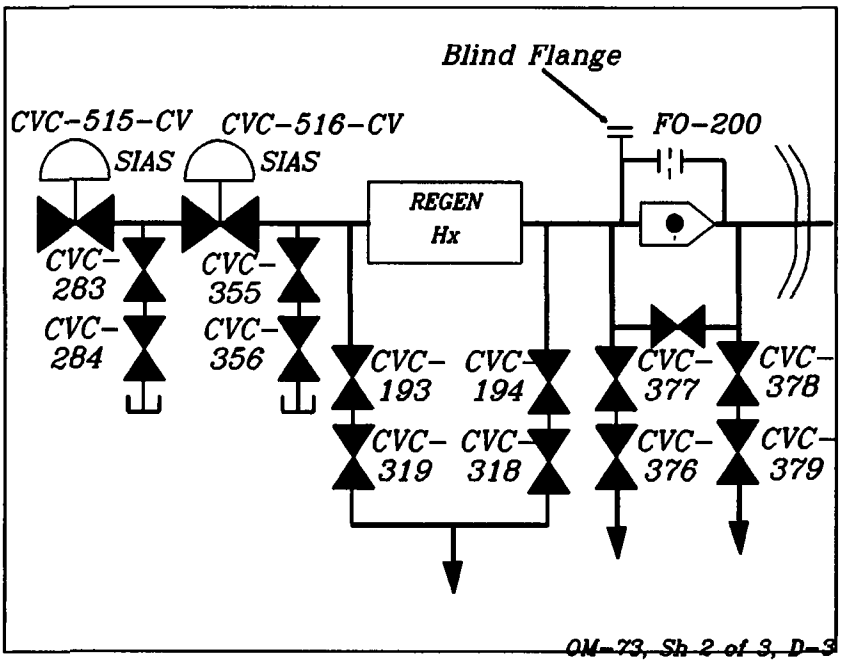

INSIDE CONTAINMENT ALIGNMENT

VALVE	POSITION	LOCATION	INITIALS
1-CVC-379	LOCKED SHUT	SW, 15' IN OVERHEAD	
1-CVC-378	LOCKED SHUT	SW, 15' IN OVERHEAD	
1-CVC-376	LOCKED SHUT	SW, 9' IN OVERHEAD	
1-CVC-377	LOCKED SHUT	SW, 9' IN OVERHEAD	
1-CVC-318	LOCKED SHUT	12 PUMP BAY, UNDER REGEN HX	
1-CVC-194	LOCKED SHUT	12 PUMP BAY, UNDER REGEN HX	
1-CVC-319	LOCKED SHUT	12 PUMP BAY, UNDER REGEN HX	
1-CVC-193	LOCKED SHUT	12 PUMP BAY, UNDER REGEN HX	

6.1 MECHANICAL PENETRATION CHECKS (Continued)

PENETRATION 2A CVCS LETDOWN (continued)

INSIDE CONTAINMENT ALIGNMENT
(continued)

VALVE	POSITION	LOCATION	INITIALS
1-CVC-356	LOCKED SHUT	25' ABOVE 12 RCP OIL DRAIN TANK	
1-CVC-355	LOCKED SHUT	25' ABOVE 12 RCP OIL DRAIN TANK	
1-FO-200 BLIND FLANGE	INSTALLED	10' CNTMT, 12 PUMP BAY	

AND

1-CVC-516-CV	SHUT (1)	1C07	

OR

1-CVC-284	LOCKED SHUT	12 PUMP BAY, BETWEEN CVC-515-CV **AND** CVC-516-CV	
1-CVC-283	LOCKED SHUT	12 PUMP BAY, BETWEEN CVC-515-CV **AND** CVC-516-CV	
1-CVC-515-CV	SHUT (1)	1C07	

(1) **IF NOT** controlled by NO-1-112,
THEN LOG in the Locked Valve Deviation Log

6.1 MECHANICAL PENETRATION CHECKS (Continued)

PENETRATION 2B CVCS CHARGING

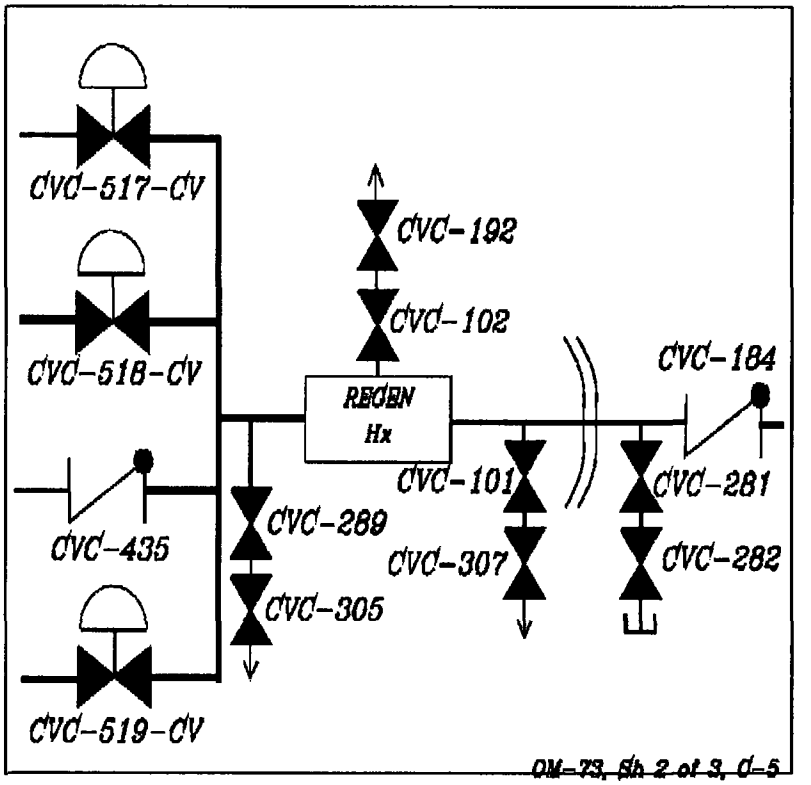

NOTE
Outside Containment Alignment is preferred to provide operational flexibility.

OUTSIDE CONTAINMENT ALIGNMENT

VALVE	POSITION	LOCATION	INITIALS
1-CVC-184	INSTALLED	27' WEST PENET ROOM	
1-CVC-282	LOCKED SHUT	27' WEST PENET ROOM, MIDDLE OF ROOM, 3' FROM CNTMT WALL	
1-CVC-281	LOCKED SHUT	27' WEST PENET ROOM, MIDDLE OF ROOM, 3' FROM CNTMT WALL	

6.1 MECHANICAL PENETRATION CHECKS (Continued)

PENETRATION 2B CVCS CHARGING (continued)

INSIDE CONTAINMENT ALIGNMENT

VALVE	POSITION	LOCATION	INITIALS
1-CVC-192	LOCKED SHUT	12 PUMP BAY, 48' PLATFORM ON TOP OF REGEN HX	
1-CVC-102	LOCKED SHUT	12 PUMP BAY, 48' PLATFORM ON TOP OF REGEN HX	
1-CVC-307	LOCKED SHUT	12' PUMP BAY, BETWEEN CVC-516-CV **AND** REGEN HX	
1-CVC-101	LOCKED SHUT	12' PUMP BAY, BETWEEN CVC-516-CV **AND** REGEN HX	
1-CVC-305	LOCKED SHUT	12' PUMP BAY, SE OF REGEN HX	
1-CVC-289	LOCKED SHUT	12' PUMP BAY, SE OF REGEN HX	
1-CVC-435	INSTALLED	45', WEST, BY REFUELING TUBE AT 1-CVC-519-CV	
1-CVC-517-CV	SHUT (1)	1C07	
1-CVC-518-CV	SHUT (1)	1C07	
1-CVC-519-CV	SHUT (1)	1C07	

(1) **IF NOT** controlled by NO-1-112,
THEN LOG in the Locked Valve Deviation Log

6.1 MECHANICAL PENETRATION CHECKS (Continued)

PENETRATION 49A HYDROGEN SAMPLE

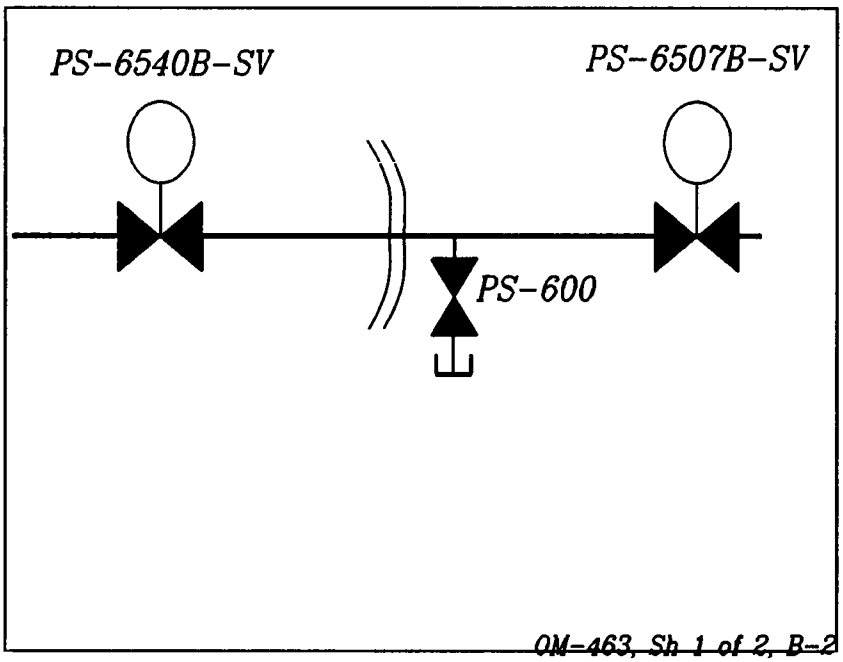

OUTSIDE CONTAINMENT ALIGNMENT

VALVE	POSITION	LOCATION	INITIALS
1-PS-6507B-SV	LOCKED SHUT KEY REMOVED	1C101	
1-PS-600	LOCKED SHUT	5' WEST PENET ROOM, MIDDLE OF ROOM, ON CNTMT WALL	

INSIDE CONTAINMENT ALIGNMENT

1-PS-6540B-SV	LOCKED SHUT KEY REMOVED	1C101	

6.1 MECHANICAL PENETRATION CHECKS (Continued)

PENETRATION 49B HYDROGEN SAMPLE

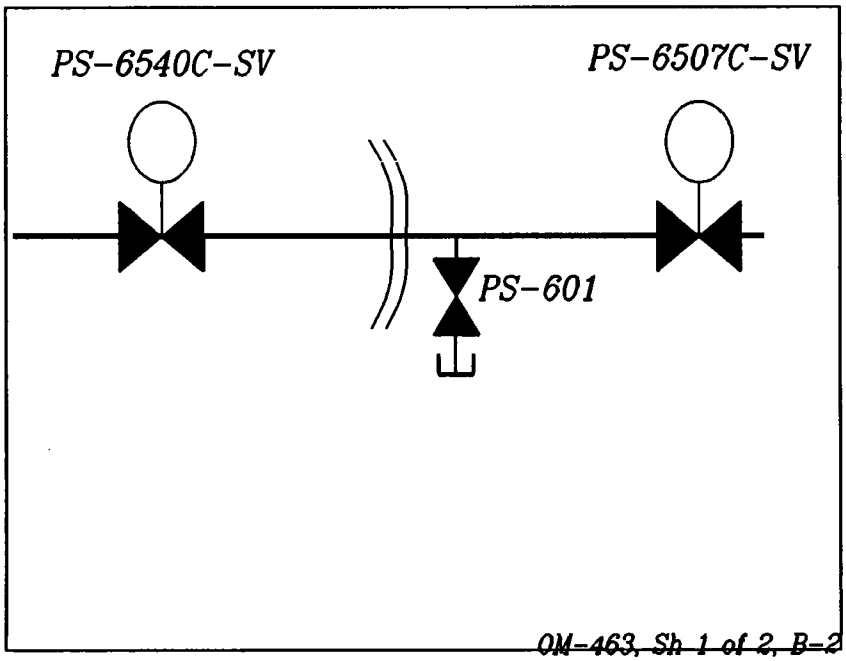

OUTSIDE CONTAINMENT ALIGNMENT

VALVE	POSITION	LOCATION	INITIALS
1-PS-6507C-SV	LOCKED SHUT KEY REMOVED	1C101	
1-PS-601	LOCKED SHUT	5' WEST PENET ROOM, MIDDLE OF ROOM, ON CNTMT WALL	

INSIDE CONTAINMENT ALIGNMENT

1-PS-6540C-SV	LOCKED SHUT KEY REMOVED	1C101	

6.1 MECHANICAL PENETRATION CHECKS (Continued)

PENETRATION 49C HYDROGEN SAMPLE

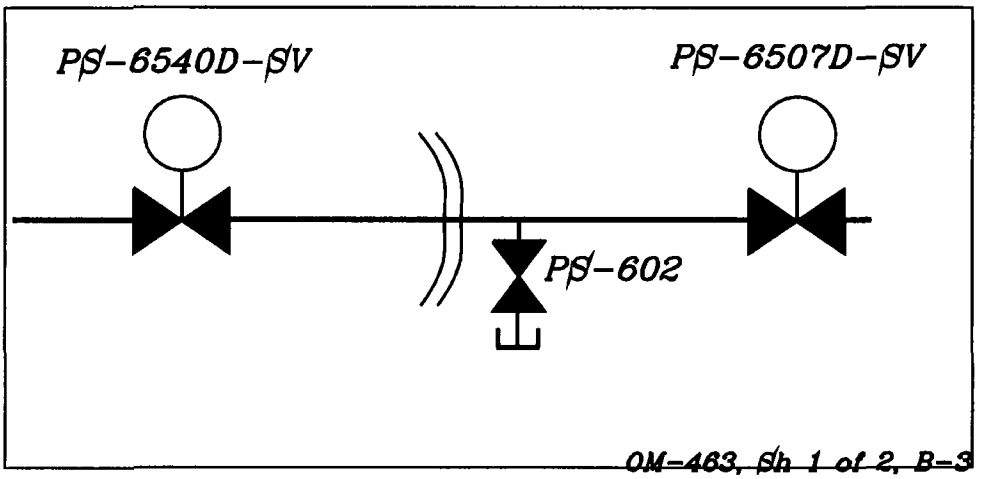

OUTSIDE CONTAINMENT ALIGNMENT

VALVE	POSITION	LOCATION	INITIALS
1-PS-6507D-SV	LOCKED SHUT KEY REMOVED	1C101	
1-PS-602	LOCKED SHUT	5' WEST PENET ROOM, MIDDLE OF ROOM, ON CNTMT WALL	

INSIDE CONTAINMENT ALIGNMENT

1-PS-6540D-SV	LOCKED SHUT KEY REMOVED	1C101	

6.1 MECHANICAL PENETRATION CHECKS (Continued)

PENETRATION 28 12 CONTAINMENT COOLER SRW SUPPLY

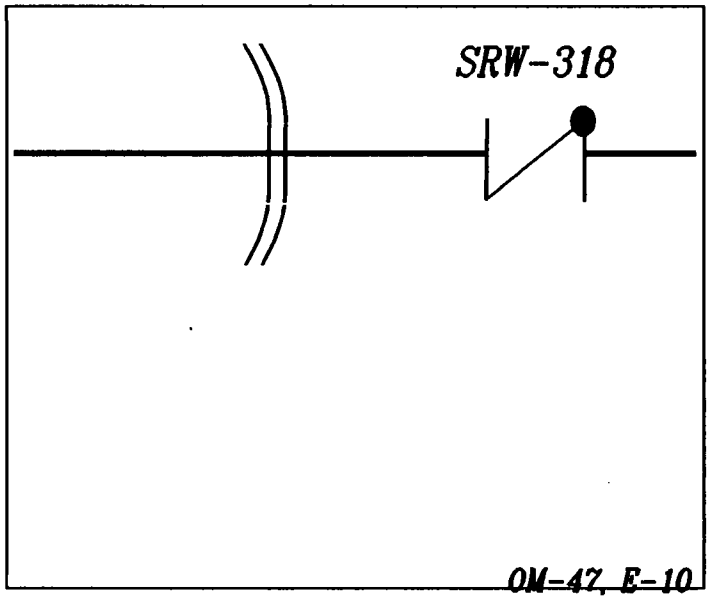

NOTE
Outside Containment Alignment is preferred to provide operational flexibility.

OUTSIDE CONTAINMENT ALIGNMENT

VALVE	POSITION	LOCATION	INITIALS
1-SRW-318	INSTALLED	5' WEST PENET ROOM, NEAR EAST WALL	

OR

SRW is in service with flow through this penetration.	

INSIDE CONTAINMENT ALIGNMENT

- - - - - - -	- - - - - - - - -	NONE - - - - - - - - - - - - -	- - - -

6.1 MECHANICAL PENETRATION CHECKS (Continued)

PENETRATION 32 12 CONTAINMENT COOLER SRW RETURN

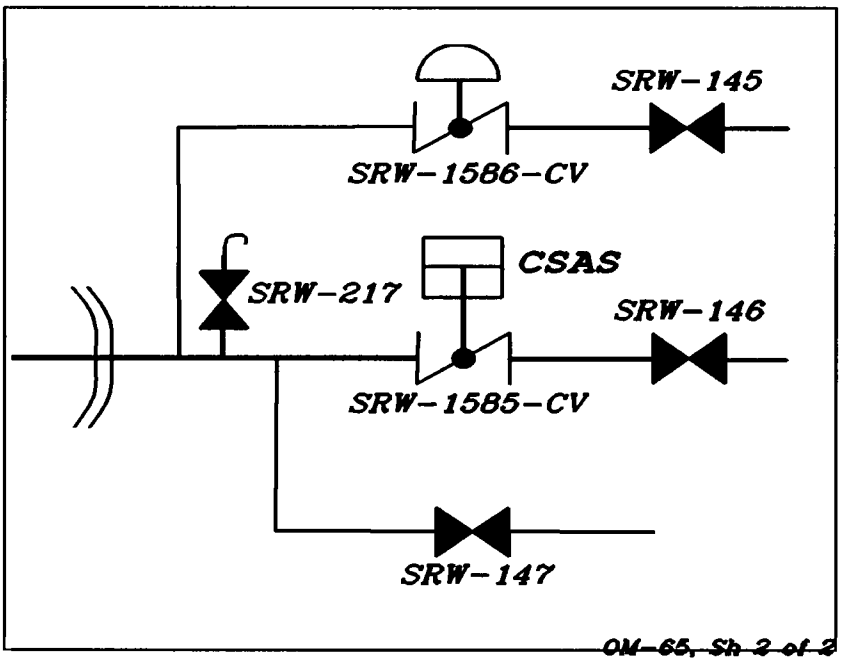

OUTSIDE CONTAINMENT ALIGNMENT

VALVE	POSITION	LOCATION	INITIALS
1-SRW-217	LOCKED SHUT	27' WEST PENET ROOM, W WALL	
1-SRW-147	LOCKED SHUT	27' WEST PENET ROOM, W WALL	
1-SRW-145	SHUT (1)	27' WEST PENET ROOM, W WALL	
1-SRW-146	SHUT (1)	27' WEST PENET ROOM, W WALL	
1-SRW-1585-CV	INSTALLED	27' WEST PENET ROOM	
1-SRW-1586-CV	INSTALLED	27' WEST PENET ROOM	

(1) IF NOT controlled by NO-1-112,
THEN LOG in the Locked Valve Deviation Log

OR

SRW is in service with flow through this penetration.	

6.1 MECHANICAL PENETRATION CHECKS (Continued)

PENETRATION 32 12 CONTAINMENT COOLER SRW RETURN (continued)

INSIDE CONTAINMENT ALIGNMENT

- - - - - - -	- - - - - - - - -	NONE - - - - - - - - - - - - -	- - - - -

6.1 MECHANICAL PENETRATION CHECKS (Continued)

PENETRATION 27 14 CONTAINMENT COOLER SRW SUPPLY

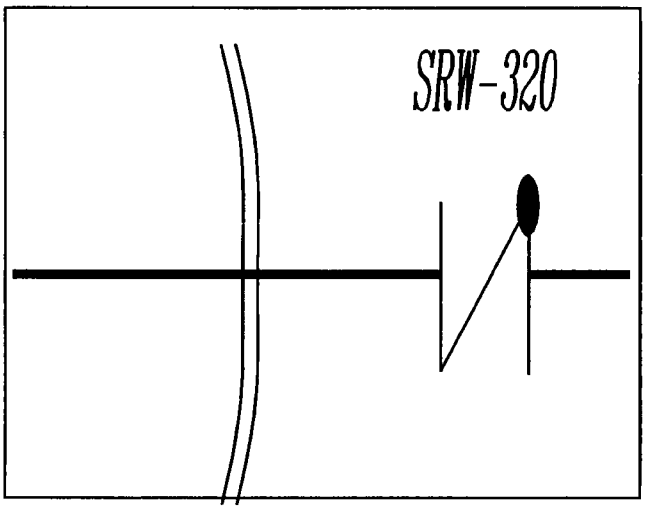

NOTE
Outside Containment Alignment is preferred to provide operational flexibility.

OUTSIDE CONTAINMENT ALIGNMENT

VALVE	POSITION	LOCATION	INITIALS
1-SRW-320	INSTALLED	5' WEST PENET ROOM, OVERHEAD, UNDERNEATH 27' DECK GRATING	

OR

SRW is in service with flow through this penetration.	

INSIDE CONTAINMENT ALIGNMENT

- - - - - - -	- - - - - - - - -	NONE- - - - - - - - - - - - -	- - - -

6.1 MECHANICAL PENETRATION CHECKS (Continued)

PENETRATION 31 14 CONTAINMENT COOLER SRW RETURN

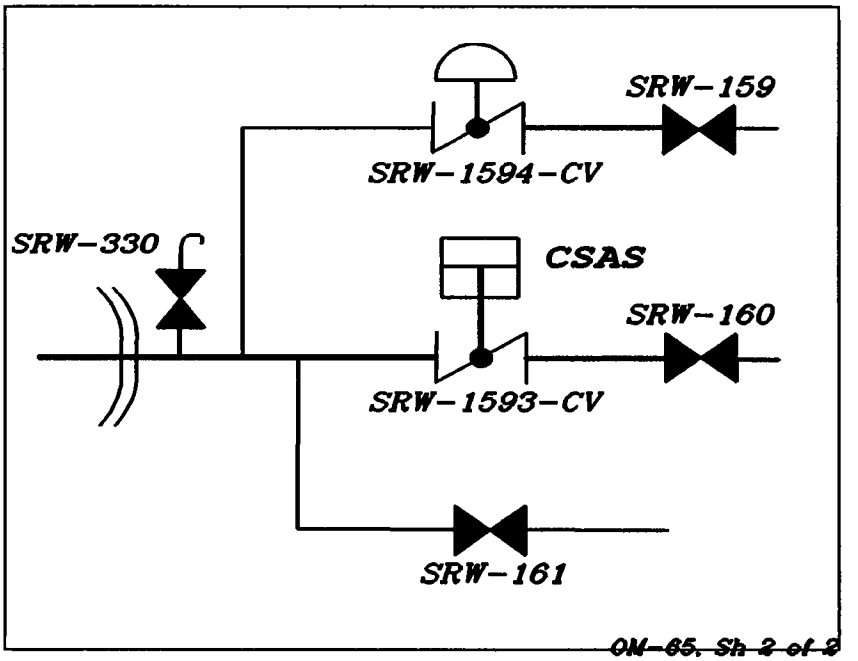

OUTSIDE CONTAINMENT ALIGNMENT

VALVE	POSITION	LOCATION	INITIALS
1-SRW-330	LOCKED SHUT	27' WEST PENET ROOM, W WALL	
1-SRW-161	LOCKED SHUT	27' WEST PENET ROOM, W WALL	
1-SRW-159	SHUT (1)	27' WEST PENET ROOM, W WALL	
1-SRW-160	SHUT (1)	27' WEST PENET ROOM, W WALL	
1-SRW-1593-CV	INSTALLED	27' WEST PENET ROOM, W WALL	
1-SRW-1594-CV	INSTALLED	27' WEST PENET ROOM, W WALL	

(1) **IF NOT** controlled by NO-1-112,
THEN LOG in the Locked Valve Deviation Log

OR

SRW is in service with flow through this penetration.	

6.1 MECHANICAL PENETRATION CHECKS (Continued)

PENETRATION 31 14 CONTAINMENT COOLER SRW RETURN (continued)

INSIDE CONTAINMENT ALIGNMENT

- - - - - - -	- - - - - - - - -	NONE - - - - - - - - - - - - -	- - - - -

6.1 MECHANICAL PENETRATION CHECKS (Continued)

27' EAST PENETRATION ROOM

(VIEW FROM OUTSIDE CONTAINMENT - SOUTH END)

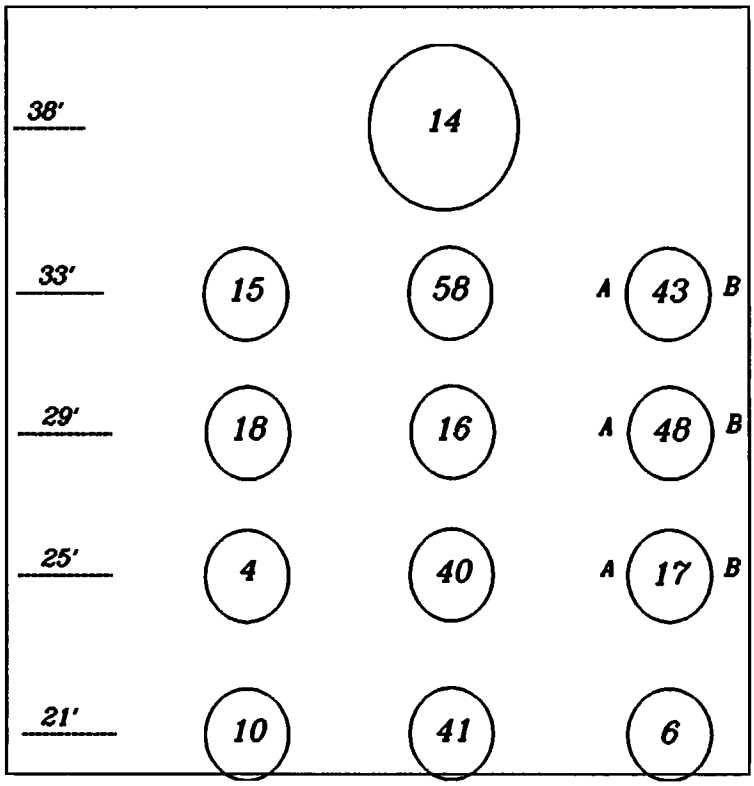

	14 - CNTMT PURGE	
15 - CNTMT ATMOS RMS	58 - SPARE	43 - 11 SG BLOWDOWN
18-COMPONENT COOLING	16-COMPONENT COOLING	48 - H_2 PURGE
4 - SAFETY INJECTION	40- SPARE	17 - 12 SG BLOWDOWN
10-CONTAINMENT SPRAY	41-SHUTDOWN COOLING	6- SAFETY INJECTION

6.1 MECHANICAL PENETRATION CHECKS (Continued)

PENETRATION 15 CONTAINMENT ATMOSPHERE RMS

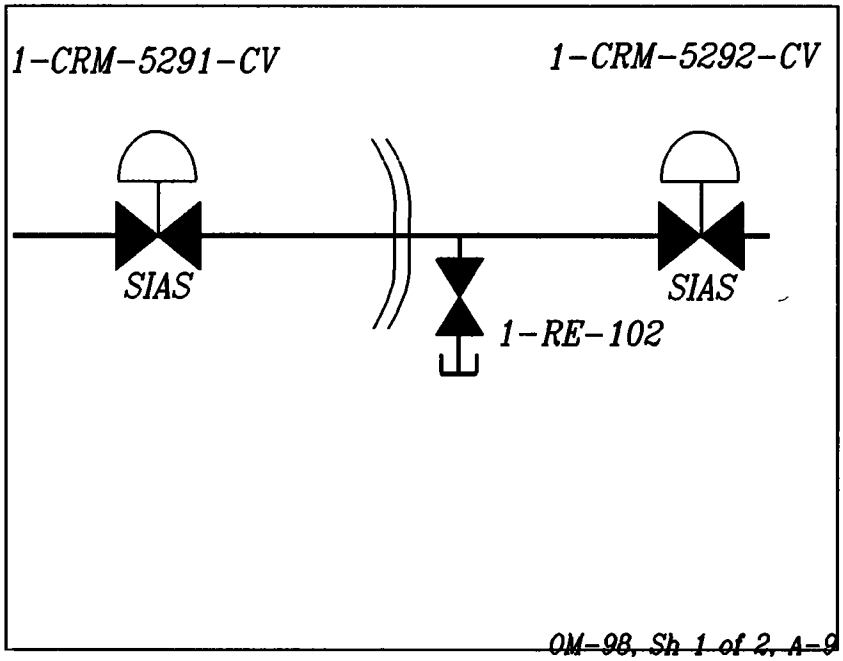

OUTSIDE CONTAINMENT ALIGNMENT

VALVE	POSITION	LOCATION	INITIALS
1-RE-102	LOCKED SHUT	27' EAST PENET ROOM, SW CORNER	
1-CRM-5292-CV	SHUT	1C10	

INSIDE CONTAINMENT ALIGNMENT

1-CRM-5291-CV	SHUT	1C10	

6.1 MECHANICAL PENETRATION CHECKS (Continued)

PENETRATION 18 COMPONENT COOLING RETURN

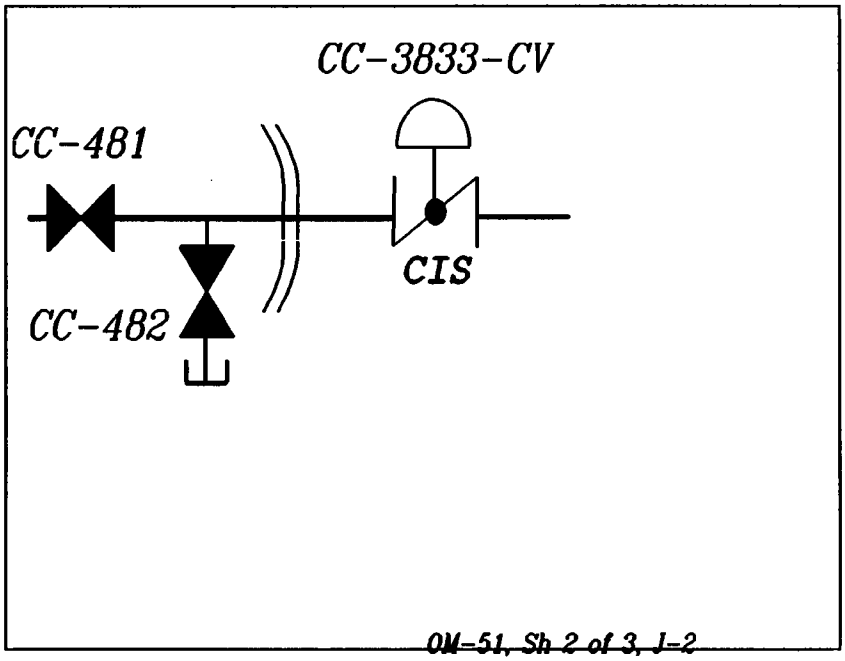

OUTSIDE CONTAINMENT ALIGNMENT

VALVE	POSITION	LOCATION	INITIALS
1-CC-3833-CV	SHUT (1)	1C10	

OR

CC is in service with flow through this penetration	

INSIDE CONTAINMENT ALIGNMENT

1-CC-482	LOCKED SHUT	BASEMENT, 30' ABOVE SG RECIRC RIG	
1-CC-481	SHUT (1)	BASEMENT, 30' ABOVE SG RECIRC RIG	

(1) IF NOT controlled by NO-1-112,
THEN LOG in the Locked Valve Deviation Log

6.1 MECHANICAL PENETRATION CHECKS (Continued)

PENETRATION 10 CONTAINMENT SPRAY

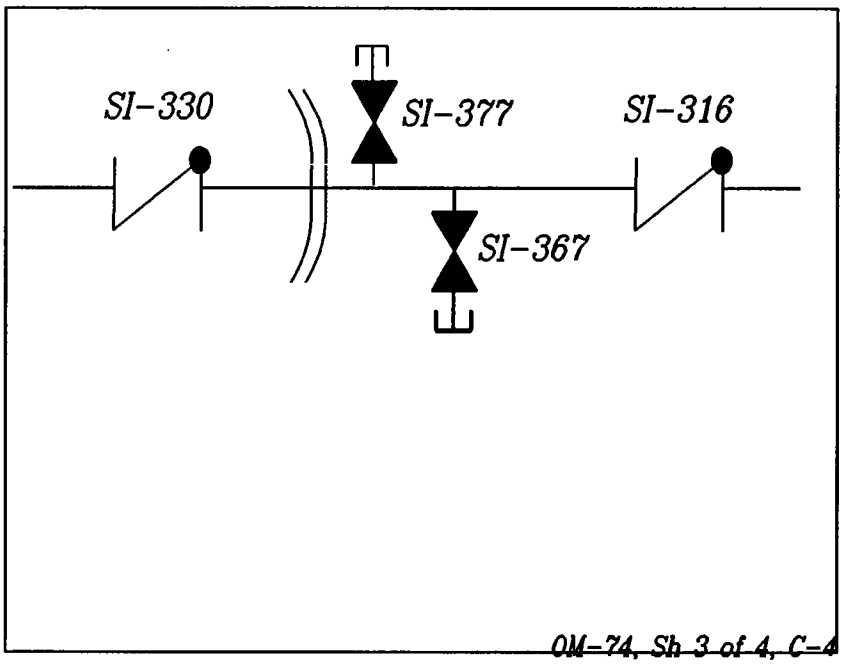

OUTSIDE CONTAINMENT ALIGNMENT

VALVE	POSITION	LOCATION	INITIALS
1-SI-367	LOCKED SHUT	5' EAST PENET ROOM, AT CNTMT WALL, BY DOOR	
1-SI-377	LOCKED SHUT	5' EAST PENET ROOM, AT CNTMT WALL, BY DOOR	
1-SI-316	INSTALLED	5' EAST PENET ROOM, AT CNTMT WALL, BY DOOR	

INSIDE CONTAINMENT ALIGNMENT

1-SI-330	INSTALLED	21' CNTMT, EAST	

6.1 MECHANICAL PENETRATION CHECKS (Continued)

PENETRATION 14 CONTAINMENT PURGE EXHAUST

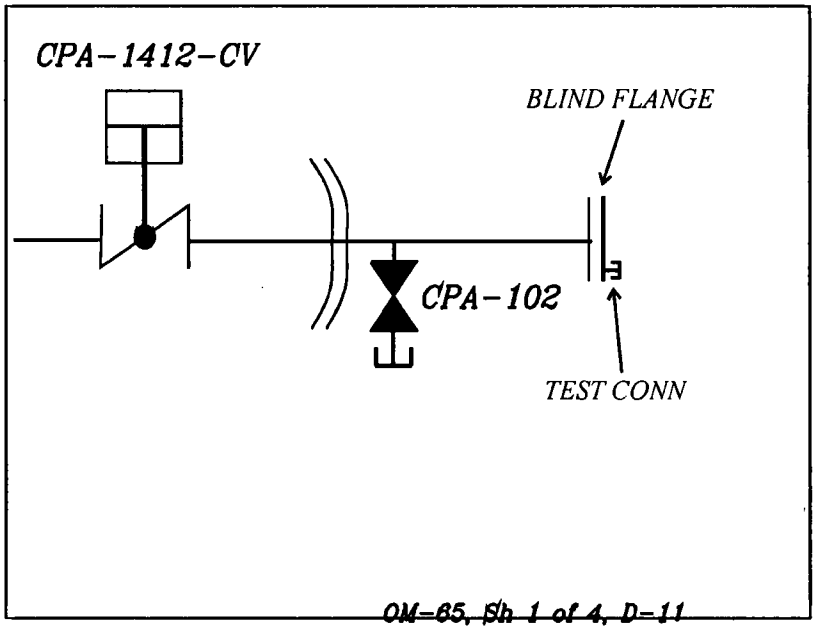

CONTAINMENT ALIGNMENT

VALVE	POSITION	LOCATION	INITIALS
1-CPA-1412-CV	SHUT/OPEN*	1C10	

* 1-CPA-1412-CV may be open during movement of irradiated fuel assemblies within containment, IF CRS A is operable, OR IF NO-1-114 controls are in place, AND capable of being shut. (Circle position PER TS 3.9.3 OR NO-1-114)

6.1 MECHANICAL PENETRATION CHECKS (Continued)

PENETRATION 14 CONTAINMENT PURGE EXHAUST (continued)

OR

VALVE	POSITION	LOCATION	INITIALS
1-CPA-102	LOCKED SHUT	27' EAST PENET ROOM, SW CORNER, 10' OVERHEAD S SIDE OF PURGE PIPE	
BLIND FLANGE	INSTALLED*	27' EAST PENET ROOM, S END	
FLANGE TEST CONNECTION	CAPPED	27' EAST PENET ROOM, S END	

* Every other bolt may be removed.

6.1 MECHANICAL PENETRATION CHECKS (Continued)

PENETRATION 16 COMPONENT COOLING SUPPLY

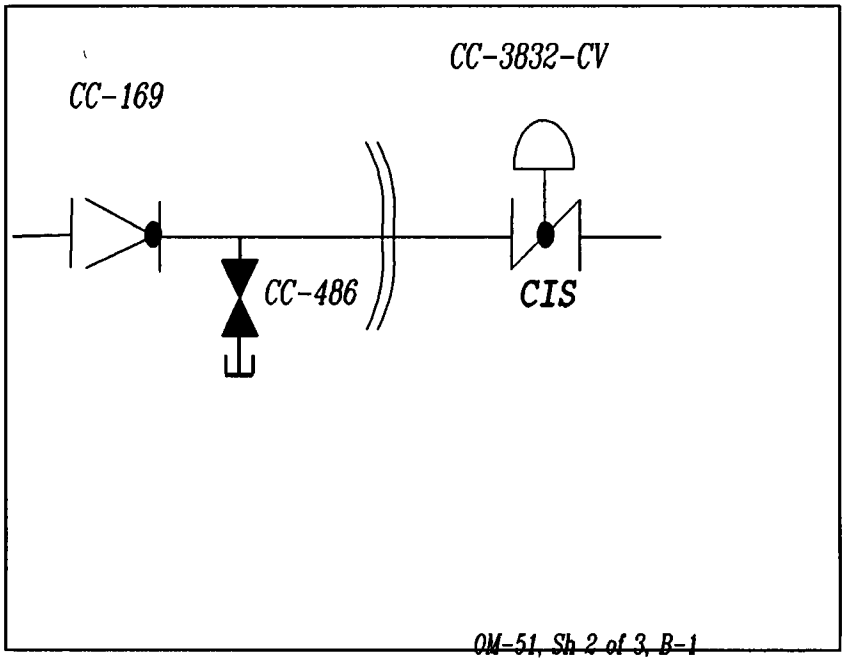

NOTE
Inside Containment Alignment is preferred to provide operational flexibility.

OUTSIDE CONTAINMENT ALIGNMENT

VALVE	POSITION	LOCATION	INITIALS
1-CC-3832-CV	SHUT (1)	1C10	

(1) IF NOT controlled by NO-1-112,
THEN LOG in the Locked Valve Deviation Log

OR

CC is in service with flow through this penetration	

6.1 MECHANICAL PENETRATION CHECKS (Continued)

PENETRATION 16 COMPONENT COOLING SUPPLY (continued)

INSIDE CONTAINMENT ALIGNMENT

1-CC-169	INSTALLED	27' CNTMT E STAIRS	
1-CC-486	LOCKED SHUT	27' CNTMT E STAIRS	

6.1 MECHANICAL PENETRATION CHECKS (Continued)

PENETRATION 41 SHUTDOWN COOLING

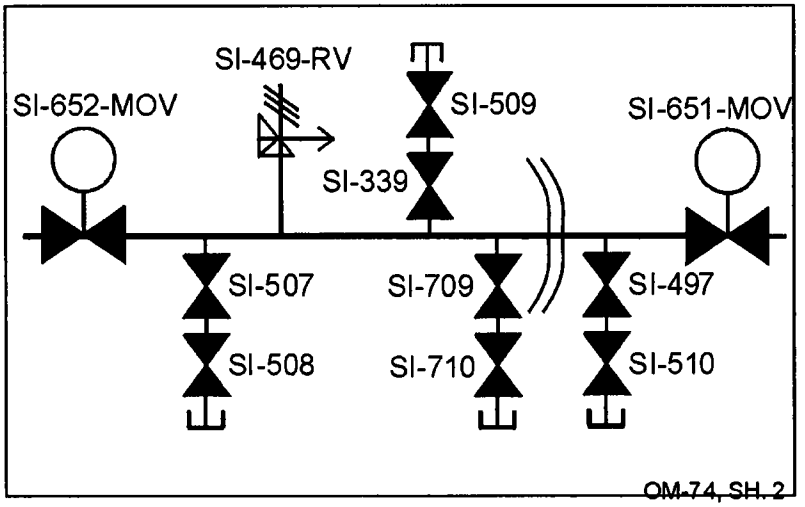

OUTSIDE CONTAINMENT ALIGNMENT

VALVE	POSITION	LOCATION	INITIALS
1-SI-510	LOCKED SHUT	27' EAST PENET ROOM, 1' UNDER DECK, W OF 1-SI-651-MOV	
1-SI-497	LOCKED SHUT	27' EAST PENET ROOM, 1' UNDER DECK, W OF 1-SI-651-MOV	
1-SI-651-MOV	LOCKED SHUT KEY REMOVED	1C09	

OR

SDC IS IN SERVICE WITH FLOW THROUGH THIS PENETRATION	

6.1 MECHANICAL PENETRATION CHECKS (Continued)

PENETRATION 41 SHUTDOWN COOLING (continued)

INSIDE CONTAINMENT ALIGNMENT

VALVE	POSITION	LOCATION	INITIALS
1-SI-710	LOCKED SHUT	21' CNTMT, E AT PENET 41	
1-SI-709	LOCKED SHUT	21' CNTMT, E AT PENET 41	
1-SI-509	LOCKED SHUT	SE QUAD, AT PLATFORM 10' UNDER 45' PLATFORM	
1-SI-339	LOCKED SHUT	SE QUAD, AT PLATFORM 10' UNDER 45' PLATFORM	
1-SI-508	LOCKED SHUT	20' S CNTMT NEAR WALL	
1-SI-507	LOCKED SHUT	20' S CNTMT NEAR WALL	
1-SI-469-RV	INSTALLED	BASEMENT, SE, 30' OVERHEAD	
1-SI-652-MOV	LOCKED SHUT KEY REMOVED	1C09	

6.1 MECHANICAL PENETRATION CHECKS (Continued)

PENETRATION 48A HYDROGEN PURGE

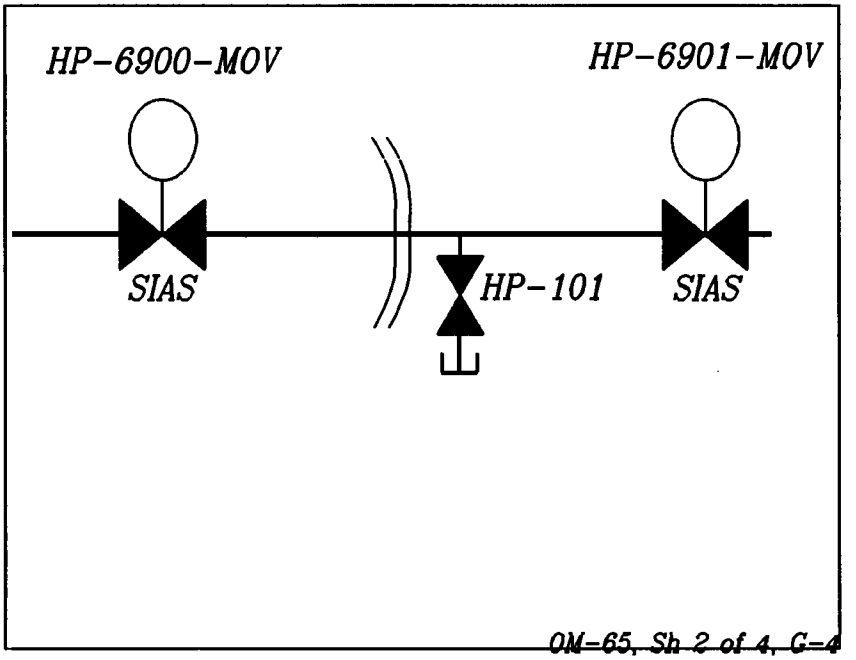

NOTE

- **Both** 1-HP-6900-MOV and 1-HP-6901-MOV are required to be shut to comply with TS 3.9.3. **[B0306]**
- Other verifications only require that 1-HP-6901-MOV **AND** 1-HP-101, **OR** 1-HP-6900-MOV, be verified. The valves **OR** valve not verified may be N/A'd.

CONTAINMENT ALIGNMENT

VALVE	POSITION	LOCATION	INITIALS
1-HP-6901-MOV	LOCKED SHUT KEY REMOVED	1C10	
1-HP-6900-MOV	LOCKED SHUT KEY REMOVED	1C10	
1-HP-101	LOCKED SHUT	27' EAST PENET ROOM, SW CORNER, 18" FROM CNTMT	

6.1 MECHANICAL PENETRATION CHECKS (Continued)

PENETRATION 48B HYDROGEN PURGE SUPPLY

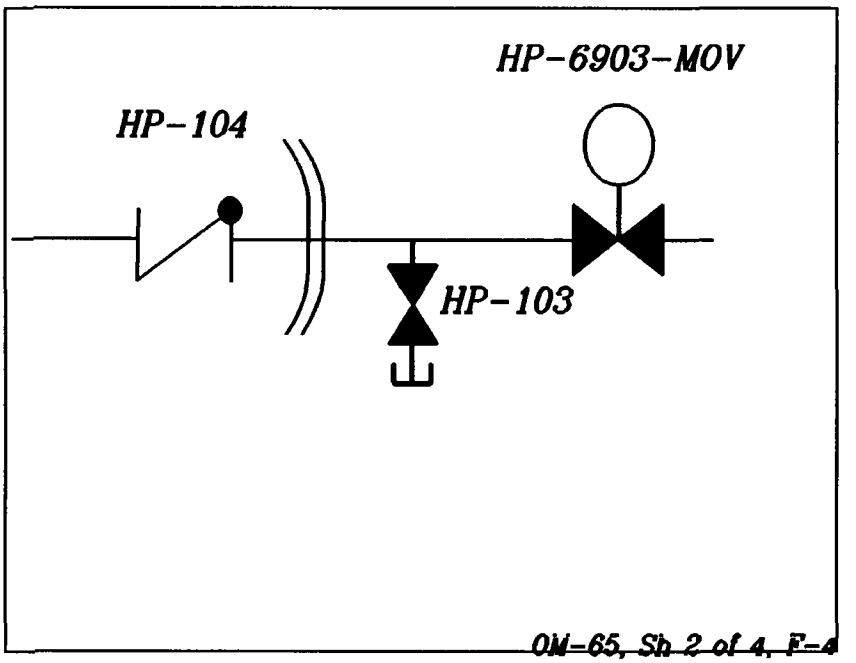

NOTE
Inside Containment Alignment is preferred to provide operational flexibility.

OUTSIDE CONTAINMENT ALIGNMENT

VALVE	POSITION	LOCATION	INITIALS
1-HP-103	LOCKED SHUT	27' EAST PENET ROOM, SW CORNER	
1-HP-6903-MOV	LOCKED SHUT KEY REMOVED	1C100	

INSIDE CONTAINMENT ALIGNMENT

1-HP-104	INSTALLED	N OF E STAIRS	

6.1 MECHANICAL PENETRATION CHECKS (Continued)

PENETRATION 4 SAFETY INJECTION

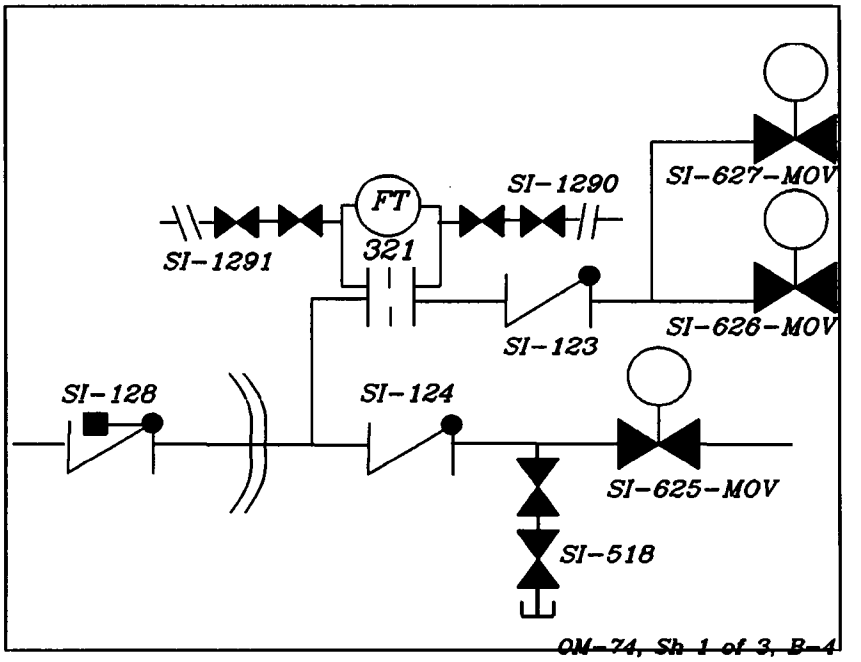

NOTE
Inside Containment Alignment is preferred to provide operational flexibility.

OUTSIDE CONTAINMENT ALIGNMENT

VALVE	POSITION	LOCATION	INITIALS
1-SI-1290	LOCKED SHUT	OUTSIDE DOOR TO 5' EAST PENET ROOM	
1-SI-1291	LOCKED SHUT	OUTSIDE DOOR TO 5' EAST PENET ROOM	
1-FT-321	FT **AND** TEST CONN CAPS INSTALLED	OUTSIDE DOOR TO 5' EAST PENET ROOM	
1-SI-123	INSTALLED	27' EAST PENET ROOM, JUST INSIDE DOOR UNDER DECK	
1-SI-124	INSTALLED	27' EAST PENET ROOM, JUST INSIDE DOOR UNDER DECK	

6.1 MECHANICAL PENETRATION CHECKS (Continued)

PENETRATION 4 SAFETY INJECTION (continued)

OR

SDC IS IN SERVICE WITH FLOW THROUGH THIS PENETRATION	

INSIDE CONTAINMENT ALIGNMENT

VALVE	POSITION	LOCATION	INITIALS
1-SI-128	INSTALLED	45' CNTMT, BELOW SIT	

6.1 MECHANICAL PENETRATION CHECKS (Continued)

PENETRATION 6 SAFETY INJECTION

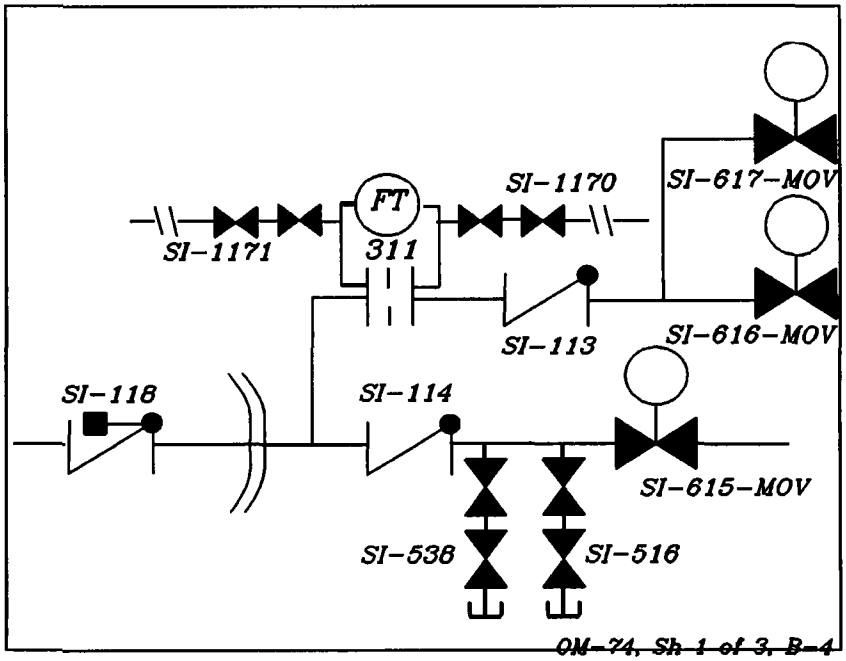

NOTE
Inside Containment Alignment is preferred to provide operational flexibility.

OUTSIDE CONTAINMENT ALIGNMENT

VALVE	POSITION	LOCATION	INITIALS
1-SI-1170	LOCKED SHUT	OUTSIDE DOOR TO 5' EAST PENET ROOM	
1-SI-1171	LOCKED SHUT	OUTSIDE DOOR TO 5' EAST PENET ROOM	
1-FT-311	FT **AND** TEST CONN CAPS INSTALLED	OUTSIDE DOOR TO 5' EAST PENET ROOM	
1-SI-113	INSTALLED	27' EAST PENET ROOM, JUST INSIDE DOOR UNDER DECK	
1-SI-114	INSTALLED	27' EAST PENET ROOM, JUST INSIDE DOOR UNDER DECK	

6.1 MECHANICAL PENETRATION CHECKS (Continued)

PENETRATION 6 SAFETY INJECTION (continued)

OR

SDC is in service with flow through this penetration	

INSIDE CONTAINMENT ALIGNMENT

VALVE	POSITION	LOCATION	INITIALS
1-SI-118	INSTALLED	45' CNTMT, BELOW SIT	

6.1 MECHANICAL PENETRATION CHECKS (Continued)

27' EAST PENETRATION ROOM

(VIEW FROM OUTSIDE CONTAINMENT - NORTH END)

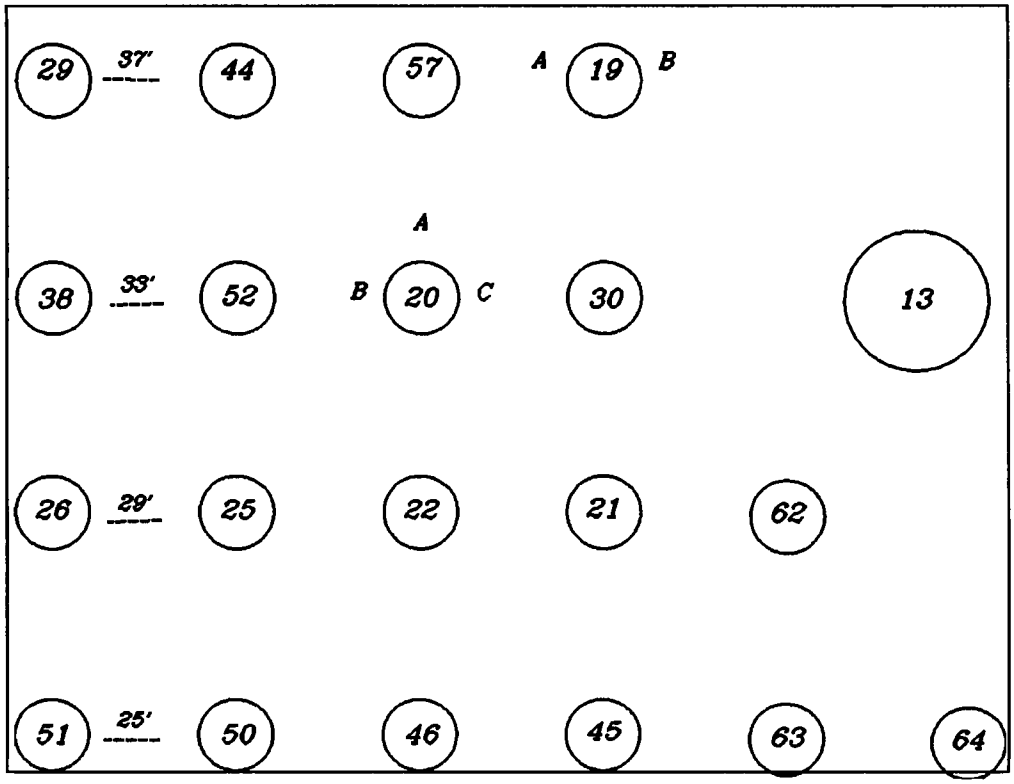

29-SRW FROM CNTMT CLR	44-FIRE HEADER	57-SPARE	19-IA/PA		
38-DI WATER	52-SPARE	20-N_2	30-SRW FROM CNTMT CLR		13-CNTMT PURGE
26-SRW TO CNTMT CLR	25-SRW TO CNTMT CLR	22-AFW TO 11 SG	21-AFW TO 12 SG	62-SPARE	
51-SPARE	50-ILRT	46-SPARE	45-SPARE	63-SPARE	64-SPARE

6.1 MECHANICAL PENETRATION CHECKS (Continued)

PENETRATION 38 DEMINERALIZED WATER

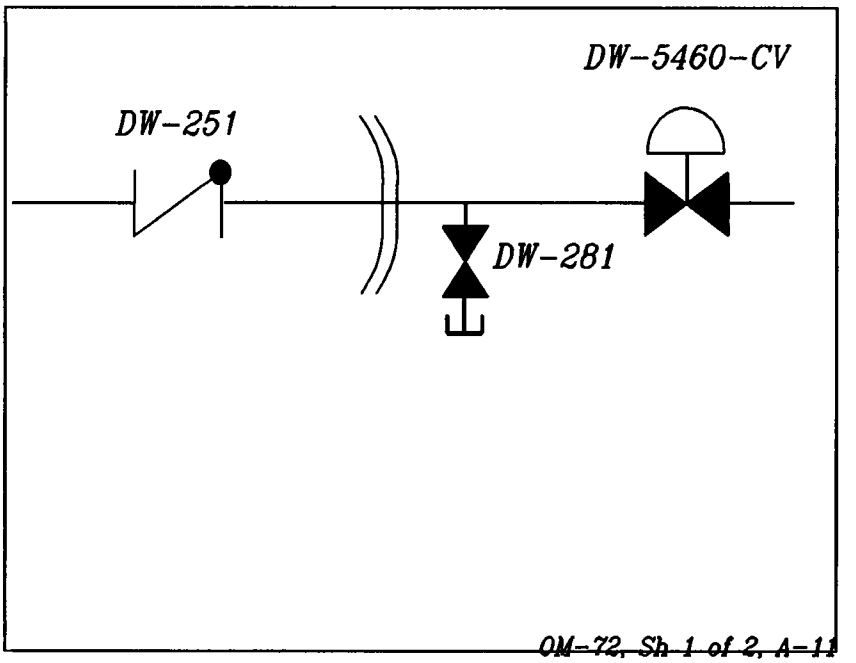

NOTE
Inside Containment Alignment is preferred to provide operational flexibility.

OUTSIDE CONTAINMENT ALIGNMENT

VALVE	POSITION	LOCATION	INITIALS
1-DW-281	LOCKED SHUT	27' EAST PENET ROOM, W OF FIRE MOV	
1-DW-5460-CV	SHUT	1C10	

OR

DI water system is in service with flow through this penetration	

6.1 MECHANICAL PENETRATION CHECKS (Continued)

PENETRATION 38 DEMINERALIZED WATER (continued)

INSIDE CONTAINMENT ALIGNMENT

1-DW-251	INSTALLED	ABOVE PZR QUENCH TANK	

6.1 MECHANICAL PENETRATION CHECKS (Continued)

PENETRATION 44 FIRE PROTECTION

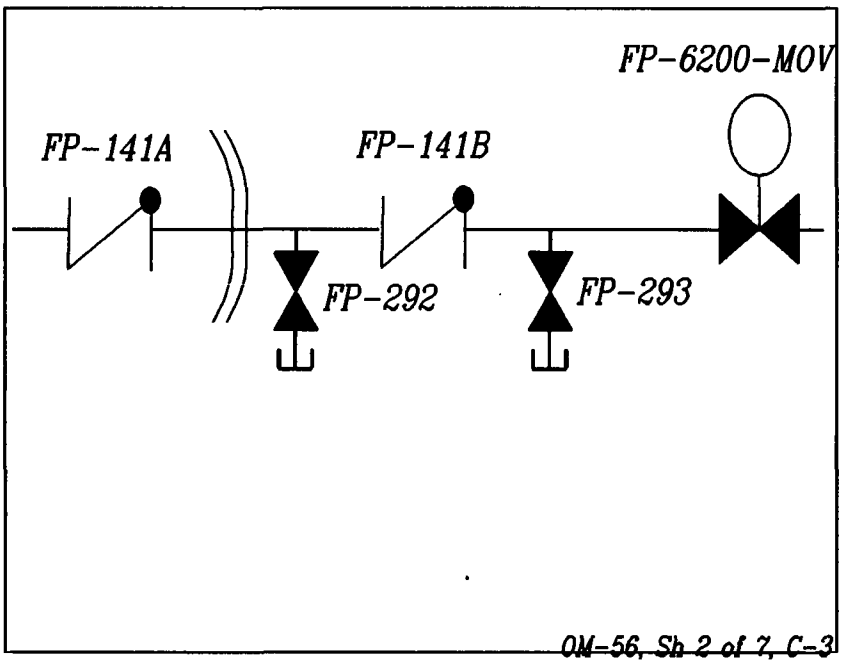

OUTSIDE CONTAINMENT ALIGNMENT

VALVE	POSITION	LOCATION	INITIALS
0-FP-292	LOCKED SHUT	27' EAST PENET ROOM, NW OF FIRE MOV, 9' OVERHEAD	
0-FP-141B	INSTALLED	27' EAST PENET ROOM NW OF FIRE MOV, 9' OVERHEAD	

INSIDE CONTAINMENT ALIGNMENT

0-FP-141A	INSTALLED	AT PENET 44	

6.1 MECHANICAL PENETRATION CHECKS (Continued)

PENETRATION 50 ILRT PRESSURIZATION

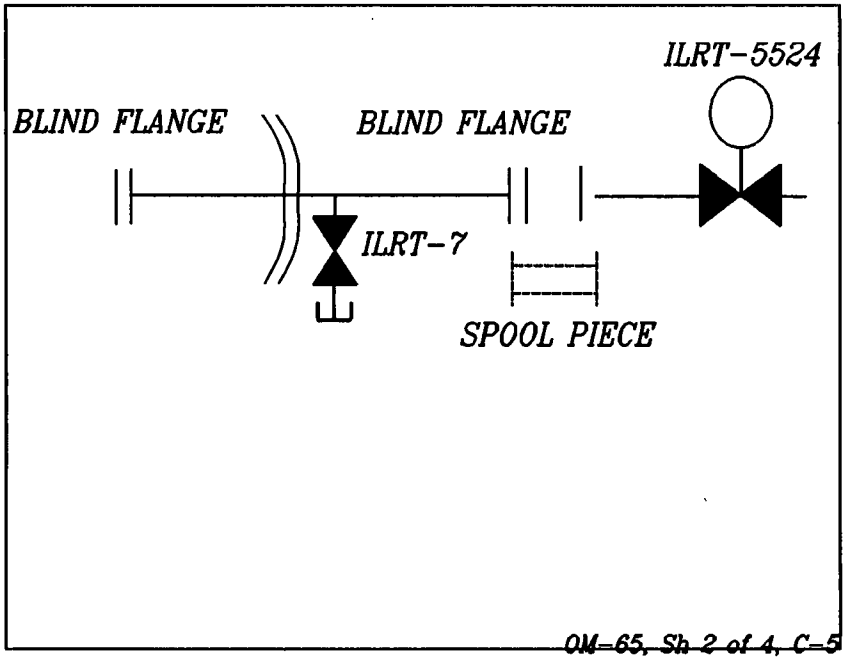

OUTSIDE CONTAINMENT ALIGNMENT

VALVE	POSITION	LOCATION	INITIALS
1-ILRT-7	LOCKED SHUT	27' EAST PENET ROOM, AT DECKING UNDER FIRE PENET	
BLIND FLANGE	INSTALLED	27' EAST PENET ROOM, AT DECKING UNDER FIRE PENET	

6.1 MECHANICAL PENETRATION CHECKS (Continued)

PENETRATION 50 ILRT PRESSURIZATION (continued)

OR

OUTSIDE CONTAINMENT ALIGNMENT

SPOOL PIECE	INSTALLED	27' EAST PENET ROOM, AT DECKING UNDER FIRE PENET	
1-ILRT-5524-MOV	SHUT/OPEN*	ILRT TEST CONSOLE	
1-ILRT-7	LOCKED SHUT	27' EAST PENET ROOM, AT DECKING UNDER FIRE PENET	

* IF Spoolpiece is installed and 1-ILRT-5524-MOV is OPEN, THEN **VERIFY** portable air compressor(s) supplying pressurized air through 1-ILRT-5524-MOV to Containment AND a reverse flow check valve exists in the airline between the temporary air compressor and the Containment. _____

INSIDE CONTAINMENT ALIGNMENT

BLIND FLANGE	INSTALLED	BASEMENT, E SIDE, 25' OVERHEAD	

6.1 MECHANICAL PENETRATION CHECKS (Continued)

PENETRATION 20A N_2 TO SITs

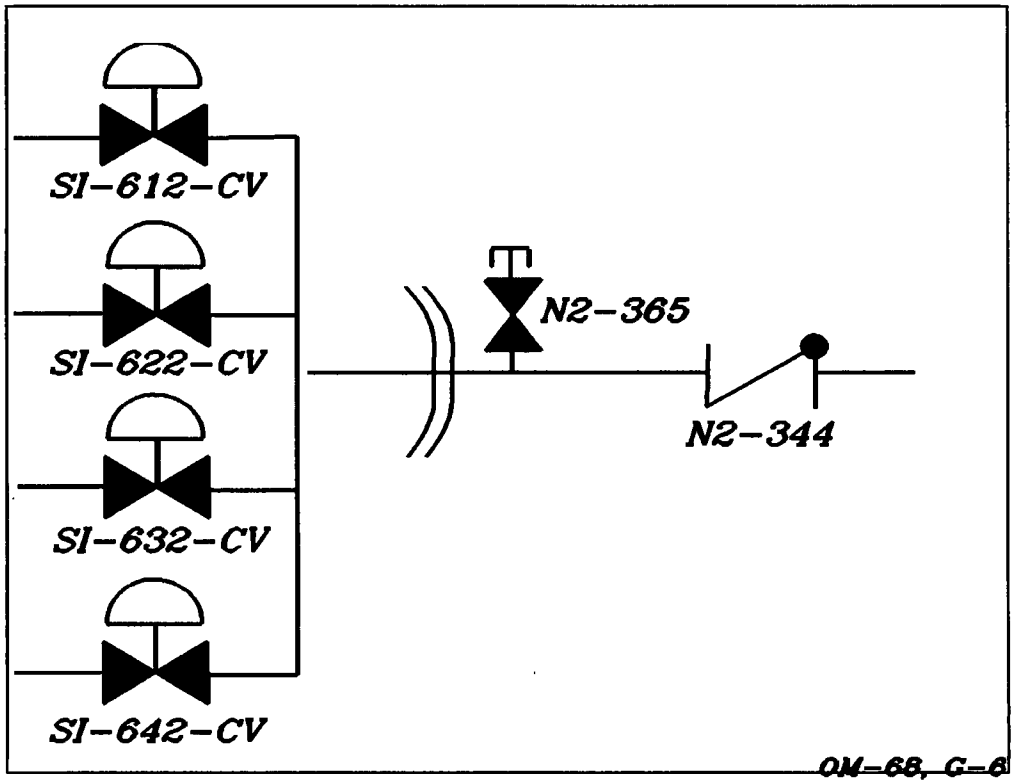

OUTSIDE CONTAINMENT ALIGNMENT

VALVE	POSITION	LOCATION	INITIALS
O-N_2-365	LOCKED SHUT	27' EAST PENET ROOM, 33' LEVEL, BEHIND AFW CVs	
O-N_2-344	INSTALLED	27' EAST PENET ROOM	

INSIDE CONTAINMENT ALIGNMENT

- - - - - - -	- - - - - - - - -	NONE - - - - - - - - - - - - -	- - - - -

6.1 MECHANICAL PENETRATION CHECKS (Continued)

PENETRATION 20B N_2 TO RCDT

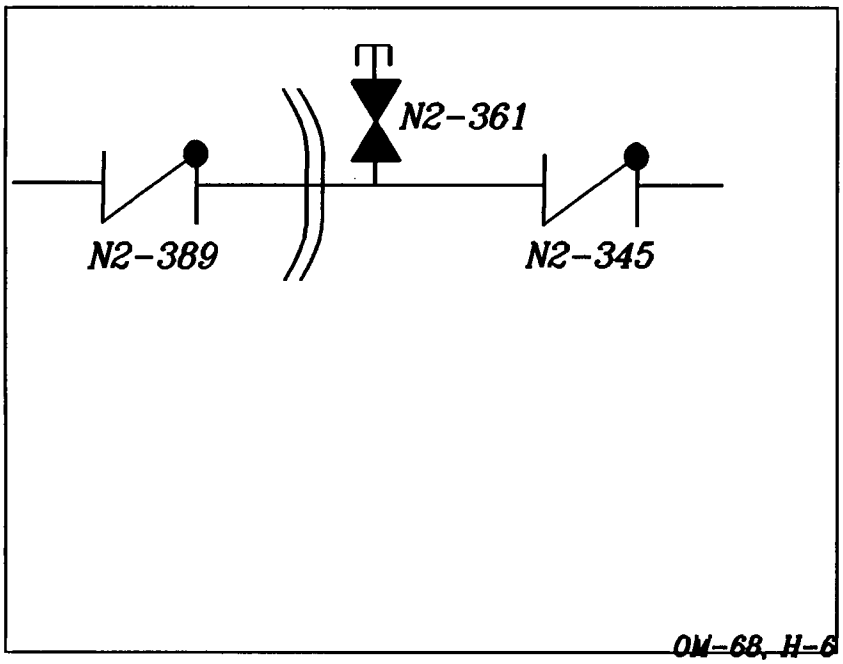

OUTSIDE CONTAINMENT ALIGNMENT

VALVE	POSITION	LOCATION	INITIALS
O-N_2-361	LOCKED SHUT	27' EAST PENET ROOM, 33' LEVEL, BEHIND AFW CVs	
O-N_2-345	INSTALLED	27' EAST PENET ROOM	

INSIDE CONTAINMENT ALIGNMENT

O-N_2-389	INSTALLED	AT PENET 20B	

6.1 MECHANICAL PENETRATION CHECKS (Continued)

PENETRATION 20C N_2 TO SGs AND QUENCH TANK

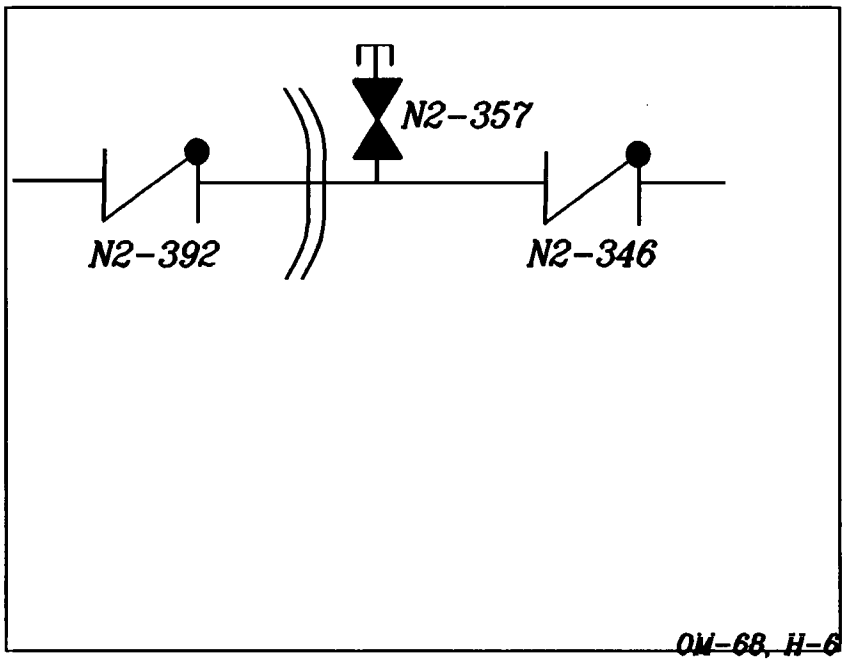

OUTSIDE CONTAINMENT ALIGNMENT

VALVE	POSITION	LOCATION	INITIALS
O-N_2-357	LOCKED SHUT	27' EAST PENET ROOM, 33' LEVEL, BEHIND AFW CVs	
O-N_2-346	INSTALLED	27' EAST PENET ROOM	

INSIDE CONTAINMENT ALIGNMENT

O-N_2-392	INSTALLED	AT PENET 20C	

6.1 MECHANICAL PENETRATION CHECKS (Continued)

PENETRATION 19A INSTRUMENT AIR

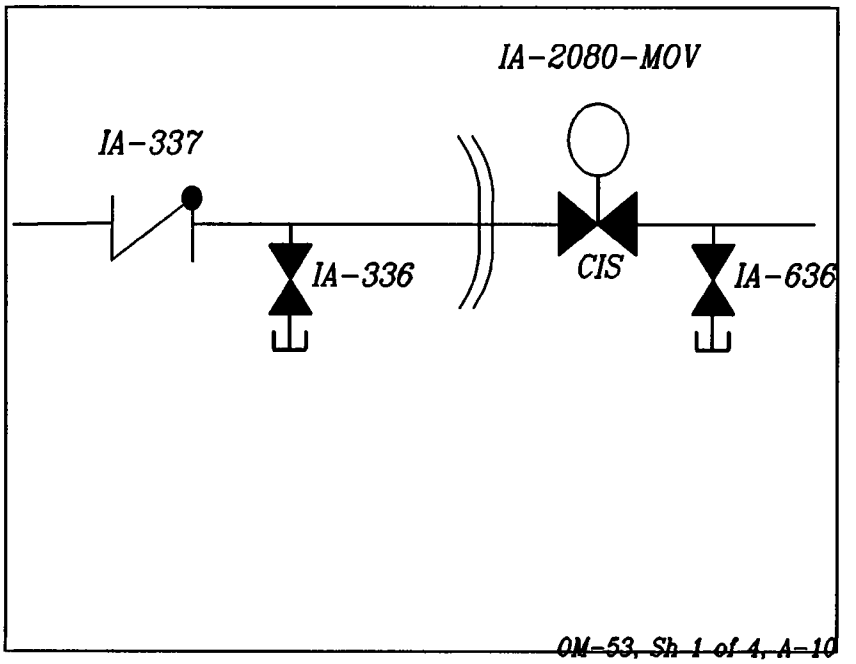

NOTE
Inside Containment Alignment is preferred to provide operational flexibility.

OUTSIDE CONTAINMENT ALIGNMENT

VALVE	POSITION	LOCATION	INITIALS
1-IA-2080-MOV	SHUT (1)	1C10	

(1) **IF NOT** controlled by NO-1-112,
THEN LOG in the Locked Valve Deviation Log

OR

IF 1-IA-2080-MOV is open,
THEN VERIFY the IA header pressurized as follows:

a. **UNCAP AND CRACK OPEN** 1-IA-636. _____

b. **CHECK** pressurized air vents from the line. _____

c. **SHUT AND CAP** 1-IA-636. _____

6.1 MECHANICAL PENETRATION CHECKS (Continued)

PENETRATION 19A INSTRUMENT AIR (continued)

INSIDE CONTAINMENT ALIGNMENT

VALVE	POSITION	LOCATION	INITIALS
1-IA-336	LOCKED SHUT	N OF E STAIRWELL, AT PLATFORM 10' UNDER DECKING	
1-IA-337	INSTALLED	NE, 38' BY PURGE SUPPLY	

6.1 MECHANICAL PENETRATION CHECKS (Continued)

PENETRATION 19B PLANT AIR

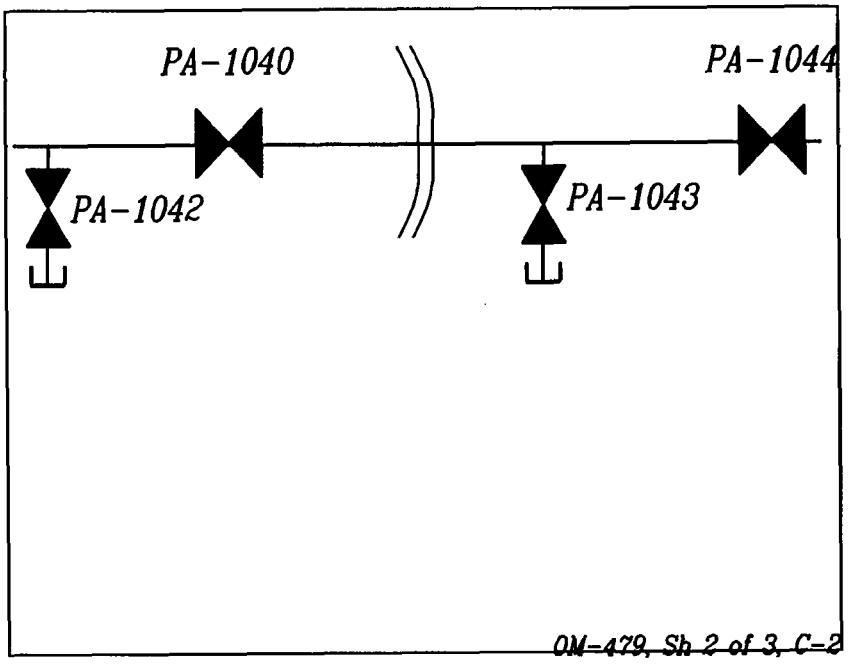

OUTSIDE CONTAINMENT ALIGNMENT

VALVE	POSITION	LOCATION	INITIALS
1-PA-1043	LOCKED SHUT	27' EAST PENET ROOM, 10' OVERHEAD, S OF PURGE SUPPLY	
1-PA-1044	LOCKED SHUT	27' EAST PENET ROOM, 10' OVERHEAD, S OF PURGE SUPPLY	

OR

IF 1-PA-1044 is open,
THEN **VERIFY** the PA header pressurized as follows:

a. **UNCAP AND CRACK OPEN** 1-PA-1043. _____

b. **CHECK** pressurized air vents from the line. _____

c. **LOCK SHUT AND CAP** 1-PA-1043. _____

d. **INDEPENDENTLY VERIFY** 1-PA-1043 LOCKED SHUT **AND** CAPPED. _____

6.1 MECHANICAL PENETRATION CHECKS (Continued)

PENETRATION 19B PLANT AIR (continued)

INSIDE CONTAINMENT ALIGNMENT

VALVE	POSITION	LOCATION	INITIALS
1-PA-1040	LOCKED SHUT	N OF E STAIRWELL, AT PLATFORM 10' UNDER DECKING	

6.1 MECHANICAL PENETRATION CHECKS (Continued)

PENETRATION 26 13 CONTAINMENT COOLER SRW SUPPLY

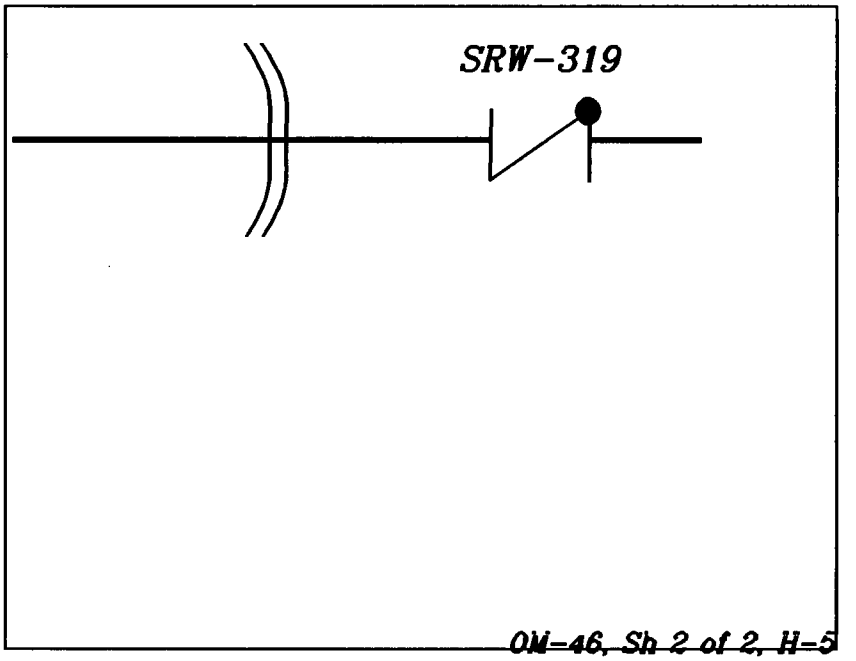

NOTE
Outside Containment Alignment is preferred to provide operational flexibility.

OUTSIDE CONTAINMENT ALIGNMENT

VALVE	POSITION	LOCATION	INITIALS
1-SRW-319	INSTALLED	27' EAST PENET ROOM	

OR

SRW is in service with flow through this penetration.	

INSIDE CONTAINMENT ALIGNMENT

- - - - - - -	- - - - - - - - -	NONE - - - - - - - - - - - - -	- - - -

6.1 MECHANICAL PENETRATION CHECKS (Continued)

PENETRATION 29 13 CONTAINMENT COOLER SRW RETURN

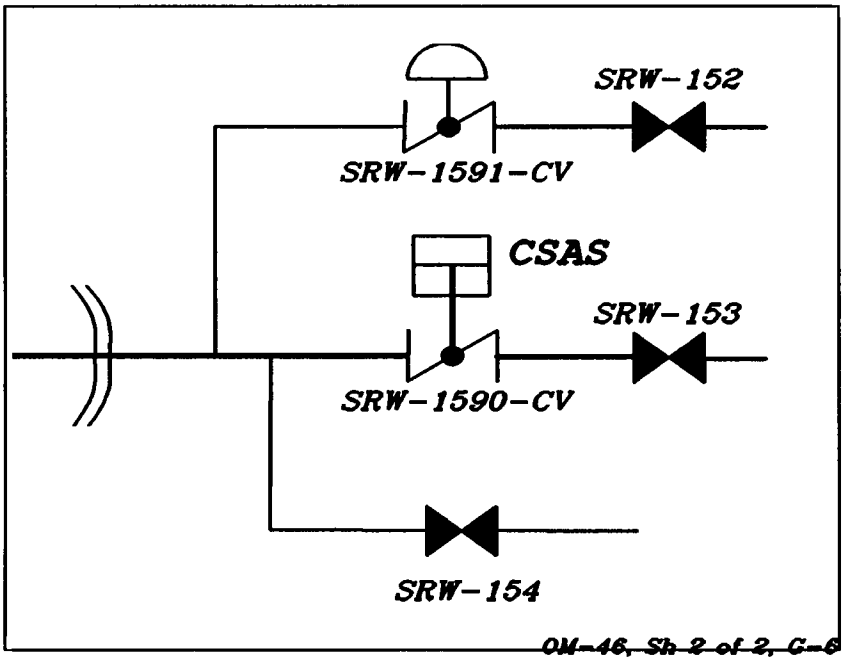

OUTSIDE CONTAINMENT ALIGNMENT

VALVE	POSITION	LOCATION	INITIALS
1-SRW-154	LOCKED SHUT	27' EAST PENET ROOM, S OF CNTMT PURGE SUPPLY	
1-SRW-152	SHUT (1)	27' EAST PENET ROOM, S OF CNTMT PURGE SUPPLY	
1-SRW-153	SHUT (1)	27' EAST PENET ROOM, S OF CNTMT PURGE SUPPLY	
1-SRW-1591-CV	INSTALLED	27' EAST PENET ROOM, S OF CNTMT PURGE SUPPLY	
1-SRW-1590-CV	INSTALLED	27' EAST PENET ROOM, S OF CNTMT PURGE SUPPLY	

(1) **IF NOT** controlled by NO-1-112,
THEN LOG in the Locked Valve Deviation Log

6.1 MECHANICAL PENETRATION CHECKS (Continued)

PENETRATION 29 13 CONTAINMENT COOLER SRW RETURN (continued)

OR

SRW is in service with flow through this penetration	

INSIDE CONTAINMENT ALIGNMENT

- - - - - - -	- - - - - - - - -	NONE - - - - - - - - - - - - -	- - - -

6.1 MECHANICAL PENETRATION CHECKS (Continued)

PENETRATION 25 11 CONTAINMENT COOLER SRW SUPPLY

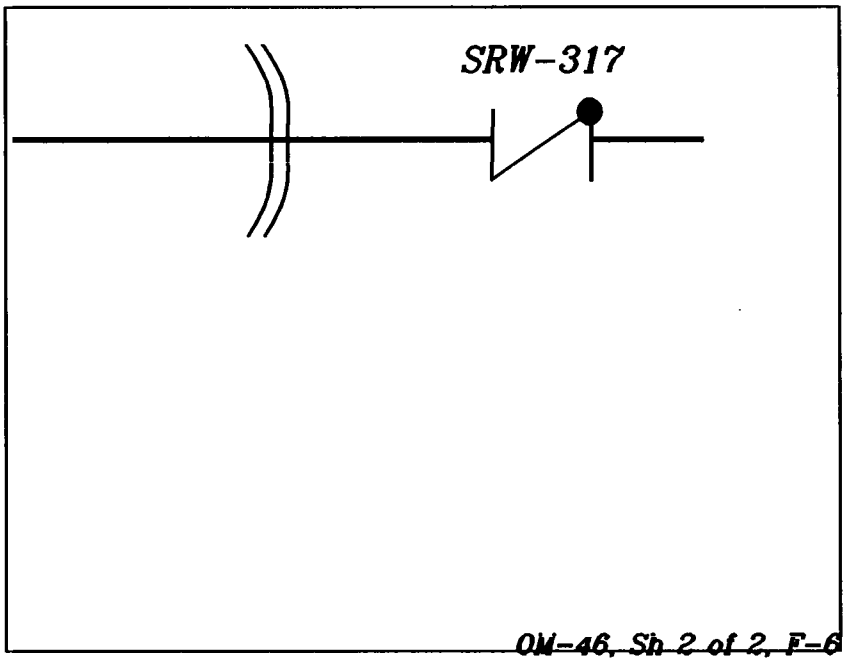

NOTE
Outside Containment Alignment is preferred to provide operational flexibility.

OUTSIDE CONTAINMENT ALIGNMENT

VALVE	POSITION	LOCATION	INITIALS
1-SRW-317	INSTALLED	5' EAST PENET ROOM, E WALL	

OR

SRW is in service with flow through this penetration.	

INSIDE CONTAINMENT ALIGNMENT

- - - - - - -	- - - - - - - - -	NONE - - - - - - - - - - - - -	- - - -

6.1 MECHANICAL PENETRATION CHECKS (Continued)

PENETRATION 13 CONTAINMENT PURGE SUPPLY

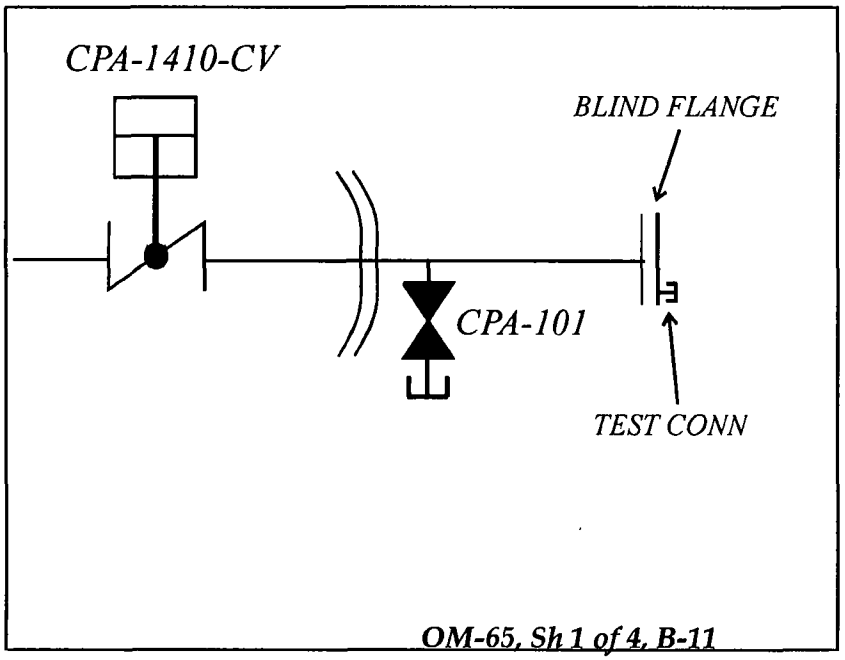

CONTAINMENT ALIGNMENT

VALVE	POSITION	LOCATION	INITIALS
1-CPA-1410-CV	SHUT/OPEN*	1C10	

* 1-CPA-1410-CV may be open during movement of irradiated fuel assemblies within containment, IF CRS A is operable, OR IF NO-1-114 controls are in place, AND capable of being shut. (Circle position PER TS 3.9.3 OR NO-1-114)

6.1 MECHANICAL PENETRATION CHECKS (Continued)

PENETRATION 13 CONTAINMENT PURGE SUPPLY (continued)

OR

VALVE	POSITION	LOCATION	INITIALS
1-CPA-101	LOCKED SHUT	27' EAST PENET ROOM, 36' LEVEL, ABOVE LADDER TO THE 5'	
BLIND FLANGE	INSTALLED*	27' EAST PENET ROOM, N END	
FLANGE TEST CONNECTION	CAPPED	27' EAST PENET ROOM, N END	

* Every other bolt may be removed.

6.1 MECHANICAL PENETRATION CHECKS (Continued)

PENETRATION 30 11 CONTAINMENT COOLER SRW RETURN

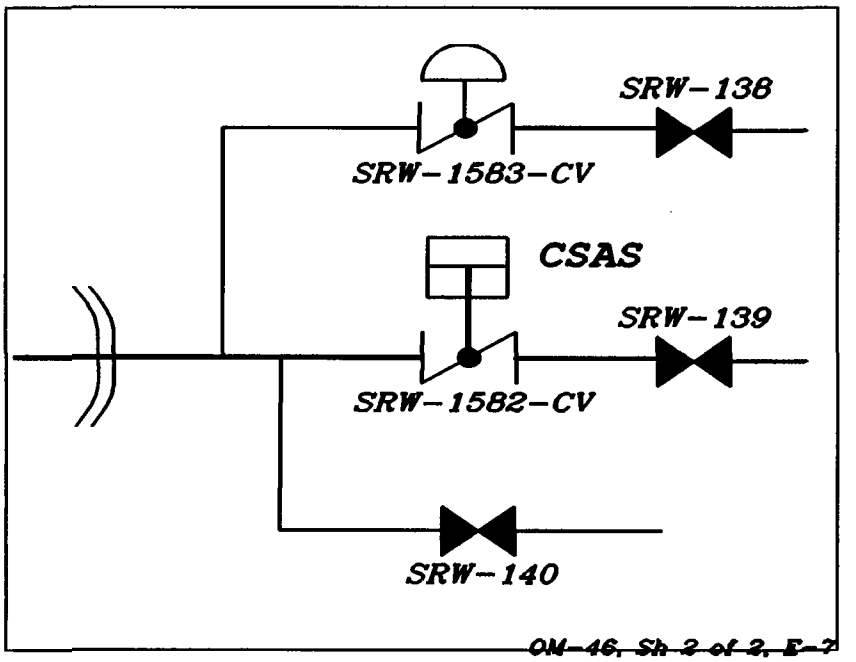

OUTSIDE CONTAINMENT ALIGNMENT

VALVE	POSITION	LOCATION	INITIALS
1-SRW-140	LOCKED SHUT	27' EAST PENET ROOM, BY AFW CVs	
1-SRW-138	SHUT (1)	27' EAST PENET ROOM	
1-SRW-139	SHUT (1)	27' EAST PENET ROOM	
1-SRW-1583-CV	INSTALLED	27' EAST PENET ROOM	
1-SRW-1582-CV	INSTALLED	27' EAST PENET ROOM	

(1) IF NOT controlled by NO-1-112,
THEN LOG in the Locked Valve Deviation Log

OR

SRW is in service with flow through this penetration.	

6.1 MECHANICAL PENETRATION CHECKS (Continued)

PENETRATION 30 11 CONTAINMENT COOLER SRW RETURN (continued)

INSIDE CONTAINMENT ALIGNMENT

- - - - - - -	- - - - - - - - -	NONE - - - - - - - - - - - - -	- - - - -

6.1 MECHANICAL PENETRATION CHECKS (Continued)

PENETRATION 8 NORMAL CONTAINMENT SUMP OUTLET

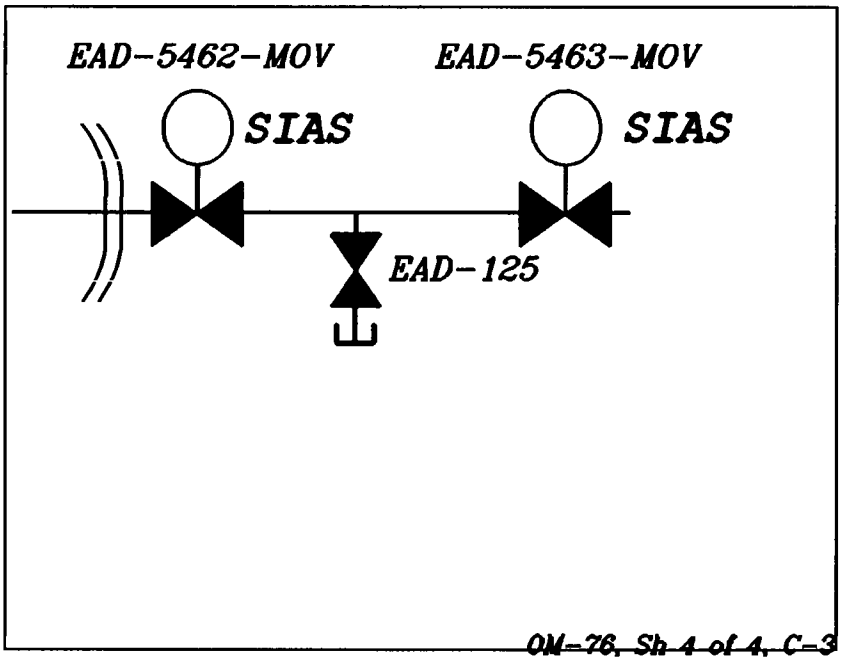

OUTSIDE CONTAINMENT ALIGNMENT

VALVE	POSITION	LOCATION	INITIALS
1-EAD-5463-MOV	SHUT (1)	1C10	
1-EAD-125	LOCKED SHUT	5' AUX BLDG, UNDER DECKING TO PIPE CHASE	

OR

1-EAD-5462-MOV	SHUT (1)	1C10	

(1) Sump valve may be administratively opened PER NO-1-114.

INSIDE CONTAINMENT ALIGNMENT

- - - - - - -	- - - - - - - - -	NONE - - - - - - - - - - - - -	- - - -

6.1 MECHANICAL PENETRATION CHECKS (Continued)

PENETRATION 12 EAST CONTAINMENT EMERGENCY SUMP OUTLET

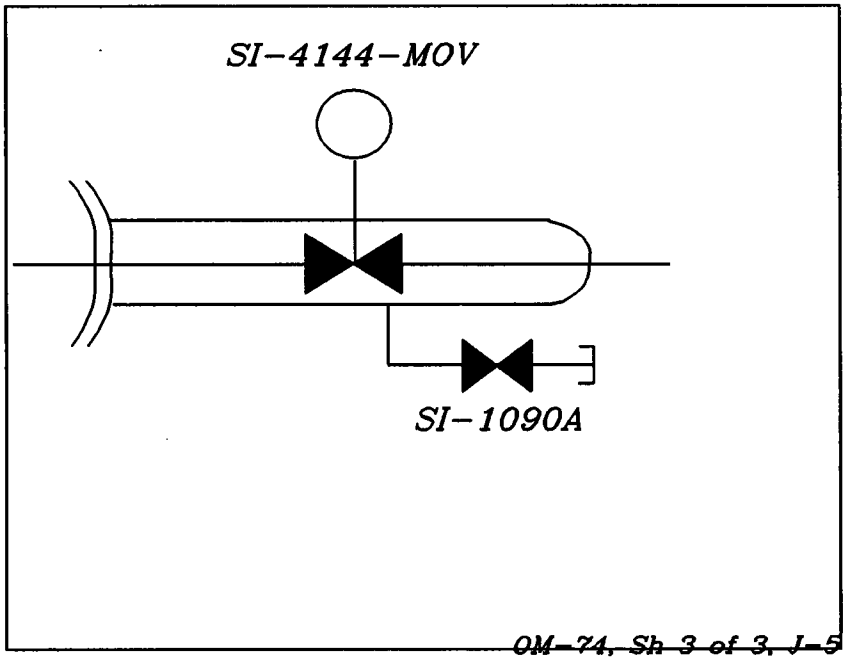

OUTSIDE CONTAINMENT ALIGNMENT

VALVE	POSITION	LOCATION	INITIALS
1-SI-4144-MOV	SHUT	1C08	

INSIDE CONTAINMENT ALIGNMENT

- - - - - - -	- - - - - - - - -	NONE - - - - - - - - - - - - -	- - - -

6.1 MECHANICAL PENETRATION CHECKS (Continued)

PENETRATION 11 WEST CONTAINMENT EMERGENCY SUMP OUTLET

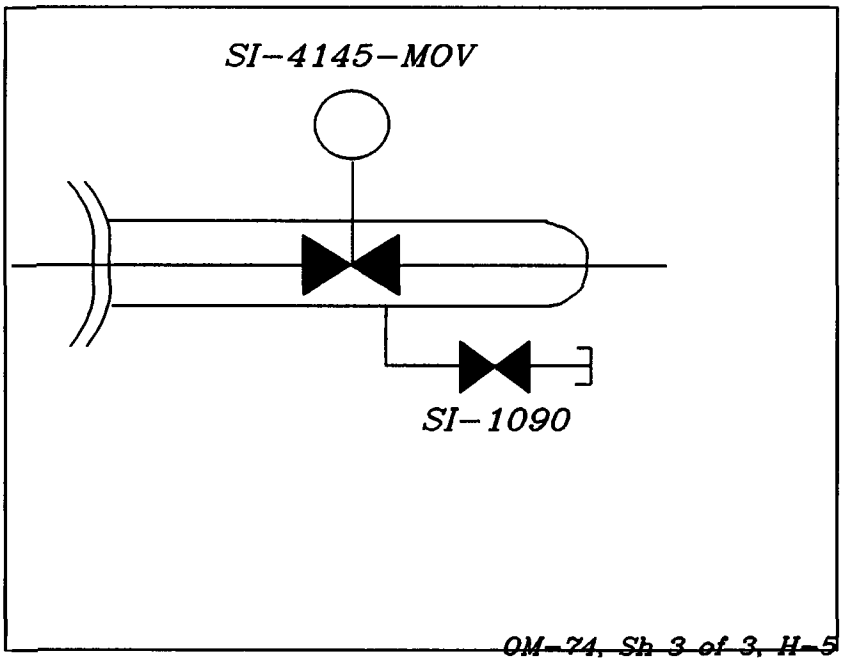

OUTSIDE CONTAINMENT ALIGNMENT

VALVE	POSITION	LOCATION	INITIALS
1-SI-4145-MOV	SHUT	1C09	

INSIDE CONTAINMENT ALIGNMENT

- - - - - - -	- - - - - - - - -	NONE - - - - - - - - - - - - -	- - - -

6.1 MECHANICAL PENETRATION CHECKS (Continued)

PENETRATION 72 CONTAINMENT PRESSURE

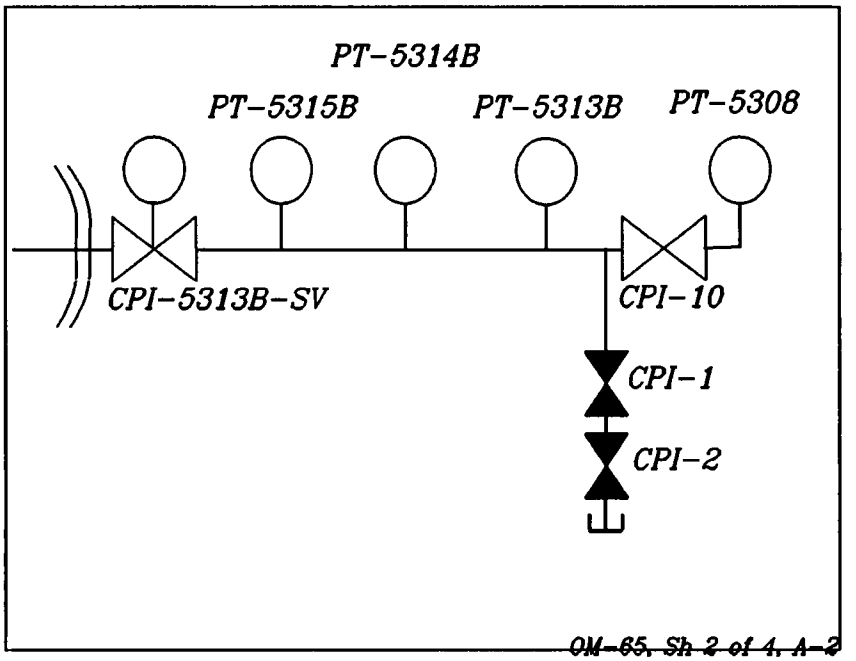

OUTSIDE CONTAINMENT ALIGNMENT

VALVE	POSITION	LOCATION	INITIALS
1-CPI-2	LOCKED SHUT	45' EAST ELEC PENET, W WALL	
1-CPI-1	LOCKED SHUT	45' EAST ELEC PENET, W WALL	
1-PT-5313B	PT **AND** TEST CONN CAP INSTALLED	45' EAST ELEC PENET, N WALL	
1-PT-5314B	PT **AND** TEST CONN CAP INSTALLED	45' EAST ELEC PENET, N WALL	
1-PT-5315B	PT **AND** TEST CONN CAP INSTALLED	45' EAST ELEC PENET, N WALL	
1-PT-5308	PT **AND** TEST CONN CAP INSTALLED	45' EAST ELEC PENET, N WALL	

6.1 MECHANICAL PENETRATION CHECKS (Continued)

PENETRATION 72 CONTAINMENT PRESSURE (continued)

OUTSIDE CONTAINMENT ALIGNMENT
(continued)

OR

VALVE	POSITION	LOCATION	INITIALS
1-CPI-5313B-SV	SHUT (1)	1C10	

(1) IF NOT controlled by NO-1-112,
THEN LOG in the Locked Valve Deviation Log

INSIDE CONTAINMENT ALIGNMENT

- - - - - - -	- - - - - - - - -	NONE - - - - - - - - - - - - -	- - - -

6.1 MECHANICAL PENETRATION CHECKS (Continued)

PENETRATION 84 ILRT VENT

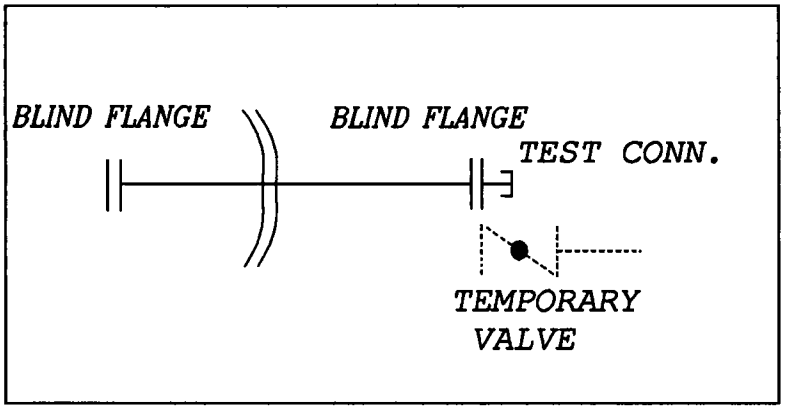

OUTSIDE CONTAINMENT ALIGNMENT

VALVE	POSITION	LOCATION	INITIALS
BLIND FLANGE	INSTALLED	45' EAST ELEC PENET, W WALL	
TEST CONN.	CAPPED	45' EAST ELEC PENET, W WALL	

OR

TEMPORARY VALVE	INSTALLED AND SHUT	45' EAST ELEC PENET, W WALL	

INSIDE CONTAINMENT ALIGNMENT

BLIND FLANGE	INSTALLED	45' EAST WALL	

6.1 MECHANICAL PENETRATION CHECKS (Continued)

PENETRATION 77 CONTAINMENT PRESSURE

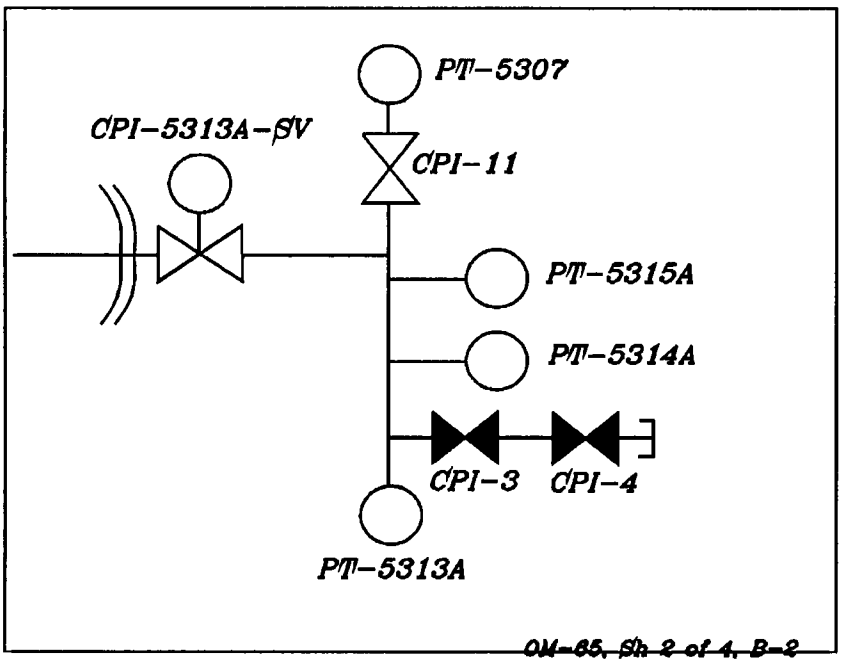

OUTSIDE CONTAINMENT ALIGNMENT

VALVE	POSITION	LOCATION	INITIALS
1-CPI-4	LOCKED SHUT	45' EAST ELEC PENET, N WALL	
1-CPI-3	LOCKED SHUT	45' EAST ELEC PENET, N WALL	
1-PT-5313A	PT **AND** TEST CONN CAP INSTALLED	45' EAST ELEC PENET, N WALL	
1-PT-5314A	PT **AND** TEST CONN CAP INSTALLED	45' EAST ELEC PENET, N WALL	
1-PT-5315A	PT **AND** TEST CONN CAP INSTALLED	45' EAST ELEC PENET, N WALL	
1-PT-5307	PT **AND** TEST CONN CAP INSTALLED	45' EAST ELEC PENET, N WALL	

6.1 MECHANICAL PENETRATION CHECKS (Continued)

PENETRATION 77 CONTAINMENT PRESSURE (continued)

OUTSIDE CONTAINMENT ALIGNMENT
(continued)

OR

VALVE	POSITION	LOCATION	INITIALS
1-CPI-5313A-SV	SHUT (1)	1C10	

(1) **IF NOT** controlled by NO-1-112,
THEN LOG in the Locked Valve Deviation Log

INSIDE CONTAINMENT ALIGNMENT

- - - - - - -	- - - - - - - - -	NONE - - - - - - - - - - - - -	- - - -

6.1 MECHANICAL PENETRATION CHECKS (Continued)

PENETRATION 78 CONTAINMENT PRESSURE

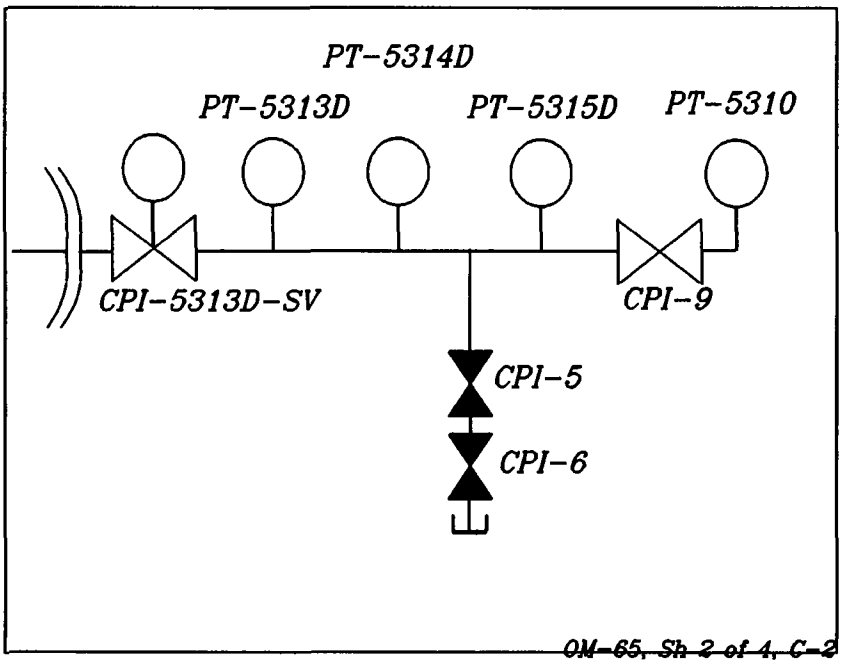

OUTSIDE CONTAINMENT ALIGNMENT

VALVE	POSITION	LOCATION	INITIALS
1-CPI-6	LOCKED SHUT	45' WEST ELEC PENET, W WALL	
1-CPI-5	LOCKED SHUT	45' WEST ELEC PENET, W WALL	
1-PT-5313D	PT **AND** TEST CONN CAP INSTALLED	45' WEST ELEC PENET, W WALL	
1-PT-5314D	PT **AND** TEST CONN CAP INSTALLED	45' WEST ELEC PENET, W WALL	
1-PT-5315D	PT **AND** TEST CONN CAP INSTALLED	45' WEST ELEC PENET, W WALL	
1-PT-5310	PT **AND** TEST CONN CAP INSTALLED	45' WEST ELEC PENET, W WALL	

6.1 MECHANICAL PENETRATION CHECKS (Continued)

PENETRATION 78 CONTAINMENT PRESSURE (continued)

OUTSIDE CONTAINMENT ALIGNMENT
(continued)

OR

VALVE	POSITION	LOCATION	INITIALS
1-CPI-5313D-SV	SHUT (1)	1C10	

(1) **IF NOT** controlled by NO-1-112,
THEN LOG in the Locked Valve Deviation Log

INSIDE CONTAINMENT ALIGNMENT

- - - - - - -	- - - - - - - - -	NONE - - - - - - - - - - - - -	- - - -

6.1 MECHANICAL PENETRATION CHECKS (Continued)

PENETRATION 83 CONTAINMENT PRESSURE

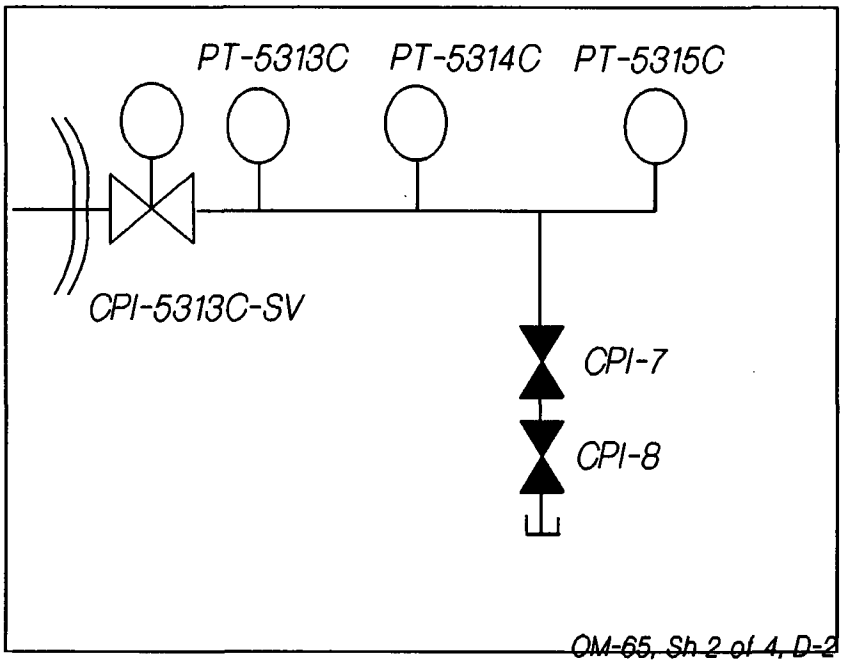

OUTSIDE CONTAINMENT ALIGNMENT

VALVE	POSITION	LOCATION	INITIALS
1-CPI-8	LOCKED SHUT	45' WEST ELEC PENET, N WALL	
1-CPI-7	LOCKED SHUT	45' WEST ELEC PENET, N WALL	
1-PT-5313C	PT **AND** TEST CONN CAP INSTALLED	45' WEST ELEC PENET, N WALL	
1-PT-5314C	PT **AND** TEST CONN CAP INSTALLED	45' WEST ELEC PENET, N WALL	
1-PT-5315C	PT **AND** TEST CONN CAP INSTALLED	45' WEST ELEC PENET, N WALL	

6.1 MECHANICAL PENETRATION CHECKS (Continued)

PENETRATION 83 CONTAINMENT PRESSURE (continued)

OUTSIDE CONTAINMENT ALIGNMENT
(continued)

OR

VALVE	POSITION	LOCATION	INITIALS
1-CPI-5313C-SV	SHUT (1)	1C10	

(1) IF NOT controlled by NO-1-112,
THEN LOG in the Locked Valve Deviation Log

INSIDE CONTAINMENT ALIGNMENT

- - - - - - -	- - - - - - - - -	NONE - - - - - - - - - - - - -	- - - -

6.1 MECHANICAL PENETRATION CHECKS (Continued)

PENETRATION 42 FUEL TRANSFER TUBE

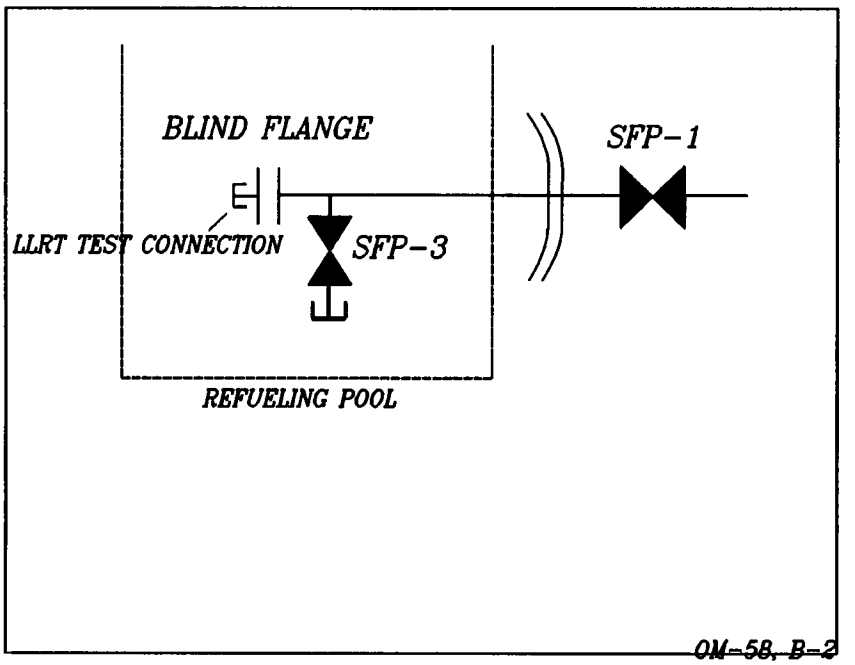

OUTSIDE CONTAINMENT ALIGNMENT

VALVE	POSITION	LOCATION	INITIALS
0-SFP-1	LOCKED SHUT	69' AUX BLDG, N END OF SFP	

INSIDE CONTAINMENT ALIGNMENT

NOTE
A separate SWP is required to enter the RFP.

0-SFP-3	LOCKED SHUT	S END OF REFUELING POOL	
BLIND FLANGE	INSTALLED	S END OF REFUELING POOL	
LLRT TEST CONNECTION	CAPPED	S END OF REFUELING POOL	

6.1 MECHANICAL PENETRATION CHECKS (Continued)

PENETRATION 42 FUEL TRANSFER TUBE (continued)

OR

Refueling pool water level is greater than or equal to 23 ft above the top of irradiated fuel assemblies seated in the reactor vessel.	

6.1 MECHANICAL PENETRATION CHECKS (Continued)

CONTAINMENT EQUIPMENT HATCH

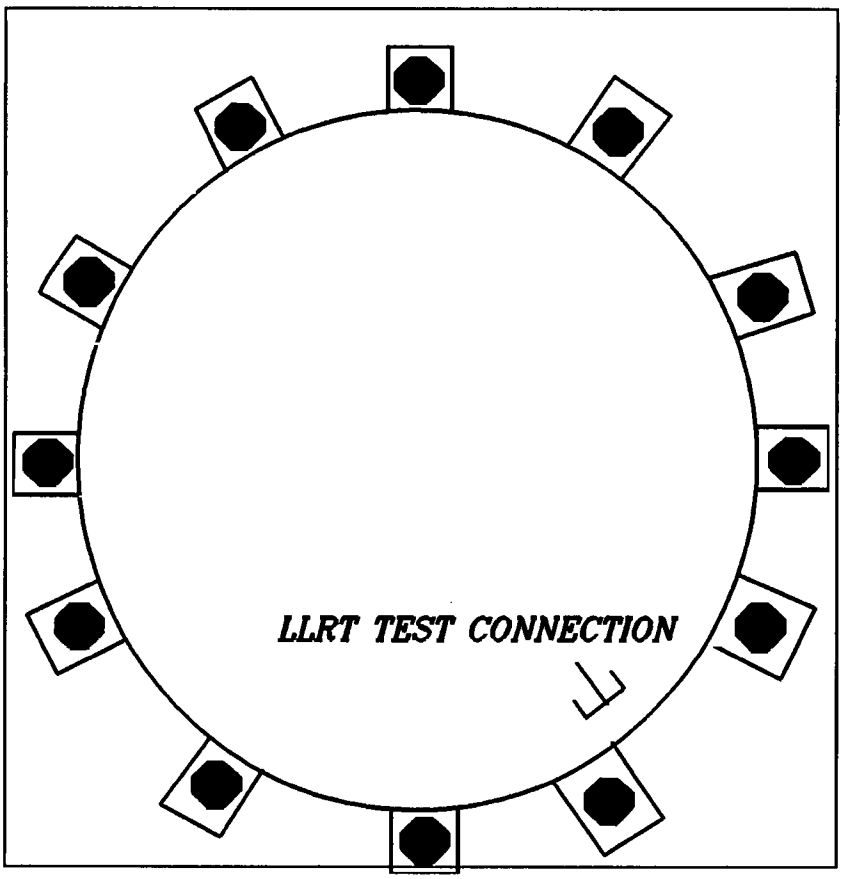

The Equipment Hatch may be used to meet Closure requirements for all conditions. The Containment Outage Door may be used in lieu of the Equipment Hatch for Closure requirements when allowed by NO-1-114.

6.1 MECHANICAL PENETRATION CHECKS (Continued)

CONTAINMENT EQUIPMENT HATCH (continued)

INSIDE CONTAINMENT ALIGNMENT

VALVE	POSITION	LOCATION	INITIALS
LLRT TEST CONNECTION	CAPPED	EQUIP HATCH	
HATCH IN PLACE	A MINIMUM OF 4 EVENLY SPACED BOLTS FOR CNTMT CLOSURE (CONTAINMENT DEVIATION NOT ALLOWED DURING REFUELING, OR NO SDC LOOP OPERABLE OR IN OPERATION) (1) [B0332]		

(1) Due to pressure concerns associated with the enclosed space, when the Containment Outage Door is closed and the Containment Equipment Hatch is installed, Equalizing Valve, 1-CPI-1002 is required to be open **PER** DOOR-1, OPENING AND CLOSING OF CONTAINMENT OUTAGE DOOR or HE-46, EQUIPMENT ACCESS DOOR REMOVAL AND INSTALLATION. The Containment Outage Door can **NOT** be used for Closure requirements if Equalizing Valve, 1-CPI-1002 is open.

6.1 MECHANICAL PENETRATION CHECKS (Continued)

CONTAINMENT OUTAGE DOOR

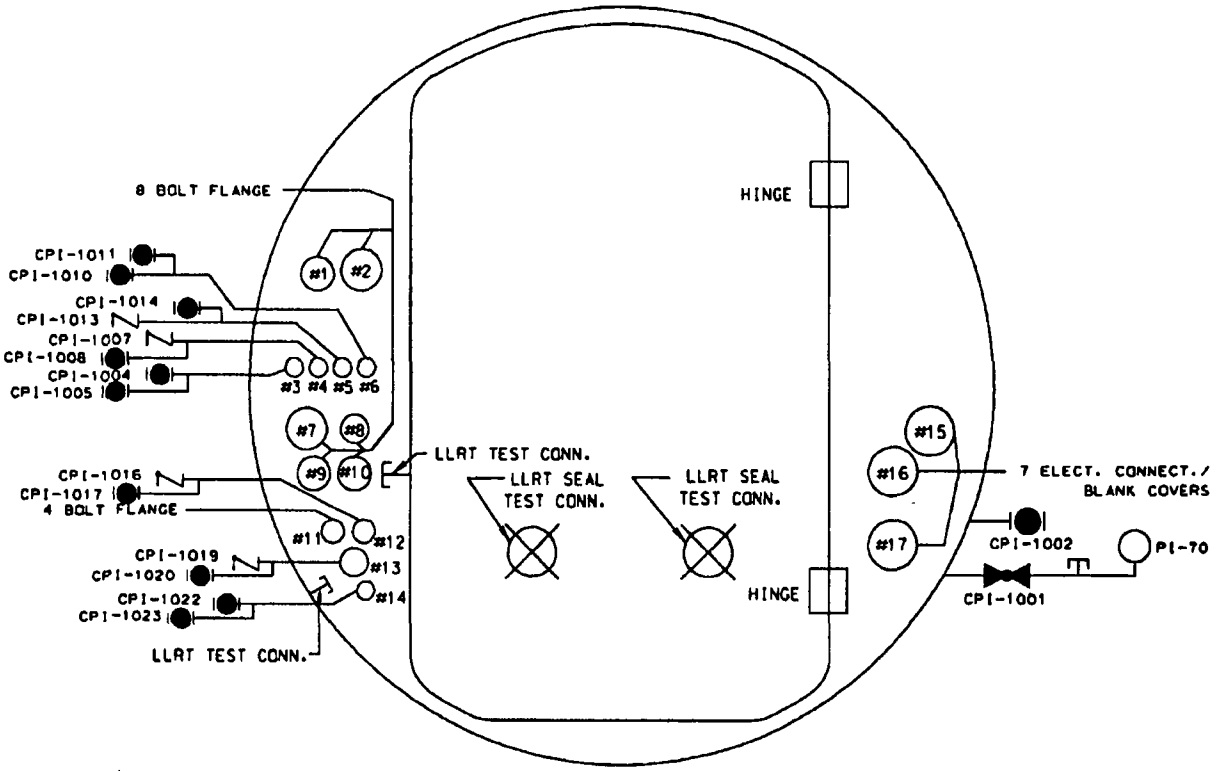

CONTAINMENT OUTAGE DOOR

(View is from Butler Building side.)

The Containment Outage Door (COD) can **NOT** be used for ANY closure requirements during Severe Weather conditions.

6.1 MECHANICAL PENETRATION CHECKS (Continued)

CONTAINMENT OUTAGE DOOR (continued)

CAUTION
Butler Building side Blank Flanges can **NOT** be used to meet closure requirements.

a. CONTAINMENT OUTAGE DOOR ALIGNMENT

VALVE	POSITION	LOCATION	INITIALS
PENETRATION #1	BLANK FLANGE INSTALLED	CNTMT SIDE ON COD FRAME	
PENETRATION #2	BLANK FLANGE INSTALLED	CNTMT SIDE ON COD FRAME	
PENETRATION #7	BLANK FLANGE INSTALLED	CNTMT SIDE ON COD FRAME	
PENETRATION #8	BLANK FLANGE INSTALLED	CNTMT SIDE ON COD FRAME	
PENETRATION #9	BLANK FLANGE INSTALLED	CNTMT SIDE ON COD FRAME	
PENETRATION #10	BLANK FLANGE INSTALLED	CNTMT SIDE ON COD FRAME	
PENETRATION #11	BLANK FLANGE INSTALLED	CNTMT SIDE ON COD FRAME	
PENETRATION #15 ELECT. CONNECT. /BLANK COVERS 7 TOTAL (Circle method used)	INSTALLED	CNTMT SIDE ON COD FRAME	

6.1 MECHANICAL PENETRATION CHECKS (Continued)

CONTAINMENT OUTAGE DOOR (continued)

VALVE	POSITION	LOCATION	INITIALS
PENETRATION #16 ELECT. CONNECT. /BLANK COVERS 7 TOTAL (Circle method used)	INSTALLED	CNTMT SIDE ON COD FRAME	
PENETRATION #17 ELECT. CONNECT. /BLANK COVERS 7 TOTAL (Circle method used)	INSTALLED	CNTMT SIDE ON COD FRAME	
CNTMT SIDE LLRT TEST CONNECTION	CAPPED	CNTMT SIDE COD ON TRANSITION RING NEAR PENETRATION #13	
DOOR OPERATOR LLRT TEST CONNECTION FITTING 2 TOTAL	INSTALLED	CNTMT SIDE ON OPERATOR SHAFT ONE FITTING ON EACH OPERATOR	
CNTMT SIDE DOOR OPERATORS 2 TOTAL	INSTALLED	CNTMT SIDE MAIN DOORWAY	

6.1 MECHANICAL PENETRATION CHECKS (Continued)

CONTAINMENT OUTAGE DOOR (continued)

VALVE	POSITION	LOCATION	INITIALS
BUT. BLDG SIDE DOOR OPERATORS 2 TOTAL	INSTALLED	BUT. BLDG SIDE MAIN DOORWAY	
BUT. BLDG SIDE LLRT TEST CONNECTION	CAPPED	BUT. BLDG SIDE COD ON DOOR FRAME NEAR PENETRATION #10	
1-CPI-1001 GAUGE ISOLATION	SHUT	BUT. BLDG SIDE COD ON TRANS. RING NEAR PENETRATION #17	
1-CPI-1002 EQUALIZING VLV	SHUT (1)	BUT. BLDG SIDE COD ON TRANS. RING NEAR PENETRATION #16	

(1) Due to pressure concerns associated with the enclosed space, when the Containment Outage Door is closed and the Containment Equipment Hatch is installed, Equalizing Valve, 1-CPI-1002 is required to be open **PER** DOOR-1, OPENING AND CLOSING OF CONTAINMENT OUTAGE DOOR or HE-46, EQUIPMENT ACCESS DOOR REMOVAL AND INSTALLATION. The Containment Outage Door can **NOT** be used for Closure requirements if Equalizing Valve, 1-CPI-1002 is open.

6.1 MECHANICAL PENETRATION CHECKS (Continued)

CONTAINMENT OUTAGE DOOR (continued)

NOTE
The previous block verification steps are always completed in conjunction with **EITHER** step below.

CAUTION
IF the Containment Outage Door is being verified to comply with no SDC Loop operable or in operation **PER** TS ACTIONS 3.9.4.A **OR** 3.9.5.B,
THEN the Containment Outage Door **SHALL** be shut. Verification **CANNOT** be N/A'd.

- Containment Outage Door is FULLY DOGGED SHUT.
  (N/A if performing step below for Refueling Containment Closure) _____

OR

- During Refueling Containment Closure the Containment Outage Door may remain OPEN **IF** the following is verified:
  (N/A if the Containment Outage Door **IS** shut **PER** step above)

  (1) The Containment Outage Door is OPERABLE as demonstrated by: _____

NOTE
Floor grating may be installed if administrative controls are in place to enable the removal of the grating and fully dogging shut the Containment Outage Door in less than 30 minutes.

- the door is unblocked
- no hoses or cables are run through the door
- capable of being fully dogged shut

(2) There is greater than 23 feet of water above the fuel,

_____ (greater than 56.7 ft)
RFP LEVEL _____

(3) A designated individual is continuously stationed immediately outside the Containment Outage Door to shut and fully dog the door. _____

6.1 MECHANICAL PENETRATION CHECKS (Continued)

CONTAINMENT OUTAGE DOOR (continued)

b. CONTAINMENT OUTAGE DOOR PENETRATION ALIGNMENTS

COD PENETRATION #3 SLUICE RIG

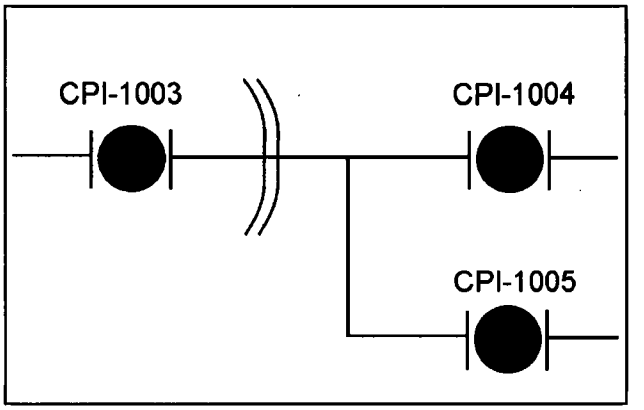

VALVE	POSITION	LOCATION	INITIALS
1-CPI-1004	LOCKED SHUT	BUTLER BLDG. SIDE COD FRAME	
1-CPI-1005	LOCKED SHUT	BUTLER BLDG. SIDE COD FRAME	

OR

1-CPI-1003	LOCKED SHUT	CNTMT SIDE COD FRAME	

OR

NOTE
SG Sluice hoses connected between a COD penetration and a SG with inside closure may be considered a closed system (i.e., SG aligned per Attach 3 or Attach 4).

System installed as a closed system.	

6.1 MECHANICAL PENETRATION CHECKS (Continued)

CONTAINMENT OUTAGE DOOR (continued)

COD PENETRATION #4 AIR SERVICE

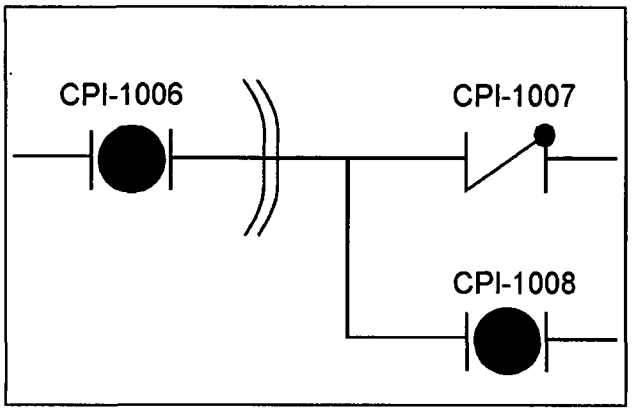

VALVE	POSITION	LOCATION	INITIALS
1-CPI-1007	INSTALLED	BUTLER BLDG. SIDE COD FRAME	
1-CPI-1008	LOCKED SHUT	BUTLER BLDG. SIDE COD FRAME	

OR

1-CPI-1006	LOCKED SHUT	CNTMT SIDE COD FRAME	

6.1 MECHANICAL PENETRATION CHECKS (Continued)

CONTAINMENT OUTAGE DOOR (continued)

COD PENETRATION #5 WATER SERVICE

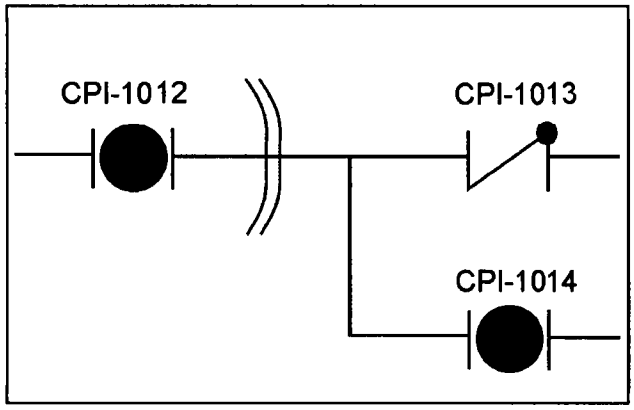

VALVE	POSITION	LOCATION	INITIALS
1-CPI-1013	INSTALLED	BUTLER BLDG. SIDE COD FRAME	
1-CPI-1014	LOCKED SHUT	BUTLER BLDG. SIDE COD FRAME	

OR

1-CPI-1012	LOCKED SHUT	CNTMT SIDE COD FRAME	

6.1 MECHANICAL PENETRATION CHECKS (Continued)

CONTAINMENT OUTAGE DOOR (continued)

COD PENETRATION #6 SLUDGE LANCING RETURN

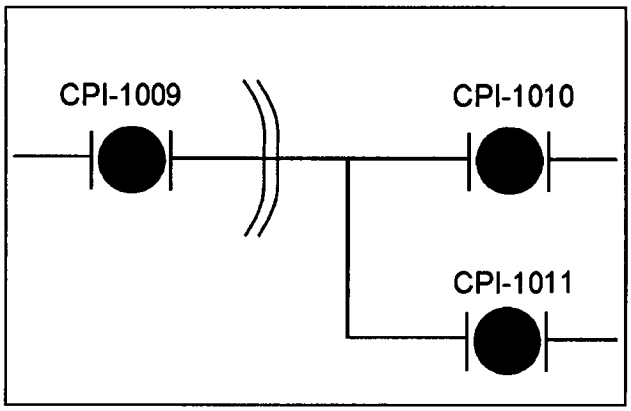

VALVE	POSITION	LOCATION	INITIALS
1-CPI-1010	LOCKED SHUT	BUTLER BLDG. SIDE COD FRAME	
1-CPI-1011	LOCKED SHUT	BUTLER BLDG. SIDE COD FRAME	

OR

1-CPI-1009	LOCKED SHUT	CNTMT SIDE COD FRAME	

OR

Sludge Lancing Return installed as a closed system.	

6.1 MECHANICAL PENETRATION CHECKS (Continued)

CONTAINMENT OUTAGE DOOR (continued)

COD PENETRATION #12 Miscellaneous Supply

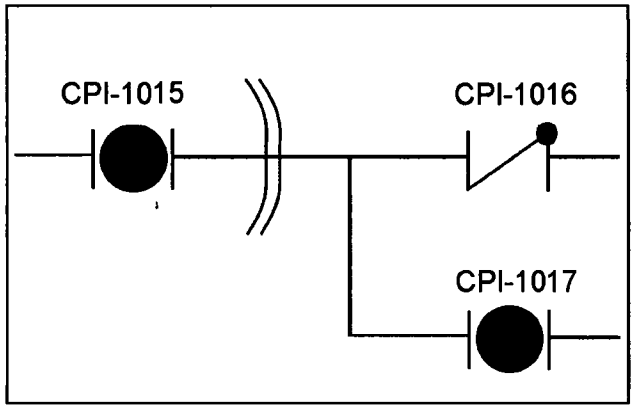

VALVE	POSITION	LOCATION	INITIALS
1-CPI-1016	INSTALLED	BUTLER BLDG. SIDE COD FRAME	
1-CPI-1017	LOCKED SHUT	BUTLER BLDG. SIDE COD FRAME	

OR

1-CPI-1015	LOCKED SHUT	CNTMT SIDE COD FRAME	

6.1 MECHANICAL PENETRATION CHECKS (Continued)

CONTAINMENT OUTAGE DOOR (continued)

COD PENETRATION #13 SLUDGE LANCING SUPPLY

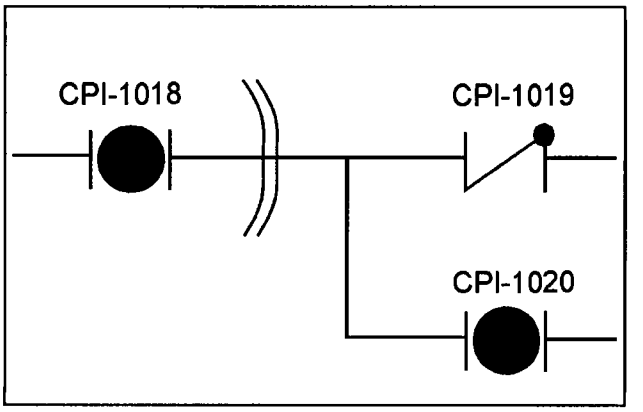

VALVE	POSITION	LOCATION	INITIALS
1-CPI-1019	INSTALLED	BUTLER BLDG. SIDE COD FRAME	
1-CPI-1020	LOCKED SHUT	BUTLER BLDG. SIDE COD FRAME	

OR

1-CPI-1018	LOCKED SHUT	CNTMT SIDE COD FRAME	

6.1 MECHANICAL PENETRATION CHECKS (Continued)

CONTAINMENT OUTAGE DOOR (continued)

COD PENETRATION #14 MISCELLANEOUS

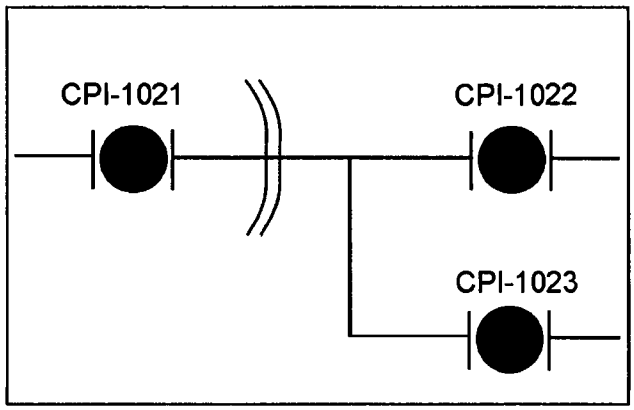

VALVE	POSITION	LOCATION	INITIALS
1-CPI-1022	LOCKED SHUT	BUTLER BLDG. SIDE COD FRAME	
1-CPI-1023	LOCKED SHUT	BUTLER BLDG. SIDE COD FRAME	

OR

1-CPI-1021	LOCKED SHUT	CNTMT SIDE COD FRAME	

OR

NOTE
SG Sluice hoses connected between a COD penetration and a SG with inside closure may be considered a closed system (i.e., SG aligned per Attach 3 or Attach 4).

System installed as a closed system.	

6.1 MECHANICAL PENETRATION CHECKS (Continued)

69' CONTAINMENT PERSONNEL AIRLOCK

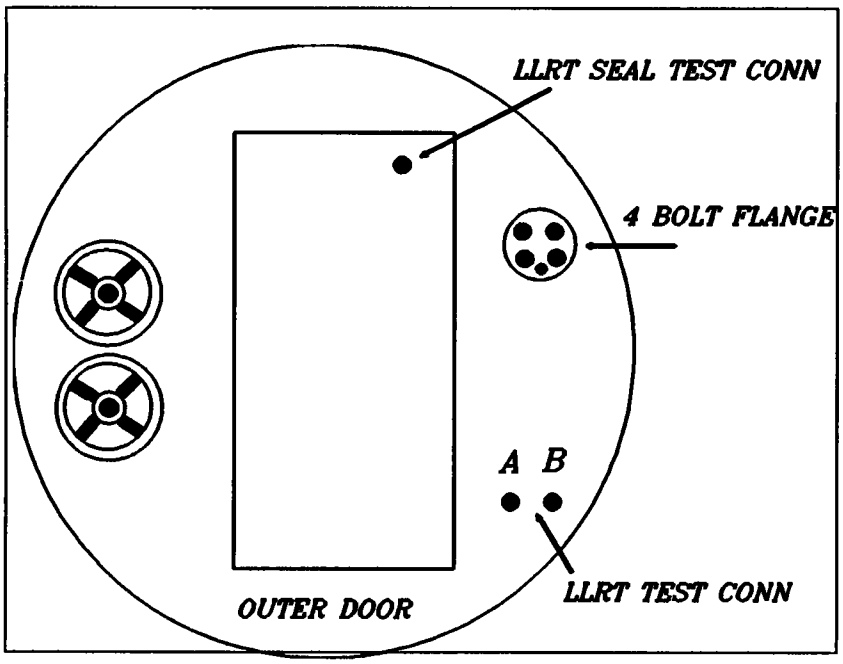

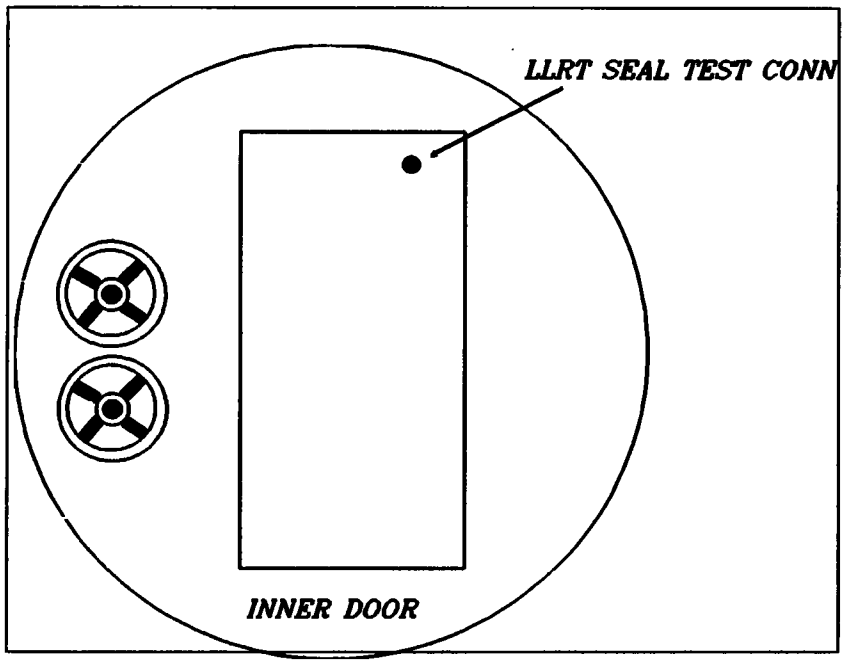

6.1 MECHANICAL PENETRATION CHECKS (Continued)

69' CONTAINMENT PERSONNEL AIRLOCK (continued)

OUTSIDE CONTAINMENT ALIGNMENT

03606

VALVE	POSITION	LOCATION	INITIALS
OUTER DOOR LLRT TEST CONNECTION A	CAPPED		
OUTER DOOR LLRT TEST CONNECTION B	CAPPED		
FOUR BOLT FLANGE	INSTALLED WITH PLUG INSTALLED		

NOTE

The previous block verification steps are always completed in conjunction with step a. **OR** step b. below.

CAUTION

IF the Personnel Airlock is being verified to comply with no SDC Loop operable **OR** in operation **PER** TS ACTIONS 3.9.4.A **OR** 3.9.5.B,
THEN at least one door **SHALL** be shut. Verification **CANNOT** be N/A'd.

a. At least one door (and its equalizing valve) is SHUT.
(N/A if performing step b., below, for Refueling Containment Closure) _____

OR

6.1 MECHANICAL PENETRATION CHECKS (Continued)

69' CONTAINMENT PERSONNEL AIRLOCK (continued)

b. During Refueling Containment Closure both doors may remain OPEN **IF** the following is verified:
(N/A if one door **IS** shut **PER** step a.)

(1) One Personnel Airlock door is OPERABLE as demonstrated by:

- one door (and its equalizing valve) is capable of being closed
- that same door is unblocked
- no hoses or cables are run through the airlock

OUTER/INNER DOOR OPERABLE
(CIRCLE ONE) _____

(2) There is greater than 23 feet of water above the fuel,

_____ (greater than 56.7 ft)
RFP LEVEL _____

(3) A designated individual is continuously stationed immediately outside the airlock to close the door. _____

6.1 MECHANICAL PENETRATION CHECKS (Continued)

CONTAINMENT EMERGENCY AIRLOCK

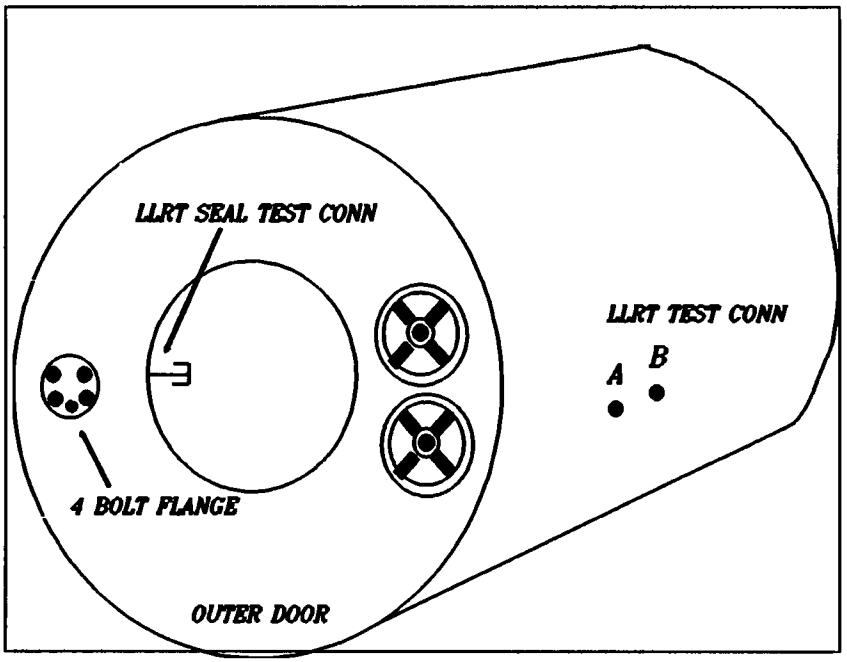

NOTE
To gain OUTSIDE access to the EAL Building for the following verification, keys must be obtained from Security and RADCON.

OUTSIDE CONTAINMENT ALIGNMENT

VALVE	POSITION	LOCATION	INITIALS
OUTER DOOR LLRT SEAL TEST CONNECTION	CAPPED		
LLRT TEST CONNECTION A	CAPPED		
LLRT TEST CONNECTION B	CAPPED		
FOUR BOLT FLANGE	INSTALLED WITH PLUG INSTALLED		

6.1 MECHANICAL PENETRATION CHECKS (Continued)

CONTAINMENT EMERGENCY AIRLOCK (continued)

NOTE

- The Temporary Door requires an NO-1-114 Containment Closure Deviation. **[B0330]**
- Step a **OR** b is ALWAYS completed in conjunction with the previous block verification steps.

CAUTION

IF the Emergency Air Lock is being verified to comply with no SDC Loop operable **OR** in operation **PER** TS ACTIONS 3.9.4.A **OR** 3.9.5.B,
THEN at least one door **SHALL** be shut. Verification **CANNOT** be N/A'd.

a. The outside Emergency Air Lock door **AND** its equalizing valve are SHUT. (N/A if performing EAL Temporary Door checks) _____

OR

b. **IF** the Temporary Door is to be credited for Containment Closure, **THEN VERIFY** the following: (N/A if performing EAL Door checks)

(1) EAL Temporary Door installed **PER** PAL-3, INSTALLATION OF TEMPORARY DOOR ON EMERGENCY PERSONNEL AIRLOCK.

_____
MECHANICAL MAINTENANCE SUPERVISOR

(2) Any penetrations installed **PER** EAL-1, PENETRATION OF TEMPORARY DOOR ON EMERGENCY PERSONNEL AIRLOCK.

_____
MECHANICAL MAINTENANCE SUPERVISOR

6.1 MECHANICAL PENETRATION CHECKS (Continued)

CONTAINMENT EMERGENCY AIRLOCK (continued)

NOTE
When ATTACHMENT 3 **OR** ATTACHMENT 4 is being completed for the SG closed to the CNTMT atmosphere, the SG fill hose connected between the SG Sluice Rig and the Temporary Door in the CNTMT **AND** from the Temporary Door to the DI Water Storage Tank may be considered a closed system, if pressurized.

(3) Each penetration through the door is: _____

- capped

OR

- connected to a closed system

OR

- isolated at the penetration

(4) Outer door equalizing valve is shut. _____

(5) **INSTALL** GREEN CHAIN barriers at the EAL on the inside **AND** outside hatches to prevent unauthorized entry in the area. (N/A if **NOT** in Restricted Containment Closure conditions) _____

- Signs shall be posted stating that OWC permission is required to enter. _____

(6) All manual valves associated with pipe penetrations through the temporary door are tagged **PER** NO-1-114, Section titled, Restricted Containment Closure Conditions.
(N/A if **NOT** in Restricted Containment Closure conditions) _____

INSIDE CONTAINMENT ALIGNMENT

The inside Emergency Air Lock door **AND** its equalizing valve are SHUT.	

6.2 ELECTRICAL PENETRATION CANISTER CHECKS

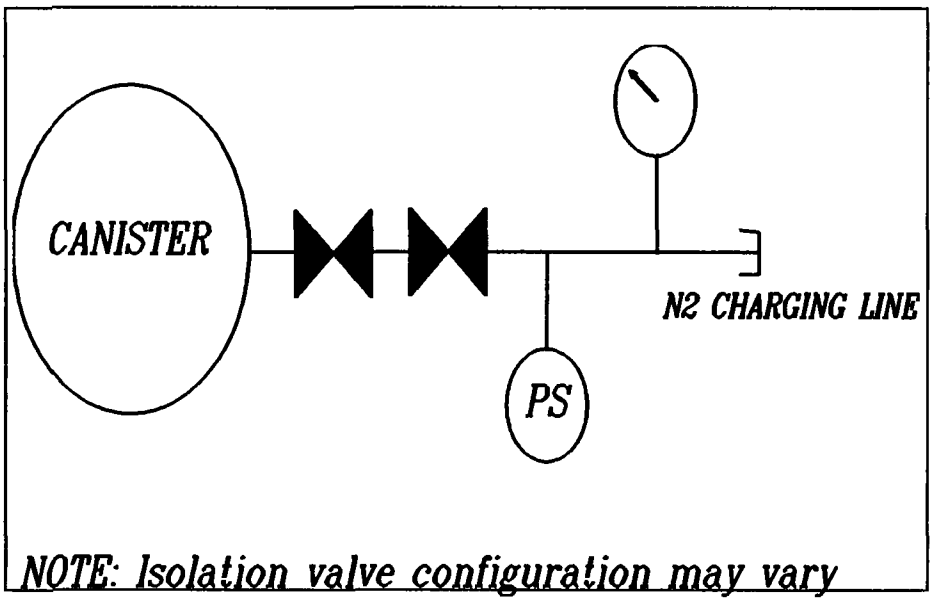

NOTE
Pressurization of an Electrical Penetration Canister is **NOT** required to meet Containment Closure.

a. **VERIFY** the Electrical Penetration Canisters by: **[B0333]**

- CHECKING the canister is pressurized **OR** PRESSURIZING the canister **PER** OI-4.

OR

- VISUALLY VERIFYING the canister is installed, with Engineering support

b. **INDICATE** that the above requirements are satisfied by initialing for each penetration.

6.2 ELECTRICAL PENETRATION CANISTER CHECKS (Continued)

45' West Electrical Penetration Room

CANISTER DESIGNATION	INITIALS	CANISTER DESIGNATION	INITIALS
1ZWA1		1ZWD4	
1ZWA3		1ZWD5	
1ZWA6		1ZWD6	
1ZWA8		1ZWD7	
1ZWB1		1ZWD8	
1ZWB2		1ZWD9	
1ZWB7		1ZWE1	
1ZWB8		1ZWE2	
1ZWC1		1ZWE3	
1ZWC3		1ZWE4	
1ZWC4		1ZWE5	
1ZWC6		1ZWE6	
1ZWC9		1ZWE7	
1ZWD1		1ZWE8	
1ZWD2		1ZWE9	
1ZWD3			

6.2 ELECTRICAL PENETRATION CANISTER CHECKS (Continued)

45' East Electrical Penetration Room

CANISTER DESIGNATION	INITIALS	CANISTER DESIGNATION	INITIALS
1ZEA2		1ZED1	
1ZEA4		1ZED2	
1ZEA5		1ZED3	
1ZEA7		1ZED4	
1ZEA9		1ZED5	
1ZEB1		1ZED6	
1ZEB2		1ZED7	
1ZEB3		1ZED8	
1ZEB4		1ZEE1	
1ZEB5		1ZEE2	
1ZEB6		1ZEE3	
1ZEC1		1ZEE4	
1ZEC2		1ZEE5	
1ZEC4		1ZEE6	
1ZEC6		1ZEE7	
1ZEC7		1ZEE8	
1ZEC9		1ZEE9	

6.3 11 STEAM GENERATOR CHECKS **INITIALS**

INDICATE the current 11 Steam Generator status and isolation requirements: (check one)

_____ SRO

☐ 11 Steam Generator is open to the Containment atmosphere: **PERFORM** ATTACHMENT 1.

☐ 11 Steam Generator is closed to the Containment atmosphere: **PERFORM** ATTACHMENT 3.

6.4 12 STEAM GENERATOR CHECKS

INDICATE the current 12 Steam Generator status and isolation requirements: (check one)

_____ SRO

☐ 12 Steam Generator is open to the Containment atmosphere: **PERFORM** ATTACHMENT 2.

☐ 12 Steam Generator is closed to the Containment atmosphere: **PERFORM** ATTACHMENT 4.

6.5 ACCEPTANCE CRITERIA

INITIALS

NOTE

- Performance of this section constitutes a supervisory review. Actual observation of equipment response by the SRO performing this review is not required. Answering YES to a step signifies the referenced step has been completed and signed off by a qualified operator **other than the SRO reviewer** and the actual equipment response is acceptable and valid.
- **IF** performing this test in Mode 5 or 6 for the non-T.S. Surveillance, verification of Containment Closure status **PER** NO-1-114,
  THEN Steps A through E shall be marked N/A and steps F through H shall be performed instead.
- **IF** solely performing Post Maintenance or Operability Verification,
  THEN Steps A through H shall be marked N/A and Step I shall be performed, otherwise mark Step I N/A.

A. Were all mechanical penetrations in Section 6.1 aligned **OR** controlled by a NO-1-112 tagout or MD-1-100 TEMP ALT, to provide Containment Closure?

YES / NO / N/A (circle one) _____ SRO

B. Were all electrical penetrations aligned to provide Containment Closure in Section 6.2, **OR** controlled by a MD-1-100 TEMP ALT, to provide Containment Closure?

YES / NO / N/A (circle one) _____ SRO

C. Was 11 Steam Generator verified to be in the required configuration, **OR** controlled by a NO-1-112 tagout or MD-1-100 TEMP ALT to provide Containment Closure, as indicated by completion of ATTACHMENT 1 or ATTACHMENT 3?

YES / NO / N/A (circle one) _____ SRO

D. Was 12 Steam Generator verified to be in the required configuration, **OR** controlled by a NO-1-112 tagout or MD-1-100 TEMP ALT to provide Containment Closure, as indicated by completion of ATTACHMENT 2 or ATTACHMENT 4?

YES / NO / N/A (circle one) _____ SRO

6.5 ACCEPTANCE CRITERIA (Continued) **INITIALS**

E. This test is considered satisfactory and Containment Closure is established, if YES was answered in A through D above.

YES / NO / N/A (circle one) _____ SRO

1. **IF** not,
THEN NOTIFY the SM, **DECLARE** the affected equipment inoperable and **TAKE** actions as required by Technical Specifications and administrative actions stated in EN-4-104.

2. **INITIATE** a Condition Report for all equipment deficiencies.

NOTE
IF verification is for Refueling Containment Closure, **OR** no SDC Loop operable **OR** in operation **PER** T.S.s, the following steps shall be marked N/A.

F. Were all penetrations in Section 6.1 or 6.2 aligned **OR** controlled to provide Containment Closure by a NO-1-112 tagout, MD-1-100 TEMP ALT, **OR** tracked in the Containment Deviation Log **PER** NO-1-114?

YES / NO / N/A (circle one) _____ SRO

G. Were 11 and 12 Steam Generators verified to be in the required configuration of ATTACHMENT 1 or ATTACHMENT 3 **AND** ATTACHMENT 2 or ATTACHMENT 4, respectively, to provide Containment Closure **OR** controlled by a NO-1-112 tagout, MD-1-100 TEMP ALT, **OR** tracked in the Containment Deviation Log **PER** NO-1-114?

YES / NO / N/A (circle one) _____ SRO

6.5 ACCEPTANCE CRITERIA (Continued) **INITIALS**

H. This test is considered satisfactory **AND** NO-1-114 Containment Closure is established if YES was answered in F and G, above.

YES / NO / N/A (circle one) _____ SRO

1. **IF** not,
THEN NOTIFY the SM, **ENSURE** each Deviation is recorded in the Containment Deviation Log **PER** NO-1-114 **AND ENSURE** each new deviation has been evaluated for impact on Higher Risk Evolutions **PER** NO-1-114.

2. **INITIATE** a Condition Report for equipment found out of alignment from this procedure, a current NO-1-112 tagout, or current NO-1-114 Containment Deviation Log entry.

6.5 ACCEPTANCE CRITERIA (Continued) **INITIALS**

I. This test is considered satisfactory **AND** NO-1-114 Containment Closure is established if the applicable penetration(s) meet at least one of the following criteria:

- Aligned or in the required configuration **PER** this procedure
- Controlled by a NO-1-112 tagout to provide Containment Closure
- Controlled by a MD-1-100 TEMP ALT to provide Containment Closure
- **IF** performing this test while in Mode 5 or 6 for the non-T.S. Surveillance, verification of Containment Closure status **PER** NO-1-114,
  THEN the penetration is tracked in the Containment Deviation Log **PER** NO-1-114.

YES / NO / N/A (circle one) _____ SRO

1. **IF** not, **AND** performing this test while in Refueling Containment Closure, **OR** no SDC Loop operable **OR** in operation **PER** T.S.s,
   THEN NOTIFY the SM, **DECLARE** the affected equipment inoperable and **TAKE** actions as required by Technical Specifications and administrative actions stated in EN-4-104.

2. **IF** not, **AND** performing this test while in Mode 5 or 6 for the non-T.S. Surveillance, verification of Containment Closure status **PER** NO-1-114,
   THEN NOTIFY the SM, **ENSURE** each Deviation is recorded in the Containment Deviation Log **PER** NO-1-114 **AND ENSURE** each new deviation has been evaluated for impact on Higher Risk Evolutions **PER** NO-1-114.

7.0 POST PERFORMANCE ACTIVITIES

INITIALS

PERFORM a post-test page check of this test. _____

8.0 BASES

[B0306] LER 89-22, compensatory measures to ensure both HP-6900-MOV and HP-6901-MOV are shut during core alterations (movement of irradiated fuel assemblies within containment).

[B0330] Bases deigned to prevent Temp. Door installation in place of an Airlock Door unless the RFP is flooded or RCS is capable of being pressurized and SGs available for heat removal **PER** controls of NO-1-114.

[B0331] Safety Screening for MCR 92-069-001-01, retiring O-WGS-690 in place due to inaccessibility.

[B0332] June 5, 1992 letter from B.D. Mann, via B.S. Montgomery to M.G. Polak concerning BGE & NRC agreement that the (4) bolts requirement provides T.S. 3.9.4. Containment Closure against Mode 5 and Mode 6 accidents. Letter also deleted LLRT test requirement.

[B0333] GL 88-17, "LOSS OF DECAY HEAT REMOVAL," identified that STP did not verify Elec. Pen. canisters installed in Mode 6. Became POSRC OI-91-104-07.

[B0334] J.L.Marsala letter to GS-NPO, Requirements for Containment Closure During Lower Modes (5, 6, and Refueling), Local LLRT results correlation to whether or not a valve can be used for Containment Closure.

9.0 RECORDS

A. Records generated by this procedure shall be captured and controlled. Prior to transferring records to Document Management for retention, legibility and completeness of the record shall be verified by the transmitting organization.

B. Maintain records as defined in EN-4-104, Surveillance Testing.

ATTACHMENT 1

11 STEAM GENERATOR OPEN TO CONTAINMENT ATMOSPHERE

CAUTION
Obtain permission from the Control Room Supervisor prior to repositioning any valve in this alignment.

Main Steam Penetration Room

VALVE	DESCRIPTION	NOTE	POSITION	INITIALS
1-FW-4516-MOV	11 S/G FW ISOL	(1)	SHUT	
1-MS-101	11 S/G ATMOS DUMP ISOL	(1)	SHUT	
1-MS-3992-RV	11 S/G MS RV		INSTALLED	
1-MS-3993-RV	11 S/G MS RV		INSTALLED	
1-MS-3994-RV	11 S/G MS RV		INSTALLED	
1-MS-3995-RV	11 S/G MS RV		INSTALLED	
1-MS-3996-RV	11 S/G MS RV		INSTALLED	
1-MS-3997-RV	11 S/G MS RV		INSTALLED	
1-MS-3998-RV	11 S/G MS RV		INSTALLED	
1-MS-3999-RV	11 S/G MS RV		INSTALLED	

(1) **IF NOT** controlled by NO-1-112,
THEN LOG in the Locked Valve Deviation Log

ATTACHMENT 1

11 STEAM GENERATOR OPEN TO CONTAINMENT ATMOSPHERE

CAUTION
Obtain permission from the Control Room Supervisor prior to repositioning any valve in this alignment.

Main Steam Penetration Room

VALVE	DESCRIPTION	NOTE	POSITION	INITIALS
1-MS-251	MN STM SUPP TO AFW PPS ROOT VLV	(1)	SHUT	
1-MS-273	MN STM SUPP TO AFW PPS BYPASS ISOL VLV		SHUT	
1-MS-1121	1-MS-3991 PT ROOT	(1)	SHUT	
1-MS-4045-MOV	11 MSIV BYPASS		SHUT	
1-MS-4043-CV	11 MSIV	(2)	SHUT	
1-IA-1071	IA ROOT STOP 11 MSIV HYD	(1)(6)	SHUT	
1-MSH-101	11 MSIV ACT "A" DRN MANIFOLD ISOL	(6)	OPEN	
1-MSH-102	11 MSIV ACT "B" DRN MANIFOLD ISOL	(6)	OPEN	
1-MSH-4042A-SV **OR** 1-MSH-4042B-SV	11 MSIV DUMP SV CHANNEL A DUMP SOLENOID STEM NUT **OR** 11 MSIV DUMP SV CHANNEL B DUMP SOLENOID STEM NUT	(1) (5)(6) (1) (5)(6)	5 TURNS OPEN IN THE CLOCKWISE DIRECTION	

(1) **IF NOT** controlled by NO-1-112,
THEN LOG in the Locked Valve Deviation Log

(2) If actuator is removed, then verify bottom of stem guide is adjacent to white mark on valve yoke (refer to Attachment 6.)

(5) The Dump Solenoid Valve Cap must be removed to attain access to the Solenoid Stem Nut. **CIRCLE** the DUMP SOLENOID VALVE used.

(6) May be N/A'd if MSIV actuator is removed.

ATTACHMENT 1

11 STEAM GENERATOR OPEN TO CONTAINMENT ATMOSPHERE

CAUTION
Obtain permission from the Control Room Supervisor prior to repositioning any valve in this alignment.

27' Penetration Room

VALVE	DESCRIPTION	NOTE	POSITION	INITIALS
1-PS-102	11 S/G SURFACE SMPL ISOL	(1)	SHUT	
1-PS-101	11 S/G BOTTOM SMPL ISOL	(1)	SHUT	
1-AFW-156	11 S/G AFW LINE DRN		SHUT	
1-AFW-1019	CAPPED CONX ISOL		SHUT	
1-AFW-171	11 S/G AFW CV BYP DRN		SHUT	
1-AFW-1116	4511-PT **AND** 4521B-PT ROOT	(1)	SHUT	
1-AFW-1120	4521A-PT ROOT	(1)	SHUT	
1-AFW-163	11 S/G AFW BYPASS		SHUT	

(1) **IF NOT** controlled by NO-1-112,
THEN LOG in the Locked Valve Deviation Log

ATTACHMENT 1

11 STEAM GENERATOR OPEN TO CONTAINMENT ATMOSPHERE

CAUTION
Obtain permission from the Control Room Supervisor prior to repositioning any valve in this alignment.

27' Penetration Room

VALVE	DESCRIPTION	NOTE	POSITION	INITIALS
1-AFW-162	11 S/G AFW STOP	(1)	SHUT	
1-AFW-170	11 S/G AFW LCV DRAIN		SHUT	
1-AFW-4511-CV	AFW TO 11 S/G ISOL		INSTALLED	
1-AFW-199	13 AFW PUMP 11 S/G CKV		INSTALLED	
1-BD-4010-CV	11 S/G SURFACE B/D ISOL	(1)(4)	SHUT	
AND				
1-PS-102, 1-PS-127, **OR** 1-PS-128	11 S/G SURFACE B/D SMPL ISOL	(1)(4)	SHUT	
- - - - - - - -	- - - - - - - - - - - - - - - - - -		- - - - - -	- - - - - -
OR				
1-BD-194	11 S/G SURFACE B/D ISOL	(1)	SHUT	
OR				
1-BD-198	11 S/G SURFACE B/D B/U ISOL	(1)	SHUT	
1-BD-4011-CV	11 S/G BOTTOM B/D ISOL	(1)(4)	SHUT	
AND				
1-PS-101, 1-PS-125, **OR** 1-PS-126	11 S/G BOTTOM B/D SMPL ISOL	(1)(4)	SHUT	
- - - - - - - -	- - - - - - - - - - - - - - - - - -		- - - - - -	- - - - - -
OR				
1-BD-195	11 S/G BOTTOM B/D ISOL	(1)(3)	SHUT	
OR				
1-BD-199	11 S/G BOTTOM B/D ISOL	(1)(3)	SHUT	

(1) **IF NOT** controlled by NO-1-112,
THEN LOG in the Locked Valve Deviation Log

(3) Valve is located on the 12' of U-1 CNTMT.

ATTACHMENT 1

11 STEAM GENERATOR OPEN TO CONTAINMENT ATMOSPHERE

(4) The CV **AND** at least ONE Sample valve are verified together **OR** at least ONE valve below the dotted line must be verified.

ATTACHMENT 1

11 STEAM GENERATOR OPEN TO CONTAINMENT ATMOSPHERE

CAUTION
Obtain permission from the Control Room Supervisor prior to repositioning any valve in this alignment.

12' Behind Sample Sink

VALVE	DESCRIPTION	NOTE	POSITION	INITIALS
1-MS-156	1-DR-6 STAND PIPE DRN		SHUT	
1-MS-299	1-DR-6 STAND PIPE VENT		SHUT	
1-MS-1280	1-MS-6604 LS ISOL	(1)	SHUT	
1-MS-1281	1-MS-6604 LS ISOL	(1)	SHUT	
1-MS-6612-MOV	1-DR-6 ISOL		SHUT	

Service Water Room

VALVE	DESCRIPTION	NOTE	POSITION	INITIALS
1-AFW-195	4525-CV BYPASS		SHUT	
1-AFW-197	4525-CV INLET	(1)	SHUT	
1-AFW-4525-CV	13 AFW TO 11 S/G FLOW CONTROL		INSTALLED	

27' Turbine Building

VALVE/BKR	DESCRIPTION	NOTE	POSITION	INITIALS
52-11704	1-MS-6612-MOV BKR	(1)	OFF	

(1) **IF NOT** controlled by NO-1-112,
THEN LOG in the Locked Valve Deviation Log

ATTACHMENT 2

12 STEAM GENERATOR OPEN TO CONTAINMENT ATMOSPHERE

CAUTION
Obtain permission from the Control Room Supervisor prior to repositioning any valve in this alignment.

Main Steam Penetration Room

VALVE	DESCRIPTION	NOTE	POSITION	INITIALS
1-FW-4517-MOV	12 S/G FW ISOL	(1)	SHUT	
1-MS-104	12 S/G ATMOS DUMP ISOL	(1)	SHUT	
1-MS-4000-RV	12 S/G MS RV		INSTALLED	
1-MS-4001-RV	12 S/G MS RV		INSTALLED	
1-MS-4002-RV	12 S/G MS RV		INSTALLED	
1-MS-4003-RV	12 S/G MS RV		INSTALLED	
1-MS-4004-RV	12 S/G MS RV		INSTALLED	
1-MS-4005-RV	12 S/G MS RV		INSTALLED	
1-MS-4006-RV	12 S/G MS RV		INSTALLED	
1-MS-4007-RV	12 S/G MS RV		INSTALLED	

(1) **IF NOT** controlled by NO-1-112,
THEN LOG in the Locked Valve Deviation Log

ATTACHMENT 2

12 STEAM GENERATOR OPEN TO CONTAINMENT ATMOSPHERE

CAUTION
Obtain permission from the Control Room Supervisor prior to repositioning any valve in this alignment.

Main Steam Penetration Room

VALVE	DESCRIPTION	NOTE	POSITION	INITIALS
1-MS-336	MN STM SUPP TO AFW PPS ROOT VLV	(1)	SHUT	
1-MS-337	MN STM SUPP TO AFW PPS BYPASS ISOL VLV		SHUT	
1-MS-1127	1-MS-4008 PT ROOT	(1)	SHUT	
1-MS-4052-MOV	12 MSIV BYPASS		SHUT	
1-MS-4048-CV	12 MSIV	(2)	SHUT	
1-IA-1072	IA ROOT STOP 12 MSIV HYD	(1)(6)	SHUT	
1-MSH-104	12 MSIV ACT "A" DRN MANIFOLD ISOL	(6)	OPEN	
1-MSH-105	12 MSIV ACT "B" DRN MANIFOLD ISOL	(6)	OPEN	
1-MSH-4047A-SV **OR** 1-MSH-4047B-SV	12 MSIV DUMP SV CHANNEL A DUMP SOLENOID STEM NUT **OR** 12 MSIV DUMP SV CHANNEL B DUMP SOLENOID STEM NUT	(1) (5)(6) (1) (5)(6)	5 TURNS OPEN IN THE CLOCKWISE DIRECTION	

(1) **IF NOT** controlled by NO-1-112,
THEN LOG in the Locked Valve Deviation Log

(2) If actuator is removed, then verify bottom of stem guide is adjacent to white mark on valve yoke (refer to Attachment 6.)

(5) The Dump Solenoid Valve Cap must be removed to attain access to the Solenoid Stem Nut. **CIRCLE** the DUMP SOLENOID VALVE used.

(6) May be N/A'd if MSIV actuator is removed.

ATTACHMENT 2

12 STEAM GENERATOR OPEN TO CONTAINMENT ATMOSPHERE

CAUTION
Obtain permission from the Control Room Supervisor prior to repositioning any valve in this alignment.

27' East Penetration Room

VALVE	DESCRIPTION	NOTE	POSITION	INITIALS
1-PS-103	12 S/G SURFACE SMPL ISOL	(1)	SHUT	
1-PS-104	12 S/G BOTTOM SMPL ISOL	(1)	SHUT	
1-AFW-175	12 S/G AFW LVL BYP VENT		SHUT	
1-AFW-158	12 S/G AFW LINE DRN		SHUT	
1-AFW-1021	CAPPED CONX		SHUT	
1-AFW-1123	4531B-PT ROOT	(1)	SHUT	
1-AFW-1126	4531B-PT **AND** 4512-PI ROOT	(1)	SHUT	

(1) **IF NOT** controlled by NO-1-112,
THEN LOG in the Locked Valve Deviation Log

ATTACHMENT 2

12 STEAM GENERATOR OPEN TO CONTAINMENT ATMOSPHERE

CAUTION
Obtain permission from the Control Room Supervisor prior to repositioning any valve in this alignment.

27' East Penetration Room

VALVE	DESCRIPTION	NOTE	POSITION	INITIALS
1-AFW-165	12 S/G AFW BYPASS		SHUT	
1-AFW-164	12 S/G AFW STOP	(1)	SHUT	
1-AFW-173	12 S/G AFW LCV DRAIN		SHUT	
1-AFW-4512-CV	AFW TO 12 S/G REG VALVE		INSTALLED	
1-AFW-200	13 AFW PUMP 12 S/G CKV		INSTALLED	
1-BD-4012-CV	12 S/G SURFACE B/D ISOL	(1)(4)	SHUT	
AND				
1-PS-103, 1-PS-136, OR 1-PS-137	12 S/G SURFACE B/D SMPL ISOL	(1)(4)	SHUT	
- - - - - - - -	- - - - - - - - - - - - - - - - - -		- - - - -	- - - - -
OR 1-BD-196	12 S/G SURFACE B/D ISOL	(1)	SHUT	
OR 1-BD-200	12 S/G SURFACE B/D B/U ISOL	(1)	SHUT	
1-BD-4013-CV	12 S/G BOTTOM B/D ISOL	(1)(4)	SHUT	
AND				
1-PS-104, 1-PS-138 OR 1-PS-139	12 S/G BOTTOM B/D SMPL ISOL	(1)(4)	SHUT	
- - - - - - - -	- - - - - - - - - - - - - - - - - -		- - - - -	- - - - -
OR 1-BD-197	12 S/G BOTTOM B/D ISOL	(1)(3)	SHUT	
OR 1-BD-201	12 S/G BOTTOM B/D ISOL	(1)(3)	SHUT	

(1) **IF NOT** controlled by NO-1-112,
THEN LOG in the Locked Valve Deviation Log

(3) Valve is located on the 12' of U-1 CNTMT.

ATTACHMENT 2

12 STEAM GENERATOR OPEN TO CONTAINMENT ATMOSPHERE

(4) The CV **AND** at least ONE Sample valve are verified together **OR** at least ONE valve below the dotted line must be verified.

ATTACHMENT 2

12 STEAM GENERATOR OPEN TO CONTAINMENT ATMOSPHERE

CAUTION
Obtain permission from the Control Room Supervisor prior to repositioning any valve in this alignment.

12' Behind Sample Sink

VALVE	DESCRIPTION	NOTE	POSITION	INITIALS
1-MS-153	1-DR-5 STAND PIPE DRN		SHUT	
1-MS-296	1-DR-5 STAND PIPE VENT		SHUT	
1-MS-6611-MOV	1-DR-5 ISOL		SHUT	
1-MS-1273	1-MS-6603 LS ISOL	(1)	SHUT	
1-MS-1275	1-MS-6603 LS ISOL	(1)	SHUT	

Service Water Room

VALVE	DESCRIPTION	NOTE	POSITION	INITIALS
1-AFW-196	4535-CV BYPASS		SHUT	
1-AFW-198	4535-CV INLET	(1)	SHUT	
1-AFW-4535-CV	13 AFW TO 12 S/G FLOW CONTROL		INSTALLED	

27' Turbine Building

VALVE/BKR	DESCRIPTION	NOTE	POSITION	INITIALS
52-11703	1-MS-6611-MOV BKR	(1)	OFF	

(1) **IF NOT** controlled by NO-1-112,
THEN LOG in the Locked Valve Deviation Log

ATTACHMENT 3

11 STEAM GENERATOR CLOSED TO CONTAINMENT ATMOSPHERE

Verify 11 Steam Generator Containment Side Isolation by completing Column A **OR** Column B of each block.

When Column B is used to satisfy the isolation requirements of a block containing instrumentation,
THEN ENSURE all Column B valves are controlled by NO-1-112 **OR LOG** all valves positioned by Column B in the Locked Valve Deviation Log to ensure proper restoration.

Where a choice of components is listed for an isolation point, circle the component used.

The column is considered complete only if ALL components in that column are verified in the stated condition.

If neither column in a block can be completed, then the Steam Generator is not isolated from Containment and Attachment 1 must be completed or a pre-approved alternate isolation alignment must be provided.

Verification of all SG Pressure Transmitters (PT), Level Transmitters (LT), or Flow Transmitters (FT), shall include the verification of the Test Connection(s) associated with each transmitter, as CAPPED or PLUGGED. This verification **AND** the verification of the transmitter installation shall be concurrently documented by initialing for the transmitter as being INSTALLED.
IF tygon tubing is installed at a test connection,
THEN alternate isolation alignment is required.

Verification of some of the SG instrument isolations requires the use of a safety harness and a safety observer to be able to reach the isolations **PER** Safe Work practices.

With the SG Sluice Rig installed, the SG fill hose connected between the SG Sluice Rig and the Temporary Door in the CNTMT **AND** from the Temporary Door to the fill source may be considered a closed system, if pressurized.

SG Sluice hoses connected between a COD penetration and a SG with inside closure may be considered a closed system (i.e., SG aligned per Attach 3 or Attach 4).

ATTACHMENT 3

11 STEAM GENERATOR CLOSED TO CONTAINMENT ATMOSPHERE

NOTE

Signing for any PT, FT, or LT also signifies that the Test connection(s) for the transmitter has been verified to be capped.

CAUTION

Obtain permission from the Control Room Supervisor prior to repositioning any valve in this alignment.

PT-1013A, LT-1113A, AND LT-1114A INSTRUMENT LEGS

COLUMN A			COLUMN B		
EQUIPMENT DESIGNATION	REQUIRED POSITION	INIT	EQUIPMENT DESIGNATION	REQUIRED POSITION	INIT
PT-1013A	INSTALLED	_____	FW-1501 OR FW-1502	SHUT	_____
MS-1407 OR MS-1408	SHUT	_____			
LT-1113A	INSTALLED	_____	FW-1503 OR FW-1504	SHUT	_____
FW-1506 OR FW-1512	SHUT	_____			
FW-1513 OR FW-1514	SHUT	_____	FW-1587 OR FW-1588	SHUT	_____
LT-1114A	INSTALLED	_____			
FW-1581 OR FW-1582	SHUT	_____			
FW-1584 OR FW-1585	SHUT	_____			
FW-1505	SHUT	_____			

ENSURE all Column B valves are controlled by NO-1-112 OR LOG all valves positioned by Column B in the Locked Valve Deviation Log to ensure proper restoration. Indicate method used.
NO-1-112 OR Locked Valve Deviation Log (Circle one IF Column B used)

ATTACHMENT 3

11 STEAM GENERATOR CLOSED TO CONTAINMENT ATMOSPHERE

NOTE

Signing for any PT, FT, or LT also signifies that the Test connection(s) for the transmitter has been verified to be capped.

CAUTION

Obtain permission from the Control Room Supervisor prior to repositioning any valve in this alignment.

PT-1013B, LT-1113B, LT-1114B AND LT-1105 INSTRUMENT LEGS

COLUMN A			COLUMN B		
EQUIPMENT DESIGNATION	REQUIRED POSITION	INIT	EQUIPMENT DESIGNATION	REQUIRED POSITION	INIT
PT-1013B	INSTALLED	_____	FW-1521 OR FW-1522	SHUT	_____
MS-1410 OR MS-1411	SHUT	_____			
LT-1113B	INSTALLED	_____	FW-1523 OR FW-1524	SHUT	_____
FW-1526 OR FW-1532	SHUT	_____			
FW-1533 OR FW 1534	SHUT	_____	FW-1596 OR FW-1597	SHUT	_____
LT-1114B	INSTALLED	_____			
FW-1590 OR FW-1591	SHUT	_____			
FW-1593 OR FW-1594	SHUT	_____			
LT-1105	INSTALLED				
OR					
FW-1510 AND FW 1517	SHUT	_____			
FW-1519 OR FW-1550	SHUT	_____			
FW-1520 OR FW-1557	SHUT	_____			
FW-1525	SHUT	_____			

ENSURE all Column B valves are controlled by NO-1-112 OR LOG all valves positioned by Column B in the Locked Valve Deviation Log to ensure proper restoration. Indicate method used.

NO-1-112 OR Locked Valve Deviation Log (Circle one IF Column B used)

ATTACHMENT 3

11 STEAM GENERATOR CLOSED TO CONTAINMENT ATMOSPHERE

NOTE

Signing for any PT, FT, or LT also signifies that the Test connection(s) for the transmitter has been verified to be capped.

CAUTION

Obtain permission from the Control Room Supervisor prior to repositioning any valve in this alignment.

PT-1013C, LT-1113C, AND LT-1114C INSTRUMENT LEGS

COLUMN A			COLUMN B		
EQUIPMENT DESIGNATION	REQUIRED POSITION	INIT	EQUIPMENT DESIGNATION	REQUIRED POSITION	INIT
PT-1013C	INSTALLED	_____	FW-1541 OR FW-1542	SHUT	_____
MS-1416 OR MS-1417	SHUT	_____			
LT-1113C	INSTALLED	_____	FW-1543 OR FW-1544	SHUT	_____
FW-1546 OR FW-1552	SHUT	_____			
FW-1553 OR FW-1554	SHUT	_____	FW-1705 OR FW-1706	SHUT	_____
LT-1114C	INSTALLED	_____			
FW-1599 OR FW-1700	SHUT	_____			
FW-1702 OR FW-1703	SHUT	_____			
FW-1545	SHUT	_____			

ENSURE all Column B valves are controlled by NO-1-112 OR LOG all valves positioned by Column B in the Locked Valve Deviation Log to ensure proper restoration. Indicate method used.

NO-1-112 OR Locked Valve Deviation Log (Circle one IF Column B used)

ATTACHMENT 3

11 STEAM GENERATOR CLOSED TO CONTAINMENT ATMOSPHERE

NOTE

Signing for any PT, FT, or LT also signifies that the Test connection(s) for the transmitter has been verified to be capped.

CAUTION

Obtain permission from the Control Room Supervisor prior to repositioning any valve in this alignment.

PT-1013D, LT-1113D, LT-1114D AND LT-1111 INSTRUMENT LEGS

COLUMN A			COLUMN B		
EQUIPMENT DESIGNATION	REQUIRED POSITION	INIT	EQUIPMENT DESIGNATION	REQUIRED POSITION	INIT
PT-1013D	INSTALLED	_____	FW-1561 OR FW-1562	SHUT	_____
MS-1413 OR MS-1414	SHUT	_____			
LT-1113D	INSTALLED	_____	FW-1563 OR FW-1564	SHUT	_____
FW-1566 OR FW-1572	SHUT	_____			
FW-1573 OR FW 1574	SHUT	_____	FW-1714 OR FW-1715	SHUT	_____
LT-1114D	INSTALLED	_____			
FW-1708 OR FW-1709	SHUT	_____			
FW-1711 OR FW-1712	SHUT	_____			
LT-1111	INSTALLED				
OR					
FW-1530 AND FW-1537	SHUT	_____			
FW-1539 OR FW-1570	SHUT	_____			
FW-1540 OR FW-1577	SHUT	_____			
FW-1565	SHUT	_____			

ENSURE all Column B valves are controlled by NO-1-112 OR LOG all valves positioned by Column B in the Locked Valve Deviation Log to ensure proper restoration. Indicate method used.

NO-1-112 OR Locked Valve Deviation Log (Circle one IF Column B used)

ATTACHMENT 3

11 STEAM GENERATOR CLOSED TO CONTAINMENT ATMOSPHERE

NOTE

Signing for any PT, FT, or LT also signifies that the Test connection(s) for the transmitter has been verified to be capped.

CAUTION

Obtain permission from the Control Room Supervisor prior to repositioning any valve in this alignment.

MAIN FEEDWATER HEADER					
COLUMN A			COLUMN B		
EQUIPMENT DESIGNATION	REQUIRED POSITION	INIT	EQUIPMENT DESIGNATION	REQUIRED POSITION	INIT
FW-220 OR FW-221	SHUT	_____	NONE		
FW-133	INSTALLED	_____			

MAIN STEAM HEADER AND FT-1011 INSTRUMENT LINE					
COLUMN A			COLUMN B		
EQUIPMENT DESIGNATION	REQUIRED POSITION	INIT	EQUIPMENT DESIGNATION	REQUIRED POSITION	INIT
FT-1011	INSTALLED	_____	MS-1001 OR MS-1003	SHUT	_____
MS-1005 OR MS-1007	SHUT	_____	MS-1002 OR MS-1004	SHUT	_____
MS-1012 OR MS-1014	SHUT	_____			
MS-1013 OR MS-1015	SHUT	_____			
MS-1006	SHUT	_____			

ENSURE all Column B valves are controlled by NO-1-112 OR LOG all valves positioned by Column B in the Locked Valve Deviation Log to ensure proper restoration. Indicate method used.

NO-1-112 OR Locked Valve Deviation Log (Circle one IF Column B used)

ATTACHMENT 3

11 STEAM GENERATOR CLOSED TO CONTAINMENT ATMOSPHERE

CAUTION
Obtain permission from the Control Room Supervisor prior to repositioning any valve in this alignment.

SG MANWAYS					
COLUMN A			COLUMN B		
EQUIPMENT DESIGNATION	REQUIRED POSITION	INIT	EQUIPMENT DESIGNATION	REQUIRED POSITION	INIT
SECONDARY SIDE MANWAY COVERS (TWO)	INSTALLED	_____			
SECONDARY SIDE HANDHOLE COVERS (8 INCH ID) (SIX)	INSTALLED	_____		NONE	
SECONDARY SIDE INSPECTION PORTS (2 INCH ID) (TWELVE)	INSTALLED	_____			

AUX FEEDWATER					
COLUMN A			COLUMN B		
EQUIPMENT DESIGNATION	REQUIRED POSITION	INIT	EQUIPMENT DESIGNATION	REQUIRED POSITION	INIT
AFW-129	INSTALLED	_____		NONE	

ATTACHMENT 3

11 STEAM GENERATOR CLOSED TO CONTAINMENT ATMOSPHERE

CAUTION
Obtain permission from the Control Room Supervisor prior to repositioning any valve in this alignment.

SG LAYUP

COLUMN A

EQUIPMENT DESIGNATION	REQUIRED POSITION	INIT
GSR-415	SHUT	_____
BD-211 OR BD-212	SHUT	_____

COLUMN B

EQUIPMENT DESIGNATION	REQUIRED POSITION	INIT
SG in RECIRC, DRN(Sec 6.16), OR FILL alignment PER OI-12B with GSR-415 AND / OR BD-211 AND BD-212 open		
GSR-413	SHUT	_____
GSR-417	SHUT	_____
GSR-403	SHUT	_____
GSR-405	SHUT	_____
GSR-51 (N/A if Filter Rig installed)	SHUT	_____
GSR-55 (N/A if Filter Rig installed)	SHUT	_____
GSR-62 (N/A if used in FILL/DRN alignment)	SHUT	_____
GSR-63	SHUT	_____

(continue)

ATTACHMENT 3

11 STEAM GENERATOR CLOSED TO CONTAINMENT ATMOSPHERE

CAUTION
Obtain permission from the Control Room Supervisor prior to repositioning any valve in this alignment.

SG LAYUP - (continued)			
COLUMN A	COLUMN B		
	EQUIPMENT DESIGNATION	REQUIRED POSITION	INIT
	The following valves are N/A if the Filter Rig is NOT installed:		
	GSR-11	SHUT	_____
	GSR-12	SHUT	_____
	GSR-14	SHUT	_____
	GSR-19	SHUT	_____
	GSR-20	SHUT	_____
	GSR-21	SHUT	_____
	GSR-22	SHUT	_____
	GSR-23	SHUT	_____
	GSR-24	SHUT	_____
	GSR-25	SHUT	_____

SG N_2 BLANKETING					
COLUMN A			COLUMN B		
EQUIPMENT DESIGNATION	REQUIRED POSITION	INIT	EQUIPMENT DESIGNATION	REQUIRED POSITION	INIT
N_2-240	SHUT	_____	NONE		

ATTACHMENT 4

12 STEAM GENERATOR CLOSED TO CONTAINMENT ATMOSPHERE

Verify 12 Steam Generator Containment Side Isolation by completing Column A **OR** Column B of each block.

When Column B is used to satisfy the isolation requirements of a block containing instrumentation,
THEN ENSURE all Column B valves are controlled by NO-1-112 **OR LOG** all valves positioned by Column B in the Locked Valve Deviation Log to ensure proper restoration.

Where a choice of components is listed for an isolation point, circle the component used.

The column is considered complete only if ALL components in that column are verified in the stated condition.

If neither column in a block can be completed, then the Steam Generator is not isolated from Containment and Attachment 1 must be completed or a pre-approved alternate isolation alignment must be provided.

Verification of all SG Pressure Transmitters (PT), Level Transmitters (LT), or Flow Transmitters (FT), shall include the verification of the Test Connection(s) associated with each transmitter, as CAPPED or PLUGGED. This verification **AND** the verification of the transmitter installation shall be concurrently documented by initialing for the transmitter as being INSTALLED.
IF tygon tubing is installed at a test connection,
THEN alternate isolation alignment is required.

Verification of some of the SG instrument isolations requires the use of a safety harness and a safety observer to be able to reach the isolations **PER** Safe Work practices.

With the SG Sluice Rig installed, the SG fill hose connected between the SG Sluice Rig and the Temporary Door in the CNTMT **AND** from the Temporary Door to the fill source may be considered a closed system, if pressurized.

SG Sluice hoses connected between a COD penetration and a SG with inside closure may be considered a closed system (i.e., SG aligned per Attach 3 or Attach 4).

ATTACHMENT 4

12 STEAM GENERATOR CLOSED TO CONTAINMENT ATMOSPHERE

NOTE

Signing for any PT, FT, or LT also signifies that the Test connection(s) for the transmitter has been verified to be capped.

CAUTION

Obtain permission from the Control Room Supervisor prior to repositioning any valve in this alignment.

PT-1023A, LT-1123A, AND LT-1124A INSTRUMENT LEGS

COLUMN A			COLUMN B		
EQUIPMENT DESIGNATION	REQUIRED POSITION	INIT	EQUIPMENT DESIGNATION	REQUIRED POSITION	INIT
PT-1023A	INSTALLED	_____	FW-1601 OR FW-1602	SHUT	_____
MS-1419 OR MS-1420	SHUT	_____			
LT-1123A	INSTALLED	_____	FW-1603 OR FW-1604	SHUT	_____
FW-1606 OR FW-1612	SHUT	_____			
FW-1613 OR FW-1614	SHUT	_____	FW-1687 OR FW-1688	SHUT	_____
LT-1124A	INSTALLED	_____			
FW-1681 OR FW-1682	SHUT	_____			
FW-1684 OR FW-1685	SHUT	_____			
FW-1605	SHUT	_____			

ENSURE all Column B valves are controlled by NO-1-112 OR LOG all valves positioned by Column B in the Locked Valve Deviation Log to ensure proper restoration. Indicate method used.

NO-1-112 OR Locked Valve Deviation Log (Circle one IF Column B used)

ATTACHMENT 4

12 STEAM GENERATOR CLOSED TO CONTAINMENT ATMOSPHERE

NOTE

Signing for any PT, FT, or LT also signifies that the Test connection(s) for the transmitter has been verified to be capped.

CAUTION

Obtain permission from the Control Room Supervisor prior to repositioning any valve in this alignment.

PT-1023B, LT-1123B, LT-1124B AND LT-1106 INSTRUMENT LEGS

COLUMN A			COLUMN B		
EQUIPMENT DESIGNATION	REQUIRED POSITION	INIT	EQUIPMENT DESIGNATION	REQUIRED POSITION	INIT
PT-1023B	INSTALLED	_____	FW-1621 OR FW-1622	SHUT	_____
MS-1422 OR MS-1423	SHUT	_____			
LT-1123B	INSTALLED	_____	FW-1623 OR FW-1624	SHUT	_____
FW-1626 OR FW-1632	SHUT	_____			
FW-1633 OR FW 1634	SHUT	_____	FW-1696 OR FW-1697	SHUT	_____
LT-1124B	INSTALLED	_____			
FW-1690 OR FW-1691	SHUT	_____			
FW-1693 OR FW-1694	SHUT	_____			
LT-1106	INSTALLED				
OR					
FW-1610 AND FW 1617	SHUT	_____			
FW-1619 OR FW-1650	SHUT	_____			
FW-1620 OR FW-1657	SHUT	_____			
FW-1625	SHUT	_____			

ENSURE all Column B valves are controlled by NO-1-112 OR LOG all valves positioned by Column B in the Locked Valve Deviation Log to ensure proper restoration. Indicate method used.

NO-1-112 OR Locked Valve Deviation Log (Circle one IF Column B used)

ATTACHMENT 4

12 STEAM GENERATOR CLOSED TO CONTAINMENT ATMOSPHERE

NOTE

Signing for any PT, FT, or LT also signifies that the Test connection(s) for the transmitter has been verified to be capped.

CAUTION

Obtain permission from the Control Room Supervisor prior to repositioning any valve in this alignment.

PT-1023C, LT-1123C, AND LT-1124C INSTRUMENT LEGS

COLUMN A			COLUMN B		
EQUIPMENT DESIGNATION	REQUIRED POSITION	INIT	EQUIPMENT DESIGNATION	REQUIRED POSITION	INIT
PT-1023C	INSTALLED	_____	FW-1641 OR FW-1642	SHUT	_____
MS-1428 OR MS-1429	SHUT	_____			
LT-1123C	INSTALLED	_____	FW-1643 OR FW-1644	SHUT	_____
FW-1646 OR FW-1652	SHUT	_____			
FW-1653 OR FW-1654	SHUT	_____	FW-1805 OR FW-1806	SHUT	_____
LT-1124C	INSTALLED	_____			
FW-1699 OR FW-1800	SHUT	_____			
FW-1802 OR FW-1803	SHUT	_____			
FW-1645	SHUT	_____			

ENSURE all Column B valves are controlled by NO-1-112 OR LOG all valves positioned by Column B in the Locked Valve Deviation Log to ensure proper restoration. Indicate method used.

NO-1-112 OR Locked Valve Deviation Log (Circle one IF Column B used)

ATTACHMENT 4

12 STEAM GENERATOR CLOSED TO CONTAINMENT ATMOSPHERE

NOTE

Signing for any PT, FT, or LT also signifies that the Test connection(s) for the transmitter has been verified to be capped.

CAUTION

Obtain permission from the Control Room Supervisor prior to repositioning any valve in this alignment.

PT-1023D, LT-1123D, LT-1124D AND LT-1121 INSTRUMENT LEGS

COLUMN A			COLUMN B		
EQUIPMENT DESIGNATION	REQUIRED POSITION	INIT	EQUIPMENT DESIGNATION	REQUIRED POSITION	INIT
PT-1023D	INSTALLED	_____	FW-1661 OR FW-1662	SHUT	_____
MS-1425 OR MS-1426	SHUT	_____			
LT-1123D	INSTALLED	_____	FW-1663 OR FW-1664	SHUT	_____
FW-1666 OR FW-1672	SHUT	_____			
FW-1673 OR FW 1674	SHUT	_____	FW-1814 OR FW-1815	SHUT	_____
LT-1124D	INSTALLED	_____			
FW-1808 OR FW-1809	SHUT	_____			
FW-1811 OR FW-1812	SHUT	_____			
LT-1121	INSTALLED				
OR					
FW-1630 AND FW-1637	SHUT	_____			
FW-1639 OR FW-1670	SHUT	_____			
FW-1640 OR FW-1677	SHUT	_____			
FW-1665	SHUT	_____			

ENSURE all Column B valves are controlled by NO-1-112 OR LOG all valves positioned by Column B in the Locked Valve Deviation Log to ensure proper restoration. Indicate method used.

NO-1-112 OR Locked Valve Deviation Log (Circle one IF Column B used)

ATTACHMENT 4

12 STEAM GENERATOR CLOSED TO CONTAINMENT ATMOSPHERE

NOTE

Signing for any PT, FT, or LT also signifies that the Test connection(s) for the transmitter has been verified to be capped.

CAUTION

Obtain permission from the Control Room Supervisor prior to repositioning any valve in this alignment.

MAIN FEEDWATER HEADER					
COLUMN A			COLUMN B		
EQUIPMENT DESIGNATION	REQUIRED POSITION	INIT	EQUIPMENT DESIGNATION	REQUIRED POSITION	INIT
FW-222 OR FW-223	SHUT	_____	NONE		
FW-130	INSTALLED	_____			

MAIN STEAM HEADER AND FT-1021 INSTRUMENT LINE					
COLUMN A			COLUMN B		
EQUIPMENT DESIGNATION	REQUIRED POSITION	INIT	EQUIPMENT DESIGNATION	REQUIRED POSITION	INIT
FT-1021	INSTALLED	_____	MS-1016 OR MS-1018	SHUT	_____
MS-1027 OR MS-1029	SHUT	_____	MS-1017 OR MS-1019	SHUT	_____
MS-1028 OR MS-1030	SHUT	_____			
MS-1020 OR MS-1021	SHUT	_____			
MS-1022	SHUT	_____			

ENSURE all Column B valves are controlled by NO-1-112 OR LOG all valves positioned by Column B in the Locked Valve Deviation Log to ensure proper restoration. Indicate method used.

NO-1-112 OR Locked Valve Deviation Log (Circle one IF Column B used)

ATTACHMENT 4

12 STEAM GENERATOR CLOSED TO CONTAINMENT ATMOSPHERE

CAUTION
Obtain permission from the Control Room Supervisor prior to repositioning any valve in this alignment.

SG MANWAYS					
COLUMN A			COLUMN B		
EQUIPMENT DESIGNATION	REQUIRED POSITION	INIT	EQUIPMENT DESIGNATION	REQUIRED POSITION	INIT
SECONDARY SIDE MANWAY COVERS (TWO)	INSTALLED	_____			
SECONDARY SIDE HANDHOLE COVERS (8 INCH ID) (SIX)	INSTALLED	_____		NONE	
SECONDARY SIDE INSPECTION PORTS (2 INCH ID) (TWELVE)	INSTALLED	_____			

AUX FEEDWATER					
COLUMN A			COLUMN B		
EQUIPMENT DESIGNATION	REQUIRED POSITION	INIT	EQUIPMENT DESIGNATION	REQUIRED POSITION	INIT
AFW-130	INSTALLED	_____		NONE	

ATTACHMENT 4

12 STEAM GENERATOR CLOSED TO CONTAINMENT ATMOSPHERE

CAUTION
Obtain permission from the Control Room Supervisor prior to repositioning any valve in this alignment.

SG LAYUP

COLUMN A

EQUIPMENT DESIGNATION	REQUIRED POSITION	INIT
GSR-411	SHUT	_____
BD-213 OR BD-214	SHUT	_____

COLUMN B

EQUIPMENT DESIGNATION	REQUIRED POSITION	INIT
SG in RECIRC, DRN(Sec 6.17), OR FILL alignment PER OI-12B with GSR-411 AND / OR BD-213 AND BD-214 open		
GSR-413	SHUT	_____
GSR-417	SHUT	_____
GSR-403	SHUT	_____
GSR-405	SHUT	_____
GSR-51 (N/A if Filter Rig installed)	SHUT	_____
GSR-55 (N/A if Filter Rig installed)	SHUT	_____
GSR-62 (N/A if used in FILL/DRN alignment)	SHUT	_____
GSR-63	SHUT	_____

(continue)

ATTACHMENT 4

12 STEAM GENERATOR CLOSED TO CONTAINMENT ATMOSPHERE

CAUTION
Obtain permission from the Control Room Supervisor prior to repositioning any valve in this alignment.

SG LAYUP - (continued)			
COLUMN A	COLUMN B		
	EQUIPMENT DESIGNATION	REQUIRED POSITION	INIT
	The following valves are N/A if the Filter Rig is NOT installed:		
	GSR-11	SHUT	_____
	GSR-12	SHUT	_____
	GSR-14	SHUT	_____
	GSR-19	SHUT	_____
	GSR-20	SHUT	_____
	GSR-21	SHUT	_____
	GSR-22	SHUT	_____
	GSR-23	SHUT	_____
	GSR-24	SHUT	_____
	GSR-25	SHUT	_____

SG N_2 BLANKETING					
COLUMN A			COLUMN B		
EQUIPMENT DESIGNATION	REQUIRED POSITION	INIT	EQUIPMENT DESIGNATION	REQUIRED POSITION	INIT
N_2-243	SHUT	_____	NONE		

ATTACHMENT 5

VALVES REQUIRING SCAFFOLDING/LADDER

27' WEST PENETRATION ROOM		
PEN	VALVE NUMBER	LOCATION
1A	1-PS-197	7' OVERHEAD, 2' FROM CNTMT WALL
1C	1-CVC-359	NE CORNER, 12' OVERHEAD

5' WEST PENETRATION ROOM		
PEN	VALVE NUMBER	LOCATION
7A	1-ILRT-1	2' BELOW 27' DECKING
7A	1-ILRT-5	2' BELOW 27' DECKING
7B	1-ILRT-2	2' BELOW 27' DECKING
7B	1-ILRT-6	2' BELOW 27' DECKING
61	0-SFP-219	NE CORNER, 4' BELOW 27' DECKING
37	0-PSW-1004	4' BELOW 27' DECKING

ATTACHMENT 5

VALVES REQUIRING SCAFFOLDING/LADDER

27' EAST PENETRATION ROOM		
PEN	VALVE NUMBER	LOCATION
13	1-CPA-101	36' LEVEL, ABOVE LADDER TO 5'

INSIDE CONTAINMENT		
PEN	VALVE NUMBER	LOCATION
7B	BLIND FLANGE	BASEMENT, BEHIND WEST STAIRWELL, 20' OVERHEAD
60	1-ES-144	33' ELEVATION, WEST SIDE
37	0-PSW-1019	BASEMENT, WEST WALL, 20' OVERHEAD
2A	1-CVC-376	SW, 9' IN OVERHEAD
2A	1-CVC-379	SW, 15' IN OVERHEAD
2A	1-CVC-3564	25' ABOVE 12 RCP OIL DRAIN TANK
18	1-CC-482	BASEMENT, 30' ABOVE S/G RECIRC RIG
16	1-CC-486	BASEMENT, 30' ABOVE S/G RECIRC RIG
42	0-SFP-3	S END OF REFUELING POOL
50	BLIND FLANGE	BASEMENT, EAST SIDE, 25' OVERHEAD

ATTACHMENT 6

MSIV DIAGRAM

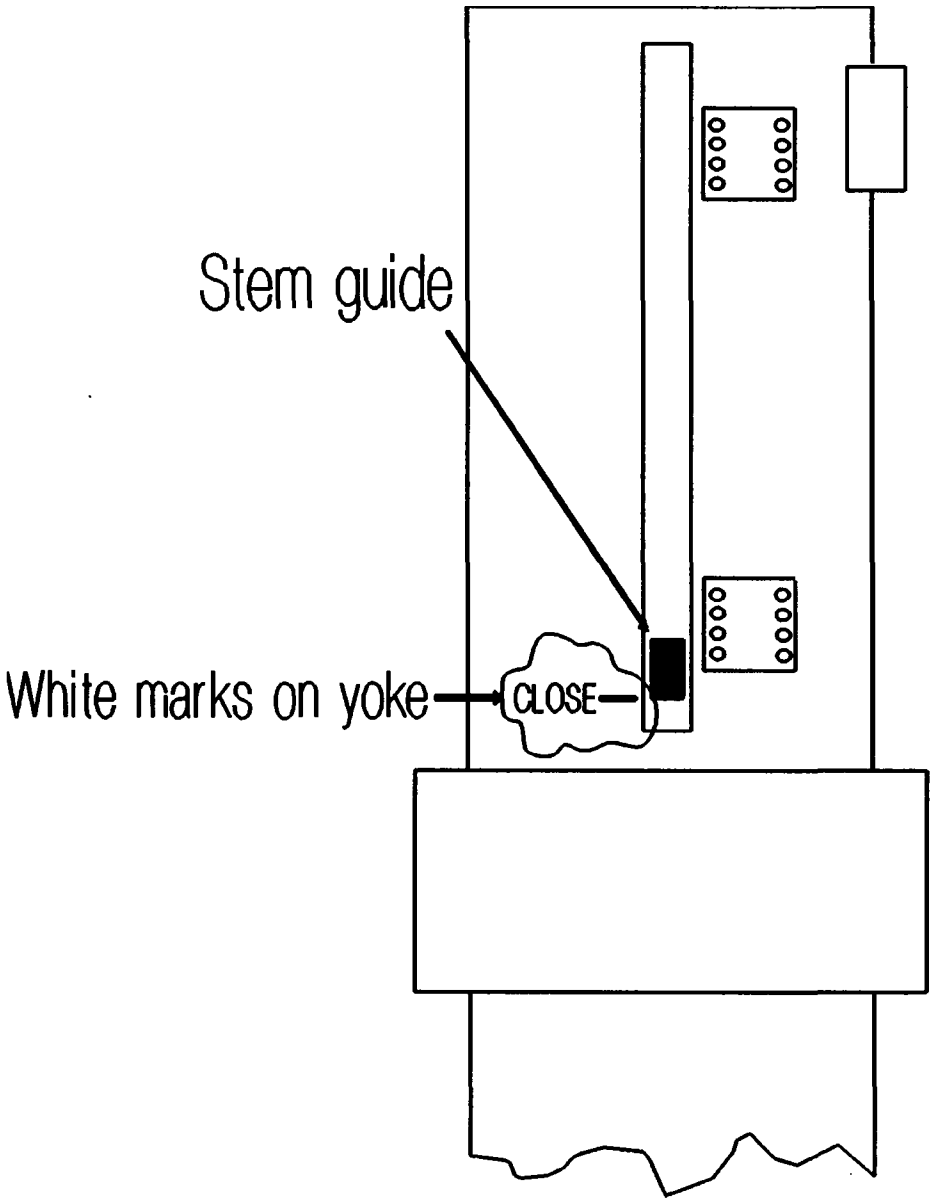

The MSIV is shut when the bottom of the stem guide is adjacent to the white marks on the yoke

CALVERT CLIFFS NUCLEAR POWER PLANT
SURVEILLANCE TEST PROCEDURE
UNIT TWO

STP O-55A-2

CONTAINMENT CLOSURE VERIFICATION

REVISION 34

SAFETY RELATED

CONTINUOUS USE

Approval Authority: E.D. Dean III 2/9/2007
Signature/Date

Effective Date: 2/19/2007

SURVEILLANCE TEST PROCEDURES ADDITIONAL COVER SHEET INFORMATION

A. **Test Performance**

Permission to perform test: _____ / ____ / _____
Shift Manager Date Time

B. **Test completion, results review and approval** (Circle appropriate answer)

Accept. Criteria in spec?	YES NO N/A	Adjustments made?	YES NO N/A
As found results in spec?	YES NO N/A	CR submitted?	YES NO N/A
As left results in spec?	YES NO N/A	Malfunctions indicated?	YES NO N/A

REMARKS: _____

Test completed by: _____ / ____ / _____
Date Time

Analysis of results: _____

Shift Manager review: _____ / _____
Date

Analysis/Comments: _____

Functional Surveillance
Test Coordinator: _____ Date: _____

EQSE (if required): _____ Date: _____

* PORC Meeting No.: _____ Date: _____

* Plant General Manager: _____ Date: _____

* Required only if completed test on SR and designated NSR structures, systems and components (per Q List) identified a malfunction or were out of specification.
Attach a separate sheet, if necessary, to document additional comments.

TABLE OF CONTENTS

TITLE	PAGE
1.0 PURPOSE	5
2.0 APPLICABILITY/SCOPE	5
3.0 REFERENCES AND DEFINITIONS	9
4.0 PREREQUISITES	10
5.0 PRECAUTIONS	11
6.0 PERFORMANCE	12
6.1 MECHANICAL PENETRATION CHECKS	12
6.2 ELECTRICAL PENETRATION CHECKS	126
6.3 21 STEAM GENERATOR CHECKS	129
6.4 22 STEAM GENERATOR CHECKS	129
6.5 ACCEPTANCE CRITERIA	130
7.0 POST PERFORMANCE ACTIVITIES	134
8.0 BASES	134
9.0 RECORDS	134
ATTACHMENT 1 21 STEAM GENERATOR OPEN TO CONTAINMENT ATMOSPHERE	135
ATTACHMENT 2 22 STEAM GENERATOR OPEN TO THE CONTAINMENT ATMOSPHERE	140
ATTACHMENT 3 21 STEAM GENERATOR CLOSED TO CONTAINMENT ATMOSPHERE	145
ATTACHMENT 4 22 STEAM GENERATOR CLOSED TO CONTAINMENT ATMOSPHERE	154
ATTACHMENT 5 VALVES REQUIRING SCAFFOLDING/LADDER	163
ATTACHMENT 6 MSIV DIAGRAM	165

LIST OF EFFECTIVE PAGES

PAGE NUMBERS	REVISION
1-165	34

PROCEDURE ALTERATIONS

PAGES	REVISION/CHANGES
121	03406

1.0 PURPOSE

A. The primary purpose of this test is to be used for aligning or verification of Containment Closure in Modes 5 **OR** 6, as applicable, per Technical Specifications Surveillance Requirements, by ensuring that each penetration providing direct access from the containment atmosphere to the outside atmosphere is closed **OR** controlled.

B. This test may also be used for the alignment and verification of the status of Containment Closure, **not** applicable to Technical Specifications Surveillance Requirements.

2.0 APPLICABILITY/SCOPE

A. Performance of this STP fulfills the Surveillance Requirements of the following Technical Specifications:

- TS 3.9.3, for Containment Penetrations during movement of irradiated fuel assemblies within containment.

OR

- TS 3.9.4 or 3.9.5, for no SDC loop OPERABLE **OR** in operation.

B. This test checks the position of valves and components for Containment penetrations and is written assuming that each penetration is intact with the respective containment isolation valves operable and manual valves installed. Containment closure for individual penetrations may also be established by tagout **PER** NO-1-112, Temporary Alteration **PER** MD-1-100, **OR** Containment Closure NO-1-114 controls, and be evaluated separately by the CRS. **[B0334]**

C. Performance of this test is the same for the requirements of non-T.S., verification of Containment Closure for Reduced Inventory **AND** Shutdown Safety, but is strictly controlled **PER** NO-1-114.

2.0 APPLICABILITY/SCOPE (Continued)

D. Test Performance Requirements:

1. **IF** a penetration is controlled by a tagout **PER** NO-1-112 **OR** Temporary Alteration(TA) **PER** MD-1-100, **AND** is aligned differently than shown here, **THEN**:

   - **REVIEW** the tagout/TA to be sure it meets Closure requirements, including valves within the boundary
   - **PLACE** a circled comment number in the initials column of the alignment
   - **LIST** the comment number and specific tagout number in the Supplemental Cover Sheet remarks section

2. **IF** this test is performed for Reduced Inventory operations **OR** Safe Shutdown requirements of NO-1-114,
   THEN DOCUMENT all deviations as follows:

   - **REVIEW** the deviation, ensuring that it is being tracked in the Containment Closure Deviation Log with a restoration plan in place **PER** NO-1-114
   - **PLACE** a circled comment number in the initials column of the alignment
   - **LIST** in the Supplemental Cover Sheet remarks section, the comment number and indicate that a deviation exists and is being tracked in the Containment Closure Deviation Log

3. **IF** this test is performed for Restricted Containment Closure, **THEN ENSURE** Containment Closure Alignment tags are hung **PER** NO-1-112.

4. The initial alignment of power operated valves should be coordinated with the performance of any associated STP, such as STP 0-66D-2 for CC CNTMT Isolations, to prevent pre-conditioning the valves.

5. Verification of valve position using remote indication is acceptable provided the position indicator is operable. Local observation of valve position should be used in those cases where remote position indication is suspect.

6. For those penetrations where both inside and outside Containment alignments are provided **AND** unless stated otherwise, either alignment may be performed and the choice is left to the discretion of the CRS.

7. Steps in this test may be performed in any order.

8. Pipe caps and flanges are to be visually checked for leakage or coverage with boric acid. Write a Condition Report and take appropriate actions as necessary.

2.0.D APPLICABILITY/SCOPE (Continued)

9. This test shall be performed by individuals qualified on the watch stations for the affected equipment.

10. The Shift Manager shall determine if a pre-test briefing is required and direct the SRO accordingly.

11. All valves that are positioned off-normal to establish Containment Closure will be controlled **PER** NO-1-112, Safety Tagging **OR** logged in the Locked Valve Deviation Log, to ensure that they will be aligned PRIOR to Mode change.

2.0 APPLICABILITY/SCOPE (Continued)

E. Indicate the reason for performing this STP:

☐ Alignment or verification of Containment Closure **PER** TS 3.9.3, for Containment Penetrations during movement of irradiated fuel assemblies within containment.

☐ Alignment or verification of Containment Closure, **PER** TS 3.9.4 or 3.9.5, for no SDC loop OPERABLE **OR** in operation.

☐ Alignment or verification of Containment Closure for Safe Shutdown or Reduced Inventory requirements of NO-1-114.

☐ Post Maintenance or Operability Verification. Enter penetrations and/or attachments to be performed in Pre-surveillance Remarks.
- Individual penetrations and/or attachments may be considered independent and may be omitted in their entirety for equipment not verified.

MO/CR numbers: _____

Pre-surveillance remarks: _____

_____

_____

_____

_____

_____

_____

_____

_____

_____

Determination made by: _____
(SRO)

3.0 REFERENCES AND DEFINITIONS

3.1 REFERENCES

A. **P&IDs**

1. OM SERIES

B. **Procedures**

1. EN-4-104, Surveillance Testing
2. NO-1-114, Containment Closure
3. NO-1-112, Safety Tagging

3.2 DEFINITIONS

A. **DEVIATION:** means Containment Closure Deviation **PER** NO-1-114.

B. **CLOSED SYSTEM:** a system whose piping and components will prevent Lower Mode Operations Containment Pressure from relieving to the outside atmosphere. Such systems may be closed inside or outside the Containment. If properly oriented, check valves may be used as boundaries.

4.0 PREREQUISITES

INITIALS

A. **IF** Containment Closure is being aligned or verified **PER** T.S.s, **THEN NOTIFY** Outage Management and Safety Tagging that all Maintenance activities in progress or being planned to be performed, which could cause a breach of closure, shall have tagout boundaries established to prevent loss of closure.

OR

IF Containment Closure is being verified for operations covered by NO-1-114,
THEN ENSURE Outage Management and Safety Tagging are notified that all Maintenance activities in progress or being planned to be performed, which may cause a deviation to Closure as allowed by NO-1-114, must have restoration plans in place.

_____
Name of Outage Management Rep. notified

_____
Name of Safety Tagging Rep. notified

Notified by:

_____/_____/_____
Shift Manager Date Time

B. A pre-test briefing has been held.
(N/A if Shift Manager has determined that a pre-test briefing not required)

_____
SRO

C. **PERFORM** a page check of this procedure. _____

5.0 PRECAUTIONS

A. **STOP** the test, **STABILIZE** the plant and **NOTIFY** the Shift Manager for any of the following:

- Equipment malfunctions
- Out of tolerance items
- Conditions outside those allowed by Technical Specifications
- Unexpected plant responses

B. DO **NOT** reposition any valve in this test without CRS approval.

C. Manual valve position verification shall be performed by moving the valve in the shut direction **ONLY**.

D. Unless specifically directed by this procedure, DO **NOT** use the local handwheel to verify position of MOVs. Doing so renders the MOV inoperable.

E. Valve positions shown in the flow diagrams DO **NOT** necessarily represent required valve positions. Required valve positions are delineated in the valve alignment.

F. **NO DEVIATIONS** are acceptable when aligning Containment Closure **PER** TS ACTIONS 3.9.4.A **OR** 3.9.5.B, for no SDC Loop operable **OR** in operation.

G. **WHEN** aligning or verifying Containment Closure for Reduced Inventory, **THEN ONLY** those deviations which have been approved by the GS-NPO and have Contingency plans in place for timely restoration, are allowed. (Reference NO-1-114)

H. **WHEN** aligning or verifying Containment Closure for Refueling, **THEN ONLY** the deviations for the Containment Personnel Airlock, Containment Emergency Airlock Temporary Door, and the Containment Outage Door are allowed, **PER** TS 3.9.3.

I. The Containment Outage Door (COD) SHALL **NOT** be used for ANY Closure requirements during Severe Weather conditions.

6.0 PERFORMANCE

6.1 MECHANICAL PENETRATION CHECKS

VERIFY that Containment Closure is established by checking the following alignments for each penetration:

6.1 MECHANICAL PENETRATION CHECKS (Continued)

27' WEST PENETRATION ROOM

(VIEW FROM OUTSIDE CONTAINMENT)

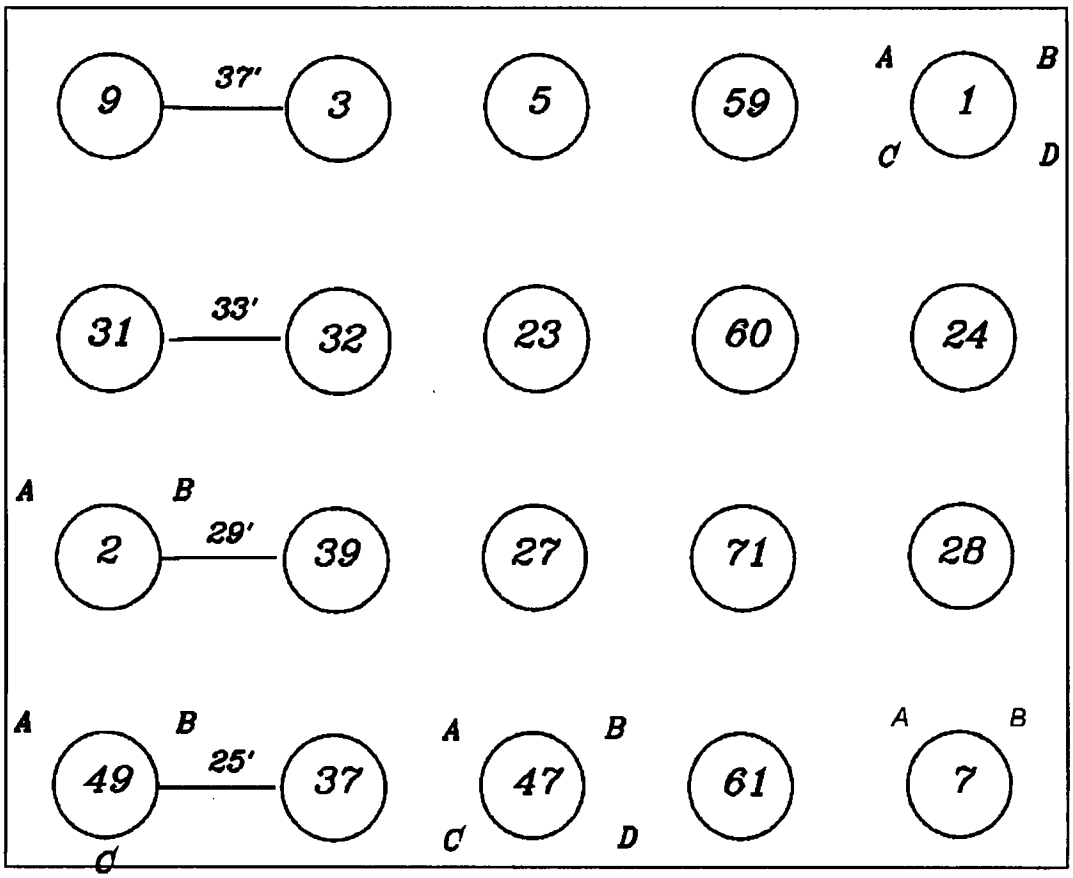

9-CNTMT SPRAY	3-SAFETY INJ	5-SAFETY INJ	59- SFP COOLING	1-RCS SAMPLE, VENT, CBO, PASS
31-SRW FROM CNTMT CLR	32-SRW FROM CNTMT CLR	23-RCDT	60- AUX STM	24-QT O_2 SAMPLE
2-CVCS	39- SIT LEAK	27-SRW TO CNTMT CLR	71- GROUND	28-SRW TO CNTMT CLR
49-H_2 SAMPLE	37- PLANT SERVICE WATER	47- H_2 SAMPLE	61- SFP CLG	7- ILRT

6.1 MECHANICAL PENETRATION CHECKS (Continued)

PENETRATION 1A RCS SAMPLES

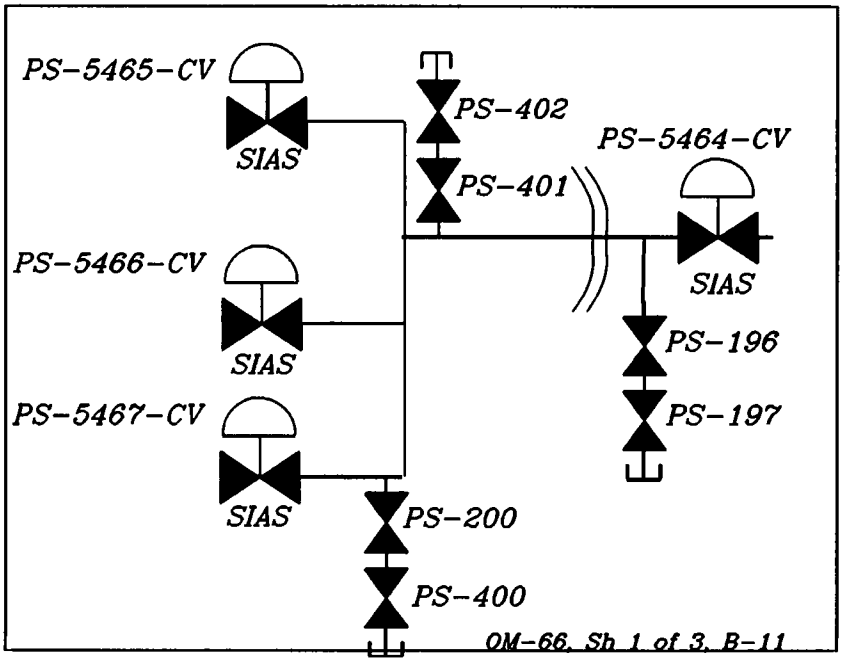

OUTSIDE CONTAINMENT ALIGNMENT

VALVE	POSITION	LOCATION	INITIALS
2-PS-197	LOCKED SHUT	27' WEST PENET ROOM, NE CORNER, NEAR FLOOR	
2-PS-196	LOCKED SHUT	27' WEST PENET ROOM, NE CORNER, NEAR FLOOR	
2-PS-5464-CV	SHUT	2C10	

6.1 MECHANICAL PENETRATION CHECKS (Continued)

PENETRATION 1A RCS SAMPLES (continued)

INSIDE CONTAINMENT ALIGNMENT

VALVE	POSITION	LOCATION	INITIALS
2-PS-402	LOCKED SHUT	WEST STAIRWELL FIRST LEVEL DOWN FROM 45'	
2-PS-401	LOCKED SHUT	WEST STAIRWELL FIRST LEVEL DOWN FROM 45'	
2-PS-400	LOCKED SHUT	BASEMENT, NORTH WALL OF 21 S/G SUPPORT STANCHION	
2-PS-200	LOCKED SHUT	BASEMENT, NORTH WALL OF 21 S/G SUPPORT STANCHION	
2-PS-5465-CV	SHUT	2C90	
2-PS-5466-CV	SHUT	2C90	
2-PS-5467-CV	SHUT	2C90	

6.1 MECHANICAL PENETRATION CHECKS (Continued)

PENETRATION 1B CONTAINMENT VENT HEADER

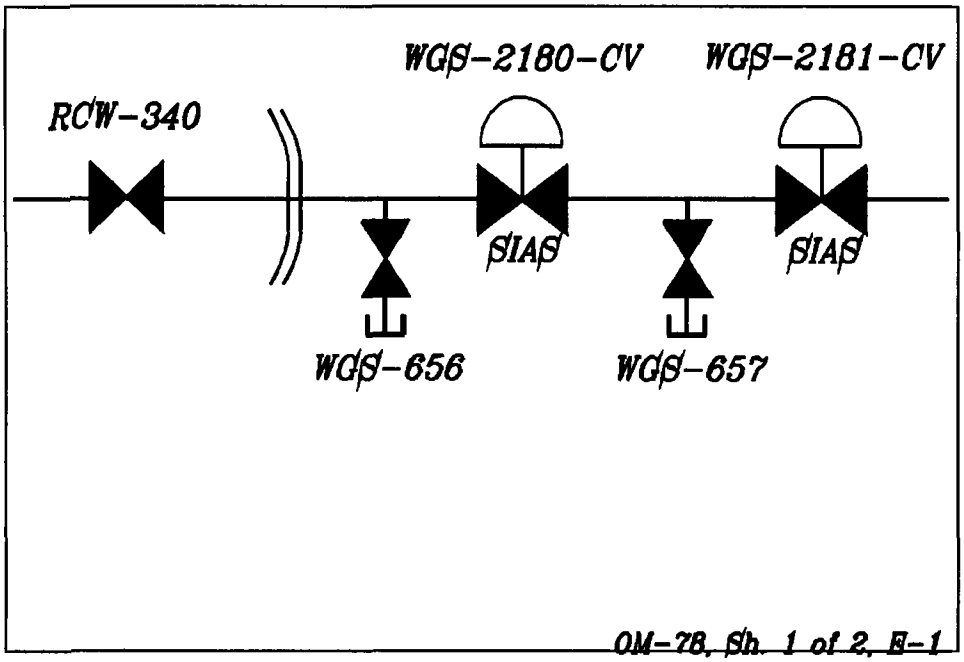

OUTSIDE CONTAINMENT ALIGNMENT

VALVE	POSITION	LOCATION	INITIALS
2-WGS-2180-CV	SHUT	2C10	
0-WGS-656	LOCKED SHUT	27' WEST PENET ROOM NE CORNER	

OR

2-WGS-2181-CV	SHUT	2C10	
0-WGS-657	LOCKED SHUT	27' WEST PENET ROOM NE CORNER, 10' OVERHEAD	
0-WGS-656	LOCKED SHUT	27' WEST PENET ROOM NE CORNER	

6.1 MECHANICAL PENETRATION CHECKS (Continued)

PENETRATION 1B CONTAINMENT VENT HEADER (continued)

INSIDE CONTAINMENT ALIGNMENT

2-RCW-340	SHUT (1)	AT PEN 1B	

(1) IF NOT controlled by NO-1-112,
THEN LOG in the Locked Valve Deviation Log

6.1 MECHANICAL PENETRATION CHECKS (Continued)

PENETRATION 1C RCP BLEEDOFF

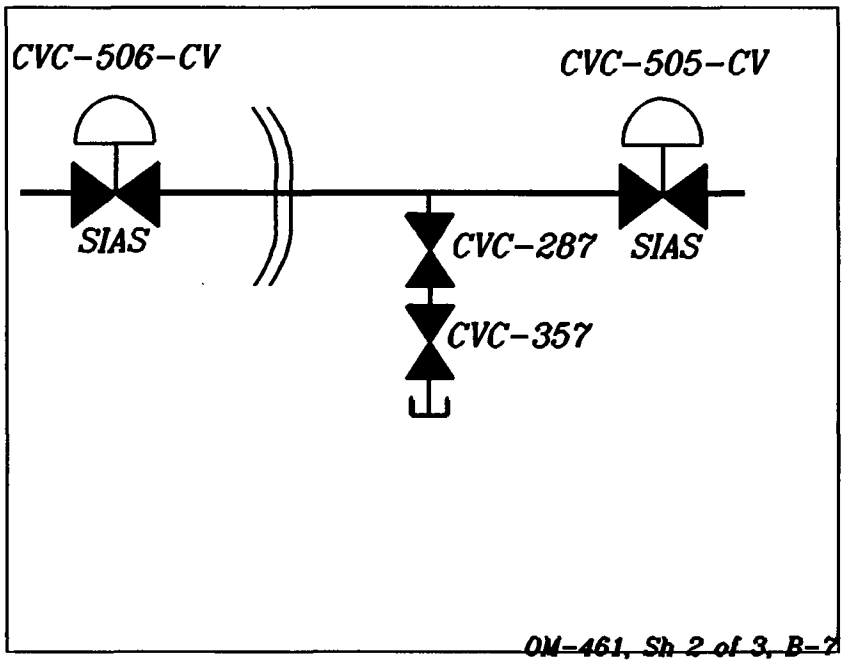

OUTSIDE CONTAINMENT ALIGNMENT

VALVE	POSITION	LOCATION	INITIALS
2-CVC-505-CV	SHUT (1)	2C07	
2-CVC-357	LOCKED SHUT	27' WEST PENET ROOM, S WALL 2', ABOVE DECKING	
2-CVC-287	LOCKED SHUT	27' WEST PENET ROOM, S WALL 2', ABOVE DECKING	

INSIDE CONTAINMENT ALIGNMENT

2-CVC-506-CV	SHUT (1)	2C07	

(1) IF NOT controlled by NO-1-112,
THEN LOG in the Locked Valve Deviation Log

6.1 MECHANICAL PENETRATION CHECKS (Continued)

PENETRATION 1D PASS SAMPLE RETURN

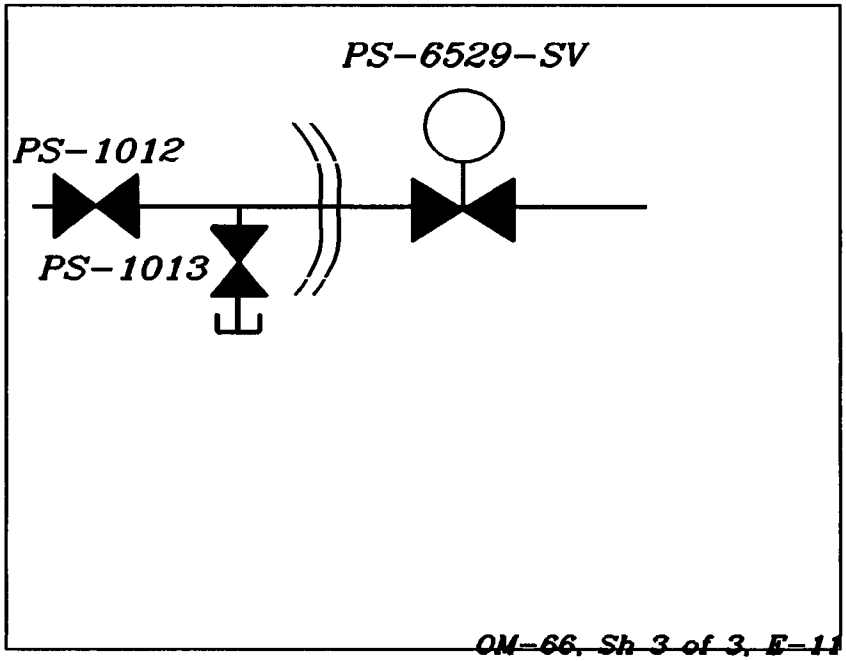

OUTSIDE CONTAINMENT ALIGNMENT

VALVE	POSITION	LOCATION	INITIALS
2-PS-6529-SV	LOCKED SHUT KEY REMOVED	1C102	

INSIDE CONTAINMENT ALIGNMENT

2-PS-1013	LOCKED SHUT	W STAIRS 20' EL LANDING	
2-PS-1012	SHUT (1)	10' EL NE ATOP RCDT	

(1) **IF NOT** controlled by NO-1-112,
THEN LOG in the Locked Valve Deviation Log

6.1 MECHANICAL PENETRATION CHECKS (Continued)

PENETRATION 24 QUENCH TANK O_2 SAMPLE

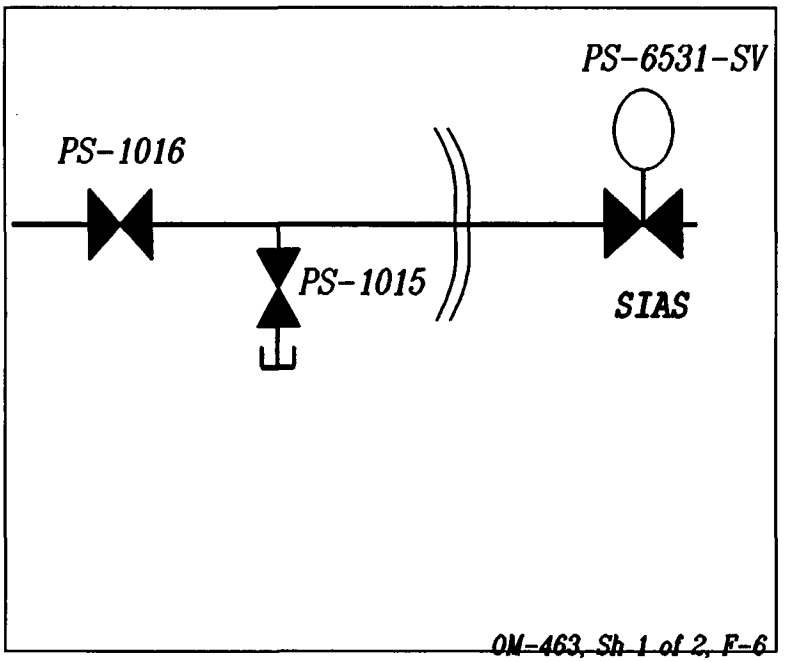

OUTSIDE CONTAINMENT ALIGNMENT

VALVE	POSITION	LOCATION	INITIALS
2-PS-6531-SV	LOCKED SHUT KEY REMOVED	1C102	

INSIDE CONTAINMENT ALIGNMENT

2-PS-1015	LOCKED SHUT	W STAIRWELL, FIRST PLATFORM UP FROM BASEMENT, E SIDE	
2-PS-1016	SHUT (1)	W STAIRWELL, FIRST PLATFORM UP FROM BASEMENT, E SIDE	

(1) **IF NOT** controlled by NO-1-112,
THEN LOG in the Locked Valve Deviation Log

6.1 MECHANICAL PENETRATION CHECKS (Continued)

PENETRATION 7A ILRT TEST

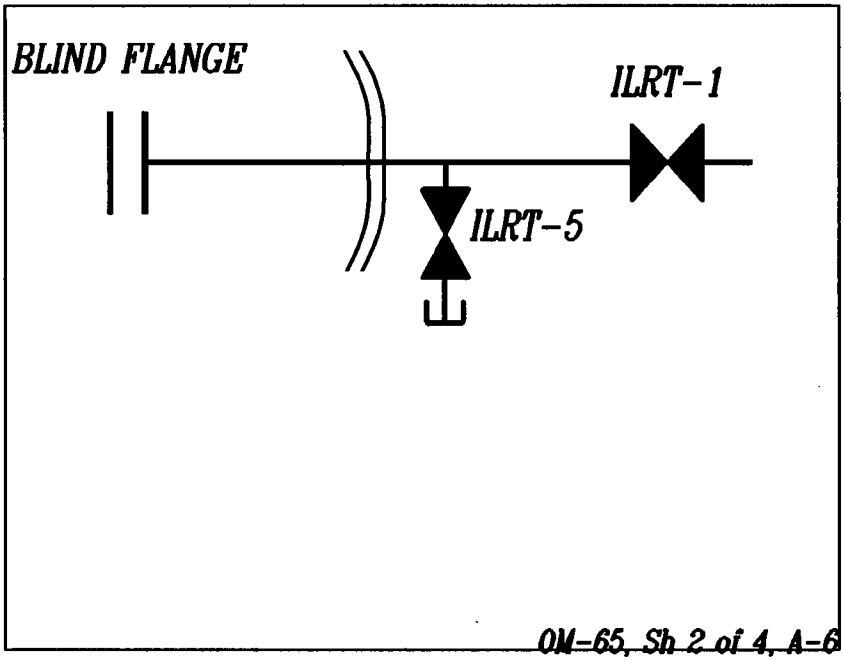

OUTSIDE CONTAINMENT ALIGNMENT

VALVE	POSITION	LOCATION	INITIALS
2-ILRT-5	LOCKED SHUT	5' WEST PENET ROOM, 2' BELOW 27' DECKING	
2-ILRT-1	LOCKED SHUT	5' WEST PENET ROOM, 2' BELOW 27' DECKING	

INSIDE CONTAINMENT ALIGNMENT

BLIND FLANGE	INSTALLED	BASEMENT, BEHIND WEST STAIRWELL, 20' OVERHEAD	

6.1 MECHANICAL PENETRATION CHECKS (Continued)

PENETRATION 7B ILRT TEST

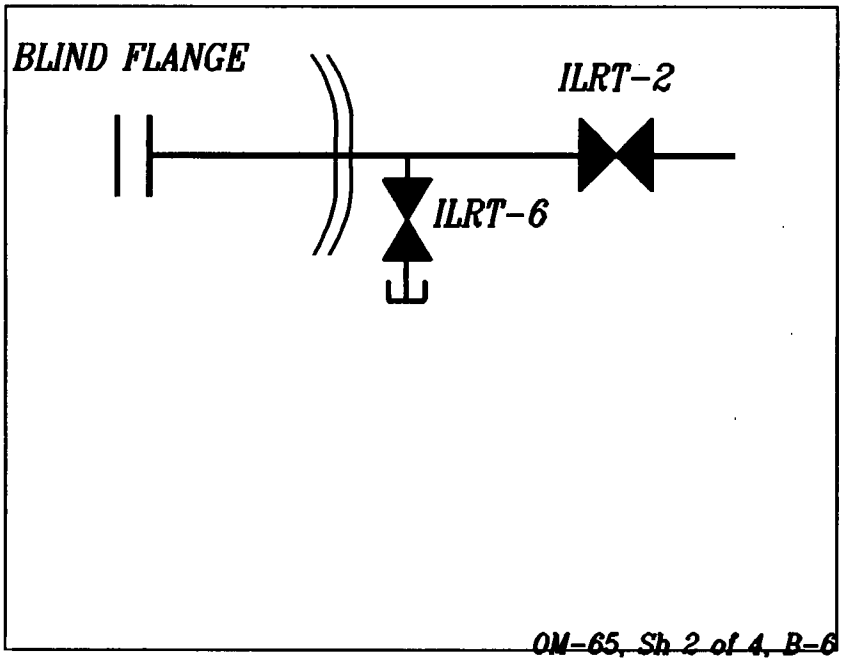

OUTSIDE CONTAINMENT ALIGNMENT

VALVE	POSITION	LOCATION	INITIALS
2-ILRT-6	LOCKED SHUT	5' WEST PENET ROOM, 2' BELOW 27' DECKING	
2-ILRT-2	LOCKED SHUT	5' WEST PENET ROOM, 2' BELOW 27' DECKING	

INSIDE CONTAINMENT ALIGNMENT

BLIND FLANGE	INSTALLED	BASEMENT, BEHIND WEST STAIRWELL, 20' OVERHEAD	

6.1 MECHANICAL PENETRATION CHECKS (Continued)

PENETRATION 59 SFP COOLING TO REFUELING POOL

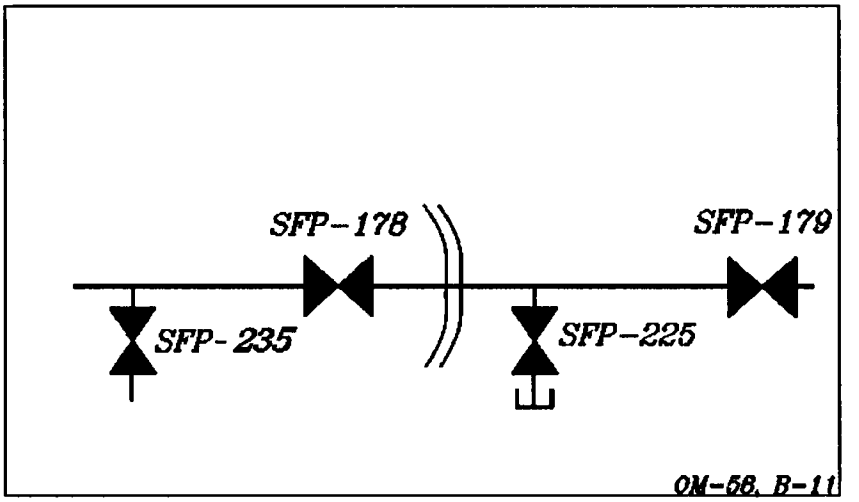

OUTSIDE CONTAINMENT ALIGNMENT

VALVE	POSITION	LOCATION	INITIALS
O-SFP-225	LOCKED SHUT	27' WEST PENET ROOM, NE CORNER,	
O-SFP-179	LOCKED SHUT	27' WEST PENET ROOM, E OF 22 CAC SRW CVs	

OR

SFP Cooling is in service with flow through this penetration.	

6.1 MECHANICAL PENETRATION CHECKS (Continued)

PENETRATION 59 SFP COOLING TO REFUELING POOL (continued)

INSIDE CONTAINMENT ALIGNMENT

VALVE	POSITION	LOCATION	INITIALS
0-SFP-178	LOCKED SHUT	WEST STAIRWELL, FIRST PLATFORM DOWN FROM 45', BEHIND CS CVs	

OR

0-SFP-235	SHUT	27 FT W DROP DOWN NEAR 0-SFP-178	
Refueling pool water level is greater than or equal to 23 ft above the top of irradiated fuel assemblies seated in the reactor vessel.			

6.1 MECHANICAL PENETRATION CHECKS (Continued)

PENETRATION 60 AUXILIARY STEAM

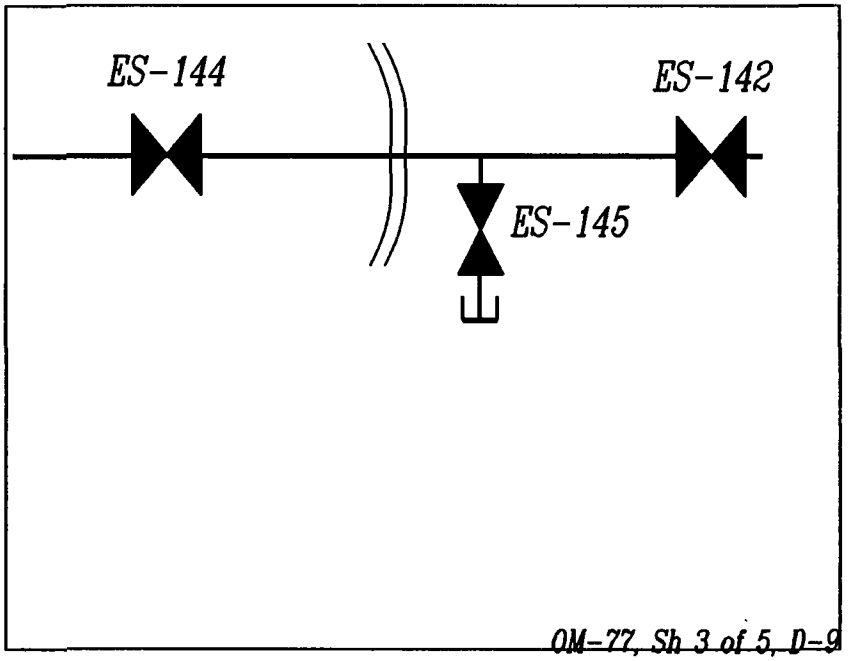

OUTSIDE CONTAINMENT ALIGNMENT

VALVE	POSITION	LOCATION	INITIALS
2-ES-145	LOCKED SHUT	27' WEST PENET ROOM, NE CORNER, NE OF STANCHION	
2-ES-142	LOCKED SHUT	27' WEST PENET ROOM, NE CORNER, E OF STANCHION	

INSIDE CONTAINMENT ALIGNMENT

2-ES-144	LOCKED SHUT	33' ELEVATION, WEST SIDE	

6.1 MECHANICAL PENETRATION CHECKS (Continued)

PENETRATION 61 SFP COOLING FROM REFUELING POOL

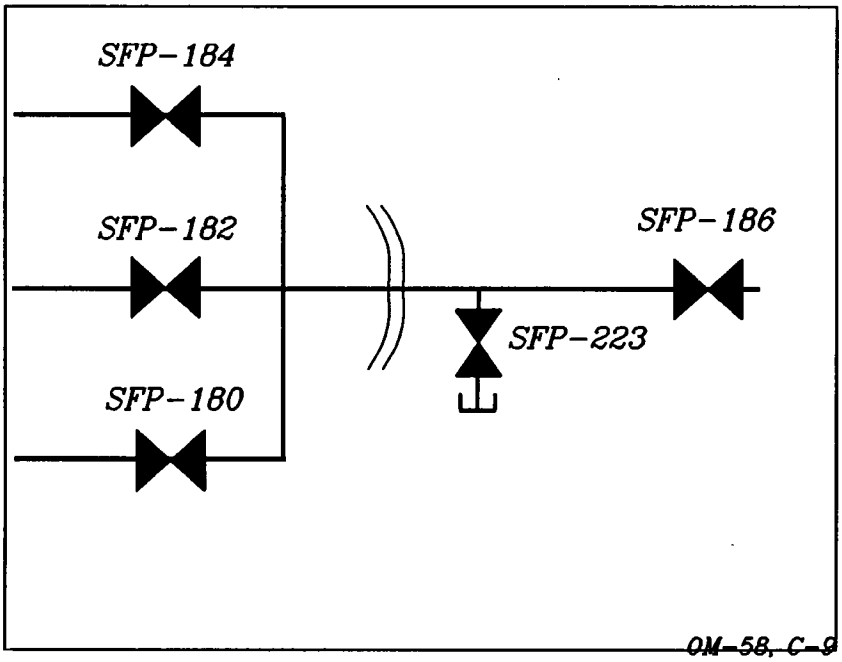

OUTSIDE CONTAINMENT ALIGNMENT

VALVE	POSITION	LOCATION	INITIALS
0-SFP-223	LOCKED SHUT	27' WEST PENET ROOM, SE CORNER, 15' OVERHEAD, TOP OF SFP CLG HEADER	
0-SFP-186	LOCKED SHUT	27' WEST PENET ROOM, NE CORNER	

OR

SFP Cooling is in service with flow through this penetration.	

6.1 MECHANICAL PENETRATION CHECKS (Continued)

PENETRATION 61 SFP COOLING FROM REFUELING POOL (continued)

INSIDE CONTAINMENT ALIGNMENT

VALVE	POSITION	LOCATION	INITIALS
0-SFP-180	LOCKED SHUT	BASEMENT, W OF RCDT, CHAIN OPERATOR	
0-SFP-182	LOCKED SHUT	BASEMENT, SW, CHAIN OPERATOR	
0-SFP-184	LOCKED SHUT	BASEMENT, SW, CHAIN OPERATOR	

OR

0-SFP-184	LOCKED SHUT	BASEMENT, SW, CHAIN OPERATOR	
Refueling pool water level is greater than or equal to 23 ft above the top of irradiated fuel assemblies seated in the reactor vessel.			

6.1 MECHANICAL PENETRATION CHECKS (Continued)

PENETRATION 23 RCDT DISCHARGE

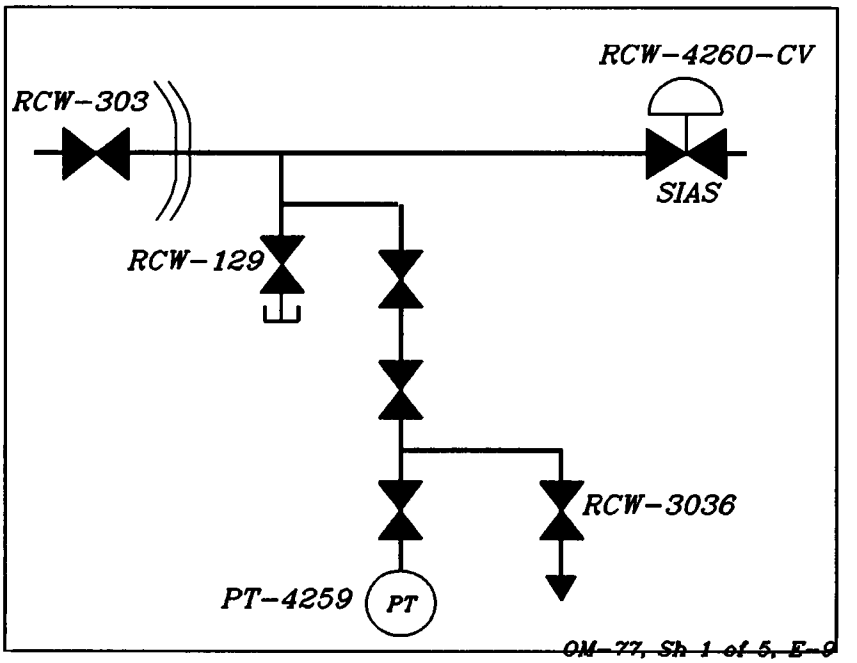

OUTSIDE CONTAINMENT ALIGNMENT

VALVE	POSITION	LOCATION	INITIALS
2-RCW-129	LOCKED SHUT	27' WEST PENET ROOM, SW 2' ABOVE RCW-4260-CV	
2-RCW-3036	LOCKED SHUT	27' HALLWAY, N OF DOOR TO 27' PENET ROOM NEAR FLOOR	
2-PT-4259	TEST CAP INSTALLED	27' PENET ROOM	
2-RCW-4260-CV	SHUT	2C10	

INSIDE CONTAINMENT ALIGNMENT

2-RCW-303	SHUT (1)	BELOW RCDT IN CNTMT BSMNT	

(1) **IF NOT** controlled by NO-1-112,
THEN LOG in the Locked Valve Deviation Log

6.1 MECHANICAL PENETRATION CHECKS (Continued)

PENETRATION 3 SAFETY INJECTION

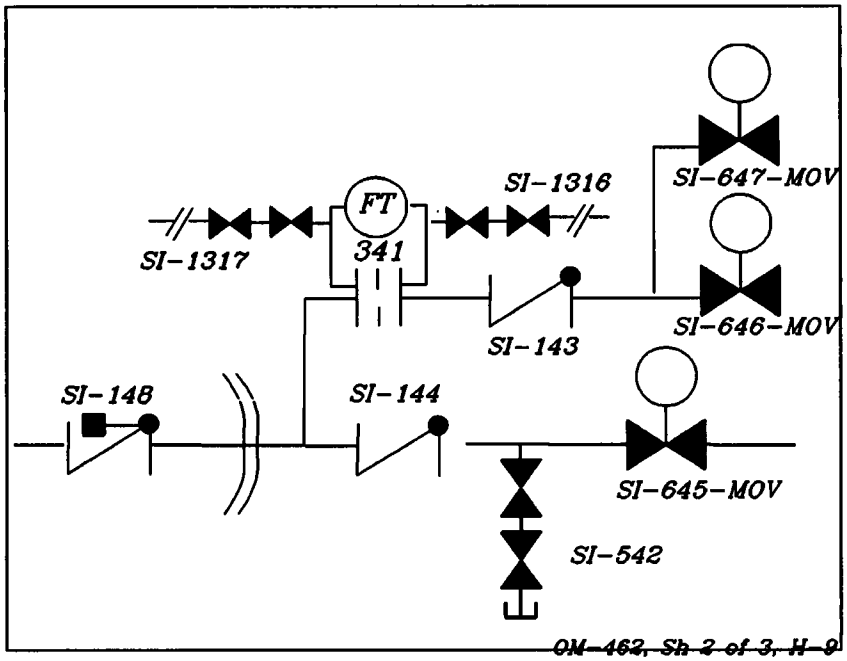

NOTE
Inside Containment Alignment is preferred to provide operational flexibility.

OUTSIDE CONTAINMENT ALIGNMENT

VALVE	POSITION	LOCATION	INITIALS
2-SI-1317	LOCKED SHUT	5' WEST PENET ROOM, ON CNTMT WALL	
2-SI-1316	LOCKED SHUT	5' WEST PENET ROOM, ON CNTMT WALL	
2-FT-341	INSTALLED	5' WEST PENET ROOM, ON CNTMT WALL	
2-SI-143	INSTALLED	27' WEST PENET ROOM	
2-SI-144	INSTALLED	27' WEST PENET ROOM	

6.1 MECHANICAL PENETRATION CHECKS (Continued)

PENETRATION 3 SAFETY INJECTION (continued)

OR

SDC is in service with flow through this penetration	

INSIDE CONTAINMENT ALIGNMENT

VALVE	POSITION	LOCATION	INITIALS
2-SI-148	INSTALLED	45' CNTMT, BELOW SIT	

6.1 MECHANICAL PENETRATION CHECKS (Continued)

PENETRATION 5 SAFETY INJECTION

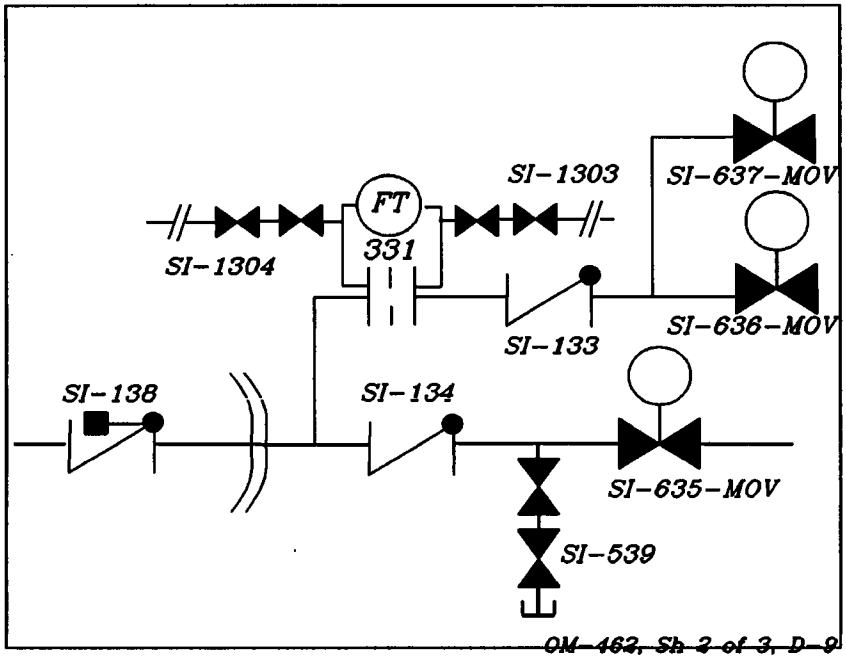

NOTE
Inside Containment Alignment is preferred to provide operational flexibility.

OUTSIDE CONTAINMENT ALIGNMENT

VALVE	POSITION	LOCATION	INITIALS
2-SI-1303	LOCKED SHUT	5' WEST PENET ROOM, ON CNTMT WALL	
2-SI-1304	LOCKED SHUT	5' WEST PENET ROOM, ON CNTMT WALL	
2-FT-331	INSTALLED	5' WEST PENET ROOM, ON CNTMT WALL	
2-SI-133	INSTALLED	27' WEST PENET ROOM	
2-SI-134	INSTALLED	27' WEST PENET ROOM	

6.1 MECHANICAL PENETRATION CHECKS (Continued)

PENETRATION 5 SAFETY INJECTION (continued)

OR

SDC is in service with flow through this penetration	

INSIDE CONTAINMENT ALIGNMENT

VALVE	POSITION	LOCATION	INITIALS
2-SI-138	INSTALLED	45' CNTMT, BELOW SIT	

6.1 MECHANICAL PENETRATION CHECKS (Continued)

PENETRATION 47A HYDROGEN SAMPLE

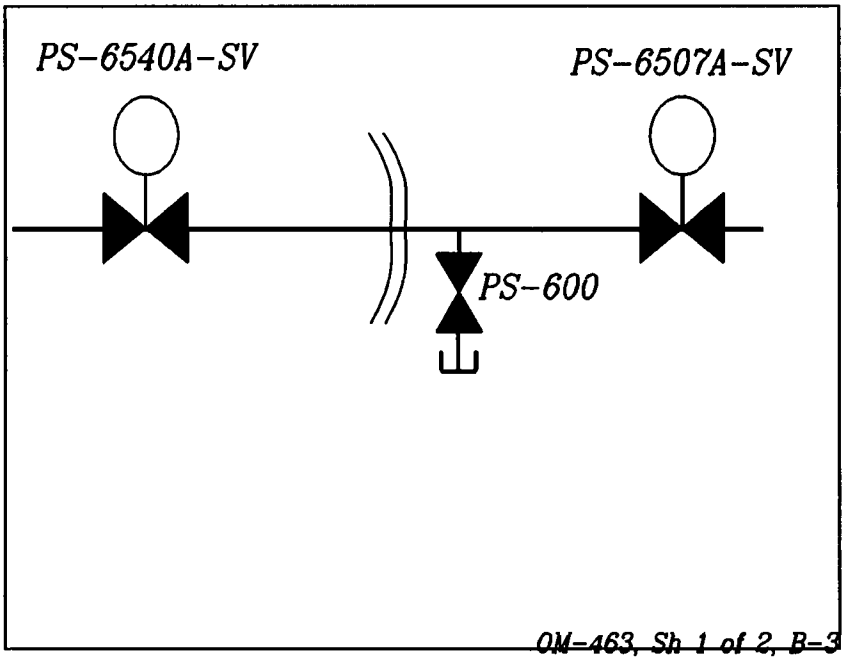

OUTSIDE CONTAINMENT ALIGNMENT

VALVE	POSITION	LOCATION	INITIALS
2-PS-600	LOCKED SHUT	5' WEST PENET ROOM, MIDDLE OF RM ON VALVE STAND	
2-PS-6507A-SV	LOCKED SHUT KEY REMOVED	1C101	

INSIDE CONTAINMENT ALIGNMENT

2-PS-6540A-SV	LOCKED SHUT KEY REMOVED	1C101	

6.1 MECHANICAL PENETRATION CHECKS (Continued)

PENETRATION 47B HYDROGEN SAMPLE

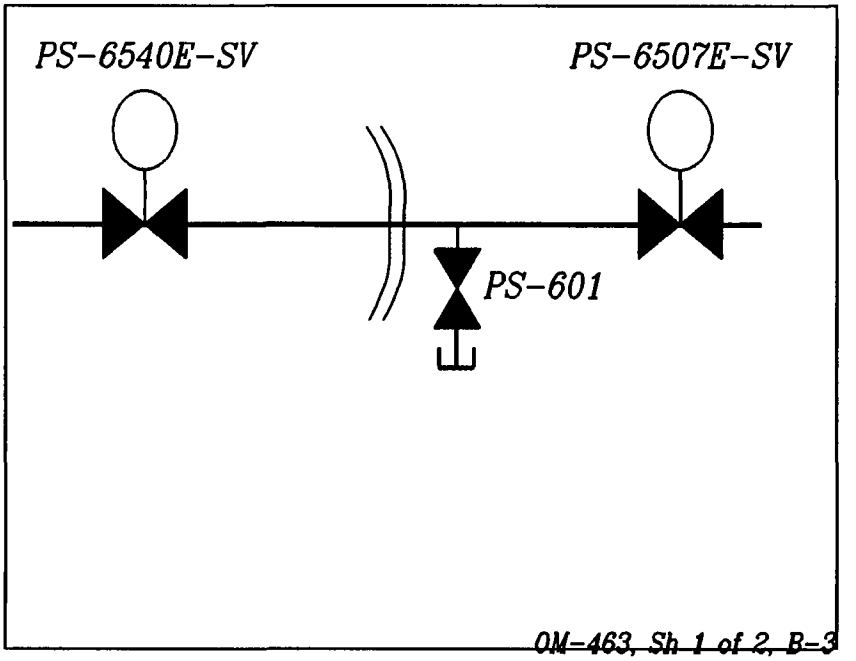

OUTSIDE CONTAINMENT ALIGNMENT

VALVE	POSITION	LOCATION	INITIALS
2-PS-601	LOCKED SHUT	5' WEST PENET ROOM, MIDDLE OF RM ON VALVE STAND	
2-PS-6507E-SV	LOCKED SHUT KEY REMOVED	1C101	

INSIDE CONTAINMENT ALIGNMENT

2-PS-6540E-SV	LOCKED SHUT KEY REMOVED	1C101	

6.1 MECHANICAL PENETRATION CHECKS (Continued)

PENETRATION 47C HYDROGEN SAMPLE

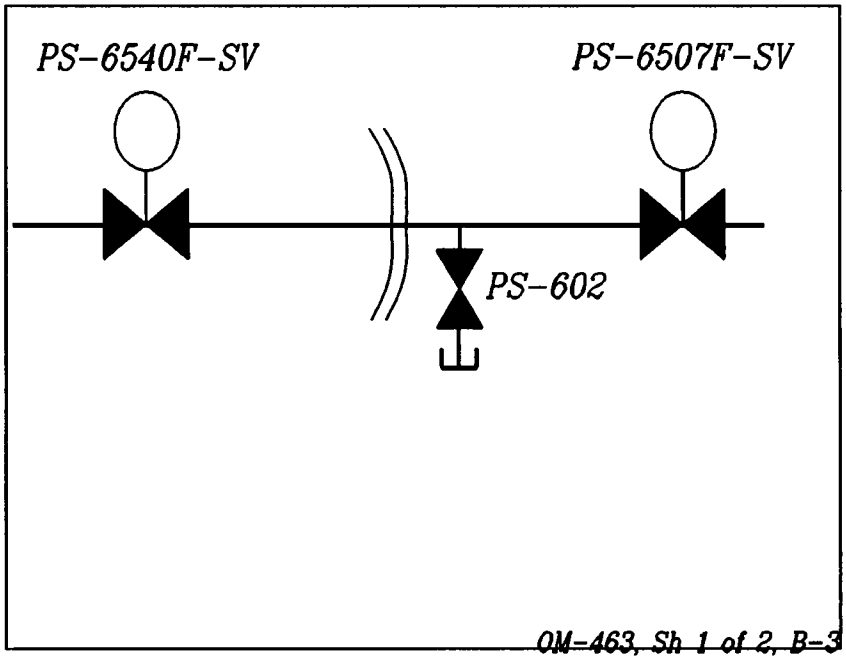

OUTSIDE CONTAINMENT ALIGNMENT

VALVE	POSITION	LOCATION	INITIALS
2-PS-602	LOCKED SHUT	5' WEST PENET ROOM, MIDDLE OF RM ON VALVE STAND	
2-PS-6507F-SV	LOCKED SHUT KEY REMOVED	1C101	

INSIDE CONTAINMENT ALIGNMENT

2-PS-6540F-SV	LOCKED SHUT KEY REMOVED	1C101	

6.1 MECHANICAL PENETRATION CHECKS (Continued)

PENETRATION 47D HYDROGEN SAMPLE

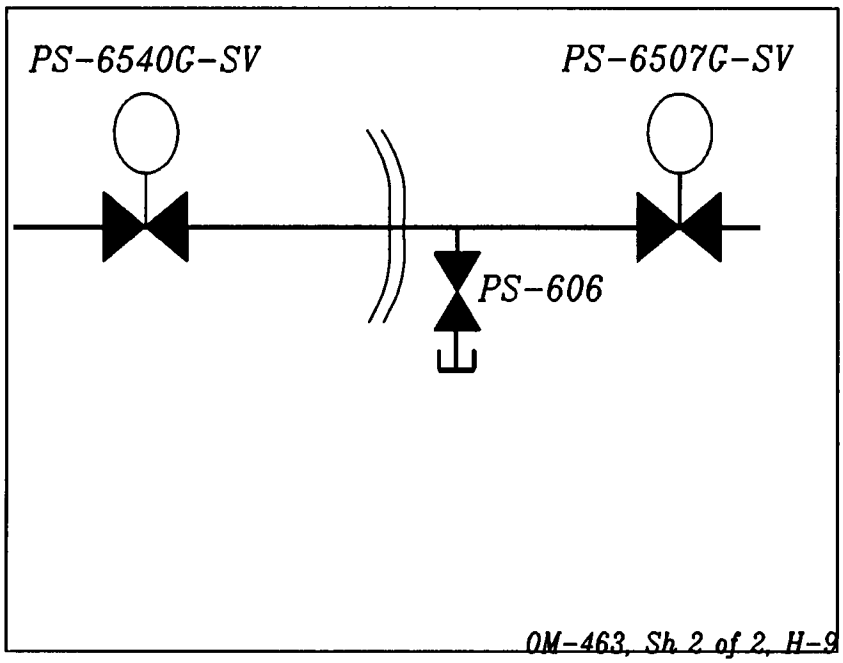

OUTSIDE CONTAINMENT ALIGNMENT

VALVE	POSITION	LOCATION	INITIALS
2-PS-606	LOCKED SHUT	5' WEST PENET ROOM, MIDDLE OF RM ON VALVE STAND	
2-PS-6507G-SV	LOCKED SHUT KEY REMOVED	1C102	

INSIDE CONTAINMENT ALIGNMENT

2-PS-6540G-SV	LOCKED SHUT KEY REMOVED	1C102	

6.1 MECHANICAL PENETRATION CHECKS (Continued)

PENETRATION 39 SIT LEAKAGE TEST

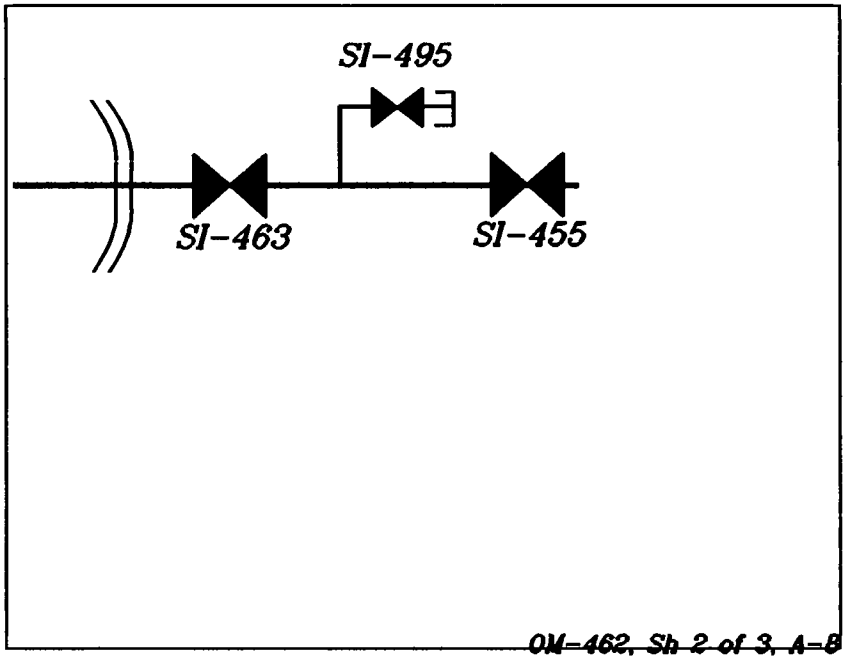

OUTSIDE CONTAINMENT ALIGNMENT

VALVE	POSITION	LOCATION	INITIALS
2-SI-463	LOCKED SHUT	27' WEST PENET ROOM, CENTER, ALONG CNTMT WALL	

OR

System is in service with flow through this penetration	

INSIDE CONTAINMENT ALIGNMENT

- - - - - - -	- - - - - - - - -	NONE - - - - - - - - - - - - -	- - - -

6.1 MECHANICAL PENETRATION CHECKS (Continued)

PENETRATION 37 PLANT SERVICE WATER

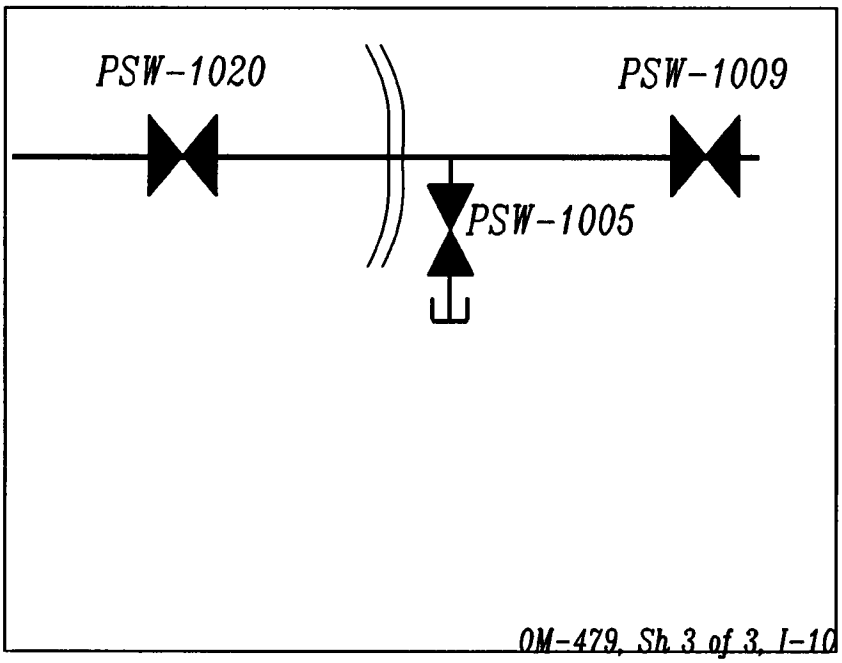

OUTSIDE CONTAINMENT ALIGNMENT

VALVE	POSITION	LOCATION	INITIALS
0-PSW-1005	LOCKED SHUT	5' WEST PENET ROOM, 4' UNDER 27' DECKING	
0-PSW-1009	LOCKED SHUT	5' WEST PENET ROOM, CHAIN OPERATOR	

INSIDE CONTAINMENT ALIGNMENT

0-PSW-1020	LOCKED SHUT	BASEMENT, W WALL, 20' OVERHEAD	

6.1 MECHANICAL PENETRATION CHECKS (Continued)

PENETRATION 9 CONTAINMENT SPRAY

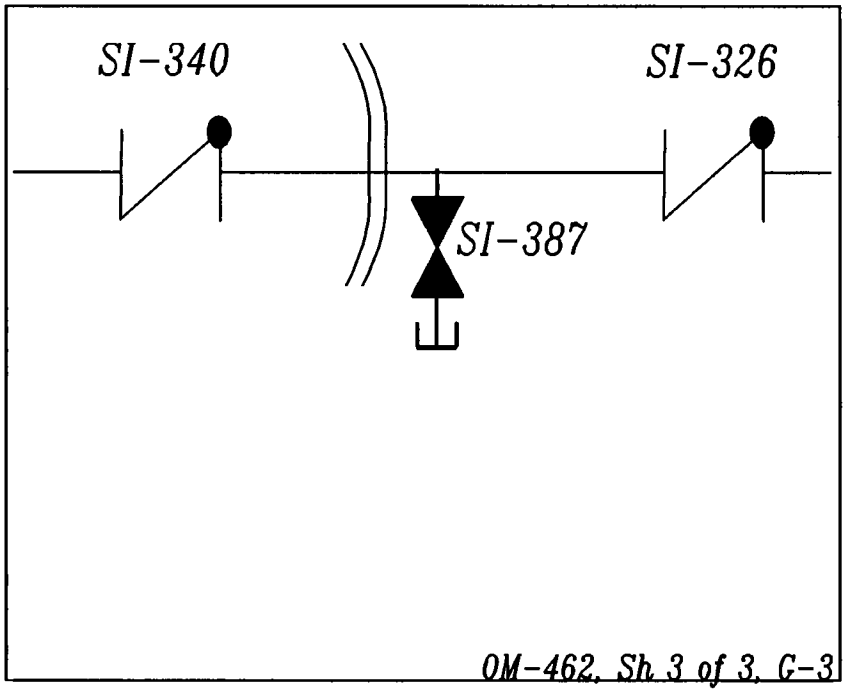

OUTSIDE CONTAINMENT ALIGNMENT

VALVE	POSITION	LOCATION	INITIALS
2-SI-387	LOCKED SHUT	27' WEST PENET ROOM, 10' OVERHEAD, ALONG CNTMT WALL	
2-SI-326	INSTALLED	27' WEST PENET ROOM	

INSIDE CONTAINMENT ALIGNMENT

2-SI-340	INSTALLED	27' CNTMT, WEST	

6.1 MECHANICAL PENETRATION CHECKS (Continued)

PENETRATION 2A CVCS LETDOWN

OUTSIDE CONTAINMENT

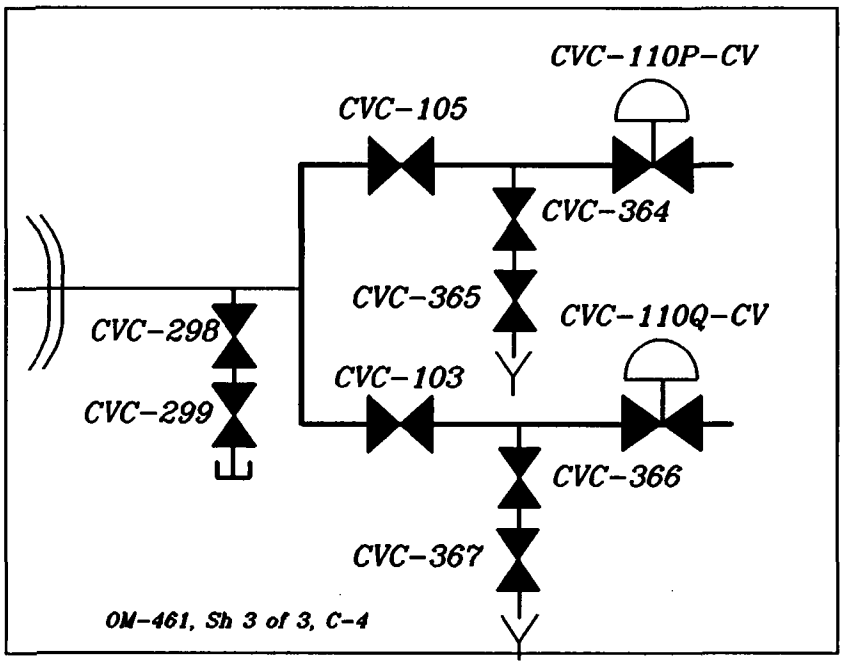

OUTSIDE CONTAINMENT ALIGNMENT

VALVE	POSITION	LOCATION	INITIALS
2-CVC-299	LOCKED SHUT	27' WEST PENET ROOM, S OF STANCHION IN CENTER OF ROOM	
2-CVC-298	LOCKED SHUT	27' WEST PENET ROOM, S OF STANCHION IN CENTER OF ROOM	
2-CVC-105	SHUT (1)	LETDOWN HX ROOM (CHAIN OPER. OUTSIDE ROOM	
2-CVC-103	SHUT (1)	LETDOWN HX ROOM (CHAIN OPER. OUTSIDE ROOM	

(1) IF NOT controlled by NO-1-112,
THEN LOG in the Locked Valve Deviation Log

6.1 MECHANICAL PENETRATION CHECKS (Continued)

PENETRATION 2A CVCS LETDOWN (continued)

INSIDE CONTAINMENT

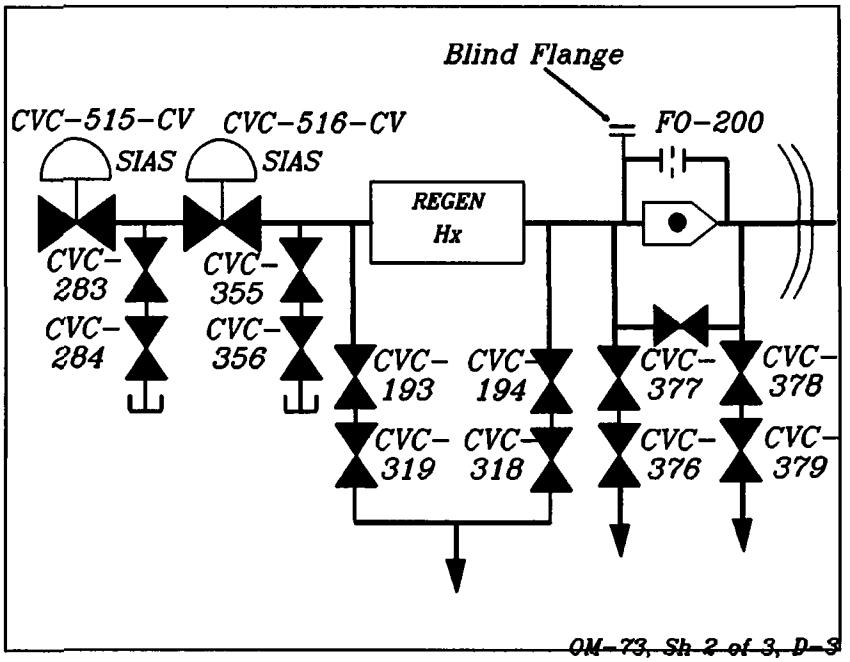

INSIDE CONTAINMENT ALIGNMENT

VALVE	POSITION	LOCATION	INITIALS
2-CVC-379	LOCKED SHUT	10' N OF W STAIRS, OVERHEAD	
2-CVC-378	LOCKED SHUT	10' N OF W STAIRS, OVERHEAD	
2-CVC-376	LOCKED SHUT	10' N OF W STAIRS, OVERHEAD	
2-CVC-377	LOCKED SHUT	10' N OF W STAIRS, OVERHEAD	
2-CVC-318	LOCKED SHUT	UNDER REGEN HX	
2-CVC-194	LOCKED SHUT	UNDER REGEN HX	
2-CVC-319	LOCKED SHUT	UNDER REGEN HX	
2-CVC-193	LOCKED SHUT	UNDER REGEN HX	

6.1 MECHANICAL PENETRATION CHECKS (Continued)

PENETRATION 2A CVCS LETDOWN (continued)

INSIDE CONTAINMENT ALIGNMENT
(continued)

VALVE	POSITION	LOCATION	INITIALS
2-CVC-356	LOCKED SHUT	UNDER REGEN HX	
2-CVC-355	LOCKED SHUT	UNDER REGEN HX	
2-FO-200 BLIND FLANGE	INSTALLED	10' CNTMT, 22 PUMP BAY	

AND

2-CVC-516-CV	SHUT (1)	2C07	

OR

2-CVC-284	LOCKED SHUT	22 PUMP BAY, BETWEEN CVC-515-CV AND CVC-516-CV	
2-CVC-283	LOCKED SHUT	22 PUMP BAY, BETWEEN CVC-515-CV AND CVC-516-CV	
2-CVC-515-CV	SHUT (1)	2C07	

(1) IF NOT controlled by NO-1-112,
THEN LOG in the Locked Valve Deviation Log

6.1 MECHANICAL PENETRATION CHECKS (Continued)

PENETRATION 2B CVCS CHARGING

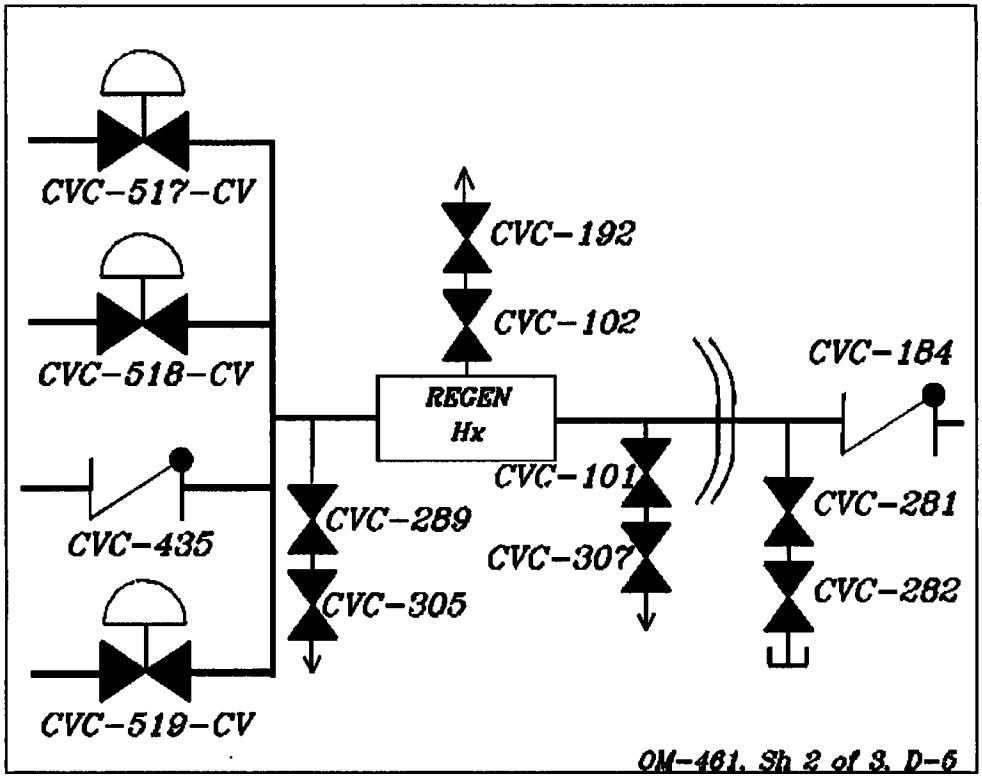

NOTE
Outside Containment Alignment is preferred to provide operational flexibility.

OUTSIDE CONTAINMENT ALIGNMENT

VALVE	POSITION	LOCATION	INITIALS
2-CVC-184	INSTALLED	27' WEST PENET ROOM, MIDDLE OF ROOM	
2-CVC-282	LOCKED SHUT	27' WEST PENET ROOM, MIDDLE OF ROOM, AT STANCHION	
2-CVC-281	LOCKED SHUT	27' WEST PENET ROOM, MIDDLE OF ROOM, AT STANCHION	

6.1 MECHANICAL PENETRATION CHECKS (Continued)

PENETRATION 2B CVCS CHARGING (continued)

INSIDE CONTAINMENT ALIGNMENT

VALVE	POSITION	LOCATION	INITIALS
2-CVC-192	LOCKED SHUT	22 PUMP BAY, 48' PLATFORM ON TOP OF REGEN HX	
2-CVC-102	LOCKED SHUT	22 PUMP BAY, 48' PLATFORM ON TOP OF REGEN HX	
2-CVC-307	LOCKED SHUT	22 PUMP BAY, BETWEEN CVC-516-CV **AND** REGEN HX	
2-CVC-101	LOCKED SHUT	22 PUMP BAY, BETWEEN CVC-516-CV **AND** REGEN HX	
2-CVC-305	LOCKED SHUT	22 PUMP BAY, SE OF REGEN HX	
2-CVC-289	LOCKED SHUT	22 PUMP BAY, SE OF REGEN HX	
2-CVC-435	INSTALLED	45' WEST. BY REFUELING TUBE AT 2-CVC-519-CV	
2-CVC-517-CV	SHUT (1)	2C07	
2-CVC-518-CV	SHUT (1)	2C07	
2-CVC-519-CV	SHUT (1)	2C07	

(1) **IF NOT** controlled by NO-1-112,
THEN LOG in the Locked Valve Deviation Log

6.1 MECHANICAL PENETRATION CHECKS (Continued)

PENETRATION 49A HYDROGEN SAMPLE

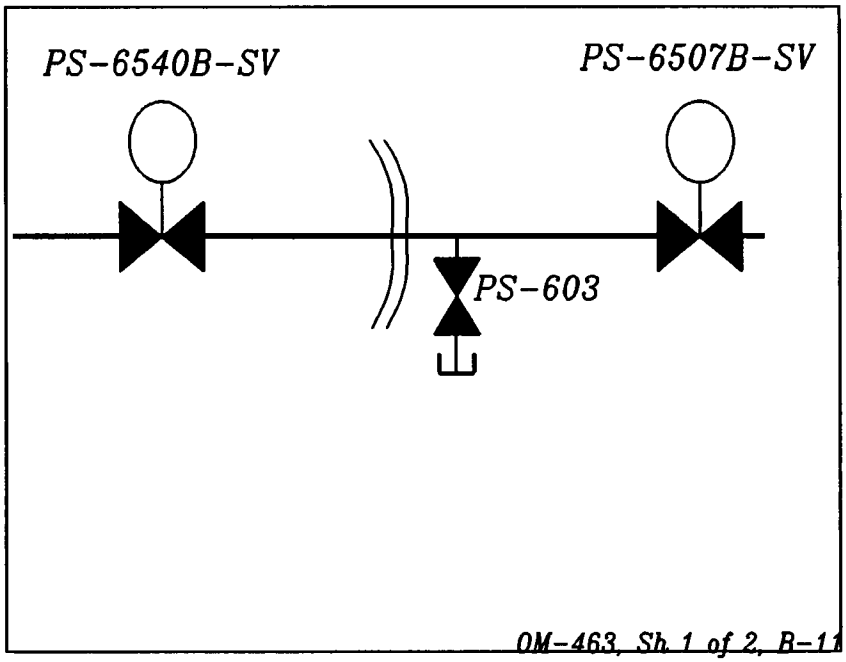

OUTSIDE CONTAINMENT ALIGNMENT

VALVE	POSITION	LOCATION	INITIALS
2-PS-6507B-SV	LOCKED SHUT KEY REMOVED	1C102	
2-PS-603	LOCKED SHUT	5' WEST PENET ROOM, MIDDLE OF ROOM, ON VLV STAND	

INSIDE CONTAINMENT ALIGNMENT

2-PS-6540B-SV	LOCKED SHUT KEY REMOVED	1C102	

6.1 MECHANICAL PENETRATION CHECKS (Continued)

PENETRATION 49B HYDROGEN SAMPLE

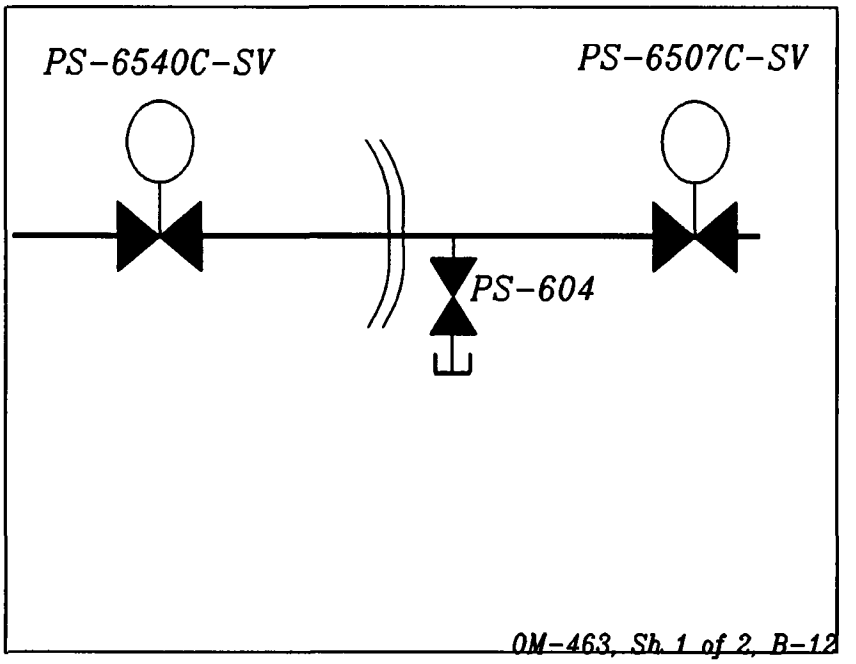

OUTSIDE CONTAINMENT ALIGNMENT

VALVE	POSITION	LOCATION	INITIALS
2-PS-6507C-SV	LOCKED SHUT KEY REMOVED	1C102	
2-PS-604	LOCKED SHUT	5' WEST PENET ROOM, MIDDLE OF ROOM, ON VLV STAND	

INSIDE CONTAINMENT ALIGNMENT

2-PS-6540C-SV	LOCKED SHUT KEY REMOVED	1C102	

6.1 MECHANICAL PENETRATION CHECKS (Continued)

PENETRATION 49C HYDROGEN SAMPLE

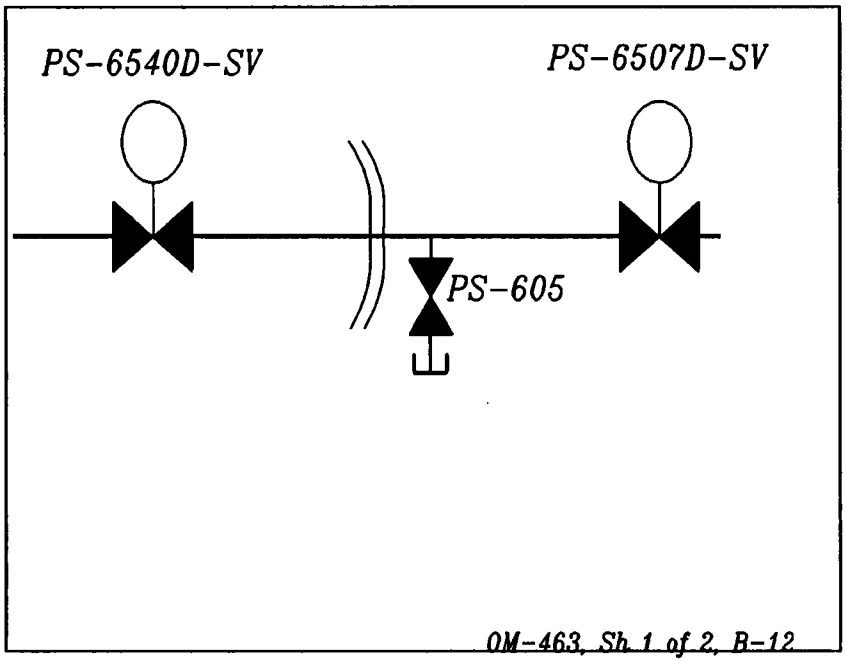

OUTSIDE CONTAINMENT ALIGNMENT

VALVE	POSITION	LOCATION	INITIALS
2-PS-6507D-SV	LOCKED SHUT KEY REMOVED	1C102	
2-PS-605	LOCKED SHUT	5' WEST PENET ROOM, MIDDLE OF ROOM, ON VLV STAND	

INSIDE CONTAINMENT ALIGNMENT

2-PS-6540D-SV	LOCKED SHUT KEY REMOVED	1C102	

6.1 MECHANICAL PENETRATION CHECKS (Continued)

PENETRATION 28 22 CONTAINMENT COOLER SRW SUPPLY

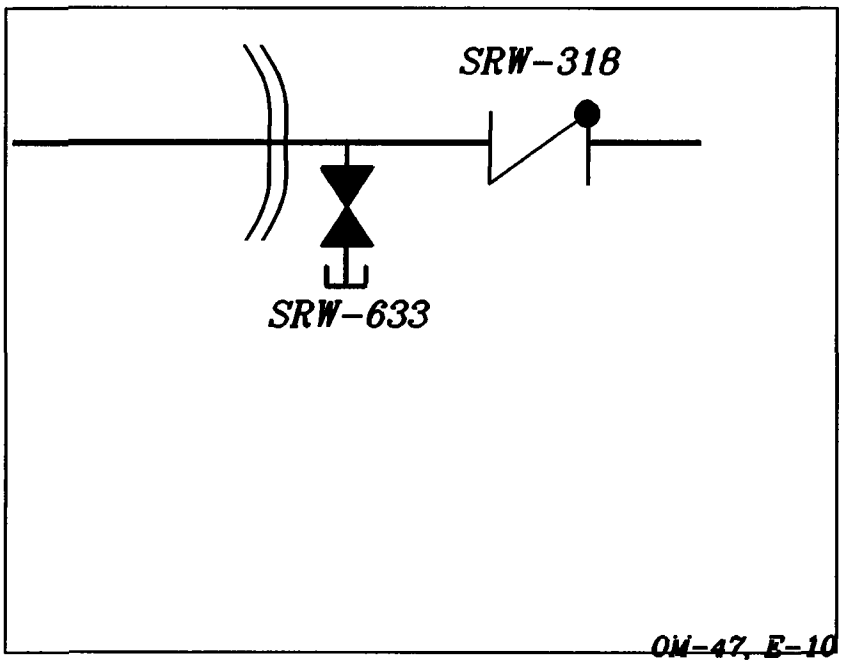

NOTE
Outside Containment Alignment is preferred to provide operational flexibility.

OUTSIDE CONTAINMENT ALIGNMENT

VALVE	POSITION	LOCATION	INITIALS
2-SRW-318	INSTALLED	5' WEST PENET ROOM, SOUTH CORNER	
2-SRW-633	LOCKED SHUT	5' WEST PENET ROOM, SOUTH CORNER	

OR

SRW is in service with flow through this penetration.	

6.1 MECHANICAL PENETRATION CHECKS (Continued)

PENETRATION 28 22 CONTAINMENT COOLER SRW SUPPLY (continued)

INSIDE CONTAINMENT ALIGNMENT

- - - - - - -	- - - - - - - - -	NONE - - - - - - - - - - - - -	- - - - -

6.1 MECHANICAL PENETRATION CHECKS (Continued)

PENETRATION 32 22 CONTAINMENT COOLER SRW RETURN

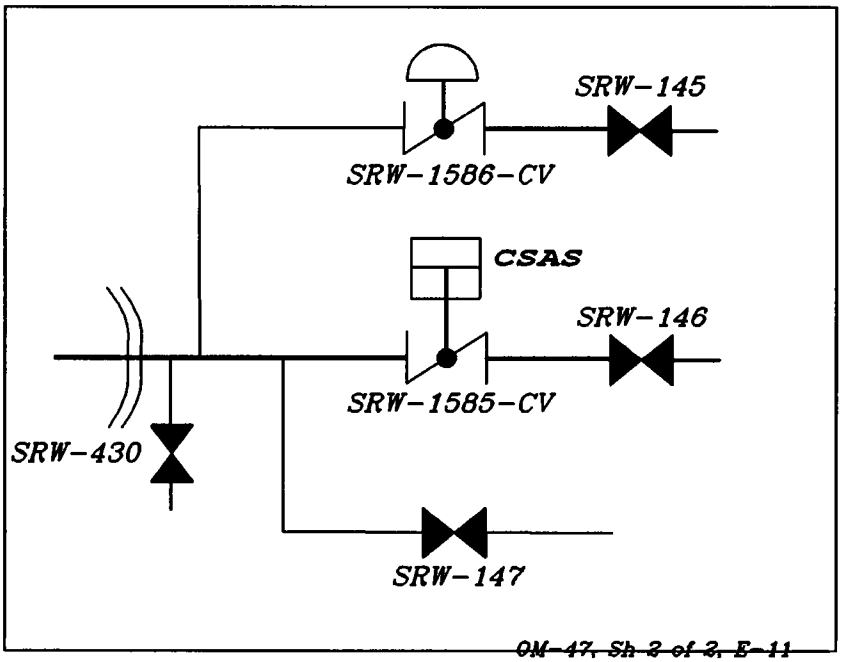

OUTSIDE CONTAINMENT ALIGNMENT

VALVE	POSITION	LOCATION	INITIALS
2-SRW-430	LOCKED SHUT	27' WEST PENET, SE, 10' O/H	
2-SRW-147	LOCKED SHUT	27' WEST PENET ROOM	
2-SRW-145	SHUT (1)	27' WEST PENET ROOM	
2-SRW-146	SHUT (1)	27' WEST PENET ROOM	
2-SRW-1585-CV	INSTALLED	27' WEST PENET ROOM	
2-SRW-1586-CV	INSTALLED	27' WEST PENET ROOM	

(1) **IF NOT** controlled by NO-1-112,
THEN LOG in the Locked Valve Deviation Log

OR

SRW is in service with flow through this penetration.	

6.1 MECHANICAL PENETRATION CHECKS (Continued)

PENETRATION 32 22 CONTAINMENT COOLER SRW RETURN (continued)

INSIDE CONTAINMENT ALIGNMENT

- - - - - - -	- - - - - - - - -	NONE - - - - - - - - - - - - -	- - - - -

6.1 MECHANICAL PENETRATION CHECKS (Continued)

PENETRATION 27 24 CONTAINMENT COOLER SRW SUPPLY

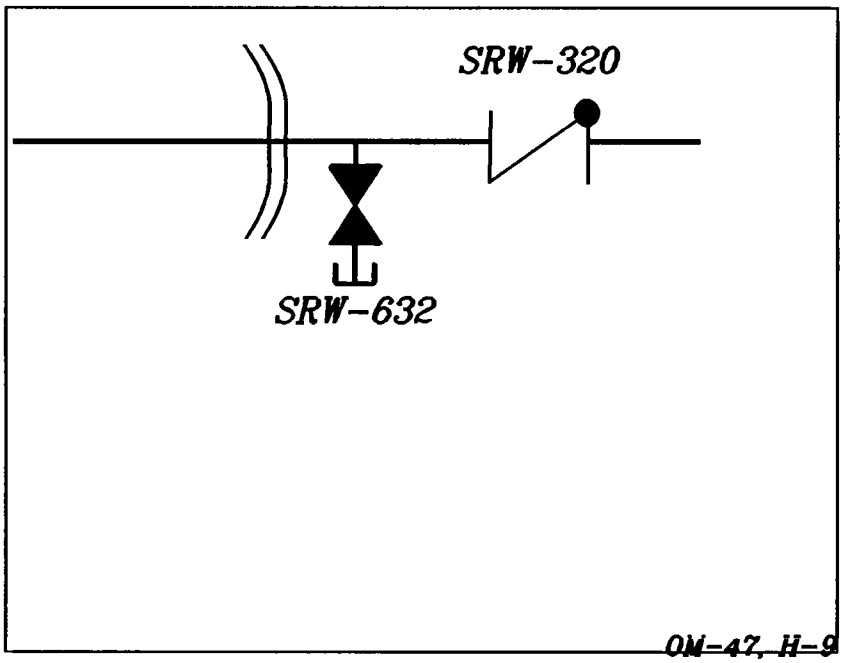

NOTE
Outside Containment Alignment is preferred to provide operational flexibility.

OUTSIDE CONTAINMENT ALIGNMENT

VALVE	POSITION	LOCATION	INITIALS
2-SRW-320	INSTALLED	5' WEST PENET ROOM, SOUTH	
2-SRW-632	LOCKED SHUT	5' WEST PENET ROOM, SOUTH	

OR

SRW is in service with flow through this penetration.	

INSIDE CONTAINMENT ALIGNMENT

- - - - - - -	- - - - - - - - -	NONE - - - - - - - - - - - - -	- - - -

6.1 MECHANICAL PENETRATION CHECKS (Continued)

PENETRATION 31 24 CONTAINMENT COOLER SRW RETURN

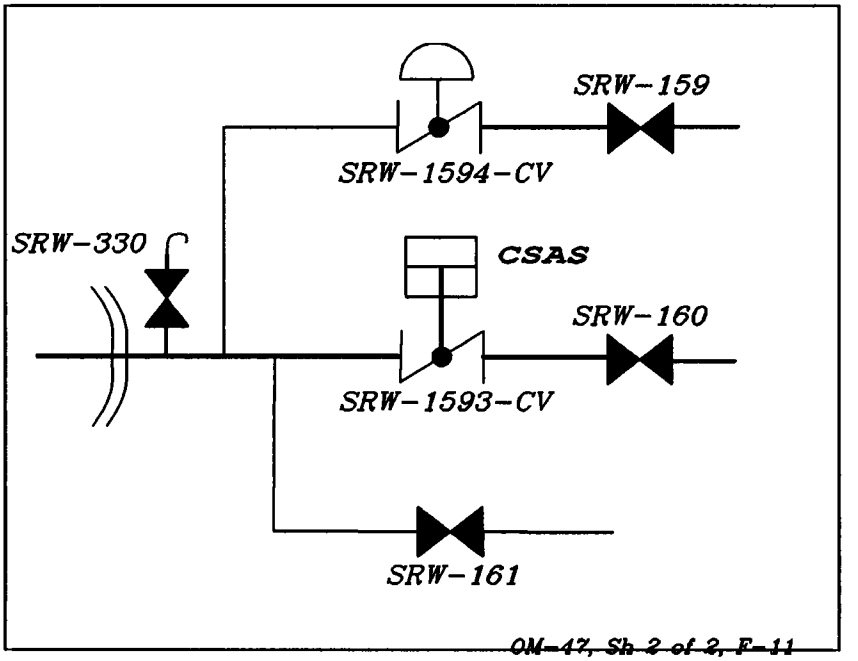

OUTSIDE CONTAINMENT ALIGNMENT

VALVE	POSITION	LOCATION	INITIALS
2-SRW-330	LOCKED SHUT	27' WEST PENET ROOM, W WALL	
2-SRW-161	LOCKED SHUT	27' WEST PENET ROOM, W WALL	
2-SRW-159	SHUT (1)	27' WEST PENET ROOM, W WALL	
2-SRW-160	SHUT (1)	27' WEST PENET ROOM, W WALL	
2-SRW-1593-CV	INSTALLED	27' WEST PENET ROOM, W WALL	
2-SRW-1594-CV	INSTALLED	27' WEST PENET ROOM, W WALL	

(1) **IF NOT** controlled by NO-1-112,
THEN LOG in the Locked Valve Deviation Log

OR

SRW is in service with flow through this penetration.	

6.1 MECHANICAL PENETRATION CHECKS (Continued)

PENETRATION 31 24 CONTAINMENT COOLER SRW RETURN (continued)

INSIDE CONTAINMENT ALIGNMENT

- - - - - - -	- - - - - - - - -	NONE - - - - - - - - - - - - -	- - - - -

6.1 MECHANICAL PENETRATION CHECKS (Continued)

27' EAST PENETRATION ROOM

(VIEW FROM OUTSIDE CONTAINMENT - NORTH END)

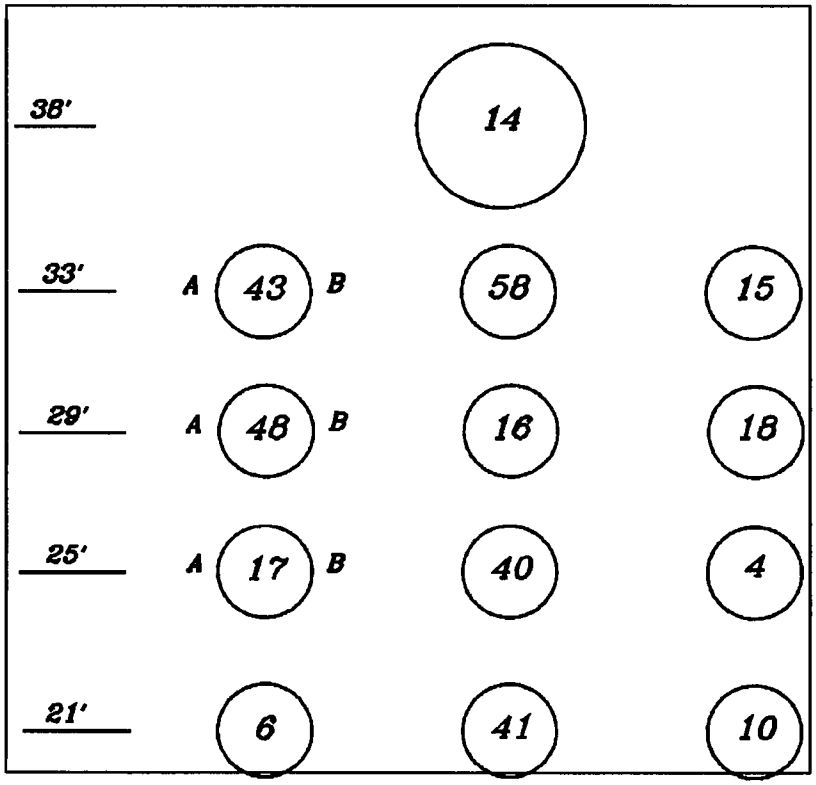

	14 - CNTMT PURGE	
43 - 21 SG BLOWDOWN	58 - SPARE	15 - CNTMT ATMOS RMS
48 - H_2 PURGE	16 - COMPONENT COOLING	18 - COMPONENT COOLING
17- 22 SG BLOWDOWN	40 - SPARE	4 - SAFETY INJECTION
6 - SAFETY INJECTION	41 - SHUTDOWN COOLING	10 - CONTAINMENT SPRAY

6.1 MECHANICAL PENETRATION CHECKS (Continued)

PENETRATION 15 CONTAINMENT ATMOSPHERE RMS

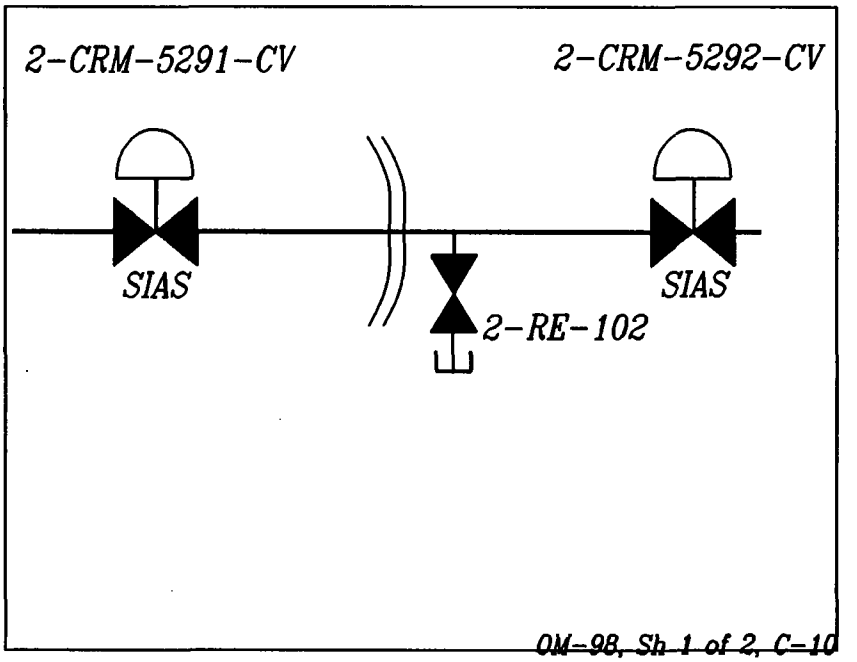

OUTSIDE CONTAINMENT ALIGNMENT

VALVE	POSITION	LOCATION	INITIALS
2-RE-102	LOCKED SHUT	27' EAST PENET ROOM, NW CORNER	
2-CRM-5292-CV	SHUT	2C10	

INSIDE CONTAINMENT ALIGNMENT

2-CRM-5291-CV	SHUT	2C10	

6.1 MECHANICAL PENETRATION CHECKS (Continued)

PENETRATION 18 COMPONENT COOLING RETURN

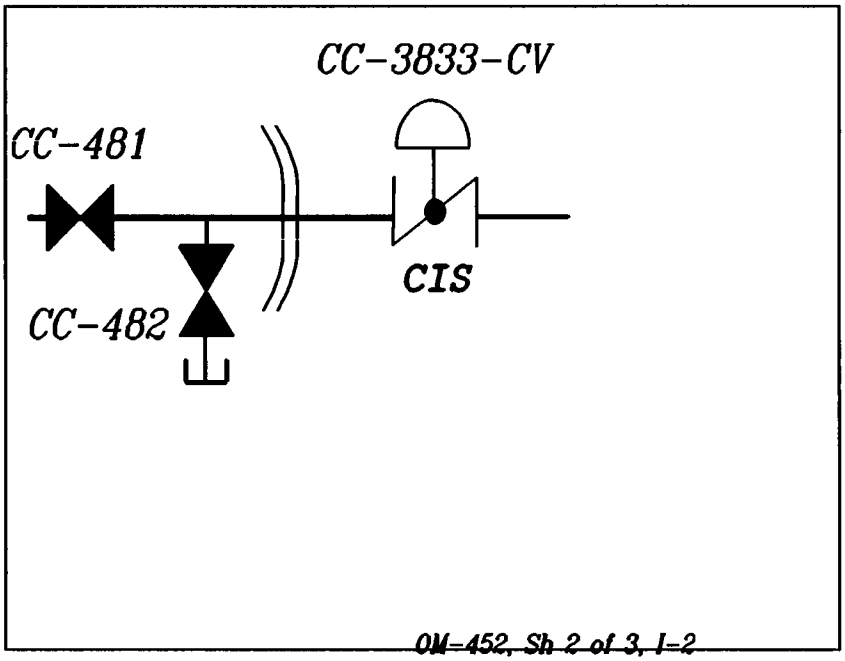

OUTSIDE CONTAINMENT ALIGNMENT

VALVE	POSITION	LOCATION	INITIALS
2-CC-3833-CV	SHUT (1)	2C10	

OR

CC is in service with flow through this penetration	

INSIDE CONTAINMENT ALIGNMENT

2-CC-482	LOCKED SHUT	BASEMENT, 30' ABOVE SG RECIRC RIG	
2-CC-481	SHUT (1)	BASEMENT, 30' ABOVE SG RECIRC RIG	

(1) IF NOT controlled by NO-1-112,
THEN LOG in the Locked Valve Deviation Log

6.1 MECHANICAL PENETRATION CHECKS (Continued)

PENETRATION 10 CONTAINMENT SPRAY

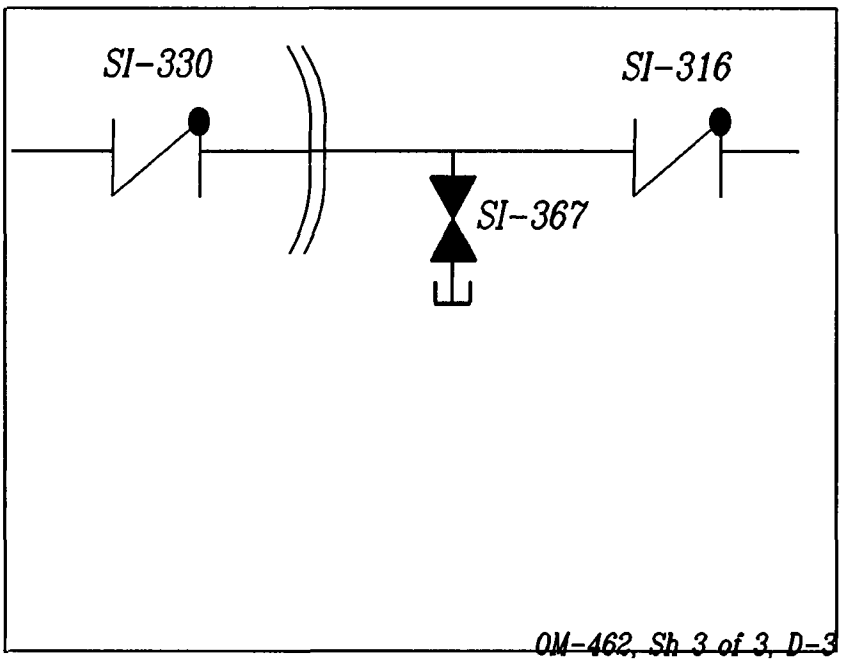

OUTSIDE CONTAINMENT ALIGNMENT

VALVE	POSITION	LOCATION	INITIALS
2-SI-367	LOCKED SHUT	5' EAST PENET ROOM, NW CORNER	
2-SI-316	INSTALLED	5' EAST PENET ROOM, NW CORNER	

INSIDE CONTAINMENT ALIGNMENT

2-SI-330	INSTALLED	37' CNTMT, EAST	

6.1 MECHANICAL PENETRATION CHECKS (Continued)

PENETRATION 14 CONTAINMENT PURGE EXHAUST

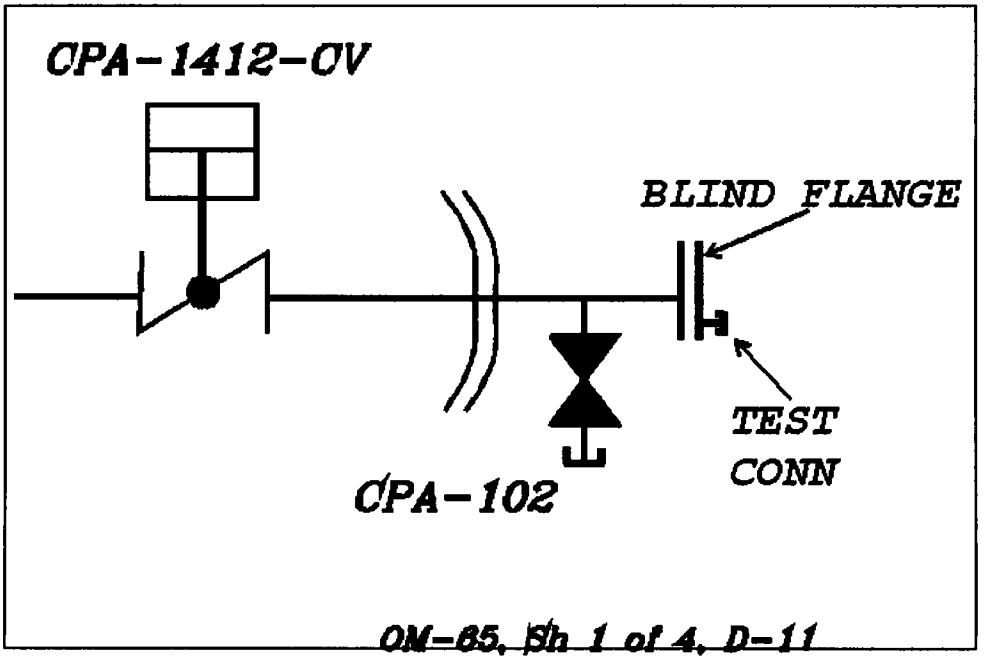

CONTAINMENT ALIGNMENT

VALVE	POSITION	LOCATION	INITIALS
2-CPA-1412-CV	SHUT/OPEN*	2C10	

* 2-CPA-1412-CV may be open during movement of irradiated fuel assemblies within containment, IF CRS A is operable, OR IF NO-1-114 controls are in place, AND capable of being shut. (Circle position PER TS 3.9.3 OR NO-1-114)

6.1 MECHANICAL PENETRATION CHECKS (Continued)

PENETRATION 14 CONTAINMENT PURGE EXHAUST (continued)

OR

VALVE	POSITION	LOCATION	INITIALS
2-CPA-102	LOCKED SHUT	27' EAST PENET ROOM, NW CORNER, 10' OVERHEAD S SIDE OF PIPE	
BLIND FLANGE	INSTALLED*	27' EAST PENET ROOM, N. END	
FLANGE TEST CONNECTION	CAPPED	27' EAST PENET ROOM, N. END	

* Every other bolt may be removed.

6.1 MECHANICAL PENETRATION CHECKS (Continued)

PENETRATION 16 COMPONENT COOLING SUPPLY

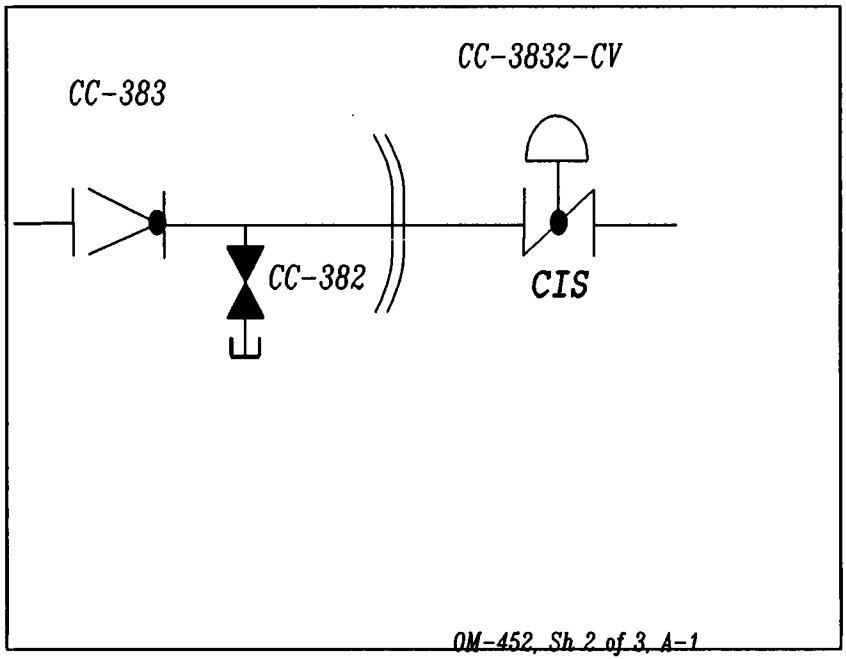

NOTE
Inside Containment Alignment is preferred to provide operational flexibility.

OUTSIDE CONTAINMENT ALIGNMENT

VALVE	POSITION	LOCATION	INITIALS
2-CC-3832-CV	SHUT (1)	2C10	

(1) **IF NOT** controlled by NO-1-112,
THEN LOG in the Locked Valve Deviation Log

OR

CC is in service with flow through this penetration	

6.1 MECHANICAL PENETRATION CHECKS (Continued)

PENETRATION 16 COMPONENT COOLING SUPPLY (continued)

INSIDE CONTAINMENT ALIGNMENT

2-CC-383	INSTALLED	27' CNTMT E STAIRS	
2-CC 382	LOCKED SHUT	27' CNTMT E STAIRS	

6.1 MECHANICAL PENETRATION CHECKS (Continued)

PENETRATION 41 SHUTDOWN COOLING

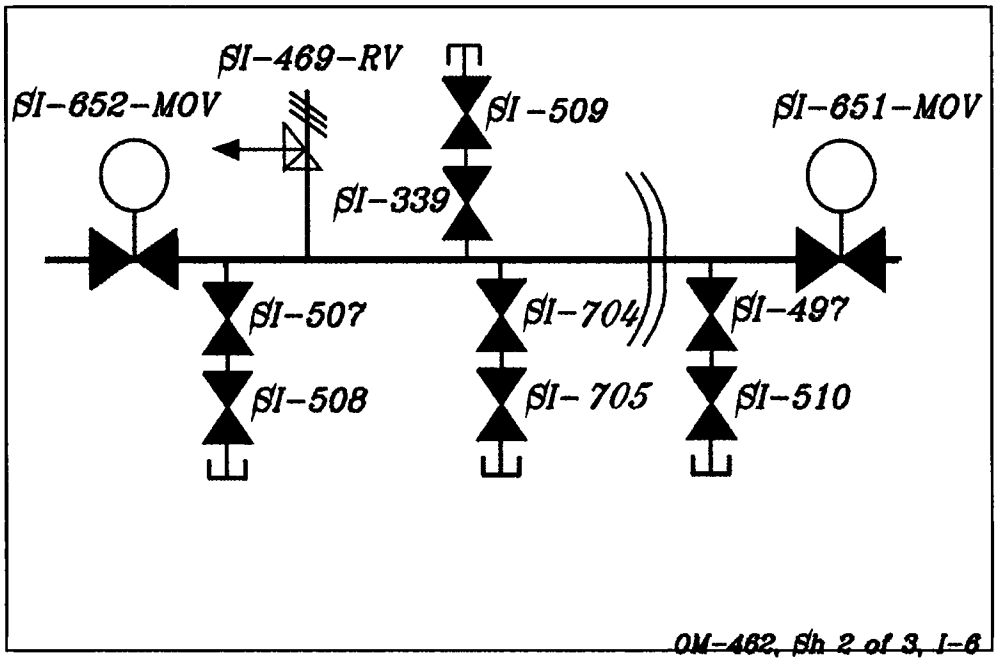

OUTSIDE CONTAINMENT ALIGNMENT

VALVE	POSITION	LOCATION	INITIALS
2-SI-510	LOCKED SHUT	27' EAST PENET ROOM, 1' UNDER DECK, W OF 2-SI-651-MOV	
2-SI-497	LOCKED SHUT	27' EAST PENET ROOM, 1' UNDER DECK, W OF 2-SI-651-MOV	
2-SI-651-MOV	LOCKED SHUT KEY REMOVED	2C09	

OR

SDC is in service with flow through this penetration	

6.1 MECHANICAL PENETRATION CHECKS (Continued)

PENETRATION 41 SHUTDOWN COOLING (continued)

INSIDE CONTAINMENT ALIGNMENT

VALVE	POSITION	LOCATION	INITIALS
2-SI-509	LOCKED SHUT	25' CNTMT, E SIDE OF N STAIRWAY	
2-SI-339	LOCKED SHUT	27' CNTMT, E SIDE OF N STAIRWAY	
2-SI-508	LOCKED SHUT	10' CNTMT N SIDE	
2-SI-507	LOCKED SHUT	10' CNTMT N SIDE	
2-SI-704	LOCKED SHUT	CNTMT SW BY PENETRATION	
2-SI-705	LOCKED SHUT **AND** CAPPED	CNTMT SW BY PENETRATION	
2-SI-469-RV	INSTALLED	BASEMENT, SE, 30' OVERHEAD	
2-SI-652-MOV	LOCKED SHUT KEY REMOVED	2C09	

6.1 MECHANICAL PENETRATION CHECKS (Continued)

PENETRATION 48A HYDROGEN PURGE

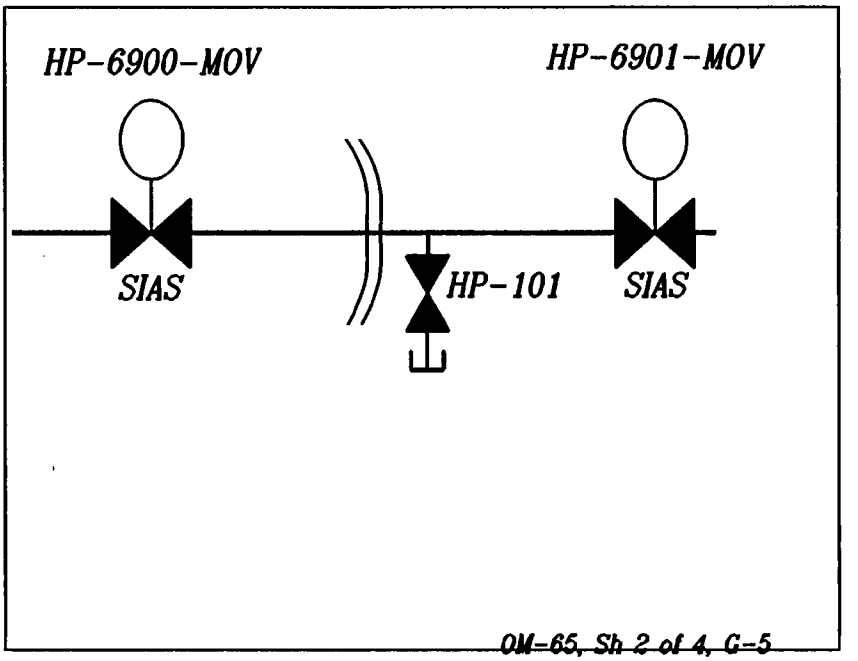

NOTE

- **Both** 2-HP-6900-MOV and 2-HP-6901-MOV are required to be shut to comply with TS 3.9.3. **[B0306]**
- Other verifications only require that 2-HP-6901-MOV **AND** 2-HP-101, **OR** 2-HP-6900-MOV, be verified. The valves **OR** valve not verified may be N/A'd.

CONTAINMENT ALIGNMENT

VALVE	POSITION	LOCATION	INITIALS
2-HP-6901-MOV	LOCKED SHUT KEY REMOVED	2C10	
2-HP-6900-MOV	LOCKED SHUT KEY REMOVED	2C10	
2-HP-101	LOCKED SHUT	27' EAST PENET ROOM, SW CORNER, 18" FROM CNTMT	

6.1 MECHANICAL PENETRATION CHECKS (Continued)

PENETRATION 48B HYDROGEN PURGE SUPPLY

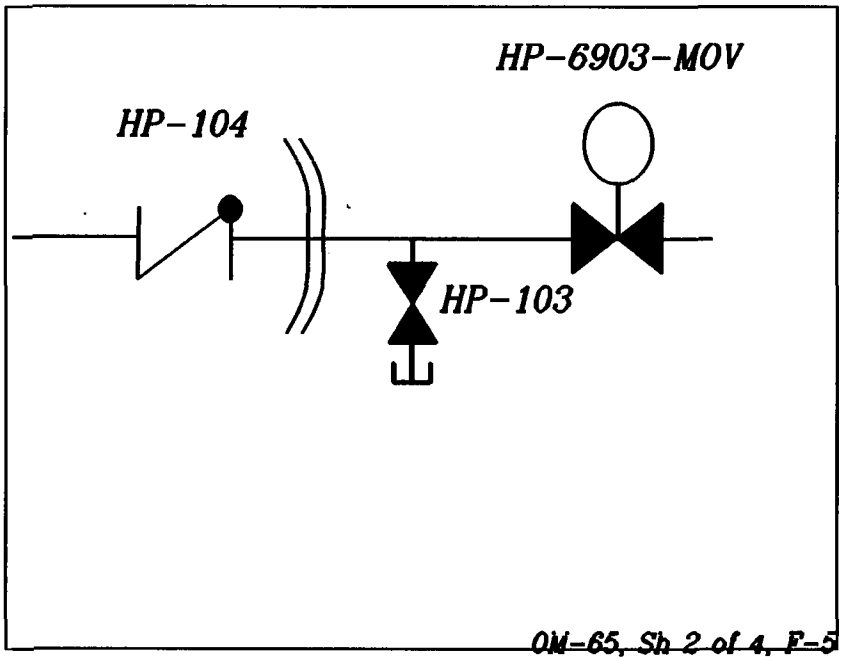

NOTE
Inside Containment Alignment is preferred to provide operational flexibility.

OUTSIDE CONTAINMENT ALIGNMENT

VALVE	POSITION	LOCATION	INITIALS
2-HP-103	LOCKED SHUT	27' EAST PENET ROOM, UNDER HP-6901	
2-HP-6903-MOV	LOCKED SHUT KEY REMOVED	2C100	

INSIDE CONTAINMENT ALIGNMENT

2-HP-104	INSTALLED	N OF E STAIRS	

6.1 MECHANICAL PENETRATION CHECKS (Continued)

PENETRATION 4 SAFETY INJECTION

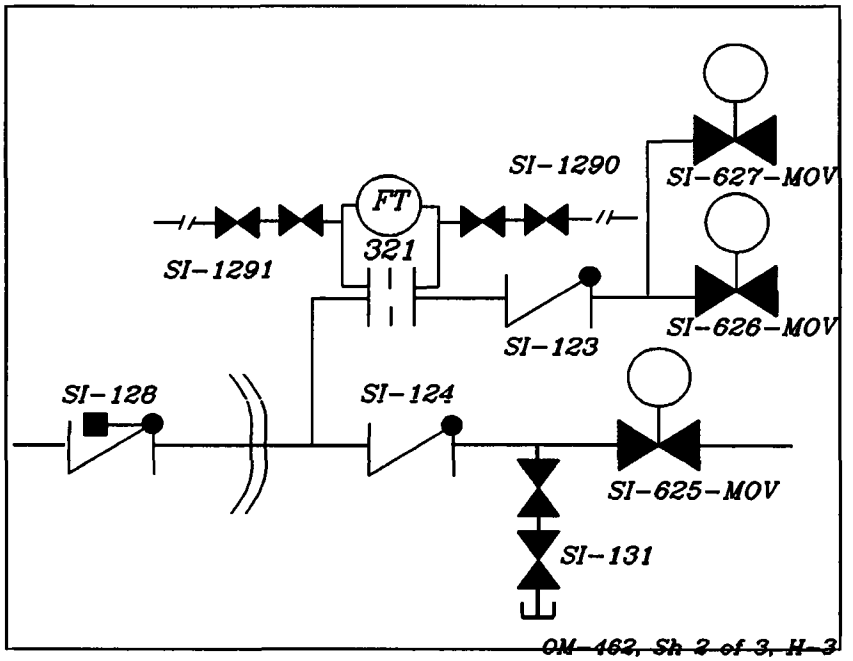

NOTE
Inside Containment Alignment is preferred to provide operational flexibility.

OUTSIDE CONTAINMENT ALIGNMENT

VALVE	POSITION	LOCATION	INITIALS
2-SI-1290	LOCKED SHUT	OUTSIDE 5' EAST PENET ROOM	
2-SI-1291	LOCKED SHUT	OUTSIDE 5' EAST PENET ROOM	
2-FT-321	PT **AND** TEST CONN CAPS INSTALLED	OUTSIDE 5' EAST PENET ROOM	
2-SI-123	INSTALLED	27' EAST PENET ROOM, JUST INSIDE DOOR, BELOW FLOOR	
2-SI-124	INSTALLED	5' EAST PENET ROOM, OVERHEAD	

6.1 MECHANICAL PENETRATION CHECKS (Continued)

PENETRATION 4 SAFETY INJECTION (continued)

OR

SDC is in service with flow through this penetration	

INSIDE CONTAINMENT ALIGNMENT

VALVE	POSITION	LOCATION	INITIALS
2-SI-128	INSTALLED	45', BELOW SIT	

6.1 MECHANICAL PENETRATION CHECKS (Continued)

PENETRATION 6 SAFETY INJECTION

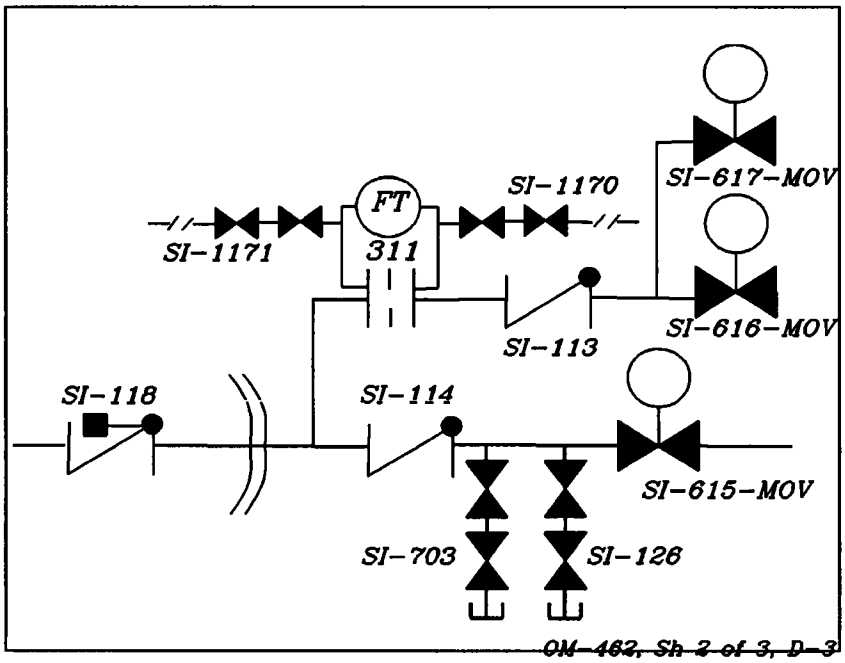

NOTE
Inside Containment Alignment is preferred to provide operational flexibility.

OUTSIDE CONTAINMENT ALIGNMENT

VALVE	POSITION	LOCATION	INITIALS
2-SI-1170	LOCKED SHUT	OUTSIDE 5' EAST PENET ROOM	
2-SI-1171	LOCKED SHUT	OUTSIDE 5' EAST PENET ROOM	
2-FT-311	PT **AND** TEST CONN CAPS INSTALLED	OUTSIDE 5' EAST PENET ROOM	
2-SI-113	INSTALLED	27' EAST PENET ROOM, BELOW FLOOR	
2-SI-114	INSTALLED	5' EAST PENET ROOM, OVERHEAD	

6.1 MECHANICAL PENETRATION CHECKS (Continued)

PENETRATION 6 SAFETY INJECTION (continued)

OR

SDC is in service with flow through this penetration	

INSIDE CONTAINMENT ALIGNMENT

VALVE	POSITION	LOCATION	INITIALS
2-SI-118	INSTALLED	45', BELOW SIT	

6.1 MECHANICAL PENETRATION CHECKS (Continued)

27' EAST PENETRATION ROOM

(VIEW FROM OUTSIDE CONTAINMENT - SOUTH END)

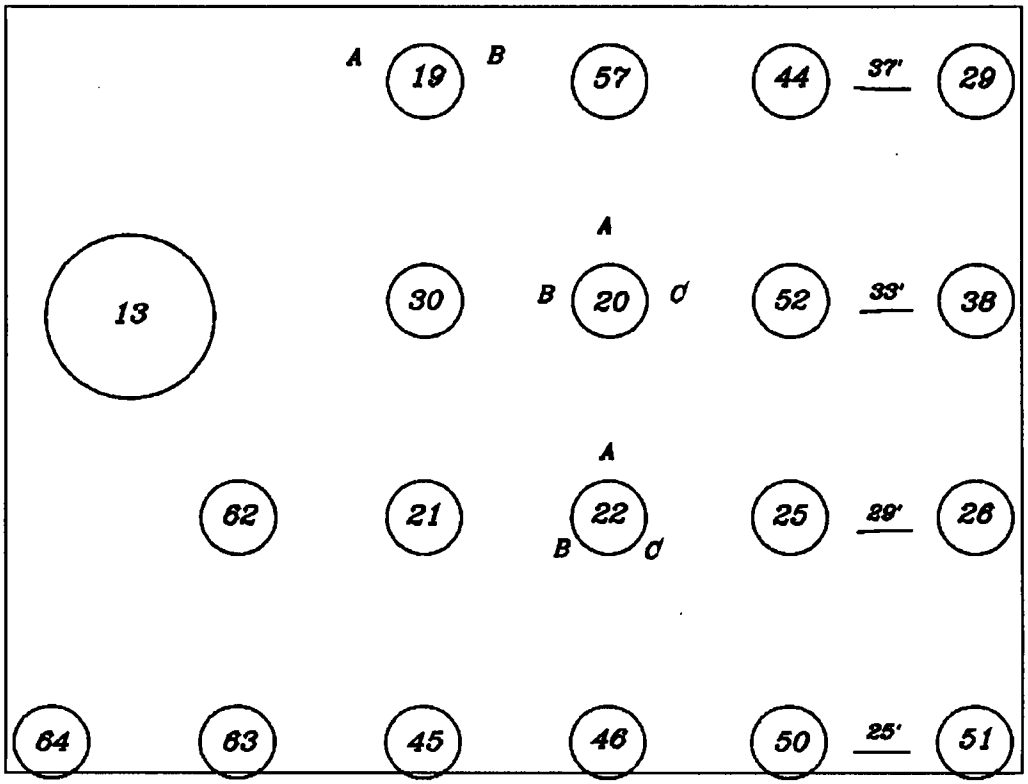

		19-IA/PA	57-SPARE	44-FIRE HEADER	29-SRW TO CNTMT CLR
13-CNTMT PURGE		30-SRW TO CNTMT CLR	20-N_2	* 52-SPARE	38-DI WATER
	62-SPARE	21-AFW TO 22 SG	22-AFW TO 21 SG	25-SRW TO CNTMT CLR	26-SRW TO CNTMT CLR
64	63-SPARE	45-SPARE	46-SPARE	50-ILRT	51-SPARE

* **NOTE** - PEN 52 is capped & welded shut inside the containment

6.1 MECHANICAL PENETRATION CHECKS (Continued)

PENETRATION 38 DEMINERALIZED WATER

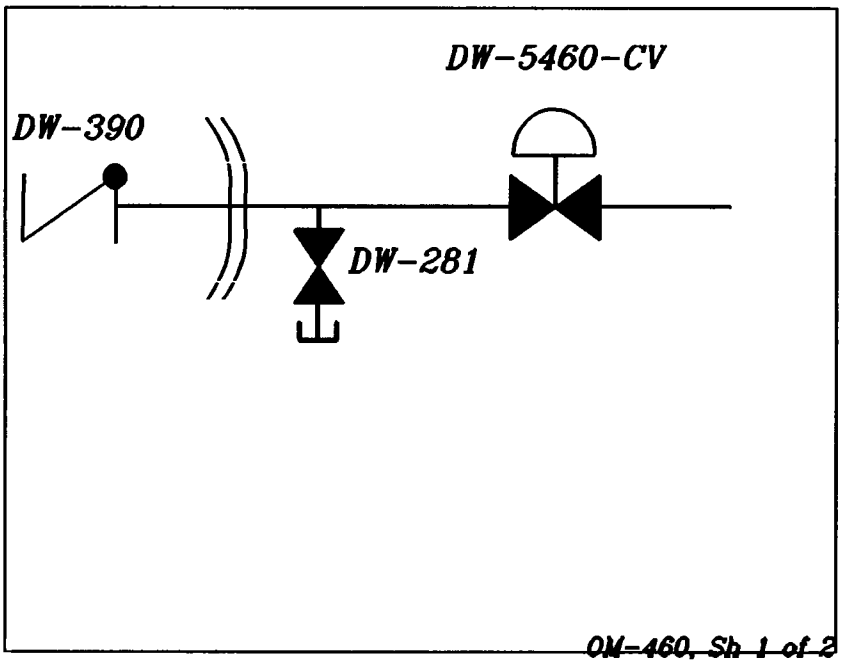

NOTE
Inside Containment Alignment is preferred to provide operational flexibility.

OUTSIDE CONTAINMENT ALIGNMENT

VALVE	POSITION	LOCATION	INITIALS
2-DW-281	LOCKED SHUT	27' EAST PENET ROOM, W OF FIRE MOV	
2-DW-5460-CV	SHUT	2C10	

OR

DI water system is in service with flow through this penetration	

6.1 MECHANICAL PENETRATION CHECKS (Continued)

PENETRATION 38 DEMINERALIZED WATER (continued)

INSIDE CONTAINMENT ALIGNMENT

2-DW-390	INSTALLED	27' CNTMT E AT PEN #38	

6.1 MECHANICAL PENETRATION CHECKS (Continued)

PENETRATION 44 FIRE PROTECTION

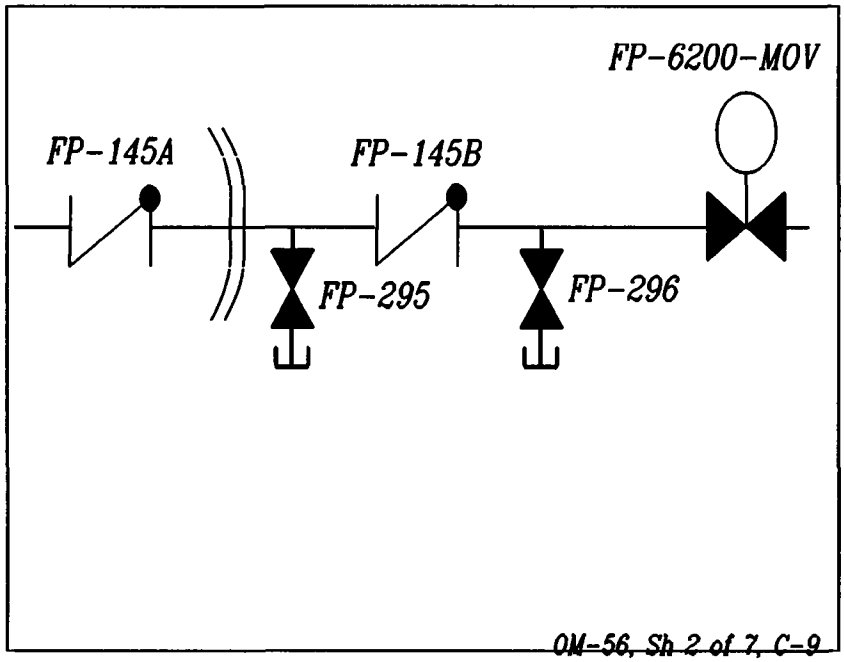

OUTSIDE CONTAINMENT ALIGNMENT

VALVE	POSITION	LOCATION	INITIALS
0-FP-295	LOCKED SHUT	27' EAST PENET ROOM, NW OF FIRE MOV, 9' OVERHEAD	
0-FP-145B	INSTALLED	27' EAST PENET ROOM NW OF FIRE MOV, 9' OVERHEAD	

INSIDE CONTAINMENT ALIGNMENT

0-FP-145A	INSTALLED	AT PENET 44	

6.1 MECHANICAL PENETRATION CHECKS (Continued)

PENETRATION 50 ILRT PRESSURIZATION

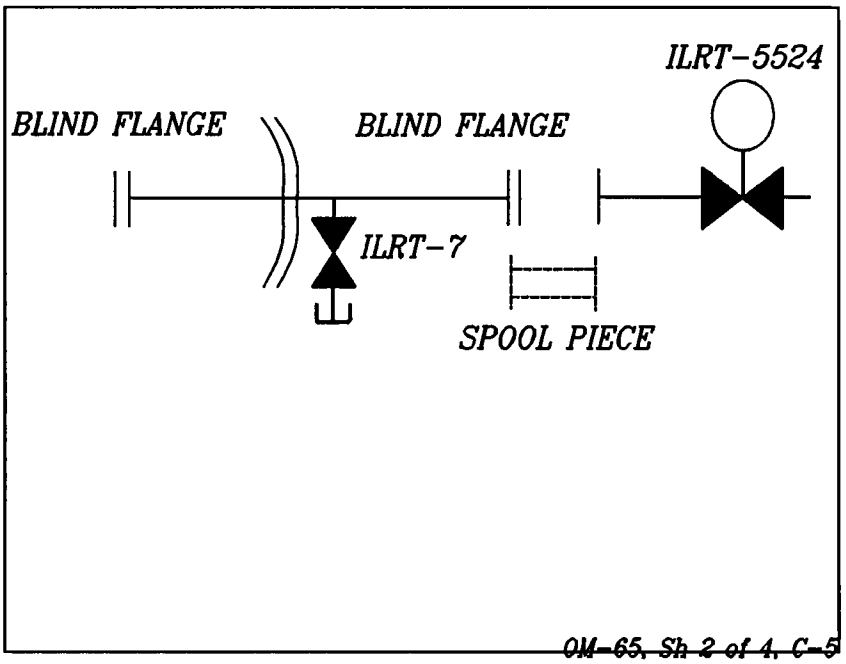

OUTSIDE CONTAINMENT ALIGNMENT

VALVE	POSITION	LOCATION	INITIALS
2-ILRT-7	LOCKED SHUT	27' EAST PENET ROOM, AT DECKING UNDER FIRE PENET	
BLIND FLANGE	INSTALLED	27' EAST PENET ROOM, AT DECKING UNDER FIRE PENET	

6.1 MECHANICAL PENETRATION CHECKS (Continued)

PENETRATION 50 ILRT PRESSURIZATION (continued)

OR

SPOOL PIECE	INSTALLED	27' EAST PENET ROOM, AT DECKING UNDER FIRE PENET	
2-ILRT-5524-MOV	SHUT/OPEN*	ILRT TEST CONSOLE	
2-ILRT-7	LOCKED SHUT	27' EAST PENET ROOM, AT DECKING UNDER FIRE PENET	

* **IF** Spoolpiece is installed and 2-ILRT-5524-MOV is OPEN, **THEN VERIFY** portable air compressor(s) supplying pressurized air through 2-ILRT-5524-MOV to Containment **AND** a reverse flow check valve exists in the air line between the temporary air compressor and the Containment. _____

INSIDE CONTAINMENT ALIGNMENT

BLIND FLANGE	INSTALLED	BASEMENT, E SIDE, 25' OVERHEAD	

6.1 MECHANICAL PENETRATION CHECKS (Continued)

PENETRATION 20A N_2 TO SITs

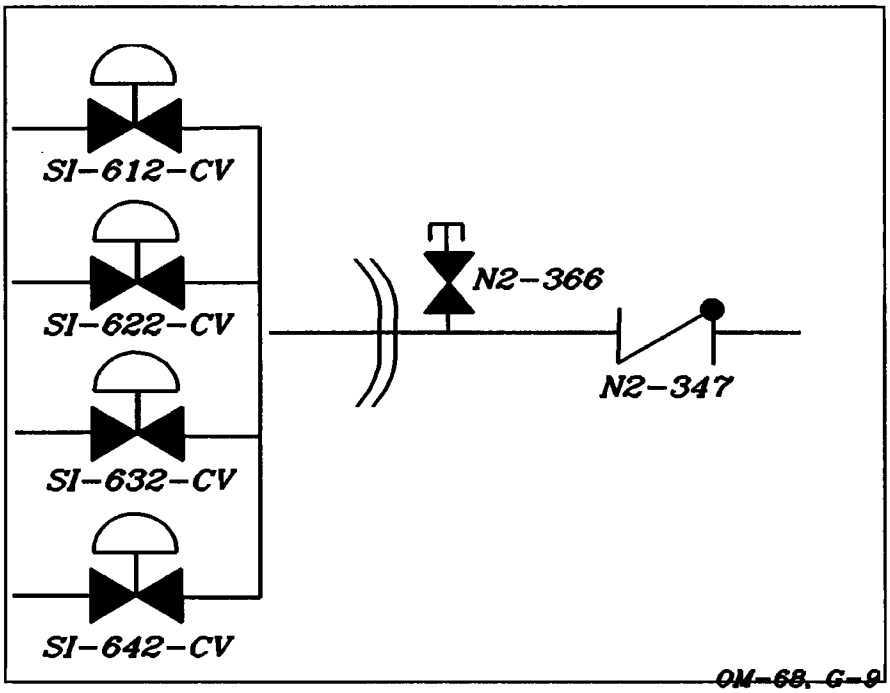

OUTSIDE CONTAINMENT ALIGNMENT

VALVE	POSITION	LOCATION	INITIALS
O-N2-366	LOCKED SHUT	27' EAST PENET ROOM, 33' LEVEL, BEHIND AFW CVs	
O-N2-347	INSTALLED	27' EAST PENET ROOM	

INSIDE CONTAINMENT ALIGNMENT

- - - - - - -	- - - - - - - - -	NONE - - - - - - - - - - - - -	- - - -

6.1 MECHANICAL PENETRATION CHECKS (Continued)

PENETRATION 20B N_2 TO RCDT

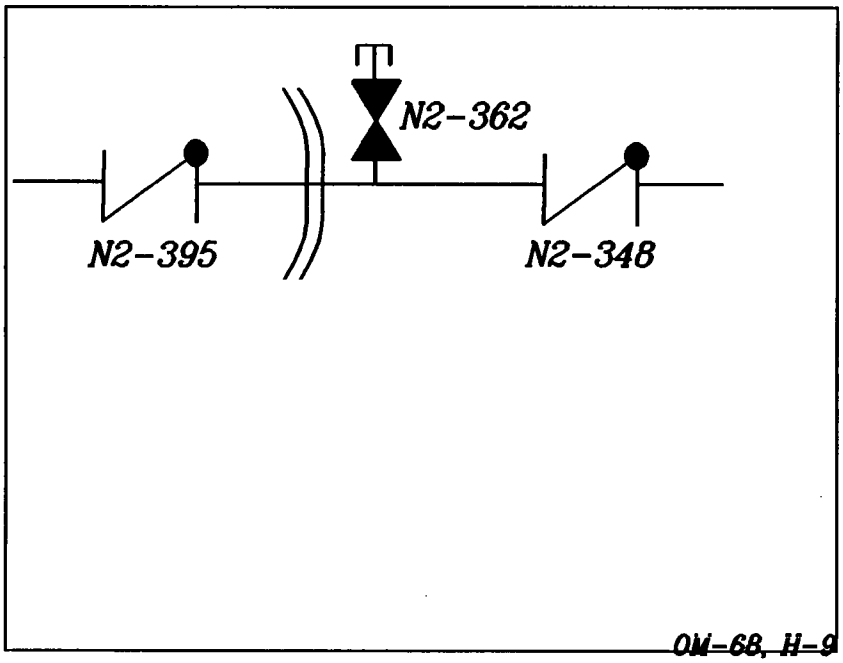

OUTSIDE CONTAINMENT ALIGNMENT

VALVE	POSITION	LOCATION	INITIALS
0-N2-362	LOCKED SHUT	27' EAST PENET ROOM, 33' LEVEL, BEHIND AFW CVs	
0-N2-348	INSTALLED	27' EAST PENET ROOM	

INSIDE CONTAINMENT ALIGNMENT

0-N2-395	INSTALLED	AT PENET 20B	

6.1 MECHANICAL PENETRATION CHECKS (Continued)

PENETRATION 20C N_2 TO SGs **AND** QUENCH TANK

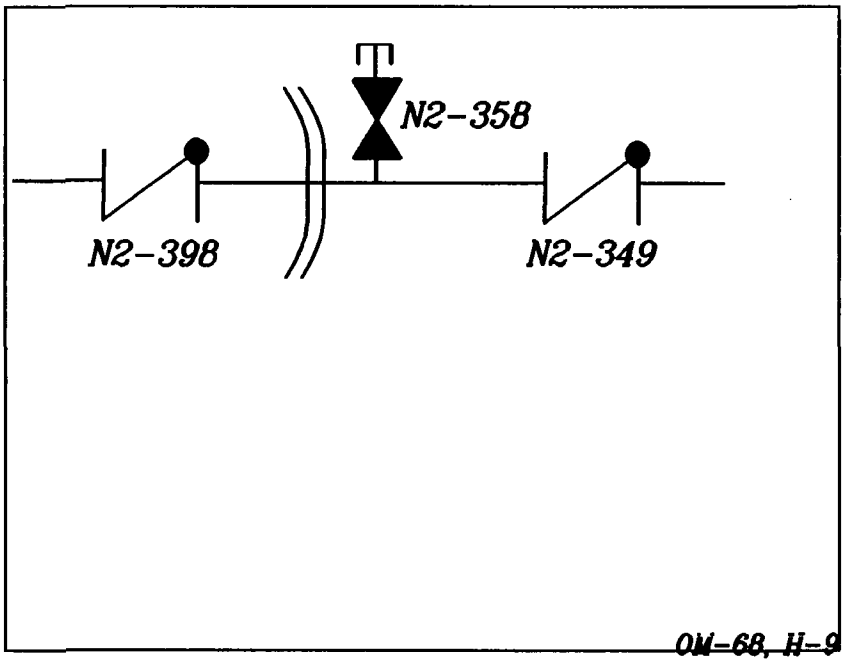

OUTSIDE CONTAINMENT ALIGNMENT

VALVE	POSITION	LOCATION	INITIALS
0-N2-358	LOCKED SHUT	27' EAST PENET ROOM, 33' LEVEL, BEHIND AFW CVs	
0-N2-349	INSTALLED	27' EAST PENET ROOM	

INSIDE CONTAINMENT ALIGNMENT

0-N2-398	INSTALLED	AT PENET 20C	

6.1 MECHANICAL PENETRATION CHECKS (Continued)

PENETRATION 19A INSTRUMENT AIR

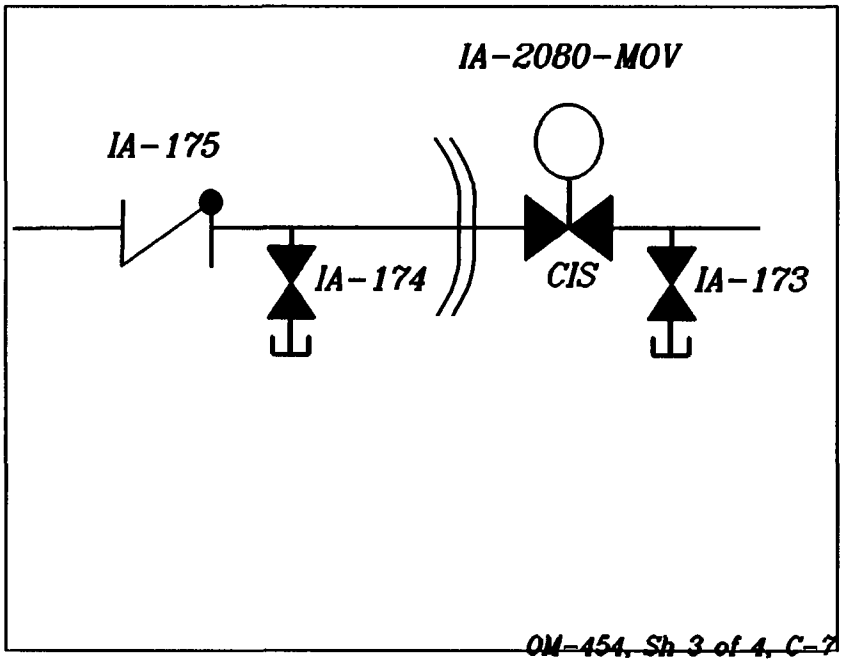

NOTE
Inside Containment Alignment is preferred to provide operational flexibility.

OUTSIDE CONTAINMENT ALIGNMENT

VALVE	POSITION	LOCATION	INITIALS
2-IA-2080-MOV	SHUT (1)	2C10	

(1) **IF NOT** controlled by NO-1-112,
THEN LOG in the Locked Valve Deviation Log

OR

IF 2-IA-2080-MOV is open,
THEN VERIFY the IA header pressurized as follows:

a. **UNCAP AND CRACK OPEN** 2-IA-173. _____

b. **CHECK** pressurized air vents from the line. _____

c. **SHUT AND CAP** 2-IA-173. _____

6.1 MECHANICAL PENETRATION CHECKS (Continued)

PENETRATION 19A INSTRUMENT AIR (continued)

INSIDE CONTAINMENT ALIGNMENT

VALVE	POSITION	LOCATION	INITIALS
2-IA-175	INSTALLED	45', S OF E STAIRWELL, AT PLATFORM 10' UNDER DECKING	
2-IA-174	LOCKED SHUT	45', S OF E STAIRWELL, AT PLATFORM 10' UNDER DECKING	

6.1 MECHANICAL PENETRATION CHECKS (Continued)

PENETRATION 19B PLANT AIR

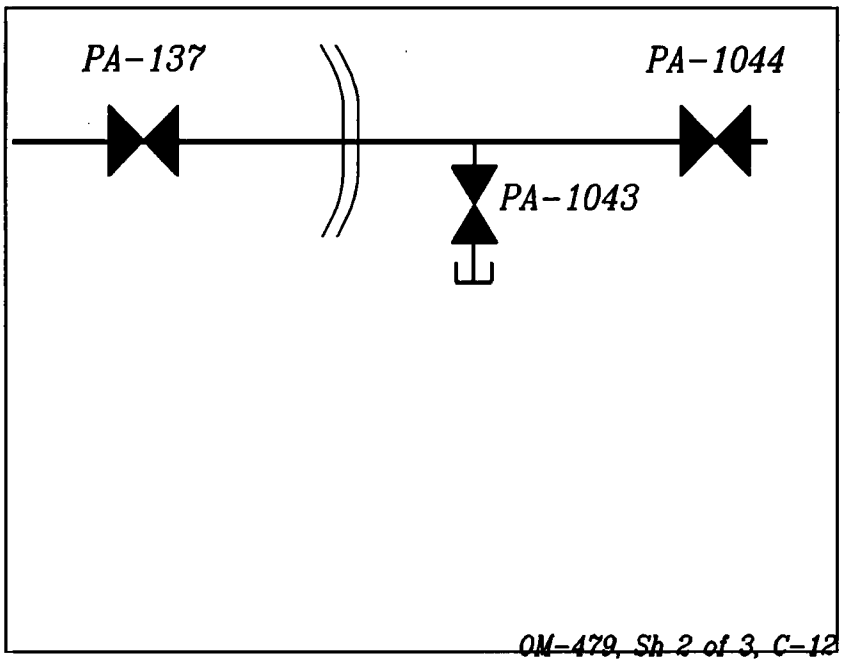

OUTSIDE CONTAINMENT ALIGNMENT

VALVE	POSITION	LOCATION	INITIALS
2-PA-1043	LOCKED SHUT	27' EAST PENET ROOM, 10' OVERHEAD, S OF PURGE SUPPLY	
2-PA-1044	LOCKED SHUT	27' EAST PENET ROOM, 10' OVERHEAD, S OF PURGE SUPPLY	

OR

IF 2-PA-1044 is open,
THEN VERIFY the PA header pressurized as follows:

a. **UNCAP AND CRACK OPEN** 2-PA-1043. _____

b. **CHECK** pressurized air vents from the line. _____

c. **SHUT AND CAP** 2-PA-1043. _____

d. **INDEPENDENTLY VERIFY** 2-PA-1043 LOCKED SHUT **AND** CAPPED. _____

6.1 MECHANICAL PENETRATION CHECKS (Continued)

PENETRATION 19B PLANT AIR (continued)

INSIDE CONTAINMENT ALIGNMENT

VALVE	POSITION	LOCATION	INITIALS
2-PA-137	LOCKED SHUT	N OF E STAIRWELL, AT PLATFORM 10' UNDER DECKING	

6.1 MECHANICAL PENETRATION CHECKS (Continued)

PENETRATION 26 23 CONTAINMENT COOLER SRW SUPPLY

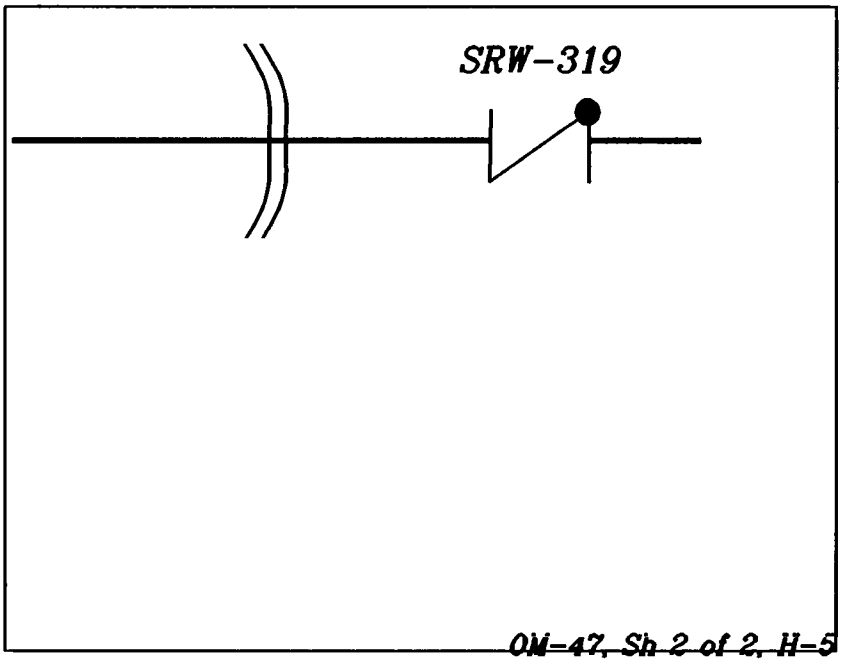

NOTE
Outside Containment Alignment is preferred to provide operational flexibility.

OUTSIDE CONTAINMENT ALIGNMENT

VALVE	POSITION	LOCATION	INITIALS
2-SRW-319	INSTALLED	27' EAST PENET ROOM	

OR

SRW is in service with flow through this penetration.	

INSIDE CONTAINMENT ALIGNMENT

- - - - - - -	- - - - - - - - -	NONE - - - - - - - - - - - - -	- - - -

6.1 MECHANICAL PENETRATION CHECKS (Continued)

PENETRATION 29 23 CONTAINMENT COOLER SRW RETURN

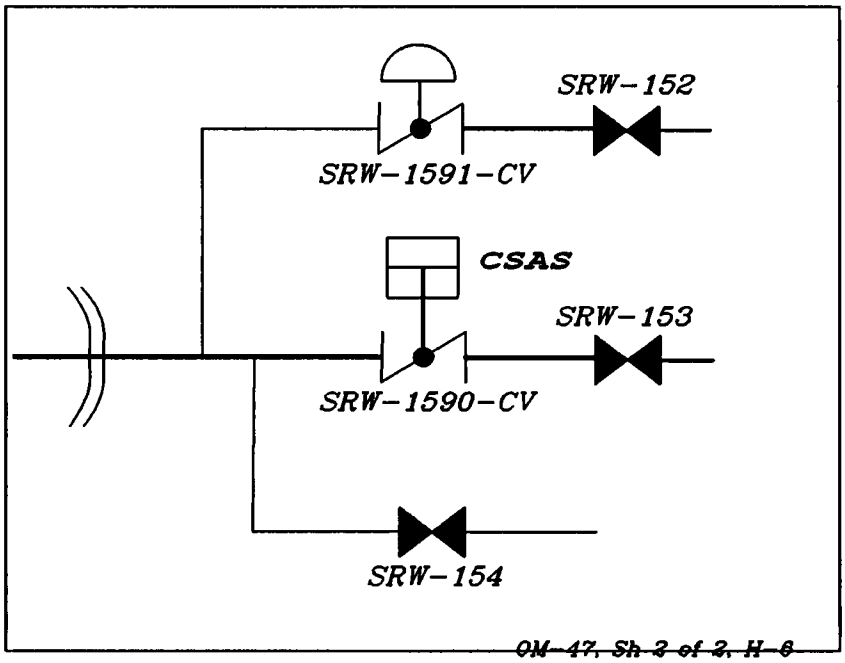

OUTSIDE CONTAINMENT ALIGNMENT

VALVE	POSITION	LOCATION	INITIALS
2-SRW-154	LOCKED SHUT	27' EAST PENET ROOM, S OF CNTMT PURGE SUPPLY	
2-SRW-152	SHUT (1)	27' EAST PENET ROOM, S OF CNTMT PURGE SUPPLY	
2-SRW-153	SHUT (1)	27' EAST PENET ROOM, S OF CNTMT PURGE SUPPLY	
2-SRW-1591-CV	INSTALLED	27' EAST PENET ROOM, S OF CNTMT PURGE SUPPLY	
2-SRW-1590-CV	INSTALLED	27' EAST PENET ROOM, S OF CNTMT PURGE SUPPLY	

(1) **IF NOT** controlled by NO-1-112,
THEN LOG in the Locked Valve Deviation Log

6.1 MECHANICAL PENETRATION CHECKS (Continued)

PENETRATION 29 23 CONTAINMENT COOLER SRW RETURN (continued)

OR

SRW is in service with flow through this penetration.	

INSIDE CONTAINMENT ALIGNMENT

- - - - - - -	- - - - - - - - -	NONE - - - - - - - - - - - - -	- - - - -

6.1 MECHANICAL PENETRATION CHECKS (Continued)

PENETRATION 25 21 CONTAINMENT COOLER SRW SUPPLY

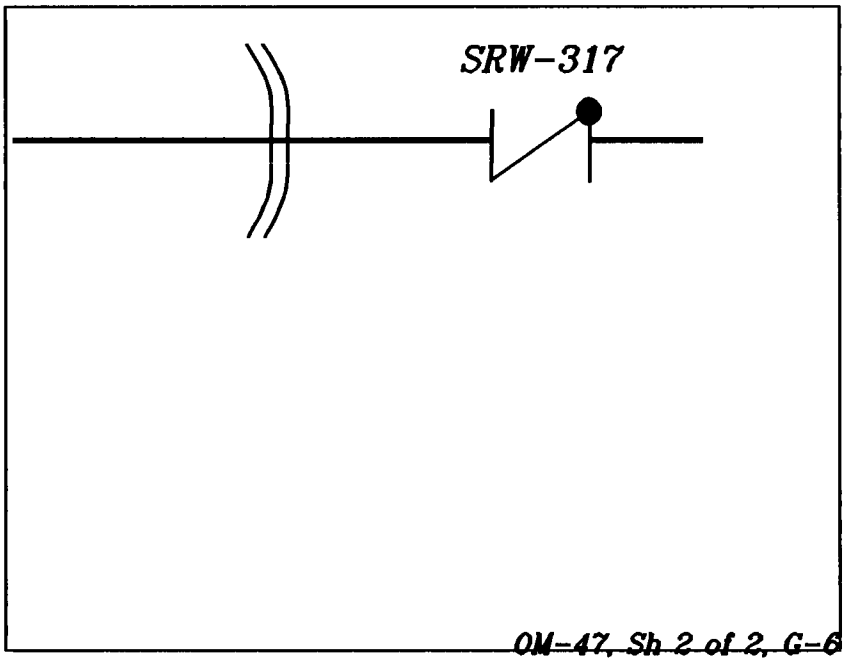

NOTE
Outside Containment Alignment is preferred to provide operational flexibility.

OUTSIDE CONTAINMENT ALIGNMENT

VALVE	POSITION	LOCATION	INITIALS
2-SRW-317	INSTALLED	5' EAST PENET ROOM, E WALL	

OR

SRW is in service with flow through this penetration.	

INSIDE CONTAINMENT ALIGNMENT

- - - - - - -	- - - - - - - - -	NONE - - - - - - - - - - - - -	- - - -

6.1 MECHANICAL PENETRATION CHECKS (Continued)

PENETRATION 13 CONTAINMENT PURGE SUPPLY

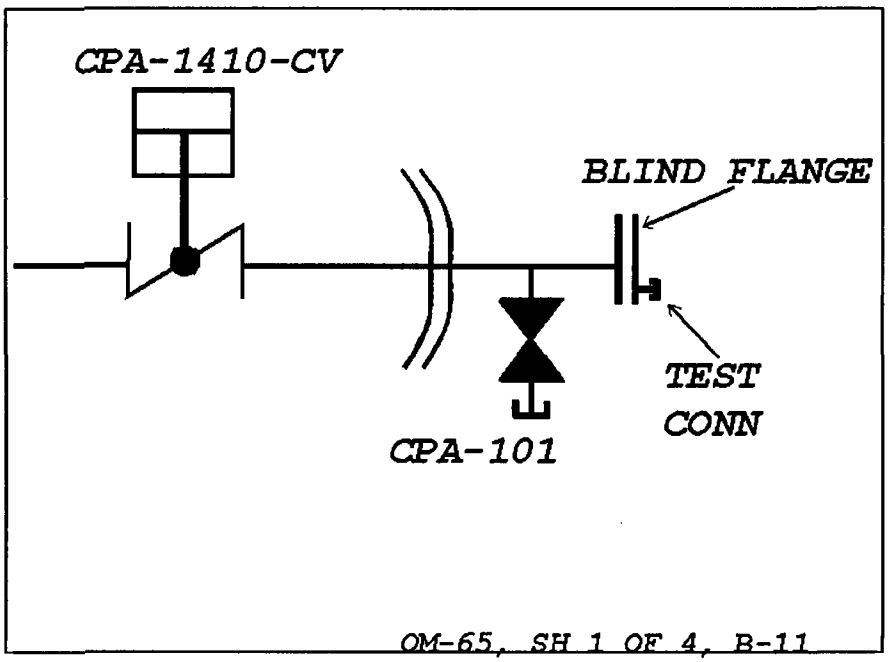

CONTAINMENT ALIGNMENT

VALVE	POSITION	LOCATION	INITIALS
2-CPA-1410-CV	SHUT/OPEN*	2C10	

* 2-CPA-1410-CV may be open during movement of irradiated fuel assemblies within containment, IF CRS A is operable, OR IF NO-1-114 controls are in place, AND capable of being shut. (Circle position PER TS 3.9.3 OR NO-1-114)

6.1 MECHANICAL PENETRATION CHECKS (Continued)

PENETRATION 13 CONTAINMENT PURGE SUPPLY (continued)

OR

VALVE	POSITION	LOCATION	INITIALS
2-CPA-101	LOCKED SHUT	27' EAST PENET ROOM, 36' LEVEL, ABOVE LADDER TO 5'	
BLIND FLANGE	INSTALLED*	27' EAST PENET ROOM, S. END	
FLANGE TEST CONNECTION	CAPPED	27' EAST PENET ROOM, S. END	

* Every other bolt may be removed.

6.1 MECHANICAL PENETRATION CHECKS (Continued)

PENETRATION 30 21 CONTAINMENT COOLER SRW RETURN

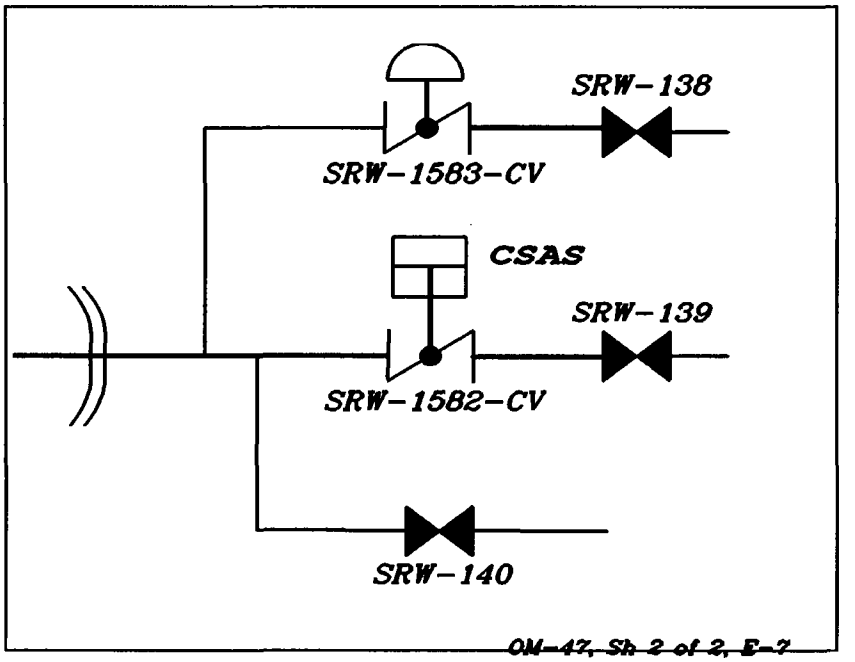

OUTSIDE CONTAINMENT ALIGNMENT

VALVE	POSITION	LOCATION	INITIALS
2-SRW-140	LOCKED SHUT	27' EAST PENET ROOM, BY AFW CVs	
2-SRW-138	SHUT (1)	27' EAST PENET ROOM	
2-SRW-139	SHUT (1)	27' EAST PENET ROOM	
2-SRW-1583-CV	INSTALLED	27' EAST PENET ROOM	
2-SRW-1582-CV	INSTALLED	27' EAST PENET ROOM	

(1) IF NOT controlled by NO-1-112,
THEN LOG in the Locked Valve Deviation Log

OR

SRW is in service with flow through this penetration.	

6.1 MECHANICAL PENETRATION CHECKS (Continued)

PENETRATION 30 21 CONTAINMENT COOLER SRW RETURN (continued)

INSIDE CONTAINMENT ALIGNMENT

- - - - - - -	- - - - - - - - -	NONE - - - - - - - - - - - - -	- - - - -

6.1 MECHANICAL PENETRATION CHECKS (Continued)

PENETRATION 8 NORMAL CONTAINMENT SUMP OUTLET

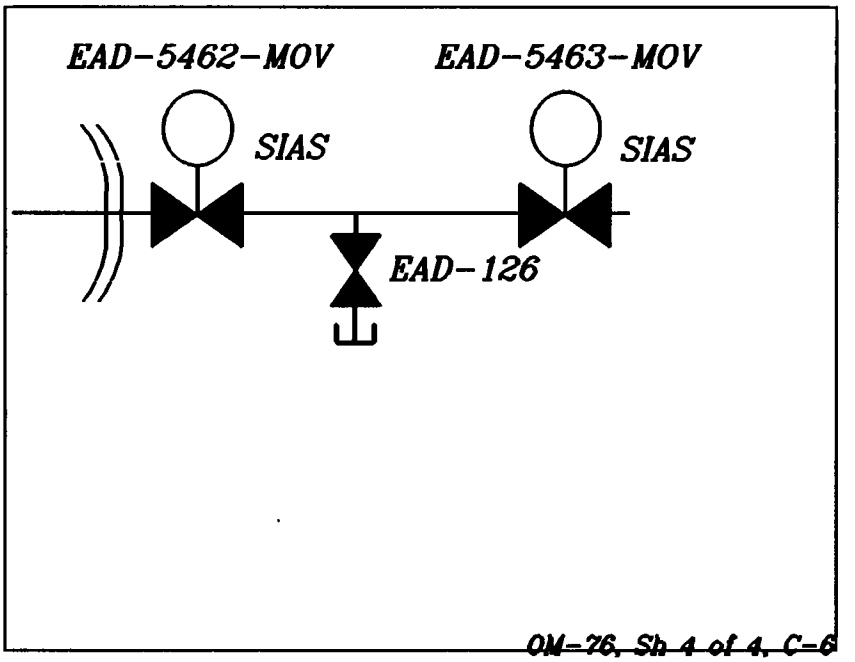

OUTSIDE CONTAINMENT ALIGNMENT

VALVE	POSITION	LOCATION	INITIALS
2-EAD-5463-MOV	SHUT (1)	2C10	
2-EAD-126	LOCKED SHUT	5' AUX BLDG, UNDER DECKING TO PIPE CHASE	

OR

2-EAD-5462-MOV	SHUT (1)	2C10	

(1) Sump valve may be administratively opened PER NO-1-114.

INSIDE CONTAINMENT ALIGNMENT

- - - - - - -	- - - - - - - - -	NONE - - - - - - - - - - - - -	- - - -

6.1 MECHANICAL PENETRATION CHECKS (Continued)

PENETRATION 12 EAST CONTAINMENT EMERGENCY SUMP OUTLET

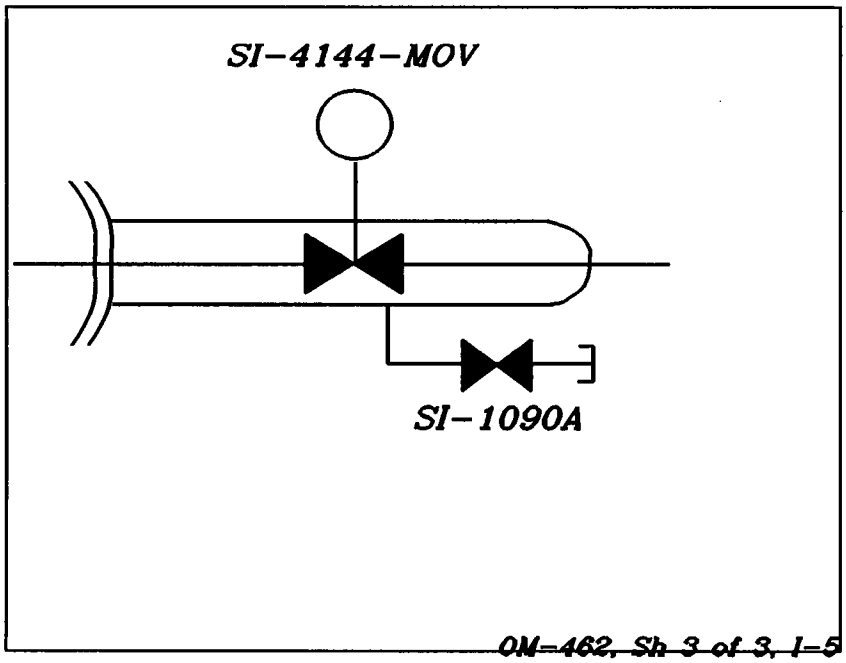

OUTSIDE CONTAINMENT ALIGNMENT

VALVE	POSITION	LOCATION	INITIALS
2-SI-4144-MOV	SHUT	2C08	

INSIDE CONTAINMENT ALIGNMENT

- - - - - - -	- - - - - - - - -	NONE - - - - - - - - - - - - -	- - - - -

6.1 MECHANICAL PENETRATION CHECKS (Continued)

PENETRATION 11 WEST CONTAINMENT EMERGENCY SUMP OUTLET

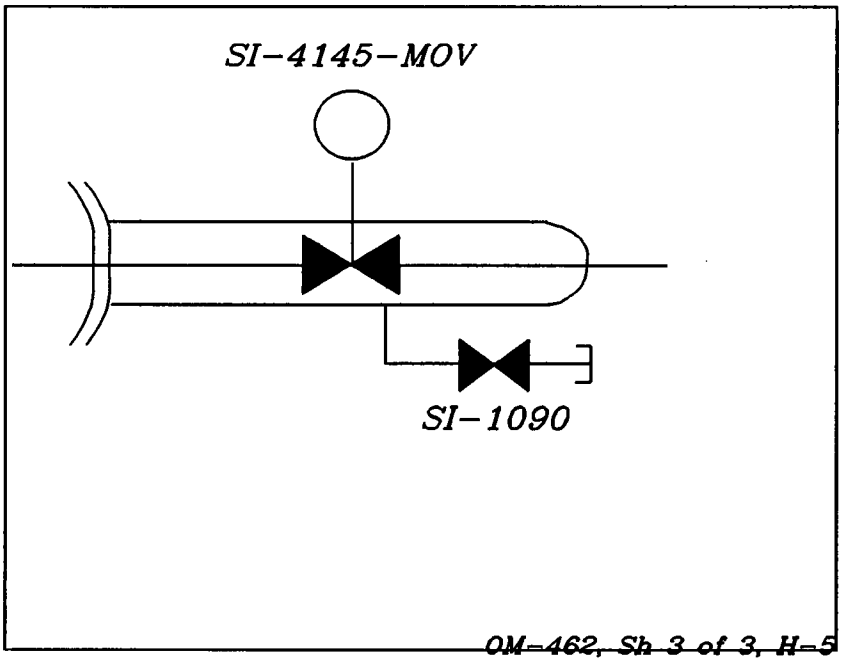

OUTSIDE CONTAINMENT ALIGNMENT

VALVE	POSITION	LOCATION	INITIALS
2-SI-4145-MOV	SHUT	2C09	

INSIDE CONTAINMENT ALIGNMENT

- - - - - - -	- - - - - - - - -	NONE - - - - - - - - - - - - -	- - - -

6.1 MECHANICAL PENETRATION CHECKS (Continued)

PENETRATION 72 CONTAINMENT PRESSURE

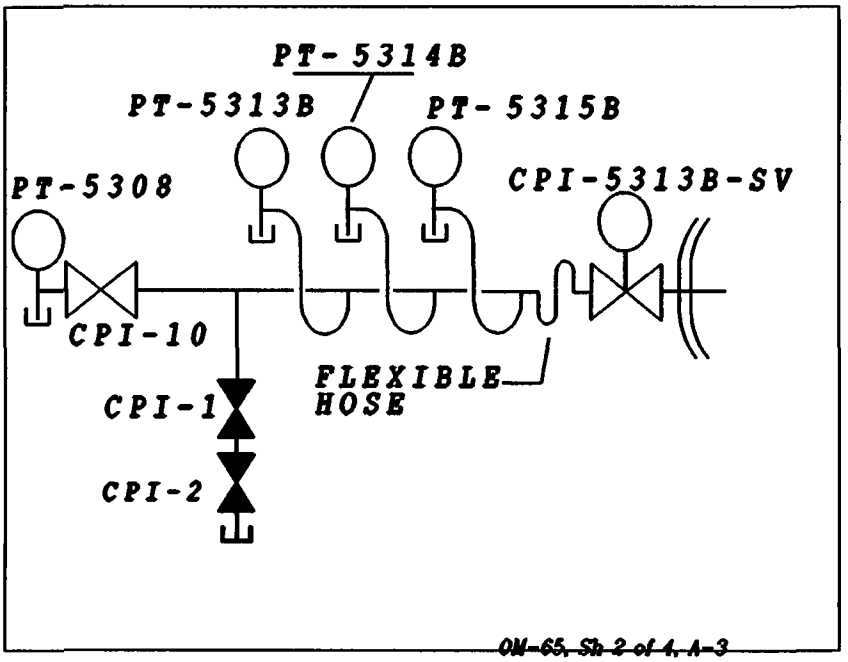

OUTSIDE CONTAINMENT ALIGNMENT

VALVE	POSITION	LOCATION	INITIALS
2-CPI-2	LOCKED SHUT	45' EAST ELEC PENET, W WALL	
2-CPI-1	LOCKED SHUT	45' EAST ELEC PENET, W WALL	
2-PT-5313B	PT **AND** TEST CONN CAP INSTALLED	45' EAST ELEC PENET, N WALL	
2-PT-5314B	PT **AND** TEST CONN CAP INSTALLED	45' EAST ELEC PENET, N WALL	
2-PT-5315B	PT **AND** TEST CONN CAP INSTALLED	45' EAST ELEC PENET, N WALL	
2-PT-5308	PT **AND** TEST CONN CAP INSTALLED	45' EAST ELEC PENET, N WALL	

6.1 MECHANICAL PENETRATION CHECKS (Continued)

PENETRATION 72 CONTAINMENT PRESSURE (continued)

OR

OUTSIDE CONTAINMENT ALIGNMENT
(continued)

VALVE	POSITION	LOCATION	INITIALS
2-CPI-5313B-SV	SHUT (1)	2C10	

(1) IF NOT controlled by NO-1-112,
THEN LOG in the Locked Valve Deviation Log

INSIDE CONTAINMENT ALIGNMENT

- - - - - - -	- - - - - - - - -	NONE - - - - - - - - - - - - -	- - - -

6.1 MECHANICAL PENETRATION CHECKS (Continued)

PENETRATION 84 ILRT VENT

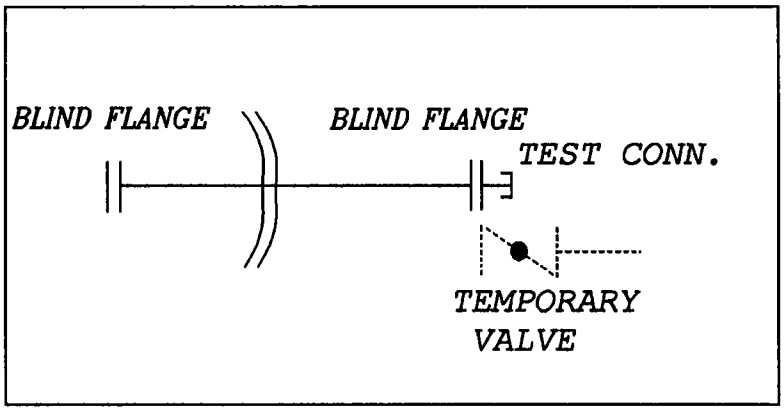

OUTSIDE CONTAINMENT ALIGNMENT

VALVE	POSITION	LOCATION	INITIALS
BLIND FLANGE	INSTALLED	45' EAST ELEC PENET, W WALL	
TEST CONN.	CAPPED	45' EAST ELEC PENET, W WALL	

OR

TEMPORARY VALVE	INSTALLED AND SHUT	45' EAST ELEC PENET, W WALL	

INSIDE CONTAINMENT ALIGNMENT

BLIND FLANGE	INSTALLED	45' EAST WALL	

6.1 MECHANICAL PENETRATION CHECKS (Continued)

PENETRATION 77 CONTAINMENT PRESSURE

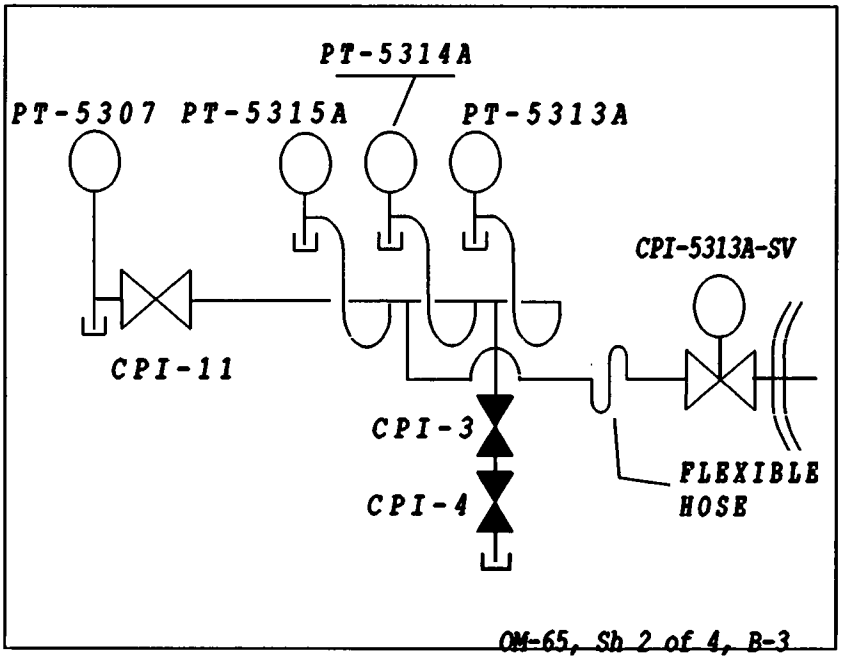

OUTSIDE CONTAINMENT ALIGNMENT

VALVE	POSITION	LOCATION	INITIALS
2-CPI-4	LOCKED SHUT	45' EAST ELEC PENET, N WALL	
2-CPI-3	LOCKED SHUT	45' EAST ELEC PENET, N WALL	
2-PT-5313A	PT **AND** TEST CONN CAP INSTALLED	45' EAST ELEC PENET, N WALL	
2-PT-5314A	PT **AND** TEST CONN CAP INSTALLED	45' EAST ELEC PENET, N WALL	
2-PT-5315A	PT **AND** TEST CONN CAP INSTALLED	45' EAST ELEC PENET, N WALL	
2-PT-5307	PT **AND** TEST CONN CAP INSTALLED	45' EAST ELEC PENET, N WALL	

6.1 MECHANICAL PENETRATION CHECKS (Continued)

PENETRATION 77 CONTAINMENT PRESSURE (continued)

OR

OUTSIDE CONTAINMENT ALIGNMENT
(continued)

VALVE	POSITION	LOCATION	INITIALS
2-CPI-5313A-SV	SHUT (1)	2C10	

(1) **IF NOT** controlled by NO-1-112,
THEN LOG in the Locked Valve Deviation Log

INSIDE CONTAINMENT ALIGNMENT

- - - - - - -	- - - - - - - - -	NONE - - - - - - - - - - - - -	- - - - -

6.1 MECHANICAL PENETRATION CHECKS (Continued)

PENETRATION 78 CONTAINMENT PRESSURE

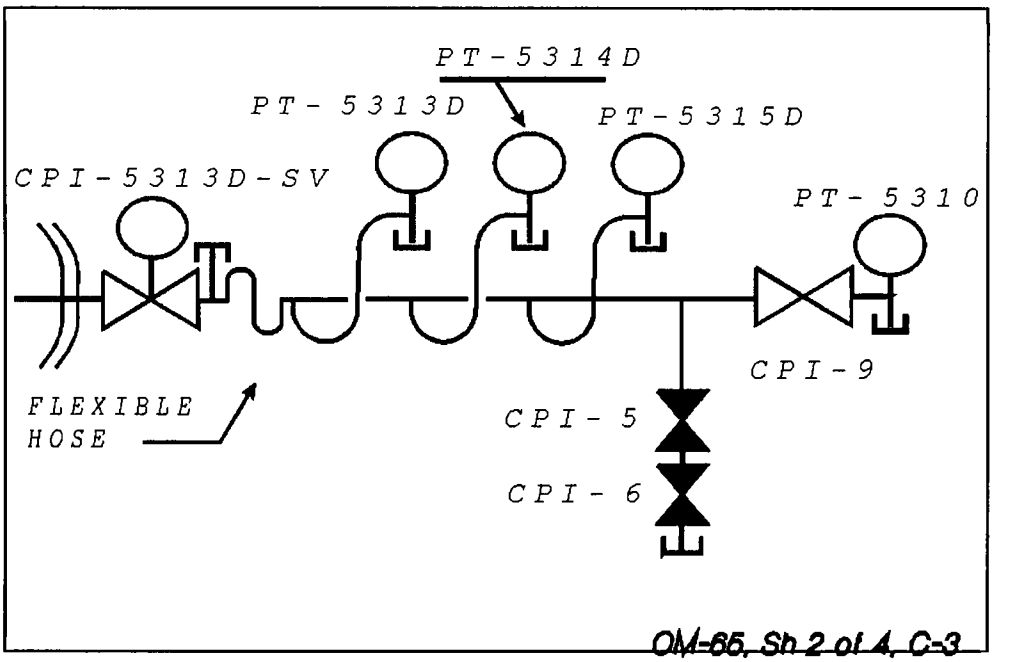

OUTSIDE CONTAINMENT ALIGNMENT

VALVE	POSITION	LOCATION	INITIALS
2-CPI-6	LOCKED SHUT	45' WEST ELEC PENET, W WALL	
2-CPI-5	LOCKED SHUT	45' WEST ELEC PENET, W WALL	
2-PT-5313D	PT **AND** TEST CONN CAP INSTALLED	45' WEST ELEC PENET, W WALL	
2-PT-5314D	PT **AND** TEST CONN CAP INSTALLED	45' WEST ELEC PENET, W WALL	
2-PT-5315D	PT **AND** TEST CONN CAP INSTALLED	45' WEST ELEC PENET, W WALL	
2-PT-5310	PT **AND** TEST CONN CAP INSTALLED	45' WEST ELEC PENET, W WALL	
PIPE CONN	CAP INSTALLED	45' WEST ELEC PENET, W WALL	

6.1 MECHANICAL PENETRATION CHECKS (Continued)

PENETRATION 78 CONTAINMENT PRESSURE (continued)

OR

OUTSIDE CONTAINMENT ALIGNMENT
(continued)

2-CPI-5313D-SV	SHUT (1)	2C10	

(1) **IF NOT** controlled by NO-1-112,
THEN LOG in the Locked Valve Deviation Log

INSIDE CONTAINMENT ALIGNMENT

- - - - - - -	- - - - - - - - -	NONE - - - - - - - - - - - - -	- - - -

6.1 MECHANICAL PENETRATION CHECKS (Continued)

PENETRATION 83 CONTAINMENT PRESSURE

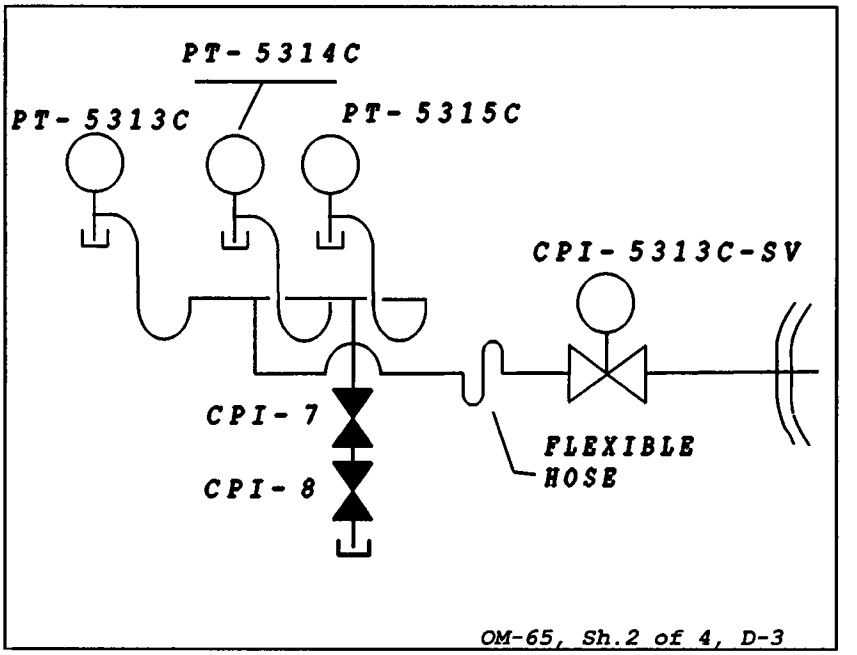

OUTSIDE CONTAINMENT ALIGNMENT

VALVE	POSITION	LOCATION	INITIALS
2-CPI-8	LOCKED SHUT	45' WEST ELEC PENET, N WALL	
2-CPI-7	LOCKED SHUT	45' WEST ELEC PENET, N WALL	
2-PT-5313C	PT **AND** TEST CONN CAP INSTALLED	45' WEST ELEC PENET, N WALL	
2-PT-5314C	PT **AND** TEST CONN CAP INSTALLED	45' WEST ELEC PENET, N WALL	
2-PT-5315C	PT **AND** TEST CONN CAP INSTALLED	45' WEST ELEC PENET, N WALL	

6.1 MECHANICAL PENETRATION CHECKS (Continued)

PENETRATION 83 CONTAINMENT PRESSURE (continued)

OR

OUTSIDE CONTAINMENT ALIGNMENT
(continued)

VALVE	POSITION	LOCATION	INITIALS
2-CPI-5313C-SV	SHUT (1)	2C10	

(1) **IF NOT** controlled by NO-1-112,
THEN LOG in the Locked Valve Deviation Log

INSIDE CONTAINMENT ALIGNMENT

- - - - - - -	- - - - - - - - -	NONE - - - - - - - - - - - - -	- - - -

6.1 MECHANICAL PENETRATION CHECKS (Continued)

PENETRATION 42 FUEL TRANSFER TUBE

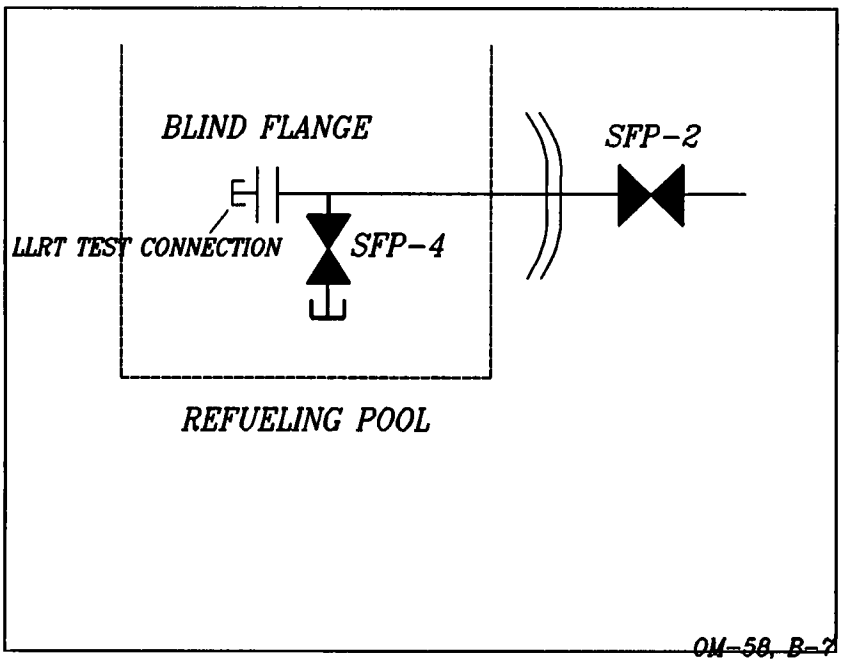

OUTSIDE CONTAINMENT ALIGNMENT

VALVE	POSITION	LOCATION	INITIALS
0-SFP-2	LOCKED SHUT	69' AUX BLDG, S END OF SFP	

INSIDE CONTAINMENT ALIGNMENT

NOTE
A separate SWP is required to enter the RFP.

0-SFP-4	LOCKED SHUT	N END OF REFUELING POOL	
BLIND FLANGE	INSTALLED	N END OF REFUELING POOL	
LLRT TEST CONNECTION	CAPPED	N END OF REFUELING POOL	

6.1 MECHANICAL PENETRATION CHECKS (Continued)

PENETRATION 42 FUEL TRANSFER TUBE (continued)

OR

Refueling pool water level is greater than or equal to 23 ft above the top of irradiated fuel assemblies seated in the reactor vessel.	

6.1 MECHANICAL PENETRATION CHECKS (Continued)

CONTAINMENT EQUIPMENT HATCH

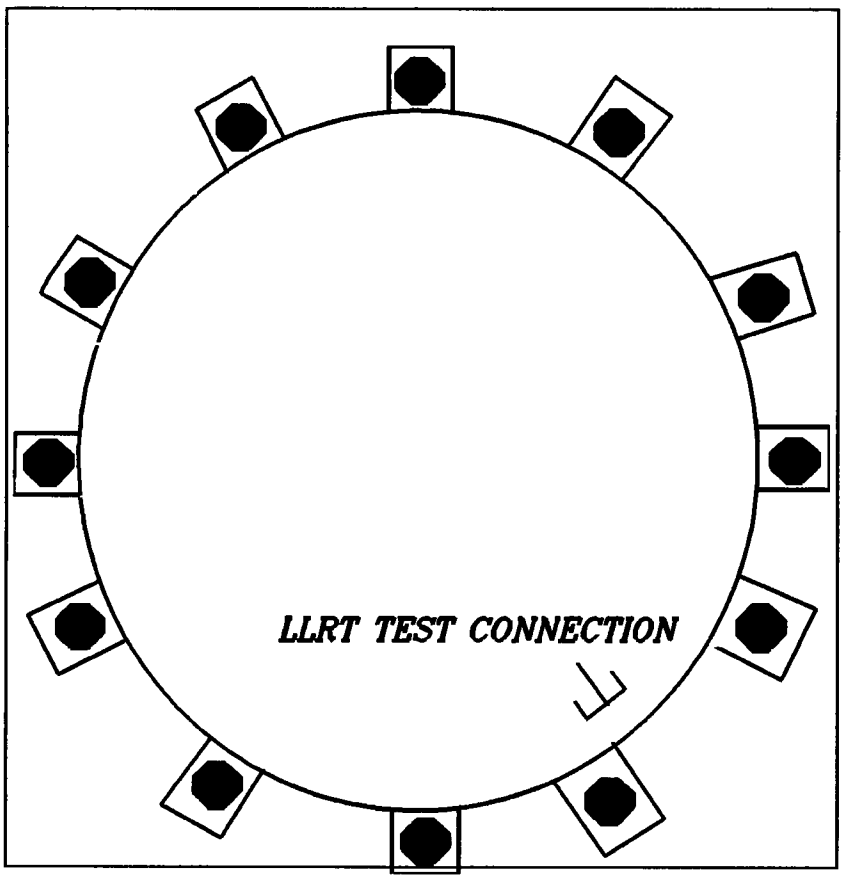

The Equipment Hatch may be used to meet Closure requirements for all conditions. The Containment Outage Door may be used in lieu of the Equipment Hatch for Closure requirements when allowed by NO-1-114.

6.1 MECHANICAL PENETRATION CHECKS (Continued)

CONTAINMENT EQUIPMENT HATCH (continued)

INSIDE CONTAINMENT ALIGNMENT

VALVE	POSITION	LOCATION	INITIALS
LLRT TEST CONNECTION	CAPPED	EQUIP HATCH	
HATCH IN PLACE	A MINIMUM OF 4 EVENLY SPACED BOLTS FOR CNTMT CLOSURE (CONTAINMENT DEVIATION NOT ALLOWED DURING REFUELING, OR NO SDC LOOP OPERABLE OR IN OPERATION) (1) [B0332]		

(1) Due to pressure concerns associated with the enclosed space, when the Containment Outage Door is closed and the Containment Equipment Hatch is installed, Equalizing Valve, 2-CPI-1002 is required to be open **PER** DOOR-1, OPENING AND CLOSING OF CONTAINMENT OUTAGE DOOR or HE-46, EQUIPMENT ACCESS DOOR REMOVAL AND INSTALLATION. The Containment Outage Door can **NOT** be used for Closure requirements if Equalizing Valve, 2-CPI-1002 is open.

6.1 MECHANICAL PENETRATION CHECKS (Continued)

CONTAINMENT OUTAGE DOOR

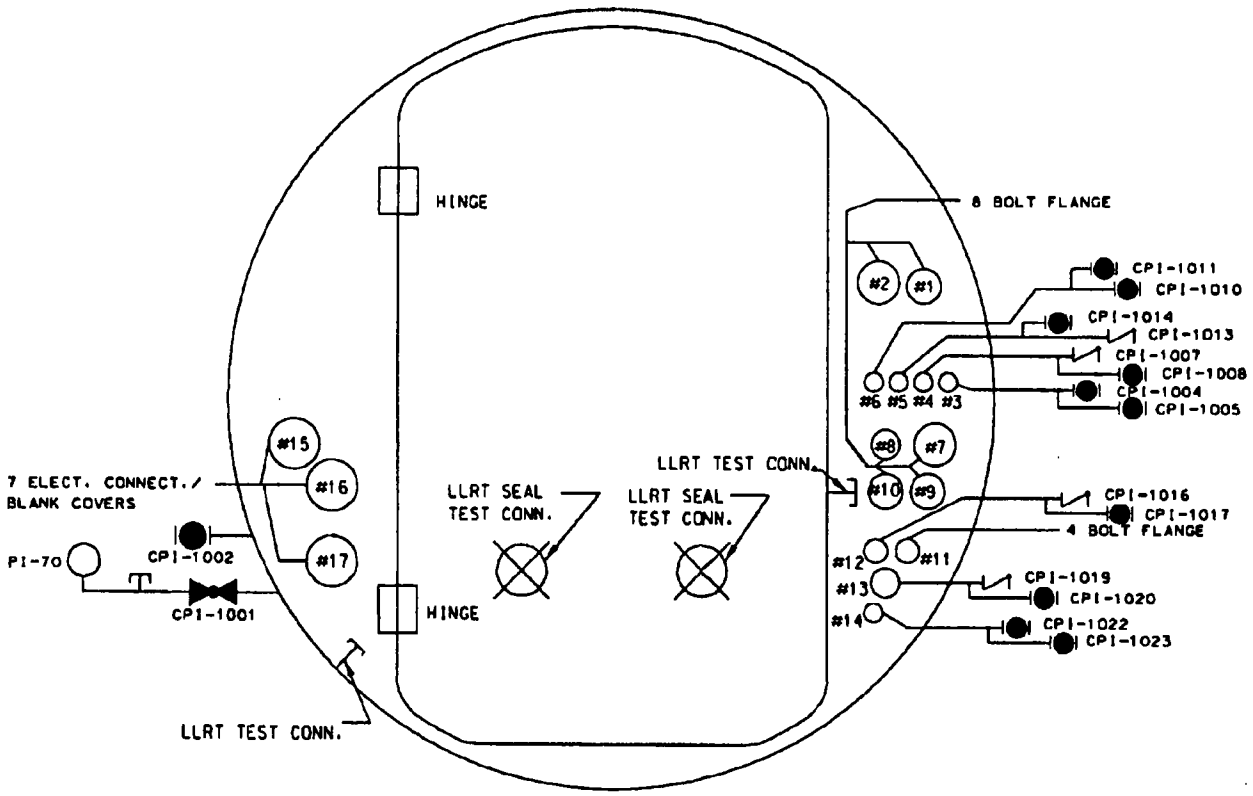

CONTAINMENT OUTAGE DOOR

(View is from Butler Building side.)

The Containment Outage Door (COD) can **NOT** be used for ANY closure requirements during Severe Weather conditions.

6.1 MECHANICAL PENETRATION CHECKS (Continued)

CONTAINMENT OUTAGE DOOR (continued)

CAUTION
Butler Building side Blank Flanges can **NOT** be used to meet closure requirements.

a. CONTAINMENT OUTAGE DOOR ALIGNMENT

VALVE	POSITION	LOCATION	INITIALS
PENETRATION #1	BLANK FLANGE INSTALLED	CNTMT SIDE ON COD FRAME	
PENETRATION #2	BLANK FLANGE INSTALLED	CNTMT SIDE ON COD FRAME	
PENETRATION #7	BLANK FLANGE INSTALLED	CNTMT SIDE ON COD FRAME	
PENETRATION #8	BLANK FLANGE INSTALLED	CNTMT SIDE ON COD FRAME	
PENETRATION #9	BLANK FLANGE INSTALLED	CNTMT SIDE ON COD FRAME	
PENETRATION #10	BLANK FLANGE INSTALLED	CNTMT SIDE ON COD FRAME	
PENETRATION #11	BLANK FLANGE INSTALLED	CNTMT SIDE ON COD FRAME	
PENETRATION #15 ELECT. CONNECT. /BLANK COVERS 7 TOTAL (Circle method used)	INSTALLED	CNTMT SIDE ON COD FRAME	

6.1 MECHANICAL PENETRATION CHECKS (Continued)

CONTAINMENT OUTAGE DOOR (continued)

VALVE	POSITION	LOCATION	INITIALS
PENETRATION #16 ELECT. CONNECT. /BLANK COVERS 7 TOTAL (Circle method used)	INSTALLED	CNTMT SIDE ON COD FRAME	
PENETRATION #17 ELECT. CONNECT. /BLANK COVERS 7 TOTAL (Circle method used)	INSTALLED	CNTMT SIDE ON COD FRAME	
CNTMT SIDE LLRT TEST CONNECTION	CAPPED	CNTMT SIDE COD ON TRANSITION RING NEAR PENETRATION #17	
DOOR OPERATOR LLRT TEST CONNECTION FITTING 2 TOTAL	INSTALLED	CNTMT SIDE ON OPERATOR SHAFT ONE FITTING ON EACH OPERATOR	
CNTMT SIDE DOOR OPERATORS 2 TOTAL	INSTALLED	CNTMT SIDE MAIN DOORWAY	

6.1 MECHANICAL PENETRATION CHECKS (Continued)

CONTAINMENT OUTAGE DOOR (continued)

VALVE	POSITION	LOCATION	INITIALS
BUT. BLDG SIDE DOOR OPERATORS 2 TOTAL	INSTALLED	BUT. BLDG SIDE MAIN DOORWAY	
BUT. BLDG SIDE LLRT TEST CONNECTION	CAPPED	BUT. BLDG SIDE COD ON DOOR FRAME NEAR PENETRATION #10	
2-CPI-1001 GAUGE ISOLATION	SHUT	BUT. BLDG SIDE COD ON TRANS. RING NEAR PENETRATION #17	
2-CPI-1002 EQUALIZING VLV	SHUT (1)	BUT. BLDG SIDE COD ON TRANS. RING NEAR PENETRATION #16	

(1) Due to pressure concerns associated with the enclosed space, when the Containment Outage Door is closed and the Containment Equipment Hatch is installed, Equalizing Valve, 2-CPI-1002 is required to be open **PER** DOOR-1, OPENING AND CLOSING OF CONTAINMENT OUTAGE DOOR or HE-46, EQUIPMENT ACCESS DOOR REMOVAL AND INSTALLATION. The Containment Outage Door can **NOT** be used for Closure requirements if Equalizing Valve, 2-CPI-1002 is open.

6.1 MECHANICAL PENETRATION CHECKS (Continued)

CONTAINMENT OUTAGE DOOR (continued)

NOTE
The previous block verification steps are always completed in conjunction with **EITHER** step below.

CAUTION
IF the Containment Outage Door is being verified to comply with no SDC Loop operable or in operation **PER** TS ACTIONS 3.9.4.A **OR** 3.9.5.B,
THEN the Containment Outage Door **SHALL** be shut. Verification **CANNOT** be N/A'd.

- Containment Outage Door is FULLY DOGGED SHUT.
  (N/A if performing step below for Refueling Containment Closure) _____

OR

- During Refueling Containment Closure the Containment Outage Door may remain OPEN **IF** the following is verified:
  (N/A if the Containment Outage Door **IS** shut **PER** step above)

  (1) The Containment Outage Door is OPERABLE as demonstrated by: _____

NOTE
Floor grating may be installed if administrative controls are in place to enable the removal of the grating and fully dogging shut the Containment Outage Door in less than 30 minutes.

- the door is unblocked
- no hoses or cables are run through the door
- capable of being fully dogged shut

(2) There is greater than 23 feet of water above the fuel,

_____ (greater than 56.7 ft)
RFP LEVEL _____

(3) A designated individual is continuously stationed immediately outside the Containment Outage Door to shut and fully dog the door. _____

6.1 MECHANICAL PENETRATION CHECKS (Continued)

CONTAINMENT OUTAGE DOOR (continued)

b. CONTAINMENT OUTAGE DOOR PENETRATION ALIGNMENTS

COD PENETRATION #3 SLUICE RIG

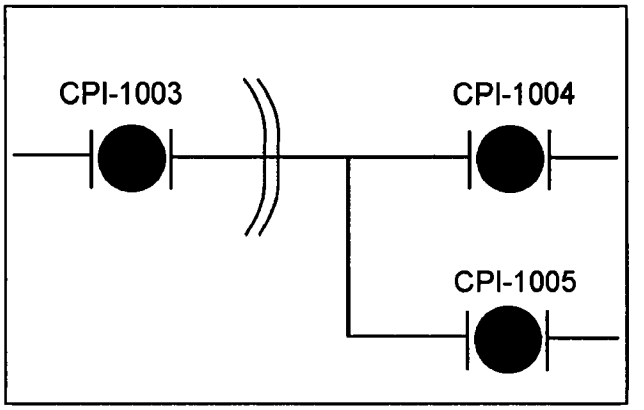

VALVE	POSITION	LOCATION	INITIALS
2-CPI-1004	LOCKED SHUT	BUTLER BLDG. SIDE COD FRAME	
2-CPI-1005	LOCKED SHUT	BUTLER BLDG. SIDE COD FRAME	

OR

2-CPI-1003	LOCKED SHUT	CNTMT SIDE COD FRAME	

OR

NOTE
SG Sluice hoses connected between a COD penetration and a SG with inside closure may be considered a closed system (i.e., SG aligned per Attach 3 or Attach 4).

System installed as a closed system.	

6.1 MECHANICAL PENETRATION CHECKS (Continued)

CONTAINMENT OUTAGE DOOR (continued)

COD PENETRATION #4 AIR SERVICE

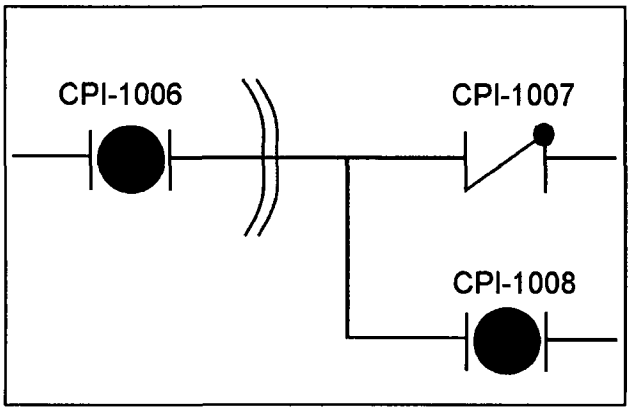

VALVE	POSITION	LOCATION	INITIALS
2-CPI-1007	INSTALLED	BUTLER BLDG. SIDE COD FRAME	
2-CPI-1008	LOCKED SHUT	BUTLER BLDG. SIDE COD FRAME	

OR

2-CPI-1006	LOCKED SHUT	CNTMT SIDE COD FRAME	

6.1 MECHANICAL PENETRATION CHECKS (Continued)

CONTAINMENT OUTAGE DOOR (continued)

COD PENETRATION #5 WATER SERVICE

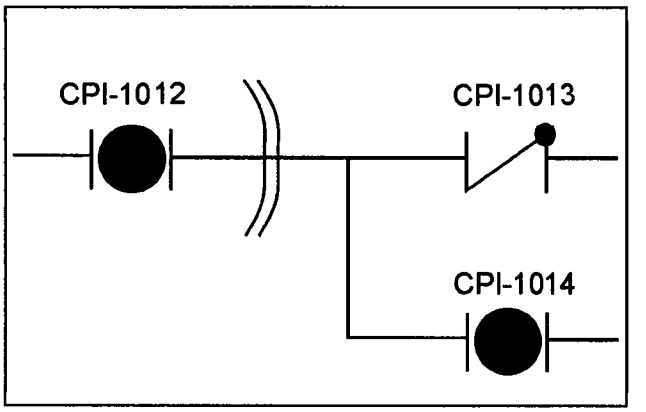

VALVE	POSITION	LOCATION	INITIALS
2-CPI-1013	INSTALLED	BUTLER BLDG. SIDE COD FRAME	
2-CPI-1014	LOCKED SHUT	BUTLER BLDG. SIDE COD FRAME	

OR

2-CPI-1012	LOCKED SHUT	CNTMT SIDE COD FRAME	

6.1 MECHANICAL PENETRATION CHECKS (Continued)

CONTAINMENT OUTAGE DOOR (continued)

COD PENETRATION #6 SLUDGE LANCING RETURN

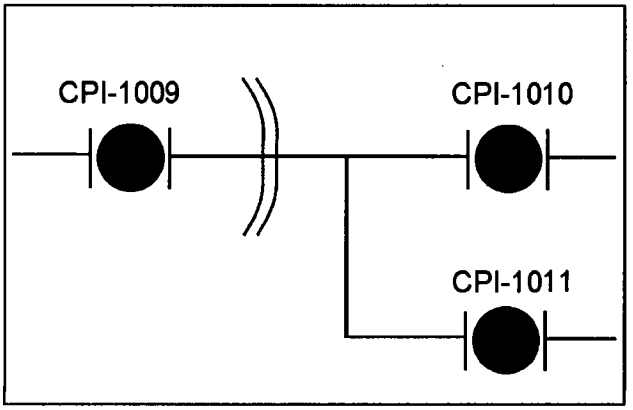

VALVE	POSITION	LOCATION	INITIALS
2-CPI-1010	LOCKED SHUT	BUTLER BLDG. SIDE COD FRAME	
2-CPI-1011	LOCKED SHUT	BUTLER BLDG. SIDE COD FRAME	

OR

2-CPI-1009	LOCKED SHUT	CNTMT SIDE COD FRAME	

OR

Sludge Lancing Return installed as a closed system.	

6.1 MECHANICAL PENETRATION CHECKS (Continued)

CONTAINMENT OUTAGE DOOR (continued)

COD PENETRATION #12 Miscellaneous Supply

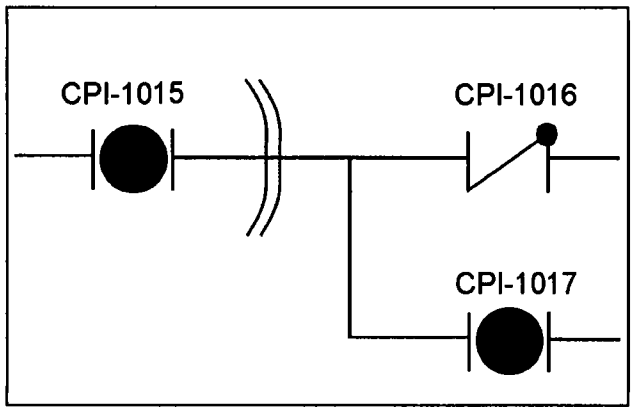

VALVE	POSITION	LOCATION	INITIALS
2-CPI-1016	INSTALLED	BUTLER BLDG. SIDE COD FRAME	
2-CPI-1017	LOCKED SHUT	BUTLER BLDG. SIDE COD FRAME	

OR

2-CPI-1015	LOCKED SHUT	CNTMT SIDE COD FRAME	

6.1 MECHANICAL PENETRATION CHECKS (Continued)

CONTAINMENT OUTAGE DOOR (continued)

COD PENETRATION #13 SLUDGE LANCING SUPPLY

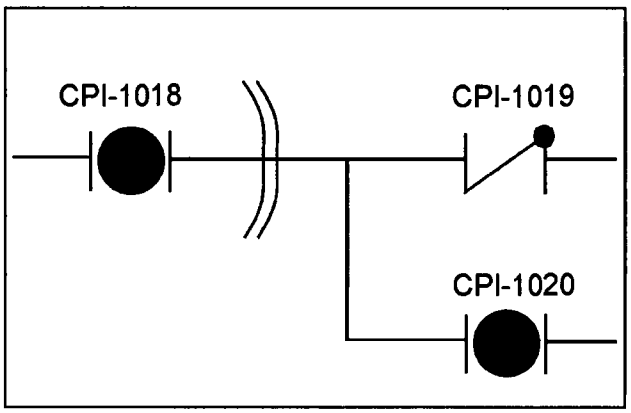

VALVE	POSITION	LOCATION	INITIALS
2-CPI-1019	INSTALLED	BUTLER BLDG. SIDE COD FRAME	
2-CPI-1020	LOCKED SHUT	BUTLER BLDG. SIDE COD FRAME	

OR

2-CPI-1018	LOCKED SHUT	CNTMT SIDE COD FRAME	

6.1 MECHANICAL PENETRATION CHECKS (Continued)

CONTAINMENT OUTAGE DOOR (continued)

COD PENETRATION #14 MISCELLANEOUS

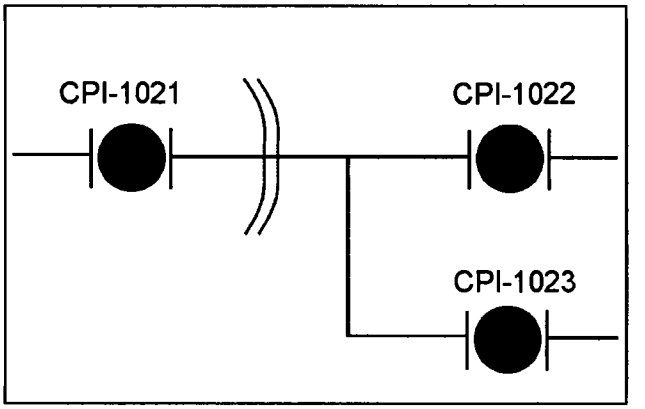

VALVE	POSITION	LOCATION	INITIALS
2-CPI-1022	LOCKED SHUT	BUTLER BLDG. SIDE COD FRAME	
2-CPI-1023	LOCKED SHUT	BUTLER BLDG. SIDE COD FRAME	

OR

2-CPI-1021	LOCKED SHUT	CNTMT SIDE COD FRAME	

OR

NOTE
SG Sluice hoses connected between a COD penetration and a SG with inside closure may be considered a closed system (i.e., SG aligned per Attach 3 or Attach 4).

System installed as a closed system.	

6.1 MECHANICAL PENETRATION CHECKS (Continued)

69' CONTAINMENT PERSONNEL AIRLOCK

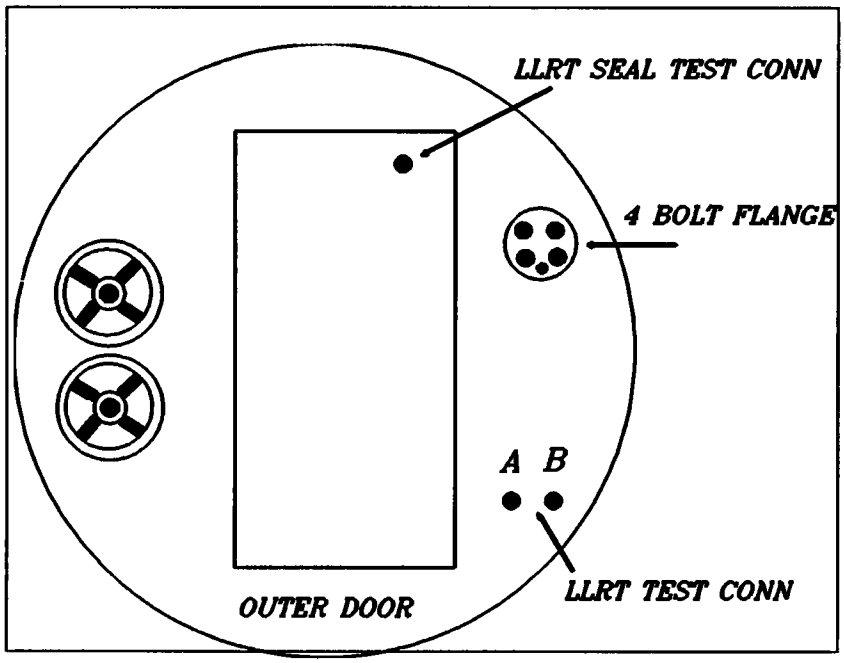

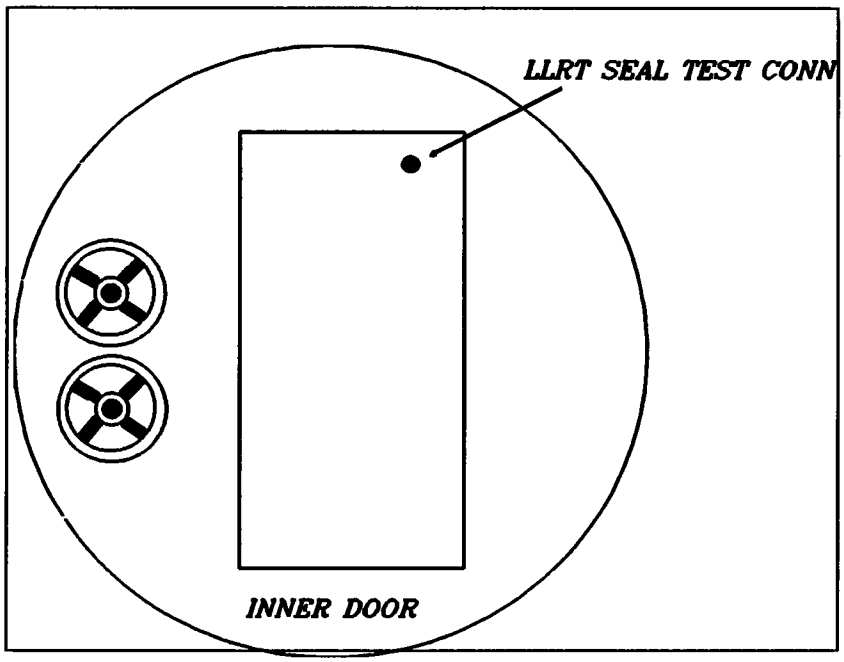

6.1 MECHANICAL PENETRATION CHECKS (Continued)

69' CONTAINMENT PERSONNEL AIRLOCK (continued)

OUTSIDE CONTAINMENT ALIGNMENT

03406

VALVE	POSITION	LOCATION	INITIALS
OUTER DOOR LLRT TEST CONNECTION A	CAPPED		
OUTER DOOR LLRT TEST CONNECTION B	CAPPED		
FOUR BOLT FLANGE	INSTALLED WITH PLUG INSTALLED		

NOTE

The previous block verification steps are always completed in conjunction with step a. **OR** step b. below.

CAUTION

IF the Personnel Airlock is being verified to comply with no SDC Loop operable **OR** in operation **PER** TS ACTIONS 3.9.4.A **OR** 3.9.5.B,
THEN at least one door **SHALL** be shut. Verification **CANNOT** be N/A'd.

a. At least one door (and its equalizing valve) is SHUT.
(N/A if performing step b., below, for Refueling Containment Closure) _____

OR

6.1 MECHANICAL PENETRATION CHECKS (Continued)

69' CONTAINMENT PERSONNEL AIRLOCK (continued)

b. During Refueling Containment Closure both doors may remain OPEN **IF** the following is verified:
(N/A if one door **IS** shut **PER** step a.)

(1) One Personnel Airlock door is OPERABLE as demonstrated by:

- one door (and its equalizing valve) is capable of being closed
- that same door is unblocked
- no hoses or cables are run through the airlock

OUTER/INNER DOOR OPERABLE
(CIRCLE ONE) _____

(2) There is greater than 23 feet of water above the fuel,

_____ (greater than 56.7 ft)
RFP LEVEL _____

(3) A designated individual is continuously stationed immediately outside the airlock to close the door. _____

6.1 MECHANICAL PENETRATION CHECKS (Continued)

CONTAINMENT EMERGENCY AIRLOCK

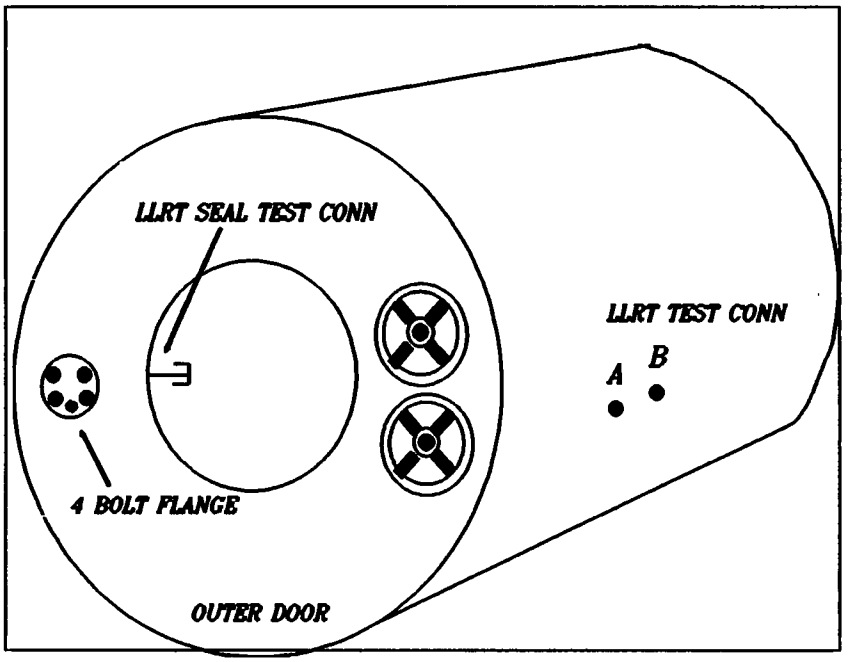

NOTE
To gain outside access to the EAL Building for the following verification, keys must be obtained from Security and RADCON.

OUTSIDE CONTAINMENT ALIGNMENT

VALVE	POSITION	LOCATION	INITIALS
OUTER DOOR LLRT SEAL TEST CONNECTION	CAPPED		
LLRT TEST CONNECTION A	CAPPED		
LLRT TEST CONNECTION B	CAPPED		
FOUR BOLT FLANGE	INSTALLED WITH PLUG INSTALLED		

6.1 MECHANICAL PENETRATION CHECKS (Continued)

CONTAINMENT EMERGENCY AIRLOCK (continued)

NOTE

- The Temporary Door requires an NO-1-114 Containment Closure Deviation. **[B0330]**
- Step a **OR** b is ALWAYS completed in conjunction with the previous block verification steps.

CAUTION

IF the Emergency Air Lock is being verified to comply with no SDC Loop operable **OR** in operation **PER** TS ACTIONS 3.9.4.A **OR** 3.9.5.B,
THEN at least one door **SHALL** be shut. Verification **CANNOT** be N/A'd.

a. The outside Emergency Air Lock door **AND** its equalizing valve are **SHUT.** (N/A if performing EAL Temporary Door checks) _____

OR

b. **IF** the Temporary Door is to be credited for Containment Closure, **THEN VERIFY** the following: (N/A if performing EAL Door checks)

(1) EAL Temporary Door installed **PER** PAL-3, INSTALLATION OF TEMPORARY DOOR ON EMERGENCY PERSONNEL AIRLOCK.

_____
MECHANICAL MAINTENANCE SUPERVISOR

(2) Any penetrations installed **PER** EAL-1, PENETRATION OF TEMPORARY DOOR ON EMERGENCY PERSONNEL AIRLOCK.

_____
MECHANICAL MAINTENANCE SUPERVISOR

6.1 MECHANICAL PENETRATION CHECKS (Continued)

CONTAINMENT EMERGENCY AIRLOCK (continued)

NOTE
When ATTACHMENT 3 **OR** ATTACHMENT 4 is being completed for the SG closed to the CNTMT atmosphere, the SG fill hose connected between the SG Sluice Rig and the Temporary Door in the CNTMT **AND** from the Temporary Door to the DI Water Storage Tank may be considered a closed system, if pressurized.

(3) Each penetration through the door is: _____

- capped

OR

- connected to a closed system

OR

- isolated at the penetration

(4) Outer door equalizing valve is shut. _____

(5) **INSTALL** GREEN CHAIN barriers at the EAL on the inside **AND** outside hatches to prevent unauthorized entry in the area. (N/A if **NOT** in Restricted Containment Closure conditions) _____

- Signs shall be posted stating that OWC permission is required to enter. _____

(6) All manual valves associated with pipe penetrations through the temporary door are tagged **PER** NO-1-114, Section titled, Restricted Containment Closure Conditions.
(N/A if **NOT** in Restricted Containment Closure conditions) _____

INSIDE CONTAINMENT ALIGNMENT

The inside Emergency Air Lock door **AND** its equalizing valve are SHUT.	

6.2 ELECTRICAL PENETRATION CHECKS

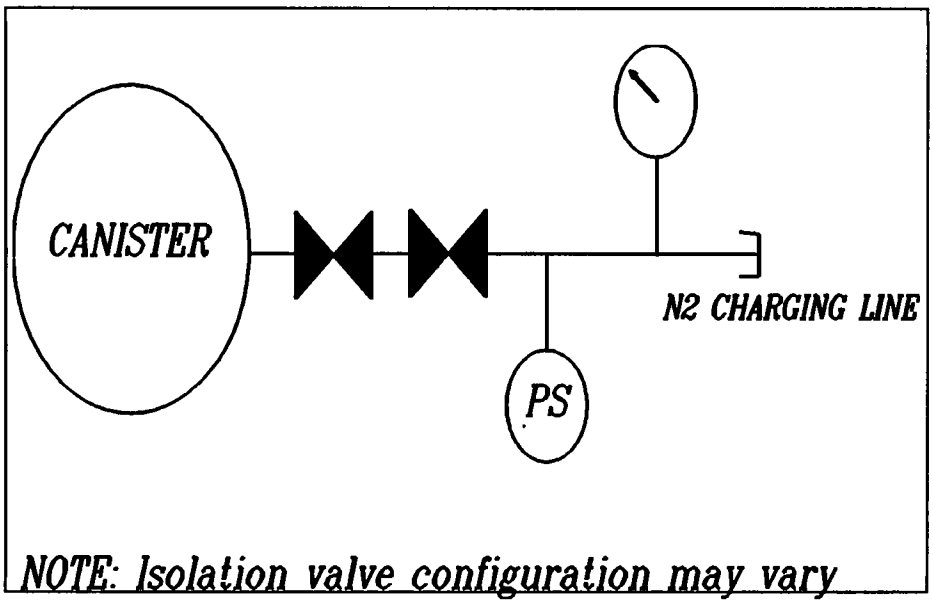

NOTE
Pressurization of an Electrical Penetration Canister is **NOT** required to meet Containment Closure.

a. **VERIFY** the Electrical Penetration Canisters by: **[B0333]**

- CHECKING the canister is pressurized **OR** PRESSURIZING the canister **PER** OI-4.

OR

- VISUALLY VERIFYING the canister is installed, with Engineering support

b. **INDICATE** that the above requirements are satisfied by initialing for each penetration.

6.2 ELECTRICAL PENETRATION CHECKS (Continued)

45' West Electrical Penetration Room

CANISTER DESIGNATION	INITIALS	CANISTER DESIGNATION	INITIALS
2ZWA1		2ZWD4	
2ZWA3		2ZWD5	
2ZWA6		2ZWD6	
2ZWA8		2ZWD7	
2ZWB1		2ZWD8	
2ZWB2		2ZWD9	
2ZWB7		2ZWE1	
2ZWB8		2ZWE2	
2ZWC1		2ZWE3	
2ZWC3		2ZWE4	
2ZWC4		2ZWE5	
2ZWC6		2ZWE6	
2ZWC9		2ZWE7	
2ZWD1		2ZWE8	
2ZWD2		2ZWE9	
2ZWD3			

6.2 ELECTRICAL PENETRATION CHECKS (Continued)

45' East Electrical Penetration Room

CANISTER DESIGNATION	INITIALS	CANISTER DESIGNATION	INITIALS
2ZEA2		2ZED1	
2ZEA4		2ZED2	
2ZEA5		2ZED3	
2ZEA7		2ZED4	
2ZEA9		2ZED5	
2ZEB1		2ZED6	
2ZEB2		2ZED7	
2ZEB3		2ZED8	
2ZEB4		2ZEE1	
2ZEB5		2ZEE2	
2ZEB6		2ZEE3	
2ZEC1		2ZEE4	
2ZEC2		2ZEE5	
2ZEC4		2ZEE6	
2ZEC6		2ZEE7	
2ZEC7		2ZEE8	
2ZEC9		2ZEE9	

6.3 21 STEAM GENERATOR CHECKS **INITIALS**

INDICATE the current 21 Steam Generator status and isolation requirements: (check one)

_____ SRO

☐ 21 Steam Generator is open to the Containment atmosphere: **PERFORM** ATTACHMENT 1.

☐ 21 Steam Generator is closed to the Containment atmosphere: **PERFORM** ATTACHMENT 3.

6.4 22 STEAM GENERATOR CHECKS

INDICATE the current 22 Steam Generator status and isolation requirements: (check one)

_____ SRO

☐ 22 Steam Generator is open to the Containment atmosphere: **PERFORM** ATTACHMENT 2.

☐ 22 Steam Generator is closed to the Containment atmosphere: **PERFORM** ATTACHMENT 4.

6.5 ACCEPTANCE CRITERIA

INITIALS

NOTE

- Performance of this section constitutes a supervisory review. Actual observation of equipment response by the SRO performing this review is not required. Answering YES to a step signifies the referenced step has been completed and signed off by a qualified operator **other than the SRO reviewer** and the actual equipment response is acceptable and valid.
- **IF** performing this test in Mode 5 for the non-T.S. Surveillance, verification of Containment Closure status **PER** NO-1-114,
  THEN A through E shall be marked N/A and F and G shall be performed instead.
- **IF** solely performing Post Maintenance or Operability Verification,
  THEN Steps A through H shall be marked N/A and Step I shall be performed, otherwise mark Step I N/A.

A. Were all mechanical penetrations in Section 6.1 aligned **OR** controlled by a NO-1-112 tagout or MD-1-100 TEMP ALT, to provide Containment Closure?

YES / NO / N/A (circle one) _____ SRO

B. Were all electrical penetrations aligned to provide Containment Closure in Section 6.2, **OR** controlled by a MD-1-100 TEMP ALT to provide Containment Closure?

YES / NO / N/A (circle one) _____ SRO

C. Was 21 Steam Generator verified to be in the required configuration, **OR** controlled by a NO-1-112 tagout or MD-1-100 TEMP ALT to provide Containment Closure, as indicated by completion of ATTACHMENT 1 or ATTACHMENT 3?

YES / NO / N/A (circle one) _____ SRO

D. Was 22 Steam Generator verified to be in the required configuration, **OR** controlled by a NO-1-112 tagout or MD-1-100 TEMP ALT to provide Containment Closure, as indicated by completion of ATTACHMENT 2 or ATTACHMENT 4?

YES / NO / N/A (circle one) _____ SRO

6.5 ACCEPTANCE CRITERIA (Continued) **INITIALS**

E. This test is considered satisfactory and Containment Closure is established, if YES was answered in the steps above.

YES / NO / N/A (circle one) _____ SRO

1. **IF** not,
THEN NOTIFY the SM, **DECLARE** the affected equipment inoperable and **TAKE** actions as required by Technical Specifications and administrative actions stated in EN-4-104.

2. **INITIATE** a Condition Report for all equipment deficiencies.

NOTE
IF verification is for Refueling Containment Closure, **OR** no SDC Loop operable **OR** in operation **PER** T.S.s, the following steps shall be marked N/A.

F. Were all penetrations in Section 6.1 or 6.2 aligned **OR** controlled to provide Containment Closure by a NO-1-112 tagout, MD-1-100 TEMP ALT, **OR** tracked in the Containment Deviation Log **PER** NO-1-114?

YES / NO / N/A (circle one) _____ SRO

G. Were 21 and 22 Steam Generators verified to be in the required configuration of ATTACHMENT 1 or ATTACHMENT 3 **AND** ATTACHMENT 2 or ATTACHMENT 4, respectively, to provide Containment Closure **OR** controlled by a NO-1-112 tagout, MD-1-100 TEMP ALT, **OR** tracked in the Containment Deviation Log **PER** NO-1-114?

YES / NO / N/A (circle one) _____ SRO

6.5 ACCEPTANCE CRITERIA (Continued) **INITIALS**

H. This test is considered satisfactory **AND** NO-1-114 Containment Closure is established if YES was answered in F and G, above.

YES / NO / N/A (circle one) _____ SRO

1. **IF** not,
THEN NOTIFY the SM, **ENSURE** each Deviation is recorded in the Containment Deviation Log **PER** NO-1-114 **AND ENSURE** each new deviation has been evaluated for impact on Higher Risk Evolutions **PER** NO-1-114.

2. **INITIATE** a Condition Report for equipment found out of alignment from this procedure, a current NO-1-112 tagout, or current NO-1-114 Containment Deviation Log entry.

6.5 ACCEPTANCE CRITERIA (Continued) **INITIALS**

I. This test is considered satisfactory **AND** NO-1-114 Containment Closure is established if the applicable penetration(s) meet at least one of the following criteria:

- Aligned or in the required configuration **PER** this procedure
- Controlled by a NO-1-112 tagout to provide Containment Closure
- Controlled by a MD-1-100 TEMP ALT to provide Containment Closure
- **IF** performing this test while in Mode 5 or 6 for the non-T.S. Surveillance, verification of Containment Closure status **PER** NO-1-114,
  THEN the penetration is tracked in the Containment Deviation Log **PER** NO-1-114.

YES / NO / N/A (circle one) _____ SRO

1. **IF** not, **AND** performing this test while in Refueling Containment Closure, **OR** no SDC Loop operable **OR** in operation **PER** T.S.s,
   THEN NOTIFY the SM, **DECLARE** the affected equipment inoperable and **TAKE** actions as required by Technical Specifications and administrative actions stated in EN-4-104.

2. **IF** not, **AND** performing this test while in Mode 5 or 6 for the non-T.S. Surveillance, verification of Containment Closure status **PER** NO-1-114,
   THEN NOTIFY the SM, **ENSURE** each Deviation is recorded in the Containment Deviation Log **PER** NO-1-114 **AND ENSURE** each new deviation has been evaluated for impact on Higher Risk Evolutions **PER** NO-1-114.

7.0 POST PERFORMANCE ACTIVITIES

INITIALS

PERFORM a post-test page check of this test. _____

8.0 BASES

[B0306] LER 89-22, compensatory measures to ensure both HP-6900-MOV and HP-6901-MOV are shut during core alterations (movement of irradiated fuel assemblies within containment).

[B0330] Bases designed to prevent Temp. Door installation in place of an Airlock Door unless the RFP is flooded or RCS is capable of being pressurized and SGs available for heat removal **PER** controls of NO-1-114.

[B0331] Safety Screening for MCR 92-069-001-01, retiring O-WGS-690 in place due to inaccessibility.

[B0332] June 5, 1992 letter from B.D. Mann, via B.S. Montgomery to M.G. Polak concerning BGE & NRC agreement that the (4) bolts requirement provides T.S. 3.9.4. Containment Closure against Mode 5 and Mode 6 accidents. Letter also deleted LLRT test requirement.

[B0333] GL 88-17, "LOSS OF DECAY HEAT REMOVAL," identified that STP did not verify Elec. Pen. canisters installed in Mode 6. Became POSRC OI-91-104-07.

[B0334] J.L.Marsala letter to GS-NPO, Requirements for Containment Closure During Lower Modes (5, 6, and Refueling), Local LLRT results correlation to whether or not a valve can be used for Containment Closure.

9.0 RECORDS

A. Records generated by this procedure shall be captured and controlled. Prior to transferring records to Document Management for retention, legibility and completeness of the record shall be verified by the transmitting organization.

B. Maintain records as defined in EN-4-104, Surveillance Testing.

ATTACHMENT 1

21 STEAM GENERATOR OPEN TO CONTAINMENT ATMOSPHERE

CAUTION
Obtain permission from the Control Room Supervisor prior to repositioning any valve in this alignment.

Main Steam Penetration Room

VALVE	DESCRIPTION	NOTE	POSITION	INITIALS
2-FW-4516-MOV	21 S/G FW ISOL	(1)	SHUT	
2-MS-101	21 S/G ATMOS DUMP ISOL	(1)	SHUT	
2-MS-3992-RV	21 S/G MS RV		INSTALLED	
2-MS-3993-RV	21 S/G MS RV		INSTALLED	
2-MS-3994-RV	21 S/G MS RV		INSTALLED	
2-MS-3995-RV	21 S/G MS RV		INSTALLED	
2-MS-3996-RV	21 S/G MS RV		INSTALLED	
2-MS-3997-RV	21 S/G MS RV		INSTALLED	
2-MS-3998-RV	21 S/G MS RV		INSTALLED	
2-MS-3999-RV	21 S/G MS RV		INSTALLED	

(1) **IF NOT** controlled by NO-1-112,
THEN LOG in the Locked Valve Deviation Log

ATTACHMENT 1

21 STEAM GENERATOR OPEN TO CONTAINMENT ATMOSPHERE

CAUTION
Obtain permission from the Control Room Supervisor prior to repositioning any valve in this alignment.

Main Steam Penetration Room

VALVE	DESCRIPTION	NOTE	POSITION	INITIALS
2-MS-337	21 SG SUPP ISOL TO AFW PPS	(1)	SHUT	
2-MS-336	21 SG EQUAL ISOL TO AFW PP		SHUT	
2-MS-1003	PT-3991 HDR ISOL	(1)	SHUT	
2-MS-4045-MOV	21 MSIV BYPASS		SHUT	
2-MS-4043-CV	21 MSIV	(2)	SHUT	
2-IA-929	IA ROOT STOP 21 MSIV HYD	(1)(6)	SHUT	
2-MSH-101	21 MSIV ACT "A" DRN MANIFOLD ISOL	(6)	OPEN	
2-MSH-102	21 MSIV ACT "B" DRN MANIFOLD ISOL	(6)	OPEN	
2-MSH-4042A-SV **OR** 2-MSH-4042B-SV	21 MSIV DUMP SV CHANNEL A DUMP SOLENOID STEM NUT **OR** 21 MSIV DUMP SV CHANNEL B DUMP SOLENOID STEM NUT	(1) (5)(6) (1) (5)(6)	5 TURNS OPEN IN THE CLOCKWISE DIRECTION	

(1) **IF NOT** controlled by NO-1-112,
THEN LOG in the Locked Valve Deviation Log

(2) If actuator is removed, then verify bottom of stem guide is adjacent to white mark on valve yoke (refer to Attachment 6)

(5) The Dump Solenoid Valve Cap must be removed to attain access to the Solenoid Stem nut. **CIRCLE** the DUMP SV used.

(6) May be N/A'd if MSIV actuator is removed.

ATTACHMENT 1

21 STEAM GENERATOR OPEN TO CONTAINMENT ATMOSPHERE

CAUTION
Obtain permission from the Control Room Supervisor prior to repositioning any valve in this alignment.

27' East Penetration Room

VALVE	DESCRIPTION	NOTE	POSITION	INITIALS
2-PS-102	21 S/G SURFACE SMPL ISOL	(1)	SHUT	
2-PS-101	21 S/G BOTTOM SMPL ISOL	(1)	SHUT	
2-AFW-156	21 S/G AFW LINE DRN		SHUT	
2-AFW-1063	LOCAL SAMPLE DRN		SHUT	
2-AFW-171	21 S/G AFW CV BYP DRN		SHUT	
2-AFW-1059	4521B-PT ROOT	(1)	SHUT	
2-AFW-1019	4521A-PT ROOT	(1)	SHUT	
2-AFW-163	21 S/G AFW BYPASS		SHUT	
2-AFW-162	21 S/G AFW STOP	(1)	SHUT	
2-AFW-4511-CV	AFW TO 21 S/G ISOL		INSTALLED	
2-AFW-199	23 AFW PUMP 21 S/G CKV		INSTALLED	

(1) **IF NOT** controlled by NO-1-112,
THEN LOG in the Locked Valve Deviation Log

ATTACHMENT 1

21 STEAM GENERATOR OPEN TO CONTAINMENT ATMOSPHERE

CAUTION
Obtain permission from the Control Room Supervisor prior to repositioning any valve in this alignment.

27' East Penetration Room

VALVE	DESCRIPTION	NOTE	POSITION	INITIALS
2-BD-4010-CV	21 S/G SURFACE B/D ISOL	(1)(4)	SHUT	
AND				
2-PS-102, 2-PS-127, **OR** 2-PS-128	21 S/G SURFACE B/D SMPL ISOL	(1)(4)	SHUT	
- - - - - - - -	- - - - - - - - - - - - - - - - - -		- - - - -	- - - -
OR				
2-BD-191	21 S/G SURFACE B/D ISOL	(1)	SHUT	
OR				
2-BD-192	21 S/G SURFACE B/D B/U ISOL	(1)	SHUT	
2-BD-4011-CV	21 S/G BOTTOM B/D ISOL	(1)(4)	SHUT	
AND				
2-PS-101, 2-PS-125, **OR** 2-PS-126	21 S/G BOTTOM B/D SMPL ISOL	(1)(4)	SHUT	
- - - - - - - -	- - - - - - - - - - - - - - - - - -		- - - - -	- - - -
OR				
2-BD-187	21 S/G BOTTOM B/D ISOL	(1)(3)	SHUT	
OR				
2-BD-188	21 S/G BOTTOM B/D ISOL	(1)(3)	SHUT	

(1) **IF NOT** controlled by NO-1-112,
THEN LOG in the Locked Valve Deviation Log

(3) Valve is located on the 12' of U-2 CNTMT.

(4) The CV **AND** at least ONE Sample valve are verified together **OR** at least ONE valve below the dotted line must be verified.

ATTACHMENT 1

21 STEAM GENERATOR OPEN TO CONTAINMENT ATMOSPHERE

CAUTION
Obtain permission from the Control Room Supervisor prior to repositioning any valve in this alignment.

12' Behind Sample Sink

VALVE	DESCRIPTION	NOTE	POSITION	INITIALS
2-MS-156	2-DR-6 STAND PIPE DRN		SHUT	
2-MS-299	2-DR-6 STAND PIPE VENT		SHUT	
2-MS-6612-MOV	2-DR-6 ISOL		SHUT	
2-MS-635	2-MS-6604 LS ISOL	(1)	SHUT	
2-MS-636	2-MS-6604 LS ISOL	(1)	SHUT	

Service Water Room

VALVE	DESCRIPTION	NOTE	POSITION	INITIALS
2-AFW-195	4525-CV BYPASS		SHUT	
2-AFW-197	4525-CV INLET	(1)	SHUT	
2-AFW-4525-CV	23 AFW TO 21 S/G FLOW CONTROL		INSTALLED	

27' Turbine Building

VALVE/BKR	DESCRIPTION	NOTE	POSITION	INITIALS
52-21804	2-MS-6612-MOV BKR	(1)	OFF	

(1) **IF NOT** controlled by NO-1-112,
THEN LOG in the Locked Valve Deviation Log

ATTACHMENT 2

22 STEAM GENERATOR OPEN TO THE CONTAINMENT ATMOSPHERE

CAUTION
Obtain permission from the Control Room Supervisor prior to repositioning any valve in this alignment.

Main Steam Penetration Room

VALVE	DESCRIPTION	NOTE	POSITION	INITIALS
2-FW-4517-MOV	22 S/G FW ISOL	(1)	SHUT	
2-MS-104	22 S/G ATMOS DUMP ISOL	(1)	SHUT	
2-MS-4000-RV	22 S/G MS RV		INSTALLED	
2-MS-4001-RV	22 S/G MS RV		INSTALLED	
2-MS-4002-RV	22 S/G MS RV		INSTALLED	
2-MS-4003-RV	22 S/G MS RV		INSTALLED	
2-MS-4004-RV	22 S/G MS RV		INSTALLED	
2-MS-4005-RV	22 S/G MS RV		INSTALLED	
2-MS-4006-RV	22 S/G MS RV		INSTALLED	
2-MS-4007-RV	22 S/G MS RV		INSTALLED	

(1) **IF NOT** controlled by NO-1-112,
THEN LOG in the Locked Valve Deviation Log

ATTACHMENT 2

22 STEAM GENERATOR OPEN TO THE CONTAINMENT ATMOSPHERE

CAUTION
Obtain permission from the Control Room Supervisor prior to repositioning any valve in this alignment.

Main Steam Penetration Room

VALVE	DESCRIPTION	NOTE	POSITION	INITIALS
2-MS-251	22 SG SUPP ISOL TO AFW PPS	(1)	SHUT	
2-MS-252	22 SG EQUAL ISOL TO AFW PP		SHUT	
2-MS-1001	PT-4008 HDR ISOL	(1)	SHUT	
2-MS-4052-MOV	22 MSIV BYPASS		SHUT	
2-MS-4048-CV	22 MSIV	(2)	SHUT	
2-IA-931	IA ROOT STOP 22 MSIV HYD	(1)(6)	SHUT	
2-MSH-104	22 MSIV ACT "A" DRN MANIFOLD ISOL	(6)	OPEN	
2-MSH-105	22 MSIV ACT "B" DRN MANIFOLD ISOL	(6)	OPEN	
2-MSH-4047A-SV OR 2-MSH-4047B-SV	22 MSIV DUMP SV CHANNEL A DUMP SOLENOID STEM NUT OR 22 MSIV DUMP SV CHANNEL B DUMP SOLENOID STEM NUT	(1) (5)(6) (1) (5)(6)	5 TURNS OPEN IN THE CLOCKWISE DIRECTION	

(1) **IF NOT** controlled by NO-1-112,
THEN LOG in the Locked Valve Deviation Log

(2) If actuator is removed, then verify bottom of stem guide is adjacent to white mark on valve yoke (refer to Attachment 6)

(5) The Dump Solenoid Valve Cap must be removed to attain access to the Solenoid Stem nut. **CIRCLE** the DUMP SV used.

(6) May be N/A'd if MSIV actuator is removed.

ATTACHMENT 2

22 STEAM GENERATOR OPEN TO THE CONTAINMENT ATMOSPHERE

CAUTION
Obtain permission from the Control Room Supervisor prior to repositioning any valve in this alignment.

27' East Penetration Room

VALVE	DESCRIPTION	NOTE	POSITION	INITIALS
2-PS-103	22 S/G SURFACE SMPL ISOL	(1)	SHUT	
2-PS-104	22 S/G BOTTOM SMPL ISOL	(1)	SHUT	
2-AFW-158	22 S/G AFW LINE DRN		SHUT	
2-AFW-1023	LOCAL SAMPLE DRN		SHUT	
2-AFW-175	22 S/G AFW BYP VENT		SHUT	
2-AFW-1016	4531A-PT ROOT	(1)	SHUT	
2-AFW-1009	4531B-PT ROOT	(1)	SHUT	
2-AFW-165	22 S/G AFW BYPASS		SHUT	
2-AFW-164	21 S/G AFW STOP	(1)	SHUT	
2-AFW-4512-CV	AFW TO 22 S/G ISOL		INSTALLED	
2-AFW-200	23 AFW PUMP 22 S/G CKV		INSTALLED	

(1) **IF NOT** controlled by NO-1-112,
THEN LOG in the Locked Valve Deviation Log

ATTACHMENT 2

22 STEAM GENERATOR OPEN TO THE CONTAINMENT ATMOSPHERE

CAUTION
Obtain permission from the Control Room Supervisor prior to repositioning any valve in this alignment.

27' East Penetration Room

VALVE	DESCRIPTION	NOTE	POSITION	INITIALS
2-BD-4012-CV	22 S/G SURFACE B/D ISOL	(1)(4)	SHUT	
AND				
2-PS-103, 2-PS-136, **OR** 2-PS-137	22 S/G SURFACE B/D SMPL ISOL	(1)(4)	SHUT	
- - - - - - - -	- - - - - - - - - - - - - - - - - -		- - - - -	- - - -
OR				
2-BD-193	22 S/G SURFACE B/D ISOL	(1)	SHUT	
OR				
2-BD-194	22 S/G SURFACE B/D B/U ISOL	(1)	SHUT	
2-BD-4013-CV	22 S/G BOTTOM B/D ISOL	(1)(4)	SHUT	
AND				
2-PS-104, 2-PS-138, **OR** 2-PS-139	22 S/G BOTTOM B/D SMPL ISOL	(1)(4)	SHUT	
- - - - - - - -	- - - - - - - - - - - - - - - - - -		- - - - -	- - - -
OR				
2-BD-189	22 S/G BOTTOM B/D ISOL	(1)(3)	SHUT	
OR				
2-BD-190	22 S/G BOTTOM B/D ISOL	(1)(3)	SHUT	

(1) **IF NOT** controlled by NO-1-112,
THEN LOG in the Locked Valve Deviation Log

(3) Valve is located on the 12' of U-2 CNTMT.

(4) The CV **AND** at least ONE Sample valve are verified together **OR** at least ONE valve below the dotted line must be verified.

ATTACHMENT 2

22 STEAM GENERATOR OPEN TO THE CONTAINMENT ATMOSPHERE

CAUTION
Obtain permission from the Control Room Supervisor prior to repositioning any valve in this alignment.

12' Behind Sample Sink

VALVE	DESCRIPTION	NOTE	POSITION	INITIALS
2-MS-153	2-DR-5 STAND PIPE DRN		SHUT	
2-MS-296	2-DR-5 STAND PIPE VENT		SHUT	
2-MS-6611-MOV	2-DR-5 ISOL		SHUT	
2-MS-631	2-MS-6603 LS ISOL	(1)	SHUT	
2-MS-632	2-MS-6603 LS ISOL	(1)	SHUT	

Service Water Room

VALVE	DESCRIPTION	NOTE	POSITION	INITIALS
2-AFW-196	4535-CV BYPASS		SHUT	
2-AFW-198	4535-CV INLET	(1)	SHUT	
2-AFW-4535-CV	23 AFW TO 22 S/G FLOW CONTROL		INSTALLED	

27' Turbine Building

VALVE/BKR	DESCRIPTION	NOTE	POSITION	INITIALS
52-21803	2-MS-6611-MOV BKR	(1)	OFF	

(1) **IF NOT** controlled by NO-1-112,
THEN LOG in the Locked Valve Deviation Log

ATTACHMENT 3

21 STEAM GENERATOR CLOSED TO CONTAINMENT ATMOSPHERE

Verify 21 Steam Generator Containment Side Isolation by completing Column A **OR** Column B of each block.

When Column B is used to satisfy the isolation requirements of a block containing instrumentation,
THEN ENSURE all Column B valves are controlled by NO-1-112 **OR LOG** all valves positioned by Column B in the Locked Valve Deviation Log to ensure proper restoration.

Where a choice of components is listed for an isolation point, circle the component used.

The column is considered complete only if ALL components in that column are verified in the stated condition.

If neither column in a block can be completed, then the Steam Generator is not isolated from Containment and Attachment 1 must be completed or a pre-approved alternate isolation alignment must be provided.

Verification of all SG Pressure Transmitters (PT), Level Transmitters (LT), or Flow Transmitters (FT), shall include the verification of the Test Connection(s) associated with each transmitter, as CAPPED or PLUGGED. This verification **AND** the verification of the transmitter installation shall be concurrently documented by initialing for the transmitter as being INSTALLED.
IF tygon tubing is installed at a test connection,
THEN alternate isolation alignment is required.

Verification of some of the SG instrument isolations requires the use of a safety harness and a safety observer to be able to reach the isolations **PER** Safe Work practices.

With the SG Sluice Rig installed, the SG fill hose connected between the SG Sluice Rig and the EAL Temporary Door in the CNTMT **AND** from the EAL Temporary Door to the fill source may be considered a closed system, if pressurized.

SG Sluice hoses connected between a COD penetration and a SG with inside closure may be considered a closed system (i.e., SG aligned per Attach 3 or Attach 4).

ATTACHMENT 3

21 STEAM GENERATOR CLOSED TO CONTAINMENT ATMOSPHERE

NOTE

Signing for any PT, FT, or LT also signifies that the Test connection(s) for the transmitter has been verified to be capped.

CAUTION

Obtain permission from the Control Room Supervisor prior to repositioning any valve in this alignment.

PT-1013A, LT-1113A, AND LT-1114A INSTRUMENT LEGS

COLUMN A			COLUMN B		
EQUIPMENT DESIGNATION	REQUIRED POSITION	INIT	EQUIPMENT DESIGNATION	REQUIRED POSITION	INIT
PT-1013A	INSTALLED	_____	FW-1501 OR FW-1502	SHUT	_____
FW-1515 OR FW-1516	SHUT	_____			
LT-1113A	INSTALLED	_____	FW-1503 OR FW-1504	SHUT	_____
FW-1506 OR FW-1512	SHUT	_____			
FW-1513 OR FW-1514	SHUT	_____	FW-1587 OR FW-1588	SHUT	_____
LT-1114A	INSTALLED	_____			
FW-1581 OR FW-1582	SHUT	_____			
FW-1584 OR FW-1585	SHUT	_____			
FW-1505	SHUT	_____			

ENSURE all Column B valves are controlled by NO-1-112 OR LOG all valves positioned by Column B in the Locked Valve Deviation Log to ensure proper restoration. Indicate method used.

NO-1-112 OR Locked Valve Deviation Log (Circle one IF Column B used)

ATTACHMENT 3

21 STEAM GENERATOR CLOSED TO CONTAINMENT ATMOSPHERE

NOTE

Signing for any PT, FT, or LT also signifies that the Test connection(s) for the transmitter has been verified to be capped.

CAUTION

Obtain permission from the Control Room Supervisor prior to repositioning any valve in this alignment.

PT-1013B, LT-1113B, LT-1114B AND LT-1105 INSTRUMENT LEGS

COLUMN A			COLUMN B		
EQUIPMENT DESIGNATION	REQUIRED POSITION	INIT	EQUIPMENT DESIGNATION	REQUIRED POSITION	INIT
PT-1013B	INSTALLED	_____	FW-1521 OR FW-1522	SHUT	_____
FW-1535 OR FW-1536	SHUT	_____			
LT-1113B	INSTALLED	_____	FW-1523 OR FW-1524	SHUT	_____
FW-1526 OR FW-1532	SHUT	_____			
FW-1533 OR FW 1534	SHUT	_____	FW-1596 OR FW-1597	SHUT	_____
LT-1114B	INSTALLED	_____			
FW-1590 OR FW-1591	SHUT	_____			
FW-1593 OR FW-1594	SHUT	_____			
LT-1105	INSTALLED				
OR					
FW-1510 AND FW 1517	SHUT	_____			
FW-1520 OR FW-1557	SHUT	_____			
FW-1525	SHUT	_____			

ENSURE all Column B valves are controlled by NO-1-112 OR LOG all valves positioned by Column B in the Locked Valve Deviation Log to ensure proper restoration. Indicate method used.

NO-1-112 OR Locked Valve Deviation Log (Circle one IF Column B used)

ATTACHMENT 3

21 STEAM GENERATOR CLOSED TO CONTAINMENT ATMOSPHERE

NOTE

Signing for any PT, FT, or LT also signifies that the Test connection(s) for the transmitter has been verified to be capped.

CAUTION

Obtain permission from the Control Room Supervisor prior to repositioning any valve in this alignment.

PT-1013C, LT-1113C, AND LT-1114C INSTRUMENT LEGS

COLUMN A			COLUMN B		
EQUIPMENT DESIGNATION	REQUIRED POSITION	INIT	EQUIPMENT DESIGNATION	REQUIRED POSITION	INIT
PT-1013C	INSTALLED	_____	FW-1541 OR FW-1542	SHUT	_____
FW-1555 OR FW-1556	SHUT	_____			
LT-1113C	INSTALLED	_____	FW-1543 OR FW-1544	SHUT	_____
FW-1546 OR FW-1552	SHUT	_____			
FW-1553 OR FW-1554	SHUT	_____	FW-1705 OR FW-1706	SHUT	_____
LT-1114C	INSTALLED	_____			
FW-1599 OR FW-1700	SHUT	_____			
FW-1702 OR FW-1703	SHUT	_____			
FW-1545	SHUT	_____			

ENSURE all Column B valves are controlled by NO-1-112 OR LOG all valves positioned by Column B in the Locked Valve Deviation Log to ensure proper restoration. Indicate method used.

NO-1-112 OR Locked Valve Deviation Log (Circle one IF Column B used)

ATTACHMENT 3

21 STEAM GENERATOR CLOSED TO CONTAINMENT ATMOSPHERE

NOTE

Signing for any PT, FT, or LT also signifies that the Test connection(s) for the transmitter has been verified to be capped.

CAUTION

Obtain permission from the Control Room Supervisor prior to repositioning any valve in this alignment.

PT-1013D, LT-1113D, LT-1114D AND LT-1111 INSTRUMENT LEGS

COLUMN A			COLUMN B		
EQUIPMENT DESIGNATION	REQUIRED POSITION	INIT	EQUIPMENT DESIGNATION	REQUIRED POSITION	INIT
PT-1013D	INSTALLED	_____	FW-1561 OR FW-1562	SHUT	_____
FW-1575 OR FW-1576	SHUT	_____			
LT-1113D	INSTALLED	_____	FW-1563 OR FW-1564	SHUT	_____
FW-1566 OR FW-1572	SHUT	_____			
FW-1573 OR FW 1574	SHUT	_____	FW-1714 OR FW-1715	SHUT	_____
LT-1114D	INSTALLED	_____			
FW-1708 OR FW-1709	SHUT	_____			
FW-1711 OR FW-1712	SHUT	_____			
LT-1111	INSTALLED				
OR					
FW-1530 AND FW 1537	SHUT	_____			
FW-1539 OR FW-1570	SHUT	_____			
FW-1540 OR FW-1577	SHUT	_____			
FW-1565	SHUT	_____			

ENSURE all Column B valves are controlled by NO-1-112 OR LOG all valves positioned by Column B in the Locked Valve Deviation Log to ensure proper restoration. Indicate method used.

NO-1-112 OR Locked Valve Deviation Log (Circle one IF Column B used)

ATTACHMENT 3

21 STEAM GENERATOR CLOSED TO CONTAINMENT ATMOSPHERE

NOTE

Signing for any PT, FT, or LT also signifies that the Test connection(s) for the transmitter has been verified to be capped.

CAUTION

Obtain permission from the Control Room Supervisor prior to repositioning any valve in this alignment.

MAIN FEEDWATER HEADER					
COLUMN A			COLUMN B		
EQUIPMENT DESIGNATION	REQUIRED POSITION	INIT	EQUIPMENT DESIGNATION	REQUIRED POSITION	INIT
FW-220 OR FW-221	SHUT	_____	NONE		
FW-133	INSTALLED	_____			

MAIN STEAM HEADER AND FT-1011 INSTRUMENT LINE					
COLUMN A			COLUMN B		
EQUIPMENT DESIGNATION	REQUIRED POSITION	INIT	EQUIPMENT DESIGNATION	REQUIRED POSITION	INIT
FT-1011	INSTALLED	_____	MS-1286 OR MS-1288	SHUT	_____
MS-1293 OR MS-1294	SHUT	_____	MS-1287 OR MS-1289	SHUT	_____
MS-1295 OR MS-1296	SHUT	_____			
MS-1297 OR MS-1315	SHUT	_____			
MS-1298 OR MS-1316	SHUT	_____			

ENSURE all Column B valves are controlled by NO-1-112 OR LOG all valves positioned by Column B in the Locked Valve Deviation Log to ensure proper restoration. Indicate method used.

NO-1-112 OR Locked Valve Deviation Log (Circle one IF Column B used)

ATTACHMENT 3

21 STEAM GENERATOR CLOSED TO CONTAINMENT ATMOSPHERE

CAUTION
Obtain permission from the Control Room Supervisor prior to repositioning any valve in this alignment.

SG MANWAYS					
COLUMN A			COLUMN B		
EQUIPMENT DESIGNATION	REQUIRED POSITION	INIT	EQUIPMENT DESIGNATION	REQUIRED POSITION	INIT
NOTE: RECIRC COVERS CANNOT BE CREDITED FOR CNTMT CLOSURE.					
SECONDARY SIDE MANWAY COVERS (TWO)	INSTALLED	_____	NONE		
SECONDARY SIDE HANDHOLD COVERS (SIX)	INSTALLED	_____			
SECONDARY SIDE INSPECTION PORTS (TWELVE)	INSTALLED	_____			

AUX FEEDWATER					
COLUMN A			COLUMN B		
EQUIPMENT DESIGNATION	REQUIRED POSITION	INIT	EQUIPMENT DESIGNATION	REQUIRED POSITION	INIT
AFW-129	INSTALLED	_____	NONE		

ATTACHMENT 3

21 STEAM GENERATOR CLOSED TO CONTAINMENT ATMOSPHERE

CAUTION
Obtain permission from the Control Room Supervisor prior to repositioning any valve in this alignment.

SG LAYUP N_2 BLANKETING

COLUMN A

EQUIPMENT DESIGNATION	REQUIRED POSITION	INIT
GSR-515	SHUT	_____
BD-211 **OR** BD-212	SHUT	_____

COLUMN B

EQUIPMENT DESIGNATION	REQUIRED POSITION	INIT
SG in RECIRC, DRN(Sec 6.17) **OR** FILL alignment **PER** OI-12B with GSR-515 **AND** / **OR** BD-211 **AND** BD-212 open		
GSR-513	SHUT	_____
GSR-517	SHUT	_____
GSR-524	SHUT	_____
GSR-503	SHUT	_____
GSR-505	SHUT	_____
GSR-51 (N/A if Filter Rig installed)	SHUT	_____
GSR-55 (N/A if Filter Rig installed)	SHUT	_____
GSR-62 (N/A if used in FILL/DRN alignment)	SHUT	_____
GSR-63	SHUT	_____

(continued)

ATTACHMENT 3

21 STEAM GENERATOR CLOSED TO CONTAINMENT ATMOSPHERE

CAUTION
Obtain permission from the Control Room Supervisor prior to repositioning any valve in this alignment.

SG LAYUP N_2 BLANKETING - (continued)			
COLUMN A	COLUMN B		
	EQUIPMENT DESIGNATION	REQUIRED POSITION	INIT
	The following valves are N/A if the Filter Rig is NOT installed:		
	GSR-39	SHUT	_____
	GSR-40	SHUT	_____
	GSR-41	SHUT	_____
	GSR-42	SHUT	_____
	GSR-43	SHUT	_____
	GSR-44	SHUT	_____
	GSR-45	SHUT	_____
	GSR-46	SHUT	_____

CAUTION
Obtain permission from the Control Room Supervisor prior to repositioning any valve in this alignment.

SG N_2 BLANKING					
COLUMN A			COLUMN B		
EQUIPMENT DESIGNATION	REQUIRED POSITION	INT	EQUIPMENT DESIGNATION	REQUIRED POSITION	INIT
N_2-262	SHUT	____	NONE		

ATTACHMENT 4

22 STEAM GENERATOR CLOSED TO CONTAINMENT ATMOSPHERE

Verify 22 Steam Generator Containment Side Isolation by completing Column A **OR** Column B of each block.

When Column B is used to satisfy the isolation requirements of a block containing instrumentation,
THEN ENSURE all Column B valves are controlled by NO-1-112 **OR LOG** all valves positioned by Column B in the Locked Valve Deviation Log to ensure proper restoration.

Where a choice of components is listed for an isolation point, circle the component used.

The column is considered complete only if ALL components in that column are verified in the stated condition.

If neither column in a block can be completed, then the Steam Generator is not isolated from Containment and Attachment 1 must be completed or a pre-approved alternate isolation alignment must be provided.

Verification of all SG Pressure Transmitters (PT), Level Transmitters (LT), or Flow Transmitters (FT), shall include the verification of the Test Connection(s) associated with each transmitter, as CAPPED or PLUGGED. This verification **AND** the verification of the transmitter installation shall be concurrently documented by initialing for the transmitter as being INSTALLED.
IF tygon tubing is installed at a test connection,
THEN alternate isolation alignment is required.

Verification of some of the SG instrument isolations requires the use of a safety harness and a safety observer to be able to reach the isolations **PER** Safe Work practices.

With the SG Sluice Rig installed, the SG fill hose connected between the SG Sluice Rig and the EAL Temporary Door in the CNTMT **AND** from the EAL Temporary Door to the fill source may be considered a closed system, if pressurized.

SG Sluice hoses connected between a COD penetration and a SG with inside closure may be considered a closed system (i.e., SG aligned per Attach 3 or Attach 4).

ATTACHMENT 4

22 STEAM GENERATOR CLOSED TO CONTAINMENT ATMOSPHERE

NOTE

Signing for any PT, FT, or LT also signifies that the Test connection(s) for the transmitter has been verified to be capped.

CAUTION

Obtain permission from the Control Room Supervisor prior to repositioning any valve in this alignment.

PT-1023A, LT-1123A, AND LT-1124A INSTRUMENT LEGS

COLUMN A			COLUMN B		
EQUIPMENT DESIGNATION	REQUIRED POSITION	INIT	EQUIPMENT DESIGNATION	REQUIRED POSITION	INIT
PT-1023A	INSTALLED	_____	FW-1601 OR FW-1602	SHUT	_____
FW-1615 OR FW-1616	SHUT	_____			
LT-1123A	INSTALLED	_____	FW-1603 OR FW-1604	SHUT	_____
FW-1606 OR FW-1612	SHUT	_____			
FW-1613 OR FW-1614	SHUT	_____	FW-1687 OR FW-1688	SHUT	_____
LT-1124A	INSTALLED	_____			
FW-1681 OR FW-1682	SHUT	_____			
FW-1684 OR FW-1685	SHUT	_____			
FW-1605	SHUT	_____			

ENSURE all Column B valves are controlled by NO-1-112 OR LOG all valves positioned by Column B in the Locked Valve Deviation Log to ensure proper restoration. Indicate method used.

NO-1-112 OR Locked Valve Deviation Log (Circle one IF Column B used)

ATTACHMENT 4

22 STEAM GENERATOR CLOSED TO CONTAINMENT ATMOSPHERE

NOTE

Signing for any PT, FT, or LT also signifies that the Test connection(s) for the transmitter has been verified to be capped.

CAUTION

Obtain permission from the Control Room Supervisor prior to repositioning any valve in this alignment.

PT-1023B, LT-1123B, LT-1124B AND LT-1106 INSTRUMENT LEGS

COLUMN A			COLUMN B		
EQUIPMENT DESIGNATION	REQUIRED POSITION	INIT	EQUIPMENT DESIGNATION	REQUIRED POSITION	INIT
PT-1023B	INSTALLED	_____	FW-1621 OR FW-1622	SHUT	_____
FW-1635 OR FW-1636	SHUT	_____			
LT-1123B	INSTALLED	_____	FW-1623 OR FW-1624	SHUT	_____
FW-1633 OR FW 1634	SHUT	_____			
LT-1124B	INSTALLED	_____	FW-1696 OR FW-1697	SHUT	_____
FW-1690 OR FW-1691	SHUT	_____			
FW-1693 OR FW-1694	SHUT	_____			
LT-1106	INSTALLED				
OR					
FW-1610 AND FW 1617	SHUT	_____			
FW-1619 OR FW-1650	SHUT	_____			
FW-1620 OR FW-1657	SHUT	_____			
FW-1625	SHUT	_____			

ENSURE all Column B valves are controlled by NO-1-112 OR LOG all valves positioned by Column B in the Locked Valve Deviation Log to ensure proper restoration. Indicate method used.

NO-1-112 OR Locked Valve Deviation Log (Circle one IF Column B used)

ATTACHMENT 4

22 STEAM GENERATOR CLOSED TO CONTAINMENT ATMOSPHERE

NOTE

Signing for any PT, FT, or LT also signifies that the Test connection(s) for the transmitter has been verified to be capped.

CAUTION

Obtain permission from the Control Room Supervisor prior to repositioning any valve in this alignment.

PT-1023C, LT-1123C, AND LT-1124C INSTRUMENT LEGS

COLUMN A			COLUMN B		
EQUIPMENT DESIGNATION	REQUIRED POSITION	INIT	EQUIPMENT DESIGNATION	REQUIRED POSITION	INIT
PT-1023C	INSTALLED	_____	FW-1641 OR FW-1642	SHUT	_____
FW-1655 OR FW-1656	SHUT	_____			
LT-1123C	INSTALLED	_____	FW-1643 OR FW-1644	SHUT	_____
FW-1646 OR FW-1652	SHUT	_____			
FW-1653 OR FW-1654	SHUT	_____	FW-1805 OR FW-1806	SHUT	_____
LT-1124C	INSTALLED	_____			
FW-1699 OR FW-1800	SHUT	_____			
FW-1802 OR FW-1803	SHUT	_____			
FW-1645	SHUT	_____			

ENSURE all Column B valves are controlled by NO-1-112 OR LOG all valves positioned by Column B in the Locked Valve Deviation Log to ensure proper restoration. Indicate method used.

NO-1-112 OR Locked Valve Deviation Log (Circle one IF Column B used)

ATTACHMENT 4

22 STEAM GENERATOR CLOSED TO CONTAINMENT ATMOSPHERE

NOTE

Signing for any PT, FT, or LT also signifies that the Test connection(s) for the transmitter has been verified to be capped.

CAUTION

Obtain permission from the Control Room Supervisor prior to repositioning any valve in this alignment.

PT-1023D, LT-1123D, LT-1124D AND LT-1121 INSTRUMENT LEGS

COLUMN A			COLUMN B		
EQUIPMENT DESIGNATION	REQUIRED POSITION	INIT	EQUIPMENT DESIGNATION	REQUIRED POSITION	INIT
PT-1023D	INSTALLED	_____	FW-1661 OR FW-1662	SHUT	_____
FW-1675 OR FW-1676	SHUT	_____			
LT-1123D	INSTALLED	_____	FW-1663 OR FW-1664	SHUT	_____
FW-1666 OR FW-1672	SHUT	_____			
FW-1673 OR FW 1674	SHUT	_____	FW-1814 OR FW-1815	SHUT	_____
LT-1124D	INSTALLED	_____			
FW-1808 OR FW-1809	SHUT	_____			
FW-1811 OR FW-1812	SHUT	_____			
LT-1121	INSTALLED				
OR					
FW-1630 AND FW-1637	SHUT	_____			
FW-1639 OR FW-1670	SHUT	_____			
FW-1640 OR FW-1677	SHUT	_____			
FW-1665	SHUT	_____			

ENSURE all Column B valves are controlled by NO-1-112 OR LOG all valves positioned by Column B in the Locked Valve Deviation Log to ensure proper restoration. Indicate method used.

NO-1-112 OR Locked Valve Deviation Log (Circle one IF Column B used)

ATTACHMENT 4

22 STEAM GENERATOR CLOSED TO CONTAINMENT ATMOSPHERE

NOTE

Signing for any PT, FT, or LT also signifies that the Test connection(s) for the transmitter has been verified to be capped.

CAUTION

Obtain permission from the Control Room Supervisor prior to repositioning any valve in this alignment.

MAIN FEEDWATER HEADER					
COLUMN A			COLUMN B		
EQUIPMENT DESIGNATION	REQUIRED POSITION	INIT	EQUIPMENT DESIGNATION	REQUIRED POSITION	INIT
FW-222 OR FW-223	SHUT	_____	NONE		
FW-130	INSTALLED	_____			

MAIN STEAM HEADER AND FT-1021 INSTRUMENT LINE					
COLUMN A			COLUMN B		
EQUIPMENT DESIGNATION	REQUIRED POSITION	INIT	EQUIPMENT DESIGNATION	REQUIRED POSITION	INIT
FT-1021	INSTALLED	_____	MS-1291 OR MS-1301	SHUT	_____
MS-1306 OR MS-1307	SHUT	_____	MS-1300 OR MS-1302	SHUT	_____
MS-1308 OR MS-1309	SHUT	_____			
MS-1310 OR MS-1311	SHUT	_____			
MS-1312 OR MS-1313	SHUT	_____			

ENSURE all Column B valves are controlled by NO-1-112 OR LOG all valves positioned by Column B in the Locked Valve Deviation Log to ensure proper restoration. Indicate method used.

NO-1-112 OR Locked Valve Deviation Log (Circle one IF Column B used)

ATTACHMENT 4

22 STEAM GENERATOR CLOSED TO CONTAINMENT ATMOSPHERE

CAUTION
Obtain permission from the Control Room Supervisor prior to repositioning any valve in this alignment.

SG MANWAYS					
COLUMN A			COLUMN B		
EQUIPMENT DESIGNATION	REQUIRED POSITION	INIT	EQUIPMENT DESIGNATION	REQUIRED POSITION	INIT
NOTE: RECIRC COVERS CANNOT BE CREDITED FOR CNTMT CLOSURE.					
SECONDARY SIDE MANWAY COVERS (TWO)	INSTALLED	_____	NONE		
SECONDARY SIDE HANDHOLD COVERS (SIX)	INSTALLED	_____			
SECONDARY SIDE INSPECTION PORTS (TWELVE)	INSTALLED	_____			

AUX FEEDWATER					
COLUMN A			COLUMN B		
EQUIPMENT DESIGNATION	REQUIRED POSITION	INIT	EQUIPMENT DESIGNATION	REQUIRED POSITION	INIT
AFW-130	INSTALLED	_____	NONE		

ATTACHMENT 4

22 STEAM GENERATOR CLOSED TO CONTAINMENT ATMOSPHERE

CAUTION
Obtain permission from the Control Room Supervisor prior to repositioning any valve in this alignment.

SG LAYUP N_2 BLANKETING

COLUMN A

EQUIPMENT DESIGNATION	REQUIRED POSITION	INIT
GSR-511	SHUT	_____
BD-213 **OR** BD-214	SHUT	_____

COLUMN B

EQUIPMENT DESIGNATION	REQUIRED POSITION	INIT
SG in RECIRC, DRN(Sec 6.18) **OR** FILL alignment **PER** OI-12B with GSR-511 **AND** / **OR** BD-213 **AND** BD-214 open		
GSR-513	SHUT	_____
GSR-517	SHUT	_____
GSR-524	SHUT	_____
GSR-503	SHUT	_____
GSR-505	SHUT	_____
GSR-51 (N/A if Filter Rig installed)	SHUT	_____
GSR-55 (N/A if Filter Rig installed)	SHUT	_____
GSR-62 (N/A if used in FILL/DRN alignment)	SHUT	_____
GSR-63	SHUT	_____

(continued)

ATTACHMENT 4

22 STEAM GENERATOR CLOSED TO CONTAINMENT ATMOSPHERE

CAUTION
Obtain permission from the Control Room Supervisor prior to repositioning any valve in this alignment.

SG LAYUP N_2 BLANKETING - (continued)			
COLUMN A	COLUMN B		
	EQUIPMENT DESIGNATION	REQUIRED POSITION	INIT
	The following valves are N/A if the Filter Rig is NOT installed:		
	GSR-39	SHUT	_____
	GSR-40	SHUT	_____
	GSR-41	SHUT	_____
	GSR-42	SHUT	_____
	GSR-43	SHUT	_____
	GSR-44	SHUT	_____
	GSR-45	SHUT	_____
	GSR-46	SHUT	_____

CAUTION
Obtain permission from the Control Room Supervisor prior to repositioning any valve in this alignment.

SG N_2 BLANKING					
COLUMN A			COLUMN B		
EQUIPMENT DESIGNATION	REQUIRED POSITION	INT	EQUIPMENT DESIGNATION	REQUIRED POSITION	INIT
N_2-265	SHUT	_____	NONE		

ATTACHMENT 5

VALVES REQUIRING SCAFFOLDING/LADDER

27' WEST PENETRATION ROOM

PEN	VALVE NUMBER	LOCATION
61	0-SFP-223	27' WEST PENET. ROOM, SE, 15' OVERHEAD, TOP OF SFP HDR

5' WEST PENETRATION ROOM

1B	0-WGS-657	5' WEST PENET. ROOM, SW CORNER, 5' BELOW 27' DECKING
2B	2-CVC-282	MIDDLE OF ROOM, JUST BELOW 27' DECKING
7A	2-ILRT-1	2' BELOW 27' DECKING
7B	2-ILRT-5	2' BELOW 27' DECKING
7A	2-ILRT-2	2' BELOW 27' DECKING
7B	2-ILRT-6	2' BELOW 27' DECKING
37	0-PSW-1005	4' BELOW 27' DECKING

ATTACHMENT 5

VALVES REQUIRING SCAFFOLDING/LADDER (Continued)

INSIDE CONTAINMENT

PEN	VALVE NUMBER	LOCATION
7B	BLIND FLANGE	BASEMENT, BEHIND WEST STAIRWELL, 20' OVERHEAD
60	2-ES-144	33' ELEVATION, WEST SIDE
37	0-PSW-1020	BASEMENT, WEST WALL, 20' OVERHEAD
2A	2-CVC-356	25' ABOVE RCP OIL DRAIN TANK
18	2-CC-482	BASEMENT, 30' ABOVE S/G RECIRC RIG
16	2-CC-382	BASEMENT, 30' ABOVE S/G RECIRC RIG
42	0-SFP-4	S END OF REFUELING POOL
50	BLIND FLANGE	BASEMENT, EAST SIDE, 25' OVERHEAD

ATTACHMENT 6

MSIV DIAGRAM

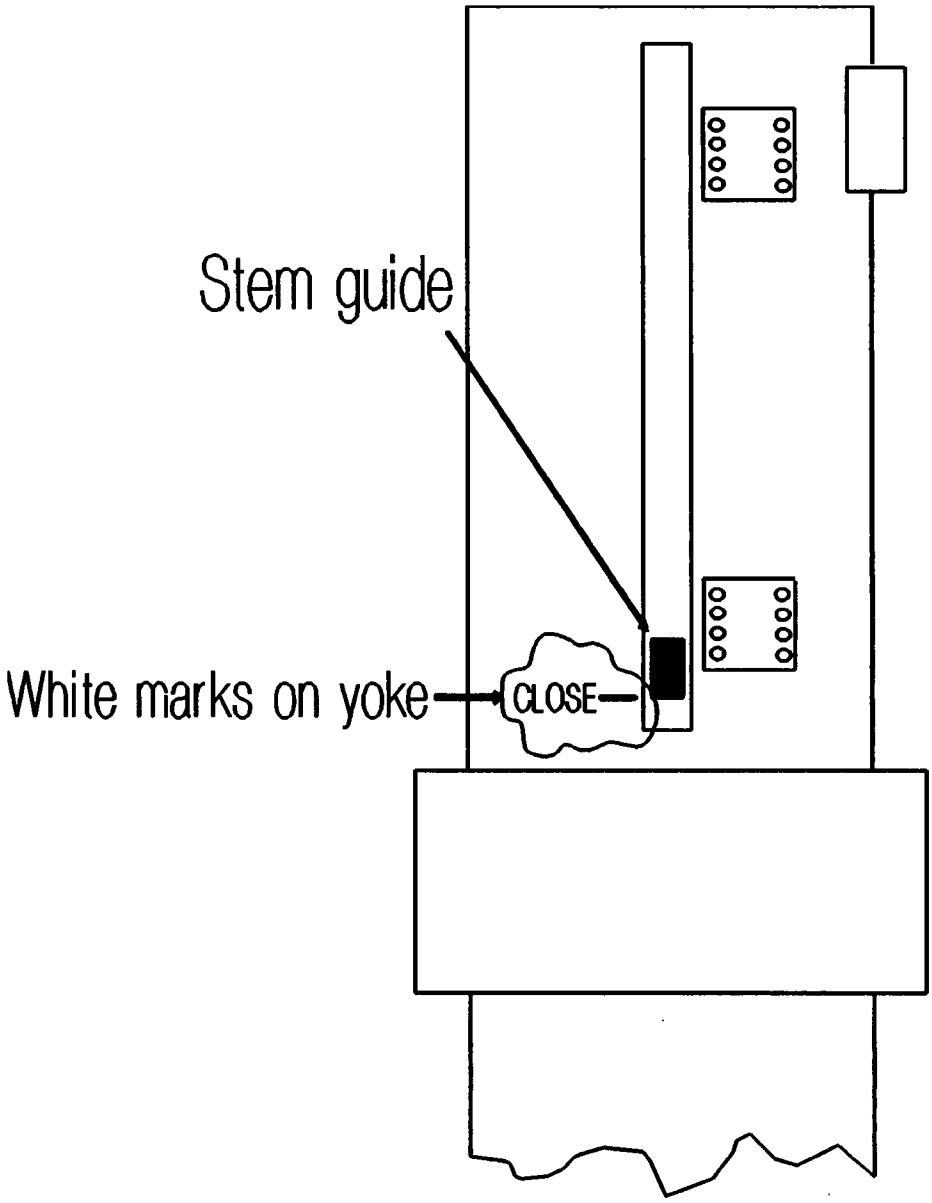

The MSIV is shut when the bottom of the stem guide is adjacent to the white marks on the yoke

CALVERT CLIFFS NUCLEAR POWER PLANT
SURVEILLANCE TEST PROCEDURE
UNIT ONE

STP O-90-1

AC SOURCES AND ON SITE POWER DISTRIBUTION SYSTEMS 7 DAY OPERABILITY VERIFICATION

REVISION 22

SAFETY RELATED

CONTINUOUS USE

Approval Authority: M. V. Seckens 12/7/01
Signature/Date

Effective Date: 12/7/01

SURVEILLANCE TEST PROCEDURES ADDITIONAL COVER SHEET INFORMATION

A. **Test Performance**

Permission to perform test: _____ / _____
Shift Manager Date

B. **Test completion, results review and approval** (Circle appropriate answer)

Accept. Criteria in spec?	YES NO N/A	Adjustments made?	YES NO N/A
As found results in spec?	YES NO N/A	CR submitted?	YES NO N/A
As left results in spec?	YES NO N/A	Malfunctions indicated?	YES NO N/A

REMARKS: _____

Test completed by: _____ / _____
Date

Analysis of results: _____

Shift Manager review: _____ / _____
Date

Analysis/Comments: _____

Functional Surveillance
Test Coordinator: _____ Date: _____

EQSE (if required): _____ Date: _____

* PORC Meeting No.: _____ Date: _____

* Plant General Manager: _____ Date: _____

* Required only if completed test on SR and designated NSR structures, systems and components (per Q List) identified a malfunction or were out of specification.

Attach a separate sheet, if necessary, to document additional comments.

TABLE OF CONTENTS

	TITLE	PAGE
1.0	PURPOSE	5
2.0	APPLICABILITY/SCOPE	5
3.0	REFERENCES AND DEFINITIONS	7
4.0	PREREQUISITES	7
5.0	PRECAUTIONS	7
6.0	PERFORMANCE	8
6.1	500 KV, 69 KV & 13 KV POWER	8
6.2	4 KV EMERGENCY BUSES	14
6.3	480 V EMERGENCY BUSES	17
6.4	120 VAC VITAL INVERTERS AND BUSES	20
6.5	D.C. BUSES	22
7.0	POST PERFORMANCE ACTIVITIES	26
8.0	BASES	26
9.0	RECORDS	26

LIST OF EFFECTIVE PAGES

PAGE NUMBER	REVISION
1-26	22

PROCEDURE ALTERATIONS

PAGE NUMBER	REVISION/CHANGE
14	2202

1.0 PURPOSE

A. This test demonstrates operability of off site and on site power distribution systems by verifying proper breaker alignment and bus voltages.

2.0 APPLICABILITY/SCOPE

A. Completion of this test satisfies the following Technical Specification surveillance requirements:

1. Modes 1, 2, 3, and 4:

   TS SR 3.8.1.1, 3.8.1.2, 3.8.7.1, 3.8.9.1

2. Modes 5 and 6, During movement of irradiated fuel assemblies:

   TS SR 3.8.2.1, 3.8.8.1, 3.8.10.1

B. Test Requirements:

1. This test shall be performed by individuals qualified on the watch stations for the affected equipment.

2. The Shift Manager shall determine if a pre-test briefing is required and direct the SRO accordingly.

C. All voltages and amp readings will be taken using the specified Control Room indication. If the specified Control Room indicator is out of service, then obtain the required reading, using the alternate indication, in the order of preference listed below:

1. If the specified Control Room 4 kV bus voltage meter for the Safety Related busses is out of service, then voltage may be read from the associated Synchronizer Running Voltmeter. The 4 kV bus voltage reading is obtained by multiplying the Synchronizer Running Voltmeter indication by 35. The results shall be peer checked and recorded in the remarks section. The sync stick must be used for the Synchronizer Running Voltmeter to indicate the bus voltage. When using the sync stick, an open associated 4 kV breaker is preferred for reduced trip risk. **[B0649]**

2. If Control Room indication is out of service, then use local indications and note it in the remarks.

3. If local indications are not available, then appropriate portable, calibrated test instrumentation may be used by qualified personnel. If portable test equipment is used, then record the following in the remarks:

   - parameter/indicator the test instrument was used for
   - type of meter used
   - meter serial number
   - calibration due date **OR** date calibrated
   - specific reason the permanent plant indication can not be used

2.0 APPLICABILITY/SCOPE (Continued)

D. Individual sections may be performed to satisfy the following Technical Specification requirements as follows:

TS Requirement	Section to be performed
• 3.8.1.1, 3.8.1.2	6.1, 6.2
• 3.8.2.1	6.1, 6.2
• 3.8.7.1, 3.8.9.1	6.2, 6.3, 6.4
• 3.8.8.1, 3.8.10.1	6.2, 6.3, 6.4
• 3.8.9.1	6.5
• 3.8.10.1	6.5

E. **CHECK MARK** the reason for performing this STP:

☐ Scheduled Surveillance

☐ Operability Verification
(Note purpose and list steps in Pre-surveillance Remarks)

Sections 6.1 through 6.5 are independent subsections that may be omitted in their entirety for equipment not tested.

MO/CR #:_____

Pre-surveillance
remarks:_____

_____

_____

_____

_____

Determination made by:_____
(SRO)

3.0 REFERENCES AND DEFINITIONS

3.1 REFERENCES

A. DRAWINGS

1. 61-001-E, Electrical Main Single Line Diagram
2. 61-030-E, Single Line Diagram Vital 120 VAC & 125 VDC Emergency 250 VDC
3. 1E76 Sheet 22 and 23, Reactor Safeguards Motor Operated Valves

B. Procedures

1. EN-4-104, Surveillance Testing

C. Codes and Standards

1. Technical Specifications

3.2 DEFINITIONS

A. During the performance of this procedure the following convention will be used for breaker position:

1. O = Open, C = Closed.
2. Normal positions for Modes 1, 2, 3 and 4 will be [Bracketed] **AND Bolded.**

4.0 PREREQUISITES

	INITIALS
A. A pre-test briefing has been held. (N/A if Shift Manager has determined that a pre-test briefing not required.)	_____ SRO
B. **PERFORM** a pre-test page check of this STP.	_____

5.0 PRECAUTIONS

NONE

6.0 PERFORMANCE

_____/_____/U1_____
Date Time Mode

NOTE
The SRO operability evaluation for each section of this STP may be performed after all sections of the STP have been completed to prevent unnecessary delays in the performance of the surveillance.

6.1 500 KV, 69 KV & 13 KV POWER — INITIALS

A. **CHECK MARK** Switchyard breaker position **AND RECORD** bus voltage:

NOTE
A breaker **AND** its associated disconnects must be closed to be marked closed for this surveillance.

Waugh Chapel						Chalk Point		
0	Line 5051	[C]	0	Line 5052	[C]	0	Line 5072	[C]
	552-21			552-41			552-61	
	552-23			552-43			552-63	
	552-22						552-62	
0	Line 5051 Disconnect	[C]				0	Line 5072 Disconnect	[C]
	89-IL						89-2L	
0	11 Serv Bus 13 KV FDR	[C]	0	21 Serv Bus 13 KV FDR	[C]			
	252-1104			252-2104				

11 13 KV Bus Volts_____KV (1-EI-307)

21 13 KV Bus Volts_____KV (2-EI-321)
(Accept. range of 12.45 to 15.2 KV) [B0120]

6.1 500 KV, 69 KV & 13 KV POWER (Continued) **INITIALS**

B. **CHECK** 500 KV lines 5051, 5052 **AND** 5072 in service at Waugh Chapel **OR** Chalk Point.

1. **CHECK MARK** one of the following:

☐ Line power indication of a minimum of 20 Megawatts in either direction. (1C01)

☐ Call to SO-BPO verifying lines in service.

2. **CIRCLE** the status of each High Line:

Line 5051 in service	YES / NO
Line 5052 in service	YES / NO
Line 5072 in service	YES / NO

C. **CHECK MARK** 23 Bus tie breaker positions:
(N/A if the SMECO Offsite Power Source is **NOT** credited for one of the required High Lines.)

[O]	11 Serv Bus Tie	C		[O]	21 Serv Bus Tie	C	N/A
	252-1105				252-2105		

6.1 500 KV, 69 KV & 13 KV POWER (Continued) **INITIALS**

NOTE
TS SR 3.8.1.1 requires breaker alignment and indicated power availability must be verified every 8 hours when the Offsite Power Source from SMECO is required.

D. 69 KV SMECO

CHECK MARK the following bkr positions:
(N/A if the SMECO Offsite Power Source is **NOT** credited for one of the required High Lines.)

0	Offsite PWR Source from SMECO	[C]	N/A
	252-2301		

- **CHECK** Power availability at 0SH301 by rotating handswitch to all three phase positions **AND** observe SMECO Voltage between 12.45 KV and 15.2 KV. **[B0120]**
(N/A if the SMECO Offsite Power Source is **NOT** credited for one of the required High Lines.) _____

[0]	WAREHOUSE NO. 1 DISC	C	N/A
	0SH301		

6.1 500 KV, 69 KV & 13 KV POWER (Continued) **INITIALS**

E. SITE POWER SYSTEM
(N/A if in TS 3.8.1.A) _____

NOTE

It is not required for the operator to conduct a physical/local switch walkdown while performing the following surveillance verification. The use of OI-27B, APPENDIX B, SITE POWER SYSTEM - POSITION DEVIATION SHEET is adequate to comply with the TS surveillance. **[B0700]**

- If a physical/local switch walkdown is desired then it must be conducted by a operator **NOT** standing a Watch Station.

CHECK MARK one of the following:

☐ The Site Power System is in a normal lineup.
There is NO active OI-27B, APPENDIX B, SITE POWER SYSTEM - POSITION DEVIATION SHEET.

☐ The Site Power System is **NOT** in a normal lineup.
There is an active OI-27B, APPENDIX B, SITE POWER SYSTEM - POSITION DEVIATION SHEET **AND** at least ONE of the following conditions are met.

CHECK MARK one of the following:

☐ ALL the following are in the LOCKED OPEN position:

- Switch 3, Position 3
- Switch 4, Position 3
- Switch 12, Position 3

☐ Switch 16, Position 4, is LOCKED OPEN.

☐ Switch 17, Position 4, is LOCKED OPEN.

☐ An evaluation of the current lineup (using DWG 61212-SH0002 and the Deviation Sheet) has been conducted to ensure 13 KV Power Source separation has been maintained:

- Verify DWG 61212-SH0002 revision is current.

6.1 500 KV, 69 KV & 13 KV POWER (Continued) **INITIALS**

F. **ACCEPTANCE CRITERIA**

> **NOTE**
> Performance of this section constitutes a supervisory review. Actual observation of equipment by the SRO performing this review is not required. Answering YES to a step below signifies the referenced step has been completed and signed off by a qualified operator **other than the SRO reviewer** and the results are acceptable and valid.

1. MODES 1, 2, 3 and 4: (TS SR 3.8.1.1 and 3.8.1.2)
(N/A the following if in TS Action 3.8.1.A)

   a. TWO of the four off site sources (Line 5051, 5052, 5072, **OR** SMECO) are operable and available to independently supply 11 **AND** 21 13 KV Buses.

   YES / NO / N/A (circle one) _____ SRO

   b. The SITE POWER SYSTEM alignment maintains 13 KV Power Source separation as indicated by a check mark in Step 6.1.E.

   YES / NO / N/A (circle one) _____ SRO

   c. 11 **AND** 21 13 KV Bus voltage is in the acceptable range.

   YES / NO / N/A (circle one) _____ SRO

2. MODES 1, 2, 3 and 4 when the unit is in TS Action 3.8.1.A:
(TS SR 3.8.1.1 and 3.8.1.2)
(N/A the following if **NOT** in TS Action 3.8.1.A)

   a. ONE of the four off site sources (Line 5051, 5052, 5072, **OR** SMECO) are operable and available to supply 11 **OR** 21 13 KV Buses.

   YES / NO / N/A (circle one) _____ SRO

   b. 11 **OR** 21 13 KV Bus voltage is in the acceptable range.

   YES / NO / N/A (circle one) _____ SRO

6.1.F **500 KV, 69 KV & 13 KV POWER (Continued)** **INITIALS**

3. Modes 5 and 6 and During movement of irradiated fuel assemblies: (TS SR 3.8.2.1)

   a. ONE of the four off site sources (Line 5051, 5052, 5072, **OR** SMECO) are operable and available to supply 11 **OR** 21 13 KV Buses.

   YES / NO / N/A (circle one) _____ SRO

   b. 11 **OR** 21 13 KV Bus voltage is in the acceptable range.

   YES / NO / N/A (circle one) _____ SRO

4. This test section is considered satisfactory if YES **OR** N/A was answered in the steps above.

   SAT / UNSAT (circle one) _____ SRO

- **IF** unsat,
  THEN NOTIFY the SM, and take actions as required by Technical Specifications and administrative actions stated in EN-4-104.

- **INITIATE** a Condition Report for all equipment deficiencies.

6.2 4 KV EMERGENCY BUSES

INITIALS

A. **CHECK MARK** breaker position **AND RECORD** bus voltage:

1. 4 KV Bus Feeder Breakers HI Side:

0	U4000-11 13 KV FDR	[C]		0	U4000-21 13 KV FDR	[C]	
	252-1102				252-2102		

2. 11 4 KV Bus Feeder Breakers:

02202

0	11 4 KV Bus Normal FDR	[C]		[O]	11 4 KV Bus ALT FDR	C		[O]	OC DG 11 4KV BUS FDR	C	
	152-1115				152-1101				152-1106		
11 4 KV Bus Volts_____KV (1-EI-411) (acceptable range of 4.19 to 4.31 KV)											

3. 14 4 KV BUS Feeder Breakers:

02202

0	14 4 KV Bus Normal FDR	[C]		[O]	14 4 KV Bus ALT FDR	C		[O]	OC DG 14 4KV BUS FDR	C	
	152-1414				152-1401				152-1406		
14 4 KV Bus Volts_____KV (1-EI-414) (acceptable range of 4.19 to 4.31 KV)											

4. **LIST** breakers above that are **NOT** operable **OR DO NOT** have Control Power available:

_____

_____

6.2 4 KV EMERGENCY BUSES (Continued) **INITIALS**

B. **ACCEPTANCE CRITERIA**

NOTE
Performance of this section constitutes a supervisory review. Actual observation of equipment by the SRO performing this review is not required. Answering YES to a step below signifies the referenced step has been completed and signed off by a qualified operator **other than the SRO reviewer** and the results are acceptable and valid.

1. MODES 1, 2, 3 and 4: (TS SR 3.8.1.1, 3.8.1.2, and 3.8.9.1)
(N/A the following if in TS Action 3.8.1.A)

a. **CHECK MARK** one of the following:

☐ 11 **AND** 14 4 KV Service Buses are aligned and powered from their Normal FDR's with their Alternate FDR's OPEN.

☐ 11 **AND** 14 4 KV Service Buses are aligned and powered from their Alternate FDR's with their Normal FDR's OPEN.

☐ 11 **AND** 14 4 KV Service Buses can be realigned to either of the above line-ups by operating breakers with control power available.

YES / NO / N/A (circle one) _____ SRO

b. 11 **AND** 14 4 KV bus voltage is in the acceptable range.

YES / NO / N/A (circle one) _____ SRO

6.2.B **4 KV EMERGENCY BUSES (Continued)** **INITIALS**

2. MODES 1, 2, 3 and 4 when the unit is in TS Action 3.8.1.A: (TS SR 3.8.1.1, 3.8.1.2, and 3.8.9.1) (N/A the following if **NOT** in TS Action 3.8.1.A)

   a. 11 **AND** 14 4 KV Service Buses are lined up and powered from the operable power source by either the Normal FDR **OR** the Alternate FDR.

   YES / NO / N/A (circle one) _____ SRO

   b. 11 **AND** 14 4 KV bus voltage is in the acceptable range.

   YES / NO / N/A (circle one) _____ SRO

3. Modes 5 and 6 and During movement of irradiated fuel assemblies operability evaluation: (TS SR 3.8.2.1, and 3.8.10.1)

   a. 11 **OR** 14 4 KV Service Buses is lined up and powered from its Normal **OR** Alternate power supply.

   YES / NO / N/A (circle one) _____ SRO

   b. The operable 4 KV Bus voltage is in the acceptable range.

   YES / NO / N/A (circle one) _____ SRO

4. This test section is considered satisfactory if YES **OR** N/A was answered in the steps above.

   SAT / UNSAT (circle one) _____ SRO

   - **IF** unsat, **THEN NOTIFY** the SM, and take actions as required by Technical Specifications and administrative actions stated in EN-4-104.

   - **INITIATE** a Condition Report for all equipment deficiencies.

6.3 480 V EMERGENCY BUSES

INITIALS

A. **CHECK MARK** breaker position **AND RECORD** bus voltage indication:

1. 11 480 V Emergency Bus:

0	11A 480 V Bus FDR	[C]		0	11B 480 V Bus FDR	[C]
	152-1114				152-1102	
	52-1112				52-1113	
11A 480 V Bus_____V (1-EI-511A)				11B 480 V Bus_____V (1-EI-511B)		
(acceptable range of 445 TO 510 V) **[B0120]**						

2. 14 480 V Emergency Bus:

0	14A 480 V Bus FDR	[C]		0	14B 480 V Bus FDR	[C]
	152-1402				152-1413	
	52-1412				52-1413	
14A 480 V Bus_____V (1-EI-514A)				14B 480 V Bus_____V (1-EI-514B)		
(acceptable range of 445 TO 510 V) **[B0120]**						

3. 480 V MCC Supply:

0	MCC 104	[C]		0	MCC 114	[C]
	52-1409				52-1119	
	52-10401				52-11401	

4. 480 V Bus Cross Ties: **[B0327]**

[O]	MCC 104 TO MCC 114	C		[O]	MCC 114 TO MCC 104	C
	52-10420				52-11420	

6.3.A **480 V EMERGENCY BUSES (Continued)** **INITIALS**

5. MCC power availability:

   a. **CHECK** MCC energized by observing any one of these components having a red or green light energized on panels 1C08 and 1C09 **OR** locally on the breaker panel: (Circle YES if MCC energized, otherwise circle NO)

MCC 104 ENERGIZED	YES / NO (CIRCLE ONE)	MCC 114 ENERGIZED	YES / NO (CIRCLE ONE)
SI-616-MOV	52-10416	SI-617-MOV	52-11416
SI-626-MOV	52-10417	SI-627-MOV	52-11417
SI-636-MOV	52-10418	SI-637-MOV	52-11418
SI-646-MOV	52-10419	SI-647-MOV	52-11419
SI-635-MOV	52-10407	SI-615-MOV	52-11407
SI-645-MOV	52-10408	SI-625-MOV	52-11408

B. **ACCEPTANCE CRITERIA**

NOTE
Performance of this section constitutes a supervisory review. Actual observation of equipment by the SRO performing this review is not required. Answering YES to a step below signifies the referenced step has been completed and signed off by a qualified operator **other than the SRO reviewer** and the results are acceptable and valid.

1. MODES 1, 2, 3, and 4. (TS SR 3.8.9.1)

   a. All 480 V Bus FDR and Supply Breakers in steps 6.3.A.1, 6.3.A.2 and 6.3.A.3 are in their NORMAL CLOSED Position **AND** the Cross Tie Breakers in Step 6.3.A.4 are OPEN.

      YES / NO / N/A (circle one) _____ SRO

   b. 11A, 11B, 14A **AND** 14B Bus Voltage is in the Acceptable Range.

      YES / NO / N/A (circle one) _____ SRO

6.3.B.1 **480 V EMERGENCY BUSES (Continued)** **INITIALS**

c. Power is available on MCCs 104 & 114 in step 6.3.A.5.

YES / NO / N/A (circle one) _____ SRO

2. Modes 5 and 6 and During movement of irradiated fuel assemblies operability evaluation. (TS SR 3.8.10.1)

a. One of the following 480 V Emergency Service Buses is energized.

- 11A and 11B

OR

- 14A and 14B

YES / NO / N/A (circle one) _____ SRO

b. Bus Voltage is in the Acceptable Range for operable buses.

YES / NO / N/A (circle one) _____ SRO

3. This test section is considered satisfactory if YES **OR** N/A was answered in the steps above.

SAT / UNSAT (circle one) _____ SRO

- **IF** unsat,
  THEN NOTIFY the SM, and take actions as required by Technical Specifications and administrative actions stated in EN-4-104.

- **INITIATE** a Condition Report for all equipment deficiencies.

6.4 120 VAC VITAL INVERTERS AND BUSES

INITIALS

A. **CIRCLE** Manual Transfer Switch Position **AND RECORD** Bus Voltage: **[B0327]**

11 120 VAC Vital Inverter	
[INV 1] [INV 2]	ALT
11 Bus Voltage_____V (1-EI-1911)	

12 120 VAC Vital Inverter	
[INV 1] [INV 2]	ALT
12 Bus Voltage_____V (1-EI-1912)	

13 120 VAC Vital Inverter	
[INV 1] [INV 2]	ALT
13 Bus Voltage_____V (1-EI-1913)	

14 120 VAC Vital Inverter	
[INV 1] [INV 2]	ALT
14 Bus Voltage_____V (1-EI-1914)	

(Acceptable range of 116 to 124 VAC) [B0120]

B. **ACCEPTANCE CRITERIA**

> **NOTE**
> Performance of this section constitutes a supervisory review. Actual observation of equipment by the SRO performing this review is not required. Answering YES to a step below signifies the referenced step has been completed and signed off by a qualified operator **other than the SRO reviewer** and the results are acceptable and valid.

1. Modes 1, 2, 3 and 4: (TS SR 3.8.7.1)

   a. 11, 12, 13, and 14 Inverter Transfer Switches are in the **INV 1 OR INV 2** position.

   YES / NO / N/A (circle one) _____ SRO

   b. All 120 VAC Vital Bus Voltages are in the acceptable range.

   YES / NO / N/A (circle one) _____ SRO

6.4.B **120 VAC VITAL INVERTERS AND BUSES (Continued)** **INITIALS**

2. Modes 5 and 6 and During movement of irradiated fuel assemblies: (TS SR 3.8.8.1)

   a. Check one of the following:

      ☐ 11, 12, 13 and 14 Inverter Transfer Switches are in the **INV 1** **OR** **INV 2** position.

      ☐ Inoperable 120 VAC Vital Inverters have been evaluated to **NOT** impact equipment required to be Operable for existing conditions. (Maximum of two Inoperable Inverters. One of the remaining Operable Inverters is 11 **OR** 12 and is aligned to an operable diesel.)

      YES / NO / N/A (circle one) _____ SRO

   b. All operable 120 VAC Vital Bus Voltages are in the acceptable range.

      YES / NO / N/A (circle one) _____ SRO

3. This test section is considered satisfactory if YES **OR** N/A was answered in the steps above.

   SAT / UNSAT (circle one) _____ SRO

- **IF** unsat,
  THEN NOTIFY the SM, and take actions as required by Technical Specifications and administrative actions stated in EN-4-104.

- **INITIATE** a Condition Report for all equipment deficiencies.

6.5 D.C. BUSES

INITIALS

NOTE
The Reserve Battery and its disconnect are qualified by T.S.s as replacement for **ONE** 125 VDC station battery and its disconnect at a time.

A. **CHECK MARK** Battery Disconnect Position **AND RECORD** Bus Voltage.

0	11 125 VDC Bus	[C]
	* 95-1103	
11 Bus Voltage_____VDC (1-EI-211)		

0	12 125 VDC Bus	[C]
	* 95-1203	
12 Bus Voltage_____VDC (1-EI-212)		

0	21 125 VDC Bus	[C]
	* 95-2103	
21 Bus Voltage_____VDC (2-EI-221)		

0	22 125 VDC Bus	[C]
	* 95-2203	
22 Bus Voltage_____VDC (2-EI-222)		

(acceptable range of 125 to 140 VDC) **[B0120]**

* When the Reserve Battery is on one 125 VDC Bus in place of the normal station battery, verification of the Reserve Battery disconnect meets the T.S. requirement and a check may be placed in the **[C]** box to indicate this verification has occurred.

6.5 D.C. BUSES (Continued) **INITIALS**

B. **RECORD** Battery Charger output current:

11 Battery:

Charger 11 _____amps (1-II-211) Charger 23 _____amps (1-II-223)

12 Battery:

Charger 12 _____amps (1-II-212) Charger 24 _____amps (1-II-224)

21 Battery:

Charger 13 _____amps (2-II-213) Charger 21 _____amps (2-II-221)

22 Battery:

Charger 14 _____amps (2-II-214) Charger 22 _____amps (2-II-222)

- **IF** NO battery charger **PER** Battery Bus is indicating at least 20 amps,
  THEN CONTACT the Electric Shop and have them verify the applicable charger(s) is(are) properly supplying the DC Battery Bus. (N/A if 20 amps or greater is indicated on at least one Battery Charger **PER** Battery Bus) **[B0307]** _____

_____ _____/_____
Chargers Checked Checked by (EM) Date

6.5 D.C. BUSES (Continued) **INITIALS**

C. **ACCEPTANCE CRITERIA**

> **NOTE**
> Performance of this section constitutes a supervisory review. Actual observation of equipment by the SRO performing this review is not required. Answering YES to a step below signifies the referenced step has been completed and signed off by a qualified operator **other than the SRO reviewer** and the results are acceptable and valid.

1. Modes 1, 2, 3 and 4: (TS SR 3.8.9.1)

   a. 125 VDC Battery Bus Disconnects are closed in step 6.5.A.

   YES / NO / N/A (circle one) _____ SRO

   b. 11, 12, 21, **AND** 22 125 VDC Bus Voltage are in the acceptable range.

   YES / NO / N/A (circle one) _____ SRO

   c. At least one Battery Charger is supplying each DC Battery Bus (11, 12, 21 & 22) in step 6.5.B. **[B0307]**

   YES / NO / N/A (circle one) _____ SRO

2. Modes 5 and 6 and During movement of irradiated fuel assemblies: (TS SR 3.8.10.1)

   a. At least two out of 11, 12, 21 **AND** 22 125 VDC Battery Bus Disconnects are closed in step 6.5.A.

   YES / NO / N/A (circle one) _____ SRO

   b. The voltage on the two buses with the disconnects closed are in the acceptable range.

   YES / NO / N/A (circle one) _____ SRO

   c. At least one Battery Charger is indicating a minimum of 20 amps output current **OR** Electric Shop has verified chargers are supplying DC Battery Bus(es) with the disconnects closed in step 6.5.B. **[B0307]**

   YES / NO / N/A (circle one) _____ SRO

6.5.C **D.C. BUSES (Continued)** **INITIALS**

3. This test section is considered satisfactory if YES **OR** N/A was answered in the steps above.

SAT / UNSAT (circle one) _____ SRO

- **IF** unsat,
  THEN NOTIFY the SM, and take actions as required by Technical Specifications and administrative actions stated in EN-4-104.

- **INITIATE** a Condition Report for all equipment deficiencies.

7.0 POST PERFORMANCE ACTIVITIES

INITIALS

A. **PERFORM** a post-test page check of this STP. _____

8.0 BASES

[B0120] This is the basis that establishes voltage ranges in this surveillance.

[B0307] Letter to Rick Chandlee from S.L. Gambill System Engineer, in reference to the acceptance criteria for the proper operation of the 125 VDC battery chargers. To allow the Electric Shop to take ampere readings to confirm the chargers are supplying the load of the DC Bus and the chargers are supplying the needs of the battery.

[B0327] Q.A. Surveillance S-92-01, concerning the Emergency Bus Tie Breakers and 125 VAC Inverter Manual Transfer Switches in A.C. line. Generic Issues 48 and 49.

[B0649] Plant Design memo DMLS#DE05286 from L.M. Daniels to L. Williams and D.L. Montana dated Jan. 18, 2001, Alternate means to determine 4 kV Bus Voltage.

[B0700] NRM memo from P.S. Furio to S.C. McCord stating that NRM is in agreement with Operations that a physical/local switch walkdown of the Site Power System is not required while performing this STP.

9.0 RECORDS

A. Records generated by this procedure shall be captured and controlled. Prior to transferring records to Document Management for retention, legibility and completeness of the record shall be verified by the transmitting organization.

B. Maintain records as defined in EN-4-104, Surveillance Testing.

CALVERT CLIFFS NUCLEAR POWER PLANT
SURVEILLANCE TEST PROCEDURE
UNIT TWO

STP O-90-2

AC SOURCES AND ON SITE POWER DISTRIBUTION SYSTEMS 7 DAY OPERABILITY VERIFICATION

REVISION 22

SAFETY RELATED

CONTINUOUS USE

Approval Authority: M. V. Seckens 12/7/01
Signature/Date

Effective Date: 12/7/01

SURVEILLANCE TEST PROCEDURES ADDITIONAL COVER SHEET INFORMATION

A. **Test Performance**

Permission to perform test: _____ / _____
Shift Manager Date

B. **Test completion, results review and approval** (Circle appropriate answer)

Accept. Criteria in spec?	YES NO N/A	Adjustments made?	YES NO N/A
As found results in spec?	YES NO N/A	CR submitted?	YES NO N/A
As left results in spec?	YES NO N/A	Malfunctions indicated?	YES NO N/A

REMARKS: _____

Test completed by: _____ / _____
Date

Analysis of results: _____

Shift Manager review: _____ / _____
Date

Analysis/Comments: _____

Functional Surveillance
Test Coordinator: _____ Date: _____

EQSE (if required): _____ Date: _____

* PORC Meeting No.: _____ Date: _____

* Plant General Manager: _____ Date: _____

* Required only if completed test on SR and designated NSR structures, systems and components (per Q List) identified a malfunction or were out of specification.

Attach a separate sheet, if necessary, to document additional comments.

TABLE OF CONTENTS

	TITLE	PAGE
1.0	PURPOSE	5
2.0	APPLICABILITY/SCOPE	5
3.0	REFERENCES AND DEFINITIONS	7
4.0	PREREQUISITES	7
5.0	PRECAUTIONS	7
6.0	PERFORMANCE	8
6.1	500 KV, 69 KV & 13 KV POWER	8
6.2	4 KV EMERGENCY BUSES	14
6.3	480 V EMERGENCY BUSES	17
6.4	120 VAC VITAL INVERTERS AND BUSES	20
6.5	D.C. BUSES	22
7.0	POST PERFORMANCE ACTIVITIES	26
8.0	BASES	26
9.0	RECORDS	26

LIST OF EFFECTIVE PAGES

PAGE NUMBER	REVISION
1-26	22

PROCEDURE ALTERATIONS

PAGE NUMBER	REVISION/CHANGE
14	02202

1.0 PURPOSE

A. This test demonstrates operability of off site and on site power distribution systems by verifying proper breaker alignment and bus voltages.

2.0 APPLICABILITY/SCOPE

A. Completion of this test satisfies the following Technical Specification surveillance requirements:

1. Modes 1, 2, 3, and 4:

   TS SR 3.8.1.1, 3.8.1.2, 3.8.7.1, 3.8.9.1

2. Modes 5 and 6, During movement of irradiated fuel assemblies:

   TS SR 3.8.2.1, 3.8.8.1, 3.8.10.1

B. Test Requirements:

1. This test shall be performed by individuals qualified on the watch stations for the affected equipment.

2. The Shift Manager shall determine if a pre-test briefing is required and direct the SRO accordingly.

C. All voltages and amp readings will be taken using the specified Control Room indication. If the specified Control Room indicator is out of service, then obtain the required reading, using the alternate indication, in the order of preference listed below:

1. If the specified Control Room 4 kV bus voltage meter for the Safety Related busses is out of service, then voltage may be read from the associated Synchronizer Running Voltmeter. The 4 kV bus voltage reading is obtained by multiplying the Synchronizer Running Voltmeter indication by 35. The results shall be peer checked and recorded in the remarks section. The sync stick must be used for the Synchronizer Running Voltmeter to indicate the bus voltage. When using the sync stick, an open associated 4 kV breaker is preferred for reduced trip risk. **[B0649]**

2. If Control Room indication is out of service, then use local indications and note it in the remarks.

3. If local indications are not available, then appropriate portable, calibrated test instrumentation may be used by qualified personnel. If portable test equipment is used, then record the following in the remarks:

   - parameter/indicator the test instrument was used for
   - type of meter used
   - meter serial number
   - calibration due date **OR** date calibrated
   - specific reason the permanent plant indication can not be used

2.0 APPLICABILITY/SCOPE (Continued)

D. Individual sections may be performed to satisfy the following Technical Specification requirements as follows:

TS Requirement	Section to be performed
• 3.8.1.1, 3.8.1.2	6.1, 6.2
• 3.8.2.1	6.1, 6.2
• 3.8.7.1, 3.8.9.1	6.2, 6.3, 6.4
• 3.8.8.1, 3.8.10.1	6.2, 6.3, 6.4
• 3.8.9.1	6.5
• 3.8.10.1	6.5

E. **CHECK MARK** the reason for performing this STP:

☐ Scheduled Surveillance

☐ Operability Verification
(Note purpose and list steps in Pre-surveillance Remarks)

Sections 6.1 through 6.5 are independent subsections that may be omitted in their entirety for equipment not tested.

MO/CR #:_____

Pre-surveillance
Remarks:_____

_____

_____

_____

_____

Determination made by:_____
(SRO)

3.0 REFERENCES AND DEFINITIONS

3.1 REFERENCES

A. DRAWINGS

1. 61-001-E, Electrical Main Single Line Diagram
2. 61-030-E, Single Line Diagram Vital 120 VAC & 125 VDC Emergency 250 VDC
3. 2E76 Sheet 22 and 23, Reactor Safeguards Motor Operated Valves

B. Procedures

1. EN-4-104, Surveillance Testing

C. Codes and Standards

1. Technical Specifications

3.2 DEFINITIONS

A. During the performance of this procedure the following convention will be used for breaker position:

1. O = Open, C = Closed.
2. Normal positions for Modes 1,2,3, and 4 will be [Bracketed] **AND Bolded.**

4.0 PREREQUISITES

	INITIALS
A. A pre-test briefing has been held. (N/A if Shift Manager has determined that a pre-test briefing not required.)	_____ SRO
B. **PERFORM** a pre-test page check of this STP.	_____

5.0 PRECAUTIONS

NONE

6.0 PERFORMANCE

_____/_____/U2_____
Date Time Mode

NOTE
The SRO operability evaluation for each section of this STP may be performed after all sections of the STP have been completed to prevent unnecessary delays in the performance of the surveillance.

6.1 500 KV, 69 KV & 13 KV POWER

INITIALS

A. **CHECK MARK** Switchyard breaker position **AND RECORD** bus voltage:

NOTE
A breaker **AND** its associated disconnects must be closed to be marked closed for this surveillance.

Waugh Chapel						Chalk Point		
0	Line 5051	[C]	0	Line 5052	[C]	0	Line 5072	[C]
	552-21			552-41			552-61	
	552-23			552-43			552-63	
	552-22						552-62	
0	Line 5051 Disconnect	[C]				0	Line 5072 Disconnect	[C]
	89-IL						89-2L	
0	11 Serv Bus 13 KV FDR	[C]	0	21 Serv Bus 13 KV FDR	[C]			
	252-1104			252-2104				

11 13 KV Bus Volts_____KV (1-EI-307)

21 13 KV Bus Volts_____KV (2-EI-321)
(Accept. range of 12.45 to 15.2 KV) [B0120]

6.1 500 KV, 69 KV & 13 KV POWER (Continued) **INITIALS**

B. **CHECK** 500 KV lines 5051, 5052 **AND** 5072 in service at Waugh Chapel **OR** Chalk Point.

1. **CHECK MARK** one of the following:

☐ Line power indication of a minimum of 20 Megawatts in either direction. (1C01)

☐ Call to SO-BPO verifying lines in service.

2. **CIRCLE** the status of each High Line:

Line 5051 in service	YES / NO
Line 5052 in service	YES / NO
Line 5072 in service	YES / NO

C. **CHECK MARK** 23 Bus tie breaker positions:
(N/A if the SMECO Offsite Power Source is **NOT** credited for one of the required High Lines.)

[0]	11 Serv Bus Tie	C		[0]	21 Serv Bus Tie	C	N/A
	252-1105				252-2105		

6.1 500 KV, 69 KV & 13 KV POWER (Continued) **INITIALS**

NOTE
TS SR 3.8.1.1 requires breaker alignment and indicated power availability must be verified every 8 hours when the Offsite Power Source from SMECO is required.

D. 69 KV SMECO

CHECK MARK the following bkr positions:
(N/A if the SMECO Offsite Power Source is **NOT** credited for one of the required High Lines.)

0	Offsite PWR Source from SMECO	[C]	N/A
	252-2301		

- **CHECK** Power availability at 0SH301 by rotating handswitch to all three phase positions **AND** observe SMECO Voltage between 12.45 KV and 15.2KV. **[B0120]**
(N/A if the SMECO Offsite Power Source is **NOT** credited for one of the required High Lines.) _____

[0]	WAREHOUSE NO. 1 DISC	C	N/A
	0SH301		

6.1 500 KV, 69 KV & 13 KV POWER (Continued) **INITIALS**

E. SITE POWER SYSTEM
(N/A if in TS 3.8.1.A) _____

NOTE

It is not required for the operator to conduct a physical/local switch walkdown while performing the following surveillance verification. The use of OI-27B, APPENDIX B, SITE POWER SYSTEM - POSITION DEVIATION SHEET is adequate to comply with the TS surveillance. **[B0700]**

- If a physical/local switch walkdown is desired then it must be conducted by a operator **NOT** standing a Watch Station.

CHECK MARK one of the following:

☐ The Site Power System is in a normal lineup.
There is NO active OI-27B, APPENDIX B, SITE POWER SYSTEM - POSITION DEVIATION SHEET.

☐ The Site Power System is **NOT** in a normal lineup.
There is an active OI-27B, APPENDIX B, SITE POWER SYSTEM - POSITION DEVIATION SHEET **AND** at least ONE of the following conditions are met.

CHECK MARK one of the following:

☐ ALL the following are in the LOCKED OPEN position:

- Switch 3, Position 3
- Switch 4, Position 3
- Switch 12, Position 3

☐ Switch 16, Position 4, is LOCKED OPEN.

☐ Switch 17, Position 4, is LOCKED OPEN.

☐ An evaluation of the current lineup (using DWG 61212-SH0002 and the Deviation Sheet) has been conducted to ensure 13 KV Power Source separation has been maintained:

- Verify DWG 61212-SH0002 revision is current.

6.1 500 KV, 69 KV & 13 KV POWER (Continued) **INITIALS**

F. **ACCEPTANCE CRITERIA**

> **NOTE**
> Performance of this section constitutes a supervisory review. Actual observation of equipment by the SRO performing this review is not required. Answering YES to a step below signifies the referenced step has been completed and signed off by a qualified operator **other than the SRO reviewer** and the results are acceptable and valid.

1. MODES 1, 2, 3 and 4: (TS SR 3.8.1.1 and 3.8.1.2)
(N/A the following if in TS Action 3.8.1.A)

   a. TWO of the four off site sources (Line 5051, 5052, 5072, **OR** SMECO) are operable and available to independently supply 11 **AND** 21 13 KV Buses.

   YES / NO / N/A (circle one) _____ SRO

   b. The SITE POWER SYSTEM alignment maintains 13 KV Power Source separation as indicated by a check mark in Step 6.1.E.

   YES / NO / N/A (circle one) _____ SRO

   c. 11 **AND** 21 13 KV Bus voltage is in the acceptable range.

   YES / NO / N/A (circle one) _____ SRO

2. MODES 1, 2, 3 and 4 when the unit is in TS Action 3.8.1.A:
(TS SR 3.8.1.1 and 3.8.1.2)
(N/A the following if **NOT** in TS Action 3.8.1.A)

   a. ONE of the four off site sources (Line 5051, 5052, 5072, **OR** SMECO) are operable and available to supply 11 **OR** 21 13 KV Buses.

   YES / NO / N/A (circle one) _____ SRO

   b. 11 **OR** 21 13 KV Bus voltage is in the acceptable range.

   YES / NO / N/A (circle one) _____ SRO

6.1.F **500 KV, 69 KV & 13 KV POWER (Continued)** **INITIALS**

3. Modes 5 and 6, During movement of irradiated fuel assemblies: (TS SR 3.8.2.1)

   a. ONE of the four off site sources (Line 5051, 5052, 5072, **OR** SMECO) are operable and available to supply 11 **OR** 21 13 KV Buses.

   YES / NO / N/A (circle one) _____ SRO

   b. 11 **OR** 21 13 KV Bus voltage is in the acceptable range.

   YES / NO / N/A (circle one) _____ SRO

4. This test section is considered satisfactory if YES **OR** N/A was answered in the steps above.

   SAT / UNSAT (circle one) _____ SRO

- **IF** unsat,
  THEN NOTIFY the SM, and take actions as required by Technical Specifications and administrative actions stated in EN-4-104.

- **INITIATE** a Condition Report for all equipment deficiencies.

6.2 4 KV EMERGENCY BUSES — INITIALS

A. **CHECK MARK** breaker position **AND RECORD** bus voltage:

1. 4 KV Bus Feeder Breakers HI Side:

0	U4000-12 13 KV FDR [C]			0	U4000-22 13 KV FDR [C]	
	252-1103				252-2103	

2. 21 4 KV Bus Feeder Breakers:

02202

0	21 4 KV Bus Normal FDR	[C]		[O]	21 4 KV Bus ALT FDR	C		[O]	OC DG 21 4KV BUS FDR	C
	152-2101				152-2115				152-2106	

21 4 KV Bus Volts_____KV (2-EI-421)
(acceptable range of 4.19 to 4.31 KV)

3. 24 4 KV BUS Feeder Breakers:

02202

0	24 4 KV Bus Normal FDR	[C]		[O]	24 4 KV Bus ALT FDR	C		[O]	OC DG 24 4KV BUS FDR	C
	152-2401				152-2414				152-2406	

24 4 KV Bus Volts_____KV (2-EI-424)
(acceptable range of 4.19 to 4.31 KV)

4. **LIST** breakers above that are **NOT** operable **OR DO NOT** have Control Power available:

_____

_____

6.2 4 KV EMERGENCY BUSES (Continued) **INITIALS**

B. **ACCEPTANCE CRITERIA**

NOTE
Performance of this section constitutes a supervisory review. Actual observation of equipment by the SRO performing this review is not required. Answering YES to a step below signifies the referenced step has been completed and signed off by a qualified operator **other than the SRO reviewer** and the results are acceptable and valid.

1. MODES 1, 2, 3 and 4: (TS SR 3.8.1.1, 3.8.1.2, and 3.8.9.1)
(N/A the following if in TS Action 3.8.1.A)

a. **CHECK MARK** one of the following:

☐ 21 **AND** 24 4 KV Service Buses are aligned and powered from their Normal FDR's with their Alternate FDR's OPEN.

☐ 21 **AND** 24 4 KV Service Buses are aligned and powered from their Alternate FDR's with their Normal FDR's OPEN.

☐ 21 **AND** 24 4 KV Service Buses can be realigned to either of the above line-ups by operating breakers with control power available.

YES / NO / N/A (circle one) _____ SRO

b. 21 **AND** 24 4 KV bus voltage is in the acceptable range.

YES / NO / N/A (circle one) _____ SRO

6.2.B **4 KV EMERGENCY BUSES (Continued)** **INITIALS**

2. MODES 1, 2, 3 and 4 when the unit is in TS Action 3.8.1.A: (TS SR 3.8.1.1, 3.8.1.2, and 3.8.9.1) (N/A the following if **NOT** in TS Action 3.8.1.A)

   a. 21 **AND** 24 4 KV Service Buses are lined up and powered from the operable power source by either the Normal FDR **OR** the Alternate FDR.

   YES / NO / N/A (circle one) _____ SRO

   b. 21 **AND** 24 4 KV bus voltage is in the acceptable range.

   YES / NO / N/A (circle one) _____ SRO

3. Modes 5 and 6, During movement of irradiated fuel assemblies operability evaluation: (TS SR 3.8.2.1, and 3.8.10.1)

   a. 21 **OR** 24 4 KV Service Buses is lined up and powered from its Normal **OR** Alternate power supply.

   YES / NO / N/A (circle one) _____ SRO

   b. The operable 4 KV Bus voltage is in the acceptable range.

   YES / NO / N/A (circle one) _____ SRO

4. This test section is considered satisfactory if YES **OR** N/A was answered in the steps above.

   SAT / UNSAT (circle one) _____ SRO

   - **IF** unsat,
     THEN NOTIFY the SM, and take actions as required by Technical Specifications and administrative actions stated in EN-4-104.

   - **INITIATE** a Condition Report for all equipment deficiencies.

6.3 480 V EMERGENCY BUSES

INITIALS

A. **CHECK MARK** breaker position **AND RECORD** bus voltage indication:

1. 21 480 V Emergency Bus:

0	21A 480 V Bus FDR	[C]		0	21B 480 V Bus FDR	[C]
	152-2114				152-2102	
	52-2112				52-2113	
21A 480 V Bus_____V (2-EI-521A)				21B 480 V Bus_____V (2-EI-521B)		
(acceptable range of 445 TO 510 V) **[B0120]**						

2. 24 480 V Emergency Bus:

0	24A 480 V Bus FDR	[C]		0	24B 480 V Bus FDR	[C]
	152-2402				152-2413	
	52-2412				52-2413	
24A 480 V Bus_____V (2-EI-524A)				24B 480 V Bus_____V (2-EI-524B)		
(acceptable range of 445 TO 510 V) **[B0120]**						

3. 480 V MCC Supply:

0	MCC 204	[C]		0	MCC 214	[C]
	52-2409				52-2119	
	52-20401				52-21401	

4. 480 V Bus Cross Ties: **[B0327]**

[O]	MCC 204 TO MCC 214	C		[O]	MCC 214 TO MCC 204	C
	52-20420				52-21420	

6.3.A **480 V EMERGENCY BUSES (Continued)** **INITIALS**

5. MCC power availability:

   a. **CHECK** MCC energized by observing any one of these components having a red or green light energized on panels 2C08 and 2C09 **OR** locally on the breaker panel: (Circle YES if MCC energized, otherwise circle NO)

MCC 204 ENERGIZED	YES / NO (CIRCLE ONE)		MCC 214 ENERGIZED	YES / NO (CIRCLE ONE)
SI-616-MOV	52-20416		SI-617-MOV	52-21416
SI-626-MOV	52-20417		SI-627-MOV	52-21417
SI-636-MOV	52-20418		SI-637-MOV	52-21418
SI-646-MOV	52-20419		SI-647-MOV	52-21419
SI-635-MOV	52-20407		SI-615-MOV	52-21407
SI-645-MOV	52-20408		SI-625-MOV	52-21408

B. **ACCEPTANCE CRITERIA**

NOTE
Performance of this section constitutes a supervisory review. Actual observation of equipment by the SRO performing this review is not required. Answering YES to a step below signifies the referenced step has been completed and signed off by a qualified operator **other than the SRO reviewer** and the results are acceptable and valid.

1. MODES 1, 2, 3, and 4. (TS SR 3.8.9.1)

   a. All 480 V Bus FDR and Supply Breakers in steps 6.3.A.1, 6.3.A.2 and 6.3.A.3 are in their NORMAL CLOSED Position **AND** the Cross Tie Breakers in Step 6.3.A.4 are OPEN.

   YES / NO / N/A (circle one) _____ SRO

   b. 21A, 21B, 24A **AND** 24B Bus Voltage is in the Acceptable Range.

   YES / NO / N/A (circle one) _____ SRO

6.3.B.1 **480 V EMERGENCY BUSES (Continued)** **INITIALS**

c. Power is available on MCCs 204 & 214 in Step 6.3.A.5.a

YES / NO / N/A (circle one) _____ SRO

2. Modes 5 and 6, During movement of irradiated fuel assemblies operability evaluation. (TS SR 3.8.10.1)

a. One of the following 480 V Emergency Service Buses is energized.

- 21A and 21B

OR

- 24A and 24B

YES / NO / N/A (circle one) _____ SRO

b. Bus Voltage is in the Acceptable Range for operable buses.

YES / NO / N/A (circle one) _____ SRO

3. This test section is considered satisfactory if YES **OR** N/A was answered in the steps above.

SAT / UNSAT (circle one) _____ SRO

- **IF** unsat,
  THEN NOTIFY the SM, and take actions as required by Technical Specifications and administrative actions stated in EN-4-104.

- **INITIATE** a Condition Report for all equipment deficiencies.

6.4 120 VAC VITAL INVERTERS AND BUSES

INITIALS

A. **CIRCLE** Manual Transfer Switch Position **AND RECORD** Bus Voltage: **[B0327]**

21 120 VAC Vital Inverter	
[INV 1] [INV 2]	ALT
21 Bus Voltage_____V (2-EI-1921)	

22 120 VAC Vital Inverter	
[INV 1] [INV 2]	ALT
22 Bus Voltage_____V (2-EI-1922)	

23 120 VAC Vital Inverter	
[INV 1] [INV 2]	ALT
23 Bus Voltage_____V (2-EI-1923)	

24 120 VAC Vital Inverter	
[INV 1] [INV 2]	ALT
24 Bus Voltage_____V (2-EI-1924)	

(Acceptable range of 116 to 124 VAC) **[B0120]**

B. **ACCEPTANCE CRITERIA**

NOTE
Performance of this section constitutes a supervisory review. Actual observation of equipment by the SRO performing this review is not required. Answering YES to a step below signifies the referenced step has been completed and signed off by a qualified operator **other than the SRO reviewer** and the results are acceptable and valid.

1. Modes 1, 2, 3 and 4: (TS SR 3.8.7.1)

   a. 21, 22, 23, and 24 Inverter Transfer Switches are in the **INV 1 OR INV 2** position.

   YES / NO / N/A (circle one) _____ SRO

   b. All 120 VAC Vital Bus Voltages are in the acceptable range.

   YES / NO / N/A (circle one) _____ SRO

6.4.B **120 VAC VITAL INVERTERS AND BUSES (Continued)** **INITIALS**

2. Modes 5 and 6, During movement of irradiated fuel assemblies: (TS SR 3.8.8.1)

   a. Check one of the following:

      ☐ 21, 22, 23 and 24 Inverter Transfer Switches are in the **INV 1** **OR** **INV 2** position.

      ☐ Inoperable 120 VAC Vital Inverters have been evaluated to **NOT** impact equipment required to be Operable for existing conditions. (Maximum of two Inoperable Inverters. One of the remaining Operable Inverters is 21 **OR** 22 and is aligned to an operable diesel.)

      YES / NO / N/A (circle one) _____ SRO

   b. All operable 120 VAC Vital Bus Voltages are in the acceptable range.

      YES / NO / N/A (circle one) _____ SRO

3. This test section is considered satisfactory if YES **OR** N/A was answered in the steps above.

   SAT / UNSAT (circle one) _____ SRO

- **IF** unsat,
  THEN NOTIFY the SM, and take actions as required by Technical Specifications and administrative actions stated in EN-4-104.

- **INITIATE** a Condition Report for all equipment deficiencies.

6.5 D.C. BUSES

INITIALS

NOTE
The Reserve Battery and its disconnect are qualified by T.S.s as replacement for **ONE** 125 VDC station battery at a time.

A. **CHECK MARK** Battery Disconnect Position **AND RECORD** Bus Voltage.

0	11 125 VDC Bus	[C]
	* 95-1103	
11 Bus Voltage_____VDC (1-EI-211)		

0	12 125 VDC Bus	[C]
	* 95-1203	
12 Bus Voltage_____VDC (1-EI-212)		

0	21 125 VDC Bus	[C]
	* 95-2103	
21 Bus Voltage_____VDC (2-EI-221)		

0	22 125 VDC Bus	[C]
	* 95-2203	
22 Bus Voltage_____VDC (2-EI-222)		

(acceptable range of 125 to 140 VDC) **[B0120]**

* When the Reserve Battery is on one 125 VDC Bus in place of the normal station battery, verification of the Reserve Battery disconnect meets the T.S. requirement and a check may be placed in the **[C]** box to indicate this verification has occurred.

6.5 D.C. BUSES (Continued) **INITIALS**

B. **RECORD** Battery Charger output current:

11 Battery:

Charger 11 _____amps (1-II-211) Charger 23 _____amps (1-II-223)

12 Battery:

Charger 12 _____amps (1-II-212) Charger 24 _____amps (1-II-224)

21 Battery:

Charger 13 _____amps (2-II-213) Charger 21 _____amps (2-II-221)

22 Battery:

Charger 14 _____amps (2-II-214) Charger 22 _____amps (2-II-222)

- **IF** NO battery charger **PER** Battery Bus is indicating at least 20 amps,
  THEN CONTACT the Electric Shop and have them verify the applicable charger(s) is(are) properly supplying the DC Battery Bus. (N/A if 20 amps or greater is indicated on at least one Battery Charger **PER** Battery Bus) **[B0307]** _____

_____ _____/_____
Chargers Checked Checked by (EM) Date

6.5 D.C. BUSES (Continued) **INITIALS**

C. **ACCEPTANCE CRITERIA**

> **NOTE**
> Performance of this section constitutes a supervisory review. Actual observation of equipment by the SRO performing this review is not required. Answering YES to a step below signifies the referenced step has been completed and signed off by a qualified operator **other than the SRO reviewer** and the results are acceptable and valid.

1. Modes 1, 2, 3 and 4: (TS SR 3.8.9.1)

   a. 125 VDC Battery Bus Disconnects are closed in step 6.5.A.

   YES / NO / N/A (circle one) _____ SRO

   b. 11, 12, 21, **AND** 22 125 VDC Bus Voltages are in the acceptable range.

   YES / NO / N/A (circle one) _____ SRO

   c. At least one Battery Charger is supplying each DC Battery Bus (11, 12, 21 & 22) in step 6.5.B. **[B0307]**

   YES / NO / N/A (circle one) _____ SRO

2. Modes 5 and 6, During movement of irradiated fuel assemblies: (TS SR 3.8.10.1)

   a. At least two out of 11, 12, 21 **AND** 22 125 VDC Battery Bus Disconnects are closed in step 6.5.A.

   YES / NO / N/A (circle one) _____ SRO

   b. The voltage on the two buses with the disconnects closed are in the acceptable range.

   YES / NO / N/A (circle one) _____ SRO

   c. At least one Battery Charger is indicating a minimum of 20 amps output current **OR** Electric Shop has verified chargers are supplying DC Battery Bus(es) with the disconnects closed in step 6.5.B. **[B0327]**

   YES / NO / N/A (circle one) _____ SRO

6.5.C **D.C. BUSES (Continued)** **INITIALS**

3. This test section is considered satisfactory if YES **OR** N/A was answered in the steps above.

SAT / UNSAT (circle one) _____ SRO

- **IF** unsat,
  THEN NOTIFY the SM, and take actions as required by Technical Specifications and administrative actions stated in EN-4-104.

- **INITIATE** a Condition Report for all equipment deficiencies.

7.0 POST PERFORMANCE ACTIVITIES

INITIALS

A. **PERFORM** a post-test page check of this STP. _____

8.0 BASES

[B0120] This is the basis that establishes voltage ranges on this surveillance.

[B0307] Letter to Rick Chandlee from S.L. Gambill System Engineer, in reference to the acceptance criteria for the proper operation of the 125 VDC battery chargers. To allow the Electric Shop to take ampere readings to confirm the chargers are supplying the load of the DC Bus and the chargers are supplying the needs of the battery.

[B0327] Q.A. Surveillance S-92-01, concerning the Emergency Bus Tie Breakers and 125 VAC Inverter Manual Transfer Switches in A.C. line. Generic Issues 48 and 49.

[B0649] Plant Design memo DMLS#DE05286 from L.M. Daniels to L. Williams and D.L. Montana dated Jan. 18, 2001, Alternate means to determine 4 kV Bus Voltage.

[B0700] NRM memo from P.S. Furio to S.C. McCord stating that NRM is in agreement with Operations that a physical/local switch walkdown of the Site Power System is not required while performing this STP.

9.0 RECORDS

A. Records generated by this procedure shall be captured and controlled. Prior to transferring records to Document Management for retention, legibility and completeness of the record shall be verified by the transmitting organization.

B. Maintain records as defined in EN-4-104, Surveillance Testing.

CALVERT CLIFFS NUCLEAR POWER PLANT

UNIT ONE

OP-1

PLANT STARTUP FROM COLD SHUTDOWN

REVISION 59

SAFETY RELATED

REFERENCE USE

APPROVAL AUTHORITY: J. V. Grooms

Effective Date: 7/30/2010

TABLE OF CONTENTS

	TITLE	PAGE
1.0	PURPOSE	5
2.0	APPLICABILITY/SCOPE	5
3.0	REFERENCES AND DEFINITIONS	6
4.0	PREREQUISITES	8
5.0	PRECAUTIONS	9
6.0	PERFORMANCE	14
6.1	PREPARE PRIMARY SYSTEMS FOR MODE 4 ENTRY	14
6.2	PREPARE SECONDARY PLANT FOR RCS HEATUP	18
6.3	SECURE SDC, START RCPs AND ENTER MODE 4	21
6.4	PREPARE SYSTEMS FOR MODE 3	34
6.5	ENTER MODE 3 AND HEATUP TO 375° F	37
6.6	CONTINUE RCS HEATUP TO 2250 PSIA AND 532° F	42
7.0	POST PERFORMANCE ACTIVITIES	49
8.0	BASES	49
9.0	RECORDS	51

FIGURE 1 RCS P/T LIMITS - 11A AND 11B RCPs RUNNING [B2547]

FIGURE 2 RCS P/T LIMITS - 12A AND 12B RCPs RUNNING [B2547]

FIGURE 3 RCS P/T LIMITS - 11A or 11B AND 12A or 12B RCPs RUNNING [B2547]

FIGURE 4 RCS P/T LIMITS - 4 RCPs RUNNING [B2547]

FIGURE 5 NARROW RANGE S/G LEVEL INDICATED vs ACTUAL

FIGURE 6 SIT OUTLET MOV POSITION INDICATION DIAGRAM

FIGURE 7 SDC FLOW CONTROL VALVE, 1-SI-306-CV, POSITION INDICATION DIAGRAM

APPENDIX 1 PRESSURIZER HEATUP LOG

TABLE OF CONTENTS

TITLE		PAGE
APPENDIX 2	RCS HEATUP LOG	
APPENDIX 3	S/G LEVEL TRANSMITTERS PLACED IN SERVICE IN PREPARATION OF RCS HEATUP	
APPENDIX 4	INSTRUMENTS PLACED IN SERVICE AFTER FILLING THE RCS	

LIST OF EFFECTIVE PAGES

PAGE NUMBER	REVISION
1-51	59
FIGURE	
1-7	59
APPENDIX	
1, PGs 1-2	59
2, PGs 1-2	
3, PGs 1-2	
4, PGs 1-2	

PROCEDURE ALTERATIONS

PAGE NUMBER	REVISION/CHANGE
15,18,22,31,39,42-44	05900

1.0 PURPOSE

A. This procedure coordinates and directs actions required to take the plant from Cold Shutdown (Mode 5) with a pressurizer bubble, to Hot Standby (Mode 3).

2.0 APPLICABILITY/SCOPE

A. This procedure may be used to:

- Prepare the Secondary for Start-up **PER** Section 6.2, PREPARE SECONDARY PLANT FOR RCS HEATUP
- take the plant from Mode 5, with a Pressurizer bubble, to Mode 4 or Mode 3
- take the plant from Mode 4 to 3 only

B. Effective use of this procedure requires that Operations Management review plant status for system availability and out-of-service components, that would impact plant startup by entering Technical Specification Action Statements or prohibit system operation. Operations management must determine that adequate equipment is available and that actions are in place to return to service those components needed later during the start-up.

C. Procedure entry points other than at the beginning:

1. **IF** entering this procedure to take the plant from Mode 4 to 3, **THEN** sections 6.1 through 6.3 may be omitted provided these sections are reviewed to ensure the minimum requirements for continued startup, established therein, are met.

2. **IF** plant conditions warrant entering this procedure at an off-normal point (somewhere other than the beginning of section 6.1 or 6.4), **THEN** the previous sections may be omitted provided they are reviewed to ensure the minimum requirements for continued startup, established therein, are met. **ALL** steps in the section entered must be signed off **OR** have CRS/SM permission **NOT** to be performed.

2.0 APPLICABILITY/SCOPE (Continued)

D. This procedure shall be used as follows:

1. With the approval of the CRS or SM, two or more steps within a section may be performed concurrently **OR** out of order. The steps must be evaluated in the sequence listed **AND** be determined not to be dependent upon the actions of other steps within that section.

2. With the approval of the CRS or SM, a step may be delayed **OR** not performed if equipment availability prevents its immediate performance. The step must be evaluated in the sequence listed **AND** determined not to impact the performance of the startup by prohibiting integrated plant operation **OR** entry into Technical Specification Action Statements to which Tech Spec LCO 3.0.4 applies.

3. When encountering a step whose actions have already been performed (e.g.; step says to start a pump and the pump is already running), equipment status shall be reviewed to ensure that existing conditions meet the intent of the step, and with the concurrence of the CRS or SM the step may be signed off.

4. Conditional steps (If, Then) may be marked N/A if the condition does not exist or apply.

5. Steps with initial spaces shall be initialed when completed.

6. This procedure is used in conjunction with OP-6 in order to perform a plant start-up. System lineups in OP-6 shall be completed, or have GS-SO exemption, for the systems required to support startup as they are called upon in this procedure.

7. This procedure may be used in conjunction with OP-7 when performing a plant start-up. When OP-7 is the controlling document, performance of steps in this OP shall be evaluated by the CRS or SM.

3.0 REFERENCES AND DEFINITIONS

3.1 DEVELOPMENTAL REFERENCES

A. Technical Specifications

B. P&IDs

1. OM-72 (60-729E), REACTOR COOLANT SYSTEM

2. OM-73 (60-730E), CHEMICAL & VOLUME CONTROL SYSTEM

3. OM-74 (60-731E), SAFETY INJECTION & CONTAINMENT SPRAY SYSTEMS

3.2 PERFORMANCE REFERENCES

A. OI-1A, Reactor Coolant System and Pump Operations

3.2 PERFORMANCE REFERENCES (Continued)

B. OI-1B, Quench Tank Operations

C. OI-1H, Pressurizer Pressure Control

D. OI-1I, Reactor Vessel Water Level Monitoring System

E. OI-2A, Chemical and Volume Control System

F. OI-2B, CVCS Boration, Dilution and Makeup

G. OI-2D, Purification System Operation

H. OI-3A, Safety Injection and Containment Spray

I. OI-3B, Shutdown Cooling

J. OI-5A, Containment and Cavity Cooling

K. OI-5C, CEDM Cooling

L. OI-8A, Steam Generator Blowdown System

M. OI-8C, Main Steam and Moisture Separator Reheater Vents and Drains

N. OI-9B, Main Turbine and Steam Generator Feed Pump Turbine Steam Seal System

O. OI-11A, Condensate System

P. OI-11D, Condensate and Feed System Layup and Layup Recovery

Q. OI-12A, Feedwater System

R. OI-12B, Steam Generator System

S. OI-13, Condenser Air Removal

T. OI-14A, Circulating Water System

U. OI-27D, Station Power 480 Volt System

V. OI-32A, Auxiliary Feedwater System

W. OI-34, Engineered Safety Features Actuation System

X. OI-36, Containment Purge System

Y. OI-43A, Main Turbine and Generator/Exciter Operation

Z. OP-6, Pre-Startup Checkoff

AA. STP O-5B-1, AFW Flowpath Verification

3.2 PERFORMANCE REFERENCES (Continued)

AB. STP O-63-1, Remote Shutdown and Post Accident Monitoring Instr Channel Check

AC. STP M-572A, Cold Leg Temperature Instrument Calibration Check, 1-TE-115 & 1-TE-125

AD. STP M-572B, Pressurizer Pressure Calibration Check 1-PT-103 and 1-PT-103-1

AE. STP M-672B, Pressurizer Relief Valve (ERV) Channel Functional Test

AF. NO-1-117, Integrated Risk Management

AG. EN-1-115, Recording of Plant Transients/Operational Cycles

AH. NO-1-103, Conduct of Lower Mode Operations

AI. NO-1-200, Conduct of Operations

AJ. NO-1-206, Alarm Annunciator Control

AK. NO-1-210, Safety Function Determination Program

AL. NEOP-301, Operator Surveillance Procedure

3.3 DEFINITIONS

A. **MAJOR CHANGES** in RCS boron concentration are defined as any change greater than 50 PPM when one of the following is occurring: **[B0271][B0272]**

- Boration from 0% power to shutdown margin
- Boration from 0% power to refueling boron concentration
- Boration from shutdown margin to refueling boron concentration
- Dilution from shutdown margin to ECC
- Dilution from refueling boron concentration to shutdown margin
- Dilution from refueling boron concentration to ECC

4.0 PREREQUISITES

A. Unit 1 is in Mode 5 with a pressurizer bubble. Not Required for Section 6.2, PREPARE SECONDARY PLANT FOR RCS HEATUP ____

B. A dedicated SRO is assigned to supervise RCS filling operations and plant heatup. (Ref. NO-1-200) ____

C. Sufficient capacity exists in Reactor Coolant Waste Processing System (RCW) for heatup. ____

D. RCW aligned to accept CVCS diversion flow. ____

E. **IF** SDC Purification is secured,
THEN CVCS DIVERSION TO DEGAS ISOL, 1-CVC-325, is open. ____

5.0 PRECAUTIONS

NOTE

- **ALL** equipment tagged for purposes of this procedure shall use red danger tags unless specifically directed to use a caution tag.
- **ALL** caution tags used for LTOP should state that the equipment is under LTOP control and is to be operated only with SM or CRS approval when directed by appropriate procedures.

A. **WHEN** RCS temperature is less than 365° F (as read on TI-112C **OR** TI-122C) **AND** the RCS is vented less than eight square inches (8 in^2), **THEN** the following Low Temperature Overpressure Protection (LTOP) controls shall be followed: **[B0064][B0599]**

1. **INADVERTENT RCP START SAFEGUARDS BELOW 150° F**

NOTE

IF the RCP LTOP tags were cleared in OP-7 in preparation for entering this procedure, **THEN** the RCP tagout needs to be rehung if a delay or termination of the heatup occurs and RCPs are secured.

a. **ALL** RCPs are caution tagged by **TWO** of the following four methods:

- RCP handswitches (two per RCP) in PULL TO LOCK and RCP Breaker Trip Fuses (two per RCP) installed
- RCP Feeder Breaker handswitches in PULL TO LOCK and RCP Feeder Breaker Trip Fuses installed
- **ALL** eight RCP breakers racked out
- Both feeder breakers 252-1201 and 252-2202 racked out

2. **MASS ADDITION SAFEGUARDS**

a. Two HPSI pumps are tagged with their breakers racked out **OR** their discharge valves locked shut **AND** the third HPSI pump handswitch is caution tagged in PULL TO LOCK.

b. **ALL** eight MAIN and AUX HPSI Loop Isolation valves are caution tagged shut in PULL TO OVERRIDE.

c. SI TO CHG HDR, 1-CVC-269-MOV, is caution tagged shut.

d. **WHEN** the RCS is vented less than 2.6 square inches (2.6 in^2), **THEN** HPSI injection flow from the RWT shall be limited to less than 210 GPM **AND** through a single HPSI Loop Isolation valve only.

5.0.A PRECAUTIONS (Continued)

3. **OVERPRESSURE PROTECTION**

a. Both PORVs shall be operable with:

* STPs M-572A, M-572B and M-672B current

* Both PORV handswitches in MPT ENABLE:

  - 1-RC-402-ERV....1-HS-1406
  - 1-RC-404-ERV....1-HS-1408

* Both PORV Override Shut/Auto handswitches in AUTO:

  - 1-RC-402-ERV....1-HS-1402
  - 1-RC-404-ERV....1-HS-1404

* Both PORV Block valves open

NOTE

Initiation of compensatory actions **PER** NO-1-206 is required when the SDC PRESS HI alarm is INACTIVE.

b. **IF** the Plant Computer is available **AND** SDC is in operation, **THEN** a computer alarm for points, P103 and P103A, is established with a setpoint of 250 PSIA to warn the operator of a pressure excursion.

B. To prevent core uplift, do **NOT** operate more than three RCPs when RCS temperature is less than 300° F.

C. Do **NOT** exceed the following RCS heatup rates:

RCS Temperature	Maximum Heatup Rate
70° F to 246° F	80° F per hour
Greater than 246° F	100° F per hour

D. Pressurizer linear heatup rate is limited to 100° F per hour.

E. Do **NOT** exceed the following RCS cooldown rates:

RCS Temperature	Maximum Cooldown Rate
Greater than 256° F	100° F per hour
256° F to 106° F	40° F per hour
Less than 106° F	35° F per hour

F. **WHEN** a bubble exists in the Pressurizer, **THEN** the Pressurizer water temperature shall be maintained at least 30° F greater than the highest RCS loop temperature.

5.0 PRECAUTIONS (Continued)

G. **WHEN** S/G primary **OR** secondary temperature is less than 85° F, **THEN** primary and secondary pressures shall be maintained less than 195 PSIA. (This is 5° F and 20 PSI more restrictive than the requirements of TRM 15.7.1, which requires S/G temperature greater than 80° F when S/G pressure is greater than 215 PSIA.)

H. RCS pressure and temperature shall be maintained within the limitations of FIGURE 1, FIGURE 2, FIGURE 3 **OR** FIGURE 4 (depending on RCP configuration).

I. RCPs and LPSI pumps may be secured for up to one hour to accommodate the transition between SDC and RCP operation, provided:

- No operations are permitted that would cause introduction of coolant into the Reactor Coolant System with boron concentration less than that required to meet the minimum boron concentration of LCO 3.1.1.
- Core outlet temperature is maintained at least 10° F below saturation temperature

J. To prevent challenging SDC suction header piping, RCS pressure shall be maintained less than 250 PSIA whenever the SDC suction valves are open.

K. To minimize high-energy line break concerns, the amount of time the RCS temperature is greater than 200° F will be minimized whenever the SDC Header Return Isolation Valves are open

L. Criticality shall be anticipated whenever heatup **OR** cooldown **OR** dilution operations **OR** CEA withdrawals are in progress. **[B0138]**

M. To prevent condensation in the CEDM Coils, the CEDM Cooling or Cavity Cooling systems should **NOT** normally be operated when RCS temperature is less than 300° F.

N. Severe waterhammer may result if RCS temperature is greater than 200° F, and Main Feedwater flow is restored after it has been stopped for greater than 80 minutes. To prevent water hammer in the Main Feed Ring (MFR), Main Feedwater Gooseneck Purge shall be performed to restore Main Feedwater flow.

O. Manual operation of automatically controlled systems should **NOT** be performed unless a malfunction is apparent **AND** automatic system operation will **NOT** support continued plant operation **OR** as needed to conduct testing.

P. Systems shifted to manual operation shall be monitored frequently to ensure correct operation.

5.0 PRECAUTIONS (Continued)

Q. The following radiological precautions shall be followed:

- **ALL** fluids vented from contaminated systems shall be treated as radioactively contaminated until certified clean by Chemistry
- Radiation Safety Supervision shall be notified of any venting or draining operations in the RCA

R. To prevent an inadvertent loss of RCS inventory, closely monitor RCS and VCT levels when performing evolutions that could affect RCS inventory, such as manipulating Safety Injection or CVCS components. **[B0138]**

S. Limitations on RCS dilution from non-borated water sources in Mode 3, 4 or 5 are as follows:

1. No RCS heatup **SHALL** be in progress. **[B0221]**
2. The RCS shall be filled and vented.
3. The amount of dilution water has been calculated for the dilution method used **PER** OI-2B.
4. Targeted RCS boron concentration is the same or greater than the boron concentration for Shutdown Margin **PER** NEOP-301.
5. Dilution water shall be added in a minimum of two batches with Chemistry sampling and analyzing the RCS after each batch, to ensure the boron concentration is maintained greater than Shutdown Margin **PER** NEOP-301.
6. Within one hour of **AND** at least once per hour during a reduction of RCS boron concentration, RCS flow rate shall be determined to be at least 3000 GPM by verifying **ONE** of the following:
   - At least one RCP running
   - SDC in service with at least 3000 GPM flow through the RCS
7. The dilution rate shall be less than or equal to 88 GPM unless an RCP is in operation.

5.0 PRECAUTIONS (Continued)

NOTE

A S/G is considered available for heat removal when **ALL** of the following conditions exist: **[B0015]**

- Secondary side actual water level is greater than (-)40 inches
- Secondary side is intact
- Associated ADV is available to relieve steam
- Steam-driven AFW Pump available
- RCS is capable of being pressurized

It's preferred to have the S/G tubes full, **BUT NOT** required due to time available would be less for time to boil **AND** equilibrium temperature reached in a long-term LOSDC is higher with U-tubes drained.

T. **IF** both S/Gs are **NOT** available for heat removal **AND** the Pressurizer manway is installed,
THEN the equipment listed in NO-1-200, CONTROL OF SHIFT ACTIVITIES shall be available for the existing plant condition. **[B0066] [B0116]**

U. **WHEN** performing a **MAJOR CHANGE** in RCS boron concentration,
THEN VERIFY that at least one RCP is running **AND** PZR spray is in operation until the desired boron concentration has been **REACHED AND VERIFIED.** **[B0271][B0272]**

V. If diluted pockets are suspected in the RCS, PWR Reload Analysis must be notified to determine a process for starting RCPs. **[B0272]**

W. TI-112C and TI-122C SHALL be used for LTOP and Tech Spec temperature limits because TIA-115 and TIA-125 have instrument uncertainties greater than those accomodated for by LTOP analysis. **[B0599]**

X. Operation of Charging Pumps with incorrectly set or failed discharge desurgers or suction stabilizers can result in failure of CVCS piping, CVCS piping supports, or pump damage.

6.0 PERFORMANCE

NOTE
Section 6.2, PREPARE SECONDARY PLANT FOR RCS HEATUP, is an independent section that may be performed concurrently with Section 6.1, PREPARE PRIMARY SYSTEMS FOR MODE 4 ENTRY.

6.1 PREPARE PRIMARY SYSTEMS FOR MODE 4 ENTRY

NOTE
Major steps (A, B, C...) in this section may be performed concurrently or in any order.

A. **INITIATE** completion of OP-6, Section 6.1. ____

B. **IF** CET temperature indication is available on PAMS,
THEN ENSURE the temperature alarm setpoint, HICET_SETPT is 700° F **PER** OI-11, Post Accident Monitoring System Instrumentation.

C. **REQUEST** I&C to ensure that the RCS instrumentation listed in APPENDIX 4, INSTRUMENTS PLACED IN SERVICE AFTER FILLING THE RCS, is in service. ____

D. **CHECK** that the temporary Pressurizer vent rig is removed and flanged off. ____

E. **ENSURE** all RCP CBO flows indicate flow. ____

1. **IF** an excess flow check valve is suspected to be shut,
THEN PERFORM the following:

a. **CHECK** all RCPs are secured. ____

b. **SHUT** the RCP CBO Isolation valves:

- RCP BLEED-OFF OUTBD ISOL, 1-CVC-505-CV ____
- RCP BLEED-OFF INBD ISOL, 1-CVC-506-CV ____

c. **OBSERVE** all RCP CBO flows respond as expected. ____

d. **WHEN** adequate time to allow equalization across the excess flow check valve has elapsed,
THEN OPEN the RCP CBO Isolation valves:

- RCP BLEED-OFF OUTBD ISOL, 1-CVC-505-CV ____
- RCP BLEED-OFF INBD ISOL, 1-CVC-506-CV ____

e. **ENSURE** all RCP CBO flows indicate flow. ____

(1) **REPEAT** steps E.1.a through E.1.d as desired.

6.1 PREPARE PRIMARY SYSTEMS FOR MODE 4 ENTRY (Continued)

NOTE

- The intent is to run one Charging Pump during the startup, **AND** to make adjustments to its desurger per OI-2A, Section titled: ADJUSTING CHARGING PUMP DISCHARGE DESURGERS WHEN RCS PRESSURE IS BELOW NORMAL OPERATING PRESSURE, as RCS pressure is raised.
- The other two Charging Pumps discharge desurgers can be set at known pressures, **AND** can be adjusted as required, if the pump will be placed in service.

05900

F. **ENSURE** Charging Pumps are prepared for operation **PER** OI-2A, Section titled: PRESSURIZING CHARGING PUMP SUCTION STABILIZERS AND DISCHARGE DESURGERS, as follows: 05900

- **ENSURE** at least one Charging Pump has its discharge desurger prepared for operation at the current RCS pressure. ____
- **IF** available, **THEN ENSURE** one Charging Pump has its discharge desurger prepared for operation at an intermediate RCS pressure. ____
- **IF** available, **THEN ENSURE** one Charging Pump has its discharge desurger prepared for operation at normal RCS pressure. ____

G. **RE-ESTABLISH** setpoints for ESFAS signals as follows:

1. **IF** SIAS Pressurizer Pressure signals are unblocked, **THEN RE-ESTABLISH** SIAS Pressurizer Pressure blocks **PER** OI-34. ____
2. **IF** SGIS signals are unblocked, **THEN RE-ESTABLISH** SGIS blocks **PER** OI-34. ____
3. **PERFORM** an Independent Verification that SIAS Pressurizer Pressure **AND** SGIS potentiometers are set to the values found in the Setpoint File. ____

H. **IF** Containment Purge was utilized during this outage, **THEN PERFORM** the following:

1. **NOTIFY** the Machine Shop to install the blind flanges on Containment Purge penetrations. ____
2. **ENSURE** an LLRT has been performed on the Containment Purge penetrations. ____
   a. **WHEN** the LLRT is completed, **THEN LOG** that an LLRT has been performed on the Containment Purge penetrations in fulfillment of Tech Spec SR 3.6.1.1. ____

I. **REQUEST** Chemistry to sample the RCS for O_2 in preparation for Mode 4 entry. ____

6.1 PREPARE PRIMARY SYSTEMS FOR MODE 4 ENTRY (Continued)

J. **PRIOR** to entering Mode 4, **VERIFY** the RCS boron concentration is less than 2700 PPM **OR** a Boron Inventory Verification calculation has been performed by Chemistry to ensure existing quantity of sodium tetraborate is sufficient for the existing RCS boron concentration. **[B0203]** ____

1. **IF** RCS boron concentration is greater than 2700 PPM, **THEN ENTER** a note on the Shift Turnover Sheet **NOT** to makeup to 11 **OR** 12 BASTs until RCS boron concentration is less than or equal to 2700 PPM. ____

> **NOTE**
> The Boron Inventory Verification calculation must be performed prior to makeup to the BASTs

a. **IF** makeup to the BASTs is necessary, **THEN** prior to filling the BASTs, **REQUEST** Chemistry to perform a Boron Inventory Verification calculation to ensure existing quantity of sodium tetraborate is sufficient for the new boron inventory. ____

K. **REQUEST** Chemistry to sample the SITs for boron concentration. ____

1. **IF** any SIT boron concentration is less than 2450 ppm **OR** level below 187 inches, **THEN RAISE** its boron concentration to between 2450 and 2700 ppm **OR** level to greater than 187 inches **PER** OI-3A, section titled, FILLING SAFETY INJECTION TANK(S) WHILE IN COLD SHUTDOWN. ____

L. **ALIGN** the SIT Outlet MOVs as follows:

1. **ENSURE** SIT Outlet MOV handswitches in SHUT:

- 11A 1-SI-614-MOV.....1-HS-3614 ____
- 11B 1-SI-624-MOV.....1-HS-3624 ____
- 12A 1-SI-634-MOV.....1-HS-3634 ____
- 12B 1-SI-644-MOV.....1-HS-3644 ____

2. **UNLOCK AND PLACE** SIT Outlet MOV breakers in the ON position:

- 11A 1-SI-614-MOV.....52-11442 ____
- 11B 1-SI-624-MOV.....52-11443 ____
- 12A 1-SI-634-MOV.....52-10442 ____
- 12B 1-SI-644-MOV.....52-10443 ____

6.1 PREPARE PRIMARY SYSTEMS FOR MODE 4 ENTRY (Continued)

M. **VERIFY** Containment Closure Inspection, OP-6, Section 6.2, has been completed. ____

****** END ******

6.2 PREPARE SECONDARY PLANT FOR RCS HEATUP

A. **REQUEST** Chemistry to sample the S/Gs. ____

B. **NOTIFY** Chemistry that local S/G sample points will be unavailable when the S/G level transmitters are placed in service. ____

C. **REQUEST** I&C to remove the temporary tygon tubing level indicator, fill the reference legs, vent and place in service the S/G level transmitters listed in APPENDIX 3, S/G LEVEL TRANSMITTERS PLACED IN SERVICE IN PREPARATION OF RCS HEATUP. ____

D. **ENSURE** 12 or 22 SERVICE BUS is energized, to allow for RCP starting. ____ 05900

E. **ENSURE** all required 13 KV cable testing complete and satisfactory, per Electrical Maintenance, to allow for RCP starting. ____ 05900

NOTE

- Actual S/G level may be determined by comparing remote indicated level to FIGURE 5, NARROW RANGE S/G LEVEL INDICATED vs ACTUAL.
- It is preferrable to maintain S/G levels low in the band, approximately -35" actual level, so AFW can be used to limit RCS heatup after RCPs are started.

F. **ENSURE** that both S/Gs are between (-)40 and (+)60 inches actual level. ____

G. **IF** the Condensate System is secured,
THEN PERFORM ONE of the following: (check one) ____

☐ **IF** the Condensate System has been secured for an extended period **OR** based on Chemistry recommendations,
THEN INITIATE condensate cleanup methods **PER** OI-11D.

☐ **PLACE** the Condensate System in operation, with the Condensate Booster pumps secured, **PER** OI-11A.

H. **IF** the Unit is returning from an extended outage,
THEN ENSURE S/Gs are aligned for startup **PER** OI-12B, Appendix titled S/G ALIGNMENT FOR STARTUP FOLLOWING AN OUTAGE. ____

6.2 PREPARE SECONDARY PLANT FOR RCS HEATUP (Continued)

NOTE
OP-2 directs establishing Condenser vacuum if equipment availability precludes establishing Condenser vacuum at this point.

I. **IF** permissible,
THEN ESTABLISH Condenser Vacuum as follows:

1. **REQUEST** Chemistry to ensure the Secondary Sample Sink is in operation **OR** provisions are made to monitor Hotwell conductivity while placing the Circulating Water system in service. ____

2. **PLACE** the Circulating Water system in service **PER** OI-14A. ____

3. **ENSURE** both Main Feedwater pump Turbines are on their turning gears **PER** OI-12A **OR** isolated from the Main Condenser. ____

4. **PLACE** the Gland Seal and Exhaust System in operation using Auxiliary Steam **PER** OI-9B. ____

5. **IF** the Unit is returning from an extended outage,
THEN ENSURE the High Pressure Drains are aligned to the Aux Blowdown Tank **PER** OI-8C section, Startup High Pressure Drains. ____

6. **ESTABLISH** Main Condenser Vacuum **PER** OI-13. ____

7. **IF** desired,
THEN OPEN both MSIVs:

   - 11 MSIV.....1-MS-4043-CV ____
   - 12 MSIV.....1-MS-4048-CV ____

6.2 PREPARE SECONDARY PLANT FOR RCS HEATUP (Continued)

NOTE

Step 6.2.J may be N/A'ed if the Unit has been in Cold Shutdown for less than or equal to 30 days **OR** STP O-67B-1 Sections 6.3 & 6.4 have been completed satisfactorily within the last 30 days.

CAUTION

- Do **NOT** exceed the following RCS cooldown rates:

RCS Temperature	Maximum Cooldown Rate
Greater than 256° F	100° F per hour
256° F to 106° F	40° F per hour
Less than 106° F	35° F per hour

- To prevent cooldown of the S/Gs below 100° F, limit S/G level rise to 2 inches during AFW testing.

J. **PERFORM** STP O-5B-1 to verify the flow path from the CST to both S/Gs via each Auxiliary Feedwater pump. ____

- **LOG** initiation of AFW flow in the Transient Tracking Log. ____
- **LOG** completion of STP O-5B-1, stating the runs were made to fulfill Tech Spec SR 3.7.3.7. ____

****** END ******

6.3 SECURE SDC, START RCPs AND ENTER MODE 4 — INITIALS

NOTE

- This section directs a relatively quick transition from SDC to RCS forced circulation using RCPs and entry to Mode 4.
- This section requires operator actions inside Containment to:
  - obtain S/G secondary temperatures
  - check L/D EXCESS FLOW CKV BYP, 1-CVC-344, locked shut
  - support RCP starts

A. Prerequisite sections completed: 6.1, 6.2. ____

B. **REQUEST** Chemistry to sample the RCS and Quench Tank for O_2 concentration while continuing with this section. ____

C. **IMPLEMENT** Control Room access restrictions **PER** NO-1-200. ____

D. **ENSURE** the following:

1. I&C has completed placing in service the RCS instrumentation listed in APPENDIX 4, INSTRUMENTS PLACED IN SERVICE AFTER FILLING THE RCS. ____
2. I&C has completed placing in service the S/G level instrumentation listed in APPENDIX 3, S/G LEVEL TRANSMITTERS PLACED IN SERVICE IN PREPARATION OF RCS HEATUP. ____
3. Pressurizer level between 144 and 170 inches. **[B0064]** ____
4. Pressurizer pressure is less than 300 PSIA. **[B0064]** ____
5. Primary temperatures are greater than or equal to 100° F **AND** secondary temperatures are greater than or equal to 85° F. ____

6.3.D SECURE SDC, START RCPs AND ENTER MODE 4 (Continued) **INITIALS**

NOTE

- If SDC is secured, RCS temperature shall be determined using RCS T_{AVG} (the average of RCS T_{HOT} and T_{COLD}) from the loop with the largest delta T
  - (11 loop) 1-TI-112H, 1-TI-112C
  - (12 loop) 1-TI-122H, 1-TI-122C
- If SDC is in operation, RCS temperature shall be determined using the SDC Temperature Recorder, 1-TR-351, **OR** computer points as follows:
  - If **NO** LPSI flow rate changes have been made in the previous 30 minutes, using the average SDC Temperature (the average of FROM RCS(red pen) and TO RCS(blue pen) **OR** computer points T351X and T351Y
- **IF** SDC is in operation, **AND** RCS temperature can **NOT** be obtained by averaging, **THEN** RCS temperature shall be determined using the SDC Temperature Recorder, 1-TR-351, **OR** computer points as follows:
  - S/G 30° F above RCS temperature: RCS temperature shall be determined using TO RCS(blue pen) **OR** computer point T351X
  - S/G below RCS temperature: RCS temperature shall be determined using FROM RCS(red pen) **OR** computer point T351Y
- Steam Generator temperature is obtained locally using a hand-held surface instrument on the Steam Generator shell between the Steam Generator Tube Sheet and water level covering the tubes

6. Steam Generator temperature limits are as follows:
   - S/G temperature is no greater than 30° F above RCS temperature **[B0064]** ____
   - **IF** RCS temperature is 146° F or less, **THEN** S/G temperature is no more than 50° F below RCS temperature **[B0410]** ____
   - **IF** RCS temperature is greater than 146° F, **THEN** S/G temperature is no more than 60° F below RCS temperature **[B0410]** ____
7. RCP LTOP tagout cleared. ____
8. Power aligned to the RCP breakers **PER** OI-27B, Section titled: OPERATION OF RCP BUS FEEDER BREAKERS. ____ 05900
9. **ALL** operations that could cause dilution of the RCS boron concentration are terminated until an RCP is running. **[B0271]** ____

6.3.D SECURE SDC, START RCPs AND ENTER MODE 4 (Continued) **INITIALS**

10. Core outlet temperature is being maintained at least 10° F below saturation temperature for RCS pressure until an RCP is running. ____

11. PZR SPRAY VLV CONTR, 1-HIC-100, in MANUAL with both Pressurizer Spray valves shut. ____

12. Chemistry has determined that RCS dissolved O_2 is less than 100 ppb **OR** a hydrazine residual exists in the RCS. ____

13. 11A or 11B **AND** 12A or 12B RCPs are available for operation. ____

14. **NOTIFY** M/CEU to prepare to monitor RCP vibration while starting RCPs. **[B0368]** ____

E. **RESTORE** S/G level inputs into DFW **PER** OI-12A FEEDWATER SYSTEM, Section Titled UNBYPASSING DFW CHANNEL (CPU). ____

F. **WHEN** Quench Tank O_2 concentration is less than 4%, **THEN ESTABLISH** VCT H_2 overpressure **PER** OI-2A. **[B0067]** ____

CAUTION
Decay heat levels must be evaluated to ensure heatup rate limits are **NOT** exceeded.

G. **DETERMINE** S/G heat removal method(s) to be used to control RCS heatup, from those available: (listed in order of preferred use) **[B0598]** ____

- MSIVs or MSIV Bypass valves, and Turbine Bypass valves ____
- Main Steam Line drains:
  - DR-5 ORIF BYP.....1-MS-6603-MOV ____
  - DR-6 ORIF BYP.....1-MS-6604-MOV ____
- S/G Blowdown ____
- Atmospheric Dump valves, with ADV CONTR 1-HIC-4056, in MANUAL ____

H. AFTER consulting Chemistry **AND** reviewing system availability, **THEN DETERMINE** S/G feedwater source to be used: (listed in order of preferred use) (check one) ____

☐ Condensate Booster pump ____

☐ Auxiliary Feedwater **PER** OI-32A ____

6.3 SECURE SDC, START RCPs AND ENTER MODE 4 (Continued) **INITIALS**

CAUTION
Failure to properly perform this step may result in severe Waterhammer in the Steam Generator Gooseneck.

I. **PLACE** Blowdown in service with at least 50 GPM flow (a minimum of 25 GPM for each Steam Generator is required) **PER** OI-8A, BLOWDOWN SYSTEM; **[B0719]** ____

- **IF** Blowdown is unavailable **OR** undesirable,
  THEN PERFORM the following;
  (N/A if Blowdown is in service)

  - **IF** possible,
    THEN MAINTAIN the Feedwater Control System in AUTO.

  OR

CAUTION
IF a steam void has formed in the Gooseneck **AND** a rapid increase in feedwater flow is conducted,
THEN severe Steam Generator Gooseneck Waterhammer may result.

- Any adjustment to the Output of the feedwater Bypass Valve controller **OR** the Steam Generator Feed Pump controllers must be conducted very slowly.

  - **IF** the Feedwater Control System must be operated in MANUAL,
    THEN LIMIT the Output of the associated feedwater Bypass Valve controller to less than 20% until a +3 inch S/G level rise is achieved within a 10 minute period.

NOTE
Heatup rate with 2 RCPs operating is approximately 35° F/Hr. This can be used to estimate time to MODE 4.

J. **ENSURE** OP-6, Section 6.1, is working to be completed. Any outstanding items should be evaluated by an SRO to determine if they can be successfully completed prior to MODE 4. ____

6.3 SECURE SDC, START RCPs AND ENTER MODE 4 (Continued) **INITIALS**

CAUTION

- SDC and **ALL** RCPs may be secured for up to one hour during the transition from SDC to forced circulation. (Tech Spec 3.4.6)
- Do **NOT** exceed the following RCS heatup rates:

RCS Temperature	Maximum Heatup Rate
70° F to 246° F	80° F per hour
Greater than 246° F	100° F per hour

- Do **NOT** exceed a Pressurizer linear heatup rate of 100° F per hour.

K. **UTILIZE** Pressurizer Heaters to raise RCS pressure to between 240 and 250 PSIA. ____

1. **RECORD** Pressurizer heatup data in APPENDIX 1, PRESSURIZER HEATUP LOG. ____

L. **IF** the RCS was drained to the top of the hot leg, **THEN ENSURE** RCP CBO flow has been established to the VCT for greater than 30 minutes with RCS pressure greater than or equal to 215 PSIA, to vent the RCP seal cartridges. ____

M. **SECURE** SDC as follows:

1. **ADJUST** SDC TEMP CONTR, 1-HIC-3657, to shut SDC Temperature Control Valve 1-SI-657-CV. ____
2. **ADJUST** SDC FLOW CONTR, 1-FIC-306, in MANUAL to 800 GPM. ____
3. **STOP** running LPSI PPs **AND PLACE** in PULL TO LOCK. ____
4. **SHUT** both SDC HDR RTN ISOL valves:
   - SDC HDR RTN ISOL.....1-SI-651-MOV ____
   - SDC HDR RTN ISOL.....1-SI-652-MOV ____
5. **VERIFY** both SDC Hx Component Cooling outlet valves are SHUT:
   - 11 SDC HX CC OUT.....1-CC-3828-CV ____
   - 12 SDC HX CC OUT.....1-CC-3830-CV ____

6.3.M SECURE SDC, START RCPs AND ENTER MODE 4 (Continued) **INITIALS**

NOTE
The requirement for compensatory actions of NO-1-206 no longer apply for the "SDC PRESS HI" alarm when 1-SI-651-MOV and 1-SI-652-MOV are shut.

6. **MAKE** computer points P103 and P103A, "SDC PRESS HI" alarm INACTIVE **AND ENTER** computer points in the Computer Points Made inactive log. ____

N. **COMMENCE** reading RCS temperature on the CETs with SDC and **ALL** RCPs secured. **[B0064]** ____

- **COMMENCE** recording RCS and Pressurizer heatup data in APPENDIX 1 and APPENDIX 2. ____

CAUTION
- Do **NOT** exceed the following RCS heatup rates:

RCS Temperature	Maximum Heatup Rate
70° F to 246° F	80° F per hour
Greater than 246° F	100° F per hour

- Do **NOT** exceed a Pressurizer linear heatup rate of 100° F per hour.

O. **RAISE** RCS pressure to above the minimum pressure curve of FIGURE 3 but **NOT** to exceed 300 PSIA. (The following table represents the data used to generate FIGURE 3.) ____

RCS TEMPERATURE	RCS PRESSURE
100.00	285.50
150.00	287.60
206.00	294.70
250.00	311.80

1. **EVALUATE** RCS heatup effects on core reactivity and shutdown margin. **[B0270]** ____

2. **UTILIZE** Pressurizer heaters to raise RCS pressure. ____

P. **ENSURE** Pressurizer level between 144 and 170 inches. **[B0064]** ____

Q. **OBTAIN** a set of RCS heatup data for APPENDIX 2, just prior to starting the first set of RCPs. ____

6.3 SECURE SDC, START RCPs AND ENTER MODE 4 (Continued) **INITIALS**

NOTE
Maintaining low RCS pressure will be required to prevent exceeding Maximum Spray Water Temperature Differential, TRM 15.4.2. Operational experience indicates that spray line temperature will **NOT** heat up with the RCS until the 11A/B RCPs are started.

CAUTION
The first RCP may be started in the system with 12 13.8KV Service Bus voltage greater than 14.5KV as long as the second RCP is started within 5 minutes **AND** bus voltage subsequently drops below 14.5KV.

R. **START** one of the following sets of RCPs **PER** OI-1A:

- 11A and 12A RCPs ____

OR

- 11A and 12B RCPs ____

OR

- 11B and 12A RCPs ____

OR

- 11B and 12B RCPs ____

6.3 SECURE SDC, START RCPs AND ENTER MODE 4 (Continued) **INITIALS**

S. **IF** a pair of RCPs can **NOT** be started,
THEN RE-INITIATE SDC as follows:

1. **STOP** the running RCP. ____
2. **LOWER** RCS pressure to between 70 and 250 PSIA. ____
3. **ADJUST** SDC FLOW CONTR, 1-FIC-306, to 95% output signal (1-SI-306-CV 5% open). ____
4. **OPEN** SDC HDR RETURN ISOL valves:
   - SDC HDR RETURN ISOL.....1-SI-651-MOV ____
   - SDC HDR RETURN ISOL.....1-SI-652-MOV ____
5. **OPEN** both SDC Hx Component Cooling outlet valves:
   - 11 SDC HX CC OUT.....1-CC-3828-CV ____
   - 12 SDC HX CC OUT.....1-CC-3830-CV ____
6. **START** a LPSI PP. ____
7. Slowly **ADJUST** 1-FIC-306 to obtain SDC flow of 3000 GPM. ____
8. **ADJUST** the SDC FLOW CONTR, 1-FIC-306, setpoint to 3000 GPM **AND PLACE** in AUTO. ____
9. **ADJUST** SDC TEMP CONTR, 1-HIC-3657, to maintain RCS temperature between 150° F and 195° F. ____
10. **NOTIFY** Plant Chemistry to obtain an RCS activity sample due to the reinitiation of SDC. ____
11. **NOTIFY** Radiation Safety of possible increased radiation levels in the Auxiliary Building. ____
12. **LOG** initiation of SDC in the Transient Tracking Log. ____
13. **IF** needed,
    THEN START the second LPSI PP **PER** OI-3B. ____
14. **WHEN** conditions are established to start two RCPs,
    THEN RE-ENTER this Section at step K. ____

6.3 SECURE SDC, START RCPs AND ENTER MODE 4 (Continued) **INITIALS**

T. **IF** desired to reduce RCS heatup rate,
THEN PERFORM any of the following asterisk steps, as necessary:

NOTE

- 13 AFW pump is the preferred pump.
- It is preferrable to have S/G levels low in the band, approximately -35" actual level, to maximize the amount of AFW which can be added to limit RCS heatup.

* **COMMENCE** feeding the S/Gs with AFW **PER** OI-32A. ____

NOTE

Actual S/G level may be determined by comparing remote indicated level to FIGURE 5, NARROW RANGE S/G LEVEL INDICATED vs ACTUAL.

1. **ENSURE** that both S/G levels are maintained between (-)40 and (+)60 inches actual level. ____

* **IF** SHUT,
THEN OPEN both MSIVs:

- 11 MSIV.....1-MS-4043-CV ____
- 12 MSIV.....1-MS-4048-CV ____

CAUTION

The requirements of Tech Spec 3.4.7 shall be adhered to if it becomes necessary to secure RCPs.

* **SECURE** the running RCPs **AND PERFORM** one of the following: ____

1. **IF** desired to restart the RCPs,
THEN RETURN to Step R. ____
2. **IF** desired to reinitiate SDC,
THEN RETURN to Step S. ____

6.3 SECURE SDC, START RCPs AND ENTER MODE 4 (Continued) **INITIALS**

> **NOTE**
> Steps that prepare the starting of a RCP may be performed **PER** OI-1A concurrently while stopping a RCP to ensure the RCP is started within 5 minutes of securing a RCP.

U. **IF** desired to shift a RCP in a loop,
THEN PERFORM the following:

1. **ENSURE** RCS pressure and temperature are within the limitations of FIGURE 3. ____

2. **STOP** ONE of the running RCPs **PER** OI-1A. ____

3. **START** the RCP which was initially secured in the same loop **PER** OI-1A. ____

V. **WHEN** two (2) RCPs are running satisfactorily,
THEN PERFORM the following while continuing with this procedure:

- **PLACE** the MPT ENABLE HS, HS-1406 and HS-1408, in the VARIABLE MPT ENABLE position. ____

  - **VERIFY** SPDS screen, RCS PRESSURE & INVENTORY, page 3, RCS Pressure/Temperature Curve, shifts to the VARIABLE SETPOINT LTOP curve. ____

- **COMMENCE** reading RCS temperature using Cold Leg indication for the loops with RCPs running **[B0064]** ____

- **SECURE** the SDC alignment **PER** OI-3B, Section SECURING SDC. ____

- **NOTIFY** Plant Chemistry to sample RCS to ensure adequate boron concentration due to RCS mixing. **[B0270][B0271][B0605]** ____

6.3 SECURE SDC, START RCPs AND ENTER MODE 4 (Continued) **INITIALS**

> **CAUTION**
> Do **NOT** exceed the MAX OPERATING PRESSURE CURVE limits.

W. **RAISE** RCS pressure consistent with the P/T limits of FIGURE 3, while concurrently performing the following:

1. **WHEN** RCS pressure reaches 300 PSIA, **THEN**:

   a. **CHECK** the SIT Outlet MOVs open. ____

   b. **PLACE** the SIT OUT keyswitches in OPEN:

   - 11A 1-SI-614-MOV.....1-HS-3614 ____
   - 11B 1-SI-624-MOV.....1-HS-3624 ____
   - 12A 1-SI-634-MOV.....1-HS-3634 ____
   - 12B 1-SI-644-MOV.....1-HS-3644 ____

   c. **LOCK** the SIT Outlet MOV breakers in the OFF position:

   - 11A 1-SI-614-MOV.....52-11442 ____
   - 11B 1-SI-624-MOV.....52-11443 ____
   - 12A 1-SI-634-MOV.....52-10442 ____
   - 12B 1-SI-644-MOV.....52-10443 ____

> **CAUTION**
> - Do **NOT** exceed the following RCS heatup rates:
>
> | RCS Temperature | Maximum Heatup Rate |
> |---|---|
> | 70° F to 246° F | 80° F per hour |
> | Greater than 246° F | 100° F per hour |
>
> - Do **NOT** exceed a Pressurizer linear heatup rate of 100° F per hour.

X. **ESTABLISH** an RCS heatup, consistent with the P/T limits of FIGURE 3. ____

- **RECORD** heatup data in APPENDIX 1 and APPENDIX 2. ____ 05900

6.3 SECURE SDC, START RCPs AND ENTER MODE 4 (Continued) **INITIALS**

NOTE
Actual S/G level may be determined by comparing remote indicated level to FIGURE 5.

CAUTION
Severe waterhammer may result if RCS temperature is greater than 200° F, and Main Feedwater flow is restored after it has been stopped for greater than 80 minutes. To prevent water hammer in the Main Feed Ring (MFR), Main Feedwater Gooseneck Purge shall be performed to restore Main Feedwater flow.

Y. **MAINTAIN** S/G level between (-)40 and (+)60 inches actual level as follows:

1. **IF** Condensate was selected as the S/G feedwater source, **THEN RAISE** level as follows: ____

   a. **START** a COND BSTR PP **PER** OI-11A. ____

   b. **PLACE** the Feedwater Regulating System in AUTO **PER** OI-12A, section titled, FEEDWATER REGULATING SYSTEM STARTUP. ____

2. **IF** AFW was selected as the S/G feedwater source, **THEN INITIATE** AFW **PER** OI-32A, if not already running. ____

3. **LOG** initiation of feedwater in the Transient Tracking Log. ____

4. **LOWER** level as necessary, for the duration of this procedure, using one or a combination of the following methods:

   - Lowering the feed rate ____
   - Temporarily isolating the feedwater source and steaming the S/G ____
   - Initiating **OR** raising Blowdown flow **PER** OI-8A ____

Z. **ENSURE** the MODE 4 checklist is completed satisfactorily prior to exceeding 200° F. ____

6.3 SECURE SDC, START RCPs AND ENTER MODE 4 (Continued) **INITIALS**

> **CAUTION**
> Do **NOT** exceed the MAX OPERATING PRESSURE CURVE.

AA. **CONTINUE** HEATUP of the RCS to 200° F (as read on TI-112C **OR** TI-122C as applicable) and enter Mode 4: **[B0599]** ____

- **RECORD** date/time of Mode 4 entry:_____/_____ ____
- **LOG** Mode 4 entry in the CRO Log. ____

AB. Prior to exceeding Tave of 250° F (as read on TI-112C **OR** TI-122C as applicable), **VERIFY** Plant Chemistry has determined the RCS dissolve O_2 is less than 100 ppb. (TRM 15.4.1) **[B0599]** ____

> **CAUTION**
> Do **NOT** raise RCS temperature to or greater than 300° F unless specifically directed to do so by this procedure.

AC. **CONTINUE** HEATUP of the RCS to a maximum of 290° F. ____

AD. **ENSURE** the following SIT parameters are in the specified range:

- Boron concentration between 2450 and 2700 ppm ____
- Level between 187 and 199 inches ____
- Pressure between 200 and 225 PSIG ____

****** END ******

6.4 PREPARE SYSTEMS FOR MODE 3

A. Requisite section completed: 6.3, SECURE SDC, START RCPs AND ENTER MODE 4. ____

NOTE
Major steps (B, C, D...) in this section may be performed concurrently or in any order.

B. **INITIATE** completion of OP-6, Section 6.3. ____

C. **ENSURE** PAMS is in service and operable **PER** OI-1I. ____

D. **IF** required for S/G Chemistry control **AND NOT** in service, **THEN PLACE** S/G Blowdown in service **PER** OI-8A. ____

E. **IF** AFW is being used to maintain S/G levels **AND** the Condensate system and Feedwater header are available, **THEN PERFORM** the following:

1. **OPEN** 11 SG FW ISOL, 1-FW-4516-MOV. ____
2. **OPEN** 12 SG FW ISOL, 1-FW-4517-MOV. ____
3. **START** a COND BSTR PP **PER** OI-11A. ____
4. **PLACE** the Feedwater Regulating System in AUTO **PER** OI-12A, section titled, FEEDWATER REGULATING SYSTEM STARTUP. ____
5. **LOG** the initiation of Main Feedwater flow in the Transient Tracking Log. ____
6. **SECURE** AFW **PER** OI-32A. ____

F. **IF** 11 or 12 AFW PP is feeding the S/Gs **THEN ENSURE** 13 AFW PP is aligned for auto actuation:

- 13 AFW PP is shutdown **AND** handswitch, 1-HS-4540 in AUTO ____
- SG AFW BLOCK valves open in AUTO ____
- **ALL** Motor Driven Train Flow Indicating Controllers are set at 150 GPM. ____

6.4 PREPARE SYSTEMS FOR MODE 3 (Continued)

G. **IF** 13 AFW PP is feeding the S/Gs
THEN ENSURE 11 or 12 AFW PP is aligned for auto actuation:

- 11 SG AFW STM SUPP & BYP, 1-MS-4070-CV, is SHUT **AND** 1-HS-4070 in AUTO ____
- 12 SG AFW STM SUPP & BYP, 1-MS-4071-CV, is SHUT **AND** 1-HS-4071 in AUTO ____
- SG AFW BLOCK valves open in AUTO ____
- **ALL** Steam Train Flow Indicating Controllers are set at 150 GPM. ____
- **ALL** AFW PP Speed Controllers set at 5% ____

H. **WHEN** or **IF** the AFW system is secured,
THEN ENSURE the AFW System is aligned ready for automatic operation with:

- 11 SG AFW STM SUPP & BYP, 1-MS-4070-CV, is SHUT **AND** 1-HS-4070 in AUTO ____
- 12 SG AFW STM SUPP & BYP, 1-MS-4071-CV, is SHUT **AND** 1-HS-4071 in AUTO ____
- 13 AFW PP is shutdown **AND** handswitch, 1-HS-4540 in AUTO ____
- SG AFW BLOCK valves open in AUTO ____
- **ALL** Flow Indicating Controllers are set at 150 GPM. ____
- **ALL** AFW PP Speed Controllers set at 5% ____

I. **REQUEST** Chemistry to sample the WGST for O_2 concentration. ____

NOTE
Switches are located inside the 2nd cabinet door from the top of each cabinet section/stack, 3 thru 17.

J. **IF** starting up from an extended outage,
THEN Secure the CEDM Coil Power Programmer cabinet heaters and start the cabinet fans:

1. Place the Cabinet heater switch to OFF. ____
2. Place the Cabinet fan switch to ON. ____
3. Repeat until all Cabinets are complete, Cabinets 3-17. ____

6.4 PREPARE SYSTEMS FOR MODE 3 (Continued)

K. **IF** a vacuum exists in the Condenser,
THEN ENSURE SHUT the CAR Condenser Shell Stop to any condenser half shell that does **NOT** have a Circulating Water Pump running.

- 11A COND SHELL STOP, 1-CAR-101 ____
- 11B COND SHELL STOP, 1-CAR-102 ____
- 12A COND SHELL STOP, 1-CAR-103 ____
- 12B COND SHELL STOP, 1-CAR-104 ____
- 13A COND SHELL STOP, 1-CAR-105 ____
- 13B COND SHELL STOP, 1-CAR-106 ____

****** END ******

6.5 ENTER MODE 3 AND HEATUP TO 375° F

A. Requisite section completed: 6.4, PREPARE SYSTEMS FOR MODE 3. ____

NOTE
This section requires operator actions inside Containment to check open the SIT Outlet MOVs.

B. **ENSURE** the following:

- OP-6, Section 6.3 complete. ____
- RCS and S/G chemistry parameters are within specification. ____
- CEDM Cooling fans available. ____
- Cavity Cooling System available. ____
- SIT Outlet MOVs checked open within 12 hours prior to Mode 3 entry **PER** FIGURE 6 **AND** documented in the CRO Log. **[B0164]** ____
- **RECORD** date/time SIT Outlet MOVs checked:_____/_____

CAUTION

- RCS dissolved O_2 concentration shall be less than 100 ppb when RCS temperature is greater than 250° F.
- Do **NOT** exceed the following RCS heatup rates:

RCS Temperature	Maximum Heatup Rate
70° F to 246° F	80° F per hour
Greater than 246° F	100° F per hour

- Do **NOT** exceed a Pressurizer linear heatup rate of 100° F per hour.

C. **ESTABLISH** an RCS heatup, consistent with the P/T limits of FIGURE 3. ____

- **RECORD** heatup data in APPENDIX 1 and APPENDIX 2. ____

D. **WHEN** RCS temperature reaches 300° F (as read on TI-112C **OR** TI-122C as applicable),
THEN:

- **RECORD** date/time of Mode 3:_____/_____
- **LOG** mode 3 entry in the CRO Log. ____
- **START** the CEDM Cooling Fans **PER** OI-5C. ____
- **PLACE** the Cavity Cooling System in service **PER** OI-5A. ____

6.5 ENTER MODE 3 AND HEATUP TO 375° F (Continued)

NOTE
PORV leakage and the results of attempts to reseat shall be documented via a Condition Report **PER** QL-2-100.

E. **IF** at any time PORV leakage is indicated,
THEN PERFORM the following:
(N/A if NO PORV leakage is indicated)

1. **NOTIFY** the System Engineer. ____

2. **IDENTIFY** the leaking valve. ____

3. With Shift Managers concurrence, **ATTEMPT** to **RESEAT** the PORV. **[B0894]** ____

   a. **ENSURE** RCS pressure is between 500 and 600 PSIA. ____

   b. **ENSURE** RCS Temperature is less than 360° F. ____

   c. **ENSURE EITHER** 4 RCPs operating **OR** 2 RCPs operating in the same loop. ____

   d. **VERIFY** the associated PORV BLOCK valve is available to isolate the leaking PORV: ____

      - 1-RC-403-MOV
      - 1-RC-405-MOV

   e. **VERIFY** Quench Tank parameters are normal:

      - Quench Tank temperature is less than 120° F. ____
      - Quench Tank pressure is approximately 3 PSIG. ____
      - Quench Tank level is approximately 28.5 inches. ____

   f. **VERIFY** the Pressurizer Spray Valves are shut:

      - 1-RC-100E-CV ____
      - 1-RC-100F-CV ____
      - 1-CVC-517-CV ____

6.5.E.3 ENTER MODE 3 AND HEATUP TO 375° F (Continued)

CAUTION

- Due to the long stroke time on the PORV BLOCK valve, the operator shall be prepared to shut the PORV BLOCK valve if the PORV fails to shut **PER** step E.3.k.
- To prevent challenging the Quench Tank rupture disk, steps E.3.g through E.3.i should be performed in less than 3 seconds.

g. **PLACE** the associated PORV OVERRIDE handswitch in MANUAL OPEN: ____

- 1-HS-1402
- 1-HS-1404

h. **VERIFY** the PORV opens. ____

i. **RETURN** the PORV OVERRIDE handswitch to AUTO: ____

- 1-HS-1402
- 1-HS-1404

j. **VERIFY** the PORV shuts. ____

k. **IF** the PORV fails to shut,
THEN SHUT the associated PORV BLOCK valve: ____

- 1-RC-403-MOV
- 1-RC-405-MOV

l. **DETERMINE** if PORV leakage has stopped. ____

4. **IF** PORV leakage still exists,
THEN DETERMINE course of action by considering the following:
(N/A if PORV leakage has stopped) ____

- **REPEAT** step E.3.
- **COOLDOWN** for repairs.
- **WHEN** RCS temperature is greater than 365° F,
THEN SHUT the associated PORV BLOCK valve:
  - 1-RC-403-MOV
  - 1-RC-405-MOV

5. **NOTIFY** the electric shop to check the thermal overloads are **NOT** tripped on the PORV that was cycled. **[B0034]** ____ 05900

6.5 ENTER MODE 3 AND HEATUP TO 375° F (Continued)

CAUTION
Do **NOT** heatup the RCS to greater than 385° F without at least one HPSI train aligned for automatic operation.

F. **WHEN** RCS temperature is greater than 365° F (as read on TI-112C **OR** TI-122C as applicable),
THEN PERFORM the following: **[B0064]**

1. **RETURN** both PORVs to normal by placing their handswitches in NORMAL:
   - 1-RC-402-ERV.....1-HS-1406 ____
   - 1-RC-404-ERV.....1-HS-1408 ____
2. **ENSURE** the PORV Override Shut/Auto handswitches are in AUTO:
   - 1-RC-402-ERV.....1-HS-1402 ____
   - 1-RC-404-ERV.....1-HS-1404 ____
3. **CLEAR** the HPSI LTOP tagout **AND ALIGN** HPSI system to the following configuration:

   a. HPSI pump discharge valves locked open:
   - 11 HPSI PP DISCH ISOL...1-SI-428 ____
   - 12 HPSI PP DISCH ISOL...1-SI-415 ____
   - 13 HPSI PP DISCH ISOL...1-SI-406 ____

NOTE
Breaker Op Checks will be performed when RCS pressure is 1600 PSIA.

   b. HPSI pump breakers RACKED IN **PER** OI-27D:
   - 11 HPSI pump.....152-1108 ____
   - 12 HPSI pump.....152-1408 ____
   - 13 HPSI pump.....152-1110 ____
   - 13 HPSI pump.....152-1410 ____

   c. 11 HPSI PP in AUTO. ____

   d. 13 HPSI PP in AUTO. ____

6.5.F.3 ENTER MODE 3 AND HEATUP TO 375° F (Continued)

e. 12 HPSI PP in PULL TO LOCK. ____

f. HPSI MAIN HEADER ISOL, 1-SI-654-MOV open. ____

g. HPSI AUX HEADER ISOL, 1-SI-656-MOV open. ____

h. HPSI HDR valves in AUTO:

MAIN HPSI HDR	AUX HPSI HDR
1-SI-616-MOV	1-SI-617-MOV
1-SI-626-MOV	1-SI-627-MOV
1-SI-636-MOV	1-SI-637-MOV
1-SI-646-MOV	1-SI-647-MOV

____

i. SI TO CHG HDR, 1-CVC-269-MOV, shut. ____

G. **WHEN** RCS temperature is greater than 365° F (as read on TI-112C **OR** TI-122C as applicable)
THEN START the remaining RCP(s) **PER** OI-1A. ____

- **COMMENCE** reading RCS temperature using 11 **OR** 12 RCS Cold Leg indication (TI-112C **OR** TI-122C).

****** END ******

6.6 CONTINUE RCS HEATUP TO 2250 PSIA AND 532° F **INITIALS**

A. Requisite section completed: 6.5, ENTER MODE 3 AND HEATUP TO 375° F. ____

B. **IF** exiting a refueling outage,
THEN CONTACT the CVCS System Manager, **AND DETERMINE** which Letdown Control Valves should be in service for the operating cycle.
(Check-mark recommended CV's) ____ 05900

- ☐ L/D CV, 1-CVC-110P
- ☐ L/D CV, 1-CVC-110Q
- ☐ L/D BACK PRESS REG, 1-CVC-201P
- ☐ L/D BACK PRESS REG, 1-CVC-201Q

NOTE
This section requires operator actions inside Containment to throttle the Pressurizer Spray Valve bypass valves.

CAUTION
Do **NOT** exceed an RCS heatup rate of 100° F per hour **OR** a Pressurizer linear heatup rate of 100° F per hour.

C. **ESTABLISH** an RCS heatup rate of less than 100° F per hour utilizing the pre-determined S/G heat removal method(s) **AND** consistent with the P/T limits of FIGURE 4, RCS P/T LIMITS - 4 RCPs RUNNING. **[B0598]** ____

1. **IF** necessary to raise the heatup rate,
THEN SHUT the MSIVs. ____

2. **RECORD** heatup data in APPENDIX 1 and APPENDIX 2. ____

D. **IF** the feedwater source is the Condensate system **AND** Condenser vacuum is established,
THEN when deemed appropriate by the CRS, **PERFORM** the following while continuing with this section:

1. **START** additional COND PPs to support feedwater flow rates. ____

2. **PLACE** a Steam Generator Feed Pump in service **PER** OI-12A. ____

6.6 CONTINUE RCS HEATUP TO 2250 PSIA AND 532° F (Continued) **INITIALS**

> **CAUTION**
> Minimize RCP operation with RCS pressures between 1000 and 1300 PSIA. Excessive RCP seal wear can occur during prolonged operation in this region due to the RCP shaft moving axially between the upper and lower thrust bearings.

E. **WHEN** RCS pressure reaches 1000 PSIA,
THEN PERFORM the following:

1. **ENSURE ONE** Letdown Control Valve **AND ONE** Letdown Backpressure Control Valve isolated as follows:

   a. **PLACE** L/D CONTR VLVS Selector Switch, 1-HS-110-1, in 110P **OR** 110Q. ____

   b. **SHUT** the L/D CV INLET valve for the CV out of service:

   - (1-CVC-110P-CV) L/D CV INLET.....1-CVC-105 ____
   - (1-CVC-110Q-CV) L/D CV INLET.....1-CVC-103 ____

   c. **PLACE** BACKPRESSURE REG VLVS selector switch, 1-HS-201, in 201P **OR** 201Q. ____

   d. **SHUT** the BP REG INLET valve for the CV out of service:

   - (1-CVC-201P-CV) BP REG INLET.....1-CVC-108 ____
   - (1-CVC-201Q-CV) BP REG INLET.....1-CVC-110 ____

2. Slowly **ADJUST** L/D PRESS controller, 1-PIC-201, setpoint to 460 PSIG in AUTO. ____ 05900

> **NOTE**
> Due to the tolerances on the SG Low Pressure Bypass circuitry and SG Low Pressure Trip reset setpoints, a valid trip may be generated if the TCBs are closed between 700 and 770 PSIA S/G pressure.

F. **VERIFY** Reactor Trip Circuit Breakers 1 through 8 are open prior to S/G pressure reaching 700 PSIA. **[B0887]** ____

G. **WHEN** S/G pressure is between 703 and 767 PSIA as read on PI-1013A through D,
THEN ENSURE ALL SGIS Sensor Modules are reset. ____ 05900

6.6 CONTINUE RCS HEATUP TO 2250 PSIA AND 532° F (Continued) **INITIALS**

H. **WHEN** S/G pressure reaches 785 PSIA (RCS temperature of 516° F), **THEN** perform the following:

1. **CHECK** the following automatic actions occur: (Tech Spec 3.3.4, Table 3.3.4-1, Note (d))

   - 1C03 "SGIS A BLOCK PERMITTED" **AND** "SGIS B BLOCK PERMITTED" annunciators clear. ____
   - 1C03 "SGIS A BLOCKED" **AND** "SGIS B BLOCKED" annunciators clear. ____
   - RPS Low Steam Generator Pressure Trip Circuit Bypass resets. ____

2. **ENSURE** the RPS Low Steam Generator Pressure Trip Circuit Bypass keys are removed. ____

NOTE

- When RCS pressure is less than 1550 PSIA, pressure shall be read using the higher of PI-103 or PI-103-1 **OR** read PI-105A.
- When RCS pressure is greater than 1550 PSIA, pressure shall be read using PIC-100X **OR** PIC-100Y **OR** PI-105A.

I. **WHEN** RCS pressure reaches 1600 PSIA, **THEN PERFORM** the following:

1. **ENSURE** PZR PRESS CONTR 1-PIC-100X and 1-PIC-100Y are in AUTO with a setpoint of 1900 PSIA. ____
2. **ENSURE** the desired number of Pressurizer Heaters are in the AUTO and ON positions. ____
3. **SHIFT** PZR SPRAY VLV CONTR, 1-HIC-100, to AUTO. ____
4. **PERFORM** beaker op checks for HPSI pump breakers racked in per Section 6.5 Step G.3. ____
5. **ENSURE** all available Charging Pumps are prepared for operation with the RCS pressure greater than 1600 PSIA, **PER** OI-2A, section PRESSURIZING CHARGING PUMP SUCTION STABILIZERS AND DISCHARGE DESURGERS. ____ 05900

6.6 CONTINUE RCS HEATUP TO 2250 PSIA AND 532° F (Continued) **INITIALS**

J. **WITHIN** 12 hours prior to raising RCS pressure to 1750 PSIA, **ENSURE** the following:

- SDC Flow Control valve, 1-SI-306-CV, locally verified to be open **PER** FIGURE 7 **AND** documented in the CRO Log. **[B0164]** ____
- **RECORD** date/time 1-SI-306-CV checked:_____/_____ ____
- Two LPSI pumps are operable ____
- Each ECCS subsystem has an operable flow path from the RWT which will transfer suction to the Containment Emergency Sump on RAS ____
- Both Containment Spray pumps are operable ____
- Each Containment Spray subsystem is capable of taking a suction from the RWT on CSAS and SIAS ____
- Each Containment Spray subsystem is capable of automatically transferring suction to the Containment Emergency Sump on RAS. ____

K. **WHEN** RCS pressure is between 1740 and 1775 PSIA as read on PI-102A through D,
THEN ENSURE ALL SIAS Pressurizer Pressure (PP) Sensor Modules are reset. ____

L. **WHEN** RCS pressure is between 1785 and 1800 PSIA as read on PI-102A through D,
THEN CHECK the following automatic actions occur: (Tech Spec 3.3.4, Table 3.3.4-1, Note (a))

- 1C08 "PZR PRESS BLOCK A PERMITTED" **AND** "PZR PRESS BLOCK B PERMITTED" annunciators clear. ____
- 1C08 "PZR PRESS BLOCK A" **AND** "PZR PRESS BLOCK B" annunciators clear. ____

6.6 CONTINUE RCS HEATUP TO 2250 PSIA AND 532° F (Continued) **INITIALS**

M. **WHEN** RCS pressure reaches approximately 1900 PSIA,
THEN: **[B0340]**

> **NOTE**
> Soak pressure is a value significantly below Pressurizer Safety Valve lift setpoint yet close to Presurizer normal operating temperature.

1. **SOAK** at 1900 PSIA or another pressure as determined by System Engineering for at least three hours. ____

2. **AFTER** soaking the PZR for at least three hours,
THEN:

   a. **ADJUST** the PZR PRESS CONTR 1-PIC-100X and 1-PIC-100Y setpoint to 2250 PSIA. ____

   b. **ADJUST** the number of PZR heaters that are either in the ON or AUTO position to **RAISE** RCS pressure to 2250 PSIA over a two hour period. ____

> **CAUTION**
> Rapid adjustment of Pressurizer Level Controllers will cause L/D flow to rise excessively.

N. **WHEN** RCS pressure reaches 2250 PSIA,
THEN SHIFT both pressurizer level controllers, 1-LIC-110X **AND** 1-LIC-110Y to Auto-Remote-Setpoint operation by performing the following.

- **WHEN** pressurizer level reaches 160 inches,
THEN:

  1. **STABILIZE** pressurizer level at approximately 160 inches. ____

  2. **PLACE** 1-LIC-110X in MANUAL. ____

  3. **SHIFT** 1-LIC-110X to REMOTE-SETPOINT. ____

  4. **VERIFY** the REMOTE-SETPOINT is 160 inches. ____

  5. **SHIFT** 1-LIC-110X to AUTO. ____

  6. **VERIFY** 1-LIC-110X is in Auto-Remote as indicated by an "AR" in the lower right side of the controller. ____

  7. **PLACE** 1-LIC-110Y in MANUAL. ____

  8. **SHIFT** 1-LIC-110Y to REMOTE-SETPOINT. ____

6.6.N CONTINUE RCS HEATUP TO 2250 PSIA AND 532° F (Continued) **INITIALS**

9. **VERIFY** the REMOTE-SETPOINT is 160 inches. ____

10. **SHIFT** 1-LIC-110Y to AUTO. ____

11. **VERIFY** 1-LIC-110Y is in Auto-Remote as indicated by an "AR" in the lower right side of the controller. ____

O. **MAINTAIN** RCS temperature between 530° F and 534° F utilizing any of the following options:

- Main Steam Line drains:
  - 1-DR-5 FO BYP.....1-MS-6603-MOV ____
  - 1-DR-6 FO BYP.....1-MS-6604-MOV ____
- Atmospheric Dump valves, with ADV CONTR 1-HIC-4056, in MANUAL ____
- Turbine Bypass Valves with the MSIVs open ____

1. **IF** the MSIVs are shut,
   THEN PERFORM the following:

   a. **CLOSE** the power supply breakers to the MSIV Bypass valves:
      - MAIN STEAM VALVE 11 BYPASS 1-MOV-4045, 52-11428 ____
      - MAIN STEAM VALVE 12 BYPASS 1-MOV-4052, 52-10428 ____

   b. **OPEN** the MSIV bypass valves to start warming the Main Steam headers:
      - 11 MSIV BYP, 1-MS-4045-MOV ____
      - 12 MSIV BYP, 1-MS-4052-MOV ____

   c. **CYCLE** MS UPSTREAM DRN VLVS, 1-HS-6622, as necessary to prevent excessive blowdown of the Main Steam header. ____

   d. **CHECK** Main Steam header pressure stabilized within 100 PSID of Steam Generator pressure.
      - **IF** necessary to lower the ΔP across the MSIVs, **THEN SHUT** selected High Pressure Drains until the ΔP is within 100 PSID. ____

   e. **OPEN** 11 and 12 MSIVs:
      - 11 MSIV, 1-MS-4043-CV ____
      - 12 MSIV, 1-MS-4048-CV ____

6.6.O.3 CONTINUE RCS HEATUP TO 2250 PSIA AND 532° F (Continued) **INITIALS**

f. **SHUT** 11 and 12 MSIV Bypass valves:

- 11 MSIV BYP, 1-MS-4045-MOV ____
- 12 MSIV BYP, 1-MS-4052-MOV ____

g. **OPEN** the power supply breakers to the MSIV Bypass valves: **[B0350]**

- MAIN STEAM VALVE 11 BYPASS 1-MOV-4045, 52-11428 ____
- MAIN STEAM VALVE 12 BYPASS 1-MOV-4052, 52-10428 ____

P. **IF** the MSIVs are open,
THEN ENSURE the High Pressure Steam Drains are aligned to the NORMAL OPERATING position **PER** OI-8C, MAIN STEAM AND MSR VENTS AND DRAINS. ____

Q. **LOG** termination of Pressurizer/RCS heatup in the Transient Tracking Log. ____

R. **ENSURE** Pressurizer Spray Valve Bypass Valves are throttled open **PER** OI-1H. ____

1. **RECORD** turns open:

- 1-RC-100E-CV BYP THR, 1-RC-219 _____ ____
- 1-RC-100F-CV BYP THR, 1-RC-220 _____ ____

S. **IF** starting up from Mode 5 where a Pressurizer bubble was maintained,
THEN INITIATE Pressurizer Spray to equalize Pressurizer and RCS boron concentration as follows:

1. **ENERGIZE ALL** Pressurizer Backup Heater Banks. ____

2. **ADJUST** the setpoint of the selected PZR PRESS CONTR 1-PIC-100X or 1-PIC-100Y, to maintain Pressurizer pressure at 2250 PSIA. ____

T. **PERFORM** a channel check of the S/G Wide Range Level indicators **PER** STP O-63-1. **[B0062]** ____

U. **NOTIFY** Chemistry to sample Safety Injection Tanks for Boron Concentration. ____

****** END ******

7.0 POST PERFORMANCE ACTIVITIES

A. Upon completion of this procedure, perform the following:

- Forward the original to the Operations Senior Administrative Assistant for retention **PER** CNG-PR-3.01-1000
- Attach copies of the RCS and Pressurizer Heatup Logs to the Transient Tracking Log (Ref. EN-1-115)

8.0 BASES

[B0015] Delineates criteria for determining S/G availability.

[B0034] POSRC, LER 90-11; to have the Electric Shop check the PORVs overloads if the PORVs lift.

[B0062] Establishes requirement to perform a channel check of S/G wide range level indicators when S/G level is on scale.

[B0064] LTOP requirements.

[B0066] Safety analysis that allows SDC Suction Isolation valve pressure interlocks to be defeated.

[B0067] Establishes requirement that the Quench Tank shall be below 4% O_2 prior to adding H_2 to the RCS.

[B0116] Establishes requirements for RCS heat removal capabilities during partial drain down conditions.

[B0138] NUMARC 91-06 "GUIDELINES FOR INDUSTRY ACTIONS TO ASSESS SHUTDOWN MANAGEMENT":

- Requires that criticality be anticipated whenever dilution, heatup or CEA withdrawals are occurring, based on industry events
- Requires that controls be established to preclude loss of RCS inventory

[B0164] Establishes requirement to check local position of SIT Outlet MOVs and SI-306-CV against a diagram, per SER Supplement 5, dated 8-10-76.

[B0203] To ensure the quantity of sodium tetraborate is sufficient to neutralize the cntmt sump water following a LOCI, the max RCS **[B]** shall be less than 2700 PPM prior to raising RCS temperature greater than 200° F.

[B0221] Allow diluting the RCS with S/D CEAs inserted as long as no RCS heatup is in progress.

[B0270] Operator Reactivity Management Procedure Review Guidelines. Letter from B. Shick to M. Navin 9-22-95

8.0 BASES (Continued)

[B0271] This is in response to SOER 94-02, recommendation 4.a: Identify procedure activities that can result in low concentrated borated water being transported to the RCS.

[B0272] SOER 94-02, The requirement to keep an RCP running and PZR spray in operation while doing any RCS boration or dilution is to assure adequate RCS mixing to prevent diluted pockets. However, plant conditions are such that it is not always possible to assure that RCPs are running. In these cases it is possible to minimize the probability of diluted pockets during Natural Circulation cooldown or during SDC operation.

[B0340] Primary System Engineering recommends the following actions to prevent seat distortion of the primary RVs. Soak RCS at 1900 PSIA for at least three hours then raise RCS pressure to 2250 PSIA over a two hour period.

[B0350] Appendix R requirements to maintain breakers open to prevent maloperation.

[B0368] RCAR 96-10, recommended PTU augment the vibration monitoring for all normal RCP starts. (e.i. starting RCPs for heatup, sweeping S/Gs...)

[B0410] NEU (NEU 01-026) provided the maximum allowable temperature that the S/G can be colder than the RCS to prevent exceeding the max allowable cooldown rate.

[B0598] SOER 94-01, recommendation 2.b. Provide guidance for controlling reactor coolant system temperature when below no-load conditions.

[B0599] IR3-000-611 states TIA-115 and TIA-125 have instrument uncertainties greater than those accommodated for by the LTOP analysis. Therefore TI-112C and TI-122C, with instrument uncertainties acceptable by the LTOP analysis, SHALL be used for LTOP controls.

[B0605] Memo from the boronometer removal task force that describes increased RCS boron sampling requirements due to the removal of the boronometer.

[B0719] Memo/Minutes from a meeting between Bonner, Bleacher and McCord, dated 10/15/02, discussing resolution guidelines to prevent Waterhammer of the Steam Generator Gooseneck. Memo G\PES\1102\1113-600 Dated Nov 13, 02 lists conditions for a steam void during plant startup.

[B0887] LER 03-002 resolution document. Ensure TCBs are open between 700 and 770 PSIA S/G pressure due to setpoint tolerances in Low S/G Pressure Bypass reset and S/G Low Pressure trip reset.

[B0894] ES200000837, Evaluate stroke testing PORVs.

8.0 BASES (Continued)

[B2547] RCS P/T and RCP Operation Curves.

9.0 RECORDS

Records generated by this procedure shall be transferred to Records Management **PER** CNG-PR-3.01-1000, Records Management.

RCS P/T LIMITS - 11A AND 11B RCPs RUNNING [B2547]

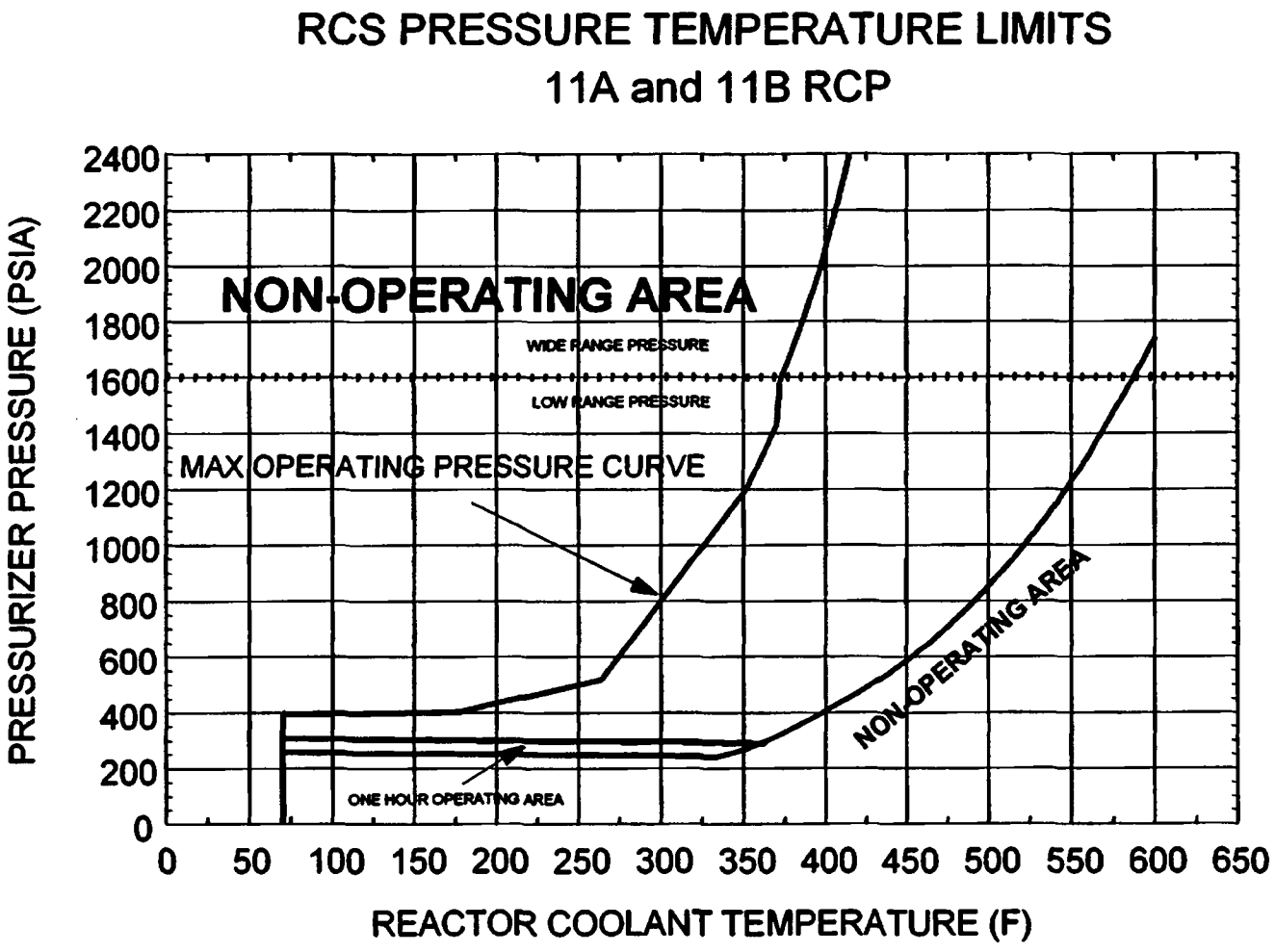

RCS P/T LIMITS - 12A AND 12B RCPs RUNNING [B2547]

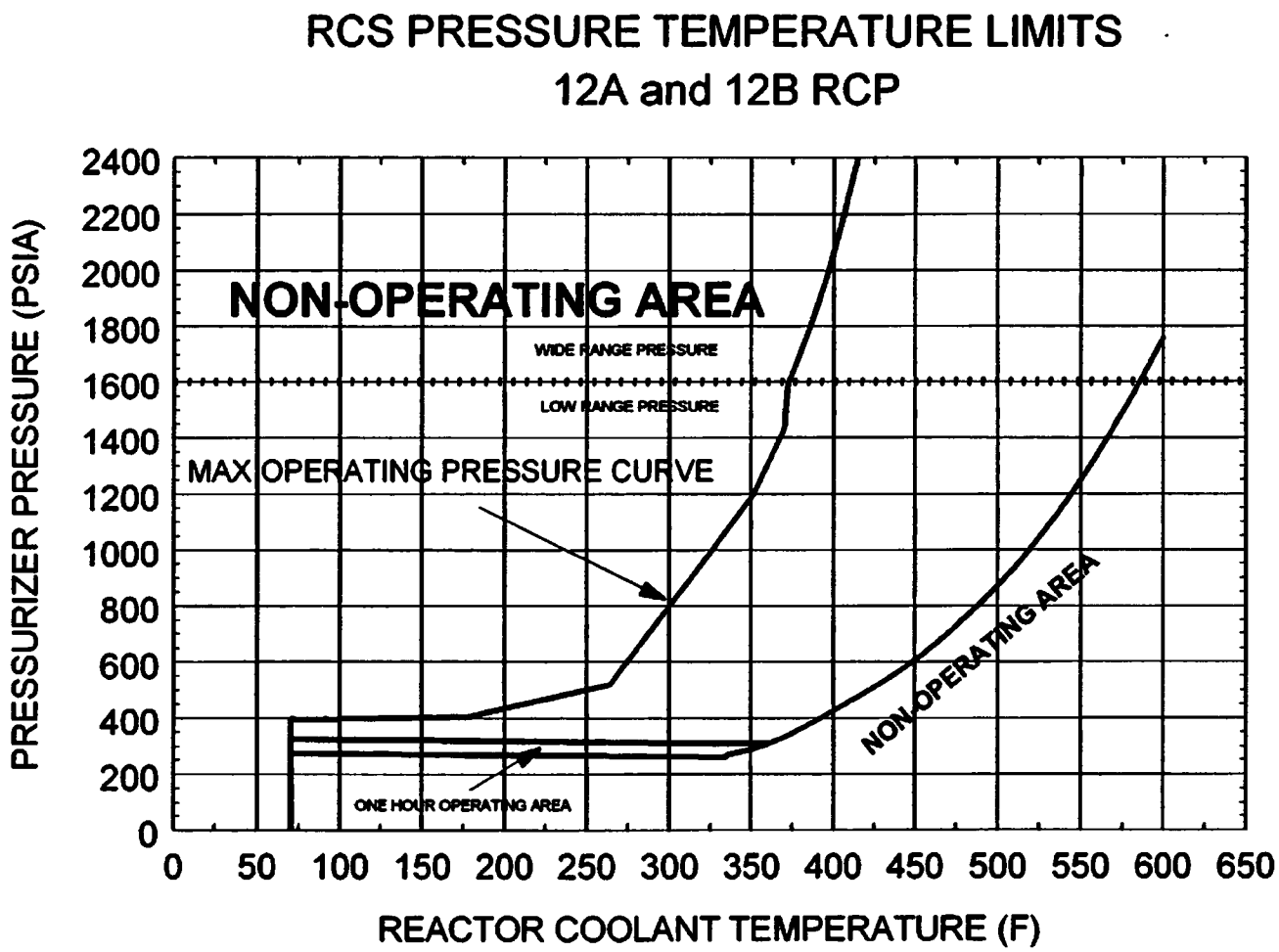

RCS P/T LIMITS - 11A or 11B AND 12A or 12B RCPs RUNNING
[B2547]

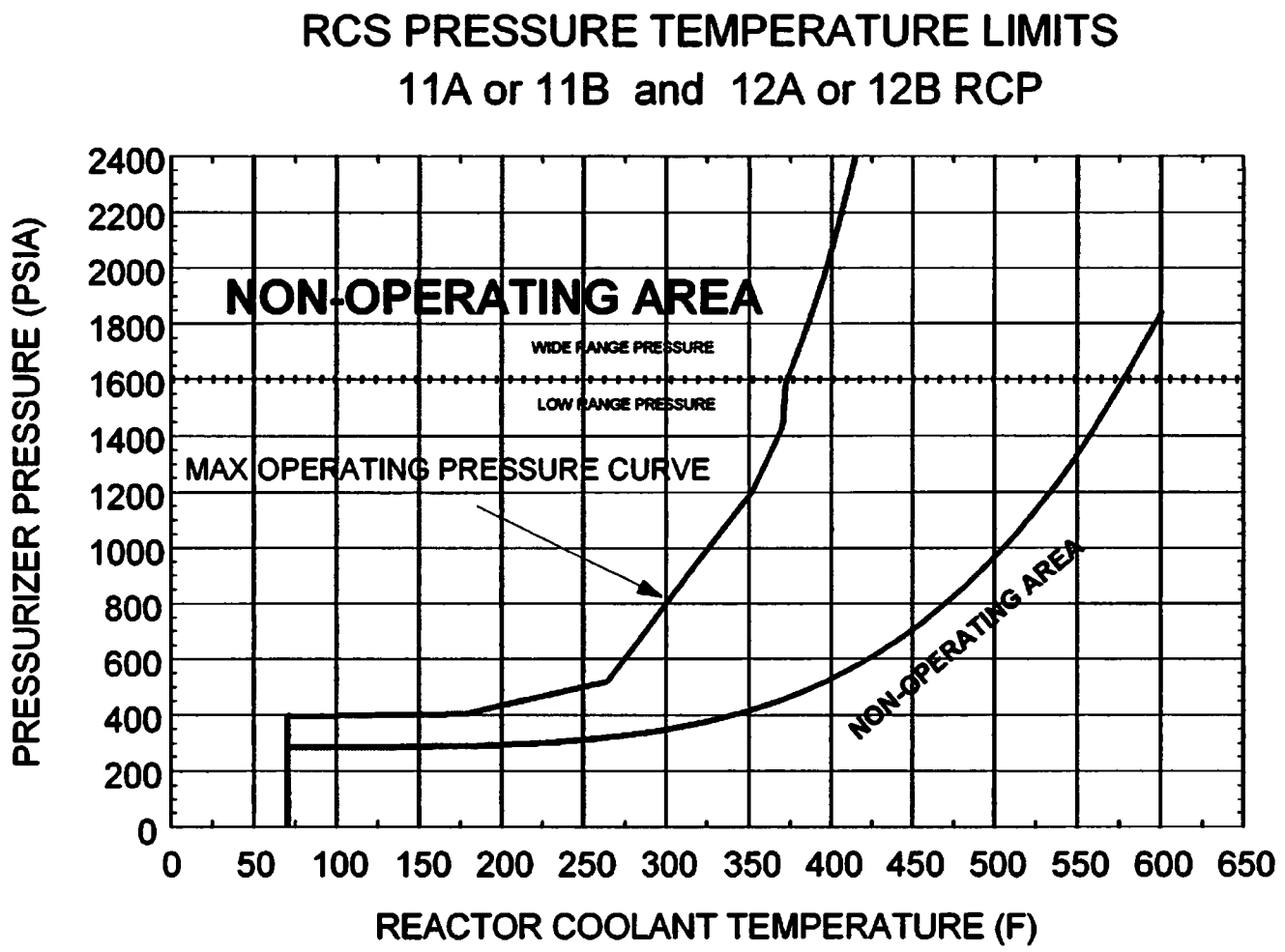

RCS P/T LIMITS - 4 RCPs RUNNING [B2547]

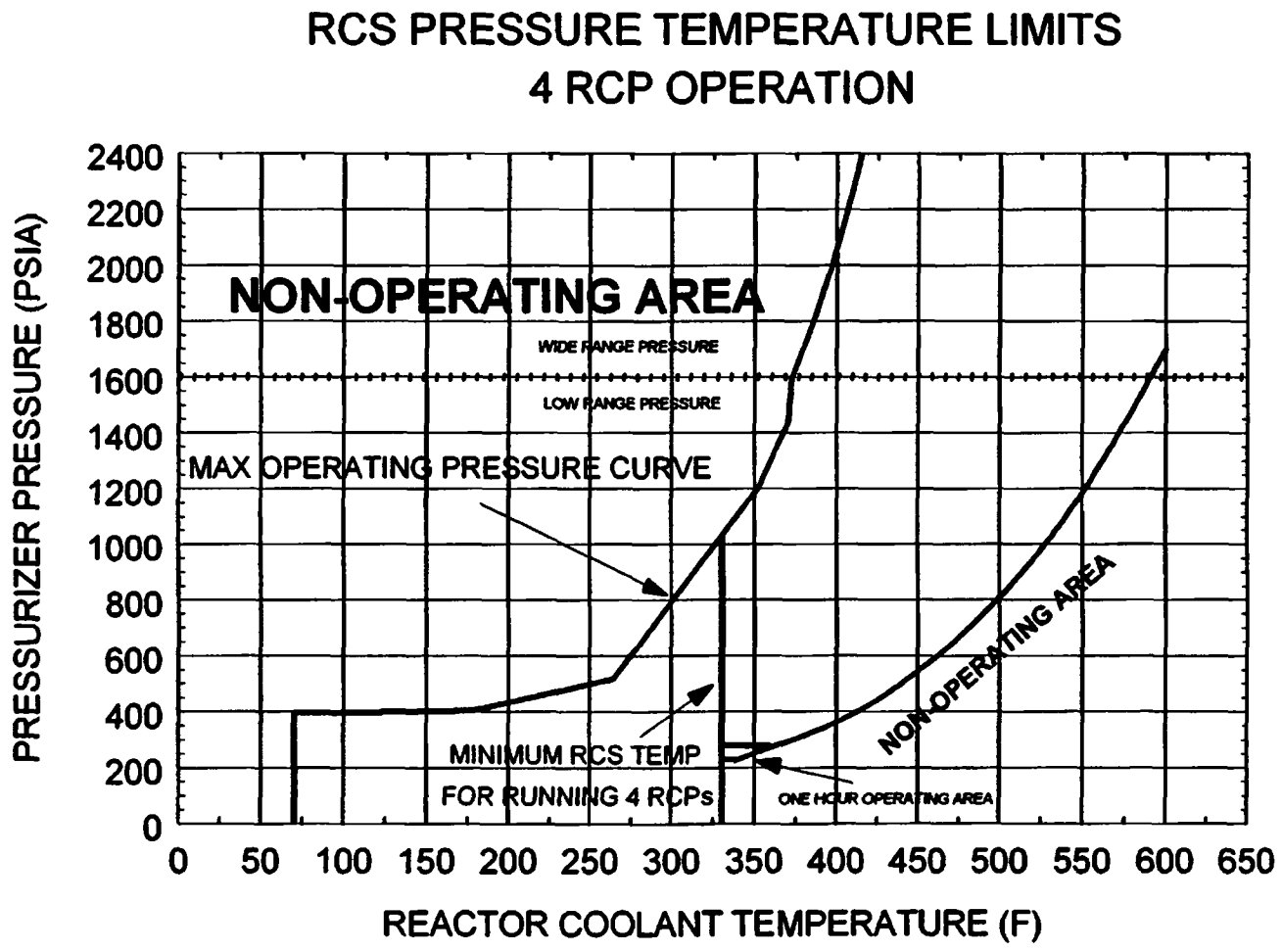

NARROW RANGE S/G LEVEL INDICATED vs ACTUAL

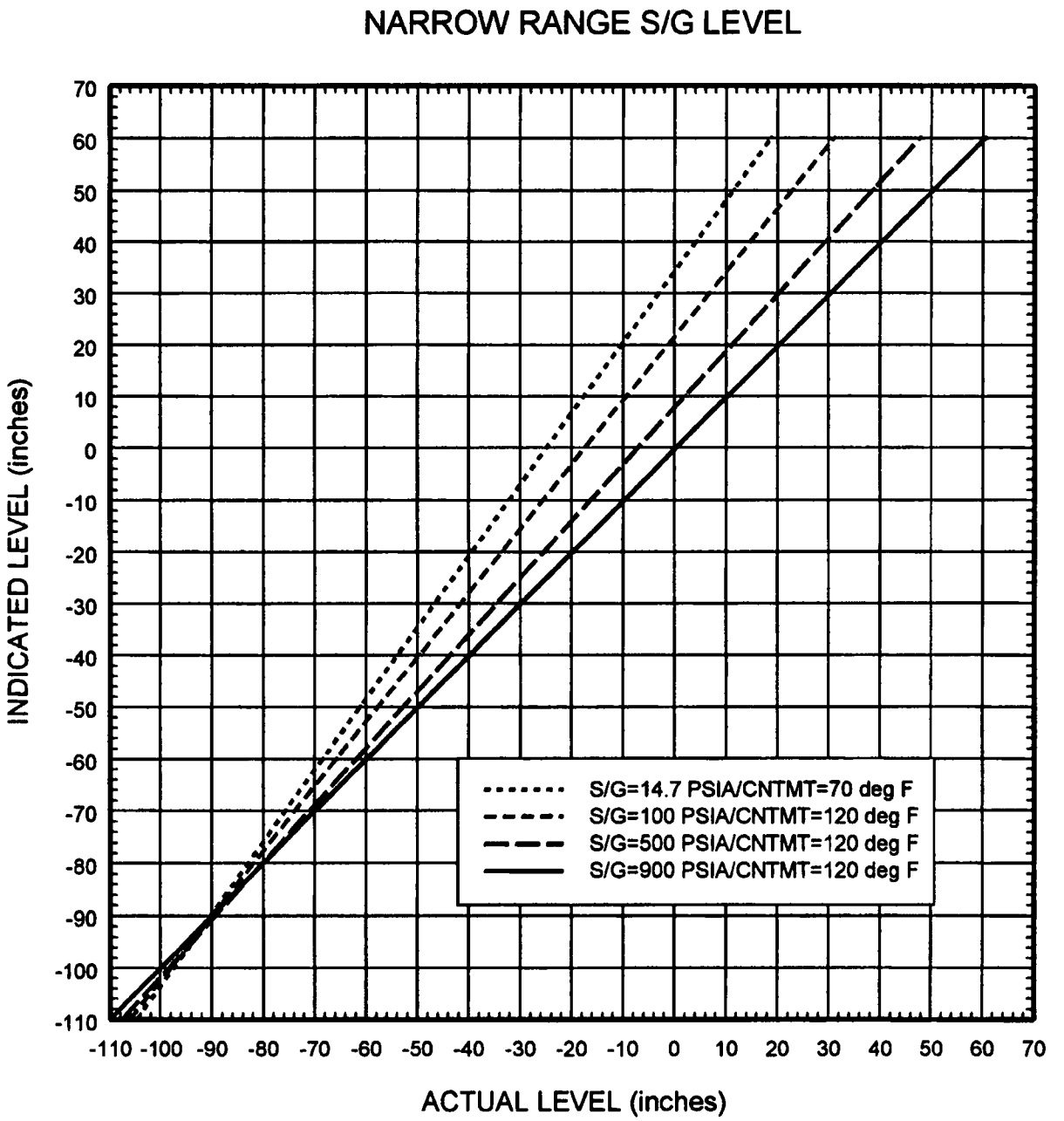

SIT OUTLET MOV POSITION INDICATION DIAGRAM

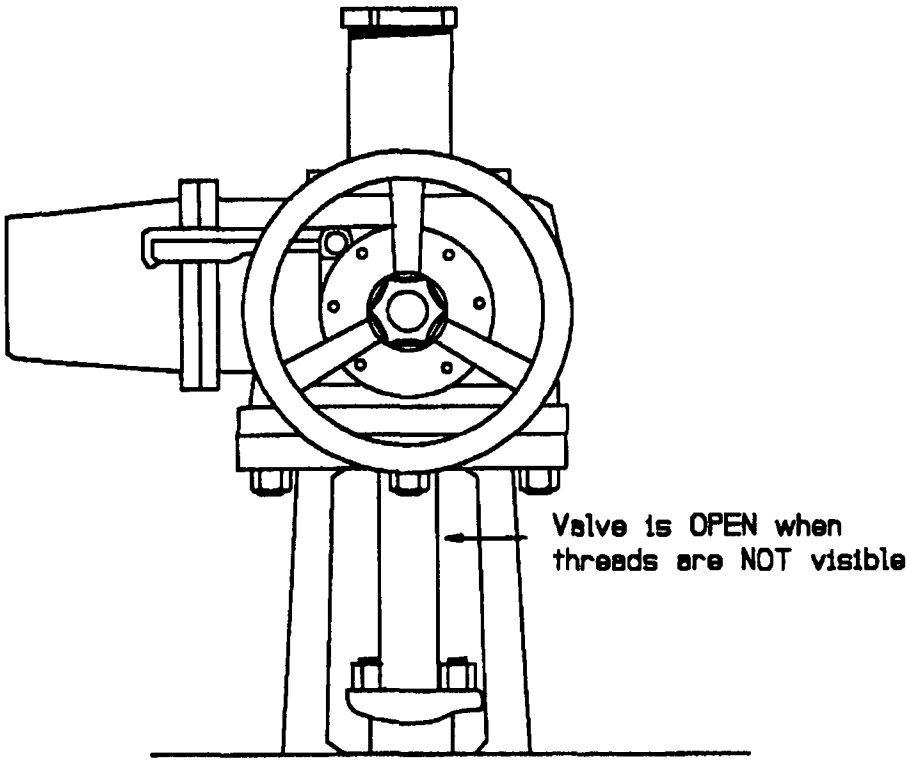

SDC FLOW CONTROL VALVE, 1-SI-306-CV, POSITION INDICATION DIAGRAM

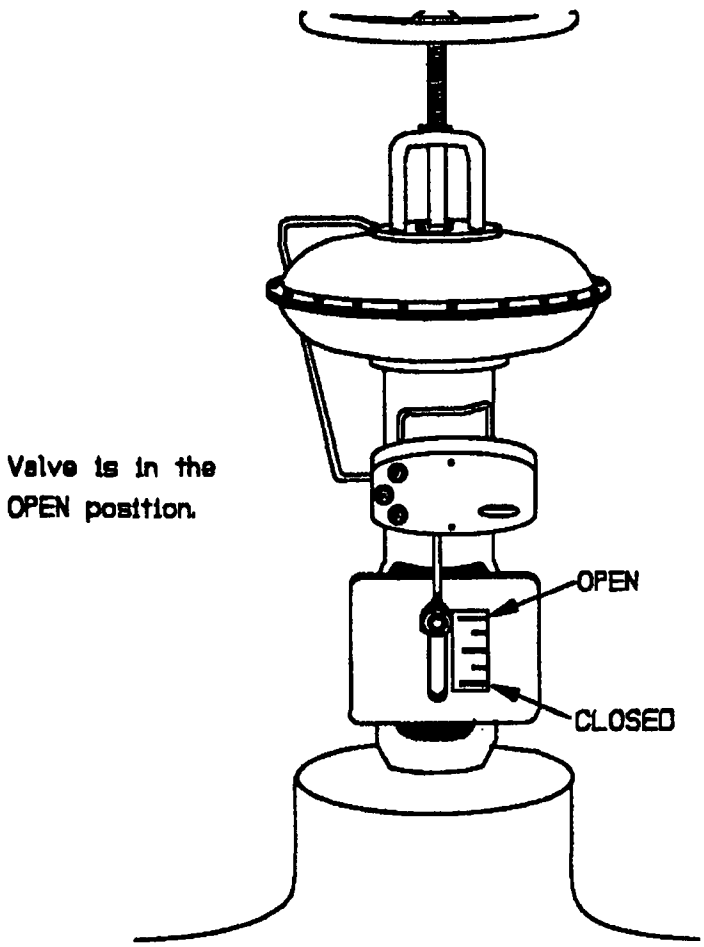

PRESSURIZER HEATUP LOG

PZR HEATUP NO. _____ DATE/TIME H/U STARTED_____

The heatup of the PZR is to be conducted at a linear rate **NOT** to exceed 100°F in any one hour period. PZR temperature should be recorded every 15 minutes and should **NOT** exceed 25°F in any 15 minute interval. The maximum step change in PZR temperature should **NOT** exceed 16.7°F. A soak period of 10 minutes should occur after each step change in temperature.

TIME	PZR PRESS (PSIA) (1)	PZR TEMP (°F) (2)	PZR SPRAY TEMP (°F) (3)	PZR H/U RATE (°F/HR)	PZR SPRAY DIFFERENTIAL TEMP (°F) (4)	INIT	CALC. CHECK INIT

Pressure and Temperature parameters may be read on the Control Board **OR** the Plant Computer

REVIEWED BY: _____
(SM or CRS)

[NOTES (1) - (4) ARE ON THE NEXT PAGE]

PRESSURIZER HEATUP LOG

(1) RCS Pressure:

Less Than 1550 PSIA: read the higher of PI-103 **OR** PI-103-1 **OR** read PI-105A

Greater Than 1550 PSIA: read PIC-100X **OR** PIC-100Y **OR** read PI-105A

(2) PZR Temperature: read TI-101

(3) Main Spray Temperature: read TIA-103 **OR** TIA-104

AUX Spray Temperature: read TI-229

(4) Maximum Spray ΔT is 400°F (Ref. TRM 15.4.2)

RCS HEATUP LOG

RCS HEATUP NO. _____ DATE/TIME H/U STARTED_____

RCS temperature shall be recorded every 15 minutes during heatup. A soak period of 10 minutes should occur after each step change in temperature. Reactor Vessel heatup limits are as follows:

RCS TEMPERATURE	H/U RATE LIMIT	15 MINUTE ΔT	STEP CHANGE ΔT
70°F to 246°F	80°F per hour	20°F	13.3°F
Greater than 246°F	100°F per hour	25°F	16.7°F

TIME	RCS(1) PRESS (PSIA)	RCS (2) TEMP (°F)	H/U RATE (°F/HR)	INIT	CALC. CHECK INIT	TIME	RCS(1) PRESS (PSIA)	RCS (2) TEMP (°F)	H/U RATE (°F/HR)	INIT	CALC. CHECK INIT

Pressure and Temperature parameters may be read on the Control Board **OR** the Plant Computer

REVIEWED BY: _____
(SM or CRS)

[NOTES (1) & (2) ARE ON THE NEXT PAGE]

RCS HEATUP LOG

(1) RCS Pressure:

Less Than 1550 PSIA: read the higher of PIC-103 **OR** PIC-103-1 **OR** read PI-105A

Greater Than 1550 PSIA: read PIC-100X **OR** PIC-100Y **OR** read PI-105A

(2) RCS Temperature: **Forced Flow:** read TI-112C **OR** TI-122C

Natural Circ: RCS Temp Greater than 358°F: read average of at least 2 CETs

RCS Temp Less than 358°F: read lowest valid displayed CET

SDC Flow: read TR-351

S/G LEVEL TRANSMITTERS PLACED IN SERVICE IN PREPARATION OF RCS HEATUP

A. This Appendix has been page checked against the LIST OF EFFECTIVE PAGES. **[M0002]**

____/_____
Init Date

B. I&C to ensure that the following instruments are in service with:

1. The instrument valves aligned.
2. The reference leg filled (if so equipped).
3. Entrained air vented from the instrument lines.

- **11 Steam Generator Level Transmitters:**
  - LT-1113A ____
  - LT-1113B ____
  - LT-1113C ____
  - LT-1113D ____
  - LT-1114A ____
  - LT-1114B ____
  - LT-1114C ____
  - LT-1114D ____
  - LT-1105 ____
  - LT-1111 ____

S/G LEVEL TRANSMITTERS PLACED IN SERVICE IN PREPARATION OF RCS HEATUP

- **12 Steam Generator Level Transmitters:**
  - LT-1123A ____
  - LT-1123B ____
  - LT-1123C ____
  - LT-1123D ____
  - LT-1124A ____
  - LT-1124B ____
  - LT-1124C ____
  - LT-1124D ____
  - LT-1106 ____
  - LT-1121 ____

C. This Appendix has been page checked against the LIST OF EFFECTIVE PAGES. **[M0002]**

____/_____
Init Date

INSTRUMENTS PLACED IN SERVICE AFTER FILLING THE RCS

A. This Appendix has been page checked against the LIST OF EFFECTIVE PAGES. **[M0002]**

____/_____
Init Date

B. I&C to ensure that the following instruments are in service with:

- The instrument valves aligned.
- The reference leg filled (if so equipped).
- Entrained air vented from the instrument lines.
  - FT-311 HPSI to Loop 11A ____
  - FT-321 HPSI to Loop 11B ____
  - FT-331 HPSI to Loop 11C ____
  - FT-341 HPSI to Loop 11D ____
  - PT-319 Safety Injection to Loop 11A ____
  - PT-329 Safety Injection to Loop 11B ____
  - PT-339 Safety Injection to Loop 11C ____
  - PT-349 Safety Injection to Loop 11D ____
  - PI-214X Charging Pump Discharge ____
  - PI-214Y Charging Pump Discharge ____
  - PI-214Z Charging Pump Discharge ____
  - PT-212 Charging Pump to Regen HX ____
  - FT-212 Charging Pump to Regen HX ____
  - PDT-111A 11 Steam Generator ΔP ____
  - PDT-111B 11 Steam Generator ΔP ____
  - PDT-111C 11 Steam Generator ΔP ____
  - PDT-111D 11 Steam Generator ΔP ____
  - PDT-121A 12 Steam Generator ΔP ____

INSTRUMENTS PLACED IN SERVICE AFTER FILLING THE RCS

- PDT-121B 12 Steam Generator ΔP ____
- PDT-121C 12 Steam Generator ΔP ____
- PDT-121D 12 Steam Generator ΔP ____
- PT-100X PZR Pressure Transmitter ____
- PT-100Y PZR Pressure Transmitter ____
- PT-103 PZR Pressure Transmitter ____
- PT-103-1 PZR Pressure Transmitter ____
- PT-102A PZR Pressure Transmitter ____
- PT-102B PZR Pressure Transmitter ____
- PT-102C PZR Pressure Transmitter ____
- PT-102D PZR Pressure Transmitter ____
- PT-105A PZR Pressure Transmitter ____
- PT-105B PZR Pressure Transmitter ____
- LT-110X PZR Level Transmitter ____
- LT-110Y PZR Level Transmitter ____
- LT-103 PZR Level Transmitter ____

C. This Appendix has been page checked against the LIST OF EFFECTIVE PAGES. **[M0002]**

____ / _____
Init Date

CALVERT CLIFFS NUCLEAR POWER PLANT

UNIT TWO

OP-1

PLANT STARTUP FROM COLD SHUTDOWN

REVISION 28

SAFETY RELATED

REFERENCE USE

APPROVAL AUTHORITY: J. V. Grooms

EFFECTIVE DATE: 7/30/2010

TABLE OF CONTENTS

	TITLE	PAGE
1.0	PURPOSE	5
2.0	APPLICABILITY/SCOPE	5
3.0	REFERENCES AND DEFINITIONS	6
4.0	PREREQUISITES	8
5.0	PRECAUTIONS	9
6.0	PERFORMANCE	14
6.1	PREPARE PRIMARY SYSTEMS FOR MODE 4 ENTRY	14
6.2	PREPARE SECONDARY PLANT FOR RCS HEATUP	18
6.3	SECURE SDC, START RCPs AND ENTER MODE 4	21
6.4	PREPARE SYSTEMS FOR MODE 3	34
6.5	ENTER MODE 3 AND HEATUP TO 375° F	37
6.6	CONTINUE RCS HEATUP TO 2250 PSIA AND 532° F	42
7.0	POST PERFORMANCE ACTIVITIES	49
8.0	BASES	49
9.0	RECORDS	51

FIGURE 1 RCS P/T LIMITS - 21A AND 21B RCPs RUNNING [B2547]

FIGURE 2 RCS P/T LIMITS - 22A AND 22B RCPs RUNNING [B2547]

FIGURE 3 RCS P/T LIMITS - 21A or 21B AND 22A or 22B RCPs RUNNING [B2547]

FIGURE 4 RCS P/T LIMITS - 4 RCPs RUNNING [B2547]

FIGURE 5 NARROW RANGE S/G LEVEL INDICATED vs ACTUAL

FIGURE 6 SIT OUTLET MOV POSITION INDICATION DIAGRAM

FIGURE 7 SDC FLOW CONTROL VALVE, 2-SI-306-CV, POSITION INDICATION DIAGRAM

APPENDIX 1 PRESSURIZER HEATUP LOG

TABLE OF CONTENTS

TITLE		PAGE
APPENDIX 2	RCS HEATUP LOG	
APPENDIX 3	S/G LEVEL TRANSMITTERS PLACED IN SERVICE IN PREPARATION OF RCS HEATUP	
APPENDIX 4	INSTRUMENTS PLACED IN SERVICE AFTER FILLING THE RCS	

LIST OF EFFECTIVE PAGES

PAGE NUMBER	REVISION
1-51	28
FIGURE	
1-7	28
APPENDIX	
1, Pgs 1-2 2, Pgs 1-2 3, Pgs 1-2 4, Pgs 1-2	28

PROCEDURE ALTERATIONS

PAGE NUMBER	REV/CHG
15,18,22,31,41-44	02800

1.0 PURPOSE

A. This procedure coordinates and directs actions required to take the plant from Cold Shutdown (Mode 5) with a pressurizer bubble, to Hot Standby (Mode 3).

2.0 APPLICABILITY/SCOPE

A. This procedure may be used to:

- Prepare the Secondary for Start-up **PER** Section 6.2, PREPARE SECONDARY PLANT FOR RCS HEATUP
- take the plant from Mode 5, with a Pressurizer bubble, to Mode 4 or Mode 3
- take the plant from Mode 4 to 3 only

B. Effective use of this procedure requires that Operations Management review plant status for system availability and out-of-service components, that would impact plant startup by entering Technical Specification Action Statements or prohibit system operation. Operations management must determine that adequate equipment is available and that actions are in place to return to service those components needed later during the start-up.

C. Procedure entry points other than at the beginning:

1. **IF** entering this procedure to take the plant from Mode 4 to 3, **THEN** Sections 6.1 through 6.3 may be omitted provided these sections are reviewed to ensure the minimum requirements for continued startup, established therein, are met.

2. **IF** plant conditions warrant entering this procedure at an off-normal point (somewhere other than the beginning of section 6.1 or 6.4), **THEN** the previous sections may be omitted provided they are reviewed to ensure the minimum requirements for continued startup, established therein, are met. **ALL** steps in the section entered must be signed off **OR** have CRS/SM permission **NOT** to be performed.

2.0 APPLICABILITY/SCOPE (Continued)

D. This procedure shall be used as follows:

1. With the approval of the CRS or SM, two or more steps within a section may be performed concurrently **OR** out of order. The steps must be evaluated in the sequence listed **AND** be determined **NOT** to be dependent upon the actions of other steps within that section.

2. With the approval of the CRS or SM, a step may be delayed **OR NOT** performed if equipment availability prevents its immediate performance. The step must be evaluated in the sequence listed **AND** determined **NOT** to impact the performance of the startup by prohibiting integrated plant operation **OR** entry into Technical Specification Action Statements to which Tech Spec LCO 3.0.4 applies.

3. When encountering a step whose actions have already been performed (e.g.; step says to start a pump and the pump is already running), equipment status shall be reviewed to ensure that existing conditions meet the intent of the step, and with the concurrence of the CRS or SM the step may be signed off.

4. Conditional steps (If, Then) may be marked N/A if the condition does **NOT** exist or apply.

5. Steps with initial spaces shall be initialed when completed.

6. This procedure is used in conjunction with OP-6 in order to perform a plant start-up. System lineups in OP-6 shall be completed, or have GS-SO exemption, for the systems required to support startup as they are called upon in this procedure.

7. This procedure may be used in conjunction with OP-7 when performing a plant start-up. When OP-7 is the controlling document, performance of steps in this OP shall be evaluated by the CRS or SM.

3.0 REFERENCES AND DEFINITIONS

3.1 DEVELOPMENTAL REFERENCES

A. Technical Specifications

B. P&IDs

1. OM-460 (62-729E), REACTOR COOLANT SYSTEM

2. OM-461 (62-744E), CHEMICAL & VOLUME CONTROL SYSTEM

3. OM-462 (62-731E), SAFETY INJECTION & CONTAINMENT SPRAY SYSTEMS

3.2 PERFORMANCE REFERENCES

A. OI-1A, Reactor Coolant System and Pump Operations

3.2 PERFORMANCE REFERENCES (Continued)

B. OI-1B, Quench Tank Operations

C. OI-1H, Pressurizer Pressure Control

D. OI-1I, Reactor Vessel Water Level Monitoring System

E. OI-2A, Chemical and Volume Control System

F. OI-2B, CVCS Boration, Dilution and Makeup

G. OI-2D, Purification System Operation

H. OI-3A, Safety Injection and Containment Spray

I. OI-3B, Shutdown Cooling

J. OI-5A, Containment and Cavity Cooling

K. OI-5C, CEDM Cooling

L. OI-8A, Steam Generator Blowdown System

M. OI-8C, Main Steam and Moisture Separator Reheater Vents and Drains

N. OI-9B, Main Turbine and Steam Generator Feed Pump Turbine Steam Seal System

O. OI-11A, Condensate System

P. OI-11D, Condensate and Feed System Layup and Layup Recovery

Q. OI-12A, Feedwater System

R. OI-12B, Steam Generator System

S. OI-13, Condenser Air Removal

T. OI-14A, Circulating Water System

U. OI-27D, Station Power 480 Volt System

V. OI-32A, Auxiliary Feedwater System

W. OI-34, Engineered Safety Features Actuation System

X. OI-36, Containment Purge System

Y. OI-43A, Main Turbine and Generator/Exciter Operation

Z. OP-6, Pre-Startup Checkoff

AA. STP O-5B-2, AFW Flowpath Verification

3.2 PERFORMANCE REFERENCES (Continued)

AB. STP O-63-2, Remote Shutdown and Post Accident Monitoring Instr Channel Check

AC. STP M-572A, Cold Leg Temperature Instrument Calibration Check, 2-TE-115 & 2-TE-125

AD. STP M-572B, Pressurizer Pressure Calibration Check 2-PT-103 and 2-PT-103-1

AE. STP M-672B, Pressurizer Relief Valve (ERV) Channel Functional Test

AF. NO-1-117, Intergrated Risk Management

AG. EN-1-115, Recording of Plant Transients/Operational Cycles

AH. NO-1-103, Conduct of Lower Mode Operations

AI. NO-1-200, Conduct of Operations

AJ. NO-1-206, Alarm Annunciator Control

AK. NO-1-210, Safety Function Determination Program

AL. NEOP-301, Operator Surveillance Procedure

3.3 DEFINITIONS

A. **MAJOR CHANGES** in RCS boron concentration are defined as any change greater than 50 PPM when one of the following is occurring: **[B0271][B0272]**

- Boration from 0% power to shutdown margin
- Boration from 0% power to refueling boron concentration
- Boration from shutdown margin to refueling boron concentration
- Dilution from shutdown margin to ECC
- Dilution from refueling boron concentration to shutdown margin
- Dilution from refueling boron concentration to ECC

4.0 PREREQUISITES

A. Unit 2 is in Mode 5 with a pressurizer bubble. Not Required for Section 6.2, PREPARE SECONDARY PLANT FOR RCS HEATUP ____

B. A dedicated SRO is assigned to supervise RCS filling operations and plant heatup. (Ref. NO-1-200) ____

C. Sufficient capacity exists in Reactor Coolant Waste Processing System (RCW) for heatup. ____

D. RCW aligned to accept CVCS diversion flow. ____

E. **IF** SDC Purification is secured,
THEN CVCS DIV TO DEGAS ISOL, 2-CVC-325, is open. ____

5.0 PRECAUTIONS

NOTE

- **ALL** equipment tagged for purposes of this procedure shall use red danger tags unless specifically directed to use a caution tag.
- **ALL** caution tags used for LTOP should state that the equipment is under LTOP control and is to be operated only with SM or CRS approval when directed by appropriate procedures.

A. **WHEN** RCS temperature is less than 301° F (as read on TI-112C **OR** 122C) **AND** the RCS is vented less then eight square inches (8 in^2), **THEN** the following Low Temperature Overpressure Protection (LTOP) controls shall be followed: **[B0064][B0599]**

1. **INADVERTENT RCP START SAFEGUARDS BELOW 150° F**

NOTE

IF the RCP LTOP tags were cleared in OP-7 in preparation for entering this procedure, **THEN** the RCP tagout needs to be rehung if a delay or termination of the heatup occurs and RCPs are secured

a. **ALL** RCPs are caution tagged by **TWO** of the following four methods:

- RCP handswitches (two per RCP) in PULL TO LOCK and RCP Breaker Trip Fuses (two per RCP) installed
- RCP Feeder Breaker handswitches in PULL TO LOCK and RCP Feeder Breaker Trip Fuses installed
- **ALL** eight RCP breakers racked out
- Both feeder breakers 252-1202 and 252-2201 racked out

2. **MASS ADDITION SAFEGUARDS**

a. Two HPSI pumps are tagged with their breakers racked out **OR** their discharge valves locked shut **AND** the third HPSI pump handswitch is caution tagged in PULL TO LOCK.

b. **ALL** eight MAIN and AUX HPSI Loop Isolation valves are caution tagged shut in PULL TO OVERRIDE.

c. SI TO CHG HDR CORE FLUSH, 2-CVC-269-MOV, is caution tagged shut.

d. **WHEN** the RCS is vented less than 2.6 square inches (2.6 in^2), **THEN** HPSI injection flow from the RWT shall be limited to less than 210 GPM **AND** through a single HPSI Loop Isolation valve only.

5.0.A PRECAUTIONS (Continued)

3. **OVERPRESSURE PROTECTION**

a. Both PORVs shall be operable with:

- STPs M-572A, M-572B and M-672B current
- Both PORV handswitches in MPT ENABLE:
  - 2-RC-402-ERV....2-HS-1406
  - 2-RC-404-ERV....2-HS-1408
- Both PORV Override Shut/Auto handswitches in AUTO:
  - 2-RC-402-ERV....2-HS-1402
  - 2-RC-404-ERV....2-HS-1404
- Both PORV Block valves open

NOTE
Initiation of compensatory actions **PER** NO-1-206 is required when the SDC PRESS HI alarm is INACTIVE.

b. **IF** the Plant Computer is available **AND** SDC is in operation, **THEN** a computer alarm for points, P103 and P103A, is established with a setpoint of 250 PSIA to warn the operator of a pressure excursion.

B. To prevent core uplift, do **NOT** operate more than three RCPs when RCS temperature is less than 300° F.

C. Do **NOT** exceed the following RCS heatup rates:

RCS Temperature	Maximum Heatup Rate
70° F to 246° F	80° F per hour
Greater than 246° F	100° F per hour

D. Pressurizer linear heatup rate is limited to 100° F per hour.

E. Do **NOT** exceed the following RCS cooldown rates:

RCS Temperature	Maximum Cooldown Rate
Greater than 146° F	100° F per hour
146° F or less	40° F per hour

F. **WHEN** a bubble exists in the Pressurizer, **THEN** the Pressurizer water temperature shall be maintained at least 30° F greater than the highest RCS loop temperature.

5.0 PRECAUTIONS (Continued)

G. **WHEN** S/G primary **OR** secondary TEMPERATURE is less than 85° F, **THEN** primary and secondary pressures shall be maintained less than 195 PSIA. (This is 5° F and 20 PSI more restrictive than the requirements of TRM 15.7.1, which requires S/G temperature be greater than 80° F when S/G pressure is greater than 215 PSIA)

H. RCS pressure and temperature shall be maintained within the limitations of FIGURE 1, FIGURE 2, FIGURE 3 **OR** FIGURE 4 (depending on RCP configuration).

I. RCPs and LPSI pumps may be secured for up to one hour to accommodate the transition between SDC and RCP operation, provided:

- No operations are permitted that would cause introduction of coolant into the Reactor Coolant System with boron concentration less than that required to meet the minimum boron concentration of LCO 3.1.1.
- Core outlet temperature is maintained at least 10° F below saturation temperature

J. To prevent challenging SDC suction header piping, RCS pressure shall be maintained less than 250 PSIA whenever the SDC suction valves are open.

K. To minimize high-energy line break concerns, the amount of time the RCS temperature is greater than 200° F will be minimized whenever the SDC Header Return Isolation Valves are open.

L. Criticality shall be anticipated whenever heatup **OR** cooldown **OR** dilution operations **OR** CEA withdrawals are in progress. **[B0138]**

M. To prevent condensation in the CEDM Coils, the CEDM Cooling or Cavity Cooling systems should **NOT** normally be operated when RCS temperature is less than 300° F.

N. Severe water hammer may result if RCS temperature is greater than 200° F and Main Feedwater flow is restored after it has been stopped for greater than 80 minutes. To prevent water hammer in the Main Feed Ring (MFR), Main Feed gooseneck purge shall be performed to restore Main Feedwater flow.

O. Manual operation of automatically controlled systems should **NOT** be performed unless a malfunction is apparent **AND** automatic system operation will **NOT** support continued plant operation **OR** as needed to conduct testing.

P. Systems shifted to manual operation shall be monitored frequently to ensure correct operation.

5.0 PRECAUTIONS (Continued)

Q. The following radiological precautions shall be followed:

- **ALL** fluids vented from contaminated systems shall be treated as radioactively contaminated until certified clean by Chemistry
- Radiation Safety Supervision shall be notified of any venting or draining operations in the RCA

R. To prevent an inadvertent loss of RCS inventory, closely monitor RCS and VCT levels when performing evolutions that could affect RCS inventory, such as manipulating Safety Injection or CVCS components. **[B0138]**

S. Limitations on RCS dilution from non-borated water sources in Mode 3, 4 or 5 are as follows:

1. No RCS heatup **SHALL** be in progress. **[B0221]**
2. The RCS shall be filled and vented.
3. The amount of dilution water has been calculated for the dilution method used **PER** OI-2B.
4. Targeted RCS boron concentration is the same or greater than the boron concentration for Shutdown Margin **PER** NEOP-301.
5. Dilution water shall be added in a minimum of two batches with Chemistry sampling and analyzing the RCS after each batch, to ensure the boron concentration is maintained greater than Shutdown Margin **PER** NEOP-301.
6. Within one hour of **AND** at least once per hour during a reduction of RCS boron concentration, RCS flow rate shall be determined to be at least 3000 GPM by verifying **ONE** of the following:
   - At least one RCP running
   - SDC in service with at least 3000 GPM flow through the RCS
7. The dilution rate shall be less than or equal to 88 GPM unless an RCP is in operation.

5.0 PRECAUTIONS (Continued)

NOTE

A S/G is considered available for heat removal when **ALL** of the following conditions exist: **[B0015]**

- Secondary side actual water level is greater than (-)40 inches
- Secondary side is intact
- Associated ADV is available to relieve steam
- Steam-driven AFW Pump available
- RCS is capable of being pressurized

It's preferred to have the S/G tubes full **BUT NOT** required due to time available would be less for time to boil **AND** equilibrium temperature reached in a long-term LOSDC is higher with U-tubes drained.

T. **IF** both S/Gs are **NOT** available for heat removal **AND** the Pressurizer manway is installed,
THEN the equipment listed in NO-1-200, CONTROL OF SHIFT ACTIVITIES, shall be available for the existing plant condition. **[B0066] [B0116]**

U. **WHEN** performing a **MAJOR CHANGE** in RCS boron concentration,
THEN VERIFY that at least one RCP is running **AND** PZR spray is in operation until the desired boron concentration has been **REACHED AND VERIFIED.** **[B0271][B0272]**

V. If diluted pockets are suspected in the RCS, PWR Reload Analysis must be notified to determine a process for starting RCPs. **[B0272]**

W. TI-112C and TI-122C SHALL be used for LTOP and Tech Spec temperature limits because TIA-115 and TIA-125 have instrument uncertainties greater than those accomodated for by LTOP analysis. **[B0599]**

X. Operation of Charging Pumps with incorrectly set or failed discharge desurgers or suction stabilizers can result in failure of CVCS piping, CVCS piping supports, or pump damage.

6.0 PERFORMANCE

NOTE
Section 6.2, PREPARE SECONDARY PLANT FOR RCS HEATUP, is an independent section that may be performed concurrently with Section 6.1, PREPARE PRIMARY SYSTEMS FOR MODE 4 ENTRY

6.1 PREPARE PRIMARY SYSTEMS FOR MODE 4 ENTRY

NOTE
Major steps (A, C, D...) in this section may be performed concurrently or in any order.

A. **INITIATE** completion of OP-6, Section 6.1. ____

B. **IF** CET temperature indication is available on PAMS,
THEN ENSURE the temperature alarm setpoint, HICET_SETPT is 700° F **PER** OI-1I, Post Accident Monitoring System Instrumentation.

C. **REQUEST** I&C to ensure that the RCS instrumentation listed in APPENDIX 4, INSTRUMENTS PLACED IN SERVICE AFTER FILLING THE RCS, is in service. ____

D. **CHECK** that the temporary Pressurizer vent rig is removed and flanged off. ____

E. **ENSURE** all RCP CBO flows indicate flow. ____

1. **IF** an excess flow check valve is suspected to be shut,
THEN PERFORM the following:

a. **CHECK** all RCPs are secured. ____

b. **SHUT** the RCP CBO Isolation valves:

- RCP CBO OUTBD ISOL, 2-CVC-505-CV ____
- RCP CBO INBD ISOL, 2-CVC-506-CV ____

c. **OBSERVE** all RCP CBO flows respond as expected. ____

d. **WHEN** adequate time to allow equalization across the excess flow check valve has elapsed,
THEN OPEN the RCP CBO Isolation valves:

- RCP CBO OUTBD ISOL, 2-CVC-505-CV ____
- RCP CBO INBD ISOL, 2-CVC-506-CV ____

e. **ENSURE** all RCP CBO flows indicate flow. ____

(1) **REPEAT** steps E.1.a through E.1.d as desired.

6.1 PREPARE PRIMARY SYSTEMS FOR MODE 4 ENTRY (Continued)

NOTE

- The intent is to run one Charging Pump during the startup, **AND** to make adjustments to its desurger per OI-2A, Section titled: ADJUSTING CHARGING PUMP DISCHARGE DESURGERS WHEN RCS PRESSURE IS BELOW NORMAL OPERATING PRESSURE, as RCS pressure is raised.
- The other two Charging Pumps discharge desurgers can be set at known pressures, **AND** can be adjusted as required, if the pump will be placed in service.

02800

F. **ENSURE** Charging Pumps are prepared for operation **PER** OI-2A, Section titled: PRESSURIZING CHARGING PUMP SUCTION STABILIZERS AND DISCHARGE DESURGERS, as follows: 02800

- **ENSURE** at least one Charging Pump has its discharge desurger prepared for operation at the current RCS pressure. ____
- **IF** available, **THEN ENSURE** one Charging Pump has its discharge desurger prepared for operation at an intermediate RCS pressure. ____
- **IF** available, **THEN ENSURE** one Charging Pump has its discharge desurger prepared for operation at normal RCS pressure. ____

G. **RE-ESTABLISH** setpoints for ESFAS signals as follows:

1. **IF** SIAS Pressurizer Pressure signals are unblocked, **THEN RE-ESTABLISH** SIAS Pressurizer Pressure blocks **PER** OI-34. ____
2. **IF** SGIS signals are unblocked, **THEN RE-ESTABLISH** SGIS blocks **PER** OI-34. ____
3. **PERFORM** an Independent Verification that SIAS Pressurizer Pressure **AND** SGIS potentiometers are set to the values found in the Setpoint File. ____

H. **IF** Containment Purge was utilized during this outage, **THEN PERFORM** the following:

1. **NOTIFY** the Machine Shop to install blind flanges on Containment Purge penetrations. ____
2. **ENSURE** an LLRT has been performed on the Containment Purge penetrations. ____
   a. **WHEN** the LLRT is completed, **THEN LOG** that an LLRT has been performed on the Containment Purge penetrations in fulfillment of Tech Spec SR 3.6.1.1. ____

I. **REQUEST** Chemistry to sample the RCS for O_2 in preparation for Mode 4 entry. ____

6.1 PREPARE PRIMARY SYSTEMS FOR MODE 4 ENTRY (Continued)

J. **PRIOR** to entering Mode 4, **VERIFY** the RCS boron concentration is less than 2700 PPM **OR** a Boron Inventory Verification calculation has been performed by Chemistry to ensure existing quantity of sodium tetraborate is sufficient for the existing RCS boron concentration. **[B0203]** ____

1. **IF** RCS boron concentration is greater than 2700 PPM, **THEN ENTER** a note on the Shift Turnover Sheet **NOT** to makeup to 21 **OR** 22 BASTs until RCS boron concentration is less than or equal to 2700 PPM. ____

> **NOTE**
> The Boron Inventory Verification calculation must be performed prior to makeup to the BASTs.

a. **IF** makeup to the BASTs is necessary, **THEN** prior to filling the BASTs, **REQUEST** Chemistry to perform a Boron Inventory Verification calculation to ensure existing quantity of sodium tetraborate is sufficient for the new boron inventory. ____

K. **REQUEST** Chemistry to sample the SITs for boron concentration. ____

1. **IF** any SIT boron concentration is less than 2450 ppm **OR** level below 187 inches, **THEN RAISE** its boron concentration to between 2450 and 2700 ppm **OR** level to greater than 187 inches **PER** OI-3A, section titled, FILLING SAFETY INJECTION TANK(S) WHILE IN COLD SHUTDOWN. ____

L. **ALIGN** the SIT Outlet MOVs as follows:

1. **ENSURE** SIT Outlet MOV handswitches in SHUT:

- 21B 2-SI-614-MOV.....2-HS-3614 ____
- 21A 2-SI-624-MOV.....2-HS-3624 ____
- 22B 2-SI-634-MOV.....2-HS-3634 ____
- 22A 2-SI-644-MOV.....2-HS-3644 ____

2. **UNLOCK AND PLACE** SIT Outlet MOV breakers in the ON position:

- 21B 2-SI-614-MOV.....52-21442 ____
- 21A 2-SI-624-MOV.....52-21443 ____
- 22B 2-SI-634-MOV.....52-20442 ____
- 22A 2-SI-644-MOV.....52-20443 ____

6.1 PREPARE PRIMARY SYSTEMS FOR MODE 4 ENTRY (Continued)

M. **VERIFY** Containment closure Inspection, OP-6, Section 6.2, has been completed ____

****** END ******

6.2 PREPARE SECONDARY PLANT FOR RCS HEATUP

A. **REQUEST** Chemistry to sample the S/Gs. ____

B. **NOTIFY** Chemistry that local S/G sample points will be unavailable when the S/G level transmitters are placed in service. ____

C. **REQUEST** I&C to remove the temporary tygon tubing level indicator, fill the reference legs, vent and place in service the S/G level transmitters listed in APPENDIX 3, S/G LEVEL TRANSMITTERS PLACED IN SERVICE IN PREPARATION OF RCS HEATUP. ____

D. **ENSURE** 12 or 22 SERVICE BUS is energized, to allow for RCP starting. ____ 02800

E. **ENSURE** all required 13 KV cable testing complete and satisfactory, per Electrical Maintenance, to allow for RCP starting. ____ 02800

NOTE

- Actual S/G level may be determined by comparing remote indicated level to FIGURE 5, NARROW RANGE S/G LEVEL INDICATED vs ACTUAL.
- It is preferrable to maintain S/G levels low in the band, approximately -35" actual level, so AFW can be used to limit RCS heatup after RCPs are started.

F. **ENSURE** that both S/Gs are between (-)40 and (+)60 inches actual level. ____

G. **IF** the Condensate System is secured,
THEN PERFORM ONE of the following: (check one) ____

☐ **IF** the Condensate System has been secured for an extended period **OR** based on Chemistry recommendations,
THEN INITIATE condensate cleanup methods **PER** OI-11D.

☐ **PLACE** the Condensate System in operation, with the Condensate Booster pumps secured, **PER** OI-11A.

H. **IF** the Unit is returning from an extended outage,
THEN ENSURE S/Gs are aligned for startup **PER** OI-12B, Appendix titled S/G ALIGNMENT FOR STARTUP FOLLOWING AN OUTAGE. ____

6.2 PREPARE SECONDARY PLANT FOR RCS HEATUP (Continued)

NOTE
OP-2 directs establishing Condenser vacuum if equipment availability precludes establishing Condenser vacuum at this point.

I. **IF** permissible,
THEN ESTABLISH Condenser Vacuum as follows:

1. **REQUEST** Chemistry to ensure the Secondary Sample Sink is in operation **OR** provisions are made to monitor Hotwell conductivity while placing the Circulating Water system in service. ____

2. **PLACE** the Circulating Water system in service **PER** OI-14A. ____

3. **ENSURE** both Main Feedwater pump Turbines are on their turning gears **PER** OI-12A **OR** isolated from the Main Condenser. ____

4. **PLACE** the Gland Seal and Exhaust System in operation using Auxiliary Steam **PER** OI-9B. ____

5. **IF** the Unit is returning from an extended outage,
THEN ENSURE the High Pressure Drains are aligned to the Aux Blowdown Tank **PER** OI-8C section, Startup High Pressure Drains. ____

6. **ESTABLISH** Main Condenser Vacuum **PER** OI-13. ____

7. **IF** desired,
THEN OPEN both MSIVs:

   - 21 MSIV.....2-MS-4043-CV ____
   - 22 MSIV.....2-MS-4048-CV ____

6.2 PREPARE SECONDARY PLANT FOR RCS HEATUP (Continued)

NOTE

Step 6.2.J may be N/A'ed if the Unit has been in Cold Shutdown for less than or equal to 30 days **OR** STP O-67B-2 Sections 6.2 & 6.3 have been completed satisfactorily within the last 30 days.

CAUTION

- Do **NOT** exceed the following RCS cooldown rates:

RCS Temperature	Maximum Cooldown Rate
Greater than 146° F	100° F per hour
146° F or less	40° F per hour

- To prevent cooldown of the S/Gs below 100° F, limit S/G level rise to 2 inches during AFW testing.

J. **PERFORM** STP O-5B-2 to verify the flow path from the CST to both S/Gs via each Auxiliary Feedwater pump. ____

- **LOG** initiation of AFW flow in the Transient Tracking Log. ____
- **LOG** completion of STP O-5B-2, stating the runs were made to fulfill Tech Spec SR 3.7.3.7. ____

****** END ******

6.3 SECURE SDC, START RCPs AND ENTER MODE 4 — INITIALS

NOTE

- This section directs a relatively quick transition from SDC to RCS forced circulation using RCPs and entry to Mode 4.
- This section requires operator actions inside Containment to:
  - obtain S/G secondary temperatures
  - check L/D EXCESS FLOW CKV BYP, 2-CVC-344, locked shut
  - support RCP starts

A. Prerequisite sections completed: 6.1, 6.2. ____

B. **REQUEST** Chemistry to sample the RCS and Quench Tank for O_2 concentration while continuing with this section. ____

C. **IMPLEMENT** Control Room access restrictions **PER** NO-1-200. ____

D. **ENSURE** the following:

1. I&C has completed placing in service the RCS instrumentation listed in APPENDIX 4, INSTRUMENTS PLACED IN SERVICE AFTER FILLING THE RCS. ____
2. I&C has completed placing in service the S/G level instrumentation listed in APPENDIX 3, S/G LEVEL TRANSMITTERS PLACED IN SERVICE IN PREPARATION OF RCS HEATUP. ____
3. Pressurizer level between 144 and 170 inches. **[B0064]** ____
4. Pressurizer pressure is less than 320 PSIA. **[B0064]** ____
5. Primary temperatures are greater than or equal to 100° F **AND** secondary temperatures are greater than or equal to 85 ° F. ____

6.3.D SECURE SDC, START RCPs AND ENTER MODE 4 (Continued) **INITIALS**

NOTE

- If SDC is secured, RCS temperature shall be determined using RCS T_{AVG} (the average of RCS T_{HOT} and T_{COLD}) from the loop with the largest delta T
  - (21 loop) 2-TI-112H, 2-TI-112C
  - (22 loop) 2-TI-122H, 2-TI-122C
- If SDC is in operation, RCS temperature shall be determined using the SDC Temperature Recorder, 2-TR-351, **OR** computer points as follows:
  - If **NO** LPSI flow rate changes have been made in the previous 30 minutes, using the average SDC Temperature (the average of FROM RCS(red pen) and TO RCS(blue pen) **OR** computer points T351X and T351Y
- **IF** SDC is in operation, **AND** RCS temperature can **NOT** be obtained by averaging, **THEN** RCS temperature shall be determined using the SDC Temperature Recorder, 2-TR-351, **OR** computer points as follows:
  - S/G 30° F above RCS temperature: RCS temperature shall be determined using TO RCS(blue pen) **OR** computer point T351X
  - S/G 60° F below RCS temperature: RCS temperature shall be determined using FROM RCS(red pen) **OR** computer point T351Y
- Steam Generator temperature is obtained locally using a hand-held surface instrument on the Steam Generator shell between the Steam Generator Tube Sheet and water level covering the tubes

6. Steam Generator temperature limits are as follows:
   - S/G temperature is no greater than 30° F above RCS temperature **[B0064]** ____
   - S/G temperature is no more than 60° F below RCS temperature **[B0410]** ____
7. RCP LTOP tagout cleared. ____
8. Power aligned to the RCP breakers **PER** OI-27B, Section titled: OPERATION OF RCP BUS FEEDER BREAKERS. ____ 02800
9. **ALL** operations that could cause dilution of the RCS boron concentration are terminated until an RCP is running. **[B0271]** ____
10. Core outlet temperature is being maintained at least 10° F below saturation temperature for RCS pressure until an RCP is running. ____
11. PZR SPRAY VLV CONTR, 2-HIC-100, in MANUAL with both Pressurizer Spray valves shut. ____

6.3.D SECURE SDC, START RCPs AND ENTER MODE 4 (Continued) **INITIALS**

12. Chemistry has determined that RCS dissolved O_2 is less than 100 ppb **OR** a hydrazine residual exists in the RCS. ____

13. 21A or 21B **AND** 22A or 22B RCPs are available for operation. ____

14. **NOTIFY** PES-FIN to prepare to monitor RCP vibration while starting RCPs. **[B0368]** ____

E. **RESTORE** S/G level inputs into DFW **PER** OI-12A FEEDWATER SYSTEM, Section Titled UNBYPASSING DFW CHANNEL (CPU). ____

F. **WHEN** Quench Tank O_2 concentration is less than 4%, **THEN ESTABLISH** VCT H_2 overpressure **PER** OI-2A. **[B0067]** ____

CAUTION
Decay heat levels must be evaluated to ensure heatup rate limits are **NOT** exceeded.

G. **DETERMINE** S/G heat removal method(s) to be used to control RCS heatup, from those available: (listed in order of preferred use) **[B0598]** ____

- MSIVs or MSIV Bypass valves, and Turbine Bypass valves ____
- Main Steam Line drains:
  - DR-5 ORIF BYP.....2-MS-6603-MOV ____
  - DR-6 ORIF BYP.....2-MS-6604-MOV ____
- S/G Blowdown ____
- Atmospheric Dump valves, with ADV CONTR 2-HIC-4056, in MANUAL ____

H. **AFTER** consulting Chemistry **AND** reviewing system availability, **THEN DETERMINE** S/G feedwater source to be used: (listed in order of preferred use) (check one) ____

☐ Condensate Booster pump ____

☐ Auxiliary Feedwater **PER** OI-32A ____

6.3 SECURE SDC, START RCPs AND ENTER MODE 4 (Continued) **INITIALS**

CAUTION
Failure to properly perform this step may result in severe Waterhammer in the Steam Generator Gooseneck.

I. **PLACE** Blowdown in service with at least 50 GPM flow (a minimum of 25 GPM for each Steam Generator is required) **PER** OI-8A, BLOWDOWN SYSTEM; **[B0719]** ____

- **IF** Blowdown is unavailable **OR** undesirable,
  THEN PERFORM the following;
  (N/A if Blowdown is in service)

  - **IF** possible,
    THEN MAINTAIN the Feedwater Control System in AUTO.

  OR

CAUTION
IF a steam void has formed in the Gooseneck **AND** a rapid increase in feedwater flow is conducted,
THEN severe Steam Generator Gooseneck Waterhammer may result.

- Any adjustment to the Output of the feedwater Bypass Valve controller **OR** the Steam Generator Feed Pump controllers must be conducted very slowly.

  - **IF** the Feedwater Control System must be operated in MANUAL,
    THEN LIMIT the Output of the associated feedwater Bypass Valve controller to less than 20% until a +3 inch S/G level rise is achieved within a 10 minute period.

NOTE
Heatup rate with 2 RCPs operating is approximately 35° F/Hr. This can be used to estimate time to MODE 4.

J. **ENSURE** OP-6, Section 6.1 is working to be completed. Any outstanding items should be evaluated by an SRO to determine if they can be successfully completed prior to MODE 4. ____

6.3 SECURE SDC, START RCPs AND ENTER MODE 4 (Continued) **INITIALS**

CAUTION

- SDC and **ALL** RCPs may be secured for up to one hour during the transition from SDC to forced circulation. (Tech Spec 3.4.6)
- Do **NOT** exceed the following RCS heatup rates:

RCS Temperature	Maximum Heatup Rate
70° F to 246° F	80° F per hour
Greater than 246° F	100° F per hour

- Do **NOT** exceed a Pressurizer linear heatup rate of 100° F per hour.

K. **UTILIZE** Pressurizer heaters to raise RCS pressure to between 240 and 250 PSIA. ____

1. **RECORD** Pressurizer heatup data in APPENDIX 1, PRESSURIZER HEATUP LOG. ____

L. **IF** the RCS was drained to the top of the hot leg, **THEN ENSURE** RCP CBO flow has been established to the VCT for greater than 30 minutes with RCS pressure greater than or equal to 215 PSIA, to vent the RCP seal cartridges. ____

M. **SECURE** SDC as follows:

1. **ADJUST** SDC TEMP CONTR, 2-HIC-3657, to shut SDC Temperature Control Valve 2-SI-657-CV. ____
2. **ADJUST** SDC FLOW CONTR, 2-FIC-306, in MANUAL to 800 GPM. ____
3. **STOP** running LPSI PPs **AND PLACE** in PULL TO LOCK. ____
4. **SHUT** both SDC HDR RTN ISOL valves:
   - SDC HDR RTN ISOL.....2-SI-651-MOV ____
   - SDC HDR RTN ISOL.....2-SI-652-MOV ____
5. **VERIFY** both SDC Hx Component Cooling outlet valves are SHUT:
   - 21 SDC HX CC OUT.....2-CC-3828-CV ____
   - 22 SDC HX CC OUT.....2-CC-3830-CV ____

6.3.M SECURE SDC, START RCPs AND ENTER MODE 4 (Continued) **INITIALS**

NOTE
The requirement for compensatory actions of NO-1-206 no longer apply for the "SDC PRESS HI" alarm when 2-SI-651-MOV and 2-SI-652-MOV are shut.

6. **MAKE** computer points P103 and P103A, "SDC PRESS HI" alarm INACTIVE **AND ENTER** computer points in the Computer Points Made inactive log. ____

N. **COMMENCE** reading RCS temperature on the CETs with SDC and **ALL** RCPs secured. **[B0064]** ____

- **COMMENCE** recording RCS and Pressurizer heatup data in APPENDIX 1 and APPENDIX 2. ____

CAUTION
- Do **NOT** exceed the following RCS heatup rates:

RCS Temperature	Maximum Heatup Rate
70° F to 246° F	80° F per hour
Greater than 246° F	100° F per hour

- Do **NOT** exceed a Pressurizer linear heatup rate of 100° F per hour.

O. **RAISE** RCS pressure to above the minimum pressure curve of FIGURE 3 but **NOT** to exceed 320 PSIA. (The following table represents the data used to generate FIGURE 3.) ____

RCS TEMPERATURE	RCS PRESSURE
100.00	285.50
150.00	287.60
206.00	294.70
250.00	311.80

1. **EVALUATE** RCS heatup effects on core reactivity and shutdown margin. **[B0270]** ____

2. **UTILIZE** pressurizer heaters to raise RCS pressure. ____

6.3 SECURE SDC, START RCPs AND ENTER MODE 4 (Continued) **INITIALS**

P. **WHEN** RCS pressure reaches 300 PSIA, **THEN**:

1. **ENSURE** the SIT Outlet MOVs open. ____

2. **PLACE** the SIT OUT keyswitches in OPEN:

   - 21B 2-SI-614-MOV.....2-HS-3614 ____
   - 21A 2-SI-624-MOV.....2-HS-3624 ____
   - 22B 2-SI-634-MOV.....2-HS-3634 ____
   - 22A 2-SI-644-MOV.....2-HS-3644 ____

3. **LOCK** the SIT Outlet MOV breakers in the OFF position:

   - 21B 2-SI-614-MOV.....52-21442 ____
   - 21A 2-SI-624-MOV.....52-21443 ____
   - 22B 2-SI-634-MOV.....52-20442 ____
   - 22A 2-SI-644-MOV.....52-20443 ____

Q. **ENSURE** Pressurizer level between 144 and 170 inches. **[B0064]** ____

R. **OBTAIN** a set of RCS heatup data for APPENDIX 2, just prior to starting the first set of RCPs. ____

6.3 SECURE SDC, START RCPs AND ENTER MODE 4 (Continued) **INITIALS**

NOTE
Maintaining low RCS pressure will be required to prevent exceeding Maximum Spray Water Temperature Differential, TRM 15.4.2. Operational experience indicates that spray line temperature will **NOT** heat up with the RCS until the 21A/B RCPs are started.

CAUTION
The first RCP may be started in the system with 22 13.8KV Service Bus voltage greater than 14.5KV as long as the second RCP is started within 5 minutes **AND** bus voltage subsequently drops below 14.5KV.

S. **START** one of the following sets of RCPs **PER** OI-1A:

- 21A and 22A ____

OR

- 21A and 22B ____

OR

- 21B and 22A ____

OR

- 21B and 22B ____

6.3 SECURE SDC, START RCPs AND ENTER MODE 4 (Continued) **INITIALS**

T. **IF** a pair of RCPs can **NOT** be started,
THEN RE-INITIATE SDC as follows:

1. **STOP** the running RCP. ____
2. **LOWER** RCS pressure to between 70 and 250 PSIA. ____
3. **ADJUST** SDC FLOW CONTR, 2-FIC-306, to 95% output signal (2-SI-306-CV 5% open). ____
4. **OPEN** SDC HDR RETURN ISOL valves:
   - SDC HDR RETURN ISOL.....2-SI-651-MOV ____
   - SDC HDR RETURN ISOL.....2-SI-652-MOV ____
5. **OPEN** both SDC Hx Component Cooling outlet valves:
   - 21 SDC HX CC OUT.....2-CC-3828-CV ____
   - 22 SDC HX CC OUT.....2-CC-3830-CV ____
6. **START** a LPSI PP. ____
7. Slowly **ADJUST** 2-FIC-306 to obtain SDC flow of 3000 GPM. ____
8. **ADJUST** the SDC FLOW CONTR, 2-FIC-306, setpoint to 3000 GPM **AND PLACE** in AUTO. ____
9. **ADJUST** SDC TEMP CONTR, 2-HIC-3657, to maintain RCS temperature between 150° F and 195° F. ____
10. **NOTIFY** Plant Chemistry to obtain an RCS activity sample due to the reinitiation of SDC. ____
11. **NOTIFY** Radiation Safety of possible increased radiation levels in the Auxiliary Building. ____
12. **LOG** initiation of SDC in the Transient Tracking Log. ____
13. **IF** needed,
    THEN START the second LPSI PP **PER** OI-3B. ____
14. **WHEN** conditions are established to start two RCPs,
    THEN RE-ENTER this Section at step K.

6.3 SECURE SDC, START RCPs AND ENTER MODE 4 (Continued) **INITIALS**

U. **IF** desired to reduce RCS heatup rate,
THEN PERFORM the following as necessary:

NOTE

- 23 AFW pump is the preferred pump.
- It is preferrable to have S/G levels low in the band, approximately -35" actual level, to maximize the amount of AFW which can be added to limit RCS heatup.

* **COMMENCE** feeding the S/Gs with AFW **PER** OI-32A. ____

NOTE

Actual S/G level may be determined by comparing remote indicated level to FIGURE 5, NARROW RANGE S/G LEVEL INDICATED vs ACTUAL.

1. **ENSURE** that both S/G levels are maintained between (-)40 and (+)60 inches actual level. ____

* **IF** SHUT,
THEN OPEN both MSIVs:

- 21 MSIV.....2-MS-4043-CV ____
- 22 MSIV.....2-MS-4048-CV ____

CAUTION

The requirements of Tech Spec 3.4.7 shall be adhered to if it becomes necessary to secure RCPs.

* **SECURE** the running RCPs **AND PERFORM** one of the following: ____

1. **IF** desired to restart the RCPs,
THEN RETURN to Step S. ____
2. **IF** desired to reinitiate SDC,
THEN RETURN to Step T. ____

6.3 SECURE SDC, START RCPs AND ENTER MODE 4 (Continued) **INITIALS**

> **NOTE**
> Steps that prepare the starting of a RCP may be performed **PER** OI-1A concurrently while stopping a RCP to ensure the RCP is started within 5 minutes of securing a RCP.

V. **IF** desired to shift a RCP in a loop,
THEN PERFORM the following:

1. **ENSURE** RCS pressure and temperature are within the limitations of FIGURE 3. ____

2. **STOP** ONE of the running RCPs **PER** OI-1A. ____

3. **START** the RCP which was initially secured in the same loop **PER** OI-1A. ____

W. **WHEN** two (2) RCPs are running satisfactorily,
THEN PERFORM the following while continuing with this procedure:

- **PLACE** the MPT ENABLE HS, HS-1406 and HS-1408, in the VARIABLE MPT ENABLE position. ____

  - **VERIFY** SPDS screen, RCS PRESSURE & INVENTORY, page 3, RCS Pressure/Temperature Curve, shifts to the VARIABLE SETPOINT LTOP curve. ____

- **COMMENCE** reading RCS temperature using Cold Leg indication for the loop with RCPs running. **[B0064]** ____

- **SECURE** the SDC alignment **PER** OI-3B, Section SECURING SDC. ____

- **NOTIFY** Plant Chemistry to sample RCS to ensure adequate boron concentration due to RCS mixing. **[B0270][B0271][B0605]** ____

> **CAUTION**
> - Do **NOT** exceed the following RCS heatup rates:
>
> | RCS Temperature | Maximum Heatup Rate |
> |---|---|
> | 70° F to 246° F | 80° F per hour |
> | Greater than 246° F | 100° F per hour |
>
> - Do **NOT** exceed a Pressurizer linear heatup rate of 100° F per hour.

X. **ESTABLISH** an RCS heatup, consistent with the P/T limits of FIGURE 3.

- **RECORD** heatup data in APPENDIX 1 and APPENDIX 2. ____ 02800

6.3 SECURE SDC, START RCPs AND ENTER MODE 4 (Continued) **INITIALS**

NOTE
Actual S/G level may be determined by comparing remote indicated level to FIGURE 5.

CAUTION
Severe water hammer may result if RCS temperature is greater than 200° F and Main Feedwater flow is restored after it has been stopped for greater than 80 minutes. To prevent water hammer in the Main Feed Ring (MFR), Main Feed gooseneck purge shall be performed to restore Main Feedwater flow.

Y. **MAINTAIN** S/G level between (-)40 and (+)60 inches actual level as follows:

1. **IF** Condensate selected as the S/G feedwater source, **THEN RAISE** level as follows: ____

   a. **START** a COND BSTR PP **PER** OI-11A. ____

   b. **PLACE** the Feedwater Regulating System in AUTO per OI-12A, section titled FEEDWATER REGULATING SYSTEM STARTUP. ____

2. **IF** AFW selected as the S/G feedwater source, **THEN INITIATE** AFW **PER** OI-32A, if not already running. ____

3. **LOG** initiation of feedwater in the Transient Tracking Log. ____

4. **LOWER** level as necessary, for the duration of this procedure, using one or a combination of the following methods:

   - Lowering the feed rate ____
   - Temporarily isolating the feedwater source and steaming the S/G ____
   - Initiating **OR** raising Blowdown flow **PER** OI-8A ____

Z. **ENSURE** the MODE 4 checklist is completed satisfactorily prior to exceeding 200° F. ____

6.3 SECURE SDC, START RCPs AND ENTER MODE 4 (Continued) **INITIALS**

> **CAUTION**
> Do **NOT** exceed the MAX OPERATING PRESSURE CURVE.

AA. **CONTINUE** HEATUP of the RCS to 200° F (as read on TI-112C **OR** 122C as applicable) and enter Mode 4: **[B0599]** ____

- **RECORD** date/time of Mode 4 entry:_____/_____ ____
- **LOG** Mode 4 entry in the CRO Log. ____

AB. Prior to exceeding Tave of 250° F (as read on TI-112C **OR** 122C as applicable), **VERIFY** Plant Chemistry has determined the RCS dissolve O_2 is less than 100 ppb. (TRM 15.4.1) **[B0599]** ____

> **CAUTION**
> Do **NOT** raise RCS temperature to or greater than 300° F unless specifically directed to do so by this procedure.

AC. **CONTINUE** HEATUP of the RCS to a maximum of 290° F. ____

AD. **ENSURE** the following SIT parameters are in the specified range:

- Boron concentration between 2450 and 2700 ppm ____
- Level between 187 and 199 inches ____
- Pressure between 200 and 225 PSIG ____

****** END ******

6.4 PREPARE SYSTEMS FOR MODE 3

A. Requisite section completed: 6.3, SECURE SDC, START RCPs AND ENTER MODE 4. ____

NOTE
Major steps (B, C, D...) in this section may be performed concurrently or in any order.

B. **INITIATE** completion of OP-6, Section 6.3. ____

C. **ENSURE** PAMS is in service and operable **PER** OI-1I. ____

D. **IF** required for S/G Chemistry control **AND NOT** in service, **THEN PLACE** S/G Blowdown in service **PER** OI-8A. ____

E. **IF** AFW is being used to maintain S/G levels **AND** the Condensate system and Feedwater header are available, **THEN PERFORM** the following:

1. **OPEN** 21 SG FW ISOL, 2-FW-4516-MOV. ____
2. **OPEN** 22 SG FW ISOL, 2-FW-4517-MOV. ____
3. **START** a COND BSTR PP **PER** OI-11A. ____
4. **PLACE** the Feedwater Regulating System in AUTO **PER** OI-12A, section titled, FEEDWATER REGULATING SYSTEM STARTUP. ____
5. **LOG** the initiation of Main Feedwater flow in the Transient Tracking Log. ____
6. **SECURE** AFW **PER** OI-32A. ____

F. **IF** 21 or 22 AFW PP is feeding the S/Gs **THEN ENSURE** 23 AFW PP is aligned for auto actuation:

- 23 AFW PP is shutdown **AND** handswitch, 2-HS-4540 in AUTO ____
- SG AFW BLOCK valves open in AUTO ____
- **ALL** Motor Driven Train Flow Indicating Controllers are set at 150 GPM. ____

6.4 PREPARE SYSTEMS FOR MODE 3 (Continued)

G. **IF** 23 AFW PP is feeding the S/Gs
THEN ENSURE 21 or 22 AFW PP is aligned for auto actuation:

- 21 SG AFW STM SUPP & BYP, 2-MS-4070-CV, is SHUT **AND** 2-HS-4070 in AUTO ____
- 22 SG AFW STM SUPP & BYP, 2-MS-4071-CV, is SHUT **AND** 2-HS-4071 in AUTO ____
- SG AFW BLOCK valves open in AUTO ____
- **ALL** Steam Train Flow Indicating Controllers are set at 150 GPM. ____
- **ALL** AFW PP Speed Controllers set at 5% ____

H. **WHEN** or **IF** the AFW system is secured,
THEN ENSURE the AFW System is aligned ready for automatic operation with:

- 21 SG AFW STM SUPP & BYP, 2-MS-4070-CV, is SHUT **AND** 2-HS-4070 in AUTO ____
- 22 SG AFW STM SUPP & BYP, 2-MS-4071-CV, is SHUT **AND** 2-HS-4071 in AUTO ____
- 23 AFW PP is shutdown **AND** handswitch, 2-HS-4540 in AUTO ____
- SG AFW BLOCK valves open in AUTO ____
- **ALL** Flow Indicating Controllers are set at 150 GPM. ____
- **ALL** AFW PP Speed Controllers set at 5% ____

I. **REQUEST** Chemistry to sample the WGST for O_2 concentration. ____

NOTE
Switches are located inside the 2nd cabinet door from the top of each cabinet section/stack, 3 thru 17.

J. **IF** starting up from an extended outage,
THEN Secure the CEDM Coil Power Programmer cabinet heaters and start the cabinet fans:

1. Place the Cabinet heater switch to OFF. ____
2. Place the Cabinet fan switch to ON. ____
3. Repeat until all Cabinets are complete, Cabinets 3-17. ____

6.4 PREPARE SYSTEMS FOR MODE 3 (Continued)

K. **IF** a vacuum exists in the Condenser,
THEN ENSURE SHUT the CAR Condenser Shell Stop to any condenser half shell that does **NOT** have a Circulating Water Pump running:

- 21A COND SHELL STOP, 2-CAR-101 ____
- 21B COND SHELL STOP, 2-CAR-102 ____
- 22A COND SHELL STOP, 2-CAR-103 ____
- 22B COND SHELL STOP, 2-CAR-104 ____
- 23A COND SHELL STOP, 2-CAR 105 ____
- 23B COND SHELL STOP, 2-CAR-106 ____

****** END ******

6.5 ENTER MODE 3 AND HEATUP TO 375° F

A. Requisite section completed: 6.4, PREPARE SYSTEMS FOR MODE 3. ____

NOTE
This section requires operator actions inside Containment to check open the SIT Outlet MOVs.

B. **ENSURE** the following:

- OP-6, Section 6.3 complete. ____
- RCS and S/G chemistry parameters are within specification. ____
- CEDM Cooling fans available. ____
- Cavity Cooling System available. ____
- SIT Outlet MOVs checked open within 12 hours prior to Mode 3 entry **PER** FIGURE 6 **AND** documented in the CRO Log. **[B0164]** ____
- **RECORD** date/time SIT Outlet MOVs checked:_____/_____

CAUTION

- RCS dissolved O_2 concentration shall be less than 100 ppb when RCS temperature is greater than 250° F.
- Do **NOT** exceed the following RCS heatup rates:

RCS Temperature	Maximum Heatup Rate
70° F to 246° F	80° F per hour
Greater than 246° F	100° F per hour

- Do **NOT** exceed a Pressurizer linear heatup rate of 100° F per hour.

C. **ESTABLISH** an RCS heatup, consistent with the P/T limits of FIGURE 3. ____

1. **RECORD** heatup data in APPENDIX 1 and APPENDIX 2. ____

D. **WHEN** RCS temperature reaches 300° F, (as read on TI-112C **OR** 122C as applicable)
THEN:

- **RECORD** date/time of Mode 3:_____/_____
- **LOG** mode 3 entry in the CRO Log. ____
- **START** the CEDM Cooling Fans **PER** OI-5C. ____
- **PLACE** the Cavity Cooling System in service **PER** OI-5A. ____

6.5 ENTER MODE 3 AND HEATUP TO 375° F (Continued)

CAUTION
Do **NOT** heatup the RCS to greater than 325° F without the HPSI system aligned for automatic operation.

E. **WHEN** RCS temperature is greater than 301° F (as read on TI-112C **OR** 122C as applicable),
THEN PERFORM the following: **[B0064]**

1. **RETURN** both PORVs to normal by placing their handswitches in NORMAL:
   - 2-RC-402-ERV.....2-HS-1406 ____
   - 2-RC-404-ERV.....2-HS-1408 ____
2. **ENSURE** the PORV Override Shut/Auto handswitches are in AUTO:
   - 2-RC-402-ERV.....2-HS-1402 ____
   - 2-RC-404-ERV.....2-HS-1404 ____
3. **CLEAR** the HPSI LTOP tagout **AND ALIGN** HPSI system to the following configuration:
   a. HPSI pump discharge valves locked open:
      - 21 HPSI PP DISCH ISOL...2-SI-428 ____
      - 22 HPSI PP DISCH ISOL...2-SI-415 ____
      - 23 HPSI PP DISCH ISOL...2-SI-406 ____

   b. HPSI pump breakers RACKED IN **PER** OI-27D:
      - 21 HPSI pump.....152-2108 ____
      - 22 HPSI pump.....152-2408 ____
      - 23 HPSI pump.....152-2110 ____
      - 23 HPSI pump.....152-2410 ____

   c. 21 HPSI PP in AUTO. ____

   d. 23 HPSI PP in AUTO. ____

   e. 22 HPSI PP in PULL TO LOCK. ____

   f. HPSI MAIN HEADER ISOL, 2-SI-654-MOV open. ____

   g. HPSI AUX HEADER ISOL, 2-SI-656-MOV open. ____

6.5.E.3 ENTER MODE 3 AND HEATUP TO 375° F (Continued)

h. HPSI HDR valves in AUTO:

MAIN HPSI HDR	AUX HPSI HDR
2-SI-616-MOV	2-SI-617-MOV
2-SI-626-MOV	2-SI-627-MOV
2-SI-636-MOV	2-SI-637-MOV
2-SI-646-MOV	2-SI-647-MOV

____

i. SI TO CHG HDR, 2-CVC-269-MOV, shut. ____

F. **WHEN** the RCS temperature is greater than 308° F (as read on TI-112C **OR** 122C as applicable),
THEN START the remaining RCP(s) **PER** OI-1A. ____

- **COMMENCE** reading RCS temperature using 21 **OR** 22 RCS Cold Leg indication (TI-112C **OR** TI-122C).

> **NOTE**
> PORV leakage and the results of attempts to reseat shall be documented via a Condition Report **PER** QL-2-100.

G. **IF** at any time PORV leakage is indicated,
THEN PERFORM the following:
(N/A if NO PORV leakage is indicated)

1. **NOTIFY** the System Engineer. ____

2. **IDENTIFY** the leaking valve. ____

3. With Shift Managers concurrence, **ATTEMPT** to **RESEAT** the PORV. **[B0894]** ____

   a. **ENSURE** RCS pressure is between 500 and 600 PSIA. ____

   b. **ENSURE** RCS Temperature is less than 360° F. ____

   c. **ENSURE EITHER** 4 RCPs operating **OR** 2 RCPs operating in the same loop. ____

   d. **VERIFY** the associated PORV BLOCK valve is available to isolate the leaking PORV: ____

      - 2-RC-403-MOV
      - 2-RC-405-MOV

6.5.G.3 ENTER MODE 3 AND HEATUP TO 375° F (Continued)

e. **VERIFY** Quench Tank parameters are normal:

- Quench Tank temperature is less than 120° F. ____
- Quench Tank pressure is approximately 3 PSIG. ____
- Quench Tank level is approximately 28.5 inches. ____

f. **VERIFY** the Pressurizer Spray Valves are shut:

- 2-RC-100E-CV ____
- 2-RC-100F-CV ____
- 2-CVC-517-CV ____

CAUTION

- Due to the long stroke time on the PORV BLOCK valve, the operator shall be prepared to shut the PORV BLOCK valve if the PORV fails to shut **PER** step G.3.k.
- To prevent challenging the Quench Tank rupture disk, steps G.3.g through G.3.i should be performed in less than 3 seconds.

g. **PLACE** the associated PORV OVERRIDE handswitch in MANUAL OPEN: ____

- 2-HS-1402
- 2-HS-1404

h. **VERIFY** the PORV opens. ____

i. **RETURN** the PORV OVERRIDE handswitch to AUTO: ____

- 2-HS-1402
- 2-HS-1404

j. **VERIFY** the PORV shuts. ____

k. **IF** the PORV fails to shut,
THEN SHUT the associated PORV BLOCK valve: ____

- 2-RC-403-MOV
- 2-RC-405-MOV

l. **DETERMINE** if PORV leakage has stopped. ____

6.5.G ENTER MODE 3 AND HEATUP TO 375° F (Continued)

4. **IF** PORV leakage still exists,
   THEN DETERMINE course of action by considering the following:
   (N/A if PORV leakage has stopped) ____

   - **REPEAT** step G.3.
   - **COOLDOWN** for repairs.
   - **WHEN** RCS temperature is greater than 301° F,
     THEN SHUT the associated PORV BLOCK valve:
     - 2-RC-403-MOV
     - 2-RC-405-MOV

5. **NOTIFY** the electric shop to check the thermal overloads are **NOT** tripped on the PORV that was cycled. **[B0034]** ____ 02800

****** END ******

6.6 CONTINUE RCS HEATUP TO 2250 PSIA AND 532° F **INITIALS**

A. Requisiste section completed: 6.5, ENTER MODE 3 AND HEATUP TO 375° F ____

B. **IF** exiting a refueling outage,
THEN CONTACT the CVCS System Manager, **AND DETERMINE** which Letdown Control Valves should be in service for the operating cycle.
(Check-mark recommended CV's) ____ 02800

- ☐ L/D CV, 2-CVC-110P
- ☐ L/D CV, 2-CVC-110Q
- ☐ L/D BACK PRESS REG, 2-CVC-201P
- ☐ L/D BACK PRESS REG, 2-CVC-201Q

NOTE
This section requires operator actions inside Containment to throttle the Pressurizer Spray Valve bypass valves.

CAUTION
Do **NOT** exceed an RCS heatup rate of 100° F per hour **OR** a Pressurizer linear heatup rate of 100° F per hour.

C. **ESTABLISH** an RCS heatup rate of less than 100° F per hour utilizing the pre-determined S/G heat removal method(s) **AND** consistent with the P/T limits of FIGURE 4, RCS P/T LIMITS - 4 RCPs RUNNING.
[B0598] ____

1. **IF** necessary to raise the heatup rate,
THEN SHUT the MSIVs. ____

2. **RECORD** heatup data in APPENDIX 1 and APPENDIX 2. ____

D. **IF** the feedwater source is the Condensate system **AND** condenser vacuum is established,
THEN when deemed appropriate by the CRS, **PERFORM** the following while continuing with this section:

1. **START** additional COND PPs to support feedwater flow rates. ____

2. **PLACE** a Steam Generator Feed Pump in service **PER** OI-12A. ____

6.6 CONTINUE RCS HEATUP TO 2250 PSIA AND 532° F (Continued) **INITIALS**

> **CAUTION**
> Minimize RCP operation with RCS pressures between 1000 and 1300 PSIA. Excessive RCP seal wear can occur during prolonged operation in this region due to the RCP shaft moving axially between the upper and lower thrust bearings.

E. **WHEN** RCS pressure reaches 1000 PSIA,
THEN PERFORM the following:

1. **ENSURE ONE** Letdown Control Valve **AND ONE** Letdown Backpressure Control Valve isolated as follows:

   a. **PLACE** L/D CONTR VLVS Selector Switch, 2-HS-110-1, in 110P **OR** 110Q. ____

   b. **SHUT** the L/D CV INLET valve for the CV out of service:

   - (2-CVC-110P-CV) L/D CV INLET.....2-CVC-105 ____
   - (2-CVC-110Q-CV) L/D CV INLET.....2-CVC-103 ____

   c. **PLACE** BACKPRESSURE REG VLVS selector switch, 2-HS-201, in 201P **OR** 201Q. ____

   d. **SHUT** the BP REG INLET valve for the CV out of service:

   - (2-CVC-201P-CV) BP REG INLET.....2-CVC-108 ____
   - (2-CVC-201Q-CV) BP REG INLET.....2-CVC-110 ____

2. Slowly **ADJUST** L/D PRESS controller, 2-PIC-201, setpoint to 460 PSIG in AUTO. ____ 02800

> **NOTE**
> Due to the tolerances on the SG Low Pressure Bypass circuitry and SG Low Pressure Trip reset setpoints, a valid trip may be generated if the TCBs are closed between 700 and 770 PSIA S/G pressure.

F. **VERIFY** Reactor Trip Circuit Breakers 1 through 8 are open prior to S/G pressure reaching 700 PSIA. **[B0887]** ____

G. **WHEN** S/G pressure is between 703 and 767 PSIA as read on PI-1013A through D,
THEN ENSURE ALL SGIS Sensor Modules are reset. ____ 02800

6.6 CONTINUE RCS HEATUP TO 2250 PSIA AND 532° F (Continued) **INITIALS**

H. **WHEN** S/G pressure reaches 785 PSIA (RCS temperature of 516° F), **THEN** perform the following:

1. **CHECK** the following automatic actions occur: (Tech Spec 3.3.4, Table 3.3.4-1, Note (d))

   - 2C03 "SGIS A BLOCK PERMITTED" **AND** "SGIS B BLOCK PERMITTED" annunciators clear. ____
   - 2C03 "SGIS A BLOCKED" **AND** "SGIS B BLOCKED" annunciators clear. ____
   - RPS Low Steam Generator Pressure Trip Circuit Bypass resets. ____

2. **ENSURE** the RPS Low Steam Generator Pressure Trip Circuit Bypass keys are removed. ____

NOTE

- When RCS pressure is less than 1550 PSIA, pressure shall be read using the higher of PI-103 or PI-103-1 **OR** read PI-105A.
- When RCS pressure is greater than 1550 PSIA, pressure shall be read using PIC-100X **OR** PIC-100Y **OR** PI-105A.

I. **WHEN** RCS pressure reaches 1600 PSIA, **THEN PERFORM** the following:

1. **ENSURE** PZR PRESS CONTR 2-PIC-100X and 2-PIC-100Y are in AUTO with a setpoint of 1900 PSIA. ____
2. **ENSURE** the desired number of Pressurizer Heaters are in the AUTO and ON positions. ____
3. **SHIFT** PZR SPRAY VLV CONTR, 2-HIC-100, to AUTO. ____
4. **ENSURE** all available Charging Pumps are prepared for operation with the RCS pressure greater than 1600 PSIA, **PER** OI-2A, section PRESSURIZING CHARGING PUMP SUCTION STABILIZERS AND DISCHARGE DESURGERS. ____ 02800

6.6 CONTINUE RCS HEATUP TO 2250 PSIA AND 532° F (Continued) **INITIALS**

J. **WITHIN** 12 hours prior to raising RCS pressure to 1750 PSIA, **ENSURE** the following:

- SDC Flow Control valve, 2-SI-306-CV, locally verified to be open **PER** FIGURE 7 **AND** documented in the CRO Log. **[B0164]** ____
- **RECORD** date/time 2-SI-306-CV checked:_____/_____ ____
- Two LPSI pumps are operable ____
- Each ECCS subsystem has an operable flow path from the RWT which will transfer suction to the Containment Emergency Sump on RAS ____
- Both Containment Spray pumps are operable ____
- Each Containment Spray subsystem is capable of taking a suction from the RWT on CSAS and SIAS ____
- Each Containment Spray subsystem is capable of automatically transferring suction to the Containment Emergency Sump on RAS. ____

K. **WHEN** RCS pressure is between 1740 and 1775 PSIA as read on PI-102A through D,
THEN ENSURE ALL SIAS Pressurizer Pressure (PP) Sensor Modules are reset. ____

L. **WHEN** RCS pressure is between 1785 and 1800 PSIA as read on PI-102A through D,
THEN CHECK the following automatic actions occur: (Tech Spec 3.3.4, Table 3.3.4-1, Note (a))

- 2C08 "PZR PRESS BLOCK A PERMITTED" **AND** "PZR PRESS BLOCK B PERMITTED" annunciators clear. ____
- 2C08 "PRESSURIZER PRESSURE BLOCK A" **AND** "PRESSURIZER PRESSURE BLOCK B" annunciators clear. ____

6.6 CONTINUE RCS HEATUP TO 2250 PSIA AND 532° F (Continued) **INITIALS**

M. **WHEN** RCS pressure reaches 1900 PSIA,
THEN: **[B0340]**

> **NOTE**
> Soak pressure is a value significantly below Pressurizer Safety Valve lift setpoint yet close to Presurizer normal operating temperature.

1. **SOAK** at 1900 PSIA or another pressure as determined by System Engineering for at least three hours. ____

2. **AFTER** soaking the PZR for at least three hours,
THEN:

   a. **ADJUST** the PZR PRESS CONT 2-PIC-100X and 2-PIC-100Y setpoint to 2250 PSIA. ____

   b. **ADJUST** the number of PZR heaters that are either in the ON or AUTO position to **RAISE** RCS pressure to 2250 PSIA over a two hour period. ____

> **CAUTION**
> Rapid adjustment of Pressurizer Level Controllers will cause L/D flow to rise excessively.

N. **WHEN** RCS pressure reaches 2250 PSIA,
THEN SHIFT both pressurizer level controllers, 2-LIC-110X **AND** 2-LIC-110Y to Auto-Remote-Setpoint operation.

- **WHEN** pressurizer level reaches 160 inches,
THEN: ____

  1. **STABILIZE** pressurizer level at approximately 160 inches. ____

  2. **PLACE** 2-LIC-110X in MANUAL. ____

  3. **SHIFT** 2-LIC-110X to REMOTE-SETPOINT. ____

  4. **VERIFY** the REMOTE-SETPOINT is 160 inches. ____

  5. **SHIFT** 2-LIC-110X to AUTO. ____

  6. **VERIFY** 2-LIC-110X is in Auto-Remote as indicated by an "AR" in the lower right side of the controller. ____

  7. **PLACE** 2-LIC-110Y in MANUAL. ____

  8. **SHIFT** 2-LIC-110Y to REMOTE-SETPOINT. ____

  9. **VERIFY** the REMOTE-SETPOINT is 160 inches. ____

6.6.N CONTINUE RCS HEATUP TO 2250 PSIA AND 532° F (Continued) **INITIALS**

10. **SHIFT** 2-LIC-110Y to AUTO. ____

11. **VERIFY** 2-LIC-110Y is in Auto-Remote as indicated by an "AR" in the lower right side of the controller. ____

O. **MAINTAIN** RCS temperature between 530° F and 534° F utilizing: **[B0598]**

- Atmospheric Dump valves, with ADV CONTR 2-HIC-4056, in MANUAL ____
- Main Steam Line drains:
  - DR-5 ORIF BYP.....2-MS-6603-MOV ____
  - DR-6 ORIF BYP.....2-MS-6604-MOV ____
- Turbine Bypass Valves with the MSIVs open

1. **IF** the MSIVs are shut,
   THEN PERFORM the following:

   a. **CLOSE** the power supply breakers to the MSIV Bypass valves:
      - MAIN STEAM VALVE 21 BYPASS 2-MOV-4045, 52-21428 ____
      - MAIN STEAM VALVE 22 BYPASS 2-MOV-4052, 52-20428 ____

   b. **OPEN** the MSIV bypass valves to start warming the Main Steam headers:
      - 21 MSIV BYP, 2-MS-4045-MOV ____
      - 22 MSIV BYP, 2-MS-4052-MOV ____

   c. **CYCLE** MS UPSTREAM DRN VLVS, 2-HS-6622, as necessary to prevent excessive blowdown of the Main Steam header. ____

   d. **CHECK** Main Steam header pressure stabilized within 100 PSID of Steam Generator pressure.
      - **IF** necessary to lower the ΔP across the MSIVs, **THEN SHUT** selected High Pressure Drains until the ΔP is within 100 PSID. ____

   e. **OPEN** 21 and 22 MSIVs:
      - 21 MSIV, 2-MS-4043-CV ____
      - 22 MSIV, 2-MS-4048-CV ____

6.6.O.3 CONTINUE RCS HEATUP TO 2250 PSIA AND 532° F (Continued) **INITIALS**

f. **SHUT** 21 and 22 MSIV Bypass valves:

- 21 MSIV BYP, 2-MS-4045-MOV ____
- 22 MSIV BYP, 2-MS-4052-MOV ____

g. **OPEN** the power supply breakers to the MSIV Bypass valves: **[B0350]**

- MAIN STEAM VALVE 21 BYPASS 2-MOV-4045, 52-21428 ____
- MAIN STEAM VALVE 22 BYPASS 2-MOV-4052, 52-20428 ____

P. **IF** the MSIVs are open,
THEN ENSURE the High Pressure Steam Drains are aligned to the NORMAL OPERATING position **PER** OI-8C, MAIN STEAM AND MSR VENTS AND DRAINS. ____

Q. **LOG** termination of Pressurizer/RCS heatup in the Transient Tracking Log. ____

R. **ENSURE** Pressurizer Spray Valve Bypass Valves are throttled open **PER** OI-1H. ____

1. **RECORD** turns open:

- 2-RC-100E-CV BYP THR, 2-RC-219 _____ ____
- 2-RC-100F-CV BYP THR, 2-RC-220 _____ ____

S. **IF** starting up from Mode 5 where a Pressurizer bubble was maintained,
THEN INITIATE Pressurizer Spray to equalize Pressurizer and RCS boron concentration as follows:

1. **ENERGIZE ALL** Pressurizer Backup Heater Banks. ____

2. **ADJUST** the setpoint of the selected PZR PRESS CONTR 2-PIC-100X or 2-PIC-100Y, to maintain Pressurizer pressure at 2250 PSIA. ____

T. **PERFORM** a channel check of the S/G Wide Range Level indicators **PER** STP O-63-2. **[B0062]** ____

U. **NOTIFY** Chemistry to sample Safety Injection Tanks for Boron Concentration. ____

****** END ******

7.0 POST PERFORMANCE ACTIVITIES

A. Upon completion of this procedure, perform the following:

- Forward the original to the Operations Senior Administrative Assistant for retention **PER** CNG-PR-3.01-1000
- Attach copies of the RCS and Pressurizer Heatup Logs to the Transient Tracking Log (Ref. EN-1-115)

8.0 BASES

[B0015] Delineates criteria for determining S/G availability.

[B0034] POSRC, LER 90-11; to have the Electric Shop check the PORVs overloads if the PORVs lift.

[B0062] Establishes requirement to perform a channel check of S/G wide range level indicators when S/G level is on scale.

[B0064] LTOP requirements.

[B0066] Safety analysis that allows SDC Suction Isolation valve pressure interlocks to be defeated.

[B0067] Establishes requirement that the Quench Tank shall be below 4% O_2 prior to adding H_2 to the RCS.

[B0116] Establishes requirements for RCS heat removal capabilities during partial drain down conditions.

[B0138] NUMARC 91-06 "GUIDELINES FOR INDUSTRY ACTIONS TO ASSESS SHUTDOWN MANAGEMENT":

- Requires that criticality be anticipated whenever dilution, heatup or CEA withdrawals are occurring, based on industry events
- Requires that controls be established to preclude loss of RCS inventory

[B0164] Establishes requirement to check local position of SIT Outlet MOVs and SI-306-CV against a diagram, per SER Supplement 5, dated 8-10-76.

[B0203] To ensure the quantity of sodium tetraborate is sufficient to neutralize the cntmt sump water following a LOCI, the max RCS **[B]** shall be less than 2700 PPM prior to raising RCS temperature greater than 200° F.

[B0221] Allow diluting the RCS with S/D CEAs inserted as long as no RCS heatup is in progress.

[B0270] Operator Reactivity Management Procedure Review Guidelines. Letter from B.Shick to M.Navin 9-22-95.

8.0 BASES (Continued)

[B0271] This is in response to SOER 94-02, recommendation 4.a: Identify procedure activities that can result in low concentrated borated water being transported to the RCS.

[B0272] SOER 94-02, The requirement to keep an RCP running and PZR spray in operation while doing any RCS boration or dilution is to assure adequate RCS mixing to prevent diluted pockets. However, plant conditions are such that it is not always possible to assure that RCPs are running. In these cases it is possible to minimize the probability of diluted pockets during Natural Circulation cooldown or during SDC operation.

[B0340] Primary System Engineering recommends the following actions to prevent seat distortion of the primary RVs. Soak RCS at 1900 PSIA for at least three hours then raise RCS pressure to 2250 PSIA over a two hour period.

[B0350] Appendix R requirements to maintain breakers open to prevent maloperation.

[B0368] RCAR 96-10, recommended PTU augment the vibration monitoring for all normal RCP starts. (e.i. starting RCPs for heatup, sweeping S/Gs...)

[B0410] NEU (NEU 01-026) provided the maximum allowable temperature that the S/G can be colder than the RCS to prevent exceeding the max allowable cooldown rate.

[B0598] SOER 94-01, recommendation 2.b. Provide guidance for controlling reactor coolant system temperature when below no-load conditions.

[B0599] IR3-000-611 states TIA-115 and TIA-125 have instrument uncertainties greater than those accommodated for by the LTOP analysis. Therefore TI-112C and TI-122C, with instrument uncertainties acceptable by the LTOP analysis, SHALL be used for LTOP controls

[B0605] Memo from the boronometer removal task force that describes increased RCS boron sampling requirements due to the removal of the boronometer.

[B0719] Memo/Minutes from a meeting between Bonner, Bleacher and McCord, dated 10/15/02, discussing resolution guidelines to prevent Waterhammer of the Steam Generator Gooseneck. Memo G\PES\1102\1113-600 Dated Nov 13, 02 lists conditions for a steam void during plant startup.

[B0887] LER 03-002 resolution document. Ensure TCBs are open between 700 and 770 PSIA S/G pressure due to setpoint tolerances in Low S/G Pressure Bypass reset and S/G Low Pressure trip reset.

[B0894] ES200000837, Evaluate stroke testing PORVs.

8.0 BASES (Continued)

[B2547] RCS P/T and RCP Operation Curves.

9.0 RECORDS

Records generated by this procedure shall be transferred to Records Management **PER** CNG-PR-3.01-1000, Records Management.

RCS P/T LIMITS - 21A AND 21B RCPs RUNNING [B2547]

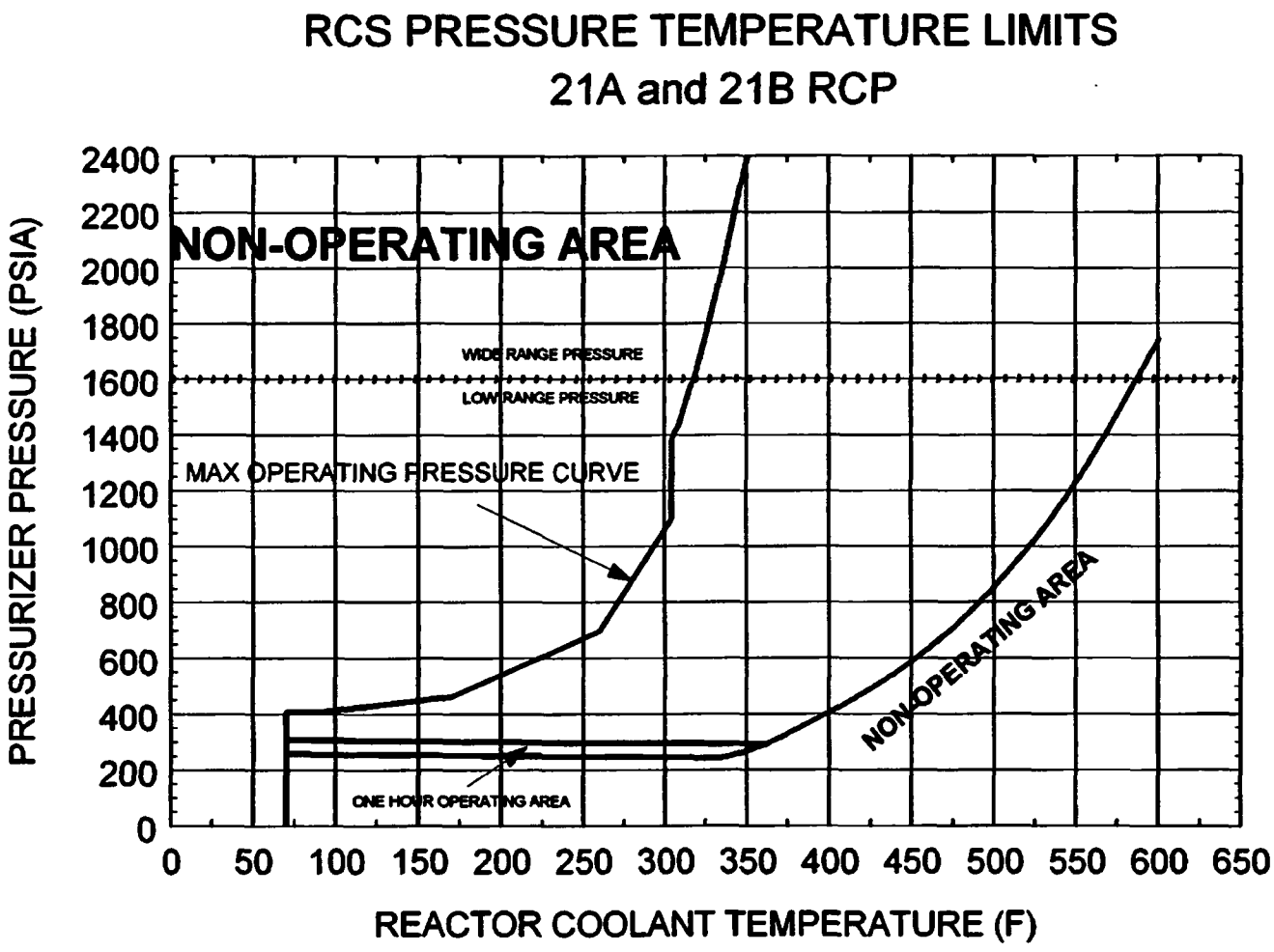

RCS P/T LIMITS - 22A AND 22B RCPs RUNNING [B2547]

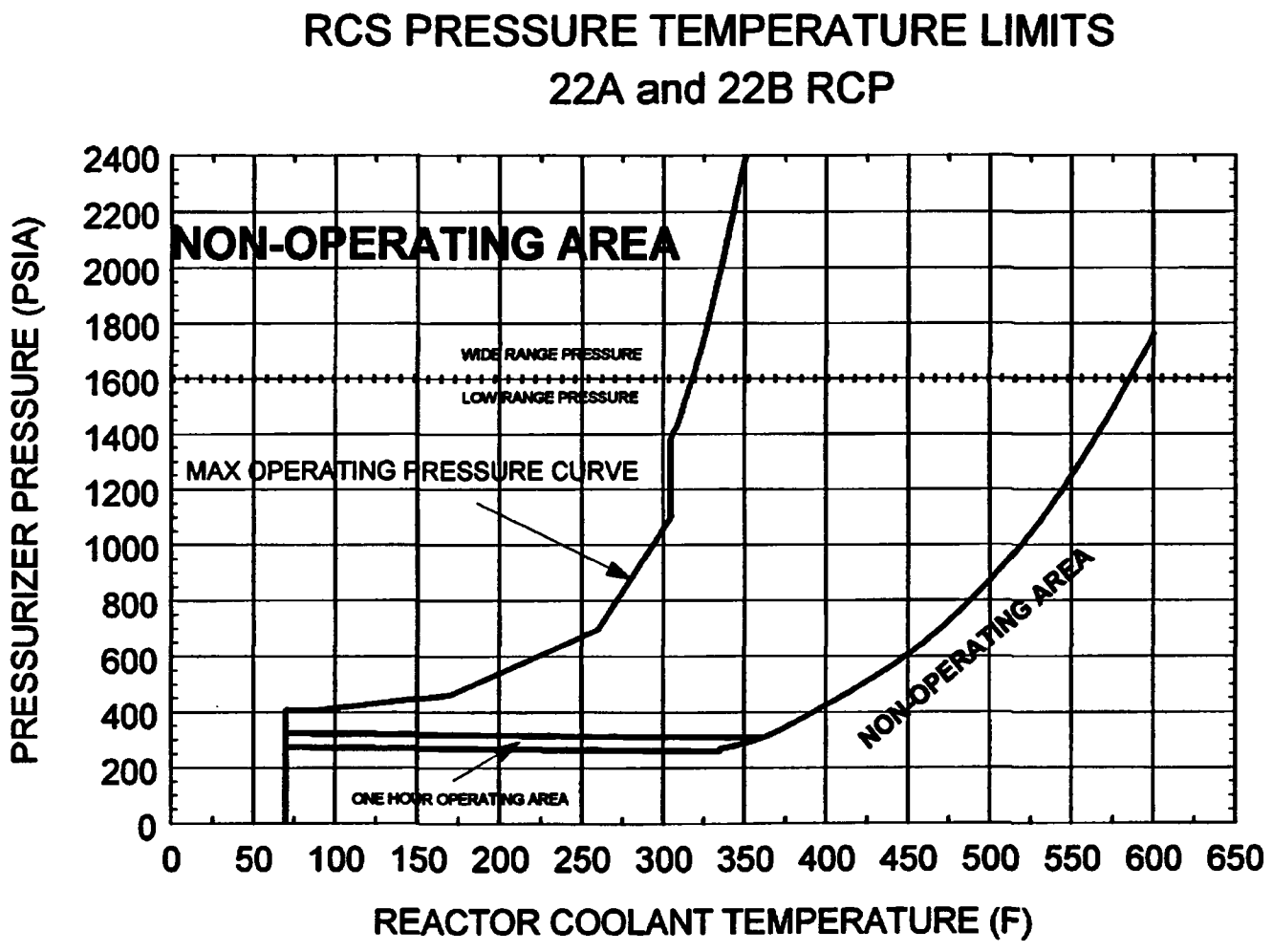

RCS P/T LIMITS - 21A or 21B AND 22A or 22B RCPs RUNNING
[B2547]

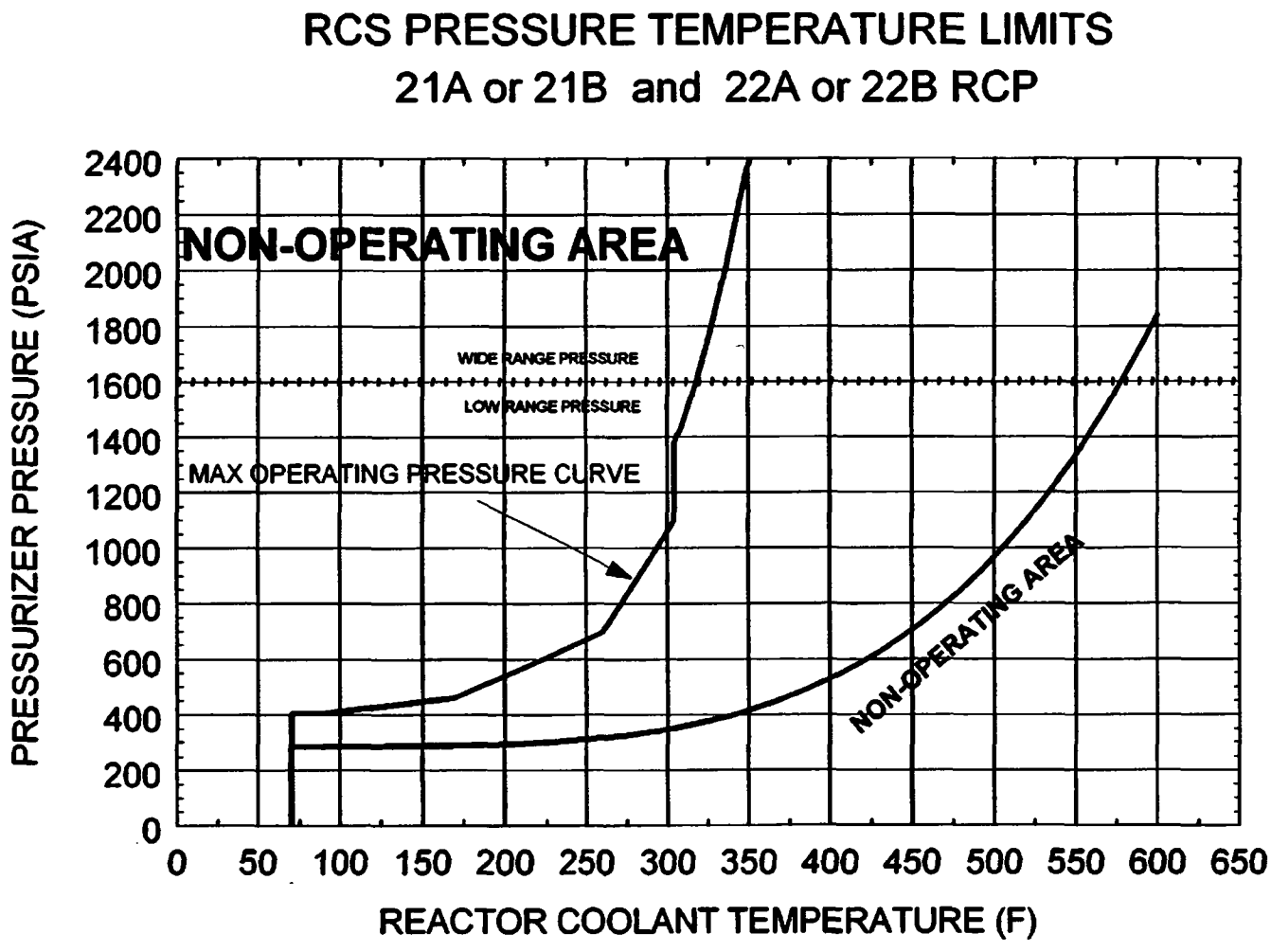

RCS P/T LIMITS - 4 RCPs RUNNING [B2547]

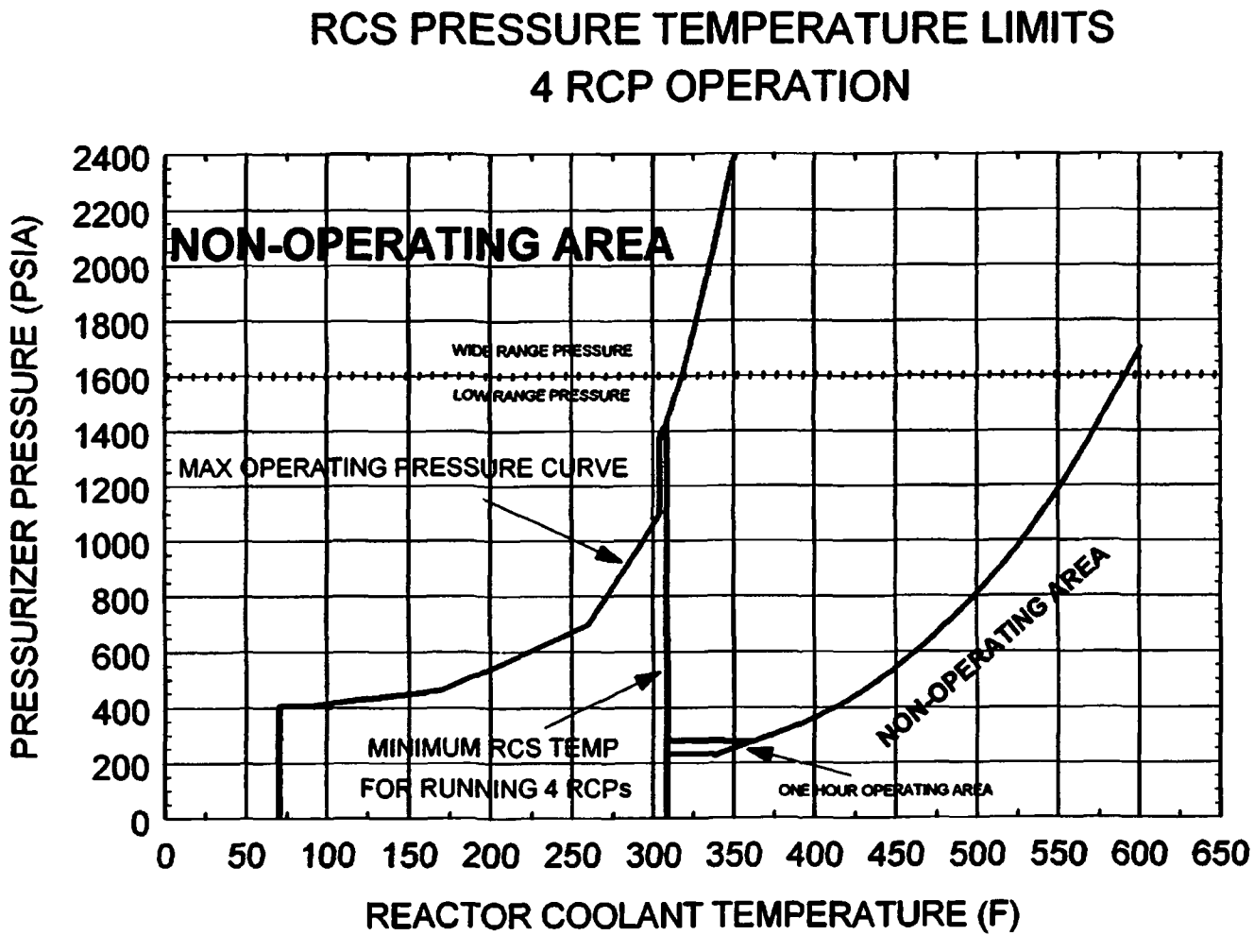

NARROW RANGE S/G LEVEL INDICATED vs ACTUAL

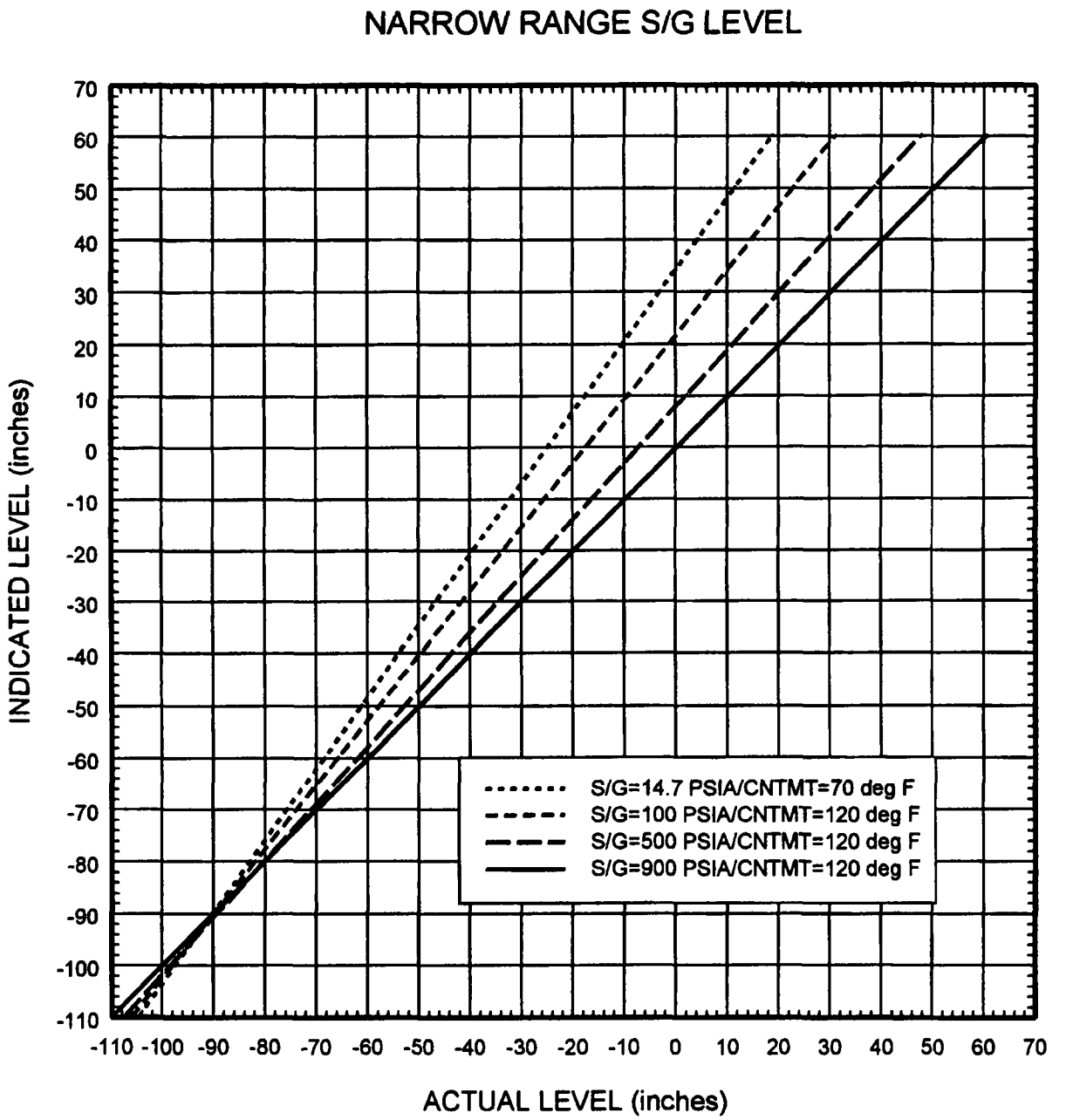

SIT OUTLET MOV POSITION INDICATION DIAGRAM

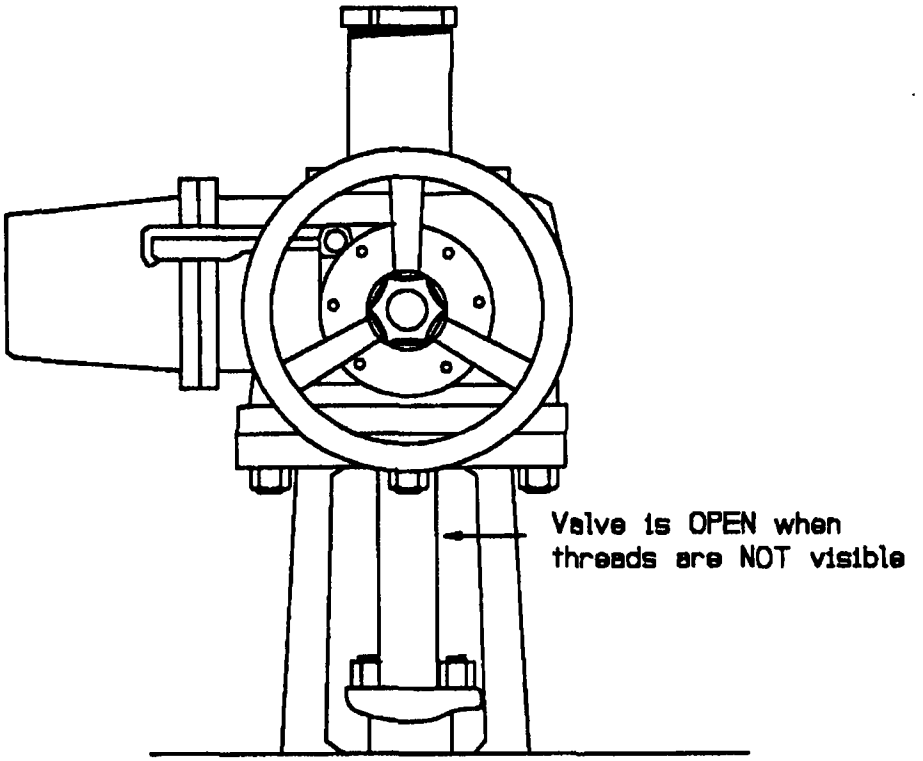

SDC FLOW CONTROL VALVE, 2-SI-306-CV, POSITION INDICATION DIAGRAM

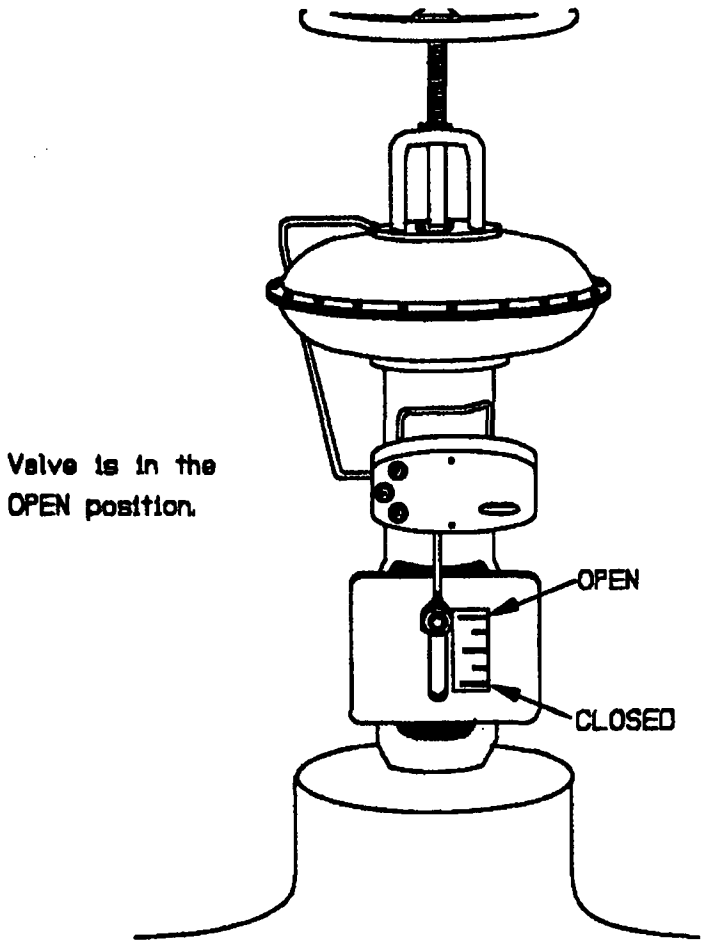

PRESSURIZER HEATUP LOG

PZR HEATUP NO. _____ DATE/TIME H/U STARTED_____

The heatup of the PZR is to be conducted at a linear rate **NOT** to exceed 100°F in any one hour period. PZR temperature should be recorded every 15 minutes and should **NOT** exceed 25°F in any 15 minute interval. The maximum step change in PZR temperature should **NOT** exceed 16.7°F. A soak period of 10 minutes should occur after each step change in temperature.

TIME	PZR PRESS (PSIA) (1)	PZR TEMP (°F) (2)	PZR SPRAY TEMP (°F) (3)	PZR H/U RATE (°F/HR)	PZR SPRAY DIFFERENTIAL TEMP (°F) (4)	INIT	CALC. CHECK INIT

Pressure and Temperature parameters may be read on the Control Board **OR** the Plant Computer

REVIEWED BY: _____
(SM or CRS)

[NOTES (1) - (4) ARE ON THE NEXT PAGE]

PRESSURIZER HEATUP LOG

(1) RCS Pressure:

Less Than 1550 PSIA: read the higher of PI-103 **OR** PI-103-1 **OR** read PI-105A

Greater Than 1550 PSIA: read PIC-100X **OR** PIC-100Y **OR** read PI-105A

(2) PZR Temperature: read TI-101

(3) Main Spray Temperature: read TIA-103 **OR** TIA-104

AUX Spray Temperature: read TI-229

(4) Maximum Spray ΔT is 400°F (Ref. TRM 15.4.2)

RCS HEATUP LOG

RCS HEATUP NO. _____ DATE/TIME H/U STARTED_____

RCS temperature shall be recorded every 15 minutes during heatup. A soak period of 10 minutes should occur after each step change in temperature. Reactor Vessel heatup limits are as follows:

RCS TEMPERATURE	H/U RATE LIMIT	15 MINUTE ΔT	STEP CHANGE ΔT
70°F to 246°F	80°F per hour	20°F	13.3°F
Greater than 246°F	100°F per hour	25°F	16.7°F

TIME	RCS(1) PRESS (PSIA)	RCS (2) TEMP (°F)	H/U RATE (°F/HR)	INIT	CALC. CHECK INIT	TIME	RCS(1) PRESS (PSIA)	RCS (2) TEMP (°F)	H/U RATE (°F/HR)	INIT	CALC. CHECK INIT

Pressure and Temperature parameters may be read on the Control Board **OR** the Plant Computer

REVIEWED BY: _____
(SM or CRS)

[NOTES (1) & (2) ARE ON THE NEXT PAGE]

RCS HEATUP LOG

(1) RCS Pressure:

Less Than 1550 PSIA: read the higher of PIC-103 **OR** PIC-103-1 **OR** read PI-105A

Greater Than 1550 PSIA: read PIC-100X **OR** PIC-100Y **OR** read PI-105A

(2) RCS Temperature: **Forced Flow:** read TI-112C **OR** TI-122C

Natural Circ: RCS Temp Greater than 358°F: read average of at least 2 CETs

RCS Temp Less than 358°F: read lowest valid displayed CET

SDC Flow: read TR-351

S/G LEVEL TRANSMITTERS PLACED IN SERVICE IN PREPARATION OF RCS HEATUP

A. This Appendix has been page checked against the LIST OF EFFECTIVE PAGES. **[M0002]**

____/_____
Init Date

B. I&C to ensure that the following instruments are in service with:

1. The instrument valves aligned.
2. The reference leg filled (if so equipped).
3. Entrained air vented from the instrument lines.

- **21 Steam Generator Level Transmitters:**
  - LT-1113A ____
  - LT-1113B ____
  - LT-1113C ____
  - LT-1113D ____
  - LT-1114A ____
  - LT-1114B ____
  - LT-1114C ____
  - LT-1114D ____
  - LT-1105 ____
  - LT-1111 ____

S/G LEVEL TRANSMITTERS PLACED IN SERVICE IN PREPARATION OF RCS HEATUP

- **22 Steam Generator Level Transmitters:**
  - LT-1123A ____
  - LT-1123B ____
  - LT-1123C ____
  - LT-1123D ____
  - LT-1124A ____
  - LT-1124B ____
  - LT-1124C ____
  - LT-1124D ____
  - LT-1106 ____
  - LT-1121 ____

C. This Appendix has been page checked against the LIST OF EFFECTIVE PAGES. **[M0002]**

____/_____
Init Date

INSTRUMENTS PLACED IN SERVICE AFTER FILLING THE RCS

A. This Appendix has been page checked against the LIST OF EFFECTIVE PAGES. **[M0002]**

____/_____
Init Date

B. I&C to ensure that the following instruments are in service with:

- The instrument valves aligned.
- The reference leg filled (if so equipped).
- Entrained air vented from the instrument lines.
  - FT-311 HPSI to Loop 21B ____
  - FT-321 HPSI to Loop 21A ____
  - FT-331 HPSI to Loop 22B ____
  - FT-341 HPSI to Loop 22A ____
  - PT-319 Safety Injection to Loop 21B ____
  - PT-329 Safety Injection to Loop 21A ____
  - PT-339 Safety Injection to Loop 22B ____
  - PT-349 Safety Injection to Loop 22A ____
  - PI-214X 21 Charging Pump Discharge ____
  - PI-214Y 22 Charging Pump Discharge ____
  - PI-214Z 23 Charging Pump Discharge ____
  - PT-212 Charging Pumps to regen HX ____
  - FT-212 Charging Pumps to regen HX ____
  - PDT-111A 21 Steam Generator ΔP ____
  - PDT-111B 21 Steam Generator ΔP ____
  - PDT-111C 21 Steam Generator ΔP ____
  - PDT-111D 21 Steam Generator ΔP ____
  - PDT-121A 22 Steam Generator ΔP ____

INSTRUMENTS PLACED IN SERVICE AFTER FILLING THE RCS

- PDT-121B 22 Steam Generator ΔP ____
- PDT-121C 22 Steam Generator ΔP ____
- PDT-121D 22 Steam Generator ΔP ____
- PT-100X PZR Pressure Txmr ____
- PT-100Y PZR Pressure Txmr ____
- PT-103 PZR Pressure Txmr ____
- PT-103-1 PZR Pressure Txmr ____
- PT-102A PZR Pressure Txmr ____
- PT-102B PZR Pressure Txmr ____
- PT-102C PZR Pressure Txmr ____
- PT-102D PZR Pressure Txmr ____
- PT-105A PZR Pressure Txmr ____
- PT-105B PZR Pressure Txmr ____
- LT-110X PZR Level Txmr ____
- LT-110Y PZR Level Txmr ____
- LT-103 PZR Level Txmr ____

C. This Appendix has been page checked against the LIST OF EFFECTIVE PAGES. **[M0002]**

____/____
Init Date

CALVERT CLIFFS NUCLEAR POWER PLANT

UNIT ONE

OP-2

PLANT STARTUP FROM HOT STANDBY TO MINIMUM LOAD

REVISION 46

SAFETY RELATED

REFERENCE USE

APPROVAL AUTHORITY: Kent Mills

Effective Date: 6/18/2010

LIST OF EFFECTIVE PAGES

PAGE NUMBER	REVISION
1-56	46
FIGURE	
1, PAGE 1	46
APPENDIX	
1, PAGE 1 2, PAGES 1-4	46
ATTACHMENT	
1, PAGES 1-2	46

PROCEDURE ALTERATIONS

PAGE NUMBER	REV/CHG
20,21,25,35,48	04601

TABLE OF CONTENTS

	TITLE	PAGE
1.0	PURPOSE	4
2.0	APPLICABILITY/SCOPE	4
3.0	REFERENCES AND DEFINITIONS	5
4.0	PREREQUISITES	7
5.0	PRECAUTIONS	10
6.0	PROCEDURE	12
6.1	QUICK TRIP RECOVERY	12
6.2	PREPARE SECONDARY SYSTEMS FOR STARTUP	14
6.3	PREPARE PRIMARY SYSTEMS FOR STARTUP	18
6.4	REFUELING OUTAGE STARTUP	20
6.5	WITHDRAW SHUTDOWN CEA GROUPS	21
6.6	WITHDRAW REGULATING CEA GROUPS ABOVE ZPDIL	25
6.7	TAKE THE REACTOR CRITICAL	32
6.8	MODE 1 PREPARATIONS	46
6.9	MODE 1 ENTRY	49
7.0	POST PERFORMANCE ACTIVITIES	54
8.0	BASES	54
9.0	RECORDS	55
10.0	ATTACHMENTS	55

1.0 PURPOSE

A. This procedure provides direction to take the Reactor critical (Mode 2) from Hot Standby (Mode 3), raising Reactor power to 5% (Mode 1) then escalating Reactor power to 15%.

2.0 APPLICABILITY/SCOPE

A. This procedure may be used to perform the following evolutions:

- Take the Reactor critical **AND** remain in Mode 2
- Take the Reactor critical **AND** escalate power to 5% and enter Mode 1

B. Steps in PSTP-2 prevent premature criticality below ZPDIL during the initial reactor startup after refueling

C. To prevent premature criticality below ZPDIL, this procedure directs a reactor startup other than the initial startup after refueling in the following sequence:

1. Ensure RCS boron concentration is at least at the ECC concentration.
2. Withdraw Shutdown Groups.
3. Withdraw Regulating Groups to 90 inches on Group 3.
4. If required, dilute RCS boron concentration to ECC concentration.
5. Withdraw Regulating Groups until the Reactor is critical.

D. Initial Reactor startup following a refueling outage is performed under the direction of the on-shift NFM Shift Engineer (NFM-SE) **PER** PSTP-2, INITIAL APPROACH TO CRITICALITY AND LOW POWER PHYSICS TESTING PROCEDURE **AND** ETP 99-15R, CEDM PERFORMANCE TESTING. **[B0404]**

E. Effective use of this procedure requires that Operations Management review plant status for system availability and out-of-service components that would impact plant startup by entering Technical Specification Action Statements or prohibit system operation. Operations management must determine that adequate equipment is available and that actions are in place to return to service those components needed later during the start-up.

2.0 APPLICABILITY/SCOPE (Continued)

F. This procedure shall be used as follows:

1. With the approval of the CRS or SM, two or more steps within a section may be performed concurrently **OR** out of order. The steps must be evaluated in the sequence listed **AND** be determined not to be dependent upon the actions of other steps within that section.

2. With the approval of the CRS or SM, a step may be delayed **OR** not performed if equipment availability prevents its immediate performance. The step must be evaluated in the sequence listed **AND** determined not to impact the performance of the startup by prohibiting integrated plant operation **OR** entry into Technical Specification Action Statements to which L.C.O. 3.0.4 applies.

3. When encountering a step whose actions have already been performed (e.g.; step says to start a pump and the pump is already running), equipment status shall be reviewed to ensure that existing conditions meet the intent of the step, and with the concurrence of the CRS or SM the step may be signed off.

4. Conditional steps (if, then) may be marked N/A if the condition does not exist or apply.

5. Steps with initial spaces shall be initialed when completed.

6. This procedure is used in conjunction with OP-6 in order to perform a plant start-up. System lineups in OP-6 shall be completed, or have GS-SO exemption, for the systems required to support startup as they are called upon in this procedure.

7. This procedure may be used in conjunction with OP-1 and OP-7 when performing a plant start-up. When OP-1 or OP-7 is the controlling document, performance of steps in this OP shall be evaluated by the CRS or SM.

3.0 REFERENCES AND DEFINITIONS

3.1 DEVELOPMENTAL REFERENCES

A. Technical Specifications

B. P&IDs

1. OM-72 (60-729E), REACTOR COOLANT SYSTEM

2. OM-73 (60-730E), CHEMICAL & VOLUME CONTROL SYSTEM

3. OM-74 (60-731E), SAFETY INJECTION & CONTAINMENT SPRAY SYSTEMS

3.2 PERFORMANCE REFERENCES

A. OI-2B, CVCS Boration, Dilution and Makeup Operations

B. OI-8A, Blowdown System

C. OI-8B, Feedwater Heater Vents and Drains

D. OI-8C, Main Steam and Moisture Separator Reheater Vents and Drains

E. OI-8D, Moisture Separator/Reheater Operation

F. OI-12A, Feedwater System

G. OI-13, Condenser Air Removal

H. OI-30, Nuclear Instrumentation

I. OI-32A, Auxiliary Feedwater System

J. OI-42, CEDM System Operation

K. OI-43A, Main Turbine and Generator/Exciter Operation

L. OP-6, Pre-Startup Checkoff

M. NEOP-302, Estimated Critical Condition

N. NEOP-13, Technical Data Book

O. CP-204, Specifications and Surveillance - Primary Systems

P. CP-217, Specifications and Surveillance - Secondary Chemistry

Q. NO-1-100, Conduct Of Operations

R. NO-1-200, Control of Shift Activities

S. NO-1-111, Post-Trip Review

T. STP O-6-1, RPS Startup Test

U. STP O-62-1, Monthly Valve Position Verification

V. STP O-94A-1, Coolant Loop Operability Verification (Mode 3)

W. PE 1-48-1-O-SA, Diverse Scram System Logic Test

X. PR-3-100, Records Management

Y. PSTP-2, INITIAL APPROACH TO CRITICALITY AND LOW POWER PHYSICS TESTING PROCEDURE.

Z. ETP 99-15R, CEDM PERFORMANCE TESTING

3.3 DEFINITIONS

A. ZPDIL: Zero Power Dependent Insertion Limit as stated in NEOP-13, Technical Data Book.

4.0 PREREQUISITES INITIALS

NOTE
The prerequisites of this section are **NOT** required to be completed prior to performing Section 6.2. The prerequisites are specifically for withdrawing CEA's and taking the Reactor critical.

A. **DETERMINE** the usage of this procedure as follows: (check one)

☐ **IF** this is a shutdown of less than 36 hours
OR
as determined by the GS-SO,
THEN PERFORM a **QUICK TRIP RECOVERY, AND** N/A Section 6.4.

☐ **IF** this startup follows a shutdown of greater than 36 hours, **AND** is **NOT** a refueling outage,
THEN PERFORM a **NORMAL PLANT STARTUP, AND** N/A Section 6.1 and 6.4.

NOTE
PSTP-2 will normally leave the reactor CRITICAL with ALL Regulating CEAs withdrawn. AT this point the operator will continue with OP-2 with Section 6.8, MODE 1 PREPARATIONS and N/A Section 6.6 and 6.7

☐ **IF** this startup is the initial approach to criticality following a refueling outage,
THEN PERFORM a **REFUELING OUTAGE STARTUP, AND** N/A Sections 6.1 and 6.5.

4.0 PREREQUISITES (Continued) **INITIALS**

B. **ENSURE** the following conditions are satisfied:

- Unit 1 is in Mode 3 ____
- T_{COLD} is greater than 525° F **[B0140]** ____
- Pressurizer pressure is between 2225 and 2275 PSIA ____
- Pressurizer level is being maintained with a setpoint of 160 inches ____
- All CEAs are fully inserted ____
- RC Waste has sufficient capacity for RCS dilution ____

NOTE
The boron concentration is considered equalized between the RCS and the PZR after maximizing spray for at least 5 hours after the desired RCS boron concentration is verified. **[B0361]**

- PZR Spray is being maximized to equalize the boron concentration between the RCS and PZR. ____
- **VERIFY** 1C05 digital power indication, 1-XI-5515, is setup **PER** OI-50A, PLANT COMPUTER, for indicating WRNI power. **[B0386]** **[B0032]** ____

C. **REQUEST** Chemistry to confirm that the requirements of CP-204, SPECIFICATION AND SURVEILLANCE - PRIMARY SYSTEMS **AND** CP-217, SPECIFICATIONS AND SURVEILLANCE - SECONDARY CHEMISTRY are satisfied **PRIOR** to taking the Reactor critical. ____

D. **CHECK** with NFM to ensure the reactivity calculator that feeds computer points, NRRHO1 and NRRHO2, is available for startup. ____

4.0 PREREQUISITES (Continued) **INITIALS**

E. **IF** performing a **QUICK TRIP RECOVERY OR** a **NORMAL PLANT STARTUP,**
THEN CALCULATE an Estimated Critical Condition (ECC) **PER** NEOP-302, using the following CEA target position:

1. **IF** this startup is greater than 24 hours since the Reactor trip **AND** Core burnup is less than 12,000 MWD/MTU,
THEN CEA target position shall be between 45 and 90 inches on Regulating Group 4. **[B0604]** ____

> **NOTE**
> Startup with Regulating Group 4 at 90 inches provides adequate margin for ASI control using CEAs.

2. **IF** this startup is less than 24 hours since the Reactor trip **OR** Core burnup is greater than 12,000 MWD/MTU,
THEN CEA target position shall be 90 inches on Regulating Group 4. **[B0604]** ____

3. **ENSURE** RCS boron concentration is sufficient to provide a shutdown margin as required by Tech Spec 3.1.1, NEOP-301 and 302, **AND** is **NOT** less than the ECC boron concentration. **[B0605]** ____

4. **IF** core burnup is less than or equal to 1,000 MWD/MTU,
THEN CONTACT NFM to determine whether a RCS boron concentration limit exists to ensure MTC is within the limits of Tech Spec 3.1.3. ____

F. **ENSURE** the following dedicated operators are assigned for the Unit startup: **[B0372]**

- An SRO to supervise the plant startup ____
- A Licensed Operator for starting up and paralleling the Main Turbine at 1C02 (when directed by the dedicated SRO) ____
- A Licensed Operator to operate Main Feedwater at 1C03 (when directed by the dedicated SRO) ____

G. **REQUEST** the dedicated SRO to brief the RO, CRO and any additional licensed operators on the monitoring of diverse indications of reactor power **AND** actions to be taken in response to discrepancies between indications. This brief shall include the anticipation of and indications of reactor criticality. **[B0071] [B0270]** ____

- **COMMENCE** performing this briefing for successive shift turnovers until power is raised above 30% **AND** an NI calibration has been completed. **[B0071]**

5.0 PRECAUTIONS

A. Criticality shall be anticipated whenever: **[B0270]**

- CEAs are being withdrawn
- Boron dilution is in progress
- Heatup or Cooldown operations are performed during Reactor startup
- Xenon burnout in progress, less than 84 hrs from shutdown

B. **WHEN** any of the above evolutions are taking place,
THEN all available instrumentation should be used to monitor the approach to criticality to allow for errors in the ECC or problems with the instrumentation. **[B0032] [B0270]**

C. Inadequate control of reactivity has the potential for damaging the core. Reliance on safety system actuation reduces the margin of safety. Conservative actions and strict compliance with written procedures are necessary when re-positioning control rods. **[B0032] [B0270]**

D. Activities that can distract operators and supervisors involved with a reactor startup, such as shift turnover and surveillance testing during the approach to criticality, shall be avoided. Control Room access will be controlled **PER** NO-1-100, CONDUCT OF OPERATIONS. **[B0032]**

E. The Linear Range Nuclear Instruments (LRNIs) are subject to error when RCS temperature varies from the temperature at which the LRNIs were calibrated. Due to the large temperature changes that occur when changing power, RPS Delta T Power should be used as the primary power indication until the LRNIs are re-calibrated at the new steady state RCS temperature. Comparisons shall periodically be made between all four RPS channels and to the plant computer as indicated on the Two Minute Reactor Thermal Output, PA911. **[B0012] [B0270]**

F. **WHEN** changing RCS boron concentration,
THEN VERIFY that at least one RCP is running **AND** PZR spray is in operation until the desired boron concentration has been **REACHED AND VERIFIED.** **[B0271] [B0272]**

G. Reactivity changes can be monitored using the plant computer points NRRHO1 (measured power range 3% - 100%) or NRRHO2 (measured power range 10^{-5}% - 100%) These points are to be used for **TRENDING** reactivity only. For reactor startups that are controlled by PSTP-2; the on-shift NFM-SE will provide the necessary guidance using the various plant computer points. **[B0404] [B0922]**

H. To prevent overpressurizing the piping between the SGFP discharge valve and the discharge check valve, do **NOT** start one SGFP with the other SGFP's discharge valve shut **UNLESS** the isolated SGFP is tagged out **PER** OI-12A, FEEDWATER SYSTEM, APPENDIX B, SGFP TAGOUT.

5.0 PRECAUTIONS (Continued)

I. Primary plant anomalies caused by secondary plant transients are rarely, if ever, successfully mitigated by adding positive reactivity, especially by withdrawing CEAs. Do **NOT** use CEAs to control RCS temperature without an approved procedure. **[B0372]**

J. When preparing to take the Reactor Critical, Boron samples shall be within 5 ppm of ECC boron concentration. ECC may be adjusted for present Boron sample. **[B0668]**

K. IF at **ANY** time, a critical Reactor becomes subcritical as indicated by the following: **[B2412]**

- Reactor power less than 10^{-1}%
- Flux level lowering

THEN FULLY INSERT ALL Regulating CEAs.

6.0 PROCEDURE

INITIALS

NOTE

This section provides a mechanism for a quick return to power following a reactor shutdown that does **NOT** require lengthy follow-up actions, maintenance or calibration of RPS cabinets or associated sensors.

6.1 QUICK TRIP RECOVERY

A. **CHECK** the following:

- The unit has been shutdown for less than 36 hours **OR** GS-SO approval has been obtained. ____
- The cause of the reactor trip does **NOT** require any maintenance **OR** calibration to be performed on the RPS Cabinets or associated sensors. ____

B. **ENSURE** a post-trip review satisfactorily completed **PER** NO-1-111, POST-TRIP REVIEW. ____

C. **LIST** all Technical Specification Action Statements that are in effect **AND** the resolution to allow change to Mode 2:

ACTION STATEMENT	RESOLUTION

D. **OBTAIN** GS-SO permission to perform a quick trip recovery. ____

E. **REVIEW** OP-3, NORMAL POWER OPERATION, **AND** OP-4, PLANT SHUTDOWN FROM POWER OPERATION TO HOT STANDBY, **AND** **ENSURE** steps supporting plant shutdown are performed. ____

F. **PERFORM** a containment closeout inspection **PER** OP-6, PRE-STARTUP CHECKOFF, Section 6.6, Quick Trip Recovery Containment Closeout Inspection. ____

6.1 QUICK TRIP RECOVERY (Continued) **INITIALS**

G. **IF** STP O-6-1, RPS STARTUP TEST, has **NOT** been performed within the last 7 days,
THEN PERFORM STP O-6-1. ____

H. **IF** PE 1-48-1-O-SA, DIVERSE SCRAM SYSTEM LOGIC TEST (OI-34), has **NOT** been performed within the last 6 months,
THEN PERFORM PE 1-48-1-O-SA. ____

I. **PERFORM** STP O-62-1, MONTHLY VALVE POSITION VERIFICATION, for Modes 1 and 2. ____

J. **PERFORM** a detailed walkdown of the Control Room Panels. ____

K. **REVIEW** all Control Room Deficiency Tags, POTTS Tags and Temporary Notes to ensure that any Mode 1 or Mode 2 operability concerns they track are resolved. ____

NOTE
STP O-94A-1, COOLANT LOOP OPERABILITY VERIFICATION (MODE 3), should have been performed when the Unit entered Mode 3 from Mode 2.

L. **ENSURE** STP O-94A-1, COOLANT LOOP OPERABILITY VERIFICATION (MODE 3), satisfactorily completed. ____

M. **CHECK** the following:

- The ΔT Power calibration potentiometers on all 4 RPSCIP drawers are within the range specified in the Setpoint File. ____
- The NI Power calibration potentiometers on all 4 RPSCIP drawers are set at the AS LEFT VALUE of the most recent Excore NI calibration (CRO Log **OR** STP M-213-1). ____

CAUTION
When performing a Reactor Startup during a steep Xenon burnout curve time frame, attention should be given to time delays vs the lower critical rod height and potentially going critical on Xenon burnout.

N. **CHECK** that the actual time of criticality will be within two hours of the estimated time of criticality of the ECC. ____

- **IF NOT**,
THEN PERFORM another ECC that uses a more accurate time of criticality. ____

****** END ******

NOTE
This section is independent and may be performed concurrently with the remainder of the procedure.

6.2 PREPARE SECONDARY SYSTEMS FOR STARTUP — INITIALS

NOTE
IF performing a Quick Trip Recovery,
THEN OP-6, Section 6.4 need **NOT** be completed.

A. **IF** this is **NOT** a Quick Trip Recovery,
THEN ENSURE OP-6, Section 6.4 is initiated. ____

B. **IF** Condenser vacuum is **NOT** established **AND** it is **NOT** expected to be drawn for some time,
THEN ALIGN the High Pressure Steam Drains to the STARTUP position **PER** OI-8C, MAIN STEAM AND MSR VENTS AND DRAINS, until Condenser vacuum is drawn. ____

C. **IF** Condenser vacuum is **NOT** established **AND** sufficient equipment is available,
THEN DRAW Condenser vacuum **PER** OI-13, CONDENSER AIR REMOVAL. ____

NOTE
The remaining steps in this section are performed ONLY after Condenser vacuum is drawn.

D. **ALIGN** the High Pressure Steam Drains to the NORMAL OPERATING position **PER** OI-8C, MAIN STEAM AND MSR VENTS AND DRAINS (N/A if Condenser Vacuum has **NOT** been broken or was previouly established **AND** High Pressure Steam Drains are aligned to the NORMAL OPERATING position **PER** OI-8C, MAIN STEAM AND MSR VENTS AND DRAINS). ____

E. **START UP** Main Feedwater **PER** OI-12A, FEEDWATER SYSTEM. ____

F. **ENSURE** the Plant Computer point PAVFTKB, PA911VFT MANUAL CORRECTION FACTOR is set at 1.00115. ____

G. **SECURE** Auxiliary Feedwater **PER** OI-32A, AUXILIARY FEEDWATER SYSTEM. ____

H. **IF** required **OR** directed by Chemistry,
THEN PLACE Blowdown in service **PER** OI-8A, BLOWDOWN SYSTEM. ____

6.2 PREPARE SECONDARY SYSTEMS FOR STARTUP (Continued) **INITIALS**

I. **IF** the MSIVs are shut,
THEN PERFORM the following:

1. **CLOSE** the power supply breakers to the MSIV Bypass valves:

   - MAIN STEAM VALVE 11 BYPASS 1-MOV-4045, 52-11428 ____
   - MAIN STEAM VALVE 12 BYPASS 1-MOV-4052, 52-10428 ____

2. **OPEN** the MSIV bypass valves to start warming the Main Steam headers:

   - 11 MSIV BYP, 1-MS-4045-MOV ____
   - 12 MSIV BYP, 1-MS-4052-MOV ____

3. **CYCLE** MS UPSTREAM DRN VLVS, 1-HS-6622, as necessary to prevent excessive blowdown of the Main Steam header. ____

4. **CHECK** Main Steam header pressure stabilized within 100 PSID of Steam Generator pressure. ____

   - **IF** necessary to lower the ΔP across the MSIVs,
     THEN SHUT selected High Pressure Drains until the ΔP is within 100 PSID. ____

5. **OPEN** 11 and 12 MSIVs:

   - 11 MSIV, 1-MS-4043-CV ____
   - 12 MSIV, 1-MS-4048-CV ____

6. **SHUT** 11 and 12 MSIV Bypass valves:

   - 11 MSIV BYP, 1-MS-4045-MOV ____
   - 12 MSIV BYP, 1-MS-4052-MOV ____

7. **OPEN** the power supply breakers to the MSIV Bypass valves: **[B0350]**

   - MAIN STEAM VALVE 11 BYPASS 1-MOV-4045, 52-11428 ____
   - MAIN STEAM VALVE 12 BYPASS 1-MOV-4052, 52-10428 ____

6.2 PREPARE SECONDARY SYSTEMS FOR STARTUP (Continued) **INITIALS**

J. **IF** maintenance was performed on a MSIV,
THEN CYCLE MSIVs as follows:
(N/A if MSIVs have been cycled previously at NOP/NOT post-maintenance) **[B0232]**

1. **CLOSE** the power supply breakers to the MSIV Bypass valves:

   - MAIN STEAM VALVE 11 BYPASS 1-MOV-4045, 52-11428 ____
   - MAIN STEAM VALVE 12 BYPASS 1-MOV-4052, 52-10428 ____

2. **OPEN** both MSIV Bypass Valves, 1-MS-4045-MOV and 1-MS-4052-MOV. ____

3. **SHUT** both MSIVs. ____

4. **ADJUST** the ADVs as necessary to obtain the desired steaming rate. ____

5. **OPEN** both MSIVs ____

6. **WHEN** both MSIVs are fully open,
   THEN SHUT the MSIV Bypass Valves. ____

7. **OPEN** the power supply breakers to the MSIV Bypass valves: **[B0350]**

   - MAIN STEAM VALVE 11 BYPASS 1-MOV-4045, 52-11428 ____
   - MAIN STEAM VALVE 12 BYPASS 1-MOV-4052, 52-10428 ____

K. **SHIFT** temperature control of the RCS to the Turbine Bypass Valves as follows:

> **NOTE**
> Performing the next two steps simultaneously provides a smooth transfer of RCS temperature control.

- **PLACE** TBV CONTR, 1-PIC-4056, in AUTO with a target setpoint of 900 PSI **AND ADJUST** the setpoint as necessary to maintain T_{COLD} at 532° F. ____

- **SHUT** the Atmospheric Steam Dumps **AND PLACE** ADV CONTR, 1-HIC-4056, in AUTO. ____

L. Locally **CHECK** 16A and 16B Feedwater Heater Shell levels. ____

- **IF** 16A and 16B Feedwater Heaters levels are **NOT** approximately 5 inches,
  THEN FILL them to approximately 5 inches **PER** OI-8B, FEEDWATER HEATER VENTS **AND** DRAINS. ____

6.2 PREPARE SECONDARY SYSTEMS FOR STARTUP (Continued) **INITIALS**

M. **ENSURE** Extraction Line Drains are aligned for STARTUP OPERATION **PER** OI-8C, MAIN STEAM AND MSR VENTS AND DRAINS. ____

> **NOTE**
> The remaining steps are required to be completed **PRIOR** to rolling the Main Turbine **AND** may be performed concurrently or in any order.

N. **PREPARE** the MSRs **PRIOR** to rolling the Main Turbine **PER** OI-8D, MOISTURE SEPARATOR/REHEATER OPERATION. ____

O. **CYCLE** all Feedwater Heater High Level Dump Valves using their handswitches on 1C03. ____

- **ENSURE** 11 and 12 Low Pressure Feedwater Heater High Level Dump Valve handswitches on 1C03 returned to OPEN. ____

> **NOTE**
> Operating experience has shown that shifting Seal Exhaust Blowers can introduce contaminants to the Condensate system. Shifting blowers at this time will allow cleanup of any contaminants before power operation.

P. **SHIFT** Seal Exhaust Blowers **PER** OI-9B, TURBINE STEAM SEAL. ____

Q. **ENSURE** Intermediate Drains are aligned for STARTUP OPERATION **PER** OI-8C, MAIN STEAM AND MSR VENTS AND DRAINS. ____

R. **ENSURE** Feedwater Heater Vents and Drains are aligned for STARTUP OPERATION **PER** OI-8B, FEEDWATER HEATER VENTS AND DRAINS. ____

S. **ENSURE** the Feedwater HTR and MSR High Level Dump Isolation Valves are aligned to the STARTUP position **PER** ATTACHMENT 1, FEEDWATER HTR AND MSR HIGH LEVEL DUMP STARTUP ALIGNMENT. ____

T. **ENSURE** 16A and 16B Feedwater Heater Normal Level Control Valve Isolation Valves are shut **PRIOR** to rolling the Main Turbine:

- 16A FWH DRN TO 15A HTR, 1-HDV-109 ____
- STOP 16B FWH DRN TO 15B HTR, 1-HDV-114 ____

U. **COMPLETE** the Initial Conditions for Turbine Startup **PER** OI-43A, MAIN TURBINE AND GENERATOR/EXCITER OPERATION. ____

****** END ******

6.3 PREPARE PRIMARY SYSTEMS FOR STARTUP **INITIALS**

A. **IF** the Technical Support Center Computer is **NOT** available, **THEN NOTIFY** the GS-SO. ____

B. **VERIFY** TCB-9 is closed. ____

C. **STARTUP OR VERIFY** the Control Element Drive System is in operation **PER** OI-42, CEDM SYSTEM OPERATION. ____

D. **STARTUP OR VERIFY** the CEA Motor Generator Sets are in operation **PER** OI-42, CEDM SYSTEM OPERATION. ____

E. **ENSURE** TCB-1 through TCB-8 are shut. ____

F. **CHECK** ALL 1C15E **AND** 1C15F mimic panel Phase Current indicating lights illuminated. ____

G. **RESET** ALL CEDM Coil Power Programmer Backup Power Supplies (located on the back of the CEDM Coil Programmer panels, Unit 1 Cable Spreading Room). ____

H. **RESET** ALL 4 TURBINE UV sensor modules. ____

1. **CHECK** the ZB TURBINE UV logic module reset. ____

2. **CHECK** the 1C05 annunciator "REACTOR TRIP BUS U/V RELAY TRIP" clears. ____

I. **VERIFY** proper operation of the Turbine Control system **PER** OI-43A, MAIN TURBINE AND GENERATOR/EXCITER OPERATION, Section titled VERIFICATION OF TURBINE CONTROL SYSTEM PRIOR TO STARTUP. ____

J. **IF** STP O-6-1, RPS STARTUP TEST, has **NOT** been performed within the last 7 days, **THEN PERFORM** STP O-6-1. ____

NOTE

- **IF** performing a Quick Trip Recovery, **THEN** OP-6, Section 6.4 need **NOT** be completed.
- If performing PSTP-2, it will direct when OP-6 Section 6.4 must be completed, prior to entry into MODE 2.

K. **IF** this is **NOT** a Quick Trip Recovery, **OR** if **NOT** performing PSTP-2, INITIAL APPROACH TO CRITICALITY AND LOW POWER PHYSICS TESTING PROCEDURE, **THEN ENSURE** OP-6, Section 6.4 is complete. ____

6.3 PREPARE PRIMARY SYSTEMS FOR STARTUP (Continued) **INITIALS**

NOTE
The VCT level should be maintained low in the band to accommodate the inventory from RCP bleedoff if Fast Boration is required.

L. **MAINTAIN** VCT level low in the band until the CEAs are above ZPDIL (54.4 inches on Group 3). ____

****** END ******

6.4 REFUELING OUTAGE STARTUP

INITIALS

A. **ENSURE** the NFM-SE and Shift Manager have briefed the dedicated SRO, CRO, RO and any additional licensed operators on the conditions and responses expected while taking the Reactor critical. **[B0270] [B0404]** ____

- **COMMENCE** performing this briefing for successive shift turnovers until the NFM-SE is complete with PSTP-2 **AND** this section is exited. **[B0404]** ____

B. **ENSURE** NO RCS boron dilution evolutions in progress. **[B0270]** ____

C. **ENSURE** RCS boron concentration is at least 150 PPM greater than ECC concentration. **[B0605]** ____

D. **SUSPEND** evolutions that may affect RCS temperature and add reactivity to the core. **[B0270]** ____

E. **ENSURE** ALL 4 ZERO POWER MODE bypass keyswitches in OFF (located on the RPS cabinets). ____

F. **IF** desired, 04601
THEN ENSURE Electrical Maintenance personnel are available to record Insertion and Withdrawal CEA traces using the COILCET test equipment, **AND** communications are established with the CR. ____

G. **PERFORM** a Reactor start-up and testing under the direction of the NFM-SE **PER** PSTP-2, INITIAL APPROACH TO CRITICALITY AND LOW POWER PHYSICS TESTING PROCEDURE and ETP 99-15R, CEDM PERFORMANCE TESTING. ____

H. GO TO Section 6.8, MODE 1 PREPARATIONS. ____

****** END ******

6.5 WITHDRAW SHUTDOWN CEA GROUPS

INITIALS

A. **IF** at any time the Reactor reaches criticality below ZPDIL (54.4 inches on Group 3),
THEN PERFORM the following: **[B0032][B0050]**

1. Immediately **INITIATE** Fast Boration of the RCS to raise boron concentration by the following amount: ____

GROUP BEING WITHDRAWN WHEN CRITICAL	INCREASE BORON CONCENTRATION BY
GROUP A	900 PPM
GROUP B, C	800 PPM

2. **SHIFT** the VCT Inlet valve, 1-CVC-500-CV, to the WPS position. ____

3. **TRIP** the Reactor **AND IMPLEMENT** EOP-0, POST-TRIP IMMEDIATE ACTIONS. ____

B. **IF** desired,
THEN ENSURE Electrical Maintenance personnel are available to record Insertion and Withdrawal CEA traces using the COILCET test equipment, **AND** communications are established with the CR. ____ 04601

C. **IMPLEMENT** at least one of the following reactivity monitoring methods: **[B0032] [B0270]** ____

- Countrate Doubling **PER** APPENDIX 1
- 1/M **PER** APPENDIX 2
- 1/M plotting on the Plant Computer

D. **ENSURE** the requirements of Tech Spec 3.1.4, 3.1.5 and 3.1.6 for Reactivity Control and TRM 15.1.4 for CEA Position Indication, are met when withdrawing CEAs. ____

6.5 WITHDRAW SHUTDOWN CEA GROUPS (Continued) **INITIALS**

NOTE
All CEAs in a group should be aligned to the same height prior to group withdrawal to help prevent CEA deviation alarms when withdrawing the group.

CAUTION
- Criticality shall be anticipated when CEAs are being withdrawn. **[B0032]**
- Withdraw CEAs only in a deliberate and carefully controlled manner. During withdrawal, constantly monitor nuclear instrumentation and redundant indications of reactor power level and neutron flux. **[B0372]**

E. **WITHDRAW** Shutdown CEAs approximately 4.5 inches to clear the Dropped CEA light (amber light) and prevent nuisance PDIL alarms as follows:

1. **PLACE** CEAs in MANUAL GROUP. ____
2. **SELECT** Shutdown Group A. ____
3. **WITHDRAW** ALL Shutdown Group A CEAs approximately 4.5 inches ____
4. **SELECT** Shutdown Group B. ____
5. **WITHDRAW** ALL Shutdown Group B CEAs approximately 4.5 inches ____
6. **SELECT** Shutdown Group C. ____
7. **WITHDRAW** ALL Shutdown Group C CEAs approximately 4.5 inches ____

6.5 WITHDRAW SHUTDOWN CEA GROUPS (Continued) **INITIALS**

CAUTION

- Criticality shall be anticipated when CEAs are being withdrawn. **[B0032]**
- Do **NOT** exceed a sustained one DPM startup rate.
- Withdraw CEAs only in a deliberate and carefully controlled manner. During withdrawal, constantly monitor nuclear instrumentation and redundant indications of reactor power level and neutron flux. **[B0372]**
- When performing a Reactor Startup during a steep Xenon burnout curve time frame, attention should be given to time delays vs the lower critical rod height and potentionally going critical on Xenon burnout.

F. Fully **WITHDRAW** Shutdown CEAs as follows:

1. **PLACE** CEAs in MANUAL GROUP. ____
2. **SELECT** Shutdown Group A. ____
3. **WITHDRAW** Shutdown Group A to the Upper Computer Stop (UCS). ____
4. **PLACE** CEAs in MANUAL INDIVIDUAL. ____
5. Alternately **SELECT** each individual CEA in Shutdown Group A, **AND WITHDRAW** it to the Upper Electrical Limit (UEL). ____
   - **CHECK** the UEL Light illuminates as each CEA reaches its UEL. ____
   - **VERIFY** CEAPDS indicates 133"-136" for each CEA as it reaches the UEL. (TRM TNC 15.1.4.a) ____
6. **PLACE** CEAs in MANUAL GROUP. ____
7. **SELECT** Shutdown Group B. ____
8. **WITHDRAW** Shutdown Group B to the UCS. ____
9. **PLACE** CEAs in MANUAL INDIVIDUAL. ____
10. Alternately **SELECT** each individual CEA in Shutdown Group B, **AND WITHDRAW** it to the UEL. ____
    - **CHECK** the UEL Light illuminates as each CEA reaches its UEL. ____
    - **VERIFY** CEAPDS indicates 133"-136" for each CEA as it reaches the UEL. (TRM TNC 15.1.4.a) ____

6.5.F WITHDRAW SHUTDOWN CEA GROUPS (Continued) **INITIALS**

11. **PLACE** CEAs in MANUAL GROUP. ____

12. **SELECT** Shutdown Group C. ____

13. **WITHDRAW** Shutdown Group C to the UCS. ____

14. **PLACE** CEAs in MANUAL INDIVIDUAL. ____

15. Alternately **SELECT** each individual CEA in Shutdown Group C, **AND WITHDRAW** it to the UEL. ____

    - **CHECK** the UEL Light illuminates as each CEA reaches its UEL. ____
    - **VERIFY** CEAPDS indicates 133"-136" for each CEA as it reaches the UEL. (TRM TNC 15.1.4.a) ____

16. **WHEN** ALL Shutdown Groups are at their UEL, **THEN UPDATE** their primary indications on the Plant Computer to 135 inches. ____

17. **LOG** in the CRO Log Book that ALL Shutdown CEAs are fully withdrawn. ____

****** END ******

6.6 WITHDRAW REGULATING CEA GROUPS ABOVE ZPDIL

INITIALS

A. **IF** at any time the Reactor reaches criticality below ZPDIL (54.4 inches on Group 3),
THEN PERFORM the following: **[B0032][B0050]**

1. Immediately **INITIATE** Fast Boration of the RCS to raise boron concentration by the following amount: ____

GROUP BEING WITHDRAWN WHEN CRITICAL	INCREASE BORON CONCENTRATION BY
GROUP 1	800 PPM
GROUP 2 or 3	200 PPM

2. **SHIFT** the VCT Inlet valve, 1-CVC-500-CV, to the WPS position. ____

3. **TRIP** the Reactor **AND IMPLEMENT** EOP-0, POST-TRIP IMMEDIATE ACTIONS. ____

B. **OBSERVE** ALL four WRNI channel readings.

- **IF** any WRNI indicates less than 0.2 CPS,
THEN REQUEST the NFM-SE for direction on performing a modified approach to criticality. ____

- **IF** using the manual 1/M reactivity monitoring method,
THEN RECORD the lowest count rate in Appendix 2. ____

C. **IF** desired,
THEN ENSURE Electrical Maintenance personnel are available to record Insertion and Withdrawal CEA traces using the COILCET test equipment, **AND** communications are established with the CR. ____ 04601

D. **NOTIFY** Radiation Safety Supervision that the Reactor is being taken critical. ____

E. **ENSURE** ALL 4 ZERO POWER MODE bypass keyswitches in OFF (located on the RPS cabinets). ____

F. **ENSURE** NO RCS boron dilution evolutions in progress. ____

G. **REQUEST** Plant Chemistry to begin RCS boron sampling every 30 minutes **AND RECORD** the results in the CRO Log. **[B0605]** ____

H. **SUSPEND** evolutions that may affect RCS temperature and add reactivity to the core. ____

6.6 WITHDRAW REGULATING CEA GROUPS ABOVE ZPDIL (Continued) **INITIALS**

CAUTION
All Shutdown CEAs shall be fully withdrawn **PRIOR** to Regulating Group withdrawal

I. **IF** the RCS boron Concentration is within 100 PPM of ECC boron concentration,
THEN LOG the RCS T_{COLD} every 30 minutes in the CRO's log book, while withdrawing Regulating Group CEAs.
(Tech Spec SR 3.4.2.1) ____

NOTE
All CEAs in a group should be aligned to the same height prior to group withdrawal to help prevent CEA deviation alarms when withdrawing the group.

CAUTION
- Criticality shall be anticipated when CEAs are being withdrawn. **[B0032]**
- Withdraw CEAs only in a deliberate and carefully controlled manner. During withdrawal, constantly monitor nuclear instrumentation and redundant indications of reactor power level and neutron flux. **[B0372]**
- When performing a Reactor Startup during a steep Xenon burnout curve time frame, attention should be given to time delays vs the lower critical rod height and potentially going critical on Xenon burnout.

J. **WITHDRAW** Regulating CEAs approximately 4.5 inches to clear the Dropped CEA light (amber light) and prevent nuisance PDIL alarms as follows:

1. **PLACE** CEAs in MANUAL GROUP. ____
2. **SELECT** Regulating Group 1. ____
3. **WITHDRAW** ALL Regulating Group 1 CEAs approximately 4.5 inches. ____
4. **SELECT** Regulating Group 2. ____
5. **WITHDRAW** ALL Regulating Group 2 CEAs approximately 4.5 inches. ____
6. **SELECT** Regulating Group 3. ____
7. **WITHDRAW** ALL Regulating Group 3 CEAs approximately 4.5 inches. ____
8. **SELECT** Regulating Group 4. ____

6.6.J WITHDRAW REGULATING CEA GROUPS ABOVE ZPDIL (Continued) **INITIALS**

9. **WITHDRAW** ALL Regulating Group 4 CEAs approximately 4.5 inches. ____

10. **SELECT** Regulating Group 5. ____

11. **WITHDRAW** ALL Regulating Group 5 CEAs approximately 4.5 inches. ____

K. **ENSURE** at least one of the following reactivity monitoring methods is in use: **[B0032]** ____

- Countrate Doubling **PER** APPENDIX 1
- 1/M **PER** APPENDIX 2
- 1/M plotting on the Plant Computer

L. **PLACE** the WRNI chart recorder paper speed in MIN. ____

M. **OBSERVE** the following requirements while withdrawing Regulating Groups:

1. Closely **MONITOR** ALL WRNI channels **AND** CEA positions. ____

2. **ENSURE** that the CEAs are withdrawn in proper sequence **AND** with a minimum of 90 inches overlap, indicated by Secondary Group Position indication. ____

   a. **IF** less than a 90 inch overlap between groups exist, **THEN USE** Manual Group to restore the 90 inch overlap. ____

3. **AFTER** each incremental withdrawal, **THEN TERMINATE** CEA motion **AND OBSERVE** flux level until it stabilizes **OR** an observable trend is noted. **[B0032]** ____

6.6 WITHDRAW REGULATING CEA GROUPS ABOVE ZPDIL (Continued) **INITIALS**

NOTE

- MANUAL SEQUENTIAL is the preferred method for Regulating Group withdrawal.
- CEAs should be withdrawn with increments no more than 30 inches in MANUAL SEQUENTIAL.

CAUTION

- Criticality shall be anticipated when CEAs are being withdrawn. **[B0032]**
- Do **NOT** exceed a 1 DPM sustained startup rate.
- Withdraw CEAs only in a deliberate and carefully controlled manner. During withdrawal, constantly monitor nuclear instrumentation and redundant indications of reactor power level and neutron flux. **[B0372]**

N. **IF** the Plant Computer **AND** DAS B is available, **THEN WITHDRAW** Regulating Groups to 90 inches on Group 3 as follows:

1. **PLACE** CEAs in MANUAL SEQUENTIAL. ____
2. **WITHDRAW** Regulating Group 1 to the UCS in equal increments **AND PERFORM** the following: ____
   - **ALLOW** flux level to stabilize after each incremental withdrawal ____
   - **ENSURE** a minimum of 90 inch overlap maintained with Regulating Group 2, by Secondary Group Position indication. ____
3. **PLACE** CEAs in MANUAL INDIVIDUAL. ____
4. Alternately **SELECT** each individual CEA in Regulating Group 1 **AND WITHDRAW** it to the Upper Electrical Limit (UEL). ____
   - **CHECK** the UEL Light illuminates as each CEA reaches its UEL. ____
   - **VERIFY** CEAPDS indicates 133"-136" for each CEA as it reaches the UEL. (TRM TNC 15.1.4.a) ____
5. **PLACE** CEAs in MANUAL SEQUENTIAL. ____
6. **WITHDRAW** Regulating Group 2 to the UCS in equal increments **AND PERFORM** the following: ____
   - **ALLOW** flux level to stabilize after each incremental withdrawal ____
   - **ENSURE** a minimum of 90 inch overlap maintained with Regulating Group 3, by Secondary Group Position indication. ____

6.6.N WITHDRAW REGULATING CEA GROUPS ABOVE ZPDIL (Continued) **INITIALS**

7. **PLACE** CEAs in MANUAL INDIVIDUAL. ____

8. Alternately **SELECT** each individual CEA in Regulating Group 2 **AND WITHDRAW** it to the UEL. ____

   - **CHECK** the UEL Light illuminates as each CEA reaches its UEL. ____
   - **VERIFY** CEAPDS indicates 133"-136" for each CEA as it reaches the UEL. (TRM TNC 15.1.4.a) ____

9. **PLACE** CEAs in MANUAL SEQUENTIAL. ____

10. **WITHDRAW** Regulating Group 3 to 90 inches in equal increments **AND PERFORM** the following: ____

    - **ALLOW** flux level to stabilize after each incremental withdrawal ____
    - **IF** RCS boron concentration is within 100 PPM of ECC boron concentration,
      THEN DECLARE Mode 2 when Group 3 CEAs reach ZPDIL (54.4 inches). ____
    - **ENSURE** a minimum of 90 inch overlap maintained with Regulating Group 4, by Secondary Group Position indication. ____

6.6 WITHDRAW REGULATING CEA GROUPS ABOVE ZPDIL (Continued) **INITIALS**

NOTE
When Reg Group 1 is greater than 90 inches withdrawn, CEAs SHALL be withdrawn with increments no more than 10 inches in MANUAL GROUP to maintain proper overlap.

CAUTION
- Criticality shall be anticipated when CEAs are being withdrawn. **[B0032]**
- Do **NOT** exceed a 1 DPM sustained startup rate.
- Withdraw CEAs only in a deliberate and carefully controlled manner. During withdrawal, constantly monitor nuclear instrumentation and redundant indications of reactor power level and neutron flux. **[B0372]**

O. **IF** the Plant Computer **OR** DAS B is **NOT** available, **THEN WITHDRAW** Regulating Groups to 90 inches on Group 3 as follows:

1. **PLACE** CEAs in MANUAL GROUP. ____

2. **WITHDRAW** Regulating Group 1 to the UCS in equal increments **AND PERFORM** the following: ____
   - **ALLOW** flux level to stabilize after each incremental withdrawal ____
   - Alternately **SELECT** Regulating Group 2 **AND MAINTAIN** a minimum of 90 inch overlap with Regulating Group 1, by Secondary Group Position indication. ____

3. **PLACE** CEAs in MANUAL INDIVIDUAL. ____

4. Alternately **SELECT** each individual CEA in Regulating Group 1 **AND WITHDRAW** it to the Upper Electrical Limit (UEL). ____
   - **CHECK** the UEL Light illuminates as each CEA reaches its UEL. ____
   - **VERIFY** CEAPDS indicates 133"-136" for each CEA as it reaches the UEL. (TRM TNC 15.1.4.a) ____

5. **PLACE** CEAs in MANUAL GROUP. ____

6. **WITHDRAW** Regulating Group 2 to the UCS in equal increments **AND PERFORM** the following: ____
   - **ALLOW** flux level to stabilize after each incremental withdrawal ____
   - Alternately **SELECT** Regulating Group 3 **AND MAINTAIN** a minimum of 90 inch overlap with Regulating Group 2, by Secondary Group Position indication. ____

6.6.O WITHDRAW REGULATING CEA GROUPS ABOVE ZPDIL (Continued) **INITIALS**

7. **PLACE** CEAs in MANUAL INDIVIDUAL. ____

8. Alternately **SELECT** each individual CEA in Regulating Group 2 **AND WITHDRAW** it to the UEL. ____

   - **CHECK** the UEL Light illuminates as each CEA reaches its UEL. ____
   - **VERIFY** CEAPDS indicates 133"-136" for each CEA as it reaches the UEL. (TRM TNC 15.1.4.a) ____

9. **PLACE** CEAs in MANUAL GROUP. ____

10. **WITHDRAW** Regulating Group 3 to 90 inches in equal increments **AND PERFORM** the following: ____

    - **ALLOW** flux level to stabilize after each incremental withdrawal ____

    - **IF** RCS boron concentration is within 100 PPM of ECC boron concentration,
      THEN DECLARE Mode 2 when Group 3 CEAs reach ZPDIL (54.4 inches). ____

P. **UPDATE** Regulating Group 1 **AND** 2 primary indications on the Plant Computer to 135 inches. ____

****** END ******

6.7 TAKE THE REACTOR CRITICAL

INITIALS

A. **CHECK** that the predicted critical CEA position is between the Long Term Steady State Insertion Limit and the Transient Insertion Limit of Tech Spec 3.1.6 within the following time **PRIOR** to taking the Reactor critical: ____

- Normal reactor startup: 4 hours
- Quick Trip Recovery: 2 hours

B. **ENSURE** at least one of the following reactivity monitoring methods is in use: **[B0032]** ____

- Countrate Doubling **PER** APPENDIX 1
- 1/M **PER** APPENDIX 2
- 1/M plotting on the Plant Computer

1. **UPDATE** the countrate baseline data. ____

> **NOTE**
> Maintaining RCS T_{COLD} greater than 525° F when the Reactor is critical reduces Reactor Vessel neutron embrittlement. **[B0140]**

C. **CHECK** RCS T_{COLD} at least 525° F within 30 minutes **PRIOR** to taking the Reactor critical. **[B0140]** ____

- **LOG** fulfillment of Tech Spec SR 3.4.2.1 in the CRO Log Book. ____
- **COMMENCE** logging RCS T_{COLD} once every 30 minutes in the CRO Log Book until the reactor is critical. ____

D. **ENSURE** the WRNI chart recorder paper speed in MIN. ____

6.7 TAKE THE REACTOR CRITICAL (Continued) **INITIALS**

E. **IF** the actual RCS boron concentration is **NOT** within 5 PPM of ECC boron concentration,
THEN PERFORM the following: **[B0668]**

- **ADJUST** the ECC CEA position for the actual RCS boron concentration **PER** NEOP-302. ____

OR

- **DILUTE** the RCS to ECC boron concentration as follows:

> **NOTE**
> The boron concentration is considered equalized between the RCS and the PZR after maximizing spray for at least 5 hours after the desired RCS boron concentration is verified. **[B0361]**

1. **EQUALIZE** boron concentration between the Pressurizer and the RCS as follows:

   a. **ENERGIZE** ALL Pressurizer Backup Heater Banks. ____

   b. **ADJUST** the setpoint of the selected Pressurizer Pressure Controller, 1-PIC-100X **OR** 1-PIC-100Y, to maintain pressure at 2250 PSIA. ____

2. Closely **MONITOR** ALL WRNI channels **AND** do **NOT** exceed a sustained one DPM startup rate. ____

3. **IF** boron dilution of greater than 100 PPM is required,
   THEN DECLARE Mode 2 when boron concentration is within 100 PPM of the ECC. ____

4. **PERFORM** the following:

   a. **CALCULATE** the total gallons of dilution water required. ____

   b. Independently **VERIFY** the total gallons of dilution water required. **[B0270]** ____

6.7.E TAKE THE REACTOR CRITICAL (Continued) **INITIALS**

CAUTION

- At least one RCP shall be running **AND** PZR spray be in operation while dilution is in progress. **[B0271] [B0272]**
- Criticality shall be anticipated when dilution is in progress.

5. **COMMENCE** dilution PER DILUTE MAKEUP MODE (CVCS) section of OI-2B, CVCS BORATION, DILUTION & MAKEUP OPERATIONS. ____

6. **CONSIDER** borating all the Purification IXs to the ECC boron concentration **PER** OI-2D, section titled, EQUALIZE THE PURIFICATION IXs TO THE ECC BORON CONCENTRATION **OR** ECC BORON CONCENTRATION. ____

7. **IF** a boron dilution greater than 800 gallons is required, **THEN PERFORM** the following while diluting the RCS: **[B0061]**

   a. **DILUTE** in two or more equal batches. ____

NOTE

Plant Chemistry requires approximately 45 minutes to obtain a representative boron sample.

   b. **REQUEST** Chemistry to sample RCS boron concentration after each batch. **[B0605]** ____

   c. **IF** the actual RCS boron concentration from the final dilution is **NOT** within 5 PPM of the ECC boron concentration, **THEN ADJUST** the ECC CEA position to the actual RCS boron concentration **PER** NEOP-302. ____

6.7 TAKE THE REACTOR CRITICAL (Continued) **INITIALS**

> **CAUTION**
> When performing a Reactor Startup during a steep Xenon burnout curve time frame, attention should be given to time delays vs the lower critical rod height and potentially going critical on Xenon burnout.

F. **OBSERVE** the following requirements while withdrawing Regulating Groups:

1. **IF** desired,
   THEN ENSURE Electrical Maintenance personnel are available to record Insertion and Withdrawal CEA traces using the COILCET test equipment, **AND** communications are established with the CR. ____ 04601

2. Closely **MONITOR** ALL WRNI channels **AND** CEA positions **AND** SUR meters. ____

3. **ENSURE** that the CEAs are withdrawn in proper sequence **AND** with a minimum of 90 inch overlap, by Secondary Group Position indication. ____

   - **IF** the Plant Computer is **NOT** available,
     THEN the Reactor Operator will maintain the 90 inch overlap. ____

4. **AFTER** each incremental withdrawal,
   THEN TERMINATE CEA motion **AND OBSERVE** flux level until it stabilizes **OR** an observable trend is noted. **[B0032]** ____

6.7.F TAKE THE REACTOR CRITICAL (Continued) **INITIALS**

5. **IF** any of the following conditions exist:

   - The WRNIs and SUR Meters indicate that criticality is going to happen below the ECC Lower Bound CEA Position.
   - It is desired to suspend the startup **AND** recalculate the ECC for any reason.

   THEN PERFORM the following: **[B0032] [B0922]**

   a. **INSERT ALL** Regulating CEAs to the Lower Computer Stop (LCS) using manual sequential. ____

   b. **NOTIFY** the Reactor Engineering Work Group (REWG) that the Regulating CEAs are being inserted to the LCS. ____

   c. **INITIATE** a Condition Report to document any ECC discrepency. ____

   d. **OBTAIN** an adjusted ECC from REWG **PER** NEOP-302. ____

   e. **ENSURE** the following prior to recommencing the reactor startup:

      (1) The error in the ECC process has been determined **AND** understood. ____

      (2) **CONCURRENCE** for reactor startup is received from the Superintendent - Nuclear Operations or his alternate, based on evaluation of core power distributions for reactivity anomalies. ____

6.7.F TAKE THE REACTOR CRITICAL (Continued) **INITIALS**

6. **IF** the WRNIs and SUR Meters indicate that criticality is going to happen above the ECC Upper Bound CEA Position, **THEN PERFORM** the following: **[B0032] [B0922]**

   a. **INSERT** the Regulating CEAs to the Zero Power PDIL CEA Position using manual sequential. ____

   b. **NOTIFY** the Reactor Engineering Work Group (REWG) that the Regulating CEAs are being inserted to the Zero Power PDIL CEA Position. ____

   c. **INITIATE** a Condition Report to document any ECC discrepency. ____

   d. **OBTAIN** an adjusted ECC from REWG **PER** NEOP-302. ____

   e. **ENSURE** the following prior to recommencing the reactor startup:

      (1) The error in the ECC process has been determined **AND** understood. ____

      (2) **CONCURRENCE** for reactor startup is received from the Superintendent - Nuclear Operations or his alternate, based on evaluation of core power distributions for reactivity anomalies. ____

6.7 TAKE THE REACTOR CRITICAL (Continued) **INITIALS**

NOTE

- CEAs should be withdrawn with increments no more than 30 inches in MANUAL SEQUENTIAL.
- The remaining CEAs will **NOT** be withdrawn to the UEL until after the Reactor is critical.

CAUTION

- Do **NOT** exceed a 1 DPM sustained startup rate.
- Criticality shall be anticipated when CEAs are being withdrawn. **[B0032]**
- Withdraw CEAs only in a deliberate and carefully controlled manner. During withdrawal, constantly monitor nuclear instrumentation and redundant indications of reactor power level and neutron flux. **[B0372]**

G. **IF** the Plant Computer **AND** DAS B is available,
THEN WITHDRAW Regulating Groups to achieve criticality as follows:

1. **PLACE** CEAs in MANUAL SEQUENTIAL. ____

NOTE

Withdrawal increments should lessen as the Reactor approaches criticality.

2. **WITHDRAW** Regulating Group 3 to the UCS in equal increments **AND PERFORM** the following: ____
   - **ALLOW** flux level to stabilize after each incremental withdrawal ____
   - **ENSURE** a minimum of 90 inch overlap maintained with Regulating Group 4, by Secondary Group Position indication. ____
   - **IF** flux level is observed to be rising (positive SUR) with NO CEA withdrawal,
     THEN DECLARE the Reactor critical **AND LOG** the time of criticality in the CRO Log Book ____

6.7.G TAKE THE REACTOR CRITICAL (Continued) **INITIALS**

NOTE
Withdrawal increments should lessen as the Reactor approaches criticality.

CAUTION
DO **NOT** EXCEED THE ECC UPPER BOUND CEA POSITION.

3. **IF** the Reactor is **NOT** critical,
THEN WITHDRAW Regulating Group 4 in increments until the reactor is critical **OR** CEA height is at the Upper Computer Stop while PERFORMING the following: ____

   - **ALLOW** flux level to stabilize after each incremental withdrawal ____
   - **ENSURE** a minimum of 90 inch overlap maintained with Regulating Group 5, by Secondary Group Position indication. ____
   - **WHEN** flux level is first observed to be rising (positive SUR) with NO CEA withdrawal,
     THEN DECLARE the Reactor critical **AND LOG** the time of criticality in the CRO Log Book ____

NOTE
Withdrawal increments should lessen as the Reactor approaches criticality.

CAUTION
DO **NOT** EXCEED THE ECC UPPER BOUND CEA POSITION.

4. **IF** the Reactor is **NOT** critical,
THEN WITHDRAW Regulating Group 5 in increments until the reactor is critical **OR** CEA height is at the ECC Upper Bound CEA position while PERFORMING the following: ____

   - **ALLOW** flux level to stabilize after each incremental withdrawal ____
   - **WHEN** flux level is first observed to be rising (positive SUR) with NO CEA withdrawal,
     THEN DECLARE the Reactor critical **AND LOG** the time of criticality in the CRO Log Book ____

6.7 TAKE THE REACTOR CRITICAL (Continued) **INITIALS**

NOTE

- CEAs should be withdrawn with increments no more than 10 inches in MANUAL GROUP.
- The remaining CEAs will **NOT** be withdrawn to the UEL until after the Reactor is critical.

CAUTION

- Do **NOT** exceed a 1 DPM sustained startup rate.
- Criticality shall be anticipated when CEAs are being withdrawn. **[B0032]**
- Withdraw CEAs only in a deliberate and carefully controlled manner. During withdrawal, constantly monitor nuclear instrumentation and redundant indications of reactor power level and neutron flux. **[B0372]**

H. **IF** the Plant Computer **OR** DAS B is **NOT** available,
THEN WITHDRAW Regulating Groups to achieve criticality as follows:

1. **PLACE** CEAs in MANUAL GROUP. ____
2. **SELECT** Regulating Group 3. ____
3. **WITHDRAW** Regulating Group 3 to the UCS in equal increments **AND PERFORM** the following: ____
   - **ALLOW** flux level to stabilize after each incremental withdrawal ____
   - Alternately **SELECT** Regulating Group 4 **AND MAINTAIN** a minimum of 90 inch overlap with Regulating Group 3, by Secondary Group Position indication. ____
   - **IF** flux level is observed to be rising (positive SUR) with NO CEA withdrawal,
     THEN DECLARE the Reactor critical **AND LOG** the time of criticality in the CRO Log Book ____

6.7.H TAKE THE REACTOR CRITICAL (Continued) **INITIALS**

> **NOTE**
> Withdrawal increments should lessen as the Reactor approaches criticality.

> **CAUTION**
> DO **NOT** EXCEED THE ECC UPPER BOUND CEA POSITION.

4. **IF** the Reactor is **NOT** critical,
   THEN WITHDRAW Regulating Group 4 in increments until the reactor is critical **OR** CEA height is at the Upper Computer Stop while PERFORMING the following: ____

   - **ALLOW** flux level to stabilize after each incremental withdrawal ____
   - Alternately **SELECT** Regulating Group 5 **AND MAINTAIN** a minimum of 90 inch overlap with Regulating Group 4, by Secondary Group Position indication. ____
   - **WHEN** flux level is first observed to be rising (positive SUR) with NO CEA withdrawal,
     THEN DECLARE the Reactor critical **AND LOG** the time of criticality in the CRO Log Book ____

> **NOTE**
> Withdrawal increments should lessen as the Reactor approaches criticality.

> **CAUTION**
> DO **NOT** EXCEED THE ECC UPPER BOUND CEA POSITION.

5. **IF** the Reactor is **NOT** critical,
   THEN WITHDRAW Regulating Group 5 in increments until the reactor is critical **OR** CEA height is at the ECC Upper Bound CEA position while PERFORMING the following: ____

   - **ALLOW** flux level to stabilize after each incremental withdrawal ____
   - **WHEN** flux level is first observed to be rising (positive SUR) with NO CEA withdrawal,
     THEN DECLARE the Reactor critical **AND LOG** the time of criticality in the CRO Log Book ____

I. **ENSURE** the CEAs are aligned to the 90 inch overlap requirement, by Secondary Group Position indication. ____

6.7 TAKE THE REACTOR CRITICAL (Continued) **INITIALS**

J. **SECURE** the Shutdown Monitor **PER** OI-30, NUCLEAR INSTRUMENTATION. **[B0138]** ____

K. **IF** RCS T_{COLD} is less than 525° F, **THEN LOG** T_{COLD} in the CRO Log every 30 minutes, in fulfillment of Tech Spec SR 3.4.2.1. **[B0140]** ____

L. **STABILIZE** Reactor power at 10^{-4}% power **AND LOG** the following critical data in the CRO Log Book **AND** on the ECC form: ____

- date and time of critical data ____
- positions of ALL CEA groups ____
- Reactor power ____
- T_{AVG} ____
- RCS boron concentration **[B0605]** ____

M. **CHECK** WRNI channels indicating approximately 10^{-4}% **AND** 1C05 annunciator "S/U RATE TRIP A,B,C,D ENABLE" in alarm. ____

NOTE
The trending range of NRRHO2 (wide range) is from 10^{-5}% to 100% reactor power.

N. **PLACE** NRRHO2 on pen recorder trending **PER** OI-50A, PLANT COMPUTER. ____

O. **NOTIFY** Radiation Safety Supervision that the Reactor is critical at 10^{-4}% power. ____

P. **NOTIFY** Plant Chemistry that they can secure taking 30 minute RCS boron samples. ____

Q. **IF** at **ANY** time, a critical Reactor becomes subcritical as indicated by the following: **[B2412]**

- Reactor power less than 10^{-1}%
- Flux level lowering

THEN FULLY INSERT ALL Regulating CEAs.

6.7 TAKE THE REACTOR CRITICAL (Continued) **INITIALS**

NOTE

Control of ASI may require the use of Regulating Group 4 until approximately 30% Reactor power is reached. Use of Regulating Group 4 will be at the discretion of the Reactor Operator within the Limits of Tech Spec 3.1.6, Regulating CEA Insertion Limits.

CAUTION

- ASI values must be maintained within the limits of NEOP-13, Figure 1-IV A.2. in Mode 1.
- Withdraw CEAs only in a deliberate and carefully controlled manner. During withdrawal, constantly monitor nuclear instrumentation and redundant indications of reactor power level and neutron flux. **[B0372]**

R. **ALIGN** fully withdrawn Regulating Group CEAs to the UEL as follows:

1. **PLACE** CEAs in MANUAL INDIVIDUAL. ____

2. Alternately **SELECT** each individual CEA in Regulating Group 3, **AND WITHDRAW** it to the UEL. ____

   - **CHECK** the UEL Light illuminates as each CEA reaches its UEL. ____
   - **VERIFY** CEAPDS indicates 133"-136" for each CEA as it reaches the UEL. (TRM TNC 15.1.4.a) ____

3. **IF** Regulating Group 4 is fully withdrawn, **THEN** alternately **SELECT** each individual CEA in Regulating Group 4, **AND WITHDRAW** it to the UEL. ____

   - **CHECK** the UEL Light illuminates as each CEA reaches its UEL. ____
   - **VERIFY** CEAPDS indicates 133"-136" for each CEA as it reaches the UEL. (TRM TNC 15.1.4.a) ____

6.7 TAKE THE REACTOR CRITICAL (Continued) **INITIALS**

NOTE
When reactor power is above the point of adding heat (1%), RCS temperature can be controlled by steam demand **OR** CEA adjustment. **[B0240]**

CAUTION
Do **NOT** exceed a sustained one DPM startup rate.

S. **RAISE** Reactor power to approximately 1% by LRNI **AND PERFORM** the following: ____

1. **CHECK** ALL WRNI channels indicating less than 2%. ____

   - **LOG** verification of at least two decades of overlap between the Wide Range Logarithmic Neutron Flux Monitoring Channels and the Power Range Neutron Flux Monitoring Channels. (Tech Spec SR.3.3.1.1 Bases) ____

CAUTION
Linear Range NI channels must be observed on the RPS (1C15), as indication on 1C05 may be indicating ΔT Power **AND NOT** NI Power. **[B2412]**

2. **CHECK** indication on the Linear Range channels beginning to rise. ____

3. **VERIFY** 1C05 digital power indication, 1-XI-5515, is setup **PER** OI-50A, PLANT COMPUTER, for indicating LRNI power. **[B0386]** **[B0032]** ____

NOTE
- The trending range of NRRHO2 (wide range) is from 10^{-5}% to 100% reactor power.
- The trending range of NRRHO1 (linear range) is from 3% to 100% reactor power. NRRHO1 is the preferred point to monitor when reactor power is greater than 3%.

T. **IF** available,
THEN REPLACE NRRHO2 with NRRHO1 on pen recorder trending **PER** OI-50A. ____

6.7 TAKE THE REACTOR CRITICAL (Continued) **INITIALS**

> **CAUTION**
> CEAs shall **NOT** be borated out of the core in Mode 2 unless GS-SO's permission is obtained **AND** a brief is held that establishes power level to be maintained and instrumentation to monitor to ensure power remains greater than the point of adding heat. **[B0386]**

U. **WHEN** maintaining power between 1% and 5% **AND IF** using NR5A for power indication,
THEN periodically **COMPARE** redundant 1C05 power range indications to ensure the highest channel of power does **NOT** exceed 5% power **PRIOR** to declaring Mode 1. ____

****** END ******

6.8 MODE 1 PREPARATIONS

INITIALS

NOTE
Steps in this section may be performed concurrently or in any order.

A. **IF** desired,
THEN PERFORM initial checks and warming of the Main Turbine **PER** the applicable steps of OI-43A, MAIN TURBINE AND GENERATOR/EXCITER OPERATION, as determined by the CRS. ____

B. **REQUEST** Chemistry to confirm that the requirements of CP-204, SPECIFICATION AND SURVEILLANCE - PRIMARY SYSTEMS are satisfied for Mode 1 operation. ____

C. **IF** entering this section from PSTP-2,
THEN SECURE the Shutdown Monitor **PER** OI-30, NUCLEAR INSTRUMENTATION. **[B0138]** ____

D. **IF** the Unit is in ANY Technical Specification Action Statement to which Tech Spec 3.0.4 does allow a mode change,
THEN OBTAIN permission for Mode 1 entry from the M-NO or GS-SO. ____

NOTE
- SGFPs should be shifted to Main and Reheat Steam **PRIOR** to exceeding 5% power.
- GS-SO or M-NO permission is needed to enter Mode 1 with only one SGFP available.

CAUTION
Excessive feeding at low power conditions will affect Tc and Reactivity. PZR level and RCS pressure can be affected. **[B0240]**

E. **IF** only one SGFP is available,
THEN SHIFT the steam supply for the SGFP to Main and Reheat Steam **PER** OI-12A, FEEDWATER SYSTEM. ____

6.8 MODE 1 PREPARATIONS (Continued) **INITIALS**

CAUTION
Excessive feeding at low power conditions will affect Tc and Reactivity. PZR level and RCS pressure can be affected. **[B0240]**

F. **IF** the second SGFP is available for use,
THEN:

1. **STARTUP** the second SGFP aligned to Main and Reheat steam for parallel operation **PER** OI-12A, FEEDWATER SYSTEM. ____

2. **WHEN** BOTH SGFPs are in parallel operation,
THEN PLACE the SGFP that is aligned to Aux Steam in STANDBY with steam supplies aligned to Main and Reheat **PER** OI-12A, FEEDWATER SYSTEM. ____

G. **SHIFT** the Gland Seal Steam supply to Main Steam as follows:

1. **OPEN** MS TO GLAND SEAL, 1-TGS-4659-MOV (1C02). ____

2. **SHUT** AUX STM TO GLAND SEAL SYS, 1-TGS-4678-MOV (1C02). ____

3. **CHECK** steam seal header pressure between 2 and 6 PSIG on 1-PI-4664. ____

NOTE
The use of the TBVs to help control RCS temperature should be utilized during the power escalation until approximately 30% power is obtained.

H. **VERIFY** the TBVs are opening to control RCS temperature between 525° F and 535° F. **[B0240]** ____

- To lower Tc:
  - Raise steam demand

  OR

  - Lower reactor power by inserting CEAs.

- To raise Tc:
  - Reduce steam demand

  OR

  - Raise reactor power by withdrawing CEAs

6.8 MODE 1 PREPARATIONS (Continued) **INITIALS**

CAUTION

CEAs shall **NOT** be borated out of the core in Mode 2 unless GS-SO's permission is obtained **AND** a brief is held that establishes power level to be maintained and instrumentation to monitor to ensure power remains greater than the point of adding heat. **[B0386]**

I. **IF** reactor power is to be held below 5%,
THEN the CRS may **DIRECT** that the portions of OI-43A, MAIN TURBINE AND GENERATOR/EXCITER OPERATION, that deal with initial checks and warming of the Main Turbine, may be performed at this time. ____

NOTE

Computer point EC933 is the preferred method of monitoring ASI when Reactor Power is less than or equal to 20%. When less than 20%, the RPS APD calculator will give an inaccurate ASI value.

J. **IF** available, **MONITOR** ASI using EC933 until Reactor Power is greater than 20%. ____

K. **IF** desired,
THEN ENSURE Electrical Maintenance personnel are available to record Insertion and Withdrawal CEA traces using the COILCET test equipment, **AND** communications are established with the CR. ____ 04601

****** END ******

6.9 MODE 1 ENTRY **INITIALS**

A. **COMMENCE** monitoring Reactor power using the highest Power Range channel (Q_{max}), 1-JI-005 through 1-JI-008. ____

B. **RAISE** Reactor power to 5% **AND** **DECLARE** Mode 1. ____

- **LOG** the time of Mode 1 entry in the CRO Log Book. ____
- **IF** reactor power is unintentionally lowered to less than 5% (Mode 2),
  THEN:
  1. **STABILIZE** the plant in Mode 2. ____
  2. **VERIFY** Mode 1 requirements are met. ____
  3. **OBTAIN** the GS-SO's permission prior to re-entry into Mode 1. ____

C. **STOP** the WRNI chart recorder. ____

D. **VERIFY** 1C05 digital power indication, 1-XI-5515, is setup **PER** OI-50A section titled PEN RECORDER TRENDING, subsection titled, 1(2)C05 POWER INDICATION, XI-5515, for indicating ΔT power. **[B0386]** ____

E. **NOTIFY** Chemistry to confirm that the requirements CP-217, SPECIFICATIONS AND SURVEILLANCE - SECONDARY CHEMISTRY are satisfied prior to 15% Reactor power. ____

6.9 MODE 1 ENTRY (Continued) **INITIALS**

F. **RAISE** Reactor power to between 10 and 12%. ____

1. **RECORD** NI power, Delta T power and Reactor Reg power. ____

	A (X)	B (Y)	C	D
NI POWER				
ΔT POWER				
RR POWER			XXXXXXX	XXXXXXX

NOTE

- When nulling NI pots, the possibility exists that the pot may reach its hard stop before the NUCLEAR POWER-ΔT POWER deviation meter reaches zero.
- Tech Spec 3.3.1 requires the Axial Power Distribution Trip and the Loss of Load Trip to be active when NUCLEAR INSTRUMENT POWER is ≥ 15% RTP.

2. **WHEN** Reactor power is between 10 and 12%,
THEN NULL the NI pot for each channel that NI power is reading less than Delta-T power **PER** OI-30, section titled, NULLING NI POTS TO DELTA T POTS. **[B0412]** ____

   a. **IF** the NI pot is completely run out **AND** the NUCLEAR ΔT CH DEVIATION alarm on 1C05 is clear,
   THEN PROCEED to Step 3. ____

   b. **IF** the NI pot is completely run out **AND** the NUCLEAR ΔT CH DEVIATION alarm on 1C05 is **NOT** clear,
   THEN INITIATE a CR **AND NOTIFY** the System Engineer before continuing with the startup. ____

3. **IF** the absolute difference between Reactor Reg power and RPS power is greater than 2%,
THEN ADJUST the Reactor Reg NIs **PER** OI-30, NUCLEAR INSTRUMENTATION, section titled, REACTOR REGULATING SYSTEM NI CHANNEL ADJUSTMENT DURING STARTUP. ____

6.9.F MODE 1 ENTRY (Continued) **INITIALS**

NOTE
Allowing the Turbine Bypass Valves to modulate while the Main Turbine is initially being loaded provides smoother control of RCS temperature. This aids in operations where precise temperature control is desired (e.g.; when the Reactor has a positive MTC).

4. **LOWER** the setpoint on the TBV Controller, 1-PIC-4056, to allow the Turbine Bypass Valves to modulate while the Main Turbine is being loaded, but **NOT** less than 830 PSIA. ____

5. **ENSURE** ALL Main Turbine bearing temperature **AND** vibration detectors are operable **PRIOR** to rolling the Main Turbine **OR OBTAIN** permission to waive this requirement from the M-NO or GS-SO. ____

6. **START UP** the Main Turbine **PER** OI-43A, MAIN TURBINE AND GENERATOR/EXCITER OPERATION. ____

CAUTION
ASI values must be maintained within the limits of NEOP-13, Figure 1-IV A.2. in Mode 1.

G. **COMMENCE** raising Reactor power **AND LOAD** the Turbine Generator with the following requirements: ____

1. **MAINTAIN** RCS T_{COLD} within 2° F of programmed T_{COLD} of FIGURE 1. ____

   - **IF** RCS T_{COLD} deviates greater than 2° F from programmed T_{COLD},
     THEN INITIATE actions to restore T_{COLD} **AND NOTIFY** the CRS. **[B0240]** ____

     - To lower Tc:

       - Raise steam demand

       OR

       - Lower reactor power by inserting CEAs.

     - To raise Tc:

       - Reduce steam demand

       OR

       - Raise reactor power by withdrawing CEAs

6.9.G MODE 1 ENTRY (Continued) **INITIALS**

2. IF Thermal Power has changed by greater than or equal to 15% RTP within a 1 hour period,
THEN **NOTIFY** Chemistry to:

   - **SAMPLE** the RCS **PER** Tech Spec SR 3.4.15.2 ____

   - IF required **PER** ODCM SR 4.11.2.1.2,
THEN **SAMPLE** the Main Vent Effluent. ____

H. PRIOR to NUCLEAR INSTRUMENT POWER exceeding 15% RTP, **PERFORM** the following: **[B0412]**

1. **CHECK** 1C05 annunciator "LOSS OF LOAD CH TRIP BYPASS" clears, indicating the Loss of Load Trip Bypass has automatically reset. ____

2. **CHECK** ALL four RPS channel Linear Power Drawer LEVEL 1 and LEVEL 2 lights illuminated, indicating the Axial Power Distribution Trip Bypass has automatically reset. ____

3. **CHECK** 1C05 annunciator "S/U RATE TRIP A,B,C,D ENABLED" clears, indicating the Startup Rate Trips are bypassed. ____

4. **CHECK** both RRS channel LRNI drawer LEVEL 1 and LEVEL 2 lights illuminated. ____

CAUTION
Withdraw CEAs only in a deliberate and carefully controlled manner. **[B0372]**

I. **CONSIDER** placing the CEAs in the ARO position by performing the following: **[B0386]**

   - **RAISE** the RCS boron concentration either by fast borating or borated makeup mode to the VCT **PER** OI-2B, CVCS BORATION, DILUTION & MAKEUP OPERATIONS. ____

   - **WITHDRAW** CEAs is small and controlled increments. ____

   - **MAINTAIN** reactor power approximately the same while borating the RCS and withdrawing CEAs. ____

   - **MONITOR** all available nuclear instrumentation and redundant indications of reactor power and neutron flux. **[B0372]** ____

6.9 MODE 1 ENTRY (Continued) **INITIALS**

J. **VERIFY** Plant Heating Condensate returns are aligned as desired **PER** OI-40: ____

- COND RETN TO 11 COND, 0-PH-486.
- COND RETN TO 21 COND, 0-PH-487.
- PLANT HTNG SYS COND RETURN TO DEAERATOR STOP VLV, 0-AHB-208.

K. **GO TO** OP-3, NORMAL POWER OPERATION, to increase power above 15%. ____

****** END ******

7.0 POST PERFORMANCE ACTIVITIES

A. **WHEN** completed,
THEN FORWARD the original procedure to the Operations Senior Administrative Assistant for retention **PER** PR-3-100, RECORDS MANAGEMENT.

8.0 BASES

[B0012] Response to CCER 88-05 to caution about the effect temperature has on LRNI indication at low power.

[B0032] Response to SOER 88-02, requires the use of additional reactivity monitoring to prevent premature criticality.

[B0050] Specifies actions to prevent criticality below ZPDIL.

[B0061] Response to SER 13-90, expect criticality whenever the RCS is diluted by 800 gallons or more.

[B0071] Response to SOER 90-3, ensure nuclear instrumentation calibrated prior to power increase.

[B0138] Response to NUMARC 91-06, Shutdown Management and Safety.

[B0140] Response to GL 92-01, concerns on neutron embrittlement and pressurized thermal shock.

[B0232] SER 5-94, requires cycling the MSIVs at NOP and NOT to ensure no mechanical binding when the valve is heated up to operating temperature and pressure.

[B0240] Response to SOER 94-01, RCAR 95-02 & LER 95-003, Added guidance for controlling Tc when at a no load condition.

[B0270] Operator Reactivity Management Procedure Review Guidelines. Letter from B. Shick to M. Navin 9-22-95

[B0271] This is in response to SOER 94-02, recommendation 4.a: Identify procedure activities that can result in low concentrated borated water being transported to the RCS.

[B0272] SOER 94-02, The requirement to keep an RCP running and PZR spray in operation while doing any RCS boration or dilution is to assure adequate RCS mixing to prevent diluted pockets. However, plant conditions are such that it is not always possible to assure that RCPs are running. In these cases it is possible to minimize the probability of diluted pockets during Natural Circulation cooldown or during SDC operation.

[B0350] Appendix R requirements to maintain breakers open to prevent maloperation.

8.0 BASES (Continued)

[B0361] ES199601370 & NEU 96-266, Maximize pressurizer spray for at least 5 hours after the desired RCS boron concentration is verified to equalize RCS/PZR boron concentration. This is based on flushing approximately 3 volumes of PZR water to the RCS main loop.

[B0372] SOER 96-01, Control Room Supervision, Operational Decision-Making and Teamwork. Recommendations 1.b for management of the Control Room enviroment to minimize distractions **AND** 2.a & 4.a, "Control Rods".

[B0386] Response to Issue Report, IR199602030, when SUR Pre-trip alarms were observed while borating the CEAs out of the core when the reactor was critical at a low power (just below the POAH). During this evolution **NOT** all indications were being monitored.

[B0404] Response to SOER 96-02 Rec #4, Establish, define and communicate the roles and responsibilities of reactor engineering personnel and appropriate interfaces with the Control Room staff such that reactor engineers provide the necessary technical support during evolutions that affect the reactor core.

[B0412] Corrective action of LER #97-004 to null the NI power pots to Delta-T power at approximately 10% power on a reactor startup and 20% power during shutdown. This is to ensure LOL, SUR Rate and Axial Power Distribution Trips are either bypassed or reset prior to exceeding Tech Spec values as appropriate.

[B0604] Memo (NFM 00-012) from M.W. Dicus providing a breakpoint in core cycle (12,000 MWD/MTU) after which more stringent ASI controls must be used.

[B0605] Memo from the boronometer removal task force that describes increased RCS boron sampling requirements due to the removal of the boronometer.

[B0668] Response to IR3-055-619 to allow a band of 5 PPM between the boron sample and calculated ECC boron.

[B0922] SOER 03-2, Managing Core Design Changes.

[B2412] SOER 07-01, Reactivity Management.

9.0 RECORDS

A. Records generated by this procedure shall be transmitted to Records Management **PER** PR-3-100, RECORDS MANAGEMENT.

10.0 ATTACHMENTS

A. FIGURE 1, PROGRAMMED T_{COLD} CURVE

10.0 ATTACHMENTS (Continued)

B. APPENDIX 1, COUNT RATE DOUBLING METHOD OF REACTIVITY MONITORING

C. APPENDIX 2, 1/M METHOD OF REACTIVITY MONITORING

D. ATTACHMENT 1, FEEDWATER HTR AND MSR HIGH LEVEL DUMP STARTUP ALIGNMENT

PROGRAMMED T COLD CURVE

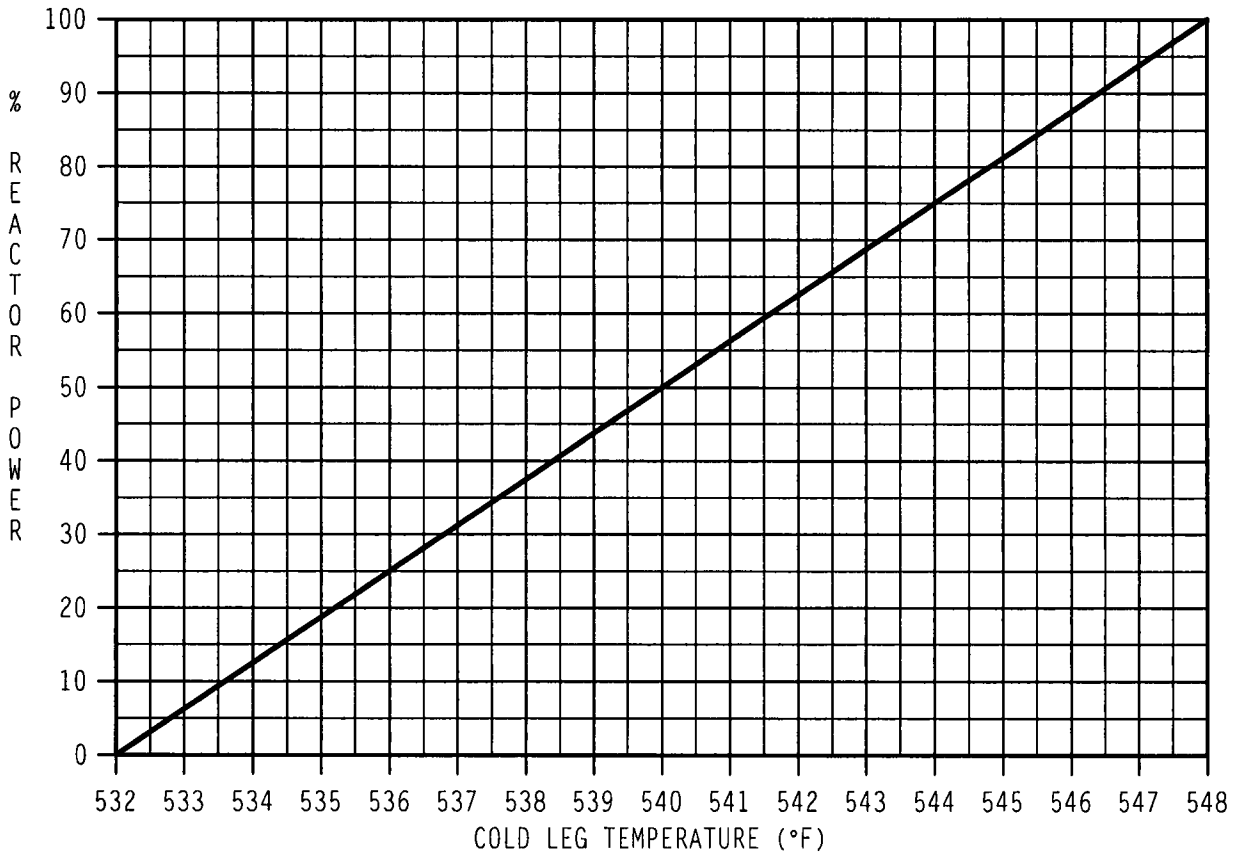

PROGRAMMED TCOLD DATA TABLE

% POWER	TCOLD	% POWER	TCOLD
0	532	55	540.8
5	532.8	60	541.6
10	533.6	65	542.4
15	534.4	70	543.2
20	535.2	75	544
25	536	80	544.8
30	536.8	85	545.6
35	537.6	90	546.4
40	538.4	95	547.2
45	539.2	100	548
50	540		

COUNT RATE DOUBLING METHOD OF REACTIVITY MONITORING

A. DISCUSSION

During a normal approach to Reactor criticality, the neutron countrate increases approximately by a factor of 32. This countrate change is referred to as doubling and is equivalent to five doublings of the countrate ($2^5 = 32$). The alarm function of the Shutdown Monitor resets to 1.5 times the existing countrate each time the reset button is depressed. The number of resets which are required of the Shutdown Monitor is an indication of the core reactivity state and is related to countrate doubling as follows:

$$(2^5)=32=(1.5^X),\ (X)\mathrm{Ln}(1.5)=\mathrm{Ln}(32),\ X = \frac{\mathrm{Ln}(32)}{\mathrm{Ln}(1.5)} = 8.54$$

Therefore, eight resets of the Shutdown Monitor is equivalent to five doublings of the countrate and an indication that the Reactor K_{eff} is approaching one.

B. PROCEDURE

1. **ENSURE** the Shutdown Monitor in service.

2. **RESET** the Shutdown Monitor **AND MARK** an X over reset number 0 in the Reset Table below.

3. **WHEN** the Shutdown Monitor alarms during the approach to criticality, **THEN RESET** the Shutdown Monitor **AND MARK** an X over the next sequential reset number in the Reset Table below.

SDM RESET TABLE

___	___	___	___	___	___	___	___	___
0	1	2	3	4	5	6	7	8

NOTE

WHEN the reset number reaches eight,
THEN, in theory and assuming the Shutdown Monitor is functioning properly, the Reactor should be critical.

1/M METHOD OF REACTIVITY MONITORING [B0032]

NOTE
The Plant Computer 1/M function is preferred over the manual 1/M method, if available.

A. **IF** RCS dilution is in progress,
THEN PERFORM the following for every 1000 gallons of demineralized water added to the RCS:

1. **SELECT** two WRNI channels to monitor.
2. **OBSERVE AND RECORD** the initial countrate (CR_I) of each selected channel.
3. **ALLOW** the countrate to stabilize after each batch dilution.
4. **OBSERVE** the countrate (CR) on each selected WRNI channel.
5. **DIVIDE** CR_I by CR to obtain the 1/M value.

1/M METHOD OF REACTIVITY MONITORING [B0032]

6. **PLOT** the 1/M value against the RCS dilution volume on the RCS DILUTION 1/M PLOT.

RCS DILUTION 1/M PLOT

WRNI Channel____|____

Initial Countrate____|____

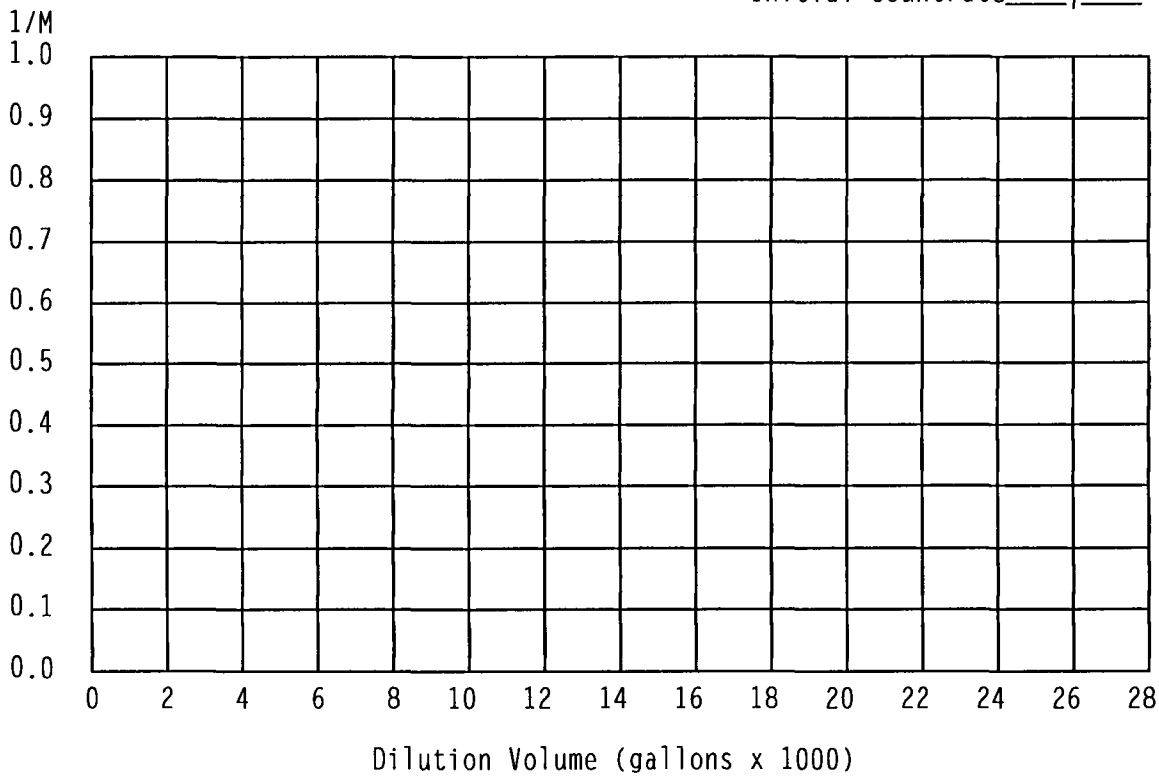

1/M METHOD OF REACTIVITY MONITORING [B0032]

B. **IF** CEA withdrawal is in progress,
THEN PERFORM the following for each incremental withdrawal:

1. **SELECT** two WRNI channels to monitor.
2. **OBSERVE AND RECORD** the initial countrate (CR_I) of each selected channel.
3. **ALLOW** the countrate to stabilize.
4. **OBSERVE** the countrate (CR) on each selected WRNI channel.
5. **DIVIDE** CR_I by CR to obtain the 1/M value.

1/M METHOD OF REACTIVITY MONITORING [B0032]

6. **PLOT** the 1/M value against the Regulating Group position on the CEA WITHDRAWAL 1/M PLOT.

CEA WITHDRAWAL 1/M PLOT

WRNI Channel____|____

Initial Countrate____|____

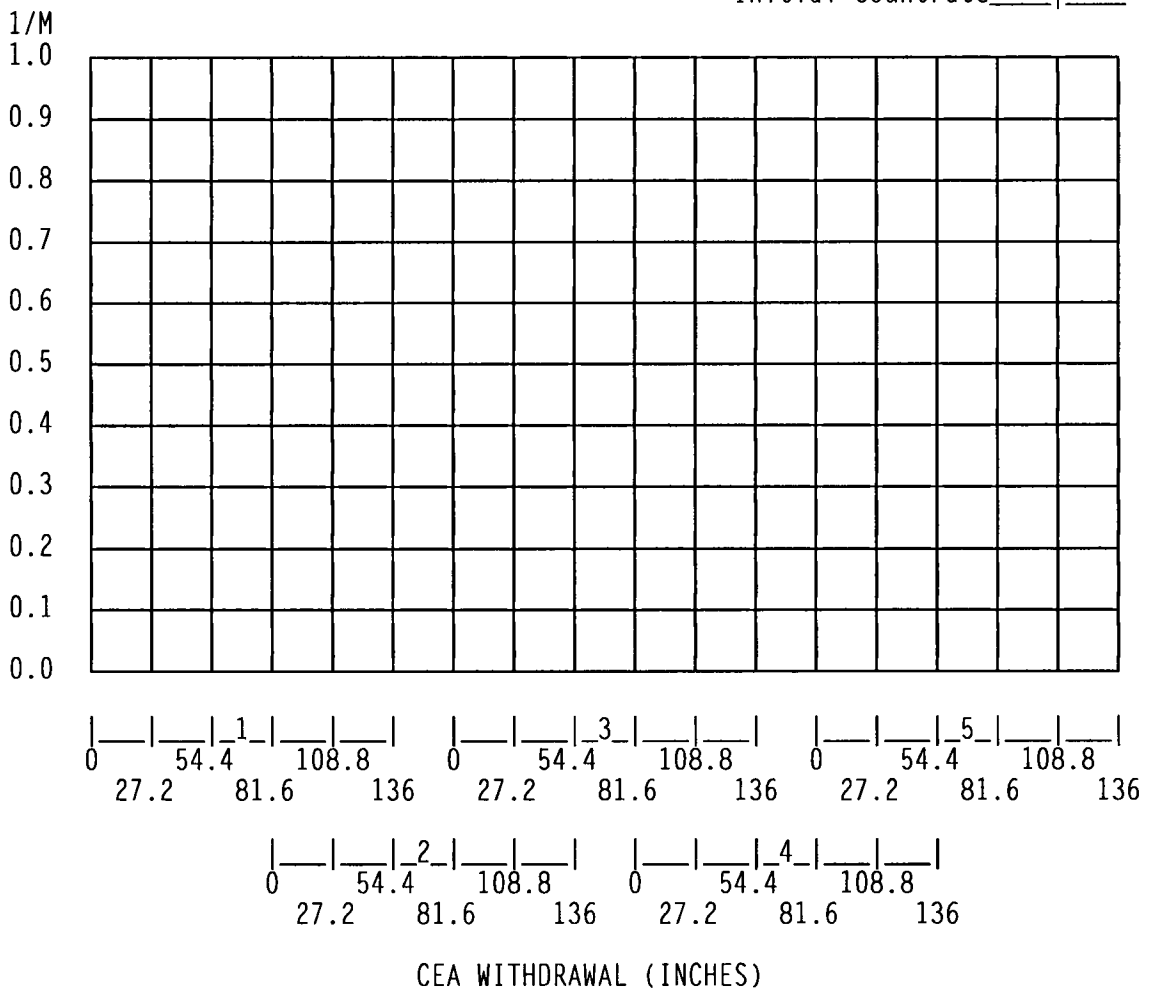

ATTACHMENT 1
FEEDWATER HTR AND MSR HIGH LEVEL DUMP STARTUP ALIGNMENT

VALVE NUMBER	STARTUP/ NORMAL OP. POS	DESCRIPTION	LOCATION	INIT/ DATE	COMMENTS
1-RDV-104	OPEN	INLET 11 MSR DRN TK HI LVL DUMP 13 COND	5' TB W 11 MSR DRN TK		
1-RDV-106	OPEN	STOP 11 MSR DRN TK HI LVL DUMP 13 COND	S END 13 COND		
1-RDV-122	OPEN	INLET 12 MSR DRN TK HI LVL DUMP	SE UNDER 12 MSR DRN TK		
1-RDV-124	OPEN	STOP 12 MSR DRN TK TO 13 COND	S END 13 COND		
1-HDV-144	OPEN	11 HDT HI LVL DUMP	PIT W SIDE CONDR		
1-HDV-155	OPEN	12 HDT HI LVL DUMP	PIT W SIDE		
1-HDV-156	OPEN	16A FWH HI LVL DUMP TO 13 COND	PIT		
1-HDV-157	OPEN	16B FWH HI LVL DUMP TO 13 COND	PIT		
1-HDV-158	OPEN	15A FWH HI LVL DUMP TO 12 COND	PIT NW CORNER OF 12 CONDR		
1-HDV-159	OPEN	15B FWH HI LVL DUMP TO 12 COND	PIT SW CORNER OF 12 CONDR		

ATTACHMENT 1
FEEDWATER HTR AND MSR HIGH LEVEL DUMP STARTUP ALIGNMENT

VALVE NUMBER	STARTUP/ NORMAL OP. POS	DESCRIPTION	LOCATION	INIT/ DATE	COMMENTS
1-HDV-165	OPEN	13A FWH HI LVL DUMP TO 11 COND	5' BY 11 CAR		
1-HDV-173	OPEN	13B FWH HI LVL DUMP TO 11 COND	5' BY 11 CAR		
1-HDV-182	OPEN	12 A FWH HI LVL DUMP TO 11 COND	27' E UNDER DECK		
1-HDV-188	OPEN	12B FWH HI LVL DUMP TO 12 COND	27" E UNDER DECK		
1-HDV-194	OPEN	12C FWH HI LVL DUMP TO 13 COND	27" E UNDER DECK		
1-HDV-200	OPEN	11A FWH HI LVL DUMP TO 11 COND	12' NE CORNER OF 11 CONDR		
1-HDV-206	OPEN	11B FWH HI LVL DUMP TO 12 COND	12' E OF 12 CONDR		
1-HDV-212	OPEN	11C FWH HI LVL DUMP TO 13 COND	12' E OF 13 CONDR		

CALVERT CLIFFS NUCLEAR POWER PLANT

UNIT TWO

OP-2

PLANT STARTUP FROM HOT STANDBY TO MINIMUM LOAD

REVISION 45

SAFETY RELATED

REFERENCE USE

APPROVAL AUTHORITY: Kent Mills

Effective Date: 1/27/2010

LIST OF EFFECTIVE PAGES

PAGE NUMBER	REVISION
1-57	45
FIGURE	
1, PAGE 1	45
APPENDIX	
1, PAGE 1 2, PAGES 1-4	45
ATTACHMENT	
1, PAGES 1-3	45

PROCEDURE ALTERATIONS

PAGE NUMBER	REV/CHG
20,21,25,35,49	04502

TABLE OF CONTENTS

	TITLE	PAGE
1.0	PURPOSE	4
2.0	APPLICABILITY/SCOPE	4
3.0	REFERENCES AND DEFINITIONS	5
4.0	PREREQUISITES	7
5.0	PRECAUTIONS	10
6.0	PROCEDURE	12
6.1	QUICK TRIP RECOVERY	12
6.2	PREPARE SECONDARY SYSTEMS FOR STARTUP	14
6.3	PREPARE PRIMARY SYSTEMS FOR STARTUP	18
6.4	REFUELING OUTAGE STARTUP	20
6.5	WITHDRAW SHUTDOWN CEA GROUPS	21
6.6	WITHDRAW REGULATING CEA GROUPS ABOVE ZPDIL	25
6.7	TAKE THE REACTOR CRITICAL	32
6.8	MODE 1 PREPARATIONS	46
6.9	MODE 1 ENTRY	50
7.0	POST PERFORMANCE ACTIVITIES	55
8.0	BASES	55
9.0	RECORDS	56
10.0	ATTACHMENTS	56

1.0 PURPOSE

A. This procedure provides direction to take the Reactor critical (Mode 2) from Hot Standby (Mode 3), raising Reactor power to 5% (Mode 1) then escalating Reactor power to 15%.

2.0 APPLICABILITY/SCOPE

A. This procedure may be used to perform the following evolutions:

- Take the Reactor critical **AND** remain in Mode 2
- Take the Reactor critical **AND** escalate power to 5% and enter Mode 1

B. Steps in PSTP-2 prevent premature criticality below ZPDIL during the initial reactor startup after refueling.

C. To prevent premature criticality below ZPDIL, this procedure directs a reactor startup other than the inital startup after refueling in the following sequence:

1. Ensure RCS boron concentration is at least at the ECC concentration.
2. Withdraw Shutdown Groups.
3. Withdraw Regulating Groups to 90 inches on Group 3.
4. If required, dilute RCS boron concentration to ECC concentration.
5. Withdraw Regulating Groups until the Reactor is critical.

D. Initial Reactor startup following a refueling outage is performed under the direction of the on-shift NFM Shift Engineer (NFM-SE) **PER** PSTP-2, INITIAL APPROACH TO CRITICALITY AND LOW POWER PHYSICS TESTING PROCEDURE **AND** ETP 99-15R, CEDM PERFORMANCE TESTING. **[B0404]**

E. Effective use of this procedure requires that Operations Management review plant status for system availability and out-of-service components that would impact plant startup by entering Technical Specification Action Statements or prohibit system operation. Operations management must determine that adequate equipment is available and that actions are in place to return to service those components needed later during the start-up.

2.0 APPLICABILITY/SCOPE (Continued)

F. This procedure shall be used as follows:

1. With the approval of the CRS or SM, two or more steps within a section may be performed concurrently **OR** out of order. The steps must be evaluated in the sequence listed **AND** be determined not to be dependent upon the actions of other steps within that section.

2. With the approval of the CRS or SM, a step may be delayed **OR** not performed if equipment availability prevents its immediate performance. The step must be evaluated in the sequence listed **AND** determined not to impact the performance of the startup by prohibiting integrated plant operation **OR** entry into Technical Specification Action Statements to which L.C.O. 3.0.4 applies.

3. When encountering a step whose actions have already been performed (e.g.; step says to start a pump and the pump is already running), equipment status shall be reviewed to ensure that existing conditions meet the intent of the step, and with the concurrence of the CRS or SM the step may be signed off.

4. Conditional steps (if, then) may be marked N/A if the condition does not exist or apply.

5. Steps with initial spaces shall be initialed when completed.

6. This procedure is used in conjunction with OP-6 in order to perform a plant start-up. System lineups in OP-6 shall be completed, or have GS-SO exemption, for the systems required to support startup as they are called upon in this procedure.

7. This procedure may be used in conjunction with OP-1 and OP-7 when performing a plant start-up. When OP-1 or OP-7 is the controlling document, performance of steps in this OP shall be evaluated by the CRS or SM.

3.0 REFERENCES AND DEFINITIONS

3.1 DEVELOPMENTAL REFERENCES

A. Technical Specifications

B. P&IDs

1. OM-460 (62-729E), REACTOR COOLANT SYSTEM

2. OM-461 (62-730E), CHEMICAL & VOLUME CONTROL SYSTEM

3. OM-462 (62-731E), SAFETY INJECTION & CONTAINMENT SPRAY SYSTEMS

3.2 PERFORMANCE REFERENCES

A. OI-2B, CVCS Boration, Dilution and Makeup Operations

B. OI-8A, Blowdown System

C. OI-8B, Feedwater Heater Vents and Drains

D. OI-8C, Main Steam and Moisture Separator Reheater Vents and Drains

E. OI-8D, Moisture Separator/Reheater Operation

F. OI-12A, Feedwater System

G. OI-13, Condenser Air Removal

H. OI-30, Nuclear Instrumentation

I. OI-32A, Auxiliary Feedwater System

J. OI-42, CEDM System Operation

K. OI-43A, Main Turbine and Generator/Exciter Operation

L. OP-6, Pre-Startup Checkoff

M. NEOP-302, Estimated Critical Condition

N. NEOP-23, Technical Data Book

O. CP-204, Specifications and Surveillance - Primary Systems

P. CP-217, Specifications and Surveillance - Secondary Chemistry

Q. NO-1-100, Conduct Of Operations

R. NO-1-200, Control of Shift Activities

S. NO-1-111, Post-Trip Review

T. STP O-6-2, RPS Startup Test

U. STP O-62-2, Monthly Valve Position Verification

V. STP O-94A-2, Coolant Loop Operability Verification (Mode 3)

W. PE 2-48-1-O-SA, Diverse Scram System Logic Test

X. CNG-PR-3.01-1000, Records Management

Y. PSTP-2, INITIAL APPROACH TO CRITICALITY AND LOW POWER PHYSICS TESTING PROCEDURE

Z. ETP 99-15R, CEDM PERFORMANCE TESTING

3.3 DEFINITIONS

A. ZPDIL: Zero Power Dependent Insertion Limit as stated in NEOP-23 TECHNICAL DATA BOOK.

4.0 PREREQUISITES

NOTE

The prerequisites of this section are **NOT** required to be completed prior to performing Section 6.2. The prerequisites are specifically for withdrawing CEA's and taking the Reactor critical.

A. **DETERMINE** the usage of this procedure as follows: (check one)

☐ **IF** this is a shutdown of less than 36 hours
OR
as determined by the GS-SO,
THEN PERFORM a **QUICK TRIP RECOVERY, AND** N/A Section 6.4.

☐ **IF** this startup follows a shutdown of greater than 36 hours, **AND** is **NOT** a refueling outage,
THEN PERFORM a **NORMAL PLANT STARTUP, AND** N/A Sections 6.1 and 6.4.

NOTE

PSTP-2 will normally leave the reactor CRITICAL with ALL Regulating CEAs withdrawn. At this point the operator will continue with OP-2 with Section 6.8, MODE 1 PREPARATIONS, **AND** N/A Sections 6.6 and 6.7.

☐ **IF** this startup is the initial approach to criticality following a refueling outage,
THEN PERFORM a **REFUELING OUTAGE STARTUP, AND** N/A Sections 6.1 and 6.5.

4.0 PREREQUISITES (Continued)

B. **ENSURE** the following conditions are satisfied:

- Unit 2 is in Mode 3 ____
- T_{COLD} is greater than 525° F **[B0140]** ____
- Pressurizer pressure is between 2225 and 2275 PSIA ____
- Pressurizer level is being maintained with a setpoint of 160 inches ____
- All CEAs are fully inserted ____
- RC Waste has sufficient capacity for RCS dilution ____

NOTE

The boron concentration is considered equalized between the RCS and the PZR after maximizing spray for at least 5 hours after the desired RCS boron concentration is verified. **[B0361]**

- PZR Spray is being maximized to equalize the boron concentration between the RCS and PZR. ____
- **VERIFY** 2C05 digital power indication, 2-XI-5515, is setup **PER** OI-50A, PLANT COMPUTER, for indicating WRNI power. **[B0386] [B0032]** ____

C. **REQUEST** Chemistry to confirm that the requirements of CP-204, SPECIFICATION AND SURVEILLANCE - PRIMARY SYSTEMS **AND** CP-217, SPECIFICATIONS AND SURVEILLANCE - SECONDARY CHEMISTRY are satisfied **PRIOR** to taking the Reactor critical. ____

D. **CHECK** with NFM to ensure the reactivity calculator that feeds computer points, NRRHO1 and NRRHO2, is available for startup. ____

4.0 PREREQUISITES (Continued)

E. **IF** performing a **QUICK TRIP RECOVERY OR** a **NORMAL PLANT STARTUP, THEN CALCULATE** an Estimated Critical Condition (ECC) **PER** NEOP-302, using the following CEA target position:

1. **IF** this startup is greater than 24 hours since the Reactor trip **AND** Core burnup is less than 12,000 MWD/MTU,
   THEN CEA target position shall be between 45 and 90 inches on Regulating Group 4. **[B0604]** ____

NOTE
Startup with Regulating Group 4 at 90 inches provides adequate margin for ASI control using CEAs.

2. **IF** this startup is less than 24 hours since the Reactor trip **OR** Core burnup is greater than 12,000 MWD/MTU,
   THEN CEA target position shall be 90 inches on Regulating Group 4. **[B0604]** ____

3. **ENSURE** RCS boron concentration is sufficient to provide shutdown margin as require by Tech Spec 3.1.1,NEOP-301 and 302, **AND** is **NOT** less than the ECC boron concentration. **[B0605]** ____

4. **IF** core burnup is less than or equal to 1,000 MWD/MTU,
   THEN CONTACT NFM to determine whether a RCS boron concentration limit exists to ensure MTC is within the limits of Tech Spec 3.1.3. ____

F. **ENSURE** the following dedicated operators are assigned for the Unit startup: **[B0372]**

- An SRO to supervise the plant startup ____
- A Licensed Operator for starting up and paralleling the Main Turbine at 2C02 (when directed by the dedicated SRO) ____
- A Licensed Operator to operate Main Feedwater at 2C03 (when directed by the dedicated SRO) ____

G. **REQUEST** the dedicated SRO to brief the RO, CRO and any additional licensed operators on the monitoring of diverse indications of reactor power **AND** actions to be taken in response to discrepancies between indications. This brief shall include the anticipation of and indications of reactor criticality. **[B0071] [B0270]** ____

- **COMMENCE** performing this briefing for successive shift turnovers until power is raised above 30% **AND** an NI calibration has been completed. **[B0071]**

5.0 PRECAUTIONS

A. Criticality shall be anticipated whenever: **[B0270]**

- CEAs are being withdrawn
- Boron dilution is in progress
- Heatup or Cooldown operations are performed during Reactor startup
- Xenon burnout in progress, less than 84 hrs from shutdown

B. **WHEN** any of the above evolutions are taking place,
THEN all available instrumentation should be used to monitor the approach to criticality to allow for errors in the ECC or problems with the instrumentation. **[B0032] [B0270]**

C. Inadequate control of reactivity has the potential for damaging the core. Reliance on safety system actuation reduces the margin of safety. Conservative actions and strict compliance with written procedures are necessary when re-positioning control rods. **[B0032] [B0270]**

D. Activities that can distract operators and supervisors involved with a reactor startup, such as shift turnover and surveillance testing during the approach to criticality, shall be avoided. Control Room access will be controlled **PER** NO-1-100, CONDUCT OF OPERATIONS. **[B0032]**

E. The Linear Range Nuclear Instruments (LRNIs) are subject to error when RCS temperature varies from the temperature at which the LRNIs were calibrated. Due to the large temperature changes that occur when changing power, RPS Delta T Power should be used as the primary power indication until the LRNIs are re-calibrated at the new steady state RCS temperature. Comparisons shall periodically be made between all four RPS channels and to the plant computer as indicated on the Two Minute Reactor Thermal Output, PA911. **[B0012] [B0270]**

F. **WHEN** changing RCS boron concentration,
THEN VERIFY that at least one RCP is running **AND** PZR spray is in operation until the desired boron concentration has been **REACHED AND VERIFIED** **[B0271] [B0272]**

G. Reactivity changes can be monitored using the plant computer points NRRHO1 (measured power range 3% - 100%) or NRRHO2 (measured power range 10^{-5}% - 100%) These points are to be used for **TRENDING** reactivity only. For reactor startups that are controlled by PSTP-2; the on-shift NFM-SE will provide the necessary guidance using the various plant computer points. **[B0404] [B0922]**

H. To prevent overpressurizing the piping between the SGFP discharge valve and the discharge check valve, do **NOT** start one SGFP with the other SGFP's discharge valve shut **UNLESS** the isolated SGFP is tagged out **PER** OI-12A, FEEDWATER SYSTEM, APPENDIX C, SGFP TAGOUT.

5.0 PRECAUTIONS (Continued)

I. Primary plant anomalies caused by secondary plant transients are rarely, if ever, successfully mitigated by adding positive reactivity, especially by withdrawing CEAs. Do **NOT** use CEAs to control RCS temperature without an approved procedure. **[B0372]**

J. When preparing to take the Reactor Critical, Boron samples shall be within 5 ppm of ECC boron concentration. ECC may be adjusted for present Boron sample. **[B0668]**

K. **IF** at **ANY** time, a critical Reactor becomes subcritical as indicated by the following: **[B2412]**

- Reactor power less than 10^{-1}%
- Flux level lowering

THEN FULLY INSERT ALL Regulating CEAs.

6.0 PROCEDURE

INITIALS

NOTE
This section provides a mechanism for a quick return to power following a reactor shutdown that does **NOT** require lengthy follow-up actions, maintenance or calibration of RPS cabinets or associated sensors.

6.1 QUICK TRIP RECOVERY

A. **CHECK** the following:

- The unit has been shutdown for less than 36 hours **OR** GS-SO approval has been obtained. ____
- The cause of the reactor trip does **NOT** require any maintenance **OR** calibration to be performed on the RPS Cabinets or associated sensors ____

B. **ENSURE** a post-trip review satisfactorily completed **PER** NO-1-111, POST-TRIP REVIEW. ____

C. **LIST** all Technical Specification Action Statements that are in effect **AND** the resolution to allow change to Mode 2:

ACTION STATEMENT	RESOLUTION

D. **OBTAIN** GS-SO permission to perform a quick trip recovery. ____

E. **REVIEW** OP-3, NORMAL POWER OPERATION, **AND** OP-4, PLANT SHUTDOWN FROM POWER OPERATION TO HOT STANDBY, **AND** **ENSURE** steps supporting plant shutdown are performed. ____

F. **PERFORM** a containment closeout inspection **PER** OP-6, PRE-STARTUP CHECKOFF, Section 6.6, Quick Trip Recovery Containment Closeout Inspection. ____

6.1 QUICK TRIP RECOVERY (Continued) **INITIALS**

G. **IF** STP O-6-2, RPS STARTUP TEST, has **NOT** been performed within the last 7 days,
THEN PERFORM STP O-6-2. ____

H. **IF** PE 2-48-1-O-SA, DIVERSE SCRAM SYSTEM LOGIC TEST (OI-34), has **NOT** been performed within the last 6 months,
THEN PERFORM PE 2-48-1-O-SA. ____

I. **PERFORM** STP O-62-2, MONTHLY VALVE POSITION VERIFICATION, for Modes 1 and 2. ____

J. **PERFORM** a detailed walkdown of the Control Room Panels. ____

K. **REVIEW** all Control Room Deficiency Tags, POTTS Tags and Temporary Notes to ensure that any Mode 1 or Mode 2 operability concerns they track are resolved. ____

NOTE
STP O-94A-2, COOLANT LOOP OPERABILITY VERIFICATION (MODE 3), should have been performed when the Unit entered Mode 3 from Mode 2.

L. **ENSURE** STP O-94A-2, COOLANT LOOP OPERABILITY VERIFICATION (MODE 3), satisfactorily completed. ____

M. **CHECK** the following:

- The ΔT Power calibration potentiometers on all 4 RPSCIP drawers are within the range specified in the Setpoint File. ____
- The NI Power calibration potentiometers on all 4 RPSCIP drawers are set at the AS LEFT VALUE of the most recent Excore NI calibration (CRO Log **OR** STP M-213-2). ____

CAUTION
When performing a Reactor Startup during a steep Xenon burnout curve time frame, attention should be given to time delays vs the lower critical rod height and potentially going critical on Xenon burnout.

N. **CHECK** that the actual time of criticality will be within two hours of the estimated time of criticality of the ECC. ____

- **IF NOT**,
THEN PERFORM another ECC that uses a more accurate time of criticality. ____

****** END ******

NOTE
This section is independent and may be performed concurrently with the remainder of the procedure.

6.2 PREPARE SECONDARY SYSTEMS FOR STARTUP — INITIALS

NOTE
IF performing a Quick Trip Recovery,
THEN OP-6, Section 6.4 need **NOT** be completed.

A. **IF** this is **NOT** a Quick Trip Recovery,
THEN ENSURE OP-6, Section 6.4 is initiated. ____

B. **IF** Condenser vacuum is **NOT** established **AND** it is **NOT** expected to be drawn for some time,
THEN ALIGN the High Pressure Steam Drains to the STARTUP position **PER** OI-8C, MAIN STEAM AND MSR VENTS AND DRAINS, until Condenser vacuum is drawn. ____

C. **IF** Condenser vacuum is **NOT** established **AND** sufficient equipment is available,
THEN DRAW Condenser vacuum **PER** OI-13, CONDENSER AIR REMOVAL. ____

NOTE
The remaining steps in this section are performed ONLY after Condenser vacuum is drawn.

D. **ALIGN** the High Pressure Steam Drains to the NORMAL OPERATING position **PER** OI-8C, MAIN STEAM AND MSR VENTS AND DRAINS. (N/A if Condenser Vacuum has **NOT** been broken or was previously established **AND** High Pressure Steam Drains are aligned to the NORMAL OPERATING position **PER** MAIN STEAM **AND** MSR VENTS **AND** DRAINS). ____

E. **START UP** Main Feedwater **PER** OI-12A, FEEDWATER SYSTEM. ____

F. **ENSURE** the Plant Computer point PAVFTKB, PA911VFT MANUAL CORRECTION FACTOR is set at 1.00159. ____

G. **SECURE** Auxiliary Feedwater **PER** OI-32A, AUXILIARY FEEDWATER SYSTEM. ____

H. **IF** required **OR** directed by Chemistry,
THEN PLACE Blowdown in service **PER** OI-8A, BLOWDOWN SYSTEM. ____

6.2 PREPARE SECONDARY SYSTEMS FOR STARTUP (Continued) **INITIALS**

I. **IF** the MSIVs are shut,
THEN PERFORM the following:

1. **CLOSE** the power supply breakers to the MSIV Bypass valves:

   - MAIN STEAM VALVE 21 BYPASS 2-MOV-4045, 52-21428 ____
   - MAIN STEAM VALVE 22 BYPASS 2-MOV-4052, 52-20428 ____

2. **OPEN** the MSIV bypass valves to start warming the Main Steam headers:

   - 21 MSIV BYP, 2-MS-4045-MOV ____
   - 22 MSIV BYP, 2-MS-4052-MOV ____

3. **CYCLE** MS UPSTREAM DRN VLVS, 2-HS-6622, as necessary to prevent excessive blowdown of the Main Steam header. ____

4. **CHECK** Main Steam header pressure stabilized within 100 PSID of Steam Generator pressure. ____

   - **IF** necessary to lower the ΔP across the MSIVs,
     THEN SHUT selected High Pressure Drains until the ΔP is within 100 PSID. ____

5. **OPEN** 21 and 22 MSIVs:

   - 21 MSIV, 2-MS-4043-CV ____
   - 22 MSIV, 2-MS-4048-CV ____

6. **SHUT** 21 and 22 MSIV Bypass valves:

   - 21 MSIV BYP, 2-MS-4045-MOV ____
   - 22 MSIV BYP, 2-MS-4052-MOV ____

7. **OPEN** the power supply breakers to the MSIV Bypass valves:
   [B0350]

   - MAIN STEAM VALVE 21 BYPASS 2-MOV-4045, 52-21428 ____
   - MAIN STEAM VALVE 22 BYPASS 2-MOV-4052, 52-20428 ____

6.2 PREPARE SECONDARY SYSTEMS FOR STARTUP (Continued) **INITIALS**

J. **IF** maintenance was performed on a MSIV,
THEN CYCLE MSIVs as follows:
(N/A if MSIVs have been cycled previously at NOP/NOT post-maintenance) **[B0232]**

1. **CLOSE** the power supply breakers to the MSIV Bypass valves:

   - MAIN STEAM VALVE 21 BYPASS 2-MOV-4045, 52-21428 ____
   - MAIN STEAM VALVE 22 BYPASS 2-MOV-4052, 52-20428 ____

2. **OPEN** both MSIV Bypass Valves, 2-MS-4045-MOV and 2-MS-4052-MOV. ____

3. **SHUT** both MSIVs. ____

4. **ADJUST** the ADVs as necessary to obtain the desired steaming rate. ____

5. **OPEN** both MSIVs ____

6. **WHEN** both MSIVs are fully open,
   THEN SHUT the MSIV Bypass Valves. ____

7. **OPEN** the power supply breakers to the MSIV Bypass valves: **[B0350]**

   - MAIN STEAM VALVE 21 BYPASS 2-MOV-4045, 52-21428 ____
   - MAIN STEAM VALVE 22 BYPASS 2-MOV-4052, 52-20428 ____

K. **SHIFT** temperature control of the RCS to the Turbine Bypass Valves as follows:

> **NOTE**
> Performing the next two steps simultaneously provides a smooth transfer of RCS temperature control.

- **PLACE** TBV CONTR, 2-PIC-4056, in AUTO with a target setpoint of 900 PSI **AND ADJUST** the setpoint as necessary to maintain T_{COLD} at 532° F. ____

- **SHUT** the Atmospheric Steam Dumps **AND PLACE** ADV CONTR, 2-HIC-4056, in AUTO. ____

L. Locally **CHECK** 26A and 26B Feedwater Heater Shell levels. ____

- **IF** 26A and 26B Feedwater Heaters levels are **NOT** approximately 5 inches,
  THEN FILL them to approximately 5 inches **PER** OI-8B, FEEDWATER HEATER VENTS AND DRAINS. ____

6.2 PREPARE SECONDARY SYSTEMS FOR STARTUP (Continued) **INITIALS**

M. **ENSURE** Extraction Line Drains are aligned for STARTUP OPERATION **PER** OI-8C, MAIN STEAM AND MSR VENTS AND DRAINS. ____

> **NOTE**
> The remaining steps are required to be completed **PRIOR** to rolling the Main Turbine **AND** may be performed concurrently or in any order.

N. **PREPARE** the MSRs **PRIOR** to rolling the Main Turbine **PER** OI-8D, MOISTURE SEPARATOR/REHEATER OPERATION. ____

O. **CYCLE** all Feedwater Heater High Level Dump Valves using their handswitches on 2C03. ____

- **ENSURE** 21 and 22 Low Pressure Feedwater Heater High Level Dump Valve handswitches on 2C03 returned to OPEN. ____

P. **ENSURE** the Intermediate Drains are aligned for STARTUP operation **PER** OI-8C, MAIN STEAM AND MSR VENTS AND DRAINS. ____

Q. **ENSURE** Feedwater Heater Vents and Drains are aligned for the STARTUP position **PER** OI-8B, FEEDWATER HEATER VENTS AND DRAINS. ____

R. **ENSURE** the Feedwater HTR and MSR High Level Dump Isolation Valves are aligned to the STARTUP position **PER** ATTACHMENT 1, FEEDWATER HTR AND MSR HIGH LEVEL DUMP STARTUP ALIGNMENT. ____

S. **ENSURE** 26A and 26B Feedwater Heater Normal Level Control Valve Isolation Valves are shut **PRIOR** to rolling the Main Turbine:

- STOP 26A FWH DRN TO 25A HTR, 2-HDV-109 ____
- STOP 26B FWH DRN TO 25B HTR, 2-HDV-114 ____

T. **COMPLETE** the Initial Conditions for Turbine Startup **PER** OI-43A, MAIN TURBINE & GENERATOR/EXCITER OPERATION. ____

****** END ******

6.3 PREPARE PRIMARY SYSTEMS FOR STARTUP — INITIALS

A. **IF** the Technical Support Center Computer is **NOT** available, **THEN NOTIFY** the GS-SO. ____

B. **VERIFY** TCB-9 is closed. ____

C. **STARTUP OR VERIFY** the Control Element Drive System is in operation **PER** OI-42, CEDM SYSTEM OPERATION. ____

D. **STARTUP OR VERIFY** the CEA Motor Generator Sets are in operation **PER** OI-42, CEDM SYSTEM OPERATION. ____

E. **ENSURE** TCB-1 through TCB-8 are shut. ____

F. **CHECK** ALL 2C15E **AND** 2C15F mimic panel Phase Current indicating lights illuminated. ____

G. **RESET** ALL CEDM Coil Power Programmer Backup Power Supplies (located on the back of the CEDM Coil Programmer panels, Unit 2 Cable Spreading Room). ____

H. **RESET** ALL 4 TURBINE UV sensor modules. ____

1. **CHECK** the ZB TURBINE UV logic module reset. ____

2. **CHECK** the 2C05 annunciator "REACTOR TRIP BUS U/V RELAY TRIP" clears. ____

I. **VERIFY** proper operation of the Turbine Control system **PER** OI-43A, MAIN TURBINE AND GENERATOR/EXCITER OPERATION, Section titled VERIFICATION OF TURBINE CONTROL SYSTEM PRIOR TO STARTUP. ____

J. **IF** STP O-6-2, RPS STARTUP TEST, has **NOT** been performed within the last 7 days, **THEN PERFORM** STP O-6-2. ____

NOTE

- **IF** performing a Quick Trip Recovery, **THEN** OP-6, Section 6.4 need **NOT** be completed.
- If performing PSTP-2, it will direct when OP-6 Section 6.4 must be completed, prior to entry into MODE 2.

K. **IF** this is **NOT** a Quick Trip Recovery, **OR** if **NOT** performing PSTP-2, INITIAL APPROACH TO CRITICALITY AND LOW POWER PHYSICS TESTING PROCEDURE, **THEN ENSURE** OP-6, Section 6.4 is complete. ____

6.3 PREPARE PRIMARY SYSTEMS FOR STARTUP (Continued) **INITIALS**

NOTE
The VCT level should be maintained low in the band to accommodate the inventory from RCP bleedoff if Fast Boration is required.

L. **MAINTAIN** VCT level low in the band until the CEAs are above ZPDIL (54.4 inches on Group 3). ____

****** END ******

6.4 REFUELING OUTAGE STARTUP

INITIALS

A. **ENSURE** the NFM-SE and Shift Manager have briefed the dedicated SRO, CRO, RO and any additional licensed operators on the conditions and responses expected while taking the Reactor critical. **[B0270] [B0404]** ____

- **COMMENCE** performing this briefing for successive shift turnovers until the NFM-SE is complete with PSTP-2 **AND** this section is exited. **[B0404]**

B. **ENSURE** NO RCS boron dilution evolutions in progress. **[B0270]** ____

C. **ENSURE** RCS boron concentration is at least 150 PPM greater than ECC concentration. **[B0605]** ____

D. **SUSPEND** evolutions that may affect RCS temperature and add reactivity to the core. **[B0270]** ____

E. **ENSURE** ALL 4 ZERO POWER MODE bypass keyswitches in OFF (located on the RPS cabinets). ____

F. **IF** desired,
THEN ENSURE Electrical Maintenance personnel are available to record Insertion and Withdrawal CEA traces using the COILCET test equipment, **AND** communications are established with the CR. ____ 04502

G. **PERFORM** a Reactor start-up and testing under the direction of the NFM-SE **PER** PSTP-2, INITIAL APPROACH TO CRITICALITY AND LOW POWER PHYSICS TESTING PROCEDURE and ETP 99-15R, CEDM PERFORMANCE TESTING. ____

H. GO TO Section 6.8, MODE 1 PREPARATIONS. ____

****** END ******

6.5 WITHDRAW SHUTDOWN CEA GROUPS

INITIALS

A. IF at any time the Reactor reaches criticality below ZPDIL (54.4 inches on Group 3),
THEN **PERFORM** the following: **[B0032][B0050]**

1. Immediately **INITIATE** Fast Boration of the RCS to raise boron concentration by the following amount: ____

GROUP BEING WITHDRAWN WHEN CRITICAL	INCREASE BORON CONCENTRATION BY
GROUP A	900 PPM
GROUP B or C	800 PPM

2. **SHIFT** the VCT Inlet valve, 2-CVC-500-CV, to the WPS position. ____

3. **TRIP** the Reactor **AND IMPLEMENT** EOP-0, POST-TRIP IMMEDIATE ACTIONS. ____

B. IF desired,
THEN **ENSURE** Electrical Maintenance personnel are available to record Insertion and Withdrawal CEA traces using the COILCET test equipment, **AND** communications are established with the CR. ____ 04502

C. **IMPLEMENT** at least one of the following reactivity monitoring methods: **[B0032] [B0270]** ____

- Countrate Doubling **PER** APPENDIX 1
- 1/M **PER** APPENDIX 2
- 1/M plotting on the Plant Computer

D. **ENSURE** the requirements of Tech Spec 3.1.4, 3.1.5 and 3.1.6 for Reactivity Control, and TRM 15.1.4 for CEA Position Indication, are met when withdrawing CEAs. ____

6.5 WITHDRAW SHUTDOWN CEA GROUPS (Continued) **INITIALS**

NOTE

All CEAs in a group should be aligned to the same height prior to group withdrawal to help prevent CEA deviation alarms when withdrawing the group.

CAUTION

- Criticality shall be anticipated when CEAs are being withdrawn. **[B0032]**
- Withdraw CEAs only in a deliberate and carefully controlled manner. During withdrawal, constantly monitor nuclear instrumentation and redundant indications of reactor power level and neutron flux. **[B0372]**

E. **WITHDRAW** Shutdown CEAs approximately 4.5 inches to clear the Dropped CEA light (amber light) and prevent nuisance PDIL alarms as follows:

1. **PLACE** CEAs in MANUAL GROUP. ____
2. **SELECT** Shutdown Group A. ____
3. **WITHDRAW** ALL Shutdown Group A CEAs approximately 4.5 inches. ____
4. **SELECT** Shutdown Group B. ____
5. **WITHDRAW** ALL Shutdown Group B CEAs approximately 4.5 inches. ____
6. **SELECT** Shutdown Group C. ____
7. **WITHDRAW** ALL Shutdown Group C CEAs approximately 4.5 inches. ____

6.5 WITHDRAW SHUTDOWN CEA GROUPS (Continued) **INITIALS**

CAUTION

- Criticality shall be anticipated when CEAs are being withdrawn. **[B0032]**
- Do **NOT** exceed a sustained one DPM startup rate.
- Withdraw CEAs only in a deliberate and carefully controlled manner. During withdrawal, constantly monitor nuclear instrumentation and redundant indications of reactor power level and neutron flux. **[B0372]**
- When performing a Reactor Startup during a steep Xenon burnout curve time frame, attention should be given to time delays vs the lower critical rod height and potentially going critical on Xenon burnout.

F. Fully **WITHDRAW** Shutdown CEAs as follows:

1. **PLACE** CEAs in MANUAL GROUP. ____
2. **SELECT** Shutdown Group A. ____
3. **WITHDRAW** Shutdown Group A to the Upper Computer Stop (UCS). ____
4. **PLACE** CEAs in MANUAL INDIVIDUAL. ____
5. Alternately **SELECT** each individual CEA in Shutdown Group A, **AND WITHDRAW** it to the Upper Electrical Limit (UEL). ____
   - **CHECK** the UEL Light illuminates as each CEA reaches its UEL. ____
   - **VERIFY** CEAPDS indicates 133"-136" for each CEA as it reaches the UEL. (TRM TNC 15.1.4.a) ____
6. **PLACE** CEAs in MANUAL GROUP. ____
7. **SELECT** Shutdown Group B. ____
8. **WITHDRAW** Shutdown Group B to the UCS. ____
9. **PLACE** CEAs in MANUAL INDIVIDUAL. ____

6.5.F WITHDRAW SHUTDOWN CEA GROUPS (Continued) **INITIALS**

10. Alternately **SELECT** each individual CEA in Shutdown Group B, **AND WITHDRAW** it to the UEL. ____
    - **CHECK** the UEL Light illuminates as each CEA reaches its UEL. ____
    - **VERIFY** CEAPDS indicates 133"-136" for each CEA as it reaches the UEL. (TRM TNC 15.1.4.a) ____
11. **PLACE** CEAs in MANUAL GROUP. ____
12. **SELECT** Shutdown Group C. ____
13. **WITHDRAW** Shutdown Group C to the UCS. ____
14. **PLACE** CEAs in MANUAL INDIVIDUAL. ____
15. Alternately **SELECT** each individual CEA in Shutdown Group C, **AND WITHDRAW** it to the UEL. ____
    - **CHECK** the UEL Light illuminates as each CEA reaches its UEL. ____
    - **VERIFY** CEAPDS indicates 133"-136" for each CEA as it reaches the UEL. (TRM TNC 15.1.4.a) ____
16. **WHEN** ALL Shutdown Groups are at their UEL, **THEN UPDATE** their primary indications on the Plant Computer to 135 inches. ____
17. **LOG** in the CRO Log Book that ALL Shutdown CEAs are fully withdrawn. ____

****** END ******

6.6 WITHDRAW REGULATING CEA GROUPS ABOVE ZPDIL

INITIALS

A. IF at any time the Reactor reaches criticality below ZPDIL (54.4 inches on Group 3),
THEN **PERFORM** the following: **[B0032][B0050]**

1. Immediately **INITIATE** Fast Boration of the RCS to raise boron concentration by the following amount: ____

GROUP BEING WITHDRAWN WHEN CRITICAL	INCREASE BORON CONCENTRATION BY
GROUP 1	800 PPM
GROUP 2 or 3	200 PPM

2. **SHIFT** the VCT Inlet valve, 2-CVC-500-CV, to the WPS position. ____

3. **TRIP** the Reactor **AND IMPLEMENT** EOP-0, POST-TRIP IMMEDIATE ACTIONS. ____

B. **OBSERVE** ALL four WRNI channel readings.

- IF any WRNI indicates less than 0.2 CPS,
THEN **REQUEST** the NFM-SE for direction on performing a modified approach to criticality. ____

- IF using the manual 1/M reactivity monitoring method,
THEN **RECORD** the lowest count rate in Appendix 2. ____

C. IF desired,
THEN **ENSURE** Electrical Maintenance personnel are available to record Insertion and Withdrawal CEA traces using the COILCET test equipment, **AND** communications are established with the CR. ____ 04502

D. **NOTIFY** Radiation Safety Supervision that the Reactor is being taken critical. ____

E. **ENSURE** ALL 4 ZERO POWER MODE bypass keyswitches in OFF (located on the RPS cabinets). ____

F. **ENSURE** NO RCS boron dilution evolutions in progress. ____

G. **REQUEST** Plant Chemistry to begin sampling RCS boron every 30 minutes **AND RECORD** the results in the CRO Log. **[B0605]** ____

H. **SUSPEND** evolutions that may affect RCS temperature and add reactivity to the core. ____

6.6 WITHDRAW REGULATING CEA GROUPS ABOVE ZPDIL (Continued) **INITIALS**

CAUTION
ALL Shutdown CEAs shall be fully withdrawn **PRIOR** to Regulating Group withdrawal.

I. **IF** the RCS boron concentration is within 100 PPM of ECC boron concentration,
THEN LOG the RCS T_{COLD} every 30 minutes in the CRO's log book, while withdrawing Regulation Group CEAs.
(Tech Spec SR 3.4.2.1) ____

NOTE
All CEAs in a group should be aligned to the same height prior to group withdrawal to help prevent CEA deviation alarms when withdrawing the group.

CAUTION
- Criticality shall be anticipated when CEAs are being withdrawn. **[B0032]**
- Withdraw CEAs only in a deliberate and carefully controlled manner. During withdrawal, constantly monitor nuclear instrumentation and redundant indications of reactor power level and neutron flux. **[B0372]**
- When performing a Reactor Startup during a steep Xenon burnout curve time frame, attention should be given to time delays vs the lower critical rod height and potentially going critical on Xenon burnout.

J. **WITHDRAW** Regulating CEAs approximately 4.5 inches to clear the Dropped CEA light (amber light) and prevent nuisance PDIL alarms as follows:

1. **PLACE** CEAs in MANUAL GROUP. ____
2. **SELECT** Regulating Group 1. ____
3. **WITHDRAW** ALL Regulating Group 1 CEAs approximately 4.5 inches. ____
4. **SELECT** Regulating Group 2. ____
5. **WITHDRAW** ALL Regulating Group 2 CEAs approximately 4.5 inches. ____
6. **SELECT** Regulating Group 3. ____
7. **WITHDRAW** ALL Regulating Group 3 CEAs approximately 4.5 inches. ____
8. **SELECT** Regulating Group 4. ____

6.6.J **WITHDRAW REGULATING CEA GROUPS ABOVE ZPDIL (Continued)** **INITIALS**

9. **WITHDRAW** ALL Regulating Group 4 CEAs approximately 4.5 inches. ____

10. **SELECT** Regulating Group 5. ____

11. **WITHDRAW** ALL Regulating Group 5 CEAs approximately 4.5 inches. ____

K. **ENSURE** at least one of the following reactivity monitoring methods is in use: **[B0032]** ____

- Countrate Doubling **PER** APPENDIX 1
- 1/M **PER** APPENDIX 2
- 1/M plotting on the Plant Computer

L. **PLACE** the WRNI chart recorder paper speed in FAST. ____

M. **OBSERVE** the following requirements while withdrawing Regulating Groups:

1. Closely **MONITOR** ALL WRNI channels **AND** CEA positions. ____

2. **ENSURE** that the CEAs are withdrawn in proper sequence **AND** with a minimum of 90 inches overlap indicated by Secondary Group Position indication. ____

   a. **IF** less than 90 inch overlap between groups exist, **THEN USE** Manual Group to restore the 90 inch overlap. ____

3. **AFTER** each incremental withdrawal, **THEN TERMINATE** CEA motion **AND OBSERVE** flux level until it stabilizes **OR** an observable trend is noted. **[B0032]** ____

6.6 WITHDRAW REGULATING CEA GROUPS ABOVE ZPDIL (Continued) **INITIALS**

NOTE

- MANUAL SEQUENTIAL is the preferred method for Regulating Group withdrawal.
- CEAs should be withdrawn with increments no more than 30 inches in MANUAL SEQUENTIAL.

CAUTION

- Criticality shall be anticipated when CEAs are being withdrawn. **[B0032]**
- Do **NOT** exceed a 1 DPM sustained startup rate.
- Withdraw CEAs only in a deliberate and carefully controlled manner. During withdrawal, constantly monitor nuclear instrumentation and redundant indications of reactor power level and neutron flux. **[B0372]**

N. **IF** the Plant Computer **AND** DAS B is available, **THEN WITHDRAW** Regulating Groups to 90 inches on Group 3 as follows:

1. **PLACE** CEAs in MANUAL SEQUENTIAL. ____
2. **WITHDRAW** Regulating Group 1 to the UCS in equal increments **AND PERFORM** the following: ____
   - **ALLOW** flux level to stabilize after each incremental withdrawal ____
   - **ENSURE** a minimum of 90 inch overlap maintained with Regulating Group 2, by Secondary Group Position indication. ____
3. **PLACE** CEAs in MANUAL INDIVIDUAL. ____
4. Alternately **SELECT** each individual CEA in Regulating Group 1 **AND WITHDRAW** it to the Upper Electrical Limit (UEL). ____
   - **CHECK** the UEL Light illuminates as each CEA reaches its UEL. ____
   - **VERIFY** CEAPDS indicates 133"-136" for each CEA as it reaches the UEL. (TRM TNC 15.1.4.a) ____
5. **PLACE** CEAs in MANUAL SEQUENTIAL. ____

6.6.N WITHDRAW REGULATING CEA GROUPS ABOVE ZPDIL (Continued) **INITIALS**

6. **WITHDRAW** Regulating Group 2 to the UCS in equal increments **AND PERFORM** the following: ____

   - **ALLOW** flux level to stabilize after each incremental withdrawal ____

   - **ENSURE** a minimum of 90 inch overlap maintained with Regulating Group 3, by Secondary Group Position indication. ____

7. **PLACE** CEAs in MANUAL INDIVIDUAL. ____

8. Alternately **SELECT** each individual CEA in Regulating Group 2 **AND WITHDRAW** it to the UEL. ____

   - **CHECK** the UEL Light illuminates as each CEA reaches its UEL. ____

   - **VERIFY** CEAPDS indicates 133"-136" for each CEA as it reaches the UEL. (TRM TNC 15.1.4.a) ____

9. **PLACE** CEAs in MANUAL SEQUENTIAL. ____

10. **WITHDRAW** Regulating Group 3 to 90 inches in equal increments **AND PERFORM** the following: ____

    - **ALLOW** flux level to stabilize after each incremental withdrawal ____

    - **IF** RCS boron concentration is within 100 PPM of ECC boron concentration,
      THEN DECLARE Mode 2 when Group 3 CEAs reach ZPDIL (54.4). ____

    - **ENSURE** a minimum of 90 inch overlap maintained with Regulating Group 4, by Secondary Group Position indication. ____

6.6 WITHDRAW REGULATING CEA GROUPS ABOVE ZPDIL (Continued) **INITIALS**

NOTE
When Reg Group 1 is greater than 90 inches withdrawn, CEAs SHALL be withdrawn with increments no more than 10 inches in MANUAL GROUP to maintain proper overlap.

CAUTION
- Criticality shall be anticipated when CEAs are being withdrawn. **[B0032]**
- Do **NOT** exceed a 1 DPM sustained startup rate.
- Withdraw CEAs only in a deliberate and carefully controlled manner. During withdrawal, constantly monitor nuclear instrumentation and redundant indications of reactor power level and neutron flux. **[B0372]**

O. **IF** the Plant Computer **OR** DAS B is **NOT** available, **THEN WITHDRAW** Regulating Groups to 90 inches on Group 3 as follows:

1. **PLACE** CEAs in MANUAL GROUP. ____

2. **WITHDRAW** Regulating Group 1 to the UCS in equal increments **AND PERFORM** the following: ____
   - **ALLOW** flux level to stabilize after each incremental withdrawal ____
   - Alternately **SELECT** Regulating Group 2 **AND MAINTAIN** a minimum of 90 inch overlap with Regulating Group 1, by Secondary Group Position indication. ____

3. **PLACE** CEAs in MANUAL INDIVIDUAL. ____

4. Alternately **SELECT** each individual CEA in Regulating Group 1 **AND WITHDRAW** it to the Upper Electrical Limit (UEL). ____
   - **CHECK** the UEL Light illuminates as each CEA reaches its UEL. ____
   - **VERIFY** CEAPDS indicates 133"-136" for each CEA as it reaches the UEL. (TRM TNC 15.1.4.a) ____

5. **PLACE** CEAs in MANUAL GROUP. ____

6. **WITHDRAW** Regulating Group 2 to the UCS in equal increments **AND PERFORM** the following: ____
   - **ALLOW** flux level to stabilize after each incremental withdrawal ____
   - Alternately **SELECT** Regulating Group 3 **AND MAINTAIN** a minimum of 90 inch overlap with Regulating Group 2, by Secondary Group Position indication. ____

6.6.O WITHDRAW REGULATING CEA GROUPS ABOVE ZPDIL (Continued) **INITIALS**

7. **PLACE** CEAs in MANUAL INDIVIDUAL. ____

8. Alternately **SELECT** each individual CEA in Regulating Group 2 **AND WITHDRAW** it to the UEL. ____

   - **CHECK** the UEL Light illuminates as each CEA reaches its UEL. ____
   - **VERIFY** CEAPDS indicates 133"-136" for each CEA as it reaches the UEL. (TRM TNC 15.1.4.a) ____

9. **PLACE** CEAs in MANUAL GROUP. ____

10. **WITHDRAW** Regulating Group 3 to 90 inches in equal increments **AND PERFORM** the following: ____

    - **ALLOW** flux level to stabilize after each incremental withdrawal ____

    - **IF** RCS boron concentration is within 100 PPM of ECC boron concentration,
      THEN DECLARE Mode 2 when Group 3 CEAs reach ZPDIL (54.4). ____

P. **UPDATE** Regulating Group 1 **AND** 2 primary indications on the Plant Computer to 135 inches. ____

****** END ******

6.7 TAKE THE REACTOR CRITICAL

INITIALS

A. **CHECK** that the predicted critical CEA position is between the Long Term Steady State Insertion Limit and the Transient Insertion Limit of Tech Spec 3.1.6 within the following time **PRIOR** to taking the Reactor critical: ____

- Normal reactor startup: 4 hours
- Quick Trip Recovery: 2 hours

B. **ENSURE** at least one of the following reactivity monitoring methods is in use: **[B0032]** ____

- Countrate Doubling **PER** APPENDIX 1
- 1/M **PER** APPENDIX 2
- 1/M plotting on the Plant Computer

1. **UPDATE** the countrate baseline data. ____

> **NOTE**
> Maintaining RCS T_{COLD} greater than 525° F when the Reactor is critical reduces Reactor Vessel neutron embrittlement. **[B0140]**

C. **CHECK** RCS T_{COLD} at least 525° F within 30 minutes **PRIOR** to taking the Reactor critical. **[B0140]** ____

- **LOG** fulfillment of Tech Spec SR 3.4.2.1 in the CRO Log Book. ____
- **COMMENCE** logging RCS T_{COLD} once every 30 minutes in the CRO Log Book until the reactor is critical. ____

D. **ENSURE** the WRNI chart recorder paper speed in FAST. ____

6.7 TAKE THE REACTOR CRITICAL (Continued) **INITIALS**

E. **IF** the actual RCS boron concentration is **NOT** within 5 PPM of ECC boron concentration,
THEN PERFORM the follows: **[B0668]**

- **ADJUST** the ECC CEA position for the actual RCS boron concentration **PER** the NEOP-302. ____

OR

- **DILUTE** the RCS to ECC boron concentration as follows:

> **NOTE**
> The boron concentration is considered equalized between the RCS and the PZR after maximizing spray for at least 5 hours after the desired RCS boron concentration is verified. **[B0361]**

1. **EQUALIZE** boron concentration between the Pressurizer and the RCS as follows:

   a. **ENERGIZE** ALL Pressurizer Backup Heater Banks. ____

   b. **ADJUST** the setpoint of the selected Pressurizer Pressure Controller, 2-PIC-100X **OR** 2-PIC-100Y, to maintain pressure at 2250 PSIA. ____

2. Closely **MONITOR** ALL WRNI channels **AND** do **NOT** exceed a sustained one DPM startup rate. ____

3. **IF** boron dilution of greater than 100 PPM is required,
   THEN DECLARE Mode 2 when boron concentration is within 100 PPM of the ECC. ____

4. **PERFORM** the following:

   a. **CALCULATE** the total gallons of dilution water required. ____

   b. Independently **VERIFY** the total gallons of dilution water required. **[B0270]** ____

6.7.E TAKE THE REACTOR CRITICAL (Continued) **INITIALS**

CAUTION

- At least one RCP shall be running **AND** PZR spray be in operation while dilution is in progress. **[B0271] [B0272]**
- Criticality shall be anticipated when dilution is in progress.

5. **COMMENCE** dilution PER DILUTE MAKEUP MODE (CVCS) section of OI-2B, CVCS BORATION, DILUTION & MAKEUP OPERATIONS. ____

6. CONSIDER borating all the Purification IXs to the ECC boron concentration **PER** OI-2D, section titled, EQUALIZE THE PURIFICATION IXs TO THE ECC BORON CONCENTRATION OR ECC BORON CONCENTRATION. ____

7. **IF** a boron dilution greater than 800 gallons is required, **THEN PERFORM** the following while diluting the RCS: **[B0061]**

   a. **DILUTE** in two or more equal batches. ____

NOTE

Plant Chemistry requires approximately 45 minutes to obtain a representative boron sample.

   b. **REQUEST** Chemistry to sample RCS boron concentration after each batch. **[B0605]** ____

   c. **IF** the actual RCS boron concentration from the final dilution is **NOT** within 5 PPM of the ECC boron concentration, **THEN ADJUST** the ECC CEA position for the actual RCS boron concentration **PER** NEOP-302. ____

6.7 TAKE THE REACTOR CRITICAL (Continued) **INITIALS**

> **CAUTION**
> When performing a Reactor Startup during a steep Xenon burnout curve time frame, attention should be given to time delays vs the lower critical rod height and potentially going critical on Xenon burnout.

F. **OBSERVE** the following requirements while withdrawing Regulating Groups:

1. **IF** desired,
   THEN ENSURE Electrical Maintenance personnel are available to record Insertion and Withdrawal CEA traces using the COILCET test equipment, **AND** communications are established with the CR. ____ 04502

2. Closely **MONITOR** ALL WRNI channels **AND** CEA positions **AND** SUR meters. ____

3. **ENSURE** that the CEAs are withdrawn in proper sequence **AND** with a minimum of 90 inch overlap, by Secondary Group Position indication. ____

   - **IF** the Plant Computer is **NOT** available,
     THEN the Reactor Operator will maintain the 90 inch overlap. ____

4. **AFTER** each incremental withdrawal,
   THEN TERMINATE CEA motion **AND OBSERVE** flux level until it stabilizes **OR** an observable trend is noted. **[B0032]** ____

6.7.F TAKE THE REACTOR CRITICAL (Continued) **INITIALS**

5. **IF** any of the following conditions exist:

   - The WRNIs and SUR Meters indicate that criticality is going to happen below the ECC Lower Bound CEA Position.
   - It is desired to suspend the startup **AND** recalculate the ECC for any reason.

   THEN PERFORM the following: **[B0032] [B0922]**

   a. **INSERT ALL** Regulating CEAs to the Lower Computer Stop (LCS) using manual sequential. ____

   b. **NOTIFY** the Reactor Engineering Work Group (REWG) that the Regulating CEAs are being inserted to the LCS. ____

   c. **INITIATE** a Condition Report to document any ECC discrepency. ____

   d. **OBTAIN** an adjusted ECC from REWG **PER** NEOP-302. ____

   e. **ENSURE** the following prior to recommencing the reactor startup:

      (1) The error in the ECC process has been determined **AND** understood. ____

      (2) **CONCURRENCE** for reactor startup is received from the Superintendent - Nuclear Operations or his alternate, based on evaluation of core power distributions for reactivity anomalies. ____

6.7.F TAKE THE REACTOR CRITICAL (Continued) **INITIALS**

6. **IF** the WRNIs and SUR Meters indicate that criticality is going to happen above the ECC Upper Bound CEA Position, **THEN PERFORM** the following: **[B0032] [B0922]**

   a. **INSERT** the Regulating CEAs to the Zero Power PDIL CEA Position using manual sequential. ____

   b. **NOTIFY** the Reactor Engineering Work Group (REWG) that the Regulating CEAs are being inserted to the Zero Power PDIL CEA Position. ____

   c. **INITIATE** a Condition Report to document any ECC discrepency. ____

   d. **OBTAIN** an adjusted ECC from REWG **PER** NEOP-302. ____

   e. **ENSURE** the following prior to recommencing the reactor startup:

      (1) The error in the ECC process has been determined **AND** understood. ____

      (2) **CONCURRENCE** for reactor startup is received from the Superintendent - Nuclear Operations or his alternate, based on evaluation of core power distributions for reactivity anomalies. ____

6.7 TAKE THE REACTOR CRITICAL (Continued) **INITIALS**

NOTE

- CEAs should be withdrawn with increments no more than 30 inches in MANUAL SEQUENTIAL.
- The remaining CEAs will **NOT** be withdrawn to the UEL until after the Reactor is critical.

CAUTION

- Do **NOT** exceed a 1 DPM sustained startup rate.
- Criticality shall be anticipated when CEAs are being withdrawn. **[B0032]**
- Withdraw CEAs only in a deliberate and carefully controlled manner. During withdrawl, constantly monitor nuclear instrumentation and redundant indications of reactor power level and neutron flux. **[B0372]**

G. **IF** the Plant Computer **AND** DAS B is available,
THEN WITHDRAW Regulating Groups to achieve criticality as follows:

1. **PLACE** CEAs in MANUAL SEQUENTIAL. ____

NOTE

Withdrawal increments should lessen as the Reactor approaches criticality.

2. **WITHDRAW** Regulating Group 3 to the UCS in equal increments **AND PERFORM** the following: ____
   - **ALLOW** flux level to stabilize after each incremental withdrawal ____
   - **ENSURE** a minimum 90 inch overlap maintained with Regulating Group 4, by Secondary Group Position indication. ____
   - **IF** flux level is observed to be rising (positive SUR) with NO CEA withdrawal,
     THEN DECLARE the Reactor critical **AND LOG** the time of criticality in the CRO Log Book ____

6.7.G TAKE THE REACTOR CRITICAL (Continued) **INITIALS**

NOTE
Withdrawal increments should lessen as the Reactor approaches criticality.

CAUTION
DO **NOT** EXCEED THE ECC UPPER BOUND CEA POSITION.

3. **IF** the Reactor is **NOT** critical,
   THEN WITHDRAW Regulating Group 4 increments until the reactor is critical **OR** CEA height is at the UCS while PERFORMING the following: ____

   - **ALLOW** flux level to stabilize after each incremental withdrawal ____
   - **ENSURE** a minimum of 90 inch overlap maintained with Regulating Group 5, by Secondary Group Position indication. ____
   - **WHEN** flux level is first observed to be rising (positive SUR) with NO CEA withdrawal,
     THEN DECLARE the Reactor critical **AND LOG** the time of criticality in the CRO Log Book ____

NOTE
Withdrawal increments should lessen as the Reactor approaches criticality.

CAUTION
DO **NOT** EXCEED THE ECC UPPER BOUND CEA POSITION.

4. **IF** the Reactor is **NOT** critical,
   THEN WITHDRAW Regulating Group 5 increments until the reactor is critical **OR** CEA height is at the ECC Upper Bound CEA position while PERFORMING the following: ____

   - **ALLOW** flux level to stabilize after each incremental withdrawal ____
   - **WHEN** flux level is first observed to be rising (positive SUR) with NO CEA withdrawal,
     THEN DECLARE the Reactor critical **AND LOG** the time of criticality in the CRO Log Book ____

6.7 TAKE THE REACTOR CRITICAL (Continued) **INITIALS**

NOTE

- CEAs should be withdrawn with increments no more than 10 inches in MANUAL GROUP.
- The remaining CEAs will **NOT** be withdrawn to the UEL until after the Reactor is critical.

CAUTION

- Do **NOT** exceed a 1 DPM sustained startup rate.
- Criticality shall be anticipated when CEAs are being withdrawn. **[B0032]**
- Withdraw CEAs only in a deliberate and carefully controlled manner. During withdrawal, constantly monitor nuclear instrumentation and redundant indications of reactor power level and neutron flux. **[B0372]**

H. **IF** the Plant Computer **OR** DAS B is **NOT** available,
THEN WITHDRAW Regulating Groups to achieve criticality as follows:

1. **PLACE** CEAs in MANUAL GROUP. ____
2. **SELECT** Regulating Group 3. ____
3. **WITHDRAW** Regulating Group 3 to the UCS in equal increments **AND PERFORM** the following: ____
   - **ALLOW** flux level to stabilize after each incremental withdrawal ____
   - Alternately **SELECT** Regulating Group 4 **AND MAINTAIN** a minimum of 90 inch overlap with Regulating Group 3, by Secondary Group position indication. ____
   - **IF** flux level is observed to be rising (positive SUR) with NO CEA withdrawal,
     THEN DECLARE the Reactor critical **AND LOG** the time of criticality in the CRO Log Book ____

6.7.H TAKE THE REACTOR CRITICAL (Continued) **INITIALS**

NOTE
Withdrawal increments should lessen as the Reactor approaches criticality.

CAUTION
DO **NOT** EXCEED THE ECC UPPER BOUND CEA POSITION.

4. **IF** the Reactor is **NOT** critical,
   THEN WITHDRAW Regulating Group 4 in increments until the reactor is critical **OR** CEA height is at the Upper Computer Stop while PERFORMING the following: ____

   - **ALLOW** flux level to stabilize after each incremental withdrawal ____
   - Alternately **SELECT** Regulating Group 5 **AND MAINTAIN** a minimum of 90 inch overlap with Regulating Group 4, by Secondary Group position indication. ____
   - **WHEN** flux level is first observed to be rising (positive SUR) with NO CEA withdrawal,
     THEN DECLARE the Reactor critical **AND LOG** the time of criticality in the CRO Log Book ____

NOTE
Withdrawal increments should lessen as the Reactor approaches criticality.

CAUTION
DO **NOT** EXCEED THE ECC UPPER BOUND CEA POSITION.

5. **IF** the Reactor is **NOT** critical,
   THEN WITHDRAW Regulating Group 5 in increments until the reactor is critical **OR** CEA height is at the ECC Upper Bound CEA position while PERFORMING the following: ____

   - **ALLOW** flux level to stabilize after each incremental withdrawal ____
   - **WHEN** flux level is first observed to be rising (positive SUR) with NO CEA withdrawal,
     THEN DECLARE the Reactor critical **AND LOG** the time of criticality in the CRO Log Book ____

I. **ENSURE** the CEAs are aligned to the 90 inch overlap requirement, by Secondary Group Position indication. ____

6.7 TAKE THE REACTOR CRITICAL (Continued) **INITIALS**

J. **SECURE** the Shutdown Monitor **PER** OI-30 NUCLEAR INSTRUMENTATION. **[B0138]** ____

K. **IF** RCS T_{COLD} is less than 525° F, **THEN LOG** T_{COLD} in the CRO Log every 30 minutes, in fulfillment of Tech Spec SR 3.4.2.1 **[B0140]** ____

L. **STABILIZE** Reactor power at 10^{-4}% power **AND LOG** the following critical data in the CRO Log Book **AND** on the ECC form: ____

- date and time of critical data ____
- positions of ALL CEA groups ____
- Reactor power ____
- T_{AVG} ____
- RCS boron concentration **[B0605]** ____

M. **CHECK** WRNI channels indicating approximately 10^{-4}% **AND** 2C05 annunciator "S/U RATE TRIP A,B,C,D ENABLE" in alarm. ____

NOTE
The trending range of NRRHO2 (wide range) is from 10^{-5}% to 100% reactor power.

N. **PLACE** NRRHO2 on pen recorder trending **PER** OI-50A, PLANT COMPUTER. ____

O. **NOTIFY** Radiation Safety Supervision that the Reactor is critical at 10^{-4}% power. ____

P. **NOTIFY** Plant Chemistry that they can secure taking 30 minute RCS boron samples. ____

Q. **IF** at **ANY** time, a critical Reactor becomes subcritical as indicated by the following: **[B2412]**

- Reactor power less than 10^{-1}%
- Flux level lowering

THEN FULLY INSERT ALL Regulating CEAs.

6.7 TAKE THE REACTOR CRITICAL (Continued) **INITIALS**

NOTE

Control of ASI may require the use of Regulating Group 4 until approximately 30% Reactor power is reached. Use of Regulating Group 4 will be at the discretion of the Reactor Operator within the Limits of Tech Spec 3.1.6 Regulating CEA Insertion Limits.

CAUTION

- ASI values must be maintained within the limits of NEOP-23, Figure 2-IV A.2. in Mode 1.
- Withdraw CEAs only in a deliberate and carefully controlled manner. During withdrawal, constantly monitor nuclear instrumentation and redundant indications of reactor power level and neutron flux. **[B0372]**

R. **ALIGN** fully withdrawn Regulating Group CEAs to the UEL as follows:

1. **PLACE** CEAs in MANUAL INDIVIDUAL. ____

2. Alternately **SELECT** each individual CEA in Regulating Group 3, **AND WITHDRAW** it to the UEL. ____

   - **CHECK** the UEL Light illuminates as each CEA reaches its UEL. ____
   - **VERIFY** CEAPDS indicates 133"-136" for each CEA as it reaches the UEL. (TRM TNC 15.1.4.a) ____

3. **IF** Regulating Group 4 is fully withdrawn, **THEN** alternately **SELECT** each individual CEA in Regulating Group 4, **AND WITHDRAW** it to the UEL. ____

   - **CHECK** the UEL Light illuminates as each CEA reaches its UEL. ____
   - **VERIFY** CEAPDS indicates 133"-136" for each CEA as it reaches the UEL. (TRM TNC 15.1.4.a) ____

6.7 TAKE THE REACTOR CRITICAL (Continued) **INITIALS**

NOTE
When reactor power is above the point of adding heat (1%), RCS temperature can be controlled by steam demand **OR** CEA adjustment. **[B0240]**

CAUTION
Do **NOT** exceed a sustained one DPM startup rate.

S. **RAISE** Reactor power to approximately 1% by LRNI **AND PERFORM** the following: ____

1. **CHECK** ALL WRNI channels indicating less than 2%. ____

   - **LOG** verification of at least two decades of overlap between the Wide Range Logarithmic Neutron Flux Monitoring Channels and the Power Range Neutron Flux Monitoring Channels. (Tech Spec SR.3.3.1.1 Bases) ____

CAUTION
Linear Range NI channels must be observed on the RPS (2C15), as indication on 2C05 may be indicating ΔT Power **AND NOT** NI Power. **[B2412]**

2. **CHECK** indication on the Linear Range channels beginning to rise. ____

3. **VERIFY** 2C05 digital power indication, 2-XI-5515, is setup **PER** OI-50A, PLANT COMPUTER, for indicating LRNI power. **[B0386] [B0032]** ____

NOTE
- The trend range of NRRHO2 (wide range) is from 10^{-5}% to 100% reactor power.
- The trend range of NRRHO1 (linear range) is from 3% to 100% reactor power. NRRHO1 is the preferred point to monitor when reactor power is greater than 3%.

T. **IF** available,
THEN REPLACE NRRHO2 with NRRHO1 on pen recorder trend **PER** OI-50A, PLANT COMPUTER. ____

6.7 TAKE THE REACTOR CRITICAL (Continued) **INITIALS**

CAUTION
CEAs shall **NOT** be borated out of the core in Mode 2 unless GS-SO's permission is obtained **AND** a brief is held that establishes power level to be maintained and instrumentation to monitor to ensure power remains greater than the point of adding heat. **[B0386]**

U. **WHEN** maintaining power between 1% and 5% **AND IF** using NR5A for power indication,
THEN periodically **COMPARE** redundant 2C05 power range indications to ensure the highest channel of power does **NOT** exceed 5% power **PRIOR** to declaring Mode 1. ____

****** END ******

6.8 MODE 1 PREPARATIONS

INITIALS

NOTE
Steps in this section may be performed concurrently or in any order.

A. **IF** desired,
THEN PERFORM initial checks and warming of the Main Turbine **PER** the applicable steps of OI-43A, MAIN TURBINE & GENERATOR/EXCITER OPERATION, as determined by the CRS. ____

B. **REQUEST** Chemistry to confirm that the requirements of CP-204, SPECIFICATION AND SURVEILLANCE - PRIMARY SYSTEMS are satisfied for Mode 1 operation. ____

C. **IF** entering this section from PSTP-2,
THEN SECURE the Shutdown Monitor **PER** OI-30, NUCLEAR INSTRUMENTATION. **[B0138]** ____

D. **IF** the Unit is in ANY Technical Specification Action Statement to which Tech Spec 3.0.4 does allow a mode change,
THEN OBTAIN permission for Mode 1 entry from the M-NO or GS-SO. ____

NOTE
- SGFPs should be shifted to Main and Reheat Steam **PRIOR** to exceeding 5% power.
- GS-SO or M-NO permission is needed to enter Mode 1 with only one SGFP available.

CAUTION
Excessive feeding at low power conditions will affect Tc and Reactivity. PZR level and RCS pressure can be affected. **[B0240]**

E. **IF** only one SGFP is available,
THEN SHIFT the steam supply for the SGFP to Main and Reheat Steam **PER** OI-12A, FEEDWATER SYSTEM. ____

6.8 MODE 1 PREPARATIONS (Continued) **INITIALS**

CAUTION
Excessive feeding at low power conditions will affect Tc and Reactivity. PZR level and RCS pressure can be affected. **[B0240]**

F. **IF** the second SGFP is available for use,
THEN:

1. **STARTUP** the second SGFP aligned to Main and Reheat steam for parallel operation **PER** OI-12A, FEEDWATER SYSTEM. ____

2. **WHEN** BOTH SGFPs are in parallel operation,
THEN PLACE the SGFP that is aligned to Aux Steam in STANDBY with steam supplies aligned to Main and Reheat **PER** OI-12A, FEEDWATER SYSTEM. ____

G. **SHIFT** the Gland Seal Steam supply to Main Steam as follows:

CAUTION
Gland seal startup or shutdown could affect core reactivity on both units due to changing steam demand. **[B0270]**

1. **THROTTLE** the Seal Stm Reg Byp, 2-TGS-4656-MOV, to obtain approximately 125 PSIG on 2-PI-4686 **OR** approximately 140 PSIA on 2-PI-4681 on 2C02. ____

2. **CLOSE** AUX STM SUPP TO SEAL HDR ISOL MOV, 2-TGS-4684-MOV. ____

3. **CHECK** "GLAND SEAL STM HDR PRESS LO" alarm clear on 2C02. ____

4. **CHECK** Steam Seal Header Pressure approximately 125 PSIG on 2-PI-4686 **OR** approximately 140 PSIA on 2-PI-4681 on 2C02. ____

5. **CHECK** Sealing Steam Pressure to the HP Turbine is between 16 and 20 PSIA on 2-PI-4713. ____

6. **CHECK** Sealing Steam Pressure to the Main Feed Pumps is between 1 and 3 PSIG on 2-PI-4664 on 2C02. ____

7. **CHECK** "LP TURB SEAL STM PRESS" alarm clear on 2C02. ____

6.8 MODE 1 PREPARATIONS (Continued) **INITIALS**

> **NOTE**
> The use of the TBVs to help control RCS temperature should be utilized during the power escalation until approximately 30% power is obtained.

H. **VERIFY** the TBVs are opening to control RCS temperature between 525° F and 535° F. **[B0240]**

- To lower Tc:
  - Raise steam demand ____

  OR

  - Lower reactor power by inserting CEAs. ____
- To raise Tc:
  - Reduce steam demand ____

  OR

  - Raise reactor power by withdrawing CEAs ____

> **CAUTION**
> CEAs shall **NOT** be borated out of the core in Mode 2 unless GS-SO's permission is obtained **AND** a brief is held that establishes power level to be maintained and instrumentation to monitor to ensure power remains greater than the point of adding heat. **[B0386]**

I. **IF** reactor power is to be held below 5%, **THEN** the CRS may **DIRECT** that the portions of OI-43A, MAIN TURBINE & GENERATOR/EXCITER OPERATION, that deal with initial checks and warming of the Main Turbine, may be performed at this time. ____

> **NOTE**
> Computer point EC933 is the preferred method of monitoring ASI when Reactor Power is less than or equal to 20%. When less than 20%, the RPS APD calculator will give an inaccurate ASI value.

J. **IF** available, **MONITOR** ASI using EC933 until Reactor power is greater than 20%. ____

6.8 MODE 1 PREPARATIONS (Continued) **INITIALS**

K. **IF** desired,
THEN ENSURE Electrical Maintenance personnel are available to record Insertion and Withdrawal CEA traces using the COILCET test equipment, **AND** communications are established with the CR. ____ 04502

****** END ******

6.9 MODE 1 ENTRY **INITIALS**

A. **COMMENCE** monitoring Reactor power using the highest Power Range channel (Q_{max}), 2-JI-005 through 2-JI-008. ____

B. **RAISE** Reactor power to 5% **AND** **DECLARE** Mode 1.

- **LOG** the time of Mode 1 entry in the CRO Log Book. ____
- **IF** reactor power is unintentionally lowered to less than 5% (Mode 2),
  THEN:
  1. **STABILIZE** the plant in Mode 2. ____
  2. **VERIFY** Mode 1 requirements are met. ____
  3. **OBTAIN** the GS-SO's permission prior to re-entry into Mode 1. ____

C. **STOP** the WRNI chart recorder. ____

D. **VERIFY** 2C05 digital power indication, 2-XI-5515, is setup **PER** OI-50A section titled, PEN RECORDER TRENDING, subsection titled, 1(2)C05 POWER INDICATION, XI-5515, for indicating ΔT power. **[B0386]** ____

E. **NOTIFY** Chemistry to confirm that the requirements CP-217, SPECIFICATIONS AND SURVEILLANCE - SECONDARY CHEMISTRY are satisfied prior to 15% Reactor power. ____

6.9 MODE 1 ENTRY (Continued) **INITIALS**

F. **RAISE** Reactor power to between 10 and 12%.

1. **RECORD** NI power, Delta T power and Reactor Reg power. ____

	A (X)	B (Y)	C	D
NI POWER				
ΔT POWER				
RR POWER			XXXXXXX	XXXXXXX

NOTE

- When nulling NI pots, the possibility exists that the pot may reach its hard stop before the NUCLEAR POWER-ΔT POWER deviation meter reaches zero.
- Tech Spec 3.3.1 requires the Axial Power Distribution Trip and the Loss of Load Trip to be active when NUCLEAR INSTRUMENT POWER is ≥ 15% RTP.

2. **WHEN** Reactor power is between 10 and 12%,
THEN NULL the NI pot for each channel that NI power is reading less than Delta-T power **PER** OI-30, section titled, NULLING NI POTS TO DELTA T POTS. **[B0412]** ____

   a. **IF** the NI pot is completely run out **AND** the NUCLEAR ΔT CH DEVIATION alarm on 2C05 is clear,
   THEN PROCEED to Step 3. ____

   b. **IF** the NI pot is completely run out **AND** the NUCLEAR ΔT CH DEVIATION alarm on 2C05 is **NOT** clear,
   THEN INITIATE a CR **AND NOTIFY** the System Engineer before continuing with the startup. ____

3. **IF** the absolute difference between Reactor Reg power and RPS power is greater than 2%,
THEN ADJUST the Reactor Reg NIs **PER** OI-30, NUCLEAR INSTRUMENTATION, section titled, REACTOR REGULATING SYSTEM NI CHANNEL ADJUSTMENT DURING STARTUP. ____

6.9.F MODE 1 ENTRY (Continued) **INITIALS**

NOTE
Allowing the Turbine Bypass Valves to modulate while the Main Turbine is initially being loaded provides smoother control of RCS temperature. This aids in operations where precise temperature control is desired (e.g.; when the Reactor has a positive MTC).

4. **LOWER** the setpoint on the TBV Controller, 2-PIC-4056, to allow the Turbine Bypass Valves to modulate while the Main Turbine is being loaded, but **NOT** less than 830 PSIA. ____

5. **ENSURE** ALL Main Turbine bearing temperature **AND** vibration detectors are operable **PRIOR** to rolling the Main Turbine **OR OBTAIN** permission to waive this requirement from the M-NO or GS-SO. ____

6. **START UP** the Main Turbine **PER** OI-43A, MAIN TURBINE AND GENERATOR/EXCITER OPERATION. ____

CAUTION
ASI values must be maintained within the limits of NEOP-23, Figure 2-IV A.2. in Mode 1.

G. **COMMENCE** raising Reactor power **AND LOAD** the Turbine Generator with the following requirements: ____

1. **MAINTAIN** RCS T_{COLD} within 2° F of programmed T_{COLD} of FIGURE 1. ____

   - **IF** RCS T_{COLD} deviates greater than 2° F from programmed T_{COLD},
     THEN INITIATE actions to restore T_{COLD} **AND NOTIFY** the CRS. **[B0240]**

     - To lower Tc:

       - Raise steam demand

       OR

       - Lower reactor power by inserting CEAs

     - To raise Tc:

       - Reduce steam demand

       OR

       - Raise reactor power by withdrawing CEAs.

6.9.G MODE 1 ENTRY (Continued) **INITIALS**

2. IF Thermal Power has changed by greater than or equal to 15% RTP within a 1 hour period,
THEN **NOTIFY** Chemistry to:

   - **SAMPLE** the RCS **PER** Tech Spec SR 3.4.15.2 ____

   - IF required **PER** ODCM SR 4.11.2.1.2,
THEN **SAMPLE** the Main Vent Effluent. ____

H. PRIOR to NUCLEAR INSTRUMENT POWER exceeding 15% RTP, **PERFORM** the following: **[B0412]**

1. **CHECK** 2C05 annunciator "LOSS OF LOAD CH TRIP BYPASS" clears, indicating the Loss of Load Trip Bypass has automatically reset. ____

2. **CHECK** ALL four RPS channel Linear Power Drawer LEVEL 1 and LEVEL 2 lights illuminated, indicating the Axial Power Distribution Trip Bypass has automatically reset. ____

3. **CHECK** 2C05 annunciator "S/U RATE TRIP A,B,C,D ENABLED" clears, indicating the Startup Rate Trips are bypassed. ____

4. **CHECK** both RRS channel LRNI drawer LEVEL 1 and LEVEL 2 lights illuminated. ____

CAUTION
Withdraw CEAs only in a deliberate and carefully controlled manner. **[B0372]**

I. **CONSIDER** placing the CEAs in the ARO position by performing the following: **[B0386]**

   - **RAISE** the RCS boron concentration either by fast borating or borated makeup mode to the VCT **PER** OI-2B, CVCS BORATION, DILUTION & MAKEUP OPERATIONS. ____

   - **WITHDRAW** CEAs is small and controlled increments. ____

   - **MAINTAIN** reactor power approximately the same while borating the RCS and withdrawing CEAs. ____

   - **MONITOR** all available nuclear instrumentation and redundant indications of reactor power and neutron flux. **[B0372]** ____

6.9 MODE 1 ENTRY (Continued) **INITIALS**

J. **VERIFY** Plant Heating Condensate returns are aligned as desired **PER** OI-40: ____

- COND RETN TO 11 COND, 0-PH-486.
- COND RETN TO 21 COND, 0-PH-487.
- PLANT HTNG SYS COND RETURN TO DEAERATOR STOP VLV, 0-AHB-208.

K. **GO TO** OP-3, NORMAL POWER OPERATION, to increase power above 15%. ____

****** END ******

7.0 POST PERFORMANCE ACTIVITIES

A. **WHEN** completed,
THEN FORWARD the original procedure to the Operations Senior Administrative Assistant for retention **PER** CNG-PR-3.01-1000, RECORDS MANAGEMENT.

8.0 BASES

[B0012] Response to CCER 88-05 to caution about the effect temperature has on LRNI indication at low power.

[B0032] Response to SOER 88-02, requires the use of additional reactivity monitoring to prevent premature criticality.

[B0050] Specifies actions to prevent criticality below ZPDIL.

[B0061] Response to SER 13-90, expect criticality whenever the RCS is diluted by 800 gallons or more.

[B0071] Response to SOER 90-3, ensure nuclear instrumentation calibrated prior to power increase.

[B0138] Response to NUMARC 91-06, Shutdown Management and Safety.

[B0140] Response to GL 92-01, concerns on neutron embrittlement and pressurized thermal shock.

[B0232] SER 5-94, requires cycling the MSIVs at NOP and NOT to ensure no mechanical binding when the valve is heated up to operating temperature and pressure.

[B0240] Response to SOER 94-01, RCAR 95-02 & LER 95-003, Added guidance to control Tc when at a no load condition.

[B0270] Operator Reactivity Management Procedure Review Guidelines. Letter from B. Shick to M. Navin 9-22-95

[B0271] This is in response to SOER 94-02, recommendation 4.a: Identify procedure activities that can result in low concentrated borated water being transported to the RCS.

[B0272] SOER 94-02, The requirement to keep an RCP running and PZR spray in operation while doing any RCS boration or dilution is to assure adequate RCS mixing to prevent diluted pockets. However, plant conditions are such that it is not always possible to assure that RCPs are running. In these cases it is possible to minimize the probability of diluted pockets during Natural Circulation cooldown or during SDC operation.

[B0350] Appendix R requirements to maintain breakers open to prevent maloperation.

8.0 BASES (Continued)

[B0361] ES199601370 & NEU 96-266, Maximize pressurizer spray at least 5 hours after the desired RCS boron concentration is verified to equalize RCS/PZR boron concentration. This is based on flushing approximately 3 volumes of PZR water to the RCS main loop.

[B0372] SOER 96-01, Control Room Supervision, Operational Decision-Making and Teamwork. Recommendations 1.b for management of the Control Room enviroment to minimize distractions **AND** 2.a & 4.a, "Control Rods".

[B0386] Response to Issue Report, IR199602030, when SUR Pre-trip alarms were observed while borating the CEAs out of the core when reactor was critical at a low power (just below the POAH). During this evolution **NOT** all indications were being monitored.

[B0404] Response to SOER 96-02 Rec #4, Establish, define and communicate the roles and responsibilities of reactor engineering personnel and appropriate interfaces with the Control Room staff such that reactor engineers provide the necessary technical support during evolutions that affect the reactor core.

[B0412] Corrective action of LER #97-004 to null the NI power pots to Delta-T power at approximately 10% power on a reactor startup and 20% power during shutdown. This is to ensure LOL, SUR Rate and Axial Power Distribution Trips are either bypassed or reset prior to exceeding Tech Spec values as appropriate.

[B0604] Memo (NFM 00-012) from M.W.Dicus providing a breakpoint in core cycle (12,000 MWD/MTU) after which more stringent ASI controls must be used.

[B0605] Memo from the boronometer removal task force that describes increased RCS boron sampling requirements due to the removal of the boronometer.

[B0668] Response to IR3-055-619 to allow a band of 5 PPM between the boron sample and calculated ECC boron.

[B0922] SOER 03-2 Managing Core Design Changes.

[B2412] SOER 07-01, Reactivity Management.

9.0 RECORDS

A. Records generated by this procedure shall be transmitted to Records Management **PER** CNG-PR-3.01-1000, RECORDS MANAGEMENT.

10.0 ATTACHMENTS

A. FIGURE 1, PROGRAMMED T COLD CURVE

10.0 ATTACHMENTS (Continued)

B. APPENDIX 1, COUNT RATE DOUBLING METHOD OF REACTIVITY MONITORING

C. APPENDIX 2, 1/M METHOD OF REACTIVITY MONITORING

D. ATTACHMENT 1, FEEDWATER HTR AND MSR HIGH LEVEL DUMP STARTUP ALIGNMENT

PROGRAMMED T_{COLD} CURVE

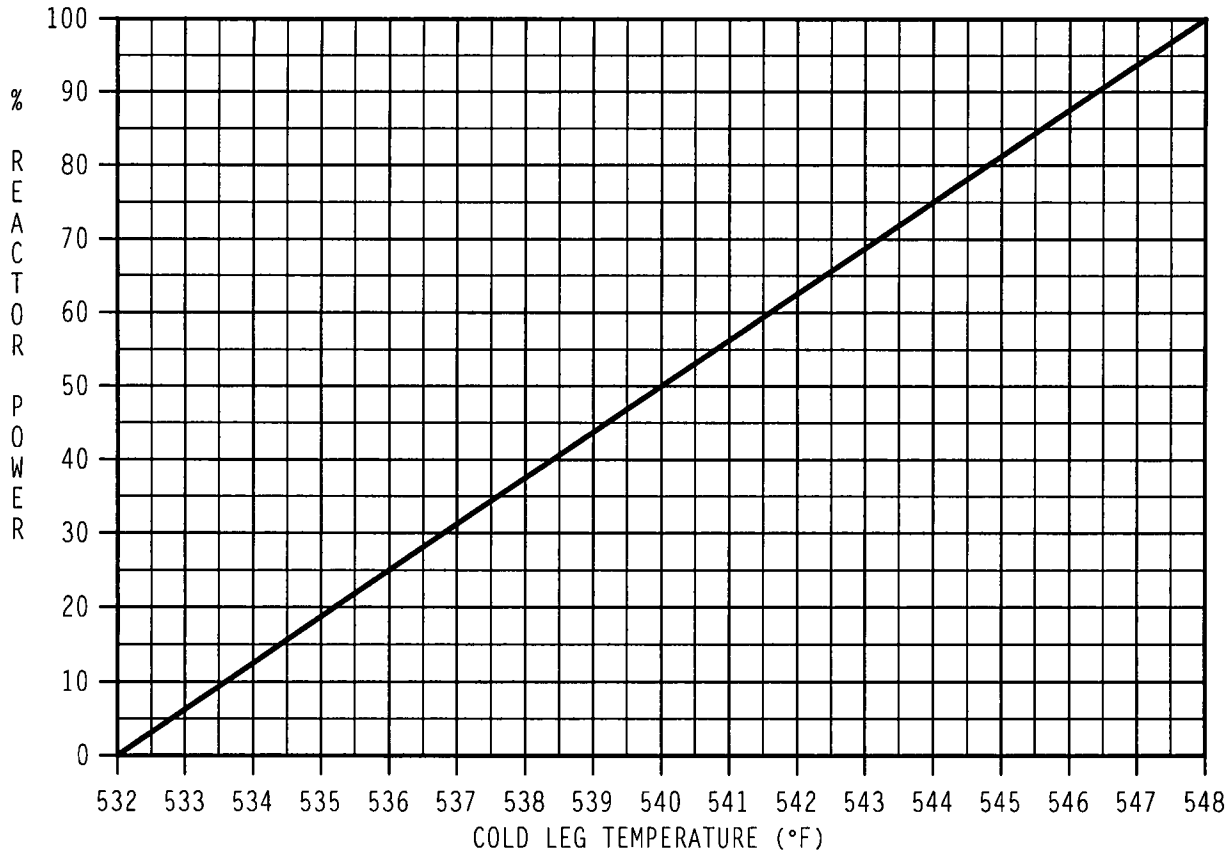

PROGRAMMED TCOLD DATA TABLE

% POWER	TCOLD	% POWER	TCOLD
0	532	55	540.8
5	532.8	60	541.6
10	533.6	65	542.4
15	534.4	70	543.2
20	535.2	75	544
25	536	80	544.8
30	536.8	85	545.6
35	537.6	90	546.4
40	538.4	95	547.2
45	539.2	100	548
50	540		

COUNT RATE DOUBLING METHOD OF REACTIVITY MONITORING

A. DISCUSSION

During a normal approach to Reactor criticality, the neutron countrate increases approximately by a factor of 32. This countrate change is referred to as doubling and is equivalent to five doublings of the countrate ($2^5 = 32$). The alarm function of the Shutdown Monitor resets to 1.5 times the existing countrate each time the reset button is depressed. The number of resets which are required of the Shutdown Monitor is an indication of the core reactivity state and is related to countrate doubling as follows:

$$(2^5)=32=(1.5^X),\ (X)\mathrm{Ln}(1.5)=\mathrm{Ln}(32),\ X = \frac{\mathrm{Ln}(32)}{\mathrm{Ln}(1.5)} = 8.54$$

Therefore, eight resets of the Shutdown Monitor is equivalent to five doublings of the countrate and an indication that the Reactor K_{eff} is approaching one.

B. PROCEDURE

1. **ENSURE** the Shutdown Monitor in service.

2. **RESET** the Shutdown Monitor **AND MARK** an X over reset number 0 in the Reset Table below.

3. **WHEN** the Shutdown Monitor alarms during the approach to criticality, **THEN RESET** the Shutdown Monitor **AND MARK** an X over the next sequential reset number in the Reset Table below.

SDM RESET TABLE

___	___	___	___	___	___	___	___	___
0	1	2	3	4	5	6	7	8

NOTE

WHEN the reset number reaches eight,
THEN, in theory and assuming the Shutdown Monitor is functioning properly, the Reactor should be critical.

1/M METHOD OF REACTIVITY MONITORING [B0032]

NOTE
The Plant Computer 1/M function is preferred over the manual 1/M method, if available.

A. **IF** RCS dilution is in progress,
THEN PERFORM the following for every 1000 gallons of demineralized water added to the RCS:

1. **SELECT** two WRNI channels to monitor.
2. **OBSERVE AND RECORD** the initial countrate (CR_I) of each selected channel.
3. **ALLOW** the countrate to stabilize after each batch dilution.
4. **OBSERVE** the countrate (CR) on each selected WRNI channel.
5. **DIVIDE** CR_I by CR to obtain the 1/M value.

1/M METHOD OF REACTIVITY MONITORING [B0032]

6. **PLOT** the 1/M value against the RCS dilution volume on the RCS DILUTION 1/M PLOT.

RCS DILUTION 1/M PLOT

WRNI Channel____|____

Initial Countrate____|____

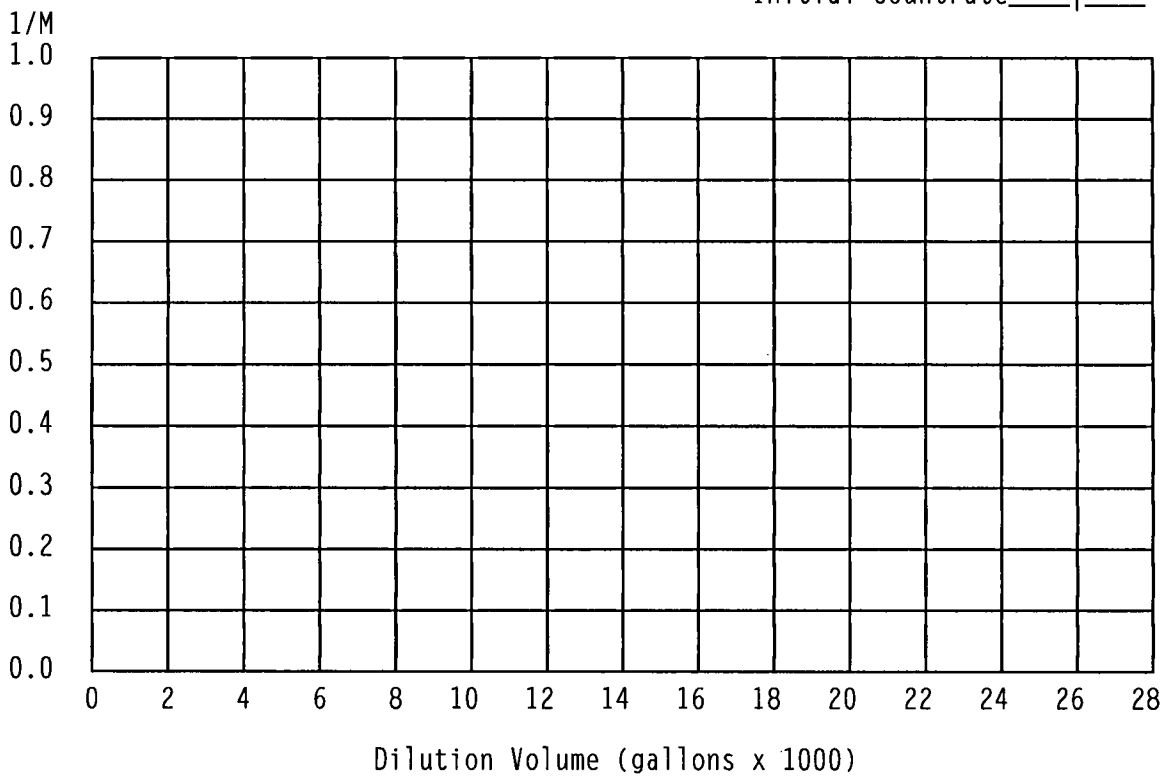

1/M METHOD OF REACTIVITY MONITORING [B0032]

B. **IF** CEA withdrawal is in progress,
THEN PERFORM the following for each incremental withdrawal:

1. **SELECT** two WRNI channels to monitor.
2. **OBSERVE AND RECORD** the initial countrate (CR_I) of each selected channel.
3. **ALLOW** the countrate to stabilize.
4. **OBSERVE** the countrate (CR) on each selected WRNI channel.
5. **DIVIDE** CR_I by CR to obtain the 1/M value.

1/M METHOD OF REACTIVITY MONITORING [B0032]

6. **PLOT** the 1/M value against the Regulating Group position on the CEA WITHDRAWAL 1/M PLOT.

CEA WITHDRAWAL 1/M PLOT

WRNI Channel____|____

Initial Countrate____|____

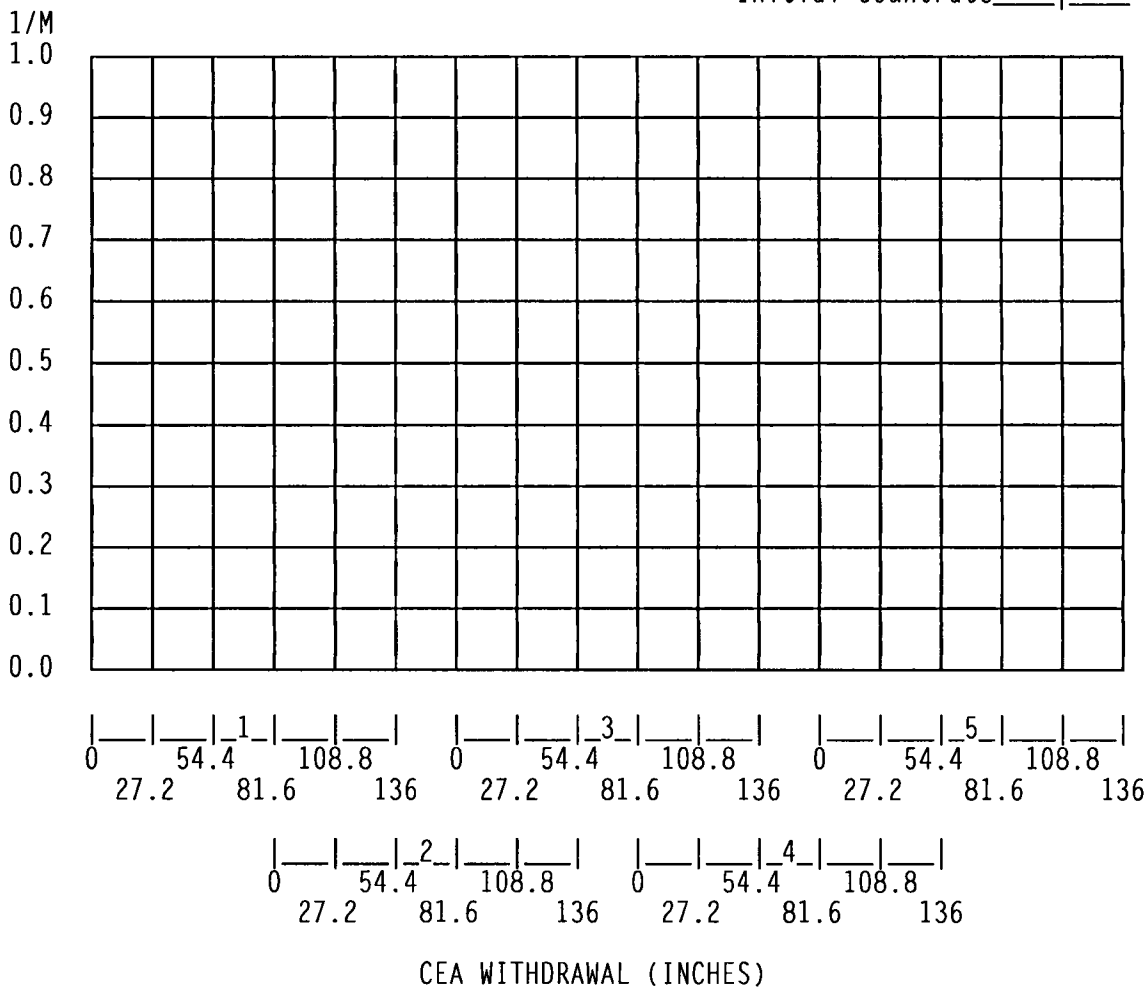

ATTACHMENT 1
FEEDWATER HTR AND MSR HIGH LEVEL DUMP STARTUP ALIGNMENT

VALVE NUMBER	STARTUP/ NORMAL OP. POS	DESCRIPTION	LOCATION	INIT/ DATE	COMMENTS
2-RDV-104	OPEN	INLET 21 MSR DRN TK HI LVL DUMP 21 COND	E SIDE PIT N SIDE MSR DRN TK		
2-RDV-106	OPEN	STOP 21 MSR DRN TK HI LVL DUMP 21 COND	N END 21 COND PIT UNDER DECK		
2-RDV-122	OPEN	INLET 22 MSR DRN TK HI LVL DUMP	SW SIDE 22 MSR DRN TK		
2-RDV-124	OPEN	STOP 22 MSR DRN TK TO 21 COND	N END 21 COND PIT		
2-RDV-163	OPEN	INLET 24 MSR DRN TK HI LVL DUMP TO 21 COND	N OF 24 MSR DRN TK W OF COND PIT		
2-RDV-167	OPEN	STOP 24 MSR DRN TK HI LVL DUMP TO 21 COND	COND PIT N END OF 21 COND		
2-RDV-192	OPEN	INLET 23 MSR DRN TK HI LVL DUMP	COND PIT N OF 23 MSR DRN TK		
2-RDV-196	OPEN	STOP 23 MSR DRN TK TO 21 COND	N END 21 COND UNDER PIPE		
2-HDV-144	OPEN	21 HDT HI LVL DUMP	W SIDE COND PIT		
2-HDV-155	OPEN	22 HDT HI LVL DUMP	W SIDE COND PIT		

ATTACHMENT 1
FEEDWATER HTR AND MSR HIGH LEVEL DUMP STARTUP ALIGNMENT

VALVE NUMBER	STARTUP/ NORMAL OP. POS	DESCRIPTION	LOCATION	INIT/ DATE	COMMENTS
2-HDV-156	OPEN	26A FWH HI LVL DUMP TO 21 COND	W SIDE COND PIT		
2-HDV-157	OPEN	26B FWH HI LVL DUMP TO 21 COND	W SIDE COND PIT		
2-HDV-158	OPEN	25A FWH HI LVL DUMP TO 22 COND	W SIDE COND PIT		
2-HDV-159	OPEN	25B FWH HI LVL DUMP TO 22 COND	W SIDE COND PIT		
2-HDV-165	OPEN	23A FWH HI LVL DUMP TO 23 COND	W SIDE COND PIT		
2-HDV-173	OPEN	23B FWH HI LVL DUMP TO 23 COND	W SIDE COND PIT		
2-HDV-182	OPEN	22A FWH HI LVL DUMP TO 23 COND	N OF 22A FWH		
2-HDV-188	OPEN	22B FWH HI LVL DUMP TO 22 COND	N OF 22B FWH		
2-HDV-194	OPEN	22C FWH HI LVL DUMP TO 21 COND	N OF 22C 21C FWH		
2-HDV-200	OPEN	21A FWH HI LVL DUMP TO 23 COND	12 FT S CORNER OF 23 COND		

ATTACHMENT 1
FEEDWATER HTR AND MSR HIGH LEVEL DUMP STARTUP ALIGNMENT

VALVE NUMBER	STARTUP/ NORMAL OP. POS	DESCRIPTION	LOCATION	INIT/ DATE	COMMENTS
2-HDV-206	OPEN	21B FWH HI LVL DUMP TO 22 COND	12 FT S CORNER 22 COND		
2-HDV-212	OPEN	21C FWH HI LVL DUMP TO 21 COND	12 FT S CORNER 22 COND		

CALVERT CLIFFS NUCLEAR POWER PLANT

UNIT ONE

OP-7

SHUTDOWN OPERATIONS

REVISION 48

SAFETY RELATED

REFERENCE USE

APPROVAL AUTHORITY: J. V. Grooms

EFFECTIVE DATE: 8/2/2010

LIST OF EFFECTIVE PAGES

PAGE NUMBER	REVISION
1-221	48
TABLES	
1, PAGES 1-2	48
2, PAGES 1-2	
3, PAGES 1-3	
4, PAGE 1	
FIGURES	
1-8, PAGE 1	48
APPENDIX	
1, PAGES 1-2	48
2, PAGES 1-2	
3, PAGES 1-2	
4, PAGE 1	
5, PAGE 1	
6, PAGES 1-7	
7, PAGES 1-6	
8, PAGES 1-6	
9, PAGES 1-7	
10, PAGES 1	
11, PAGES 1-2	
12, PAGE 1	
13, PAGES 1-3	
14, PAGE 1	
15, PAGE 1	
16, PAGE 1	
ATTACHMENT	
1, PAGES 1-2	48
2, PAGES 1-2	
3, PAGE 1	
4, PAGE 1-3	
5, PAGE 1	

PROCEDURE ALTERATIONS

PAGE NUMBER	REV/CHG
23,24,28,128,134,136,138, 149,153,159,170,192,194	04800

TABLE OF CONTENTS

	TITLE	PAGE
1.0	PURPOSE	7
2.0	APPLICABILITY/SCOPE	7
3.0	REFERENCES AND DEFINITIONS	8
4.0	PREREQUISITES	11
5.0	PRECAUTIONS	13
6.0	PROCEDURE	20
6.1	COLLAPSE THE PRESSURIZER BUBBLE	20
6.2	RCS DRAINING BETWEEN 100 INCHES PZR LEVEL AND 41 FT ELEVATION	39
6.3	ENTERING REDUCED INVENTORY CONDITION [B0073]	51
6.4	REDUCED INVENTORY OPERATIONS[B0073]	74
6.5	EXITING REDUCED INVENTORY OPERATIONS	85
6.6	RCS FILLING OPERATIONS WITH LEVEL GREATER THAN 41 FT ELEVATION	88
6.7	MODE 6 PREPARATIONS	89
6.8	MODE 6 ENTRY	99
6.9	CORE ALTERATIONS PREPARATIONS[B0408]	100
A.	CHECKLIST FOR CORE ALTERATIONS OTHER THAN FUEL MOVES	100
B.	CORE ALTERATION CHECKLIST FOR FUEL MOVEMENT	106
C.	CORE ALTERATION CHECKLIST FOR CEA COUPLING AFTER FUEL MOVEMENT	116
6.10	MODE 5 PREPARATIONS	118
A.	MODE 5 CHECKLIST (OUTAGE MANAGEMENT)	118
B.	MODE 5 CHECKLIST (OPERATIONS)	121
6.11	MODE 5 ENTRY	125

TABLE OF CONTENTS

TITLE	PAGE
6.12 PREPARE RCS FOR DRAWING PRESSURIZER BUBBLE	126
6.13 FILL THE RCS AND GO SOLID	135
6.14 DRAW PRESSURIZER BUBBLE	145
6.15 VENT THE RCS	152
6.16 VACUUM FILL [B1143]	156
A. PREPARE TO DRAW VACUUM	156
B. DRAW RCS VACUUM	166
C. FILL THE RCS AND BREAK VACUUM	176
D. FILL THE RCS SOLID AND DRAW PRESSURIZER BUBBLE	194
E. MAINTAIN RCS	215
7.0 POST PERFORMANCE ACTIVITIES	218
8.0 BASES	218
9.0 RECORDS	221

TABLE 1 REACTOR COOLANT SYSTEM LEVELS

TABLE 2 MAJOR RCS OPENINGS

TABLE 3 TIME TO START BOILING OR CORE UNCOVERY MULTIPLIER [B0072]

TABLE 4 INVENTORY BALANCE - RCS AND SOURCE VOLUMES

FIGURE 1 TIME TO START BOILING AFTER LOSS OF SDC, 24 HOURS AFTER SHUTDOWN [B0072]

FIGURE 2 TIME TO START BOILING AFTER LOSS OF SDC, 24 HOURS AFTER SHUTDOWN WITH S/G TUBES FULL [B0072]

FIGURE 3 TIME TO CORE UNCOVERY AFTER LOSS OF SDC, 24 HOURS AFTER SHUTDOWN, NO NOZZLE DAMS, NO INJECTION, NO COLD LEG HOLE [B0072]

FIGURE 4 TIME TO CORE UNCOVERY AFTER LOSS OF SDC, 24 HOURS AFTER SHUTDOWN WITH NOZZLE DAMS, NO INJECTION, NO COLD LEG HOLE [B0072]

TABLE OF CONTENTS

TITLE	PAGE
FIGURE 5 RFP TIME TO BOIL AFTER LOSS OF SDC, 24 HOURS AFTER SHUTDOWN [B0072]	
FIGURE 6 NARROW RANGE S/G LEVEL	
FIGURE 7 RCS VACUUM FILL EQUIPMENT	
FIGURE 8 RCS EVACUATION TIME	
APPENDIX 1 PRESSURIZER COOLDOWN LOG	
APPENDIX 2 PRESSURIZER HEATUP LOG	
APPENDIX 3 RCS HEATUP LOG	
APPENDIX 4 CALCULATION OF FINAL RWT CONCENTRATION FOR RCS DRAIN	
APPENDIX 5 REACTOR VESSEL LEVEL CORRELATION	
APPENDIX 6 DRAINING THE RCS VIA CVCS TO WPS	
APPENDIX 7 DRAINING THE RCS VIA CVCS TO THE VCT	
APPENDIX 8 DRAINING THE RCS VIA LPSI MINIFLOW TO RWT	
APPENDIX 9 DRAINING THE RCS VIA RCS DRAIN VALVES	
APPENDIX 10 REDUCED INVENTORY RESPONSIBILITY LIST	
APPENDIX 11 PLANS FOR QUICK RECOVERY OF RCS LEVEL [B0072]	
APPENDIX 12 RCS/SDC PERTURBATION LOG [B0073] [B0138]	
APPENDIX 13 PRESSURIZER MANWAY RE-INSTALLATION CHECKLIST [B0079]	
APPENDIX 14 OBTAINING 1LT4138 READINGS USING OSCILLOSCOPE	
APPENDIX 15 CALCULATION OF TIME TO BOIL	
APPENDIX 16 CALCULATION OF TIME TO CORE UNCOVERY	
ATTACHMENT 1 ESTABLISHING SAFE WORKING CONDITIONS FOR RCS MAINTENANCE [B0072]	
ATTACHMENT 2 GUIDELINES FOR THE REDUCED INVENTORY 50 GPM TAGOUT	

TABLE OF CONTENTS

TITLE		PAGE
ATTACHMENT 3	RCS FILL VALVE ALIGNMENT	
ATTACHMENT 4	REFUELING LEVEL CART INSTRUCTIONS	
ATTACHMENT 5	RCS LEVEL LOG	

1.0 PURPOSE

A. This procedure coordinates and directs actions required during shutdown operations (Mode 5 without a Pressurizer bubble and Mode 6).

2.0 APPLICABILITY/SCOPE

A. This procedure may be used as follows:

- collapse and redraw the Pressurizer bubble while in Mode 5
- take the plant from Mode 5 to Mode 6
- take the plant from Mode 6 to Mode 5
- drain the RCS and perform reduced inventory operations in Mode 5

B. Effective use of this procedure requires that Operations Management review plant status for system availability and out-of-service components, that would impact the planned evolution by entering Technical Specification Action Statements or prohibit system operation. Operations management must determine that adequate equipment is available and that actions are in place to return to service those components needed during the planned evolution.

C. Procedure entry points other than at the beginning:

1. **IF** this procedure is used to collapse the Pressurizer bubble, perform RCS maintenance in reduced inventory and draw a Pressurizer bubble **WITHOUT** entering Mode 6,
THEN sections 6.7 through 6.11 may be omitted in their entirety.

2. **IF** this procedure is used to collapse the Pressurizer bubble, perform RCS maintenance and draw a Pressurizer bubble **WITHOUT** entering reduced inventory operations,
THEN sections 6.3 through 6.5 **AND** 6.7 through 6.11 may be omitted in their entirety.

3. **IF** plant conditions warrant entering this procedure at an off-normal point (somewhere other than the beginning of section 6.1),
THEN the previous steps of section 6.1 may be omitted provided they are reviewed to ensure the minimum requirements for continuing with the section are met. **ALL** steps in the section must be signed off **OR** have CRS/SM permission not to be performed.

4. It is expected to enter and exit the sections of this procedure (i.e.; used to drain and fill the RCS or commence core alterations) several times during an outage. These sections are written to stand alone to allow for repeated performance.

2.0 APPLICABILITY/SCOPE (Continued)

D. This procedure shall be used as follows:

1. With the approval of the CRS or SM, two or more steps within a section may be performed concurrently **OR** out of order. The steps must be evaluated in the sequence listed **AND** be determined not to be dependent upon the actions of other steps within that section.

2. With the approval of the CRS or SM, a step may be delayed **OR** not performed if equipment availability prevents its immediate performance. The step must be evaluated in the sequence listed **AND** determined not to impact the performance of the planned evolution by prohibiting integrated plant operation **OR** entry into Technical Specification Action Statements to which L.C.O. 3.0.4 applies.

3. When encountering a step whose actions have already been performed (e.g.; step says to start a pump and the pump is already running), equipment status shall be reviewed to ensure that existing conditions meet the intent of the step, and with the concurrence of the CRS or SM the step may be signed off.

4. Conditional steps (IF, THEN) may be marked N/A if the condition does not exist or apply.

5. Steps with initial spaces shall be initialed when completed.

6. This procedure may be used in conjunction with OP-1 and OP-2 when performing a plant start-up.

3.0 REFERENCES AND DEFINITIONS

3.1 DEVELOPMENTAL REFERENCES

A. Technical Specifications

B. Technical Requirements Manual (TRM)

C. P&IDs

1. OM-72 (60-729E), REACTOR COOLANT SYSTEM

2. OM-73 (60-730E), CHEMICAL & VOLUME CONTROL SYSTEM

3. OM-74 (60-731E), SAFETY INJECTION & CONTAINMENT SPRAY SYSTEMS

D. Tech Manual 15876-001, V-MAX Oil-Sealed Liquidring Vacuum Pump System

3.2 PERFORMANCE REFERENCES

A. OI-1A, Reactor Coolant System and Pump Operations

B. OI-1B, Quench Tank Operations

3.2 PERFORMANCE REFERENCES (Continued)

C. OI-1E, Reactor Coolant Pump Seal Venting

D. OI-1H, Pressurizer Pressure Control

E. OI-2A, Chemical and Volume Control System

F. OI-2B, CVCS Boration, Dilution and Makeup Operation

G. OI-2D, Purification System Operation

H. OI-3A, Safety Injection and Containment Spray

I. OI-3B, Shutdown Cooling

J. OI-24E, Recirculation of Refueling Water Tanks

K. OI-27C, 4.16 KV System

L. OI-27D, Station Power 480 Volt System

M. STP O-36-1, Shutdown Cooling Hdr Return Isolation Valve Test

N. STP O-55A-1, Containment Closure Verification

O. STP O-59-1, Refueling Machine Hoist Functional Test

P. STP O-60-1, Containment Purge Isolation System Functional Test

Q. STP O-61-1, Mode 6 Nuclear Instrumentation Test

R. STP O-90-1, Breaker Lineup Verification

S. STP O-92-1, Refueling Machine Functional Test

T. STP O-94B-1, RCS/SDC Loop Operability Verification (Modes 4, 5 & 6)

U. STP M-572A, Cold Leg Temperature Instrument Calibration, 1-TE-115 & 1-TE-125

V. STP M-572B, Pressurizer Pressure Calibration Check 1-PT-103 and 1-PT-103-1

W. STP M-672B, Pressurizer Relief Valve (ERV) Channel Functional Test

X. AOP-3B, ABNORMAL SHUTDOWN COOLING CONDITIONS

Y. MN-1-110, Procedure Controlled Activities

Z. EN-1-115, Recording of Plant Transients/Operational Cycles

AA. NO-1-100, Conduct of Operations

AB. NO-1-103, Conduct of Lower Mode Operations

3.2 PERFORMANCE REFERENCES (Continued)

AC. NO-1-113, Control of Radio Transmitters

AD. NO-1-112, Safety Tagging

AE. NO-1-117, Integrated Risk Management

AF. NO-1-205, Locked Valves

AG. NO-1-206, Alarm Annunciator Control

AH. CNG-PR-3.01-1000, Records Management.

AI. NEOP 301, Operator Surveillance Procedure (U-1)

3.3 DEFINITIONS

A. **MAJOR CHANGES** in RCS boron concentration are defined as any change greater than 50 PPM when one of the following is occurring: **[B0271][B0272]**

- Boration from 0% power to shutdown margin
- Boration from 0% power to refueling boron concentration
- Boration from shutdown margin to refueling boron concentration
- Dilution from shutdown margin to ECC
- Dilution from refueling boron concentration to shutdown margin
- Dilution from refueling boron concentration to ECC

4.0 PREREQUISITES — INITIALS

CAUTION

- Manual operation of automatically controlled systems should **NOT** be performed unless a malfunction is apparent **OR** automatic system operation will **NOT** support continued plant operation **OR** as needed to conduct testing.
- Systems shifted to manual operation shall be monitored frequently to ensure correct operation.

A. The following systems are in operation:

- Pressurizer Pressure Control ____
- Pressurizer Level Control ____
- VCT Level Control ____
- Shutdown Cooling ____

B. RCS temperature between 100 and 150° F. ____

C. The minimum essential equipment (MEE) listed in NO-1-200, CONTROL OF SHIFT ACTIVITIES, is available **OR** an approved NO-1-103 Contingency Plan is in effect.

1. **CONTINUE** logging the MEE in the Shift Turnover sheet. ____
2. **CONTINUE** checking MEE availability once per 12 hours. ____

D. **IF** entering this procedure following a S/G tube leak, seismic event, LOCA, Main Steam line break **OR** Main Feedwater line break, **THEN NOTIFY** Nuclear Inspection Services that S/G inspections are required **PER** Tech Spec 5.5.9. ____

CAUTION

Do **NOT** attach tygon tubing to the Pressurizer vent rig. Tygon tubing will collapse when RCS level is lowered and block the vent path.

E. **REQUEST** Mechanical Maintenance to perform the following:

1. **INSTALL** the temporary Pressurizer vent rig (flow gauge and vent valve, 1-RC-277) to the Pressurizer vent line downstream of PZR VENT ISOL, 1-RC-215 and PZR VENT STOP, 1-RC-216. ____
2. **INDEPENDENTLY VERIFY** the temporary Pressurizer vent rig installation. ____
3. **INITIATE** MN-1-110 Attachment PC tracking. ____

4.0 PREREQUISITES (Continued) **INITIALS**

F. **IF** anticipated to drain RCS level to less than or equal to the Reactor Vessel Flange,
THEN REQUEST I&C to install the Reactor Vessel Flange Temperature Monitor. ____

****** END ******

5.0 PRECAUTIONS

NOTE

- **ALL** equipment tagged for purposes of this procedure shall use red danger tags unless specifically directed to use a caution tag.
- **ALL** caution tags used for LTOP should state that the equipment is under LTOP control and is to be operated only with SM or CRS approval when directed by appropriate procedures.

A. **WHEN** RCS temperature is less than 365° F **AND** the RCS is vented less than eight square inches (8 IN^2),
THEN the following Low Temperature Overpressure Protection (LTOP) controls shall be followed: **[B0064]**

1. **OVERPRESSURE PROTECTION**

   a. The requirements of Tech Spec 3.4.12 are met to provide an adequate vent path.

   b. **IF** the Plant Computer is available **AND** SDC is in operation,
   THEN a computer alarm for points P103 and P103A, with a setpoint below the maximum allowable pressure for the corresponding RCS temperature shall be established to warn the operator of a pressure excursion.

2. **MASS ADDITION SAFEGUARDS**

   a. Two HPSI Pumps are caution tagged with their breakers racked out **OR** their discharge valves locked shut.

   b. The third HPSI pump handswitch is caution tagged in PULL TO LOCK.

   c. **ALL** eight MAIN **AND** AUX HPSI Loop Isolation valves are caution tagged shut in PULL TO OVERRIDE.

   d. SI TO CHG HDR, 1-CVC-269-MOV, is caution tagged shut.

   e. **WHEN** the RCS is vented less than 2.6 square inches (2.6 IN^2),
   THEN HPSI injection flow from the RWT shall be limited to less than 210 GPM **AND** through a single HPSI Loop Isolation valve only.

5.0.A PRECAUTIONS (Continued)

3. **INADVERTENT RCP START SAFEGUARDS BELOW 150° F**

   a. **ALL** RCPs are caution tagged by **TWO** of the following four methods:

   - RCP handswitches (two per RCP) in PULL TO LOCK and RCP Breaker Trip Fuses (two per RCP) installed
   - RCP Feeder Breaker handswitches in PULL TO LOCK and RCP Feeder Breaker Trip Fuses installed
   - **ALL** eight RCP breakers racked out
   - **BOTH** feeder breakers, 252-1201 and 252-2202, racked out

B. Do **NOT** exceed the following RCS cooldown rates:

RCS Temperature	Maximum Cooldown Rate
Greater than 256° F	100° F per hour
256° F to 106° F	40° F per hour
Less than 106° F	35° F per hour

C. Do **NOT** exceed the following RCS heatup rates:

RCS Temperature	Maximum Heatup Rate
70° F to 246° F	80° F per hour
Greater than 246° F	100° F per hour

D. Pressurizer linear heatup rate is limited to 100° F per hour.

E. Pressurizer cooldown rate is limited to 200° F in any one hour period. **[B0028]**

F. **WHEN** a bubble exists in the Pressurizer,
THEN Pressurizer water temperature shall be maintained at least 30° F greater than the highest RCS Loop temperature.

G. **WHEN** Auxiliary Spray is used,
THEN the temperature difference between the Pressurizer and Auxiliary Spray shall be less than 400° F.

H. **WHILE** filling the RCS from the RWT,
THEN caution shall be exercised to prevent cooling the Reactor Vessel below 70° F.

I. Minimize the time the RCS is solid water to limit exposure to overpressurization events.

J. RCS hydrogen concentration shall be less than 5cc/kg prior to opening the RCS for repair or refueling.

K. When the RCS is drained, an adequate Reactor Vessel Head vent path must be maintained to prevent gas desorption from accumulating in the Reactor Vessel Head, which can lead to erroneous level indication.

5.0 PRECAUTIONS (Continued)

L. **WHEN** the reactor vessel head is tensioned,
THEN the Reactor Vessel flange temperature shall be maintained greater than or equal to 70° F.

M. **WHEN** performing evolutions that could affect RCS inventory, such as manipulating Safety Injection or CVCS components,
THEN RCS **AND** VCT levels shall be closely monitored to prevent an inadvertent loss of RCS inventory. **[B0138]**

N. To prevent challenging SDC suction header piping, RCS pressure shall be maintained less than 250 PSIA whenever the SDC suction valves are open.

O. Criticality shall be anticipated whenever heatup **OR** cooldown **OR** dilution operations **OR** CEA withdrawals are in progress. **[B0138] [B0270]**

P. The plant computer shall **NOT** intentionally be removed from service whenever the RCS is water solid **OR** when water solid conditions are anticipated. **[B0064]**

Q. **WHEN** performing a **MAJOR CHANGE** in RCS boron concentration,
THEN VERIFY that at least one RCP is running **AND** PZR spray is in operation until the desired boron concentration has been **REACHED AND VERIFIED.** **[B0271][B0272]**

R. Any RCS temperature adjustment must be logged using the appropriate heatup or cooldown appendix.

S. Limitations on RCS dilution from non-borated water sources are as follows: **[B0270]**

1. The RCS shall be filled and vented.

2. The amount of dilution water has been calculated for the dilution method used **PER** OI-2B, CVCS BORATION, DILUTION AND MAKEUP OPERATION.

3. Targeted RCS boron concentration is greater than the Shutdown Boron Concentration limit of NEOP 301

4. Dilution water shall be added in a minimum of two batches with Chemistry sampling and analyzing the RCS after each batch, to ensure the boron concentration is maintained greater than Shutdown Boron Concentration.

5. When a reduction in RCS boron concentration is being made from a source whose boron concentration is LESS THAN the present SDM requirement of the COLR, within one hour of **AND** at least once per hour during the reduction of RCS boron concentration, SDC shall be verified in service with at least 3000 GPM flow through the RCS. (TRM 15.1.1)

6. The dilution rate shall be less than or equal to 88 GPM.

5.0 PRECAUTIONS (Continued)

T. Adequate Mixing Flow is defined as:

At least 3000 GPM flow through the core **AND** at least 500 GPM flow through both S/Gs. **[B0272]**

Adequate Mixing Flow can be verified by ANY of the following:

1. At least one RCP is running with Main or Aux Spray in operation.
2. A Natural Circulation cooldown in progress with Aux Spray initiated.
3. SDC in operation **AND** the following conditions are met:
   - The S/G tubes are full.
   - The S/G temperature is less than or equal to the RCS temperature (as measured by TR-351 and pyrometer).
   - Aux Spray initiated.
     (N/A if the known PZR boron concentration is GREATER than the required Shutdown Margin boron concentration)
   - Steam bubble in the pressurizer.
   - Any Boron changes shall be directed into a loop receiving the SDC flow.

NOTE
The following LPSI Pump combinations ensure at least 500 GPM flow through both S/Gs in either the forward or reverse direction.

- One of the following LPSI pump operation criteria are met:
  - **IF** the reactor is shutdown less than 10 days,
    THEN ONLY one LPSI Pump shall be running.
  - **IF** the reactor is shutdown between 10 and 20 days,
    THEN one or two LPSI Pumps are running.
  - **IF** the reactor is shutdown longer than 20 days,
    THEN BOTH LPSI Pumps shall be running.

U. If diluted pockets are suspected in the RCS, PWR Reload Analysis must be notified to determine a process for starting RCPs. **[B0272]**

5.0 PRECAUTIONS (Continued)

NOTE

Past operating experience has shown that running two LPSI pumps may help in maintaining S/G temperatures warmer.

V. Maintain the following S/G pressure / temperature limitations:

- **WHEN** S/G primary **OR** secondary TEMPERATURE is less than 85° F, **THEN** primary and secondary pressures shall be maintained less than 195 PSIA. (This is 5° F and 20 PSI more restrictive than the requirements of TRM 15.7.1, which requires S/G temperature be greater than 80° F when S/G pressure is greater than 215 PSIA)
- **WHEN** S/G primary **OR** secondary PRESSURE is greater than 195 PSIA, **THEN** primary and secondary temperatures shall be maintained greater than 85° F. (This is 5° F and 20 PSI more restrictive than the requirements of TRM 15.7.1, which requires S/G temperature be greater than 80° F when S/G pressure is greater than 215 PSIA)

W. The following radiological precautions shall be followed:

- **ALL** fluids vented from contaminated systems shall be treated as radioactively contaminated until certified clean by Chemistry
- Radiation Safety Supervision shall be notified of any venting or draining operations in the RCA

NOTE

A S/G is considered available for heat removal when **ALL** of the following conditions exist: **[B0015]**

- Secondary side actual water level is greater than (-)40 inches
- Secondary side is intact
- Associated ADV is available to relieve steam
- Steam-driven AFW Pump available
- RCS is capable of being pressurized

It's preferred to have the S/G tubes full **BUT NOT** required due to time available would be less for time to boil **AND** equilibrium temperature reached in a long-term LOSDC is higher with U-tubes drained.

X. **IF BOTH** S/Gs are **NOT** available for heat removal **AND** the Pressurizer manway is installed,
THEN the minimum essential equipment (MEE) listed in NO-1-20O, CONTROL OF SHIFT ACTIVITIES, shall be available for the existing plant condition **OR** an approved NO-1-103 Contingency Plan is in effect. **[B0116]**

5.0 PRECAUTIONS (Continued)

NOTE

The potential for a boron dilution event exists whenever the following conditions exists: **[B0271]**

- The RCS is depressurized.
- Sufficient driving head exists in the S/G secondary side.
- Nozzle dams are **NOT** installed
- A leak path exists, e.g. via tube/tube sheet leakage

Y. Any unexplained or unanticipated change in RCS inventory during shutdown shall be reported via a Condition Report and shall be promptly investigated. Chemistry shall be notified to commence RCS sampling. The results shall be evaluated for effect on reactivity management prior to exit from Mode 5 into higher operating modes or prior to any activity that would result in a reduction of shutdown margin. **[B0270] [B0271]**

Z. Maximum SDC Flow is 1700 GPM when the Reactor is defueled and the UGS is installed. This will prevent damage to the ICI Thimbles. **[B0424]**

AA. If core alterations are stopped, then prior to recommencing core alterations, the appropriate checks for 72 hours, 24 hours and/or 1 hour after core alterations are required to be completed as appropriate.

AB. To protect the water level in the SFP, the U-1 XFER TUBE ISOL valve, 0-SFP-1 must be shut when the Temporary Reactor Pressure Vessel Cover is installed as a maintenance boundary.

AC. If the S/G tubes have **NOT** been drained, evolutions involving air/gas (placing an unvented SDC heat exchanger in service, gasses coming out of solution, etc.) may cause the RCS level to rise or overflow any openings if the air/gas accumulates in the SG tubes.

AD. RCS level alarm setpoints may be adjusted as necessary to prevent nuisance alarms. When the RCS is in reduced inventory, at least 2 independent RCS level indications shall have their alarms set as directed. When the RCS is **NOT** in reduced inventory, at least one RCS level indication shall have its alarms set as directed. If the minimum level indications with alarms set as directed can **NOT** be obtained, the operator shall check and record the RCS level every 15 minutes. **[B0198] [B0597]**

5.0 PRECAUTIONS (Continued)

AE. RCS level indication 1LE4139 is sensitive to airflow in the still-well area of the instrument. When draining the RCS, cooler air enters the still-well. Additionally, it takes time for the active portion of the RTD to heat up after being uncovered. Until the instrument equilibrates, indicated level will read higher than actual. This results in the level indication lagging behind other level indications during draining. This effect can occur during any air exchange which may be caused by small pressure changes such as installing/removing SG nozzle dams or manways, as well as containment pressure changes. The vendor suggests 10 minutes for the instrument to stabilize after level/pressure changes.

6.0 PROCEDURE **INITIALS**

6.1 COLLAPSE THE PRESSURIZER BUBBLE

A. **ENSURE** RCS temperature less than 150° F. ____

B. **ENSURE ALL** Letdown Control **AND** Back Pressure Regulating valves are in service. ____

> **NOTE**
> Pressurizer level instruments read to 360 inches. Pressurizer volume for draining from solid at 404 inches to 350 inches, when the level instruments are on scale, is approximately 1620 gallons. This equates to approximately 1.9 inch RWT level change and 0.75 feet RC Waste Receiver Tank level change.

C. **DETERMINE** the RCS drain path to be used: (check one) ____

- ☐ LPSI miniflow/SDC to HPSI suction to RWT: **CALCULATE** the final RWT **[B] PER** APPENDIX 4, CALCULATION OF FINAL RWT CONCENTRATION FOR RCS DRAIN.
- ☐ CVCS diversion to WPS
- ☐ RCS loop drain valves to RCDT

> **NOTE**
> Steps AE.6.e through AE.6.i may be performed concurrently with the following steps.

- ☐ WPS via CVCS diversion **AND** SDC Purification

6.1 COLLAPSE THE PRESSURIZER BUBBLE (Continued) **INITIALS**

D. **IMPLEMENT** the following solid water controls: **[B0064]**

1. **ENSURE ALL** Pressurizer Heaters in OFF. ____

2. **TAGOUT** the Pressurizer Heaters. ____

3. **TAGOUT** the RCPs by **ONE** of the following methods:
(N/A method not used)

- **BOTH** feeder breakers 252-1201 and 252-2202 racked out ____
- **ALL** eight RCP breakers racked out ____

4. **ENSURE BOTH** PORVs operable with **ALL** of the following conditions:

* STPs M-672B, M-572A and M-572B current ____

* **BOTH** PORV handswitches in SINGLE MPT ENABLE:

- PORV 402 MPT PROTECTION...1-HS-1406 ____
- PORV 404 MPT PROTECTION...1-HS-1408 ____

* **BOTH** PORV Override Shut/Auto handswitches in AUTO:

- PORV 402 OVERRIDE....1-HS-1402 ____
- PORV 404 OVERRIDE....1-HS-1404 ____

5. **ENSURE BOTH** PORV Block Valves are full open.

- PORV 402 BLOCK.....1-RC-403-MOV ____
- PORV 404 BLOCK.....1-RC-405-MOV ____

6. **ENSURE** two Charging pumps have their breakers racked out and tagged:
(N/A Charging pump not tagged)

- 11 Charging pump.....52-1115 ____
- 12 Charging pump.....52-1415 ____
- 13 Charging pump....52-1104 **AND** 52-1404 ____

6.1.D COLLAPSE THE PRESSURIZER BUBBLE (Continued) **INITIALS**

7. **ISOLATE** HPSI pumps by **ONE** of the following methods:

☐ **RACK OUT AND DANGER TAG** two HPSI pump breakers **AND RACK OUT AND CAUTION TAG** the third HPSI pump breaker **PER** OI-27C, 4.16 KV System.

- 11 HPSI PP, 152-1108 ____
- 12 HPSI PP, 152-1408 ____
- 13 HPSI PP, 152-1110 & 152-1410 ____

☐ **LOCK SHUT AND CAUTION TAG ALL** three HPSI pump manual discharge valves:

- 11 HPSI PP DISCH ISOL...1-SI-428 ____
- 12 HPSI PP DISCH ISOL...1-SI-415 ____
- 13 HPSI PP DISCH ISOL...1-SI-406 ____

NOTE
The following valves will have their breaker CAUTION Tagged off.

☐ **SHUT AND CAUTION TAG ALL** eight MAIN and AUX HPSI Loop Isolation valves:

HPSI MAIN HDR	HPSI AUX HDR
1-SI-616-MOV	1-SI-617-MOV
1-SI-626-MOV	1-SI-627-MOV
1-SI-636-MOV	1-SI-637-MOV
1-SI-646-MOV	1-SI-647-MOV

____

NOTE
The following valves will have their breaker CAUTION Tagged off.

☐ **SHUT AND CAUTION TAG BOTH** MAIN and AUX HPSI Header Isolation valves:

HPSI MAIN HDR ISOL	HPSI AUX HDR ISOL
1-SI-654-MOV	1-SI-656-MOV

____

E. **NOTIFY** Radiation Safety Supervision of collapsing the pressurizer bubble, **AND** the PZR and Rx Vessel vents are to be opened. ____

F. **TERMINATE** operational testing of Safety Injection and CVCS components until normal water level is established in the Pressurizer. **[B0064]** ____

6.1 COLLAPSE THE PRESSURIZER BUBBLE (Continued) **INITIALS**

G. **IF** desired to shift makeup control,
THEN perform one of the following:

- Shift to Automatic Makeup Control **PER** OI-2B Section 6.4. ____

OR

- Align for Fast Boration from the RWT **PER** OI-2B Section 6.12.B.2. ____

> **NOTE**
> The dedicated operator is **NOT** required to be stationed when maintaining PZR level constant at <300" in the PZR.

04800

> **CAUTION**
> PORVs which open due to overpressurization, will remain open. The cause of the overpressure condition should be determined **AND** corrected before shutting the PORVs.

H. **STATION** a dedicated licensed operator as the solid water overpressurization watch with the following duties: **[B0593]** ____

- **MONITOR** RCS pressure, Pressurizer level, Letdown flow and Charging pump operation.
- **TAKE** necessary corrective actions to prevent overpressurization of the RCS.

I. **ADJUST** the local setpoint on the selected PZR LVL CONTR CH, 1-LIC-110X **OR** 1-LIC-110Y, to maximum, **AND ENSURE** it is in AUTO. ____

> **CAUTION**
> Do **NOT** exceed a PZR cooldown rate of 200° F in any one hour period. **[B0028]**

J. **ENSURE SHUT** the Pressurizer Spray valves:

- 11A PZR SPRAY CV.....1-RC-100E-CV ____
- 11B PZR SPRAY CV.....1-RC-100F-CV ____

K. **PURGE** the Quench Tank with Nitrogen **PER** OI-1B, QUENCH TANK OPERATIONS, Section titled, PURGING THE QUENCH TANK WITH NITROGEN TO THE WASTE GAS SYSTEM. ____

6.1 COLLAPSE THE PRESSURIZER BUBBLE (Continued) **INITIALS**

> **NOTE**
> Aligning the RWT to AUX SPRAY will aid in Pressurizer degas, and could help avoid a lengthy Pressurizer recirculation.

04800

L. **UTILIZE** Auxiliary Spray **PER** OI-1H, PRESSURIZER PRESSURE CONTROL, to lower Pressurizer pressure to between 25 and 50 PSIA, while continuing with this section. ____

- **CONTINUE** recording Pressurizer cooldown data in APPENDIX 1, PRESSURIZER COOLDOWN LOG. ____

M. **CONTACT** the Operations FSTC or otherwise determine if STP-0-66A should be used to shut the RCP Bleed Cntmt Isolations, 1-CVC-505 and 506. ____

> **NOTE**
> Locked valves, controlled under NO-1-205.

N. **WHEN** Pressurizer pressure is less than 100 PSIA, **THEN SHUT** the following valves:

- RCP BLEED CNTMT ISOL.....1-CVC-505-CV ____
- RCP BLEED CNTMT ISOL.....1-CVC-506-CV ____

O. **VERIFY** the setpoint of L/D PRESS controller, 1-PIC-201, is set at 100 PSI and in AUTO. ____

P. **ENSURE SHUT** the Letdown Backpressure Control valves:

- L/D BACK PRESS REG.....1-CVC-201P-CV ____
- L/D BACK PRESS REG.....1-CVC-201Q-CV ____

Q. **PLACE** L/D THROTTLE VLV controller, 1-HIC-110, in MANUAL. ____

R. **ADJUST** 1-HIC-110 output to fully open L/D CONTROL valves 1-CVC-110P-CV **AND** 1-CVC-110Q-CV. ____

S. **IF**, at any time, RCS pressure **CANNOT** be maintained less than 150 PSIA,
THEN to prevent lifting RV-199, **OPEN** RCP BLEED CNTMT ISOL valves, 1-CVC-505-CV **AND** 1-CVC-506-CV.(N/A if **NOT** needed) ____

6.1 COLLAPSE THE PRESSURIZER BUBBLE (Continued) INITIALS

NOTE
The L/D Pressure Controller may not respond fast enough in auto to maintain pressure below desired value.

CAUTION
When RCS is in a solid water condition, a rise in RCS temperature can cause an overpressure condition.

T. **WHEN** the Pressurizer is nearly full **AND** RCS pressure starts rising with maximum Aux Spray flow,
THEN PERFORM the following:

1. **PLACE** L/D PRESS controller, 1-PIC-201, in MAN. ____

2. **ADJUST** L/D PRESS controller, 1-PIC-201, output to maintain RCS pressure less than 250 PSIA **AND** at least 25 PSI above saturation pressure for the Pressurizer. ____

3. **WHEN** RCS pressure is stable less than 250 PSIA,
THEN PLACE L/D PRESS controller, 1-PIC-201, in AUTO. ____

4. **IF** Charging suction is aligned to RWT,
THEN ALIGN Charging suction to the VCT if desired. ____

NOTE
During collapse of the Pressurizer bubble and cooldown of the Pressurizer, Pressurizer temperature indication on 1-TI-101 falls to near or below 200° F. As Pressurizer cooldown continues, this temperature may rise above 200° F and then fall again.

U. **CONTINUE** to cool the Pressurizer with Aux Spray to less than 200° F. ____

V. **WHEN** the Pressurizer is less than 200° F,
THEN LOWER L/D PRESS controller, 1-PIC-201, setpoint to minimum. ____

NOTE
RCS draindown to the VCT via L/D will start when all the charging pumps are stopped and will continue until L/D stop valves are shut. VCT level must be monitored until the L/D stop valves are shut.

W. **PLACE ALL** Charging pumps in PULL TO LOCK **AND** continue to **MONITOR** VCT level. ____

6.1 COLLAPSE THE PRESSURIZER BUBBLE (Continued) **INITIALS**

X. **REQUEST** Plant Chemistry to perform the following:

1. **OBTAIN** an RCS boron sample. **[B0605]** ____

2. **REALIGN** the sample sink returns from the VCT to the waste system. ____

Y. **IF** at any time during the drain **OR** depressurization, the RVLMS indicates a void,
THEN VENT the Reactor Vessel Head **AND ALLOW** the space to fill with water as follows: **[B0076]**

> **NOTE**
> The following Reactor Vessel Head vent path becomes less effective as RCS pressure **AND** Pressurizer level are lowered.

1. **OPEN** RX VSL TO QT VENT, 1-RC-103-SV. ____

2. **OPEN** RX VSL VENT B/U, 1-RC-104-SV. ____

3. **WHEN** Quench Tank level rises,
THEN SHUT 1-RC-103-SV **AND** 1-RC-104-SV. ____

4. **IF** necessary to vent the Reactor Vessel Head locally,
THEN OPEN the following Reactor Vessel vents:

   - RX VSL VENT THROT.....1-RC-276 ____
   - RX VSL VENT ISOL.....1-RC-274 ____
   - RX VSL VENT STOP.....1-RC-275 ____

5. **WHEN** air free water exits the vent line,
THEN SHUT 1-RC-276, 1-RC-274 **AND** 1-RC-275. ____

6.1 COLLAPSE THE PRESSURIZER BUBBLE (Continued) **INITIALS**

NOTE

The potential for a boron dilution event exists whenever the following conditions exists: **[B0271]**

- The RCS is depressurized.
- Sufficient driving head exists in the S/G secondary side.
- Nozzle dams are **NOT** installed
- A leak path exists, e.g. via tube/tube sheet leakage

Z. **IF** at anytime during the drain/depressurization, an unexplained/unanticipated change in RCS inventory occurs, **THEN PERFORM** the following: **[B0271]**
(N/A if no unexplained/unanticipated change in RCS inventory occurs)

- **NOTIFY** Chemistry to commence RCS boron sampling. ____
- **NOTIFY** Radiation Safety Supervision. ____
- **INVESTIGATE** all potential sources of RCS dilution. ____
- **COMMENCE** continuous monitoring of RCS level. ____
- **INITIATE** a Condition Report. ____

NOTE

This procedure does **NOT** change RCS boron concentration. Any change in RCS boron concentration while draining or depressurizing the RCS should be considered a boron dilution event.

AA. **IF** a boron dilution event is in progress, **THEN PERFORM** the following: **[B0271]**
(N/A if no boron dilution event)

- Immediately **STOP** all work activities involving interface with the RCS or that potentially affect RCS inventory. ____
- **IMPLEMENT** AOP-1A, INADVERTENT BORON DULUTION. ____

6.1 COLLAPSE THE PRESSURIZER BUBBLE (Continued) **INITIALS**

NOTE
The dedicated operator is **NOT** required to be stationed when maintaining PZR level constant at <300" in the PZR. 04800

AB. **WHEN** pressurizer level is less than 170 inches, **THEN SECURE** the dedicated overpressurization watch. ____

AC. **COMMENCE** continuous monitoring of Pressurizer pressure and level (1-LI-103 and Computer point L110X! **OR** 1-LI-103 and Computer point L110Y!), **AND** RCS temperature. (L110X! and L110Y! will indicate .0000 U when level is greater than 360 inches) ____

NOTE
Pressurizer level instruments read to 360 inches. Pressurizer volume for draining from solid at 404 inches to 350 inches, when the level instruments are on scale, is approximately 1620 gallons. This equates to approximately 1.9 inch RWT level change and 0.75 feet RC Waste Receiver Tank level change.

AD. **IF** any of the following occur **AND** pressurizer level indicates no change:
(N/A if pressurizer level indicates change)

- 30 minutes of draining
- RWT level rises by 1.9 inch
- in service RC Waste Receiver Tank rises by 0.75 feet.
- CVCS Flow Diversion Integrator, 1-FQI-2540, indicates 1620 gallons have been drained from the Pressurizer

6.1 COLLAPSE THE PRESSURIZER BUBBLE (Continued) **INITIALS**

THEN PERFORM the following:

1. **SECURE** the drain by shutting the valve(s) opened to initiate the drain. ____

2. **PLACE** L/D PRESS controller, 1-PIC-201, in AUTO with a setpoint of 150 PSIG. ____

3. **INVESTIGATE** the cause of no change in level, including, **BUT NOT** limited to: ____

   - Instrumentation malfunction: compare indicated level to RVLMS to determine need to refill the RCS
   - Valve misalignment in drain path

4. **WHEN** corrective actions are complete **AND** it is desired to continue with collapsing the bubble,
   THEN RE-INITIATE draining **PER** this section. ____

   - **IF** re-initiating drain to RCW,
     THEN LOG Letdown initiation in the Transient Tracking Log. ____

CAUTION

- Dilution tagout required prior to lowering RCS level less than 90 inches.
- The pressurizer vent valves must remain open while draining to prevent decalibration of the pressurizer level instrumentation.

WARNING

The pressurizer vent valves are opened after the drain is established in order to prevent inadvertent Reactor Coolant spill.

AE. **LOWER** Pressurizer level to between 350 and 100 inches using the following methods:

1. **DRAIN** to VCT via Letdown:

   a. **MONITOR** VCT level while continuing with this section. ____

   b. **VERIFY** at least one Purification IX in service **PER** OI-2D. ____

   c. **AFTER** establishing the RCS drain rate,
      THEN OPEN the following Pressurizer vent valves (Opening the last vent valve slowly):

      - PZR VENT THROT, 1-RC-277 ____
      - PZR VENT ISOL, 1-RC-215 ____
      - PZR VENT STOP, 1-RC-216 ____

6.1.AE.1 COLLAPSE THE PRESSURIZER BUBBLE (Continued) **INITIALS**

d. **WHEN** draining to the VCT via Letdown is complete, **THEN** perform one of the following: ____

- Commence draining via another method.

OR

- **SHUT** the Letdown valves to secure draining via letdown:
  - L/D STOP.....1-CVC-515-CV
  - L/D CNTMT ISOL.....1-CVC-516-CV

OR

2. **DRAIN** using LPSI Miniflow/SDC to HPSI suction to the RWT:

a. **NOTIFY** Radiation Safety Supervision that the RCS will be drained to the RWT. ____

b. **OPEN** the desired valve to initiate drain down:

- 11 LPSI PP MINIFLOW RTN ISOL, 1-SI-449 ____
- 12 LPSI PP MINIFLOW RTN ISOL, 1-SI-450 ____
- 11 SDC HX TO HPSI SUCT, 1-SI-663-MOV ____
- 12 SDC HX TO HPSI SUCT, 1-SI-662-MOV ____

c. **AFTER** establishing the RCS drain rate, **THEN OPEN** the following Pressurizer vent valves (Opening the last vent valve slowly):

- PZR VENT THROT, 1-RC-277 ____
- PZR VENT ISOL, 1-RC-215 ____
- PZR VENT STOP, 1-RC-216 ____

NOTE
Locked valves controlled under NO-1-205.

d. **WHEN** the Pressurizer is at the desired level, **THEN SHUT** the valves used to drain the RCS:

- 11 LPSI PP MINIFLOW RTN ISOL, 1-SI-449 ____
- 12 LPSI PP MINIFLOW RTN ISOL, 1-SI-450 ____
- 11 SDC HX TO HPSI SUCT, 1-SI-663-MOV ____
- 12 SDC HX TO HPSI SUCT, 1-SI-662-MOV ____

OR

6.1.AE COLLAPSE THE PRESSURIZER BUBBLE (Continued) **INITIALS**

NOTE
The operation of CVCS DIVERSION TO DEGAS ISOL, 1-CVC-325, is controlled by NO-1-205, LOCKED VALVES, when SDC is in operation.

3. **DRAIN** to WPS via CVCS diversion:

   a. **VERIFY** that at least one Purification IX is in service. ____

   b. **VERIFY** CVCS DIVERSION TO DEGAS ISOL, 1-CVC-325, is **SHUT**. ____

   c. **SHIFT** the VCT Inlet valve, 1-CVC-500-CV, to the WPS position. ____

   d. **THROTTLE OPEN** CVCS DIVERSION TO DEGAS ISOL, 1-CVC-325, to obtain the required drain rate. ____

   e. **AFTER** establishing the RCS drain rate, **THEN OPEN** the following Pressurizer vent valves (Opening the last vent valve slowly):

      - PZR VENT THROT, 1-RC-277 ____
      - PZR VENT ISOL, 1-RC-215 ____
      - PZR VENT STOP, 1-RC-216 ____

   f. **WHEN** the Pressurizer is at the desired level, **THEN LOCK SHUT** 1-CVC-325. ____

OR

4. **DRAIN** using RCS drain valves to the RCDT:

   a. **PUMP** the RCDT until the RCDT Pump stops on low level. ____

6.1.AE.4 COLLAPSE THE PRESSURIZER BUBBLE (Continued) **INITIALS**

NOTE
The RCS Drain valves marked with an asterisk (*) are locked valves. Locked valves are controlled under NO-1-205.

b. **OPEN OR UNLOCK AND OPEN** one or more sets of RCS Drain Valves:

- 11 HOT LEG DRN.....1-RC-107*
  11 HOT LEG DRN.....1-RC-108 ____

OR

- 11A COLD LEG DRN.....1-RC-111*
  11A COLD LEG DRN.....1-RC-112 ____

OR

- 11B COLD LEG DRN.....1-RC-113*
  11B COLD LEG DRN.....1-RC-114 ____

OR

- 12A COLD LEG DRN.....1-RC-115*
  12A COLD LEG DRN.....1-RC-116 ____

OR

- 12B COLD LEG DRN.....1-RC-117*
  12B COLD LEG DRN.....1-RC-118 ____

c. **AFTER** establishing the RCS drain rate,
THEN OPEN the following Pressurizer vent valves (Opening the last vent valve slowly):

- PZR VENT THROT, 1-RC-277 ____
- PZR VENT ISOL, 1-RC-215 ____
- PZR VENT STOP, 1-RC-216 ____

d. **PUMP** the RCDT as necessary to keep the RCDT High Level alarm clear. ____

e. **WHEN** the Pressurizer is at the desired level,
THEN SHUT OR LOCK SHUT the RCS Drain valves used for the drain. ____

OR

6.1.AE COLLAPSE THE PRESSURIZER BUBBLE (Continued) **INITIALS**

NOTE

- This drain path will provide draining to the WPS with more flow through the CVCS IXs for cleanup.
- Pzr Level shall be lowered to less than 350 inches prior to draining using this step due to it removes letdown as an over-pressure relief path.

5. **DRAIN** to WPS via SDC Purification:

   a. **ENSURE** Pzr level is less than 350 inches. ____

   b. **NOTIFY** Radiation Safety that the RCS will be draining to the WPS. ____

   c. **CONTACT** the Operations FSTC **OR** otherwise determine if STP O-66A should be used to shut the Letdown Isolation valves. ____

   d. **SHUT** the following Letdown valves:

      - L/D STOP.....1-CVC-515-CV ____
      - L/D CNTMT ISOL.....1-CVC-516-CV ____

   e. **PLACE** SDC purification in service **PER** OI-2D, PURIFICATION SYSTEM OPERATION. ____

   f. **COMMENCE** draining the RCS **PER** OI-3B, Section DRAINING THE RCS/RFP TO RC WASTE PROCESSING SYSTEM WITH CVCS PURIFICATION ON SDC. ____

   g. **AFTER** establishing the RCS drain rate, **THEN OPEN** the following Pressurizer vent valves (Opening the last vent valve slowly):

      - PZR VENT THROT, 1-RC-277 ____
      - PZR VENT ISOL, 1-RC-215 ____
      - PZR VENT STOP, 1-RC-216 ____

   h. **WHEN** RCS/PZR is at the desired level, **SECURE** draining the RCS **PER** OI-3B, Section DRAINING THE RCS/RFP TO RC WASTE PROCESSING SYSTEM WITH CVCS PURIFICATION ON SDC. ____

OR

6.1.AE COLLAPSE THE PRESSURIZER BUBBLE (Continued) **INITIALS**

NOTE
The operation of CVCS DIVERSION TO DEGAS ISOL, 1-CVC-325, is controlled by NO-1-205, LOCKED VALVES, when SDC is in operation.

6. **DRAIN** to WPS via CVCS diversion **AND** SDC Purification:

   a. **VERIFY** that at least one Purification IX is in service. ____

   b. **VERIFY** CVCS DIVERSION TO DEGAS ISOL, 1-CVC-325, is LOCKED OPEN. ____

   c. **SHIFT** the VCT Inlet valve, 1-CVC-500-CV, to the WPS position. ____

WARNING
High temperature RCS fluids may be discharged if residual RCS pressure exists.

   d. **OPEN** the following Pressurizer vent valves (Opening the last vent valve slowly):

      - PZR VENT THROT, 1-RC-277 ____
      - PZR VENT ISOL, 1-RC-215 ____
      - PZR VENT STOP, 1-RC-216 ____

   e. **VERIFY** spool pieces at SDC SUPP TO CVCS, 1-SI-465 and CVCS to SDC, 1-SI-475 are installed. ____

   f. **ENSURE SHUT** the following valves:

      (1) U-1 S/D CLG RTN TO 11 SFP, 0-SFP-154 ____

      (2) SUPP TO U-1 S/D CLG FR 11 SFP, 0-SFP-202 ____

      (3) SI TO CVCS INLET DRN, 1-SI-477 ____

      (4) CVCS TO SI DRN, 1-SI-478 ____

      (5) SFP & CVCS RETURN FROM SDC SPOOLPIECE VENT ISOL, 1-SI-720 ____

      (6) U-1 S/D CLG RTN VENT, 0-SFP-228 ____

      (7) U-1 S/D CLG SUPP HDR, 0-SFP-229 ____

6.1.AE.6 COLLAPSE THE PRESSURIZER BUBBLE (Continued) **INITIALS**

g. **IF** the Ultrasonic flow instrument will be used to verify purification flow,
THEN:

(1) **ENSURE** IM has installed the Ultrasonic flow instrument. ____

(2) **ENSURE** IM has **EQUALIZED AND ISOLATED** 1-FI-500. ____

h. **IF** it is desired to use the SDC FLOW INSTRUMENT, 1-FI-500, **AND** 1-FI-500 is **EQUALIZED AND ISOLATED**, **THEN INFORM** IM to place 1-FI-500 back in service. ____

i. **DIRECT** IM to **EQUALIZE AND ISOLATE** the Letdown Flow Transmitter, 1-FT-202. ____

j. **VERIFY** SDC Heat Exchanger Outlet Temperature less than or equal to 130° F, as indicated by 1-TI-303X and 1-TI-303Y. ____

k. Slowly **OPEN** SDC SUPP TO SFP CLR & CVCS ISOL, 1-SI-458. ____

NOTE
A pressure reduction may occur as the piping fills.

l. Slowly **OPEN** SFP & CVCS FROM SDC, 1-SI-442. ____

m. **OPEN** SDC SUPP TO CVCS, 1-SI-465. ____

n. **THROTTLE OPEN** SDC SUPP CVCS B/U, 1-SI-464 to maintain the following:

- Purification flow rate less than 120 GPM. ____
- DO **NOT** exceed 175 PSIG as indicated on 1-PIC-201. ____

6.1.AE.6 COLLAPSE THE PRESSURIZER BUBBLE (Continued) **INITIALS**

o. **MONITOR** 11 RCWRT level **AND** Alarm window F-02 on 1C07 to check that 1-RV-354 is **NOT** lifting (setpoint is approximately 205 PSIG).

(1) **IF** 1-CVC-354-RV lifts, **THEN** shut the following valves:

- SDC SUPP CVCS B/U, 1-SI-464 ____
- L/D STOP, 1-CVC-515 ____
- LD CONTMT ISOL, 1-CVC-516 ____

(2) **ATTEMPT** to reset the relief valve by mechanical agitation. ____

(3) **RESTORE** flow by performing the following:

(a) **OPEN** the following valves:

- L/D STOP, 1-CVC-515 ____
- LD CONTMT ISOL, 1-CVC-516 ____

(b) **THROTTLE OPEN** SDC SUPP CVCS B/U, 1-SI-464 to maintain the following:

- Purification flow rate less than 120 GPM. ____
- DO **NOT** exceed 175 PSIG as indicated on 1-PIC-201. ____

p. **WHEN** the Pressurizer is at the desired level, **THEN PERFORM** the following simultaneously:

- **OPEN** CVCS TO SDC, 1-SI-475. ____
- **LOCK SHUT** 1-CVC-325. ____
- **THROTTLE** SDC SUPP CVCS B/U, 1-SI-464 to maintain the following:
  - Purification flow rate:
    - **IF** using the Ultrasonic Flow Instrument(s), less than 180 GPM through any Ion Exchanger. ____
    - **IF** using 1-FI-500, less than 120 GPM ____
  - DO **NOT** exceed 175 PSIG as indicated on 1-PIC-201 ____

q. **SHUT** the following valves:

- 201P BP REG OUT, 1-CVC-109 ____
- 201Q BP REG OUT, 1-CVC-111 ____

6.1.AE.6 COLLAPSE THE PRESSURIZER BUBBLE (Continued) **INITIALS**

NOTE
If 1-CVC-500-CV is **NOT** gagged in the WPS position **AND** there was a loss of Instrument Air, 1-CVC-500-CV would shift to the VCT position, losing RCS inventory until the purification alignment was isolated.

r. **IF** the Unit is going into a reduced RCS inventory condition, **THEN VERIFY** the VCT Inlet Valve, 1-CVC-500-CV is gagged in the WPS position. **[B0073]** ____

CAUTION
Potential high dose rates may occur in the Containment if the SITs are filled from SDC shortly after SDC initiation **OR** after Hydrogen Peroxide injection.

AF. **IF** desired,
THEN fill SITs **PER** OI-3A Section 6.5.4, maintaining Pressurizer level greater than 100 inches. ____

1. **NOTIFY** Radiation Safety that dose rates may rise in containment. ____

AG. **IF** needed, **CONTACT** the Operations FSTC **OR** otherwise **DETERMINE** if
STP O-66A should be used to shut the Letdown Isolation valves. ____

AH. **IF** opened, **SHUT** the following Letdown valves:

- L/D STOP.....1-CVC-515-CV ____
- L/D CNTMT ISOL.....1-CVC-516-CV ____

AI. **IF** desired,
THEN PLACE SDC purification in service **PER** OI-2D, PURIFICATION SYSTEM OPERATION. (N/A if SDC Purification is in service)

1. **IF** SDC Purification is **NOT** in service,
THEN perform the following:

- **OPEN** CVCS DIVERSION TO DEGAS ISOL, 1-CVC-325. ____
- **PLACE** CVC-500-CV to the VCT position. ____

AJ. **ENSURE SHUT** the nitrogen **AND** hydrogen supply valves to the VCT:

- HYDROGEN SUPPLY TO VCT.....1-CVC-189 ____
- NITROGEN SUPP TO UNIT 1 VCT....O-N2-250 ____

AK. **MAINTAIN** RCS temperature between 100 and 150° F. ____

AL. **LOG** termination of Pressurizer cooldown in Transient Tracking Log. ____

6.1 COLLAPSE THE PRESSURIZER BUBBLE (Continued) **INITIALS**

AM. **ATTACH** completed copies of APPENDIX 1, PRESSURIZER COOLDOWN LOG to the Transient Tracking Log. ____

AN. **REQUEST** Plant Chemistry obtain an RCS boron sample. **[B0605]** ____

CAUTION
WHEN S/G primary **OR** secondary TEMPERATURE is less than 85° F, **THEN** primary and secondary pressures shall be maintained less than 195 PSIA. (This is 5° F and 20 PSI more restrictive than the requirements of TRM 15.7.1, which requires S/G temperature be greater than 80° F when S/G pressure is greater than 215 PSIA)

AO. **IF** RCS temperature is lowered less than 100° F **OR** S/G temperature is lowered less than 85° F, **THEN PERFORM** the following once every hour: (TRM TVR 15.7.1.1) ____

1. **ENSURE** RCS **AND** S/G pressure less than 195 PSIA.

2. **LOG** pressure of the S/Gs and RCS.

AP. **IF** Pressurizer level is less than 170 inches **AND IF** desired, **THEN REMOVE** the RCS water solid tagout. ____

AQ. **IF** final Pressurizer level is between 110 and 100 inches, **THEN PERFORM** the following:

1. **REMOVE** the tubing cap from the tee downstream of 1-RC-275. ____

2. **VERIFY OPEN** the Reactor Vessel Vent valves:

   - RX VSL VENT ISOL, 1-RC-274 ____
   - RX VSL VENT STOP, 1-RC-275 ____
   - RX VSL VENT THROT, 1-RC-276 ____

AR. **WHEN** desired, **THEN STOP BOTH** Pressurizer House Ventilation Fans.

- 11 PZR VENT FAN.....1-HS-6543 (27' SWGR RM) ____
- 12 PZR VENT FAN.....1-HS-6544 (45' E PEN RM) ____

AS. **INFORM** the FSTC-OPS to schedule STP O-93 at a 31 day interval during Modes 5 and 6. ____

****** END ******

6.2 RCS DRAINING BETWEEN 100 INCHES PZR LEVEL AND 41 FT ELEVATION

INITIALS

NOTE

- This section directs RCS draining operations where RCS level will be less than 100 inches in the Pressurizer and above the 41 foot elevation. This section is performed even if the RCS will be drained to reduced inventory in section 6.3. RCS level changes where Pressurizer level is maintained greater than 100 inches are performed **PER** OI-3B, SHUTDOWN COOLING.
- This section may be performed more than once during an outage. A working copy of this section shall be made before each use.
- Steps in Section 6.3, ENTERING REDUCED INVENTORY CONDITION up to step AA. may be completed.

A. **IF** draining to reduced inventory conditions, **THEN** steps in Section 6.3, ENTERING REDUCED INVENTORY CONDITION may be performed concurrently with CRS permission. ____

B. **ENSURE** TWO SDC Loops are operable with at least ONE in operation **PRIOR** to making the S/Gs unavailable for heat removal, **AND RECORD** in the CRO Log. (Tech Spec 3.4.8) ____

C. **PERFORM ONE** of the following:

NOTE

The Reactor shall be subcritical for 24 hours before the Pressurizer Manway is removed. **[B2172]**

- **REQUEST** Mechanical Maintenance to remove the Pressurizer manway **PER** RCS-10, PRESSURIZER MANWAY COVER REMOVAL AND INSTALLATION ____

OR

- For short outages, with the permission of the GS-SO, **CONTINUE** with the procedure with the PZR manway installed. **[B0145]** ____

6.2 RCS DRAINING BETWEEN 100 INCHES PZR LEVEL AND 41 FT ELEVATION (Continued) **INITIALS**

D. **IF** the Pressurizer manway has been removed,
THEN PERFORM the following:
(N/A if Pressurizer manway has not been removed)

1. **ENSURE** the minimum essential equipment (MEE) listed in NO-1-200, CONTROL OF SHIFT ACTIVITIES, for having the Pressurizer manway removed, is available **OR** an approved NO-1-103 Contingency Plan is in effect. ____

2. **CONTINUE** logging the MEE in the Shift Turnover sheet. ____

3. **CONTINUE** checking MEE availability once per 12 hours. ____

4. **PERFORM** STP-O-93-1 with the PZR manway removed. ____

5. **IF** required,
THEN CLEAR the LTOP tagout. ____

E. **IF** the Pressurizer manway is installed,
THEN PERFORM the following:
(N/A if Pressurizer manway has been removed)

1. **ENSURE** the minimum essential equipment (MEE) listed in NO-1-200, CONTROL OF SHIFT ACTIVITIES, is available **OR** an approved NO-1-103 Contingency Plan is in effect. ____

2. **CONTINUE** logging the MEE in the Shift Turnover sheet. ____

3. **CONTINUE** checking MEE availability once per 12 hours. ____

6.2 RCS DRAINING BETWEEN 100 INCHES PZR LEVEL AND 41 FT ELEVATION (Continued) **INITIALS**

F. **IF** RCS level will be below the bottom of the Pressurizer (48.5 foot elevation),
THEN PERFORM the following:

1. **REQUEST** IM to install **AND** calibrate if necessary the Refueling Level Cart in the Control Room **PER** an approved MO. ____

2. **PLACE** the RCS Wide Range Level Monitoring System in service as follows:

   a. **ENSURE OPEN** the following Reactor Vessel Vent valves:

      - RX VSL VENT ISOL.....1-RC-274 ____
      - RX VSL VENT STOP.....1-RC-275 ____
      - RX VSL VENT THROT.....1-RC-276 ____

   b. **SHUT** HDR VENT ISOL LG-4139 & LE-4139, 1-RC-1432. ____

   c. **OPEN** the following valves to unisolate 1LE4139 **AND** 1-LG-4139:

      - ROOT ISOL FOR LE-4139 & LG-4139.....1-RC-1427 ____
      - B/U ISOL FOR LE-4139 & LG-4139.....1-RC-1428 ____

   d. **DRAIN** water from the upper sensing line by opening 1-PDT-124 Drain isolation valves:

      - 1-RC-PDT-124 DRN ISOL.....1-RC-1279 ____
      - 1-RC-PDT-124 B/U DRN ISOL...1-RC-1278 ____

   e. **WHEN** the water has drained from the sensing line,
      THEN PERFORM the following:

      - **SHUT** 1-RC-1279 ____
      - **SHUT** 1-RC-1278 ____

3. **IF** desired,
   THEN CONTACT IM to install the local RCS level indication tygon tubing at LOCAL REFUEL LVL ISOL, 1-RC-1238 **PER** the following steps:

   a. **INSTALL** Tygon tubing at LOCAL REFUEL LVL ISOL, 1-RC-1238. ____

   b. **PERFORM** an Independent Verification that the tygon tubing has been installed correctly. ____

   c. **INITIATE** MN-1-110, Attachment PC tracking. ____

   d. WALK DOWN the tygon tubing **AND ENSURE** it is free of kinks, loop seals, trapped air and obstructions. ____

6.2.F RCS DRAINING BETWEEN 100 INCHES PZR LEVEL AND 41 FT ELEVATION (Continued) **INITIALS**

4. **OPEN** the following Refueling Level Indicator isolation valves:

   - REFUEL LVL IND ISOL.....1-RC-105 ____
   - REFUEL LVL IND STOP.....1-RC-106 ____

5. **SLOWLY OPEN** 1-LT-4140 isolation valves:

   - 1-RC-4140-LT ISOL.....1-RC-1235 ____
   - 1-RC-4140-LT STOP.....1-RC-1236 ____

6. **IF** tygon tubing is installed **AND** being used for local RCS level indication,
   THEN OPEN LOCAL REFUEL LVL ISOL, 1-RC-1238. ____

7. **WHEN** IM has installed the MLMS pressure transducers,
   AND the Pressurizer manway has been removed,
   THEN PERFORM the following to place the pressure transducers in service:

   a. **ENSURE SHUT** the following valves:

      - 1PDT111A MLMS ISOLATION, 1-RC-1292 ____
      - 1PDT121A MLMS ISOLATION, 1-RC-1295 ____

   b. **OPEN** the following valves:

      - 1PDT111A HEADER DRAIN, 1-RC-1290 ____
      - 1PDT111A HEADER B/U DRAIN, 1-RC-1291 ____
      - 1PDT121A HEADER DRAIN, 1-RC-1293 ____
      - 1PDT121A HEADER B/U DRAIN, 1-RC-1294 ____
      - PZR INSTR HDR VENT SOUTH, 1-RC-1168 ____
      - PZR INSTR HDR VENT NORTH, 1-RC-1185 ____

   c. **REQUEST** IM to vent the hot leg pressure transducers. ____

8. **ENSURE** MLMS Density Compensation on the Refueling Level Cart is updated using ATTACHMENT 4, REFUELING LEVEL CART INSTRUCTIONS:

   - **SET** RCS temperature on 0CRT4136 ____

   - **SET** RCS temperature on 0CRT4137 ____

9. **VERIFY** at least two CETs, powered from a ZA and a ZB power source, are available with indication in the Control Room **AND** an audible alarm to annunciate on 1C06, "SELECTED COMPUTER POINT" (Group Display 165 or 265). ____

6.2.F RCS DRAINING BETWEEN 100 INCHES PZR LEVEL AND 41 FT ELEVATION (Continued) **INITIALS**

> **NOTE**
> 1CS4138 **AND** 1CS4139 are located on the East wall of the Cable Spreading Room to the right of the door.

10. **ENERGIZE** the RCS Level Monitoring Systems by placing 1CS4138 **AND** 1CS4139, in ON. ____

11. **COMPARE** RCS level indicators 4136, 4137, 1-LG-4139, 1LE4139, 1LT4140, and the tygon tubing, if used. ____

    - **IF** indications are **NOT** within 0.5 feet of each other, **THEN PERFORM** the following:

      a. **INITIATE** a CR to investigate the discrepancies. ____

      b. **CONTACT** the Shift Manager to evaluate available indications prior to performing any additional draining. ____

12. **IF** tygon tubing is being used for local RCS level indication, **THEN SHUT** LOCAL REFUEL LVL ISOL, 1-RC-1238. ____

> **NOTE**
> Alternate boundaries may be tagged **IF** ANY of the substeps listed below for limiting Dilution Sources per TS 3.1.1 can **NOT** be met as written (e.g., a listed boundary valve is being overhauled, etc..).

G. **IF** the RC Makeup pumps are **NOT** needed for makeup to the RWT, **THEN ENSURE** RCS dilution sources less than 88 GPM. (Tech Spec 3.1.1) **[B0271]** ____

1. **ENSURE** a boration flow path **PER** TRM 15.1.3 is available. ____

2. **LOCK SHUT AND TAG** the following valves:

   - 11 PURIF IX FLUSH & DRN.....1-CVC-131 ____
   - 12 PURIF IX FLUSH & DRN.....1-CVC-141 ____
   - 13 PURIF IX FLUSH/DRAIN.....1-CVC-151 ____

3. **TAG SHUT** the outlet valve of any purification IX loaded with unborated resin, as applicable:

   - 11 PURIF IX OUTLET.....1-CVC-128 ____
   - 12 PURIF IX OUTLET.....1-CVC-138 ____
   - 13 PURIF IX OUTLET.....1-CVC-148 ____

6.2.G RCS DRAINING BETWEEN 100 INCHES PZR LEVEL AND 41 FT ELEVATION (Continued) **INITIALS**

4. **IF** two charging pumps can be disabled
THEN:

   - **TAG** the discharge valves for the two Charging pumps being disabled in the SHUT position:

     - 11 CHG PP DISCH.....1-CVC-166 ____
     - 12 CHG PP DISCH.....1-CVC-172 ____
     - 13 CHG PP DISCH.....1-CVC-178 ____

   - **TAG** the breakers for two Charging pumps being disabled in the DISCONNECT position:

     - 11 Charging pump.....52-1115 ____
     - 12 Charging pump.....52-1415 ____
     - 13 Charging pump...52-1104 **AND** 52-1404 ____

5. **IF** two charging pumps are required for operation,
THEN:

   a. **SAMPLE** the VCT for boron concentration. ____

   b. **VERIFY** VCT boron concentration is greater than or equal to shutdown boron concentration. ____

6. **TAG** the breakers for **BOTH** RC Makeup pumps in the OFF position:

   - 11 RC MAKEUP.....52-10505 ____
   - 12 RC MAKEUP.....52-11505 ____

7. **TAG SHUT** the discharge and suction valves for **BOTH** RC Makeup pumps:

   - 11 RCMU PP DISCHARGE VALVE, 1-CVC-245 ____
   - 11 RCMU PP SUCTION VALVE, 1-CVC-243 ____
   - 12 RCMU PP DISCHARGE VALVE, 1-CVC-248 ____
   - 12 RCMU PP SUCTION VALVE, 1-CVC-246 ____

6.2 RCS DRAINING BETWEEN 100 INCHES PZR LEVEL AND 41 FT ELEVATION (Continued) **INITIALS**

> **NOTE**
> Alternate boundaries may be tagged **IF** ANY of the substeps listed below for limiting Dilution Sources per TS 3.1.1 can **NOT** be met as written (e.g., a listed boundary valve is being overhauled, etc..).

H. **IF** the RC Makeup pumps **ARE** needed for makeup to the RWT, **THEN ENSURE** RCS dilution sources less than 88 GPM. (Ref. Tech Spec 3.1.1) **[B0271]** ____

1. **ENSURE** a boration flow path **PER** TRM 15.1.3 is available. ____

2. **LOCK SHUT AND TAG** the following valves:

   - 11 PURIF IX FLUSH & DRN.....1-CVC-131 ____
   - 12 PURIF IX FLUSH & DRN.....1-CVC-141 ____
   - 13 PURIF IX FLUSH/DRAIN.....1-CVC-151 ____

3. **TAG SHUT** the outlet valve of any purification IX loaded with unborated resin, as applicable:

   - 11 PURIF IX OUTLET.....1-CVC-128 ____
   - 12 PURIF IX OUTLET.....1-CVC-138 ____
   - 13 PURIF IX OUTLET.....1-CVC-148 ____

4. **TAG SHUT** one of the following set of valves to isolate the Charging header:
   (N/A valves not selected)

   - 11 CHG PP DISCH, 1-CVC-166 ____
   - 12 CHG PP DISCH, 1-CVC-172 ____
   - 13 CHG PP DISCH, 1-CVC-178 ____

   OR

   - CHG DISCH TO SI, 1-CVC-269 ____
   - SI TO CHG HDR, 1-CVC-269-MOV ____
   - REGEN HX CHG INLET, 1-CVC-183 ____

5. **TAG** the breakers for the Charging pumps in the DISCONNECT position:

   - 11 Charging pump.....52-1115 ____
   - 12 Charging pump.....52-1415 ____
   - 13 Charging pump...52-1104 **AND** 52-1404 ____

I. **ESTABLISH** a nitrogen blanket on the VCT **PER** OI-2A, CHEMICAL AND VOLUME CONTROL SYSTEM. ____

6.2 RCS DRAINING BETWEEN 100 INCHES PZR LEVEL AND 41 FT ELEVATION (Continued) **INITIALS**

J. **IF** preparing to enter a reduced RCS inventory condition,
THEN ENSURE STP O-55A-1, CONTAINMENT CLOSURE VERIFICATION, has been completed **PER** the requirements of NO-1-114, CONTAINMENT CLOSURE. ____

NOTE
Requirement of NO-1-114, CONTAINMENT CLOSURE.

K. **IF** the RCS will be drained 0.5 feet or more **AND** the Steam Generators are **NOT** available for decay heat removal,
THEN CALCULATE Time To Boil **PER** APPENDIX 15, CALCULATION OF TIME TO BOIL. ____

NOTE
BOTH channels of Reactor Vessel level indication should remain in service until the RCS level is adjusted to just below the reactor vessel flange (below 43.97 ft) in preparation for entering Mode 6. This provides backup RCS level indication.

L. **IF** the RCS is to be drained below the bottom of the Pressurizer (48.5 foot elevation),
THEN PERFORM a comparison check between the RCS level Indicators and the Reactor Vessel level indication **PER** APPENDIX 5, REACTOR VESSEL LEVEL CORRELATION, while draining down.
(N/A if Reactor Vessel level indication is disconnected) **[B0076]** ____

M. **IF** RCS level restrictions will be in place,
AND the Safety Injection Tanks are capable of adding additional inventory to the RCS,
THEN ENSURE the SIT Outlet MOVs are tagged shut:

- 1-SI-614-MOV ____
- 1-SI-624-MOV ____
- 1-SI-634-MOV ____
- 1-SI-644-MOV ____

N. **IF** the RCS is to be drained below the 41 foot elevation,
THEN Steps 6.3.A through 6.3.AA may be performed in parallel with the remainder of this section. ____

6.2 RCS DRAINING BETWEEN 100 INCHES PZR LEVEL AND 41 FT ELEVATION (Continued) **INITIALS**

O. **DETERMINE** the RCS drain path(s) to be used: ____

- ☐ CVCS to WPS: **PERFORM** APPENDIX 6, DRAINING THE RCS VIA CVCS TO WPS, in parallel with the remainder of this section
- ☐ CVCS to the VCT: **PERFORM** APPENDIX 7, DRAINING THE RCS VIA CVCS TO THE VCT, in parallel with the remainder of this section
- ☐ LPSI miniflow to RWT: **PERFORM** APPENDIX 8, DRAINING THE RCS VIA LPSI MINIFLOW TO RWT, in parallel with the remainder of this section
- ☐ RCS Hot Leg drain valves to RCDT: **PERFORM** APPENDIX 9, DRAINING THE RCS VIA RCS DRAIN VALVES, in parallel with the remainder of this section
- ☐ **IF** the Reactor Vessel is defueled, **THEN** OI-3B, SHUTDOWN COOLING may be used.

P. Within one hour **AFTER** lowering Pressurizer level less than 90 inches, **AND** every 12 hours thereafter while in Mode 5, **PERFORM** the following:

1. **ENSURE** requirements of TS SR 3.1.1.2 and 3.1.1.3 are met **AND RECORDED** in the CRO Log for the following:

   - RCS level above the bottom of the hot leg nozzles ____
   - Sources of non-borated water are less than or equal to 88 GPM ____

6.2 RCS DRAINING BETWEEN 100 INCHES PZR LEVEL AND 41 FT ELEVATION (Continued) **INITIALS**

NOTE

When the RCS is draining between the 51 foot elevation and the 39 foot elevation an error may exist between the indicated level and the actual level. The indicated level may be lower than the actual level. The error size will be based on the drain rate. The larger the drain rate the larger the error. **[B0132]**

Q. **IF** at any time during the drain, the Reactor Vessel level indication indicates a void,
THEN VENT the Reactor Vessel Head **AND ALLOW** the space to fill with water as follows:
(N/A if Reactor Vessel level indication does not indicate a void)

1. **OPEN** RX VSL TO QT VENT, 1-RC-103-SV. ____

2. **OPEN** RX VSL VENT B/U, 1-RC-104-SV. ____

3. **WHEN** Quench Tank level rises,
THEN SHUT 1-RC-103-SV **AND** 1-RC-104-SV. ____

R. **IF** draining to reduced inventory is planned,
THEN STOP the drain at 41 foot elevation **AND GO TO** Section 6.3, ENTERING REDUCED INVENTORY CONDITION. ____

6.2 RCS DRAINING BETWEEN 100 INCHES PZR LEVEL AND 41 FT ELEVATION (Continued) **INITIALS**

S. **WHEN** the RCS drain down is complete,
THEN PERFORM the following: (N/A if draining to reduced inventory)

NOTE
LPSI flow alarms may be adjusted as necessary to prevent nuisance alarms.

1. **ADJUST** the setpoints for the LPSI flow alarms on the Refueling Level Cart using ATTACHMENT 4, REFUELING LEVEL CART INSTRUCTIONS:

   - 0CRT4136
     - 1FT306 High Flow Alarm Limit.....150 GPM **ABOVE** SDC flow ____
     - 1FT306 Low Flow Alarm Limit.....150 GPM **BELOW** SDC flow ____
   - 0CRT4137
     - 1FT306 High Flow Alarm Limit.....150 GPM **ABOVE** SDC flow ____
     - 1FT306 Low Flow Alarm Limit.....150 GPM **BELOW** SDC flow ____

6.2.S RCS DRAINING BETWEEN 100 INCHES PZR LEVEL AND 41 FT ELEVATION (Continued) **INITIALS**

NOTE
RCS level alarms may be adjusted as necessary to prevent nuisance alarms. **REFER** to Section 5.0 AD.

2. **ADJUST** the setpoints for RCS level alarms on the Refueling Level Cart using ATTACHMENT 4, REFUELING LEVEL CART INSTRUCTIONS:

   - 0CRT4136
     - 4136 High Level Alarm Limit...0.2 FEET **ABOVE** RCS level ____
     - 4136 Low Level Alarm Limit....0.2 FEET **BELOW** RCS level ____
     - 1LE4139 High Level Alarm Limit...0.2 FEET **ABOVE** RCS level ____
     - 1LE4139 Low Level Alarm Limit....0.2 FEET **BELOW** RCS level ____
     - 1LT4140 High Level Alarm Limit...0.2 FEET **ABOVE** RCS level ____
     - 1LT4140 Low Level Alarm Limit....0.2 FEET **BELOW** RCS level ____
   - 0CRT4137
     - 4137 High Level Alarm Limit...0.2 FEET **ABOVE** RCS level ____
     - 4137 Low Level Alarm Limit....0.2 FEET **BELOW** RCS level ____
     - 1LE4139 High Level Alarm Limit...0.2 FEET **ABOVE** RCS level ____
     - 1LE4139 Low Level Alarm Limit....0.2 FEET **BELOW** RCS level ____
     - 1LT4140 High Level Alarm Limit...0.2 FEET **ABOVE** RCS level ____
     - 1LT4140 Low Level Alarm Limit....0.2 FEET **BELOW** RCS level ____

****** END ******

6.3 ENTERING REDUCED INVENTORY CONDITION [B0073] INITIALS

NOTE

- This section may be performed more than once during a refueling outage. A working copy of this section shall be made before each use.
- The RCS shall be considered in Reduced Inventory when fuel is in the vessel **AND** RCS level is three feet or more below the reactor vessel flange (41 foot elevation)

A. **IF** the Reactor Vessel is defueled,
THEN PERFORM the following:

1. **ENSURE** the Pressurizer Manway is removed **OR** an acceptable RCS vent path is established. ____

NOTE

Use the lowest reading RCS level indicator as actual RCS level during draining.

2. **CHECK** at least 2 RCS level indications are available, **AND** ALL RCS level indications that will be used, agree within 0.5 feet. ____
   - MLMS on the Refueling Level Cart, 4136 ____
   - MLMS on the Refueling Level Cart, 4137 ____
   - RCS level indicator on the Refueling Level Cart, 1LE4139 ____
   - Refueling level indicator on the Refueling Level Cart, 1LT4140 ____
   - Local refueling level indicator, 1-LG-4139 or tygon tube ____
     - **IF** a tygon tube is used as the local refueling level indicator, **THEN WALK DOWN** the entire tube to ensure the tubing is free of kinks, no loop seals, trapped air **OR** debris in the tube. ____

   a. **IF** the indications do **NOT** agree,
   THEN INITIATE a CR to resolve the discrepancy before continuing. ____

   b. **DETERMINE** the target RCS level. ____

   c. **PROCEED** to Step AB. ____

6.3 ENTERING REDUCED INVENTORY CONDITION [B0073] (Continued) **INITIALS**

> **NOTE**
> Steps B through U may be performed concurrently or in any order.

B. **ENSURE** RCS boron concentration satisfies the requirements of NEOP 301 for the present Mode. ____

> **NOTE**
> The time associated with the last performance of PEO 0-24-10-O-2A may be used to determine time to align the 0C DG.

C. **IF** the S/G nozzle dams will be installed,
THEN VERIFY the time to core uncovery (after loss of SDC with nozzle dams installed) is greater than the time to align the 0C DG to the required Bus following a loss of power. **[B0370]** ____

- **CALCULATE** time to core uncovery **PER** APPENDIX 16, CALCULATION OF TIME TO CORE UNCOVERY.

- **IF** no compensatory measure is in place to reduce 0C DG alignment time to less than 1 hour,
THEN 1 hour should be assumed.

D. **ENSURE** the following NO-1-103, CONDUCT OF LOWER MODE OPERATIONS, requirements are in place:

- **VERIFY** the availability of equipment for the required MEE list of NO-1-200, CONTROL OF SHIFT ACTIVITIES.

  - **IF** the manway is removed,
  THEN VERIFY the equipment **PER** attachment for a unit in Reduced Inventory **OR** an approved NO-1-117 High Risk Activity Plan is in effect. ____

  OR

  - **IF** the manway is **NOT** removed,
  THEN VERIFY the equipment **PER** attachment for a unit in Mode 5 or 6 with NO S/G available and manway installed **OR** an approved NO-1-103 Contingency Plan is in effect. ____

- **CONTINUE** logging the MEE in the Shift Turnover sheet ____

- **CONTINUE** checking MEE availability once per 12 hours ____

6.3 ENTERING REDUCED INVENTORY CONDITION [B0073] (Continued) **INITIALS**

CAUTION
The Pressurizer Manway shall be removed when S/G nozzle dams are installed. **[B0072]**

E. **ENSURE** the Pressurizer Manway is removed **OR** an acceptable RCS vent path is established per PWR Reload Analysis as documented in appropriate engineering documents. **[B0072]** ____

F. **ENSURE** RCS level indications in the Control Room and Containment have been properly installed, vented, calibrated **AND** physically walked down. **[B0072]** ____

G. **OBTAIN** Work Group Supervisor signatures in APPENDIX 10, REDUCED INVENTORY RESPONSIBILITY LIST. ____

NOTE
This requirement will carry over to each crew while in Reduced Inventory.

H. **ENSURE** AOP-3B, ABNORMAL SHUTDOWN COOLING CONDITIONS, Attachment titled, Returning Shutdown Cooling to Service has been briefed. ____

1. **DESIGNATE** an operator available to vent LPSI PPs as required, while in Reduced Inventory. ____

I. **ENSURE** the following RCS makeup paths are available:

1. **HPSI** with:

- suction aligned to the RWT **AND** discharge to the RCS ____
- breaker racked in **AND** handswitch in PULL TO LOCK ____
- manual suction, discharge, **AND** mini-flow valves open ____
- MAIN **OR** AUX HPSI HDR isolation valves to at least two RCS loops are operable from the Control Room ____
- MAIN **AND** AUX HPSI HDR isolation valves shut ____

2. **CONTAINMENT SPRAY** with:

- suction aligned to the RWT **AND** discharge to RCS ____
- breaker racked in **AND** handswitch in PULL TO LOCK ____
- manual suction **AND** mini-flow valves open ____
- manual discharge valve shut ____

6.3 ENTERING REDUCED INVENTORY CONDITION [B0073] (Continued) **INITIALS**

J. **VERIFY** the RWT boron concentration is greater than or equal to the requirements of TRM 15.1.3. **[B0270]** ____

K. **ENSURE OPEN** the following vent valves:

- RX VSL VENT ISOL.....1-RC-274 ____
- RX VSL VENT STOP.....1-RC-275 ____
- RX VSL VENT THROT.....1-RC-276 ____

NOTE
At least one channel of RVLMS should remain in operation until the RCS level is adjusted to just below the reactor vessel flange in preparation for entering Mode 6.

L. **IF** this outage will **NOT** require disconnecting of the electrical platform, **THEN ENSURE** at least one channel of RVLMS is available. ____

CAUTION
IF CETs are not available (i.e., head not installed), **THEN** reliable RCS temperature indication will not be available during a loss of SDC unless temporary temperature instrumentation is provided.

M. **IF** the Reactor Vessel Head is in place on top of the Rx Vessel, **THEN REQUEST** IM to install jumpers to provide CET temperature to PAMS from CET groups ZA and ZB. ____

N. **IF** the Reactor Vessel Head will **NOT** be removed, **THEN ENSURE** the desired ZA **AND** ZB CET for use on PAMS. ____

O. **ENSURE** adequate RWT level. **[B0145]**

- **IF** the Reactor Vessel Head is installed, **OR** the Reactor has been shutdown for less than 25 days, **THEN ENSURE** RWT level is greater than 35 feet. ____
- **IF** the Reactor Vessel Head is removed, **AND** the Reactor has been shutdown for 25 days or more, **THEN ENSURE** RWT level is greater than 20 feet. ____

6.3 ENTERING REDUCED INVENTORY CONDITION [B0073] (Continued) **INITIALS**

P. **ENSURE** STP O-55A-1, CONTAINMENT CLOSURE VERIFICATION, has been performed **PER** the requirements of NO-1-114, CONTAINMENT CLOSURE. ____

> **NOTE**
> While the S/Gs are **NOT** available for heat removal, RCS boiling times must be considered for Containment closure deviations.

1. **IF** Containment closure deviations exist, **THEN REQUEST** the CRS to perform the following: **[B0072]**

   - **CALCULATE** RCS time to boiling **PER** APPENDIX 15, CALCULATION OF TIME TO BOIL ____
   - **ENSURE ALL** Containment closure deviations are approved by the GS-SO **AND** restoration plans are in place **PER** NO-1-114, CONTAINMENT CLOSURE, to isolate the penetration **OR** restore the deviation within the RCS time to boil, should a sustained loss of SDC occur ____
   - **CONTINUE** calculating RCS time to boil on a shiftly basis **AND RECORDING** the time to boil on the Shift Turnover Sheet ____

Q. **IF** CET temperature indication is available, **THEN PERFORM** the following:

1. **CHECK** that the CET temperature indication agrees with Shutdown Cooling temperature from RCS, 1-TR-351, within 10° F. ____
2. **ENSURE** 4 CETs (two from group ZA and two from group ZB) are available **PER** NO-1-103. ____
3. **ESTABLISH** a high temperature alarm on the plant computer no more than 20° F above CET temperature, for at least two independent CETs (one from group ZA and one from group ZB) ____
4. **IF EITHER** the CET temperature recorders **OR** the computer temperature alarm is non-functional, **THEN COMMENCE** logging CET temperature twice per hour in the CRO Log. ____

> **NOTE**
> While in reduced inventory, RCS temperature shall be maintained between 100° F and 110° F.

R. **LOWER** RCS temperature to between 100° F and 110° F. ____

6.3 ENTERING REDUCED INVENTORY CONDITION [B0073] (Continued) **INITIALS**

S. **ENSURE** MLMS Density Compensation on the Refueling Level Cart is updated using ATTACHMENT 4, REFUELING LEVEL CART INSTRUCTIONS:

- **SET** RCS temperature on 0CRT4136 ____
- **SET** RCS temperature on 0CRT4137 ____

T. **IF** CET temperature indication is available on PAMS, **THEN ADJUST** the temperature alarm setpoint **PER** OI-1I, Post Accident Monitoring System Instrumentation, 10° F above the CET input temperature. ____

6.3 ENTERING REDUCED INVENTORY CONDITION [B0073] (Continued) **INITIALS**

NOTE

- Use the lowest reading RCS level indicator as actual RCS level during draining.
- 1LT4140 accuracy is **NOT** adequate to be used as an RCS level indicator in Reduced Inventory. It may be used for trending only.
- Operating experience has shown that due to Shutdown Cooling suction flow on that hot leg, 4136 indication will bounce when RCS level is at the top of the hot leg.
- When RCS level is above the top of the hot leg, 1LE4138 may become erratic or non existent. If being used as the second required level indication, though out of range, 1LE4138 must be available at all times in the event of a transient.
- Generic Letter 88-17 requires at least two independent and continuous RCS water level indications whenever the RCS is in a reduced inventory condition.
  If the indication is not located in the Control Room it must have provision for providing immediate water level values to an operator in the Control Room if significant changes occur (ie. radio or phone). Observations should be recorded at an interval no greater than 15 minutes. These observations may be suspended if evacuation of the observer from the remote readout area is required.
- Per Generic Letter 88-17 ordinary plastic tubing (tygon tube) does **NOT** meet the concept of reliable instumentation for use in Reduced Inventory.
- 1LE4139 and 1-LG-4139 share a common variable leg and are **NOT** independent from each other. These instruments are independent from 4136, 4137 and 1LE4138. 4136, 4137 and 1LE4138 are independent from each other.
- 1-LG-4139 is **NOT** a preferred instrument due to **NOT** being automatically and continuously monitored and alarmed.
- Operating experience has shown that 1LE4139 may lag behind the other level indications when draining.

U. **VERIFY** RCS level indications for Reduced Inventory. **[B0597]**

1. **CHECK** at least 2 independent RCS level indications are available: ____
   - MLMS on the Refueling Level Cart, 4136 ____
   - MLMS on the Refueling Level Cart, 4137 ____
   - RCS level indicator on the Refueling Level Cart, 1LE4139 ____
   - Local refueling level indicator, 1-LG-4139 ____
   - **IF** 1LE4138 will be used,
     THEN VERIFY 1LE4138 is in service and has been calibrated within 5 hours of entering Reduced Inventory. ____

6.3.U ENTERING REDUCED INVENTORY CONDITION [B0073] (Continued) **INITIALS**

2. **CHECK** ALL RCS level indications that will be used, agree within 0.5 feet: ____

   - MLMS on the Refueling Level Cart, 4136
   - MLMS on the Refueling Level Cart, 4137
   - RCS level indicator on the Refueling Level Cart, 1LE4139
   - Local refueling level indicator, 1-LG-4139

   a. **IF** the indications do **NOT** agree, **THEN INITIATE** a CR to resolve the discrepancy before continuing. ____

CAUTION
Except for emergencies, permission is required from the M-NO or the GS-SO to drain the RCS below the 37.5 foot elevation. Minimize LPSI Pumps shifts while the RCS is below the 37.5 foot elevation. Minimum level to drain the RCS is 36.83 foot elevation.

V. **DETERMINE** the target RCS level. ____

   - **IF** RVLMS is available **AND** outage activity allows, **THEN** the target RCS level should be set to clear the 50 inch RVLMS level sensor. ____

NOTE
Requirement of NO-1-114, CONTAINMENT CLOSURE.

W. **IF** the RCS will be drained 0.5 feet or more, **THEN CALCULATE** Time To Boil **PER** APPENDIX 15, CALCULATION OF TIME TO BOIL. ____

X. **ENSURE** the following are assigned: **[B0072] [B0381]**

   - Designated Lead Point of Contact **PER** NO-1-117 ____
   - Dedicated SRO **PER** NO-1-200 ____

Y. **REQUEST** the Shift Manager review **ALL** containment closure deviations **AND** NO-1-117 HRA and contingency plans within 3 hours prior to draining the RCS. ____

Z. **SUSPEND ALL** evolutions that may cause an RCS **OR** SDC perturbation. ____

6.3 ENTERING REDUCED INVENTORY CONDITION [B0073] (Continued) **INITIALS**

AA. **OBTAIN** final authorization signatures in APPENDIX 10, REDUCED INVENTORY RESPONSIBILITY LIST. ____

NOTE
Cameras may be used to monitor the local level indication in the Control Room.

AB. **IF** local monitoring of the local refueling level indicator, 1-LG-4139 will be used,
THEN PERFORM the following:

1. **STATION** a Containment Refueling Level Watch with communication available with the Control Room, with the following duties:
(N/A if camera is used) ____

   - Continuously **MONITOR** the local Refueling Level indicator **AND REPORT** the level to the Control Room every 15 minutes

   - Immediately **NOTIFY** the Control Room of sudden **OR** unexpected changes in RCS level

2. **RECORD** level indications that are being monitored locally on ATTACHMENT 5, RCS LEVEL LOG. ____

6.3 ENTERING REDUCED INVENTORY CONDITION [B0073] (Continued) **INITIALS**

NOTE

SDC Flow Control Valve, 1-SI-306-CV, fails open on a loss of Instrument Air. Therefore, SDC flow is controlled by throttling the LPSI Header valves to prevent RCS vortexing at the SDC suction in the event of a loss of Instrument Air.

CAUTION

To prevent damage to the motor operators, LPSI Header valves should **NOT** be jogged more than 5 times in 2 minutes, allowing at least 5 minutes for the motor and overload relay to cool before operating the MOV again. To allow the MOV motor to coast to a stop before reversing direction, there should be a wait of approximately 5 seconds before reversing direction of the MOV valve operator. **[B0038]**

AC. **IF** the RCS is to be drained to between 41 foot elevation and 37.6 foot elevation,
THEN ESTABLISH LPSI flow control by performing ONE of the following:
(N/A if not applicable, or preparing for vacuum fill)

- **IF** 1LE4138 will **NOT** be used as one of the required RCS level indications,
  THEN:

  1. **VERIFY** no more than one LPSI pump operating. ____

  2. **ADJUST** SDC Flow Controller, 1-FIC-306, to obtain a SDC flowrate between 3200-3400 GPM. ____

  3. **THROTTLE** the four (4) LPSI HDR valves in PULL TO OVERRIDE to obtain between 800 and 850 GPM in each LPSI Loop. ____

  4. **ADJUST** SDC Flow Controller, 1-FIC-306, to obtain a SDC flowrate of approximately 3000 GPM. ____

6.3.AC ENTERING REDUCED INVENTORY CONDITION [B0073] (Continued) **INITIALS**

NOTE
LPSI flow alarms may be adjusted as necessary to prevent nuisance alarms.

5. **ADJUST** the setpoints for the LPSI flow alarms on the Refueling Level Cart using ATTACHMENT 4, REFUELING LEVEL CART INSTRUCTIONS:

   - 0CRT4136
     - 1FT306 High Flow Alarm Limit.....3100 GPM ____
     - 1FT306 Low Flow Alarm Limit.....2900 GPM ____
   - 0CRT4137
     - 1FT306 High Flow Alarm Limit.....3100 GPM ____
     - 1FT306 Low Flow Alarm Limit.....2900 GPM ____

OR

NOTE
SDC flow rates greater than 2000 GPM may cause the indication provided by 1LE4138 to become erratic or non existent due to increased amount of water turbulence in the hot leg.

- **IF** 1LE4138 will be used as one of the required RCS level indications,
  THEN:

  1. **VERIFY** no more than one LPSI pump operating. ____

NOTE
1-FIC-306 is placed in manual when throttling LPSI HDR isolation valves, to prevent 1-SI-306-CV from opening trying to maintain flow, thus robbing flow from 1-SI-657-CV.

  2. **PLACE** SDC Flow Controller, 1-FIC-306, in MANUAL. ____

CAUTION
The boration flow path shall be aligned to a loop with SDC flow.

  3. **ENSURE** a LPSI HDR isolation is open in the same loop as the boration flow path **AND SHUT** two (2) LPSI HDR isolation valves **AND ENSURE** they are in PULL TO OVERRIDE. ____

6.3.AC ENTERING REDUCED INVENTORY CONDITION [B0073] (Continued) **INITIALS**

CAUTION
A reduction in RCS boron concentration from a source whose boron concentration is LESS THAN the present SDM requirements of the COLR, is **NOT** permitted when RCS flow is less than 3000 GPM.

4. **THROTTLE** the remaining two (2) LPSI HDR valves in PULL TO OVERRIDE to obtain between 950-1000 GPM in each LPSI Loop. ____

NOTE
Maximum flow to maintain stability on 1LE4138 is 2000 GPM. During draining the additional drain flow past 1LE4138 is additive to the flow value observed on 1-FIC-306.

5. **ADJUST** SDC Flow Controller, 1-FIC-306, to obtain a SDC flowrate between 1750-1800 GPM. ____

   a. **IF** 1-FIC-306 is shut **AND** SDC flowrate is greater than 1800 GPM,
   THEN ADJUST the SDC TEMP CONTR, 1-HIC-3657 to lower flow to less than 1800 GPM. ____

6. **IF** desired to place 1-FIC-306 in AUTO,
   THEN PERFORM the following:

   a. **ADJUST** the setpoint on 1-FIC-306 to match SDC flow. ____

   b. **PLACE** 1-FIC-306 in AUTO. ____

NOTE
LPSI flow alarms may be adjusted as necessary to prevent nuisance alarms.

7. **ADJUST** the setpoints for the LPSI flow alarms on the Refueling Level Cart using ATTACHMENT 4, REFUELING LEVEL CART INSTRUCTIONS:

   - 0CRT4136
     - 1FT306 High Flow Alarm Limit.....1900 GPM ____
     - 1FT306 Low Flow Alarm Limit.....1700 GPM ____
   - 0CRT4137
     - 1FT306 High Flow Alarm Limit.....1900 GPM ____
     - 1FT306 Low Flow Alarm Limit.....1700 GPM ____

6.3 ENTERING REDUCED INVENTORY CONDITION [B0073] (Continued) **INITIALS**

AD. **IF** preparing for vacuum fill,
THEN ESTABLISH LPSI flow control **PER** 6.16.A.16.
(N/A if not preparing for vacuum fill) ____

NOTE
SDC Flow Control Valve, 1-SI-306-CV, fails open on a loss of Instrument Air. Therefore, SDC flow is controlled by throttling two (2) LPSI Header valves to prevent RCS vortexing at the SDC suction in the event of a loss of Instrument Air. **[B0026]**

CAUTION
To prevent damage to the motor operators, LPSI Header valves should **NOT** be jogged more than 5 times in 2 minutes, allowing at least 5 minutes for the motor and overload relay to cool before operating the MOV again. To allow the MOV motor to coast to a stop before reversing direction, there should be a wait of approximately 5 seconds before reversing direction of the MOV valve operator. **[B0038]**

AE. **IF** the RCS is to be drained to **OR** below 37.6 foot elevation,
THEN ESTABLISH LPSI flow control using two (2) LPSI Header valves as follows: **[B0072]**

1. **VERIFY** no more than one LPSI pump operating. ____

NOTE
1-FIC-306 is placed in manual when throttling LPSI HDR isolation valves, to prevent 1-SI-306-CV from opening trying to maintain flow, thus robbing flow from 1-SI-657-CV.

2. **PLACE** SDC Flow Controller, 1-FIC-306, in MANUAL. ____

CAUTION
The boration flow path shall be aligned to a loop with SDC flow.

3. **ENSURE** a LPSI HDR isolation is open in the same loop as the boration flow path **AND SHUT** two (2) LPSI HDR isolation valves **AND ENSURE** they are in PULL TO OVERRIDE. ____

CAUTION
A reduction in RCS boron concentration from a source whose boron concentration is LESS THAN the present SDM requirements of the COLR, is **NOT** permitted when RCS flow is less than 3000 GPM.

4. **THROTTLE** the remaining two (2) LPSI HDR valves in PULL TO OVERRIDE to obtain between 950-1000 GPM in each LPSI Loop. ____

6.3.AE ENTERING REDUCED INVENTORY CONDITION [B0073] (Continued) **INITIALS**

NOTE
Maximum flow to maintain stability on 1-LI-4138 is 2000 GPM. During draining the additional drain flow past 1-LI-4138 is additive to the flow value observed on 1-FIC-306.

5. **ADJUST** SDC Flow Controller, 1-FIC-306, to obtain a SDC flowrate between 1750-1800 GPM. ____

   a. **IF** 1-FIC-306 is shut **AND** SDC flowrate is greater than 1800 GPM,
   THEN ADJUST the SDC TEMP CONTR, 1-HIC-3657 to lower flow to less than 1800 GPM. ____

6. **IF** desired to place 1-FIC-306 in AUTO,
   THEN PERFORM the following:

   a. **ADJUST** the setpoint on 1-FIC-306 to match SDC flow. ____

   b. **PLACE** 1-FIC-306 in AUTO. ____

NOTE
LPSI flow alarms may be adjusted as necessary to prevent nuisance alarms.

7. **ADJUST** the setpoints for the LPSI flow alarms on the Refueling Level Cart using ATTACHMENT 4, REFUELING LEVEL CART INSTRUCTIONS:

   - 0CRT4136
     - 1FT306 High Flow Alarm Limit.....1900 GPM ____
     - 1FT306 Low Flow Alarm Limit.....1700 GPM ____
   - 0CRT4137
     - 1FT306 High Flow Alarm Limit.....1900 GPM ____
     - 1FT306 Low Flow Alarm Limit.....1700 GPM ____

6.3 ENTERING REDUCED INVENTORY CONDITION [B0073] (Continued) INITIALS

NOTE

- The remaining steps in this section should be performed in order.
- Section 6.2, RCS DRAINING BETWEEN 100 INCHES PZR LEVEL AND 41 FT ELEVATION must be completed prior to draining RCS.
- ALL previous steps in Section 6.3, ENTERING REDUCED INVENTORY CONDITION must be completed prior to draining RCS.

CAUTION

If more than one drain path will be required, shifting between drain paths should be performed at the highest RCS level possible. This will reduce perturbations while in reduced inventory conditions.

AF. **DETERMINE** RCS drain path(s) to be used: ____

- ☐ CVCS to WPS: **PERFORM** APPENDIX 6, DRAINING THE RCS VIA CVCS TO WPS, in parallel with the remainder of this section
- ☐ CVCS to the VCT: **PERFORM** APPENDIX 7, DRAINING THE RCS VIA CVCS TO THE VCT, in parallel with the remainder of this section
- ☐ LPSI miniflow to RWT: **PERFORM** APPENDIX 8, DRAINING THE RCS VIA LPSI MINIFLOW TO RWT, in parallel with the remainder of this section
- ☐ RCS Hot Leg drain valves to RCDT: **PERFORM** APPENDIX 9, DRAINING THE RCS VIA RCS DRAIN VALVES, in parallel with the remainder of this section
- ☐ **IF** the Reactor Vessel is defueled, **THEN** OI-3B, SHUTDOWN COOLING may be used.

CAUTION

Operating Experience has shown that purification should be secured slowly to reduce the affects on RCS temperature.

AG. **IF** draining via CVCS to WPS will be used, **THEN ENSURE** purification is secured:

1. **ENSURE SHUT** SDC Supply to CVCS B/U, 1-SI-464. ____
2. **ENSURE SHUT** CVCS TO SDC, 1-SI-475. ____

6.3 ENTERING REDUCED INVENTORY CONDITION [B0073] (Continued) **INITIALS**

AH. **NOTIFY** Radiation Safety Supervision the plant will be drained to a reduced inventory condition, and the path to be used. ____

AI. **REFER** to TABLE 4, INVENTORY BALANCE - RCS AND SOURCE VOLUMES to periodically **PERFORM** an inventory balance between the RCS and source volumes prior to and while draining the RCS. ____

AJ. **IF** Reactor Vessel level indication is available, **THEN PERFORM** a comparison check between Reactor Vessel level and Refueling Level indications **PER** APPENDIX 5, REACTOR VESSEL LEVEL CORRELATION, while draining the RCS. (N/A if Reactor Vessel level indication is not available) ____

NOTE

- **IF** the S/G tubes are being gravity drained **AND** RCS level reaches the top of the Hot Leg (39 foot elevation), **THEN** level fluctuations will occur until the water held in the S/G tubes by vacuum is released.
- When the RCS is draining between the 51 foot elevation and the 39 foot elevation an error may exist between the indicated level and the actual level due to the size of the Reactor Vessel vent line. The indicated level may be lower than the actual level. The error size will be based on the drain rate. The larger the drain rate the larger the error. **[B0132]**
- When draining the RCS with the S/G tubes full, RCS level indication will lower until the level reaches the top of the hot leg (39 foot elevation). The level will stabilize at this level until the S/G tubes drain (S/G tube volume is 1145 ft^3 per S/G, approximately 17,100 gals total). When the S/G tubes are drained, level will lower again.

AK. **IF** RCS level is being lowered to gravity drain the S/G tubes, **THEN CONSIDER** the S/G tubes dry when RCS level has been at least 1.0 feet below the top of the Hot Leg (38.08 feet) **AND** level on at least two indicators has been stable for 30 minutes. ____

1. **REQUEST** Plant Chemistry obtain an RCS boron sample. **[B0605]** ____

6.3 ENTERING REDUCED INVENTORY CONDITION [B0073] (Continued) **INITIALS**

NOTE
SDC flow rates greater than 2000 GPM may cause the indication provided by 1LE4138 to become erratic or non existent due to increased amount of water turbulence in the hot leg.

AL. **IF** 1LE4138 will be used as one of the two required RCS level indications,
AND RCS level is at 38.6 feet,
THEN PERFORM the following:

1. **IF** 1LE4138 has come on scale,
THEN STOP the drain and **CHECK** RCS level indicator, 1LE4138 is indicating on scale **AND** stable for 10 minutes. ____

a. **IF** fuel is in the vessel,
THEN PERFORM the following:

(1) **CHECK** ALL RCS level indications in use agree within 0.5 feet. **[B0597]** ____

- MLMS on the Refueling Level Cart, 4136 ____
- MLMS on the Refueling Level Cart, 4137 ____
- RCS level indicator on the Refueling Level Cart, 1LE4138 ____
- RCS level indicator on the Refueling Level Cart, 1LE4139 ____
- Local refueling level indicator, 1-LG-4139 ____

(2) **IF** the indications do **NOT** agree,
THEN INITIATE a CR **AND RESOLVE** the discrepancy before continuing.

(a) **IF** the oscilloscope is installed on 1LT4138 in the CSR,
THEN PERFORM the following:

1) **STATION** an operator in direct communication with the Control Room. ____

2) **RECORD** 1LT4138 readings at intervals no greater than 15 minutes using APPENDIX 14, OBTAINING 1LT4138 READINGS USING OSCILLOSCOPE to determine RCS level. ____

6.3.AL ENTERING REDUCED INVENTORY CONDITION [B0073] (Continued) **INITIALS**

2. **IF** 1LE4138 has **NOT** come on scale,
   THEN PERFORM the following:

   a. **CONTINUE** draining the RCS to 38.4 feet. ____

   b. **STOP** the drain and **CHECK** RCS level indicator, 1LE4138 is indicating on scale **AND** stable for 10 minutes. ____

   c. **IF** fuel is in the vessel,
      THEN PERFORM the following:

      (1) **CHECK** ALL RCS level indications in use agree within 0.5 feet. **[B0597]** ____

      - MLMS on the Refueling Level Cart, 4136 ____
      - MLMS on the Refueling Level Cart, 4137 ____
      - RCS level indicator on the Refueling Level Cart, 1LE4138 ____
      - RCS level indicator on the Refueling Level Cart, 1LE4139 ____
      - Local refueling level indicator, 1-LG-4139 ____

      (2) **IF** the indications do **NOT** agree,
      THEN INITIATE a CR **AND RESOLVE** the discrepancy before continuing.

      (a) **IF** the oscilloscope is installed on 1LT4138 in the CSR,
      THEN PERFORM the following:

      1) **STATION** an operator in direct communication with the Control Room. ____

      2) **RECORD** 1LT4138 readings at intervals no greater than 15 minutes using APPENDIX 14, OBTAINING 1LT4138 READINGS USING OSCILLOSCOPE to determine RCS level. ____

6.3 ENTERING REDUCED INVENTORY CONDITION [B0073] (Continued) **INITIALS**

NOTE

- 1LT4140 accuracy is **NOT** adequate to be used as an RCS level indicator in Reduced Inventory. It may be used for trending only.
- Generic Letter 88-17 requires at least two independent and continuous RCS water level indications whenever the RCS is in a reduced inventory condition.
  If the indication is not located in the Control Room it must have provision for providing immediate water level values to an operator in the Control Room if significant changes occur (ie. radio or phone). Observations should be recorded at an interval no greater than 15 minutes. These observations may be suspended if evacuation of the observer from the remote readout area is required.
- Per Generic Letter 88-17 ordinary plastic tubing (tygon tube) does **NOT** meet the concept of reliable instumentation for use in Reduced Inventory.
- 1LE4139 and 1-LG-4139 share a common variable leg and are **NOT** independent from each other. These instruments are independent from 1LE4138, 4136 and 4137. 4136, 4137 and 1LE4138 are independent from each other.
- 1-LG-4139 is **NOT** a preferred instrument due to **NOT** being automatically and continuously monitored and alarmed.

AM. **IF** while in Reduced Inventory the required RCS level indication is lost,
THEN PERFORM the following:
(N/A if RCS level indication is not lost) ____

CAUTION
Draining the RCS is **NOT** permitted with less than the required instrumentation.

1. **IF** draining the RCS,
   THEN STOP draining the RCS. ____

6.3.AM ENTERING REDUCED INVENTORY CONDITION [B0073] (Continued) **INITIALS**

2. **USE** all available indications to monitor RCS level:

   - 4136 ____
   - 4137 ____
   - 1LE4138 ____
   - 1LE4139 ____
   - 1-LG-4139 **OR** tygon tube ____
   - 1LT4140 ____

> **NOTE**
> Fluctuations in LPSI pump parameters may be indicative of actual level lower than indicated.

   - LPSI pump suction pressure, discharge pressure, running amps and flow ____

3. **RECORD** readings being used on ATTACHMENT 5, RCS LEVEL LOG. ____

> **NOTE**
> Cameras may be used to monitor the local level indication in the Control Room.

4. **EVALUATE** establishing local RCS level monitoring. ____

   a. **STATION** an operator in direct communication with the Control Room.
   (N/A if camera is used) ____

> **NOTE**
> APPENDIX 14, OBTAINING 1LT4138 READINGS USING OSCILLOSCOPE may be used to obtain readings from 1LT4138 if the oscilloscope is installed in the CSR.

   b. **RECORD** level indications that are being monitored locally at intervals no greater than 15 minutes. ____

5. **SUSPEND ALL** work that could affect RCS inventory **OR** other level instrumentation. ____

6. **MAKE** preparations to refill the RCS and exit Reduced Inventory. ____

6.3.AM ENTERING REDUCED INVENTORY CONDITION [B0073] (Continued) **INITIALS**

7. **EVALUATE** the level indication failure and the risk of remaining in Reduced Inventory. _____ SRO

   - **IF** one of the required RCS level indications is lost, **AND** will **NOT** be restored within one hour, **THEN FILL** the RCS to exit Reduced Inventory.

     a. **IF** the RCS is **NOT** in a conditon to allow filling, **THEN CONSULT** with Outage Management to determine the most expeditious means of restoring RCS integrity.

   - **IF** both of the required RCS level indications are lost, **THEN FILL** the RCS to exit Reduced Inventory.

     a. **IF** the RCS is **NOT** in a conditon to allow filling, **THEN CONSULT** with Outage Management to determine the most expeditious means of restoring RCS integrity.

6.3 ENTERING REDUCED INVENTORY CONDITION [B0073] (Continued) **INITIALS**

> **NOTE**
> RCS level alarms may be adjusted as necessary to prevent nuisance alarms. **REFER** to Section 5.0 AD.

AN. **WHEN** RCS draining is complete,
THEN ADJUST the setpoints for RCS level alarms on the Refueling Level Cart using ATTACHMENT 4, REFUELING LEVEL CART INSTRUCTIONS:

- 0CRT4136
  - 4136 High Level Alarm Limit...0.2 FEET **ABOVE** RCS level ____
  - 4136 Low Level Alarm Limit....0.2 FEET **BELOW** RCS level ____
  - 1LE4138 High Level Alarm Limit...0.2 FEET **ABOVE** RCS level ____
  - 1LE4138 Low Level Alarm Limit....0.2 FEET **BELOW** RCS level ____
  - 1LE4139 High Level Alarm Limit...0.2 FEET **ABOVE** RCS level ____
  - 1LE4139 Low Level Alarm Limit....0.2 FEET **BELOW** RCS level ____
  - 1LT4140 High Level Alarm Limit...0.2 FEET **ABOVE** RCS level ____
  - 1LT4140 Low Level Alarm Limit....0.2 FEET **BELOW** RCS level ____
- 0CRT4137
  - 4137 High Level Alarm Limit...0.2 FEET **ABOVE** RCS level ____
  - 4137 Low Level Alarm Limit....0.2 FEET **BELOW** RCS level ____
  - 1LE4138 High Level Alarm Limit...0.2 FEET **ABOVE** RCS level ____
  - 1LE4138 Low Level Alarm Limit....0.2 FEET **BELOW** RCS level ____
  - 1LE4139 High Level Alarm Limit...0.2 FEET **ABOVE** RCS level ____
  - 1LE4139 Low Level Alarm Limit....0.2 FEET **BELOW** RCS level ____
  - 1LT4140 High Level Alarm Limit...0.2 FEET **ABOVE** RCS level ____
  - 1LT4140 Low Level Alarm Limit....0.2 FEET **BELOW** RCS level ____

AO. **IF** the Containment Refueling Level Watch was stationed,
AND RCS level has been stable at its target level for at least 30 minutes,
THEN DISCONTINUE the Containment Refueling Level Watch. ____

6.3 ENTERING REDUCED INVENTORY CONDITION [B0073] (Continued) **INITIALS**

AP. **NOTIFY** Radiation Safety Supervision the RCS draining is complete and the final RCS level. ____

****** END ******

6.4 REDUCED INVENTORY OPERATIONS[B0073] INITIALS

NOTE
The RCS shall be considered in reduced inventory when fuel is in the vessel **AND** RCS level is three feet or more below the reactor vessel flange (41 foot elevation)

A. **MAINTAIN** RCS temperature between 100 and 110° F unless otherwise directed by the GS-SO. ____

NOTE

- 1LT4140 accuracy is **NOT** adequate to be used as an RCS level indicator in Reduced Inventory. It may be used for trending only.
- Generic Letter 88-17 requires at least two independent and continuous RCS water level indications whenever the RCS is in a reduced inventory condition.
  If the indication is not located in the Control Room it must have provision for providing immediate water level values to an operator in the Control Room if significant changes occur (ie. radio or phone). Observations should be recorded at an interval no greater than 15 minutes. These observations may be suspended if evacuation of the observer from the remote readout area is required.
- Per Generic Letter 88-17 ordinary plastic tubing (tygon tube) does **NOT** meet the concept of reliable instumentation for use in Reduced Inventory.
- 1LE4139 and 1-LG-4139 share a common variable leg and are **NOT** independent from each other. These instruments are independent from 1LE4138, 4136 and 4137. 4136, 4137 and 1LE4138 are independent from each other.
- 1-LG-4139 is **NOT** a preferred instrument due to **NOT** being automatically and continuously monitored and alarmed.

B. **IF** while in Reduced Inventory the required RCS level indication is lost, **THEN PERFORM** the following:
(N/A if RCS level indication is not lost) ____

CAUTION
Draining the RCS is **NOT** permitted with less than the required instrumentation.

1. **IF** draining the RCS,
   THEN STOP draining the RCS. ____

6.4.B REDUCED INVENTORY OPERATIONS[B0073] (Continued) **INITIALS**

2. **USE** all available indications to monitor RCS level:

   - 4136 ____
   - 4137 ____
   - 1LE4138 ____
   - 1LE4139 ____
   - 1-LG-4139 **OR** tygon tube ____
   - 1LT4140 ____

> **NOTE**
> Fluctuations in LPSI pump parameters may be indicative of actual level lower than indicated.

   - LPSI pump suction pressure, discharge pressure, running amps and flow ____

3. **RECORD** readings being used on ATTACHMENT 5, RCS LEVEL LOG. ____

> **NOTE**
> Cameras may be used to monitor the local level indication in the Control Room.

4. **EVALUATE** establishing local RCS level monitoring. ____

   a. **STATION** an operator in direct communication with the Control Room.
   (N/A if camera is used) ____

> **NOTE**
> APPENDIX 14, OBTAINING 1LT4138 READINGS USING OSCILLOSCOPE may be used to obtain readings from 1LT4138 if the oscilloscope is installed in the CSR.

   b. **RECORD** level indications that are being monitored locally at intervals no greater than 15 minutes. ____

5. **SUSPEND ALL** work that could affect RCS inventory **OR** other level instrumentation. ____

6. **MAKE** preparations to refill the RCS and exit Reduced Inventory. ____

6.4.B REDUCED INVENTORY OPERATIONS[B0073] (Continued) **INITIALS**

7. **EVALUATE** the level indication failure and the risk of remaining in Reduced Inventory. _____ SRO

   - **IF** one of the required RCS level indications is lost, **AND** will **NOT** be restored within one hour, **THEN FILL** the RCS to exit Reduced Inventory.

     a. **IF** the RCS is **NOT** in a conditon to allow filling, **THEN CONSULT** with Outage Management to determine the most expeditious means of restoring RCS integrity.

   - **IF** both of the required RCS level indications are lost, **THEN FILL** the RCS to exit Reduced Inventory.

     a. **IF** the RCS is **NOT** in a conditon to allow filling, **THEN CONSULT** with Outage Management to determine the most expeditious means of restoring RCS integrity.

C. **ENSURE** the following requirements are met:

1. **IF** Containment closure deviations exist, **THEN REQUEST** the CRS to perform the following:

   - **ENSURE ALL** Containment closure deviations are approved by the GS-SO **AND** restoration plans are in place **PER** NO-1-114, CONTAINMENT CLOSURE, to isolate the penetration **OR** restore the deviation within the lesser of 2 hours or RCS time to boil, should a sustained loss of SDC occur ____

   - **CONTINUE** calculating RCS time to boil on a shiftly basis **AND RECORDING** the time to boil on the Shift Turnover Sheet. **[B0072]** ____

2. **ENSURE** the the following NO-1-103, CONDUCT OF LOWER MODE OPERATIONS, requirements are in place:

   - **VERIFY** the availibility of equipment for the required MEE list of NO-1-200, CONTROL OF SHIFT ACTIVITIES.

     - **IF** the manway is removed, **THEN VERIFY** the equipment **PER** attachment for a unit in Reduced Inventory **OR** an approved NO-1-103 Contingency Plan is in effect. ____

     OR

     - **IF** the manway is **NOT** removed, **THEN VERIFY** the equipment **PER** attachment for a unit in Mode 5 or 6 with NO S/G available and manway installed **OR** an approved NO-1-103 Contingency Plan is in effect. ____

6.4.C.2 REDUCED INVENTORY OPERATIONS[B0073] (Continued) **INITIALS**

- **CONTINUE** logging the MEE in the Shift Turnover sheet ____
- **CONTINUE** checking MEE availability once per 12 hours ____

D. **IF** S/G nozzle dams are installed,
THEN ENSURE the following requirements are met:

- Maintenance may be started on **ONE** RCP seal after the unit is shutdown for **SEVEN** days ____
- Maintenance that requires a cold leg opening other than **ONE** RCP seal, shall **NOT** be initiated until after the unit has been shutdown for **TEN** days **[B0089]** ____
- A RCP cover (Upper-half casing) shall **NOT** be removed ____

E. **DOCUMENT** any evolution that may cause RCS or SDC perturbations and enhanced monitoring requirements for that evolution in APPENDIX 12, RCS/SDC PERTURBATION **LOG [B0138],** as follows:

1. **OBTAIN** Shift Manager review and approval of the evolution. ____
2. **LOG** the perturbation and the necessary special precautions and enhanced monitoring in the CRO log. ____
3. **OBTAIN** Shift Manager authorization to terminate the special precautions and enhanced monitoring. ____

F. **WHEN** work is to be performed in or around openings in the RCS **OR** personnel safety may be directly effected by RCS level,
THEN INITIATE ATTACHMENT 1, ESTABLISHING SAFE WORKING CONDITIONS FOR RCS MAINTENANCE. **[B0072]** ____

6.4 REDUCED INVENTORY OPERATIONS[B0073] (Continued) **INITIALS**

G. **IF** needed,
THEN DRAIN the RCS while in reduced inventory **PER** APPENDIX 6, APPENDIX 7, APPENDIX 8 **OR** APPENDIX 9, **WITH** the following additional requirements:

NOTE
Maximum flow to maintain stability on 1IE4138 is 2000 GPM. During draining the additional drain flow past 1LE4138 is additive to the flow value observed on 1-FIC-306.

1. **IF** the RCS is to be drained to **OR** below 37.6 foot elevation,
AND SDC flowrate is greater than 1800 GPM,
THEN PERFORM the following:

NOTE
1-FIC-306 is placed in manual when throttling LPSI HDR isolation valves, to prevent 1-SI-306-CV from opening trying to maintain flow, thus robbing flow from 1-SI-657-CV.

a. **PLACE** SDC Flow Controller, 1-FIC-306, in MANUAL. ____

CAUTION
The boration flow path shall be aligned to a loop with SDC flow.

b. **ENSURE** a LPSI HDR isolation is open in the same loop as the boration flow path **AND SHUT** two (2) LPSI HDR isolation valves **AND ENSURE** they are in PULL TO OVERRIDE. ____

CAUTION
- To prevent damage to the motor operators, LPSI Header valves should **NOT** be jogged more than 5 times in 2 minutes, allowing at least 5 minutes for the motor and overload relay to cool before operating the MOV again. To allow the MOV motor to coast to a stop before reversing direction, there should be a wait of approximately 5 seconds before reversing direction of the MOV valve operator. **[B0038]**
- A reduction in RCS boron concentration from a source whose boron concentration is LESS THAN the present SDM requirements of the COLR, is **NOT** permitted when RCS flow is less than 3000 GPM.

c. **THROTTLE** the remaining two (2) LPSI HDR valves in PULL TO OVERRIDE to obtain between 950-1000 GPM in each LPSI Loop. ____

6.4.G.1 REDUCED INVENTORY OPERATIONS[B0073] (Continued) **INITIALS**

d. **ADJUST** SDC Flow Controller, 1-FIC-306, to obtain a SDC flowrate between 1750-1800 GPM. ____

(1) **IF** 1-FIC-306 is shut **AND** SDC flowrate is greater than 1800 GPM,
THEN ADJUST the SDC TEMP CONTR, 1-HIC-3657 to lower flow to less than 1800 GPM. ____

e. **IF** desired to place 1-FIC-306 in AUTO,
THEN PERFORM the following:

(1) **ADJUST** the setpoint on 1-FIC-306 to match SDC flow. ____

(2) **PLACE** 1-FIC-306 in AUTO. ____

NOTE
LPSI flow alarms may be adjusted as necessary to prevent nuisance alarms.

f. **ADJUST** the setpoints for the LPSI flow alarms on the Refueling Level Cart using ATTACHMENT 4, REFUELING LEVEL CART INSTRUCTIONS:

- 0CRT4136
  - 1FT306 High Flow Alarm Limit.....1900 GPM ____
  - 1FT306 Low Flow Alarm Limit.....1700 GPM ____
- 0CRT4137
  - 1FT306 High Flow Alarm Limit.....1900 GPM ____
  - 1FT306 Low Flow Alarm Limit.....1700 GPM ____

NOTE
Per Generic Letter 88-17 ordinary plastic tubing (tygon tube) does **NOT** meet the concept of reliable instumentation for use in Reduced Inventory.

2. **IF** tygon tube is used as the local refueling level indicator,
THEN WALK DOWN the entire tube to ensure the tubing is free of kinks, no loop seals, trapped air **OR** debris in the tube. **[B0072]** ____

6.4.G REDUCED INVENTORY OPERATIONS[B0073] (Continued) **INITIALS**

NOTE

- Use the lowest reading RCS level indicator as actual RCS level during draining.
- Operating experience has shown that due to Shutdown Cooling suction flow on that hot leg, 4136 indication will bounce when RCS level is at the top of the hot leg.
- SDC flow rates greater than 2000 GPM may cause the indication provided by 1LE4138 to become erratic or non existent due to increased amount of water turbulence in the hot leg.

3. **CHECK** at least 2 independent RCS level indications are available, **AND** ALL RCS level indications that will be used, agree within 0.5 feet. ____
   - MLMS on the Refueling Level Cart, 4136 ____
   - MLMS on the Refueling Level Cart, 4137 ____
   - RCS level indicator on the Refueling Level Cart, 1LE4138 (when less than 39 foot) ____
   - RCS level indicator on the Refueling Level Cart, 1LE4139 ____
   - Local refueling level indicator, 1-LG-4139 ____

   a. **IF** the indications do **NOT** agree, **THEN INITIATE** a CR to resolve the discrepancy before continuing. ____

CAUTION

- Except for emergencies, permission is required from the M-NO or the GS-SO to drain the RCS below the 37.5 foot elevation. Minimize LPSI Pumps shifts while the RCS is below the 37.5 foot elevation. Minimum level to drain the RCS is 36.83 foot elevation.
- While the RCS level is less than the 41 Foot elevation, purification should only be in service for draining the RCS unless 1-CVC-500-CV is gagged in the WPS position.

4. **SUSPEND ALL** evolutions that may cause an RCS or SDC perturbation. ____

6.4.G REDUCED INVENTORY OPERATIONS[B0073] (Continued) **INITIALS**

NOTE
Cameras may be used to monitor the local level indication in the Control Room.

5. **IF** local monitoring of the local refueling level indicator, 1-LG-4139 will be used,
THEN PERFORM the following:

   a. **STATION** a Containment Refueling Level Watch with communication available with the Control Room, with the following duties:
   (N/A if camera is used) ____

      - Continuously **MONITOR** the local Refueling Level indicator **AND REPORT** the level to the Control Room every 15 minutes

      - Immediately **NOTIFY** the Control Room of sudden **OR** unexpected changes in RCS level

   b. **RECORD** level indications that are being monitored locally at intervals no greater than 15 minutes on ATTACHMENT 5, RCS LEVEL LOG. ____

6. **REFER** to TABLE 4, INVENTORY BALANCE - RCS AND SOURCE VOLUMES to periodically **PERFORM** an inventory balance between the RCS and source volumes prior to and while draining the RCS. ____

6.4.G REDUCED INVENTORY OPERATIONS[B0073] (Continued) **INITIALS**

> **NOTE**
> RCS level alarms may be adjusted as necessary to prevent nuisance alarms. **REFER** to Section 5.0 AD.

7. **WHEN** RCS draining is complete,
   THEN ADJUST the setpoints for RCS level alarms on the Refueling Level Cart using ATTACHMENT 4, REFUELING LEVEL CART INSTRUCTIONS: **[B0072]**

   - 0CRT4136
     - 4136 High Level Alarm Limit...0.2 FEET **ABOVE** RCS level ____
     - 4136 Low Level Alarm Limit....0.2 FEET **BELOW** RCS level ____
     - 1LE4138 High Level Alarm Limit...0.2 FEET **ABOVE** RCS level ____
     - 1LE4138 Low Level Alarm Limit....0.2 FEET **BELOW** RCS level ____
     - 1LE4139 High Level Alarm Limit...0.2 FEET **ABOVE** RCS level ____
     - 1LE4139 Low Level Alarm Limit....0.2 FEET **BELOW** RCS level ____
     - 1LT4140 High Level Alarm Limit...0.2 FEET **ABOVE** RCS level ____
     - 1LT4140 Low Level Alarm Limit....0.2 FEET **BELOW** RCS level ____
   - 0CRT4137
     - 4137 High Level Alarm Limit...0.2 FEET **ABOVE** RCS level ____
     - 4137 Low Level Alarm Limit....0.2 FEET **BELOW** RCS level ____
     - 1LE4138 High Level Alarm Limit...0.2 FEET **ABOVE** RCS level ____
     - 1LE4138 Low Level Alarm Limit....0.2 FEET **BELOW** RCS level ____
     - 1LE4139 High Level Alarm Limit...0.2 FEET **ABOVE** RCS level ____
     - 1LE4139 Low Level Alarm Limit....0.2 FEET **BELOW** RCS level ____
     - 1LT4140 High Level Alarm Limit...0.2 FEET **ABOVE** RCS level ____
     - 1LT4140 Low Level Alarm Limit....0.2 FEET **BELOW** RCS level ____

6.4.G REDUCED INVENTORY OPERATIONS[B0073] (Continued) **INITIALS**

8. **IF** the Containment Refueling Level Watch was stationed, **AND** RCS level has been stable at its target level for at least 30 minutes, **THEN DISCONTINUE** the Containment Refueling Level Watch. ____

> **NOTE**
> Do **NOT** use the RCS temperature as flange temperature.

H. **IF** the reactor head is tensioned, **THEN MONITOR** actual reactor vessel flange temperature once per shift. ____

I. **IF** needed, **THEN RAISE** RCS level while in reduced inventory **PER** OI-3B, SHUTDOWN COOLING, **WITH** the following additional requirement:

1. **REFER** to TABLE 4, INVENTORY BALANCE - RCS AND SOURCE VOLUMES to periodically **PERFORM** an inventory balance between the RCS and source volumes prior to and while filling the RCS. ____

2. **IF** ALL the following:

   - RCS level has been raised through the 37.6 foot elevation, ____
   - 1LE4138 will **NOT** be used as one of the required RCS level indications, ____
   - It is desired to raise SDC flow, ____

   THEN PERFORM the following:

   a. **ADJUST** SDC Flow Controller, 1-FIC-306, to obtain a SDC flowrate between 3200-3400 GPM. ____

> **CAUTION**
> To prevent damage to the motor operators, LPSI Header valves should **NOT** be jogged more than 5 times in 2 minutes, allowing at least 5 minutes for the motor and overload relay to cool before operating the MOV again. To allow the MOV motor to coast to a stop before reversing direction, there should be a wait of approximately 5 seconds before reversing direction of the MOV valve operator. **[B0038]**

   b. **THROTTLE** the four (4) LPSI HDR valves in PULL TO OVERRIDE to obtain between 800 and 850 GPM in each LPSI Loop. ____

6.4.I.2 REDUCED INVENTORY OPERATIONS[B0073] (Continued) **INITIALS**

c. **ADJUST** SDC Flow Controller, 1-FIC-306, to obtain a SDC flowrate of approximately 3000 GPM. ____

NOTE
LPSI flow alarms may be adjusted as necessary to prevent nuisance alarms.

d. **ADJUST** the setpoints for the LPSI flow alarms on the Refueling Level Cart using ATTACHMENT 4, REFUELING LEVEL CART INSTRUCTIONS:

- 0CRT4136
  - 1FT306 High Flow Alarm Limit.....3100 GPM ____
  - 1FT306 Low Flow Alarm Limit.....2900 GPM ____
- 0CRT4137
  - 1FT306 High Flow Alarm Limit.....3100 GPM ____
  - 1FT306 Low Flow Alarm Limit.....2900 GPM ____

****** END ******

6.5 EXITING REDUCED INVENTORY OPERATIONS

INITIALS

A. **ENSURE** the the following NO-1-103, CONDUCT OF LOWER MODE OPERATIONS, requirements are in place:

- **VERIFY** the availibility of equipment for the required MEE list of NO-1-200, CONTROL OF SHIFT ACTIVITIES.

  - **IF** the manway is removed,
    THEN VERIFY the equipment **PER** attachment for a unit with PZR manway removed **OR** an approved NO-1-103 Contingency Plan is in effect. ____

  OR

  - **IF** the manway is **NOT** removed,
    THEN VERIFY the equipment **PER** attachment for a unit in Mode 5 or 6 with NO S/G available and manway installed **OR** an approved NO-1-103 Contingency Plan is in effect. ____

- **CONTINUE** logging the MEE in the Shift Turnover sheet ____

- **CONTINUE** checking MEE availability once per 12 hours ____

B. **REFER** to TABLE 4, INVENTORY BALANCE - RCS AND SOURCE VOLUMES to periodically **PERFORM** an inventory balance between the RCS and source volumes prior to and while filling the RCS. ____

6.5 EXITING REDUCED INVENTORY OPERATIONS (Continued) **INITIALS**

NOTE

- 1LT4140 may be used when **NOT** in Reduced Inventory.
- SDC flow rates greater than 2000 GPM may cause the indication provided by 1LE4138 to become erratic or non existent due to increased amount of water turbulence in the hot leg.
- The RCS is no longer considered in a reduced inventory condition when:
  - Fuel is removed from the vessel

  OR
  - RCS level is greater than 41 foot elevation

C. **RAISE** RCS level greater than 41 foot elevation **PER** OI-3B, SHUTDOWN COOLING, **WITH** the following additional requirements: ____

1. **WHEN** RCS level reaches the 41 foot elevation, **THEN PERFORM** the following:

CAUTION

To prevent damage to the motor operators, LPSI Header valves should **NOT** be jogged more than 5 times in 2 minutes, allowing at least 5 minutes for the motor and overload relay to cool before operating the MOV again. To allow the MOV motor to coast to a stop before reversing direction, there should be a wait of approximately 5 seconds before reversing direction of the MOV valve operator. **[B0038]**

a. Slowly **OPEN ALL** available LPSI HDR valves **AND ENSURE** that 1-FIC-306 maintains SDC flow less than 3500 GPM. ____

b. **ADJUST** SDC Flow Controller, 1-FIC-306, to obtain a SDC flowrate of approximately 3000 GPM. ____

c. **TAKE ALL** available LPSI HDR valves out of PULL TO OVERRIDE. ____

D. **WHEN** the RCS is no longer in reduced inventory, **THEN SUSPEND** the limits on evolutions that would cause RCS **OR** SDC perturbations. ____

E. **IF** CET temperature indication is available on PAMS, **THEN ADJUST** the temperature alarm setpoint, HICET_SETPT, **PER** OI-1I, Post Accident Monitoring System Instrumentation, to 700° F. ____

F. **NOTIFY** Radiation Safety Supervision the RCS is no longer in a reduced inventory condition. ____

6.5 EXITING REDUCED INVENTORY OPERATIONS (Continued) **INITIALS**

G. **IF** SDC Purification is desired,
THEN PLACE Purification on SDC **PER** OI-2D, PURIFICATION SYSTEM OPERATION. ____

H. **REQUEST** Plant Chemistry obtain an RCS boron sample. **[B0605]** ____

****** END ******

6.6 RCS FILLING OPERATIONS WITH LEVEL GREATER THAN 41 FT ELEVATION

INITIALS

NOTE

- **NOTIFY** Radiation Safety Supervision before commencing any RCS filling operations.
- There may be conditions where the use of procedures other then the ones listed may be appropriate.
- If Core Components are going to be moved, it is preferred to have RFP level as high as is allowed, to maximize shielding.

WARNING

To reduce airborne radiation, the preferred method for filling dry RFP cavities is gravity fill from the RWT **PER** OI-24G, FILLING REFUELING POOL. This method eliminates the waterfall effect of overflowing the Reactor Vessel flange. **[B1118]**

A. **FILL** the RCS/RFP using the appropriate method:

- **USING** a charging pump for making up to the RCS/RFP. ____
- **USING** Section 6.12, PREPARE RCS FOR DRAWING PRESSURIZER BUBBLE for filling the RCS to draw a bubble in the PZR. ____
- **USING** OI-24G, SPENT FUEL POOL COOLING SYSTEM, to fill the North and South RFP cavities or changing RFP level. ____
- **USING** OI-3B, SHUTDOWN COOLING, for changing RCS/RFP level ____

B. **REQUEST** Plant Chemistry obtain an RCS boron sample. **[B0605]** ____

****** END ******

6.7 MODE 6 PREPARATIONS

INITIALS

NOTE

- This section may be performed more than once during a refueling outage. A working copy of this section shall be made before each subsequent use.
- Steps in this section may be performed concurrently or in any order.
- Mode 6 will be declared just prior to detensioning of the last 18 Reactor Vessel studs less than 75% of design pre-load **OR** returning the first fuel element to the Reactor Vessel. **[B0247]**

A. **VERIFY** all filled portions of the RCS and RFP have been sampled and the following boron concentration requirements are met: (Tech Spec 3.9.1) **[B0198]**

- The results are within 100 PPM of each other.
- The results are greater than or equal to the Mode 6 Refueling Boron Concentration requirement **PER** NEOP-301, Operator Surveillance Procedure.

	INITIALS	DATE
Supervisor-Plant Chemistry		

B. **VERIFY** that the CP-204 Mode 6 sampling requirements are in place. (Tech Spec 3.9.1.1)

	INITIALS	DATE
Supervisor-Plant Chemistry		

6.7 MODE 6 PREPARATIONS (Continued) **INITIALS**

C. **PERFORM** an Administrative Verification that the following equipment is OPERABLE **OR** requirements met, as required by theTech Spec and TRM LCOs:

EQUIPMENT	LCO	INITIALS
Boration flow path	TRM 15.1.3	
HPSI or Charging Pump	TRM 15.1.3	
Boric Acid Pump (if required)	TRM 15.1.3	
BAST/RWT (borated water source)	TRM 15.1.3	
Containment Radiation Signal (Cntmt Purge Vlvs)(if required)	TS 3.3.7	
Fire Detection Instruments	TRM 15.3.5	
Chemistry specifications	TRM 15.4.1	
Snubbers	TRM 15.7.2	
Fire Spray/Sprinkler Systems	TRM 15.7.6	
Fire Halon Systems	TRM 15.7.7	
Fire Hose Stations	TRM 15.7.8	
Fire Hydrants	TRM 15.7.9	
1 off-site circuit and 1 D/G	TS 3.8.2 TS 3.8.3	
One 4KV bus, 480V bus and Two 120V busses	TS 3.8.8 TS 3.8.10	
Two 125V DC busses and Two 125V DC battery banks	TS 3.8.5 TS 3.8.6	
Nuclear Instrumentation	TS 3.9.2	
SDC - High Water Level	TS 3.9.4	
SDC loop in operation with at least 1500 GPM	TS SR 3.9.4.1	
SDC - Low Water Level	TS 3.9.5	

6.7 MODE 6 PREPARATIONS (Continued) **INITIALS**

D. **PERFORM** STP O-90-1, BREAKER LINEUP VERIFICATION.

____/_____
Init Date

E. **NOTIFY** the Operations FSTC to ensure STPs O-90-1 is scheduled to be performed on a weekly basis while in Mode 6. (May be carried as a turn-over item until the FSTC is on site.)

____/_____
Init Date

F. **IF** the 1A or 1B DG is OOS,
THEN ENSURE OI-49 Operability Verification has been completed within the last eight (8) hours and is scheduled on the shift turnover sheet. (N/A if 1A and 1B DG's are operable). **[B0105]**

____/_____
Init Date

G. **PERFORM** STP 0-62-1, MONTHLY VALVE POSITION VERIFICATION-UNIT 1, for Mode 6

____/_____
Init Date

H. **ENSURE** STP O-94B-1, RCS/SDC LOOP OPERABILITY VERIFICATION (MODES 4,5 and 6), has been completed within 7 days prior to declaring Mode 6. (Tech Spec SR 3.4.6.3, 3.4.7.3, 3.4.8.2, 3.9.5.3)

	INITIALS	DATE	TIME
COMPLETED			

1. **NOTIFY** the Operations FSTC to ensure that STP O-94B-1 is scheduled to be performed on a weekly basis during Modes 4,5 and 6 operation. (May be carried as a turn-over item until the FSTC is on site.)

____/_____
Init Date

6.7 MODE 6 PREPARATIONS (Continued) **INITIALS**

I. **REVIEW** the Locked Valve Deviation sheets for operability of equipment required for entry to Mode 6.

	INITIALS	DATE
CRS		

J. **REQUEST** the Plant Testing group have the responsible FSTCs certify **AND** initial that the Surveillance Requirements under their responsibility are current to enter Mode 6:

DISCIPLINE	INITIALS	DATE
Operations		
E&C		
Mechanical Maint		
Fire Protection		
MEIU		
Snubbers		

K. **REQUEST** the responsible Engineering Supervisors certify and initial that no project **OR** modifications are currently outstanding which could impact entering Mode 6.

_____ / _____
Init Date

DISCIPLINE	INITIALS	DATE
Primary Systems Engineering Unit		
BOP Systems Engineering Unit		
E&C Systems Engineering Unit		
PWR Reload Analysis		

6.7 MODE 6 PREPARATIONS (Continued) **INITIALS**

L. **REVIEW** the Temporary Alteration Log for operability impact of equipment required in Mode 6 **AND VERIFY** the Mode 6 applicability box is checked on the Temporary Alteration Form. (Ref. MD-1-100)

	INITIALS	DATE
CRS		

M. **REVIEW** all active Component Manipulation Forms to ensure operability of equipment required for Mode 6.

	INITIALS	DATE
CRS		

N. **REVIEW AND EVALUATE ALL** procedure controlled temporary plant configuration changes **PER** MN-1-110, Appendix PC,for operability impact of equipment required in Mode 6.

	INITIALS	DATE
CRS		

O. **VERIFY** the CONTAINMENT PURGE ISOLATION SYSTEM FUNCTIONAL TEST, STP O-60, has been completed within 92 days prior to movement of irradiated fuel assemblies within containment with Containment Purge valves open. (T.S.S.R. 3.3.7.3).

_____ / _____
Init Date

P. **REQUEST** the Work Control Unit Supervisor certify and initial there are no tag outs which render equipment required for Mode 6 operation inoperable.

RESPONSIBILITY	INITIALS	DATE
WCU Supervisor		

6.7 MODE 6 PREPARATIONS (Continued) **INITIALS**

Q. **REQUEST** the SRO, Ops Work Control, with any needed assistance from the Post-Maintenance Test Coordinator, to certify and initial that post-Maintenance testing on completed maintenance orders (status W8, W9, T1, T2 and T3) identified as Mode 6 restraints are complete.

RESPONSIBILITY	INITIALS	DATE
SRO-Ops Work Control		

R. **REQUEST** the Instrument Shop certify and initial that the Containment Area Rad Monitor **AND** Containment Incore Nuclear Instrument Area Rad Monitor detectors 1-RE-5316A, 1-RE-5316B, 1-RE-5316C and 1-RE-5316D, including fuses are installed.

RESPONSIBILITY	INITIALS	DATE
GS-E&C Maintenance		

S. **REQUEST** the responsible maintenance supervisors certify and initial that **ALL** maintenance activities, associated post-maintenance tests and supporting surveillance tests have been completed satisfactorily on components that are required for Mode 6 operation.

	INITIALS	DATE
GS-MECHANICAL MAINTENANCE		
GS-PROJECT MANAGEMENT		
GS-E&C MAINTENANCE		

T. **REQUEST** the PORC Chairman certify and initial that any PORC Open Items that prohibit entry into Mode 6 are appropriately closed.

RESPONSIBILITY	INITIALS	DATE
PORC Chairman		

6.7 MODE 6 PREPARATIONS (Continued) **INITIALS**

U. **REQUEST** the responsible supervisors certify and initial that there are no open CRs, PGMIs **OR** RHOs that are Mode 6 restraints.

RESPONSIBILITY	INITIALS	DATE
Supervisor-Calvert Cliffs Warehouse Unit (RHOs)		
Outage Manager (CRs, PGMIs)		

V. **REVIEW** the Temporary Notes **AND** Operator Aid Logs for operability of equipment required for entry to Mode 6.

	INITIALS	DATE
CRS		

W. **IF** the Unit is in Mode 5,
THEN ENSURE the MEE listed in NO-1-200, CONTROL OF SHIFT ACTIVITIES, for operation in Mode 6 with the Pressurizer manway removed, is available **OR** an approved NO-1-103 Contingency Plan is in effect.

_____/_____
Init Date

- **CONTINUE** logging the MEE in the Shift Turnover sheet
- **CONTINUE** checking MEE availability once per 12 hours

X. **IF** the Unit is defueled,
THEN ENSURE the MEE listed in NO-1-200, CONTROL OF SHIFT ACTIVITIES, for Unit 1 with the Refueling Pool Level greater than 57 feet **OR** an approved NO-1-103 Contingency Plan is in effect.

_____/_____
Init Date

- **CONTINUE** logging the MEE in the Shift Turnover sheet
- **CONTINUE** checking MEE availability once per 12 hours

6.7 MODE 6 PREPARATIONS (Continued) **INITIALS**

Y. **IF** the Unit is defueled,
THEN REVIEW the Action Statements in effect when last in Mode 6 **AND RE-ENTER** any appropriate Action Statement prior to re-entry into Mode 6.

	INITIALS	DATE
CRS		

Z. **IF** Unit is in Mode 5,
THEN COMMENCE taking Mode 5 **AND** Mode 6 logs to ensure Mode 6 surveillances are being met.

____/_____
Init Date

AA. **IF** Unit is Defueled,
THEN COMMENCE taking Defueled **AND** Mode 6 logs to ensure Mode 6 surveillances are being met.

____/_____
Init Date

AB. **ENSURE** the audible source range monitors in the Control Room **AND** Containment are on **AND** audible from the Refueling Machine bridge **AND** in the Control Room. **[B0270]**

____/_____
Init Date

1. **COMMENCE** performing a channel check of the audible source range monitors at least once every 12 hours while in Mode 6. (Tech Spec SR 3.9.2.1)

____/_____
Init Date

6.7 MODE 6 PREPARATIONS (Continued) **INITIALS**

AC. **ENSURE** the following conditions are met:

1. BY visual inspection, each ECCS train containment sump suction inlet is not restricted by debris and the suction inlet trash racks and screens show no evidence of structural distress or abnormal corrosion. (Tech Spec SR 3.5.2.8)

   ____/_____
   Init Date

2. Normal and Emergency Containment Sump:

   - Herculite removed

     ____/_____
     Init Date

   - Free of debris (check inside screen)

     ____/_____
     Init Date

   - Top cover of emergency sump free of debris

     ____/_____
     Init Date

   - Trench clean

     ____/_____
     Init Date

   - Normal sump strainer installed

     ____/_____
     Init Date

3. Containment Cleanliness is maintained **PER** NO-1-103.

   ____/_____
   Init Date

6.7 MODE 6 PREPARATIONS (Continued) **INITIALS**

AD. **DOCUMENT AND APPROVE** any deviations to the requirements for Mode 6 entry below:

MODE 6 REQUIREMENT	DEVIATION	APPROVAL INITIALS SM	GS-SO

AE. **CERTIFY** the following:

- **ALL** Mode 6 requirement deviations documented and approved
- **ALL** sign-offs, other than the equipment table (Step 6.7.B), are **EITHER** signed within 3 days of the mode change **OR** re-verified by telephone and initialed by the Shift Manager.

Shift Manager _____ Date/time_____/_____

****** END ******

6.8 MODE 6 ENTRY

INITIALS

NOTE
Thermal power shall be the total reactor core heat transfer rate to the reactor coolant excluding decay heat.

A. **WHEN** the following conditions exist:

- Maintenance informs the Control Room that the last 18 Reactor Vessel Head studs are about to be detensioned less than 75% of design pre-load **OR** the first fuel bundle is being moved into the reactor vessel ____
- K_{eff} is less than or equal to 0.95 ____
- % Rated Thermal Power is 0% ____
- RFP temperature is less than or equal to 140° F (SR 3.9.1.1). **[B0477]** ____

THEN LOG Mode 6 entry in the CRO Log. ____

****** END ******

6.9 CORE ALTERATIONS PREPARATIONS[B0408]

A. CHECKLIST FOR CORE ALTERATIONS OTHER THAN FUEL MOVES

NOTE
Steps in this section may be performed concurrently and in any order.

1. **IF** performing core alterations **MORE THAN 72 HOURS** since the last core alteration,
   THEN PERFORM the following: **[B0408]**

   a. **ENSURE** STP O-92-1, REFUELING MACHINE AUX HOIST FUNCTIONAL TEST, is completed satisfactorily within 72 hours prior to the initial start of movement of CEA's within the reactor vessel for a refueling operation, consisting of either a fuel offload and onload **OR** a fuel shuffle, to consider the Refueling Machine Aux Hoist operable. (TRM TVR 15.9.3.2)(N/A if not required at this time **OR** if the requirements of TRM TVR 15.9.3.2 have already been satisfied for the current refueling operation.)

	INITIALS	DATE	TIME
START			
COMPLETED			

   IF STP O-92-1 is **NOT** performed at this time,

   THEN PLACE a note on the shift turnover sheet to ensure it is performed prior to CEA movements within the reactor vessel. (N/A if the requirements of TRM TVR 15.9.3.2 have already been satisfied for the current refueling operation.)

   b. **REVIEW** the Temporary Alteration Log for operability impact of equipment required for core alterations. (Ref MD-1-100)

	INITIALS	DATE
SM		

   c. **REVIEW AND EVALUATE ALL** procedure controlled temporary plant configuration changes **PER** MN-1-110, Appendix PC, for operability impact of equipment required for core alterations.

	INITIALS	DATE
SM		

6.9.A.1 CHECKLIST FOR CORE ALTERATIONS OTHER THAN FUEL MOVES (Continued)

d. **REQUEST** the SRO, Ops Work Control, with any needed assistance from the Post-Maintenance Test Coordinator, to certify and initial that post-Maintenance testing on completed maintenance orders (status W8, W9, T1, T2, and T3) and in any working status (W1, W2, and W3) identified as core alterations restraints are complete or will **NOT** impact core alterations.

RESPONSIBILITY	INITIALS	DATE
SRO-Ops Work Control		

e. **REQUEST** the Work Control Unit Supervisor certify and initial there are no tag outs which affect equipment required for core alterations.

RESPONSIBILITY	INITIALS	DATE
WCU Supervisor		

f. **REQUEST** the Plant Testing group have the responsible FSTCs certify **AND** initial that the Surveillance Requirements under their responsibility are current to allow core alterations **AND** are established on the the schedule to remain current:

DISCIPLINE	INITIALS	DATE
Operations		
E&C		
Mechanical Maint		
Fire Protection		
MEIU		
Snubbers		

6.9.A.1 CHECKLIST FOR CORE ALTERATIONS OTHER THAN FUEL MOVES (Continued)

g. **REQUEST** the responsible Engineering Supervisors to certify and initial that no project **OR** modifications are currently outstanding which could impact core alterations.

DISCIPLINE	INITIALS	DATE
Primary Systems Engineering Unit		
BOP Systems Engineering Unit		
E&C Systems Engineering Unit		

h. **REQUEST** the responsible maintenance supervisors certify and initial that **ALL** maintenance activities, associated post-maintenance tests and supporting surveillance tests have been completed satisfactorily on components that are required for performing core alterations.

RESPONSIBILITY	INITIALS	DATE
GS-MECHANICAL MAINTENANCE		
GS-PROJECT MANAGEMENT		
GS-E&C MAINTENANCE		

i. **REQUEST** the PORC Chairman certify and initial that any PORC Open Items that prohibit core alterations are appropriately closed.

RESPONSIBILITY	INITIALS	DATE
PORC Chairman		

j. **REQUEST** the responsible supervisors certify and initial that there are no open CRs, PGMIs **OR** RHOs that restrain core alterations.

RESPONSIBILITY	INITIALS	DATE
Supervisor-Calvert Cliffs Warehouse Unit (RHOs)		
Outage Manager (CRs, PGMIs)		

6.9.A CHECKLIST FOR CORE ALTERATIONS OTHER THAN FUEL MOVES (Continued)

NOTE
Steps in this section may be performed concurrently and in any order.

2. **IF** performing core alterations **MORE THAN 24 HOURS** since the last core alteration,
THEN PERFORM the following: **[B0408]**

   a. **VERIFY** the RCS (SDC), RFP, and SFP boron concentrations are greater than the Refueling Boron Concentration **PER** NEOP-13 within 24 hours of core alterations.

	INITIALS	DATE	TIME
COMPLETED			

NOTE
Steps in this section may be performed concurrently and in any order.

3. **IF** performing core alterations **MORE THAN ONE HOUR** since the last core alteration,
THEN PERFORM the following: **[B0408]**

NOTE
Communications shall be established for all core alterations.

   a. **ESTABLISH** direct communication between the Control Room and personnel at the refueling station within 1 hour prior to core alterations.

	INITIALS	DATE	TIME
COMPLETED			

   b. **ADD** note to the Shift Turnover Sheet under non-routine surveillance requirements, to verify communications at a frequency not to exceed **once every 12 hours** during core alterations.

	INITIALS	DATE	TIME
COMPLETED			

6.9.A.3 CHECKLIST FOR CORE ALTERATIONS OTHER THAN FUEL MOVES (Continued)

c. **IF** uncoupling/coupling the CEAs **OR** moving the UGS,
THEN VERIFY RFP level is greater than 56.7 foot elevation.

	INITIALS	DATE
COMPLETED		

WARNING

Dose rates associated with the UGS will rise sharply as level is reduced below the 62 foot elevation. Recommended minimum RFP level with the UGS removed is the 64 foot elevation. **[B1147]**

d. **IF** performing core CEA swaps,
THEN VERIFY RFP level is greater than the 57 foot elevation.

	INITIALS	DATE
COMPLETED		

- The RFP level alarm band is set to plus or minus 0.2 ft.

e. **ENSURE** at least one Containment Iodine Filter is available for service. **[B0014]**

	INITIALS	DATE
COMPLETED		

f. The RCS temperature is greater than 70° F and less than or equal to 140° F. (SR 3.9.1.1)**[B0477]**

	INITIALS	DATE
COMPLETED		

6.9.A.3 CHECKLIST FOR CORE ALTERATIONS OTHER THAN FUEL MOVES (Continued)

g. SDC loop in operation circulating reactor coolant at a flow rate of ≥1500 gpm **OR** meeting the requirements of L.C.O. 3.9.4 note 2. (SR 3.9.4.1, 3.9.5.2)

	INITIALS	DATE
COMPLETED		

4. Check list for core alterations other than fuel moves is complete with all issues that will affect core alterations resolved. **[B0408]**

	SIGNATURE	DATE
SM		

****** END ******

6.9 CORE ALTERATIONS PREPARATIONS[B0408] (Continued)

B. CORE ALTERATION CHECKLIST FOR FUEL MOVEMENT

1. **IF** onloading an empty core,
   THEN verify the Core Support Plate cleanliness is acceptable for fuel onload. (N/A if **NOT** onloading an empty core.)

	SE INITIALS	DATE
COMPLETED		

NOTE
Steps in this section may be performed concurrently and in any order.

2. **IF** performing core alterations **MORE THAN 72 HOURS** since the last core alteration,
   THEN PERFORM the following: **[B0408]**

   a. **ENSURE** STP O-59-1, REFUELING MACHINE HOIST FUNCTIONAL TEST, is completed satisfactorily within 72 hours prior to the initial start of movement of fuel assemblies within the reactor vessel for a refueling operation consisting of either a fuel offload and onload **OR** a fuel shuffle, to consider the Refueling Machine Main Hoist operable. (TRM TVR 15.9.3.1) (N/A if not required at this time **OR** if the requirements of TRM TVR 15.9.3.1 have already been satisfied for the current refueling operation.)

	INITIALS	DATE	TIME
START			
COMPLETED			

   b. **ENSURE** STP O-60-1, CONTAINMENT PURGE ISOLATION SYSTEM FUNCTIONAL TEST, is completed prior to movement of irradiated fuel within Containment. (Tech Spec SR 3.9.3.2)

	INITIALS	DATE
COMPLETED		

N/A step if already performed within the last 92 days **OR** the action requirements of Tech Specs 3.3.7.B and 3.9.3 are met.

6.9.B.2 CORE ALTERATION CHECKLIST FOR FUEL MOVEMENT (Continued)

c. **ENSURE** STP O-55A-1, CONTAINMENT CLOSURE VERIFICATION, is complete **PER** the requirements of NO-1-114, CONTAINMENT CLOSURE. (Tech Spec SR 3.9.3.1) **[B0089]**

	INITIALS	DATE
START		
COMPLETED		

d. **NOTIFY** the Operations FSTC to ensure that STP O-55A-1 is scheduled to be performed on a weekly basis during movement of irradiated fuel assemblies within containment. (May be carried as a turn-over item until the FSTC is on site.)

	INITIALS	DATE
COMPLETED		

e. **ENSURE** the Containment Closure tags are controlled by STP-O-55A-1 and NO-1-114, CONTAINMENT CLOSURE during movement of irradiated fuel assemblies within containment. **[B0089]**

	INITIALS	DATE
COMPLETED		

f. **REVIEW** the Temporary Alteration Log for operability impact of equipment required for core alterations. (Ref MD-1-100)

	INITIALS	DATE
SM		

g. **REVIEW AND EVALUATE ALL** procedure controlled temporary plant configuration changes **PER** MN-1-110, Appendix PC, for operability impact of equipment required for core alterations.

	INITIALS	DATE
SM		

6.9.B.2 CORE ALTERATION CHECKLIST FOR FUEL MOVEMENT (Continued)

h. **REQUEST** the SRO, Ops Work Control, with any needed assistance from the Post-Maintenance Test Coordinator, to certify and initial that post-Maintenance testing on completed maintenance orders (status W8, W9, T1, T2, and T3) and in any working status (W1, W2, and W3) identified as core alterations restraints are complete or will **NOT** impact core alterations.

RESPONSIBILITY	INITIALS	DATE
SRO-Ops Work Control		

i. **REQUEST** the Work Control Unit Supervisor certify and initial there are no tag outs which affect equipment required for core alterations.

RESPONSIBILITY	INITIALS	DATE
WCU Supervisor		

j. **ENSURE** access to the Fuel Transfer Tube access hatch walkway (45' Cntmt) has been restricted. **[B1243]**
(N/A if coupling CEAs after fuel movement)

	INITIALS	DATE
Rad-Con Ops		

k. **REQUEST** the Plant Testing group have the responsible FSTCs certify **AND** initial that the Surveillance Requirements under their responsibility are current to allow core alterations **AND** are established on the the schedule to remain current:

DISCIPLINE	INITIALS	DATE
Operations		
E&C		
Mechanical Maint		
Fire Protection		
MEIU		
Snubbers		

6.9.B.2 CORE ALTERATION CHECKLIST FOR FUEL MOVEMENT (Continued)

l. **REQUEST** the responsible Engineering Supervisors to certify and initial that no project **OR** modifications are currently outstanding which could impact core alterations.

DISCIPLINE	INITIALS	DATE
Primary Systems Engineering Unit		
BOP Systems Engineering Unit		
E&C Systems Engineering Unit		

m. **REQUEST** the responsible maintenance supervisors certify and initial that **ALL** maintenance activities, associated post-maintenance tests and supporting surveillance tests have been completed satisfactorily on components that are required for performing core alterations.

	INITIALS	DATE
GS-MECHANICAL MAINTENANCE		
GS-PROJECT MANAGEMENT		
GS-E&C MAINTENANCE		

n. **REQUEST** the PORC Chairman certify and initial that any PORC Open Items that prohibit core alterations are appropriately closed.

RESPONSIBILITY	INITIALS	DATE
PORC Chairman		

o. **REQUEST** the responsible supervisors certify and initial that there are no open CRs, PGMIs **OR** RHOs that restrain core alterations.

RESPONSIBILITY	INITIALS	DATE
Supervisor-Calvert Cliffs Warehouse Unit (RHOs)		
Outage Manager (CRs, PGMIs)		

6.9.B CORE ALTERATION CHECKLIST FOR FUEL MOVEMENT (Continued)

NOTE
Steps in this section may be performed concurrently and in any order.

3. **IF** performing core alterations **MORE THAN 24 HOURS** since the last core alteration,
THEN PERFORM the following: **[B0408]**

   a. Approval for the movement of fuel has been received from the Manager-Nuclear Operations.
   (N/A if coupling CEAs after fuel movement)

	INITIALS	DATE
COMPLETED		

   b. **ENSURE** the Reactor has been subcritical for at least 100 hours (TRM TVR 15.9.1.1) prior to movement of irradiated fuel assemblies in the reactor vessel.
   (N/A if coupling CEAs after fuel movement)

Rx S/D DATE / TIME	INITIALS

	INITIALS	DATE	TIME
COMPLETED			

   c. The RCS (SDC), RFP, and SFP boron concentrations are greater than the Refueling Boron Concentration **PER** NEOP-13.

	INITIALS	DATE
COMPLETED		

6.9.B.3 CORE ALTERATION CHECKLIST FOR FUEL MOVEMENT (Continued)

NOTE
An evaluation to ensure compliance with the FSAR, is required for instances when these radiation monitors are all out of service.

d. **VERIFY** ONE of the following is in service.
(N/A if coupling CEAs after fuel movement)

- Fuel Handling Area Vent Radiation Monitor, 0-RI-5420
- Spent Fuel Handling Machine Radiation Monitor, 0-RI-7025
- SFP Area Rm 320 El-69 Radiation Monitor, 0-RI-7024

	INITIALS	DATE
COMPLETED		

e. **ENSURE** Required Train of CREVS operable **PER** Tech Spec 3.7.8.
(N/A if coupling CEAs after fuel movement)

	INITIALS	DATE
COMPLETED		

f. **ENSURE** Required Train of CRETS operable **PER** Tech Spec 3.7.9.
(N/A if coupling CEAs after fuel movement)

	INITIALS	DATE
COMPLETED		

6.9.B CORE ALTERATION CHECKLIST FOR FUEL MOVEMENT (Continued)

NOTE
Steps in this section may be performed concurrently and in any order.

4. **IF** performing core alterations **MORE THAN ONE HOUR** since the last core alteration,
THEN PERFORM the following: **[B0408]**

   a. **IF** recently irradiated fuel assemblies will be moved in the Auxiliary Building to support core alterations,
   THEN VERIFY SFP Ventilation is in service with charcoal filters in operation **PER** OI-22D, FUEL HANDLING AREA VENTILATION SYSTEM, section titled CHARCOAL FILTER OPERATION, within 12 hours prior to movement of recently irradiated fuel assemblies in the Auxiliary Building and every 12 hours thereafter. (Tech Spec 3.7.11.1)

	INITIALS	DATE	TIME
COMPLETED			

NOTE
Communications shall be established for all core alterations.

   b. **ESTABLISH** direct communication between the Control Room and personnel at the refueling station(s), within 1 hour prior to the start of core alterations (TRM 15.9.2)

	INITIALS	DATE	TIME
COMPLETED			

6.9.B.4 CORE ALTERATION CHECKLIST FOR FUEL MOVEMENT (Continued)

NOTE
Communications shall be verified for all core alterations.

c. **ADD** note to the Shift Turnover Sheet under non-routine surveillance requirements, to verify communications at a frequency not to exceed **once every 12 hours** during core alterations.
(TRM TVR 15.9.2.1)

	INITIALS	DATE	TIME
COMPLETED			

d. **VERIFY** RFP level, per the lowest indication, is greater than the 65 foot elevation (normally 67 feet) within 24 hours prior to movement of irradiated fuel assemblies within Containment and every 24 hours thereafter. (Tech Spec 3.9.6.1) **[B0407]**
(N/A if coupling CEAs after fuel movement)

	INITIALS	DATE	TIME
COMPLETED			

- The RFP level alarm band is set to plus or minus 0.2 ft.

e. **ENSURE** at least one Containment Iodine Filter is available for service. **[B0014]**

	INITIALS	DATE
COMPLETED		

f. **ENSURE** no containment closure deviations exist during movement of irradiated fuel assemblies within Containment.

	INITIALS	DATE
COMPLETED		

6.9.B.4 CORE ALTERATION CHECKLIST FOR FUEL MOVEMENT (Continued)

g. **ENSURE** the operable WRNIs to be used for refueling meet the requirements of the Fuel Handling procedures to be used for core alterations (i.e. Two operable channels should be in the vicinity of the last fuel assemblies removed during a core offload, and the first fuel assemblies inserted during a core onload).

	SE/NFM INITIALS	DATE
COMPLETED		

h. The RCS temperature is greater than 70° F and less than or equal to 140° F. (SR 3.9.1.1) **[B0477]**

	INITIALS	DATE
COMPLETED		

i. **IF** moving fuel assemblies within containment,
THEN SDC loop in operation circulating reactor coolant at a flow rate of ≥1500 gpm **OR** meeting the requirements of L.C.O. 3.9.4 note 1. (SR 3.9.4.1, 3.9.5.2)

	INITIALS	DATE
COMPLETED		

j. **IF** coupling CEA's,
THEN SDC loop in operation circulating reactor coolant at a flow rate of ≥1500 gpm **OR** meeting the requirements of L.C.O. 3.9.4 note 2. (SR 3.9.4.1, 3.9.5.2)

	INITIALS	DATE
COMPLETED		

6.9.B.4 CORE ALTERATION CHECKLIST FOR FUEL MOVEMENT (Continued)

NOTE
An evaluation to ensure compliance with the FSAR, is required for instances where one or more of the radiation monitors are out of service.

k. **VERIFY** the following radiation monitors are in service:

- **IF** Cntmt Purge is in service,
  THEN 69' Elevation Containment Area Radiation Monitors, 1-RI-5316A thru D, are operable with fuses installed **PER** Tech Spec 3.3.7. This includes a check of the CRS Sensor Modules, ESFAS "A" Logic Module, ESFAS "A" Manual Actuation Channel **AND** bypass keys on ESFAS. **[B0630]**

- **IF** Cntmt Purge is secured,
  THEN at least one of the 69' Elevation Containment Area Radiation Monitors, 1-RI-5316A thru D.

	INITIALS	DATE
COMPLETED		

5. Core alteration check list complete with all issues that will affect the refueling operation resolved. **[B0408]**

	SIGNATURE	DATE
SM		

****** END ******

6.9 CORE ALTERATIONS PREPARATIONS[B0408] (Continued)

NOTE
Steps in this section may be performed concurrently and in any order.

C. CORE ALTERATION CHECKLIST FOR CEA COUPLING AFTER FUEL MOVEMENT

NOTE
If CEA coupling is delayed, the appropriate steps for 72 hours, 24 hours and/or 1 hour after core alterations are required to be completed as appropriate.

1. **ENSURE** the appropriate steps in Section 6.9.B., CORE ALTERATION CHECKLIST FOR FUEL MOVEMENT have been completed.

	INITIALS	DATE
COMPLETED		

2. **ENSURE** STP O-92-1, REFUELING MACHINE AUX HOIST FUNCTIONAL TEST, is completed satisfactorily within 72 hours prior to the initial start of movement of CEA's within the reactor vessel for a refueling operation, consisting of either a fuel offload and onload **OR** a fuel shuffle, to consider the Refueling Machine Aux Hoist operable. (TRM TVR 15.9.3.2)
(N/A if the requirements of TRM TVR 15.9.3.2 have already been satisfied for the current refueling operation.)

	INITIALS	DATE	TIME
START			
COMPLETED			

3. **VERIFY** RFP level is greater than 56.7 foot elevation.

	INITIALS	DATE
COMPLETED		

- The RFP level alarm band is set to plus or minus 0.2 ft.

6.9.C CORE ALTERATION CHECKLIST FOR CEA COUPLING AFTER FUEL MOVEMENT (Continued)

4. Core alteration check list complete with all issues that will affect CEA coupling after fuel movement resolved. **[B0408]**

	SIGNATURE	DATE
SM		

****** END ******

6.10 MODE 5 PREPARATIONS — INITIALS

NOTE
Operations can control both Sections of MODE 5 PREPARATIONS if they desire, BUT Outage Management can only control Section A., MODE 5 CHECKLIST (OUTAGE MANAGEMENT)

A. MODE 5 CHECKLIST (OUTAGE MANAGEMENT)

NOTE
Steps in this section may be performed concurrently and in any order.

1. **SAMPLE** the Waste Gas Surge Tank within 24 hours prior to entering Mode 5. (Tech Spec 5.5.12.A, TRM TVR 15.11.1.2)

	INITIALS	DATE	TIME
WGST SAMPLE			

2. **ENSURE** that the chemistry requirements of TRM 15.4.1 are met. ____

3. **DETERMINE** method to monitor Reactor Vessel Flange temperature when RCS level is less than the Reactor Vessel Flange (43.97 foot elevation): ____

   ☐ Pyrometer

   ☐ Reactor Vessel Flange Temperature Monitor

4. **REQUEST** the Plant Testing group have the responsible FSTCs certify and initial that the Surveillance Requirements under their responsibility are current to enter Mode 5 from Mode 6.

DISCIPLINE	INITIALS	DATE	TIME
Operations			
E&C			
Mechanical Maint			
Fire Protection			
MEIU			
Snubbers			

6.10.A MODE 5 CHECKLIST (OUTAGE MANAGEMENT) (Continued) **INITIALS**

5. **REQUEST** the responsible Engineering Supervisors certify and initial that no project **OR** modifications are currently outstanding which could impact entering Mode 5 from Mode 6.

DISCIPLINE	INITIALS	DATE	TIME
Primary Systems Engineering Unit			
BOP Systems Engineering Unit			
E&C Systems Engineering Unit			
PWR Reload Analysis			

6. **REQUEST** the Work Control Unit Supervisor certify and initial there are no tag outs which render equipment required for Mode 5 operation inoperable.

RESPONSIBILITY	INITIALS	DATE	TIME
WCU Supervisor			

7. **REQUEST** the SRO, Ops Work Control, with any needed assistance from the Post-Maintenance Test Coordinator, to certify and initial that post-Maintenance testing on completed maintenance orders (status W8, W9, T1, T2, and T3) identified as Mode 5 restraints are complete.

RESPONSIBILITY	INITIALS	DATE	TIME
SRO-Ops Work Control			

8. All safety related snubbers required for Mode 5 operation are operable. (TRM 15.7.2)

RESPONSIBILITY	INITIALS	DATE	TIME
MECHANICAL MAINTENANCE			

6.10.A MODE 5 CHECKLIST (OUTAGE MANAGEMENT) (Continued) **INITIALS**

9. **REQUEST** the responsible maintenance supervisors certify and initial that **ALL** maintenance activities, associated post-maintenance tests and supporting surveillance tests have been completed satisfactorily on components that are required for Mode 5 operation.

	INITIALS	DATE
GS-MECHANICAL MAINTENANCE		
GS-PROJECT MANAGEMENT		
GS-E&C MAINTENANCE		

10. **REQUEST** the PORC Chairman certify and initial that any PORC Open Items that prohibit entry into Mode 5 are appropriately closed.

RESPONSIBILITY	INITIALS	DATE	TIME
PORC Chairman			

11. **REQUEST** the responsible supervisors certify and initial that there are no open CRs, PGMIs **OR** RHOs that are Mode 5 restraints.

RESPONSIBILITY	INITIALS	DATE	TIME
Supervisor-Calvert Cliffs Warehouse Unit (RHOs)			
Outage Manager (CRs, PGMIs)			

****** END ******

6.10 MODE 5 PREPARATIONS (Continued) **INITIALS**

B. MODE 5 CHECKLIST (OPERATIONS)

NOTE

- Steps in this section may be performed concurrently and in any order.
- GS-SO permission is required to drain the RCS less than 37.5 foot.

1. **ENSURE** RCS level above the bottom of the hot leg (35.58 foot) by the lowest reading level indicator, within one hour of entering Mode 5. (Tech Spec SR 3.1.1.2)

	INITIALS	DATE	TIME
COMPLETED			

2. **ENSURE** STP O-62-1, MONTHLY VALVE POSITION VERIFICATION, for Mode 5 is complete.

	INITIALS	DATE	TIME
COMPLETED			

3. **ENSURE ALL** sources of non-borated water greater than or equal to 88 GPM are tagged out, within one hour of entering Mode 5. (Tech Spec SR 3.1.1.3) ____

4. **ENSURE** at least two coolant loops are operable. (Tech Spec 3.4.7, 3.4.8) ____

5. **ENSURE** the RCS is vented through a path of greater than or equal to eight square inches. (Tech Spec 3.4.12) ____

6. **ENSURE** a channel check on the Wide Range Neutron Monitors has been completed **PER** the control Room Logs with at least two Source Range channels operable. (Tech Spec 3.3.12)

	INITIALS	DATE	TIME
COMPLETED			

6.10.B MODE 5 CHECKLIST (OPERATIONS) (Continued) **INITIALS**

7. **REVIEW** the Temporary Alteration Log for operability impact of equipment required in Mode 5 **AND VERIFY** the Mode 5 applicability box is checked on the Temporary Alteration Form. (Ref. MD-1-100)

	INITIALS	DATE
CRS		

8. **REVIEW AND EVALUATE ALL** procedure controlled temporary plant configuration changes **PER** MN-1-110, Appendix PC, for operability impact of equipment required for Mode 5.

	INITIALS	DATE
CRS		

9. **REVIEW** the Locked Valve Deviation sheets for operability of equipment required for entry to Mode 5.

	INITIALS	DATE
CRS		

10. **REVIEW** the Temporary Notes and Operator Aid Logs for operability of equipment required for entry to Mode 5.

	INITIALS	DATE
CRS		

11. **REVIEW** all active Component Manipulation Forms to ensure operability of equipment required for Mode 5.

	INITIALS	DATE
CRS		

6.10.B MODE 5 CHECKLIST (OPERATIONS) (Continued) **INITIALS**

12. **REVIEW** the LCO and PLCO log for Mode 5 applicability.

	INITIALS	DATE
CRS		

13. **ENSURE** the the following NO-1-103, CONDUCT OF LOWER MODE OPERATIONS, requirements are in place:

    - **VERIFY** the availability of equipment for the required MEE list of NO-1-200, CONTROL OF SHIFT ACTIVITIES. ____

      - **IF** the manway is removed,
        THEN VERIFY the equipment **PER** attachment for a unit with PZR manway removed **OR** an approved NO-1-103 Contingency Plan is in effect.

      OR

      - **IF** the manway is **NOT** removed,
        THEN VERIFY the equipment **PER** attachment for a unit in Mode 5 or 6 with NO S/G available and manway installed **OR** an approved NO-1-103 Contingency Plan is in effect.

    - **CONTINUE** logging the MEE in the Shift Turnover sheet ____

    - **CONTINUE** checking MEE availability once per 12 hours ____

14. **COMMENCE** taking Mode 5 and Mode 6 logs to ensure Mode 5 surveillances are being met. ____

15. **PRIOR** to tensioning the first Reactor Vessel stud, **COMMENCE** checking Reactor Vessel flange temperature greater than or equal to 70° F at least once per shift while in Mode 6, by one of the following methods: **[B0247]** ____

    a. **WHEN** the RCS level is greater than the Reactor Vessel Flange (43.97 foot elevation),
       THEN ENSURE SDC temperature from the RCS (as read on 1-TR-351) is greater than or equal to 95° F.

    b. **WHEN** the RCS level is less than the Reactor Vessel Flange (43.97 foot elevation),
       THEN UTILIZE one of the following methods:

       - **USE** a pyrometer to obtain local flange temperature
       - **OBTAIN** flange temperature from a Reactor Vessel Flange Temperature Monitor

6.10.B MODE 5 CHECKLIST (OPERATIONS) (Continued) **INITIALS**

16. **DOCUMENT AND APPROVE** any deviations to the requirements for Mode 5 entry below:

MODE 5 REQUIREMENT	DEVIATION	APPROVAL INITIALS SM	GS-SO

17. **CERTIFY** the following:

- **ALL** Mode 5 requirement deviations documented and approved
- **ALL** sign-offs, other than the equipment table, are **EITHER** signed within 3 days of the mode change **OR** re-verified by telephone and initialed by the Shift Manager.

Shift Manager _____ Date/time_____/_____

a. **FORWARD** this completed section to the GS-SO for retention **PER** CNG-PR-3.01-1000, Records Management.

****** END ******

6.11 MODE 5 ENTRY

INITIALS

NOTE

The reactor vessel head is considered tensioned when at least 18 equally spaced reactor vessel studs are tensioned to greater than 75% of designed pre-load. Maintenance will request permission to enter Mode 5 prior to tensioning the 18th stud to 75% of designed pre-load. **[B0247]**

A. **WHEN** Maintenance is prepared to tension the 18th equally spaced Reactor Vessel stud to 75% of designed pre-load, **THEN**:

* **LOG** Mode 5 entry in the CRO log. ____

* Within one hour, **ENSURE** requirements of Tech Spec 3.1.1 are met **AND RECORDED** in the CRO Log for the following:

  - Shutdown Margin ____
  - RCS level above the bottom of the hot leg ____
  - Sources of non-borated water are less than or equal to 88 GPM ____

****** END ******

6.12 PREPARE RCS FOR DRAWING PRESSURIZER BUBBLE

INITIALS

A. **IF** the RCS will be Vacuum Filled,
THEN PROCEED to Section 6.16, VACUUM FILL, **AND** N/A Sections 6.12, PREPARE RCS FOR DRAWING PRESSURIZER BUBBLE, 6.13, FILL THE RCS AND GO SOLID, 6.14, DRAW PRESSURIZER BUBBLE, and 6.15, VENT THE RCS. ____

B. **IF** the RCS will **NOT** be Vacuum Filled,
THEN N/A Section 6.16, VACUUM FILL. ____

CAUTION

The MLMS pressure transducers should be isolated before the Pressurizer manway is installed to limit their possible pressure exposure.

C. **IF** the MLMS pressure transducers are installed,
THEN SHUT the following isolation valves to isolate the pressure transducers:

- 1PDT111A HEADER DRAIN, 1-RC-1290 ____
- 1PDT111A HEADER B/U DRAIN, 1-RC-1291 ____
- 1PDT121A HEADER DRAIN, 1-RC-1293 ____
- 1PDT121A HEADER B/U DRAIN, 1-RC-1294 ____
- PZR INSTR HDR VENT SOUTH, 1-RC-1168 ____
- PZR INSTR HDR VENT NORTH, 1-RC-1185 ____

6.12 PREPARE RCS FOR DRAWING PRESSURIZER BUBBLE (Continued) **INITIALS**

NOTE

- This procedure fills and vents the RCS in preparation for drawing a Pressurizer bubble. RCS level changes in support of outage activities are normally performed under direction of other sections of this procedure.
- Steps in this section may be performed concurrently and in any order.
- This section requires operator actions inside Containment to install temporary vent tubing.

D. **ENSURE** the following: **[B0270]**

* Reactor Vessel Head in place and bolted down ____
* Pressurizer manway installed ____
* **ALL** RCS piping and associated components installed **AND** RCS aligned **PER** OI-1A, REACTOR COOLANT SYSTEM AND PUMP OPERATIONS ____
* RCP shaft couplings installed ____
* The RWT contains sufficient volume to fill the RCS ____
* The RWT boron concentration is greater than the RCS Shutdown Boron Concentration limit of NEOP 301 ____
* **IF** available, RVLMS is in service ____

E. **IF** the temporary Pressurizer vent rig is **NOT** installed, **THEN REQUEST** Mechanical Maintenance to perform the following:

1. **INSTALL** the temporary Pressurizer vent rig (flow gauge and vent valve, 1-RC-277) to the Pressurizer vent line downstream of PZR VENT ISOL, 1-RC-215 and PZR VENT STOP, 1-RC-216. ____
2. **INDEPENDENTLY VERIFY** the temporary Pressurizer vent rig installation. ____
3. **INITIATE** MN-1-110 Attachment PC tracking. ____

6.12 PREPARE RCS FOR DRAWING PRESSURIZER BUBBLE (Continued) **INITIALS**

F. **IF** RCS level is greater than 49 ft. elevation, **THEN REQUEST** I&C to fill the reference leg, vent, and place in service, the following Quench Tank **AND** Pressurizer Level Transmitters: 04800

1. Quench Tank Level Transmitter:

   - 1-LT-116 ____

2. Pressurizer Level Transmitters:

   - 1-LT-103 ____
   - 1-LT-110X ____
   - 1-LT-110Y ____

G. **IF** RCS level is less than 49 ft. elevation, **THEN ENSURE** RCS Wide Range Level Monitoring System in service. ____

NOTE

IF Radiation Safety Supervision allows entry into the Refueling Pool, **THEN** the following temporary tubing should be run to the nearest Refueling Pool cavity drain.

H. **INSTALL** temporary tubing at the following locations:

   * Reactor Vessel Vent, routed to the Refueling Pool ____
   * Pressurizer Vent, routed to the Refueling Pool ____
   * Refueling Pool Cavity Drain to the Containment Sump. ____

I. **IF** the RCS was drained below 39 ft. elevation, **THEN INSTALL** temporary tubing at the Regenerative Heat Exchanger Vent, routed to the Containment Normal Sump. ____

6.12 PREPARE RCS FOR DRAWING PRESSURIZER BUBBLE (Continued) **INITIALS**

CAUTION
When Pressurizer level is less than 90 inches, two Charging pumps shall be tagged out with their breakers racked out and discharge valves shut to limit dilution sources to less than 88 GPM.

J. **ENSURE** CVCS Charging **AND** Letdown are available for operation with:

* One Charging pump available to be aligned to the RWT ____
* At least one loop Charging Stop, 1-CVC-518-CV or 1-CVC-519-CV, OPEN. ____
* L/D STOP, 1-CVC-515-CV shut ____
* LD CNTMT ISOL, 1-CVC-516-CV shut ____

K. **PLACE** at least two Core Exit Thermocouples, one each from ZA **AND** ZB and from different core quadrants, on Recorder Trend. ____

L. **PLACE** Typed Trend Blocks 26 **AND** 27 on a five minute trend for the duration of the RCS fill. ____

M. **ENSURE** with Chemistry that the RWT contents used for filling the RCS meet the RCS Chemistry requirements of CP-204. ____

N. **ENSURE OPEN** Component Cooling Containment isolation valves:

- CC CNTMT SUPPLY.....1-CC-3832-CV ____
- CC CNTMT RETURN.....1-CC-3833-CV ____

O. **ENSURE** S/G Nitrogen blankets have been secured **PER** OI-12B, Section titled, SECURING S/G NITROGEN BLANKET. ____

NOTE
- Step O must be completed prior to performing step P.
- Maintaining Quench Tank pressure less than 1.5 PSIG helps prevent PORVs from leaking. **[B0771]**

P. **PREPARE** the Quench Tank for plant startup **PER** OI-1B, QUENCH TANK OPERATIONS, SECTION 6.11, QT LINEUP FOR PLANT STARTUP AT LOW RCS PRESSURE. ____

6.12 PREPARE RCS FOR DRAWING PRESSURIZER BUBBLE (Continued) **INITIALS**

NOTE
Actual S/G level may be determined by comparing remote indicated level to FIGURE 6, **OR** by use of the local sightglass.

Q. **ENSURE ONE** of the following conditions exist:

- **BOTH** S/Gs are between (-)40 and (+)60 inches actual level ____
- An exception for S/G level requirement has been approved by the GS-SO or M-NO

  Exception Approval Verified By:_____
  Shift Manager ____

R. **SECURE** SDC Purification **PER** OI-2D, PURIFICATION SYSTEM OPERATION. ____

CAUTION
Step R must be commenced prior to performing step S. OI-2D will direct when to continue.

S. **UNISOLATE AND PLACE IN SERVICE BOTH** Letdown Control valves and Backpressure Regulating valves as follows:

1. **ENSURE SHUT BOTH** LETDOWN LINE CONTR ISOL valves:

   - L/D STOP.....1-CVC-515-CV ____
   - LD CNTMT ISOL.....1-CVC-516-CV ____

2. **ENSURE OPEN** L/D CV INLET valves:

   - (1-CVC-110P-CV) L/D CV INLET.....1-CVC-105 ____
   - (1-CVC-110Q-CV) L/D CV INLET.....1-CVC-103 ____

3. **ENSURE OPEN** L/D CV OUTLET valves:

   - (1-CVC-110P-CV) L/D CV OUTLET.....1-CVC-106 ____
   - (1-CVC-110Q-CV) L/D CV OUTLET.....1-CVC-104 ____

4. **ENSURE OPEN** BP REG INLET valves:

   - (1-CVC-201P-CV) BP REG INLET.....1-CVC-108 ____
   - (1-CVC-201Q-CV) BP REG INLET.....1-CVC-110 ____

5. **ENSURE OPEN** BP REG OUTLET valves:

   - (1-CVC-201P-CV) BP REG OUTLET.....1-CVC-109 ____
   - (1-CVC-201Q-CV) BP REG OUTLET.....1-CVC-111 ____

6. **PLACE** L/D CONTR VLVS Selector Switch, 1-HS-110-1, in BOTH. ____

6.12.S PREPARE RCS FOR DRAWING PRESSURIZER BUBBLE (Continued) **INITIALS**

7. **PLACE** BACKPRESSURE REG VLVS selector switch, 1-HS-201, in BOTH. ____

8. **PLACE** L/D PRESS controller, 1-PIC-201, in AUTO with a setpoint of 100 PSIG. ____

9. **ADJUST** L/D THROTTLE VLV controller 1-HIC-110 in MANUAL to obtain 100% output, to open Letdown Control valves to their open limit. ____

CAUTION
RCS level will lower slightly during the performance of step T.

T. **PERFORM** the following to **ENSURE OPEN BOTH** MINI FLOW RETURN TO RWT ISOL valves: **[B1250]**

1. **ENSURE OPEN** MINI FLOW RETURN TO RWT ISOL, 1-SI-659-MOV. ____

2. **ENSURE OPEN** MINI FLOW RETURN TO RWT ISOL, 1-SI-660-MOV. ____

3. **VERIFY** at least 42 GPM mini flow indicated on the digital flow meter located in 12 ECCS Pump Room by **SLOWLY THROTTLING OPEN** the running LPSI pump mini flow:

   - 11 LPSI PP MINI FLOW RTN ISOL, 1-SI-449 ____

   OR

   - 12 LPSI PP MINI FLOW RTN ISOL, 1-SI-450 ____

4. **SHUT** the selected LPSI pump mini flow:

   - 11 LPSI PP MINI FLOW RTN ISOL, 1-SI-449 ____

   OR

   - 12 LPSI PP MINI FLOW RTN ISOL, 1-SI-450 ____

6.12 PREPARE RCS FOR DRAWING PRESSURIZER BUBBLE (Continued) **INITIALS**

> **NOTE**
> The Pressurizer Heaters are **NOT** tagged out for solid water operations here because they are needed to draw the Pressurizer bubble.

U. **IMPLEMENT** the following solid water controls: **[B0064]**

1. **ENSURE ALL** Pressurizer Heaters in OFF. ____

2. **TAGOUT** the RCPs by **ONE** of the following methods:

   - **BOTH** feeder breakers 252-1201 and 252-2202 racked out ____
   - **ALL** eight RCP breakers racked out ____

3. **ENSURE BOTH** PORVs operable with **ALL** of the following conditions:

   * STPs M-572A, M-572B and M-672B current ____

   * **BOTH** PORV handswitches in SINGLE MPT ENABLE:

     - PORV 402 MPT PROTECTION....1-HS-1406 ____
     - PORV 404 MPT PROTECTION....1-HS-1408 ____

   * **BOTH** PORV Override Shut/Auto handswitches in AUTO:

     - PORV 402 OVERRIDE....1-HS-1402 ____
     - PORV 404 OVERRIDE....1-HS-1404 ____

4. **ENSURE BOTH** PORV Block Valves are fully open. ____

5. **ENSURE** two Charging pumps have their breakers racked out and tagged:

   - 11 Charging pump.....52-1115 ____
   - 12 Charging pump.....52-1415 ____
   - 13 Charging pump....52-1104 **AND** 52-1404 ____

6.12.U PREPARE RCS FOR DRAWING PRESSURIZER BUBBLE (Continued) **INITIALS**

6. **ISOLATE** HPSI pumps by **ONE** of the following methods:

   a. **RACK OUT AND DANGER TAG ALL** four HPSI pump breakers **PER** OI-27C, 4.16 KV SYSTEM:

      - 11 HPSI pump.....152-1108 ____
      - 12 HPSI pump.....152-1408 ____
      - 13 HPSI pump.....152-1110 ____
      - 13 HPSI pump.....152-1410 ____

   OR

   b. The following valves will be CAUTION Tagged shut **AND** their breakers open (where applicable)

      (1) **LOCK SHUT AND TAG ALL** three HPSI pump manual discharge valves:

         - 11 HPSI PP DISCH ISOL...1-SI-428 ____
         - 12 HPSI PP DISCH ISOL...1-SI-415 ____
         - 13 HPSI PP DISCH ISOL...1-SI-406 ____

      OR

      (2) **ALL** eight MAIN and AUX HPSI Loop Isolation valves:

HPSI MAIN HDR	HPSI AUX HDR
1-SI-616-MOV	1-SI-617-MOV
1-SI-626-MOV	1-SI-627-MOV
1-SI-636-MOV	1-SI-637-MOV
1-SI-646-MOV	1-SI-647-MOV

____

      OR

      (3) **BOTH** MAIN and AUX HPSI Header Isolation valves:

HPSI MAIN HDR ISOL	HPSI AUX HDR ISOL
1-SI-654-MOV	1-SI-656-MOV

____

V. **TERMINATE** operational testing of Safety Injection and CVCS components until normal water level is established in the Pressurizer. **[B0064]** ____

6.12 PREPARE RCS FOR DRAWING PRESSURIZER BUBBLE (Continued) **INITIALS**

W. **CHECK** the following actions complete PRIOR to continuing:

* The temporary Pressurizer vent rig is installed ____

* **IF** RCS level is greater than 49 ft. elevation, **THEN** I&C has completed placing the Quench Tank **AND** Pressurizer Level Transmitters in service ____ 04800

* Section in OI-2D, PURIFICATION SYSTEM OPERATION for securing SDC Purification is complete. ____

****** END ******

6.13 FILL THE RCS AND GO SOLID

INITIALS

NOTE

- This section requires operator actions inside Containment to:
  - Vent the Reactor Vessel
  - Vent the Pressurizer
  - Isolate Reactor Vessel level instrumentation (if needed)
  - Fill the SITs (if needed)
- Advanced determination of the drain path to be used when drawing a bubble minimizes the TIME the RCS is in a solid water condition.

A. **DETERMINE** the drain path to be used when drawing the Pressurizer bubble, as follows: (check one) ____

☐ **IF BOTH** of the following conditions exist, **THEN DRAIN** to the RWT (preferred path):

- At least 10 inches RWT capacity exists ____
- RCS boron concentration is such that final RWT boron concentration will be between 2450 PPM and 2700 PPM, as determined by APPENDIX 4, CALCULATION OF FINAL RWT CONCENTRATION FOR RCS DRAIN. ____

☐ **IF** the RWT is **NOT** available, **THEN DRAIN** to RCW (alternate path).

NOTE

Locked valves, controlled under NO-1-205.

B. **ENSURE OPEN** 11 RWT OUT on the selected LPSI pump that will be used to fill the RCS:

- (11 LPSI pump) 11 RWT OUT, 1-SI-4142-MOV ____
- (12 LPSI pump) 11 RWT OUT, 1-SI-4143-MOV ____

CAUTION

Portable radio usage in Containment shall be in accordance with NO-1-113.

C. **DISPATCH** an operator into Containment, with communications available with the Control Room, in preparation for Reactor Vessel and Pressurizer venting operations. ____

6.13 FILL THE RCS AND GO SOLID (Continued) **INITIALS**

D. **IF** RCS level is less than 49 ft. elevation,
THEN DISPATCH I&C into Containment to place the Quench Tank Level Transmitter in service,
AND to **PREPARE** to place the Pressurizer Level Transmitters in service,
WHEN Pressurizer Level reaches 50 inches (53 ft. elevation): 04800

1. Quench Tank Level Transmitter:

   - 1-LT-116 ____

2. Pressurizer Level Transmitters:

   - 1-LT-103 ____
   - 1-LT-110X ____
   - 1-LT-110Y ____

E. **NOTIFY** Radiation Safety Supervision of the following:

- Drawing a bubble in the Pressurizer. ____
- Drain path to be used. ____
- Pending venting operations. ____

WARNING
Opening RCS vents could raise airborne contamination levels. **ALL** vented fluids shall be treated as radioactive unless certified clean by Chemistry.

F. **VERIFY OPEN** the following Pressurizer Vent valves:

- PZR VENT ISOL.....1-RC-215 ____
- PZR VENT STOP.....1-RC-216 ____
- PZR VENT THROT.....1-RC-277 ____

6.13 FILL THE RCS AND GO SOLID (Continued) **INITIALS**

NOTE

- Locked valves, controlled under NO-1-205.
- The top of the Pressurizer and a full RWT are at approximately the same elevation. The LPSI fill rate should be expected to change as RCS level rises. Pressurizzer vent capacity may also affect LPSI fill rate.
- Pressurizer level shall be monitored using one set of the following level indicators: (L110X! and L110Y! will indicate .0000 U when level is greater than 360 inches)
  - 1-LI-103 and Computer point L110X!

  OR
  - 1-LI-103 and Computer point L110Y!
- RCS cooldown rate shall be monitored using the CETs on the Trend Recorder. SDC to RCS temperature on 1-TR-351 is lower than RCS temperature due to the relatively cold RWT water used to fill the RCS.

CAUTION

- Do **NOT** exceed the following RCS cooldown rates:

RCS Temperature	Maximum Cooldown Rate
Greater than 256° F	100° F per hour
256° F to 106° F	40° F per hour
Less than 106° F	35° F per hour

- To prevent cooling the Reactor Vessel below 70° F and S/Gs below 85° F, CET temperatures must be maintained above 95° F.

G. While monitoring RCS temperature, initiate RCS fill by **THROTTLING OPEN** the selected LPSI pump normal suction valve:

- 11 LPSI PP NORMAL SUCT ISOL, 1-SI-444 ____
- 12 LPSI PP NORMAL SUCT ISOL, 1-SI-432 ____

H. **ADJUST** SDC TEMP CONTR, 1-HIC-3657, as necessary to maintain RCS temperature between 95° F and 150° F. ____

CAUTION

If the PORVs open due to overpressure, they will remain open. The cause of the overpressure condition should be determined and corrected before shutting the PORVs.

I. **START BOTH** Pressurizer House Ventilation Fans.

- 11 PZR VENT FAN.....1-HS-6543 (27' SWGR RM) ____
- 12 PZR VENT FAN.....1-HS-6544 (45' E PEN RM) ____

6.13 FILL THE RCS AND GO SOLID (Continued) **INITIALS**

J. **START** the selected Charging Pump **PER** OI-2A, Section titled RUNNING A CHARGING PUMP IN MODE 5 OR 6, aligned to the RWT. ____

K. **IF** this RCS fill was started with level below 49 ft. elevation, **THEN VERIFY** I&C has completed placing the Quench Tank Level Transmitter in service ____ 04800

L. **IF** this RCS fill was started with level below 49 ft. elevation, **THEN** when Pressurizer level reaches 50 inches (53 ft. elevation) **REQUEST** I&C fill the reference leg, vent, and place in service, the following Pressurizer Level Transmitters **BEFORE** Pressurizer level reaches 150 inches (61.4 ft. elevation): 04800

- 1-LT-103 ____
- 1-LT-110X ____
- 1-LT-110Y ____

CAUTION

Pressurizer Level Transmitters are required in service prior to exceeding 61.4 ft. elevation (150 inches).

M. **IF** necessary, **THEN CONTROL** RCS fill rate to assure Pressurizer level transmitters are in service prior to exceeding 150 inches (61.4 ft. elevation). ____

6.13 FILL THE RCS AND GO SOLID (Continued) **INITIALS**

CAUTION
PORVs which open due to overpressure, will remain open. The cause of the overpressure condition should be determined and corrected before shutting the PORVs.

NOTE
The dedicated operator is not required to be stationed when maintaining PZR level constant at <300" in the PZR.

N. Prior to exceeding 170 inches in the pressurizer, **STATION** a dedicated licensed operator as the solid water overpressurization watch with the following duties: **[B0593]**

* **MONITOR** the following:

- RCS pressure ____
- Pressurizer level ____
- Pressurizer heaters ____
- Letdown flow ____
- Charging pump operation ____

* **TAKE** necessary corrective actions to prevent overpressurization of the RCS. ____

6.13 FILL THE RCS AND GO SOLID (Continued) **INITIALS**

O. **WHEN** Pressurizer level reaches 150 inches,
THEN PERFORM the following while continuing to fill the RCS:

1. **OPEN BOTH** LETDOWN LINE CONTR ISOL valves:

   - L/D STOP.....1-CVC-515-CV ____
   - LD CNTMT ISOL.....1-CVC-516-CV ____

2. **MAKE** the following log entries in the Transient Tracking Log:

   - Initiation of Pressurizer/RCS heatup ____
   - Letdown initiation ____

3. **COMMENCE** recording Pressurizer Heatup data in APPENDIX 2, PRESSURIZER HEATUP LOG. ____

4. **PLACE** PZR PRESS CONTR 1-PIC-100X and 1-PIC-100Y in AUTO with a setpoint of 2250 PSIA. ____

CAUTION

- Do **NOT** exceed the following RCS heatup rates:

RCS Temperature	Maximum Heatup Rate
70° F to 246° F	80° F per hour
Greater than 246° F	100° F per hour

- Do **NOT** exceed a Pressurizer linear heatup rate of 100° F per hour.
- Do **NOT** exceed a Pressurizer temperature of 180° F prior to being filled solid.

5. **ENERGIZE** Pressurizer Backup and Proportional Heaters in AUTO as necessary to maintain Pressurizer Heatup rate less than 100° F per hour **AND** non-solid temperature less than 180° F. ____

6.13.O FILL THE RCS AND GO SOLID (Continued) **INITIALS**

CAUTION
To prevent draining the RCS through the instrument loop, the RCS Wide Range Level Monitoring System shall be isolated before Pressurizer level reaches 229 inches (68 ft. elevation).

6. **SECURE** the RCS Wide Range Level Monitoring System **AND** Refueling Level Panel as follows:

   a. **SHUT** REFUEL LVL IND ISOL, 1-RC-105 ____

   b. **SHUT** REFUEL LVL IND STOP, 1-RC-106 ____

   c. **SHUT** ROOT ISOL FOR LE-4139 & LG-4139, 1-RC-1427. ____

   d. **SHUT** B/U ISOL FOR LE-4139 & LG-4139, 1-RC-1428. ____

   e. Verify the pipe cap is removed **AND OPEN** HDR VENT ISOL LG-4139 & LE-4139, 1-RC-1432. **[B0132]** ____

   f. **SHUT** ISOL FOR 1-LT-4140, 1-RC-1236. ____

   g. **IF** RCS level in the sightglass is greater than the 63 ft elevation,
   THEN DRAIN the sightglass using LT-4140 DRAIN, 1-RC-1237 to a desired level below the 63 ft elevation to ensure thermal expansion of water in sightglass does not overflow the vent. ____

   h. **ENSURE SHUT** LT-4140 DRAIN, 1-RC-1237. ____

   i. **SHUT** ISOL FOR 1-LT-4140, 1-RC-1235. ____

NOTE
This step may be performed concurrently with the remainder of this section.

   j. **DE-ENERGIZE** the RCS Level Monitoring Systems by placing 1CS4138 **AND** 1CS4139 in OFF. (located in the Cable Spreading Room on the east wall, just inside the door) ____

NOTE
This step may be performed concurrently with the remainder of this section.

   k. **REQUEST** IM Shop to remove the Refueling Level Cart. ____

6.13.O FILL THE RCS AND GO SOLID (Continued) **INITIALS**

7. **IF** the local Reactor Vessel level indicator tygon tube is in service, **THEN REMOVE** it from service as follows:

   a. **SHUT** LOCAL REFUEL LVL ISOL, 1-RC-1238. ____

   b. **CONTACT** IM to remove **AND** stow the tygon tube. ____

NOTE
If a pressure reduction is required and the Reactor vessel has been vented, the Reactor vessel head should be vented again. **[B0720]**

P. **WHEN** Pressurizer level reaches 241 inches (69 ft. elevation), **THEN VENT** the Reactor Vessel as follows:

1. **ENSURE** the tubing cap installed on the tee fitting downstream of RX VSL VENT STOP, 1-RC-275. ____

2. **OPEN** the Reactor Vessel Vent valves (located at 69 ft. elevation on the edge of the Refueling Pool, on the Reactor Vessel side of 1-PDT-124):

   - RX VSL VENT THROT.....1-RC-276 ____
   - RX VSL VENT ISOL.....1-RC-274 ____
   - RX VSL VENT STOP.....1-RC-275 ____

3. **WHEN** a steady stream of air-free water issues from the vent line, **THEN SHUT** the Reactor Vessel Vent valves.

   - RX VSL VENT ISOL.....1-RC-274 ____
   - RX VSL VENT STOP.....1-RC-275 ____

4. **IF** the RCS was **NOT** drained below 39 ft. elevation during the outage,
   THEN REMOVE AND STOW the temporary tubing while continuing with this procedure. ____

6.13 FILL THE RCS AND GO SOLID (Continued) **INITIALS**

NOTE
Locked valves, controlled under NO-1-205.

CAUTION
The LPSI PP normal suction valves must be shut before the RCS approaches solid to prevent overpressurizing the suction piping.

Q. **WHEN** desired to secure the fill via the LPSI normal suction valve,
OR Pressurizer level reaches 350 inches,
THEN LOCK SHUT the LPSI PP normal suction valve used to fill the RCS:

- 11 LPSI PP NORMAL SUCT ISOL, 1-SI-444 ____
- 12 LPSI PP NORMAL SUCT ISOL, 1-SI-432 ____

NOTE
The RCS is now being filled to a solid water condition. To minimize the time the RCS is in a solid water condition, it is desirable to continue heatup of the Pressurizer and draw a bubble once the RCS is filled.

R. **WHEN** a steady stream of air-free water issues from the Pressurizer vents,
THEN SHUT the Pressurizer Vent valves:

- PZR VENT ISOL.....1-RC-215 ____
- PZR VENT STOP.....1-RC-216 ____
- PZR VENT THROT.....1-RC-277 (temporary valve) ____

S. **ENSURE** RCS pressure maintained approximately 100 PSIG by L/D PRESS controller, 1-PIC-201. ____

CAUTION
To prolong RCP seal life, CBO flow should be aligned to the VCT as soon as RCS pressure is greater than VCT pressure.

T. **WHEN** RCS pressure is greater than VCT pressure,
THEN OPEN the RCP CBO Isolation valves:

- RCP BLEED CNTMT ISOL.....1-CVC-505-CV ____
- RCP BLEED CNTMT ISOL.....1-CVC-506-CV ____

6.13 FILL THE RCS AND GO SOLID (Continued) **INITIALS**

U. **WHEN** VCT level is greater than 88 inches, **THEN SHIFT** the Charging Pump suction to the VCT:

1. **OPEN** VCT OUT, 1-CVC-501-MOV ____

2. **SHUT** RWT CHG PP SUCT, 1-CVC-504-MOV ____

V. **REQUEST** Mechanical Maintenance perform the following while continuing with this procedure.

1. **REMOVE** the temporary Pressurizer vent rig (flow gauge and vent valve, 1-RC-277) to the Pressurizer vent line downstream of PZR VENT ISOL, 1-RC-215 and PZR VENT STOP, 1-RC-216. ____

2. **INSTALL** the blank flange on the Pressurizer vent line downstream of PZR VENT ISOL, 1-RC-215 and PZR VENT STOP, 1-RC-216. ____

3. **INDEPENDENTLY VERIFY** the temporary Pressurizer vent rig is removed **AND** the vent line flanged off. ____

4. **CLOSE OUT** the MN-1-110 Attachment PC form. ____

****** END ******

6.14 DRAW PRESSURIZER BUBBLE

INITIALS

NOTE

- Pressurizer level shall be monitored using one set of the following level indicators: (L110X! and L110Y! will indicate .0000 U when level is greater than 360 inches)
  - 1-LI-103 and Computer point L110X!

  OR
  - 1-LI-103 and Computer point L110Y!
- After an outage where RCS level was lowered below the top of the Hot Leg (which drains the S/G tubes) the Pressurizer bubble will form during Pressurizer heatup instead of when draining the RCS. Thermal expansion displaces water from the Pressurizer into the S/G tubes, limiting the pressure rise, resulting in the Pressurizer reaching a saturated condition.

A. **IF** this is the initial fill after an outage where the S/G tubes were drained,
THEN MONITOR for spontaneous Pressurizer bubble formation, while Pressurizer temperature is raised, as indicated by the following parameters: ____

- Pressurizer level decreasing with steady or increasing pressure ____
- Pressurizer temperature corresponds to saturation temperature for Pressurizer pressure ____

B. **ENERGIZE** Backup and Proportional Heaters in AUTO as necessary to maintain Pressurizer Heatup rate less than 100° F per hour **AND COMMENCE** heat up to establish Pressurizer pressure between 100 PSIA and 195 PSIA. ____

- **RECORD** Pressurizer heatup data in APPENDIX 2, PRESSURIZER HEATUP LOG. ____

C. **WHEN** Pressurizer temperature reaches 300° F (approximately 70 PSIA saturation),
THEN STOP the running Charging Pump **AND PLACE** in PULL TO LOCK. ____

NOTE

The VCT is made a closed system with CBO initiated and Charging secured. Overpressurization of the VCT is possible in this configuration.

D. **COMMENCE** monitoring VCT level and pressure.

- **IF** required to lower VCT pressure,
  THEN VENT the VCT **PER** OI-2A, CHEMICAL AND VOLUME CONTROL SYSTEM. ____
- **IF** required to lower VCT level,
  THEN DRAIN the VCT to RCW by cycling VCT DRN, 1-CVC-161. ____

6.14 DRAW PRESSURIZER BUBBLE (Continued) **INITIALS**

E. **REQUEST** Plant Chemistry obtain an RCS boron sample. **[B0605]** ____

CAUTION
During the formation of the Pressurizer bubble, a large quantity of relatively hot water will enter the RCS from the Pressurizer when the RCS is drained. This may require adjusting SDC temperature to maintain RCS temperature less than 200° F.

F. **COMMENCE** continuous monitoring of Pressurizer pressure and level (1-LI-103 and Computer point L110X! **OR** 1-LI-103 and Computer point L110Y!), **AND** RCS temperature. (L110X! and L110Y! will indicate .0000 U when level is greater than 360 inches) ____

CAUTION
Excessive drain rates may exceed Pressurizer Heater capacity to maintain Pressurizer pressure.

G. **COMMENCE** draining the RCS, using the pre-determined flowpath, as follows:

1. **MAINTAIN** Pressurizer pressure:

   - Greater than 70 PSIA ____
   - Less than 195 PSIA ____

2. **IF** draining to the RWT via the LPSI pump Miniflow, **THEN**:

   a. **NOTIFY** Radiation Safety Supervision that the RCS will be drained to the RWT. ____

NOTE
Locked valves, controlled under NO-1-205.

   b. **OPEN** the running LPSI pump Miniflow Isolation:

   - 11 LPSI PP MINI FLOW RTN ISOL.....1-SI-449 ____
   - 12 LPSI PP MINI FLOW RTN ISOL.....1-SI-450 ____

6.14.G.2 DRAW PRESSURIZER BUBBLE (Continued) **INITIALS**

NOTE
Locked valves, controlled under NO-1-205.

c. **IF** desired to raise the drain rate,
THEN OPEN ONE of the following valves:

- 12 SDC HX TO HPSI SUCT.....1-SI-662-MOV ____
- 11 SDC HX TO HPSI SUCT.....1-SI-663-MOV ____

d. **MONITOR** RWT level change. ____

3. **IF** draining to the RWT via SI LKG TO RWT ISOL, 1-SI-459,
THEN:

a. **NOTIFY** Radiation Safety Supervision that the RCS will be drained to the RWT. ____

NOTE
Locked valves, controlled under NO-1-205.

b. **OPEN** SDC HX OUT RTN TO RWT ISOL, 1-SI-460. ____

NOTE
Locked valves, controlled under NO-1-205.

c. **THROTTLE OPEN** SI LKG TO RWT ISOL, 1-SI-459. ____

d. **MONITOR** RWT level change. ____

4. **IF** draining to RCW,
THEN:

a. **DIVERT** Letdown flow to RCW by placing 1-HS-2500 for 1-CVC-500-CV in WPS. ____

b. **PLACE** L/D PRESS controller, 1-PIC-201, in MANUAL. ____

c. **ADJUST** 1-PIC-201 in MANUAL to obtain 100% output, to fully open **BOTH** Backpressure Regulating valves. ____

d. **RESET** Diversion Flow Integrator, 1-FQI-2540 **OR MONITOR** RC Waste Receiver Tank level change. ____

H. **ADJUST** SDC TEMP CONTR, 1-HIC-3657, as necessary to maintain RCS temperature below 200° F. ____

6.14 DRAW PRESSURIZER BUBBLE (Continued) **INITIALS**

NOTE
Pressurizer level instruments read to 360 inches. Pressurizer volume for draining from solid at 404 inches to 350 inches, when the level instruments are on scale, is approximately 1620 gallons. This equates to approximately 1.9 inch RWT level change and 0.75 feet RC Waste Receiver Tank level change.

I. **IF** any of the following occur **AND** pressurizer level indicates no change:

- 30 minutes of draining ____
- RWT level rises by 1.9 inch ____
- in service RC Waste Receiver Tank rises by 0.75 feet. ____
- CVCS Flow Diversion Integrator, 1-FQI-2540, indicates 1620 gallons have been drained from the Pressurizer ____

THEN PERFORM the following:

1. **SECURE** the drain by shutting the valves opened to initiate the drain:

   - 11 LPSI PP MINI FLOW RTN ISOL, 1-SI-449 ____
   - 12 LPSI PP MINI FLOW RTN ISOL, 1-SI-450 ____
   - 12 SDC HX TO HPSI SUCT, 1-SI-662-MOV ____
   - 11 SDC HX TO HPSI SUCT, 1-SI-663-MOV ____
   - SI LKG TO RWT ISOL, 1-SI-459 ____
   - SDC HX OUT RTN TO RWT ISOL, 1-SI-460 ____

2. **PLACE** L/D PRESS controller, 1-PIC-201, in AUTO with a setpoint of 150 PSIG. ____

3. **UTILIZE** Pressurizer Heaters to maintain Pressurizer pressure between 50 and 150 PSIA. ____

4. **INVESTIGATE** the cause of no change in level, including, **BUT NOT** limited to: ____

   - Instrumentation malfunction: compare indicated level to RVLMS to determine need to refill the RCS
   - Valve misalignment in drain path

5. **WHEN** corrective actions are complete **AND** it is desired to continue with drawing the bubble,
   THEN RE-INITIATE draining **PER** this section. ____

   - **IF** re-initiating drain to RCW,
     THEN LOG Letdown initiation in the Transient Tracking Log. ____

6.14 DRAW PRESSURIZER BUBBLE (Continued) **INITIALS**

J. **CHECK** Pressurizer bubble established by the following parameters: ____

- Pressurizer level lowering with steady or rising pressure
- Pressurizer temperature corresponds to saturation temperature for Pressurizer pressure

K. **WHEN** the formation of the bubble has been verified, **THEN CONTINUE** draining to lower Pressurizer level to 144 inches (1-LI-103 and Computer point L110X!, **OR** 1-LI-103 and Computer point L110Y!). ____

> **NOTE**
> Step L is required to be performed only one time after the RCS has been vented to atmosphere.

04800

> **CAUTION**
> RCP CBO RV, 1-CVC-199-RV setpoint is approxomately 140 PSIG (154.7 PSIA).

04800

L. **IF** Unit 1 RCS has been vented to atmosphere, **THEN PERFORM** the following to lubricate the vapor seal: 04800

1. **ENSURE** Pressurizer pressure is between 100 and approximately 120 PSIA. ____
2. **SHUT** RCP BLEED CONTMT ISOL, 1-CVC-505-CV **OR** 1-CVC-506-CV. ____
3. **WHEN** 10 minutes has elapsed, **THEN OPEN** RCP BLEED CONTMT ISOL, 1-CVC-505-CV **OR** 1-CVC-506-CV. ____

M. **CYCLE** Pressurizer Heaters to maintain Pressurizer pressure between 100 PSIA and 195 PSIA **AND** Pressurizer temperature at least 30° F above the highest RCS loop temperature. ____

6.14 DRAW PRESSURIZER BUBBLE (Continued) **INITIALS**

N. **STABILIZE** Pressurizer level at 144 inches (1-LI-103 and Computer point L110X!, **OR** 1-LI-103 and Computer point L110Y!) as follows:

> **NOTE**
> Locked valves, controlled under NO-1-205.

1. **IF** draining to the RWT via the LPSI pump Miniflow, **THEN SHUT** the running LPSI pump Miniflow Isolation:
   - 11 LPSI PP MINI FLOW RTN ISOL.....1-SI-449 ____
   - 12 LPSI PP MINI FLOW RTN ISOL.....1-SI-450 ____
   - **IF** the following valves were opened, **THEN SHUT**:
     - 12 SDC HX TO HPSI SUCT....1-SI-662-MOV ____
     - 11 SDC HX TO HPSI SUCT....1-SI-663-MOV ____

> **NOTE**
> Locked valves, controlled under NO-1-205.

2. **IF** draining to the RWT via SI LKG TO RWT ISOL, 1-SI-459, **THEN SHUT**:
   - SI LKG TO RWT ISOL, 1-SI-459 ____
   - SDC HX OUT RTN TO RWT ISOL, 1-SI-460 ____
3. **IF** draining to RCW, **THEN DIRECT** Letdown flow to the VCT by placing 1-HS-2500 for 1-CVC-500-CV in AUTO. ____
4. **ENSURE** the B/U CHG PP SEL switch, 1-HS-224, is selected to a position that does **NOT** have the available CHG PP listed. ____
5. **START** the available CHG PP. ____
6. **ENSURE** L/D PRESS controller, 1-PIC-201, in MANUAL. ____
7. **ADJUST** 1-PIC-201 output to balance Charging and Letdown to maintain Pressurizer level at 144 inches. ____
8. **LOG** initiation of Charging and Letdown in the Transient Tracking Log. ____

O. **OBSERVE** the indication on the selected PZR LVL CONTR CH, 1-LIC-110X **OR** 1-LIC-110Y, that corresponds with a reading of 144 inches on 1-LI-103, **OR** Computer points L110X! **OR** L110Y!. ____

6.14 DRAW PRESSURIZER BUBBLE (Continued) **INITIALS**

P. **ADJUST** the local setpoint on the selected PZR LVL CONTR CH, 1-LIC-110X **OR** 1-LIC-110Y, to match the level observed above, **AND PLACE** it in AUTO. ____

Q. **PLACE** L/D THROTTLE VLV controller, 1-HIC-110, in AUTO. ____

R. **ADJUST** 1-PIC-201 to maintain approximately 100 PSIG backpressure **AND** a Pressurizer level of 144 inches. ____

1. **IF** desired,
   THEN PLACE 1-PIC-201 in AUTO. ____

S. **COMMENCE** monitoring VCT level during heatup **AND DIVERT** Letdown to RCW to maintain level as necessary. ____

T. **IF** the Pressurizer was drained to the RWT,
THEN PERFORM the following:

1. **IF** the RCS boron concentration was **NOT** within 10 PPM of the RWT boron concentration,
   THEN INITIATE recirculation of the RWT using the SFP Cooling pump, **PER** OI-24E, RECIRCULATION OF REFUELING WATER TANKS. **[B0029]** ____

2. **IF** the RCS boron concentration **WAS** within 10 PPM of the RWT boron concentration,
   THEN INITIATE recirculation of the RWT using the RWT Recirc pump **OR** the SFP Cooling pump, **PER** OI-24E, RECIRCULATION OF REFUELING WATER TANKS. ____

NOTE

A 2 volume recirc of a full RWT will take 9 hours using a SFP pump **OR** 24 hours using the RWT Recirc pump.

3. **NOTIFY** Chemistry that a 2 volume recirc of the RWT has been started **AND** to obtain and analyze an RWT sample for boron concentration when the 2 volume recirc is complete. ____

U. **IF** necessary to raise S/G temperatures,
THEN CONSIDER using 2 LPSI pump operation on SDC. ____

V. **PRESSURIZE** the Quench Tank for plant Normal Operation **PER** OI-1B, QUENCH TANK OPERATIONS, SECTION 6.1, ADDING DI **OR** N_2 TO THE QT. ____

****** END ******

6.15 VENT THE RCS

INITIALS

NOTE
IF the RCS was drained to less than 39 ft. elevation,
THEN operator actions are required inside Containment to support venting the Regenerative Heat Exchanger and performing RCPs venting.

A. **ENSURE** RCPs are available for operation. ____

B. **IF** the RCS was drained below the bottom of the Pressurizer (48 foot elevation) or any other activity was performed that may have introduced air into the Reactor Vessel Head,
THEN REQUEST chemistry to sample the RCS for suspended solids. ____

C. **VERIFY** the primary temperature is greater than 100° F using TR-351 and S/G secondary temperature is greater than 85° F using a hand pyrometer or with other calibrated temperature instruments, with a maximum tolerance of (±) 5° F. ____

D. **IF** the RCS was drained below 39 ft. during the outage,
THEN PERFORM S/G tube sweeps as follows:

1. **ENSURE** Pressurizer level is less than 170 inches. **[B0064]** ____
2. **ENERGIZE** Pressurizer Heaters to raise Pressurizer pressure to between 220 PSIA and 250 PSIA. ____
3. **RECORD** Pressurizer heatup data in APPENDIX 2, PRESSURIZER HEATUP LOG.

NOTE

- If SDC is secured, RCS temperature shall be determined using RCS T_{AVG} (the average of RCS T_{HOT} and T_{COLD}) from the loop with the largest delta T
  - (11 loop) 1-TI-112H, 1-TI-112C
  - (12 loop) 1-TI-122H, 1-TI-122C
- If SDC is in operation, RCS temperature shall be determined using the SDC Temperature Recorder, 1-TR-351, **OR** computer points as follows:
  - If **NO** LPSI flow rate changes have been made in the previous 30 minutes, using the average SDC Temperature (the average of FROM RCS(red pen) and TO RCS(blue pen) **OR** computer points T351X and T351Y

6.15.D VENT THE RCS (Continued) **INITIALS**

NOTE

- **IF** SDC is in operation, **AND** RCS temperature can **NOT** be obtained by averaging, **THEN** RCS temperature shall be determined using the SDC Temperature Recorder, 1-TR-351, **OR** computer points as follows:
  - S/G 30° F above RCS temperature: RCS temperature shall be determined using TO RCS(blue pen) **OR** computer point T351X
  - S/G below RCS temperature: RCS temperature shall be determined using FROM RCS(red pen) **OR** computer point T351Y
- Steam Generator temperature is obtained locally using a hand-held surface instrument on the Steam Generator shell between the Steam Generator Tube Sheet and water level covering the tubes

4. Steam Generator temperature limits are as follows:
   - S/G temperature is no greater than 30° F above RCS temperature **[B0064]** ____
   - **IF** RCS temperature is 146° F or less, **THEN** S/G temperature is no more than 50° F below RCS temperature **[B0410]** ____
   - **IF** RCS temperature is greater than 146° F, **THEN** S/G temperature is no more than 60° F below RCS temperature **[B0410]** ____
5. **CLEAR** the solid water tagouts. ____
6. **VERIFY** power aligned to the U-1 RCP breakers **PER** OI-27B, Section titled: OPERATION OF RCP BUS FEEDER BREAKERS. ____ 04800
7. **NOTIFY** M/CEU to prepare to monitor RCP vibration while bumping RCPs when sweeping S/Gs. **[B0368]** ____

NOTE

All 4 RCPs must be run to ensure proper sweeping of the S/G tubes.

8. **PERFORM** RCP seal venting **PER** OI-1E, REACTOR COOLANT PUMP SEAL VENTING PROCEDURE, to sweep air from the S/G tubes. ____
9. **REMOVE AND STOW** the temporary tubing from the Reactor Vessel Head vents while continuing with this procedure. ____

E. **ESTABLISH** Pressurizer pressure between 220 PSIA and 230 PSIA. ____

6.15 VENT THE RCS (Continued) **INITIALS**

F. **IF** S/G tube sweeps are **NOT** performed,
THEN CLEAR the solid water tagout on the RCPs. ____

NOTE
Steps G, H, I and J may be performed concurrently or in any order.

G. **IF** RCS was drained below 39 ft. during the outage,
THEN VENT the Regenerative Heat Exchanger as follows:

1. **NOTIFY** Radiation Safety Supervision of pending venting operation. ____
2. **SHUT** REGEN HX SHELL VENT THROTTLE, 1-CVC-398. ____
3. **UNLOCK AND OPEN** REGEN HX SHELL VENT, 1-CVC-102. ____
4. **UNLOCK AND OPEN** REGEN HX SHELL VENT B/U, 1-CVC-192. ____
5. **THROTTLE OPEN** 1-CVC-398. ____
6. **WHEN** air-free water is observed in 1-FG-229A,
THEN LOCK SHUT:
   - 1-CVC-102 ____
   - 1-CVC-192 ____
7. **FULLY OPEN** 1-CVC-398. ____
8. **REMOVE AND STOW** the temporary tubing. ____

H. **VENT** the Hot Leg Sample line as follows:

1. **REQUEST** Chemistry to ensure the Primary Sample Sink aligned for sampling. ____
2. **WHEN** the sample sink is aligned,
THEN OPEN RCS SAMPLE ISOL, 1-PS-5464-CV. ____
3. **OPEN** RCS HOT LEG SAMPLE, 1-PS-5467-CV, for approximately two minutes. (1C90) ____
4. **SHUT** 1-PS-5467-CV. ____
5. **SHUT** 1-PS-5464-CV. ____

I. **CLEAR** the solid water tagout on the HPSI system. ____

6.15 VENT THE RCS (Continued) **INITIALS**

J. **ALIGN** Charging and RCMU pumps as follows:

1. **IF** tagged shut for draining of the RCS during the outage, **THEN UNTAG AND OPEN** Charging pump discharge valves:

   - 11 CHG PP DISCH.....1-CVC-166 ____
   - 12 CHG PP DISCH.....1-CVC-172 ____
   - 13 CHG PP DISCH ISOL.....1-CVC-178 ____

2. **IF** tagged shut for draining of the RCS during the outage, **THEN UNTAG AND OPEN** RCMU pump discharge valves:

   - 11 RCMU PP DISCH.....1-CVC-245 ____
   - 12 RCMU PP DISCH.....1-CVC-248 ____

3. **UNTAG AND RACK IN** Charging pump breakers, **PER** OI-27D, STATION POWER 480 VOLT SYSTEM:

   - 11 Charging pump.....52-1115 ____
   - 12 Charging pump.....52-1415 ____
   - 13 Charging pump...52-1104 **AND** 52-1404 ____

4. **IF** tagged open for draining of the RCS during the outage, **THEN UNTAG AND CLOSE** RCMU pump breakers:

   - 11 RCMU pump.....52-10505 ____
   - 12 RCMU pump.....52-11505 ____

5. **PLACE** CHG PPs and RCMU PPs in AUTO/NORMAL. ____

K. **IF** the plant is to remain in Mode 5, **THEN PERFORM** the following:

1. **IF** S/G tube sweeps were performed, **THEN VERIFY** the RCP LTOP tagout is still hanging while continuing with this section. **[B0064]** ____

CAUTION
While in Mode 5, RCS pressure should be maintained at the lower end of the allowable range to minimize the chance of small pressure transients causing a loss of SDC unless otherwise specified for surveillance testing.

2. **LOWER AND MAINTAIN** Pressurizer pressure between 100 PSIA and 200 PSIA by **ONE** of the following methods:

   - **PER** OI-1H, PRESSURIZER PRESSURE CONTROL, Section on LOW PRESSURE PRESSURIZER CONTROL (preferred method) ____
   - Cycling Pressurizer Heaters ____

6.16 VACUUM FILL [B1143]

INITIALS

A. PREPARE TO DRAW VACUUM

NOTE
Steps in this section may be performed concurrently and in any order.

1. **ENSURE** the following: **[B0270]**

   - Reactor Vessel Head in place and bolted down. ____
   - Pressurizer Manway Vacuum Fill Cover installed. ____
   - **ALL** RCS piping and associated components installed **AND** RCS aligned **PER** OI-1A, REACTOR COOLANT SYSTEM AND PUMP OPERATIONS.
     (N/A if individual component deviations have been evaluated with Shift Manager approval) ____
   - High velocity flush of HPSI and LPSI piping has been completed **PER** OI-3A, SAFETY INJECTION AND CONTAINMENT SPRAY. ____
   - Tagouts affecting vacuum boundaries have been evaluated. ____
   - The RWT boron concentration is greater than the RCS Shutdown Boron Concentration limit of NEOP 301. ____
   - **ENSURE** with Chemistry that the RWT contents used for filling the RCS meet the RCS Chemistry requirements of CP-204. ____
   - The RWT contains sufficient volume to fill the RCS (approximately 44,300 gallons). ____
   - **IF** available, Reactor Vessel level indication is in service. ____

6.16.A PREPARE TO DRAW VACUUM (Continued) **INITIALS**

NOTE
Refer to FIGURE 7, RCS VACUUM FILL EQUIPMENT.

2. **VERIFY** RCS Vacuum Fill Equipment installed.

   - Vacuum Pump skid in containment on 69 ft. elevation and energized. ____
   - Rotation check performed. ____
   - Exhaust HEPA filter installed. ____
   - Vacuum manifold installed with REACTOR COOLANT SYSTEM VACUUM gauge, 0-RVF-16-PI, visible to the Vacuum Pump operator. ____
   - Hose connected from vacuum manifold to RX VSL VENT STOP, 1-RC-275. ____
   - Hose available from vacuum manifold to HDR VENT ISOL LG-4139 & LE-4139, 1-RC-1432, **AND NOT** connected. ____
   - EMERGENCY VACUUM BREAKER ISOLATION valve, 0-RVF-6, is OPEN. ____

NOTE
The 4-inch hose connected between the Pressurizer Manway Vacuum Fill Cover and the fall-away plate flange opening is credited to establish the ≥8 in^2 vent for LTOP.

   - 4-inch hose connected from Pressurizer Manway Vacuum Fill Cover to fall-away plate flange and vacuum manifold. ____
     - Fall-away plate flange opening has no obstructions. ____

3. **ENSURE** RCP Seals have been prepared for Vacuum Fill **PER** TA-23, INSTALLATION AND REMOVAL OF RCS VACUUM FILL EQUIPMENT. ____

   - O-ring seals at the RCP couplings are installed.
   - FME caps on the vapor seal leakoff lines are installed.

6.16.A PREPARE TO DRAW VACUUM (Continued) **INITIALS**

4. **ENSURE** SW header temperature low enough to maintain RCS temperature less than 110° F with 1750 GPM SDC flow rate.

   a. **IF** the Reactor Core has been Refueled,
   AND the Reactor has been shutdown greater than or equal to 16 days,
   THEN ENSURE SW header temperature is less than or equal to 85° F. ____

   b. **IF** the Reactor Core has **NOT** been Refueled,
   AND the Reactor has been shutdown greater than or equal to 8 days,
   THEN ENSURE SW header temperature is less than or equal to 53° F. ____

   c. **IF** the Reactor Core has **NOT** been Refueled,
   AND the Reactor has been shutdown greater than or equal to 4 days and less than 8 days,
   THEN ENSURE SW header temperature is less than or equal to 37° F. ____

   d. **IF** the conditions of Steps 4.a through 4.c are **NOT** met,
   THEN Engineering has evaluated SW header temperature low enough to maintain RCS temperature less than 110° F with 1750 GPM SDC flow rate.

	INITIALS	DATE
Mechanical and Civil Engineering Unit, OR FIN Response		

6.16.A PREPARE TO DRAW VACUUM (Continued) **INITIALS**

NOTE
The Pressurizer Level Transmitter variable legs drain when the RCS level is below the Pressurizer. Operating Experience has shown that filling the reference legs and the sections of the variable legs that do not drain, is adequate for vacuum fill.

5. **VERIFY** with IM the following: 04800

   a. Quench Tank Level Transmitter reference leg filled, **AND** transmitter placed in service:

      - 1-LT-116

   b. Pressurizer Level Transmitters reference legs filled, water added to the variable legs, and transmitters placed in service:

      - 1-LT-103
      - 1-LT-110X
      - 1-LT-110Y

	INITIALS	DATE
Supervisor - Instrument Maintenance		

6.16.A PREPARE TO DRAW VACUUM (Continued) **INITIALS**

NOTE

- RCS level less than 38.9 ft. elevation ensures adequate air flow area in the top of the hot leg.
- RCS level has been selected to maintain the cold legs full, minimize evacuation volume, and provide margin to maximum level to accommodate small void formations.
- The accuracy of the RCS level indicator on the Refueling Level Cart, 1LE4139 is **NOT** adequate to establish RCS level for vacuum fill.

6. **ENSURE** RCS level is established to draw vacuum:

   a. **MEASURE** RCS level with **ALL** of the following RCS level indicators that are available:

      - MLMS on the Refueling Level Cart, 4136 ____
      - MLMS on the Refueling Level Cart, 4137 ____
      - RCS level indicator on the Refueling Level Cart, 1LE4138 ____
      - Local refueling level indicator, 1-LG-4139 ____

      (1) **ENSURE** RCS level is 38.6(+0.2,-0.0) ft. elevation, using the lowest RCS level indicator. ____

      (2) **ENSURE** all RCS level indicators indicate less than 39.08 ft. elevation. ____

NOTE

If SDC is lost, vacuum will be broken. Therefore Time To Boil calculations will continue to be calculated at atmospheric pressure.

CAUTION

RCS temperature should be as low as possible in the range to extend the Time To Boil, low temperature boiling/condensation diluted pocket concerns, and minimize cooldown during RCS fill.

7. **VERIFY** RCS temperature is between 95° F and 110° F using TR-351. ____

6.16.A PREPARE TO DRAW VACUUM (Continued) **INITIALS**

NOTE

- At least two level indications are required during Vacuum Fill. The local Reactor Vessel level indicator tygon tube can **NOT** be used under vacuum. 1LT4140 is required to be isolated. The fill evolution will out range 1LE4138. 1-LG-4139 is a wide range physical level indicator. 1LE4139 is a wide range electronic level indicator. **[B0597]**
- 1LE4139 and 1-LG-4139 share a common variable leg and are **NOT** independent from each other. These instruments are independent from 4136, 4137 and 1LE4138. 4136, 4137 and 1LE4138 are independent from each other.

8. **CHECK** at least 2 independent RCS level indications are available. ____
   - MLMS on the Refueling Level Cart, 4136 ____
   - MLMS on the Refueling Level Cart, 4137 ____
   - RCS level indicator on the Refueling Level Cart, 1LE4139 ____
   - Local refueling level indicator, 1-LG-4139 ____

   a. **IF** 4136 will be used,
   THEN:

      (1) **ENSURE SHUT** 1PDT121A MLMS ISOLATION, 1-RC-1295. ____

      (2) **ENSURE** the instrument isolations are open:

         - 1PDT121A HEADER DRAIN, 1-RC-1293 ____
         - 1PDT121A HEADER B/U DRAIN, 1-RC-1294 ____
         - PZR INSTR HDR VENT SOUTH, 1-RC-1168 ____

   b. **IF** 4137 will be used,
   THEN:

      (1) **ENSURE SHUT** 1PDT111A MLMS ISOLATION, 1-RC-1292. ____

      (2) **ENSURE** the instrument isolations are open:

         - 1PDT111A HEADER DRAIN, 1-RC-1290 ____
         - 1PDT111A HEADER B/U DRAIN, 1-RC-1291 ____
         - PZR INSTR HDR VENT NORTH, 1-RC-1185 ____

6.16.A.8 PREPARE TO DRAW VACUUM (Continued) **INITIALS**

c. **IF** 1LE4139 or 1-LG-4139 will be used, **THEN**:

(1) **ENSURE** the instrument drains are shut:

- UPPER DRAIN LG-4139, 1-RC-1438 ____
- LOWER DRAIN LG-4139, 1-RC-1439 ____
- DRAIN LE-4139, 1-RC-1437 ____

(2) **ENSURE** the instrument isolations are open:

- LOWER ISOL LE-4139, 1-RC-1430 ____
- LOWER ISOL LG-4139, 1-RC-1431 ____
- UPPER ISOL LG-4139, 1-RC-1429 ____
- UPPER ISOL LE-4139, 1-RC-1436 ____

CAUTION
Operating experience has shown that 1-RC-1238 must be shut to prevent loss of level indication on 1LE4139 and 1-LG-4139 due to vacuum drawing air through the tygon tube and into the level sensing lines.

d. **ENSURE SHUT** LOCAL REFUEL LVL ISOL, 1-RC-1238. ____

9. **PLACE** at least two Core Exit Thermocouples, one each from ZA **AND** ZB and from different core quadrants, on Recorder Trend. ____

10. **PLACE** Typed Trend Blocks 26 **AND** 27 on a five minute trend for the duration of the RCS fill. ____

11. **ENSURE OPEN** Component Cooling Containment isolation valves: ____

- CC CNTMT SUPPLY.....1-CC-3832-CV
- CC CNTMT RETURN.....1-CC-3833-CV

NOTE
Actual S/G level may be determined by comparing remote indicated level to FIGURE 6 **OR** by use of the local sightglass.

12. **ENSURE** ONE of the following conditions exist:

- BOTH S/Gs are between (-)40 and (+)60 inches actual level. ____
- An exception for S/G level requirement has been approved by the GS-SO or M-NO.

Exception Approval Verified By:_____
Shift Manager

6.16.A PREPARE TO DRAW VACUUM (Continued) **INITIALS**

NOTE
S/G secondary temperature will be required greater than 85° F prior to solid water operation in Section 6.16.D.

13. **CHECK** the S/G secondary temperature using a hand pyrometer or with other calibrated temperature instruments, with a maximum tolerance of (±) 5° .

    S/G Secondary Temperature _____ ° F ____

14. **IF** the S/G secondary temperature is less than 85° F, **THEN PERFORM** Verification Requirements of TRM TVR 15.7.1.1, hourly, as required. ____

15. **ENSURE** SDC Purification SECURED **PER** OI-2D, PURIFICATION SYSTEM OPERATION. ____

6.16.A PREPARE TO DRAW VACUUM (Continued) **INITIALS**

NOTE

- Calculations show that vapor may form in the SDC suction line high point if actual values exceed 2045 GPM with the RCS at 37.5 ft. elevation, 110° F and 27.38 inHg vacuum. Procedure values account for instrument uncertainties. **[B1143]**
- SDC Flow Control Valve, 1-SI-306-CV, fails open on a loss of Instrument Air. Therefore, SDC flow is controlled by throttling two (2) LPSI Header valves to prevent vapor formation in the SDC suction line high point in the event of a loss of Instrument Air.

CAUTION

To prevent damage to the motor operators, LPSI Header valves should **NOT** be jogged more than 5 times in 2 minutes, allowing at least 5 minutes for the motor and overload relay to cool before operating the MOV again. To allow the MOV motor to coast to a stop before reversing direction, there should be a wait of approximately 5 seconds before reversing direction of the MOV valve operator. **[B0038]**

16. **ESTABLISH** LPSI flow control using two (2) LPSI Header valves as follows: **[B0072]**
(N/A if conditions have already been established)

a. **VERIFY** no more than one LPSI pump operating. ____

NOTE

1-FIC-306 is placed in manual when throttling LPSI HDR isolation valves, to prevent 1-SI-306-CV from opening trying to maintain flow, thus robbing flow from 1-SI-657-CV.

b. **PLACE** SDC Flow Controller, 1-FIC-306, in MANUAL. ____

CAUTION

The boration flow path shall be aligned to a loop with SDC flow.

c. **ENSURE** a LPSI HDR isolation is open in the same loop as the boration flow path **AND SHUT** two (2) LPSI HDR isolation valves **AND ENSURE** they are in PULL TO OVERRIDE. ____

6.16.A.16 PREPARE TO DRAW VACUUM (Continued) **INITIALS**

CAUTION
A reduction in RCS boron concentration from a source whose boron concentration is LESS THAN the present SDM requirements of the COLR, is **NOT** permitted when RCS flow is less than 3000 GPM.

d. **THROTTLE** the remaining two (2) LPSI HDR valves in PULL TO OVERRIDE to obtain between 900-950 GPM in each LPSI Loop. ____

NOTE
As temperature control allows, SDC flow should be maintained low in the band to maximize NPSH.

e. **ADJUST** SDC Flow Controller, 1-FIC-306, to obtain a SDC flowrate of between 1500 and 1800 GPM. ____

(1) **IF** 1-FIC-306 is shut **AND** SDC flowrate is greater than 1800 GPM,
THEN ADJUST the SDC TEMP CONTR, 1-HIC-3657. ____

f. **PLACE** SDC Flow Controller, 1-FIC-306, in AUTO. ____

NOTE
LPSI flow alarms may be adjusted as necessary to prevent nuisance alarms.

g. **ADJUST** the setpoints for the LPSI flow alarms on the Refueling Level Cart using ATTACHMENT 4, REFUELING LEVEL CART INSTRUCTIONS:

- 0CRT4136
  - 1FT306 High Flow Alarm Limit.....1900 GPM ____
  - 1FT306 Low Flow Alarm Limit.....1450 GPM ____
- 0CRT4137
  - 1FT306 High Flow Alarm Limit.....1900 GPM ____
  - 1FT306 Low Flow Alarm Limit.....1450 GPM ____

17. **VERIFY** valves aligned to the VACUUM POSITION **PER** ATTACHMENT 3, RCS FILL VALVE ALIGNMENT. ____

****** END ******

6.16 VACUUM FILL [B1143] (Continued) **INITIALS**

B. DRAW RCS VACUUM

CAUTION
Portable radio usage in Containment shall be in accordance with NO-1-113.

1. **DISPATCH** operators into Containment, with communications available with the Control Room. ____

NOTE
Breaking vacuum from ANY condition will **NOT** have a negative impact on nuclear safety.

2. **IF** SDC is lost at any time while the RCS is under vacuum, **THEN IMPLEMENT** the appropriate AOP, **AND BREAK** vacuum as follows:

   a. **DEPRESS** the Vacuum Pump STOP button. ____

   b. **FULLY OPEN** the EMERGENCY VACUUM BREAKER ISOLATION valve, 0-RVF-6. ____

   c. **SHUT** the INLET ISOLATION valve, 0-RVF-5. ____

   d. **IF** directed, **THEN EVACUATE** from the Containment. ____

NOTE
1-LT-4140 is **NOT** rated for vacuum. 1-LT-4140 is OOS when 1-RC-1235 is shut.

3. **SHUT** 1-RC-4140-LT ISOL, 1-RC-1235. ____

4. **ALIGN** Vacuum Pump skid to HDR VENT ISOL LG-4139 & LE-4139, 1-RC-1432:

   a. **NOTIFY** Mechanical Maintenance to attach the vacuum hose from vacuum manifold to HDR VENT ISOL LG-4139 & LE-4139, 1-RC-1432. ____

   b. **ENSURE** hose connected from vacuum manifold to HDR VENT ISOL LG-4139 & LE-4139, 1-RC-1432. ____

   c. **ENSURE OPEN** HDR VENT ISOL LG-4139 & LE-4139, 1-RC-1432. ____

6.16.B DRAW RCS VACUUM (Continued) **INITIALS**

5. **ENSURE OPEN** the Reactor Vessel Vent valves.

   - RX VSL VENT ISOL, 1-RC-274 ____
   - RX VSL VENT STOP, 1-RC-275 ____

CAUTION

- Do **NOT** remove the oil fill plug while the pump is running.
- Fluid level should be checked at the fill line, while the vacuum pump is **NOT** running, per Tech Manual 15876-001, V-MAX Oil-Sealed Liquidring Vacuum Pump System.

6. **ENSURE** level in separator reservoir at the FILL LINE (+1/2, -0 inches) on the sight guage. ____

NOTE

Refer to FIGURE 7, RCS VACUUM FILL EQUIPMENT.

7. **ALIGN** the Vacuum Pump.

   a. **ENSURE OPEN** the following valves:

      - REACTOR COOLANT SYSTEM VACUUM GAUGE ISOLATION valve, 0-RVF-20 ____
      - OIL SUPPLY ISOLATION valve, 0-RVF-7 ____
      - EMERGENCY VACUUM BREAKER ISOLATION valve, 0-RVF-6 ____

   b. **ENSURE SHUT** the INLET ISOLATION valve, 0-RVF-5. ____

CAUTION

The Vacuum Pump should always have a suction source to prevent cavitation and pump damage.

8. **CRACK OPEN** the INLET VACUUM BREAKER ISOLATION valve, 0-RVF-4. ____

NOTE

Vacuum Pump will **NOT** start unless the red HIGH TEMP light is reset.

9. **DEPRESS** the Vacuum Pump START button. ____

6.16.B DRAW RCS VACUUM (Continued) **INITIALS**

10. **WHEN** the vacuum pump has run for approximately 2-3 minutes, **THEN PERFORM** the following:

    a. **DEPRESS** the Vacuum Pump STOP button. ____

    b. **ENSURE** level in separator reservoir at the FILL LINE (+1/2, -0 inches) on the sight gauge. ____

> **NOTE**
> Vacuum Pump will **NOT** start unless the red HIGH TEMP light is reset.

11. **DEPRESS** the Vacuum Pump START button. ____

12. **THROTTLE** the INLET VACUUM BREAKER ISOLATION valve, 0-RVF-4, to **MAINTAIN** the VACUUM PUMP SUCTION pressure, 0-RVF-15-PI, between 10 and 15 inHg vacuum. ____

> **NOTE**
> The Vacuum Pump should reach operating temperature in 15-30 minutes.

13. **VERIFY** VACUUM PUMP OUTLET temperature, 0-RVF-13-TI, stabilizes below 185° F. ____

6.16.B DRAW RCS VACUUM (Continued) **INITIALS**

NOTE

- In addition to REACTOR COOLANT SYSTEM VACUUM, 0-RVF-16-PI, on the vacuum manifold, RCS vacuum may be monitored on 0PT4136A, 0PT4136B, 0PT4137A and 0PT4137B on the Refueling Level Cart if the MLMS pressure transducers are installed.
- SUBCOOLING A/B MARGIN TO SATURATION LO alarms are expected when drawing RCS vacuum.

14. **WHEN** the VACUUM PUMP OUTLET temperature has stabilized, **THEN COMMENCE** drawing vacuum on the RCS. ____

    a. **SHUT** the EMERGENCY VACUUM BREAKER ISOLATION valve, 0-RVF-6. ____

NOTE
Steps b. and c. should be performed concurrently.

    b. **SHUT** the INLET VACUUM BREAKER ISOLATION valve, 0-RVF-4. ____

    c. **THROTTLE OPEN** the INLET ISOLATION valve, 0-RVF-5 to maintain the VACUUM PUMP SUCTION pressure, 0-RVF-15-PI, between 10 and 15 inHg vacuum. ____

NOTE
The fall-away plate should remain in place with approximately 0.5 inHg vacuum.

CAUTION
To permit use of the fall-away plate for the ≥8 in^2 vent for LTOP, NO device is permitted to hold the fall-away plate in place. It must be capable of fully opening by gravity in the event that vacuum is lost.

    d. **PLACE** the fall-away plate, centered, on the 4-inch hose flange **AND HOLD** until vacuum maintains the plate in position. ____

6.16.B.14 DRAW RCS VACUUM (Continued) **INITIALS**

NOTE
Maintaining vacuum pump suction pressure close to 10 inHg vacuum by throttling open 0-RVF-5 will draw the RCS vacuum faster.

e. **THROTTLE** the INLET ISOLATION valve, 0-RVF-5, as follows:

(1) **MAINTAIN** the VACUUM PUMP SUCTION pressure, 0-RVF-15-PI, between 10 and 15 inHg vacuum. ____

(2) **WHEN** the REACTOR COOLANT SYSTEM VACUUM, 0-RVF-16-PI, reaches 10 inHg vacuum, **THEN FULLY OPEN** the INLET ISOLATION valve, 0-RVF-5. ____

NOTE
- 11/12 LPSI PP SUCT PRESS LO alarms are expected. Suction pressure should be between 5 and 7 PSIG initially at full vacuum before fill.
- SDC perturbations should be avoided, however, shifting LPSI pumps is permissible under vacuum conditions.
- Most of the air dissolved in the RCS will be drawn off into the loop piping gas space and into the pressurizer. Industry Operating Experience has shown that a small quantity of air evolves from solution at an intermediate vacuum range (10 - 15 inHg) and may cause temporary oscillations in SDC flow, which diminish as vacuum progresses. This slight fluctuation is to be expected and should **NOT** be construed as pump cavitation.

15. **MONITOR** LPSI PP operation. ____

a. **STATION** an operator locally in the vicinity of the running LPSI PP. ____

b. **IF** desired, **THEN REMOVE** 1C09 "11(12) LPSI PP SUCT PRESS LO" alarms from service. ____ 04800

6.16.B DRAW RCS VACUUM (Continued) **INITIALS**

NOTE

- Industry Operating Experience has shown that 1LE4138 may be affected by ripples created by air flow across the surface of the coolant in the hot leg.
- After 0-RVF-5 is fully opened at 10 inHg RCS vacuum, final vacuum should be reached in approximately 70 minutes. Refer to FIGURE 8, RCS EVACUATION TIME.

16. **MONITOR** for in-leakage. ____

    - RCS evacuation time
    - RCS level
    - Quench Tank level/pressure
    - VCT level/pressure

    a. **LOCATE** and **ISOLATE** any leakage sources.

    b. **OPERATE** the Vacuum Pump as required.

CAUTION

High RCS level can prevent adequate evacuation of SG tubes, shortening evacuation time.

    c. **IF** evacuation time is significantly less than FIGURE 8, RCS EVACUATION TIME due to high RCS level, **THEN BREAK** vacuum **AND RE-ESTABLISH** initial conditions to draw vacuum.

6.16.B DRAW RCS VACUUM (Continued) **INITIALS**

NOTE
1LE4139 and 1-LG-4139 share a common variable leg and are **NOT** independent from each other. These instruments are independent from 4136, 4137 and 1LE4138. 4136, 4137 and 1LE4138 are independent from each other.

CAUTION
1LT4140 is calibrated to atmospheric pressure and will **NOT** provide accurate level indication under vacuum conditions.

17. **CHECK** at least 2 independent RCS level indicators agree within 0.5 feet, while drawing RCS vacuum. **[B0597]** ____

- MLMS on the Refueling Level Cart, 4136 ____
- MLMS on the Refueling Level Cart, 4137 ____
- RCS level indicator on the Refueling Level Cart, 1LE4138 ____
- RCS level indicator on the Refueling Level Cart, 1LE4139 ____
- Local refueling level indicator, 1-LG-4139 ____

a. **IF** the indications do **NOT** agree,
THEN STOP drawing RCS vacuum and allow system to stabilize before continuing. ____

b. **IF** the indications do **NOT** return to within 0.5 feet,
THEN CONTACT the GS-SO to determine course of action. ____

6.16.B DRAW RCS VACUUM (Continued) **INITIALS**

NOTE

- Due to the air density change, head loss in the vacuum hoses is estimated to be 2.3 inHg at the start of the evacuation, lowering to 0.32 inHg at full vacuum.
- It may be desired to run the Vacuum Pump on fresh air to remove moisture from the oil.

18. **PERFORM** the following at any time, to monitor RCS vacuum with no flow, **OR** to run the Vacuum Pump on fresh air:

NOTE
Steps a. and b. should be performed concurrently.

a. **SHUT** the INLET ISOLATION valve, 0-RVF-5. ____

b. **THROTTLE** the INLET VACUUM BREAKER ISOLATION valve, 0-RVF-4, as necessary to maintain VACUUM PUMP SUCTION pressure, 0-RVF-15-PI, between 10 and 15 inHg vacuum. ____

c. **CHECK** REACTOR COOLANT SYSTEM VACUUM, 0-RVF-16-PI. ____

NOTE
Steps d. and e. should be performed concurrently.

d. **SLOWLY OPEN** the INLET ISOLATION valve, 0-RVF-5. ____

- **MAINTAIN** the VACUUM PUMP SUCTION pressure, 0-RVF-15-PI, at least 10 inHg vacuum.

e. **THROTTLE** the INLET VACUUM BREAKER ISOLATION valve, 0-RVF-4, as necessary to maintain REACTOR COOLANT SYSTEM VACUUM, 0-RVF-16-PI, between 25.5 and 26.5 inHg vacuum. ____

CAUTION
23 inHg is the minimum allowable value to be drawn on the SG tubes for success.

- **IF** 25.5 inHg can **NOT** be achieved, **THEN MAINTAIN** greater than 23 inHg vacuum.

6.16.B DRAW RCS VACUUM (Continued) **INITIALS**

19. **IF** required at any time, while maintaining RCS vacuum, **THEN PERFORM** the following to **STOP** and **RESTART** the Vacuum Pump:

    a. **STOP** the Vacuum Pump:

        (1) **DEPRESS** the Vacuum Pump STOP button. ____

        (2) **SHUT** the INLET ISOLATION valve, 0-RVF-5. ____

    b. **RESTART** the Vacuum Pump:

        (1) **CRACK OPEN** the INLET ISOLATION valve, 0-RVF-5. ____

        (2) **DEPRESS** the Vacuum Pump START button. ____

> **NOTE**
> Steps (3) and (4) should be performed concurrently.

        (3) **SLOWLY OPEN** the INLET ISOLATION valve, 0-RVF-5. ____

            - **MAINTAIN** the VACUUM PUMP SUCTION pressure, 0-RVF-15-PI, at least 10 inHg vacuum.

        (4) **THROTTLE** the INLET VACUUM BREAKER ISOLATION valve, 0-RVF-4, as necessary to maintain REACTOR COOLANT SYSTEM VACUUM, 0-RVF-16-PI, between 25.5 and 26.5 inHg vacuum. ____

> **CAUTION**
> 23 inHg is the minimum allowable value to be drawn on the SG tubes for success.

            - **IF** 25.5 inHg can **NOT** be achieved, **THEN MAINTAIN** greater than 23 inHg vacuum.

6.16.B DRAW RCS VACUUM (Continued) **INITIALS**

NOTE
Operating experience has shown that changes in RCS vacuum can affect indicated RCS level. Reducing vacuum leads to a lower indicated RCS level.

20. **MAINTAIN** the REACTOR COOLANT SYSTEM VACUUM, 0-RVF-16-PI, between 25.5 and 26.5 inHg vacuum (≈2.2-1.7 PSIA) by **THROTTLING** the INLET VACUUM BREAKER ISOLATION valve, 0-RVF-4. ____

CAUTION
23 inHg is the minimum allowable value to be drawn on the SG tubes for success.

- **IF** 25.5 inHg can **NOT** be achieved, **THEN MAINTAIN** greater than 23 inHg vacuum.

****** END ******

6.16 VACUUM FILL [B1143] (Continued) **INITIALS**

C. FILL THE RCS AND BREAK VACUUM

> **CAUTION**
> Once the RCS has been filled above the hot leg, any vacuum reduction will result in RCS level lowering as inventory transfers into the SG tubes. If the top of the hot leg is uncovered the transfer of inventory will terminate.

1. **IF** SDC is lost at any time while the RCS is under vacuum,
   THEN IMPLEMENT the appropriate AOP,
   AND BREAK vacuum as follows:

> **NOTE**
> Step a. should be performed concurrently with the remaining steps.

a. **STOP** filling the RCS:

- **IF** filling via LPSI,
  THEN: ____
  - **SHUT** 11 LPSI PP NORM SUCT ISOL, 1-SI-444.

  OR

  - **SHUT** 12 LPSI PP NORM SUCT ISOL, 1-SI-432.
- **IF** filling via HPSI Header,
  THEN PLACE the open HPSI HDR MOV(s) in PULL TO OVERRIDE, SHUT **[B0064].** ____

b. **DEPRESS** the Vacuum Pump STOP button. ____

c. **FULLY OPEN** the EMERGENCY VACUUM BREAKER ISOLATION valve, 0-RVF-6. ____

d. **SHUT** the INLET ISOLATION valve, 0-RVF-5. ____

e. **IF** directed,
   THEN EVACUATE from the Containment. ____

6.16.C FILL THE RCS AND BREAK VACUUM (Continued) **INITIALS**

NOTE

- Due to the air density change, head loss in the vacuum hoses is estimated to be 2.3 inHg at the start of the evacuation, lowering to 0.32 inHg at full vacuum.
- It may be desired to run the Vacuum Pump on fresh air to remove moisture from the oil.

2. **PERFORM** the following at any time, to monitor RCS vacuum with no flow, **OR** to run the Vacuum Pump on fresh air:

NOTE
Steps a. and b. should be performed concurrently.

a. **SHUT** the INLET ISOLATION valve, 0-RVF-5. ____

b. **THROTTLE** the INLET VACUUM BREAKER ISOLATION valve, 0-RVF-4, as necessary to maintain VACUUM PUMP SUCTION pressure, 0-RVF-15-PI, between 10 and 15 inHg vacuum. ____

c. **CHECK** REACTOR COOLANT SYSTEM VACUUM, 0-RVF-16-PI. ____

NOTE
Steps d. and e. should be performed concurrently.

d. **SLOWLY OPEN** the INLET ISOLATION valve, 0-RVF-5. ____

- **MAINTAIN** the VACUUM PUMP SUCTION pressure, 0-RVF-15-PI, at least 10 inHg vacuum.

e. **THROTTLE** the INLET VACUUM BREAKER ISOLATION valve, 0-RVF-4, as necessary to maintain REACTOR COOLANT SYSTEM VACUUM, 0-RVF-16-PI, between 25.5 and 26.5 inHg vacuum. ____

CAUTION
23 inHg is the minimum allowable value to be drawn on the SG tubes for success.

- **IF** 25.5 inHg can **NOT** be achieved, **THEN MAINTAIN** greater than 23 inHg vacuum.

6.16.C FILL THE RCS AND BREAK VACUUM (Continued) **INITIALS**

3. **IF** required at any time, while maintaining RCS vacuum, **THEN PERFORM** the following to **STOP** and **RESTART** the Vacuum Pump:

   a. **STOP** the Vacuum Pump:

      (1) **DEPRESS** the Vacuum Pump STOP button. ____

      (2) **SHUT** the INLET ISOLATION valve, 0-RVF-5. ____

   b. **RESTART** the Vacuum Pump:

      (1) **CRACK OPEN** the INLET ISOLATION valve, 0-RVF-5. ____

      (2) **DEPRESS** the Vacuum Pump START button. ____

> **NOTE**
> Steps (3) and (4) should be performed concurrently.

      (3) **SLOWLY OPEN** the INLET ISOLATION valve, 0-RVF-5. ____

      - **MAINTAIN** the VACUUM PUMP SUCTION pressure, 0-RVF-15-PI, at least 10 inHg vacuum.

      (4) **THROTTLE** the INLET VACUUM BREAKER ISOLATION valve, 0-RVF-4, as necessary to maintain REACTOR COOLANT SYSTEM VACUUM, 0-RVF-16-PI, between 25.5 and 26.5 inHg vacuum. ____

> **CAUTION**
> 23 inHg is the minimum allowable value to be drawn on the SG tubes for success.

      - **IF** 25.5 inHg can **NOT** be achieved, **THEN MAINTAIN** greater than 23 inHg vacuum.

6.16.C FILL THE RCS AND BREAK VACUUM (Continued) **INITIALS**

NOTE

- Operating experience has shown that while filling above the top of the Hot leg until the Reactor Vessel Head is filled, 4136 will lag behind the other level instruments.
- 1LE4139 and 1-LG-4139 share a common variable leg and are **NOT** independent from each other. These instruments are independent from 4136, 4137 and 1LE4138. 4136, 4137 and 1LE4138 are independent from each other.
- The upper range of the Ultrasonic Level indicator, 1LE4138 is the top of the hot leg, 39.08 ft. elevation.

CAUTION

1LT4140 is calibrated to atmospheric pressure and will **NOT** provide accurate level indication under vacuum conditions.

4. **CHECK** at least 2 independent RCS level indicators agree within 0.5 feet, during the RCS fill below 55 ft. elevation. **[B0597]** ____

   - MLMS on the Refueling Level Cart, 4136
   - MLMS on the Refueling Level Cart, 4137
   - RCS level indicator on the Refueling Level Cart, 1LE4139
   - Local refueling level indicator, 1-LG-4139

   a. **IF** the indications do **NOT** agree,
   THEN STOP drawing RCS vacuum and allow system to stabilize before continuing. ____

   b. **IF** the indications do **NOT** return to within 0.5 feet,
   THEN CONTACT the GS-SO to determine course of action. ____

6.16.C FILL THE RCS AND BREAK VACUUM (Continued) **INITIALS**

NOTE

- Operating experience has shown that changes in RCS vacuum can affect indicated RCS level. Reducing vacuum leads to a lower indicated RCS level.
- The INLET VACUUM BREAKER ISOLATION valve, 0-RVF-4 is expected to be throttled in the shut direction during filling operation to maintain vacuum.

5. **MAINTAIN** the REACTOR COOLANT SYSTEM VACUUM, 0-RVF-16-PI, between 25.5 and 26.5 inHg vacuum (≈2.2-1.7 PSIA) by **THROTTLING** the INLET VACUUM BREAKER ISOLATION valve, 0-RVF-4. ____

CAUTION

23 inHg is the minimum allowable value to be drawn on the SG tubes for success.

- **IF** 25.5 inHg can **NOT** be achieved, **THEN MAINTAIN** greater than 23 inHg vacuum.

CAUTION

To prevent cooling the Reactor Vessel below 70° F and S/Gs below 85° F, CET temperatures must be maintained above 95° F.

6. **ADJUST** SDC TEMP CONTR, 1-HIC-3657, as necessary to maintain RCS temperature between 95° F and 110° F using CETs during the RCS fill. ____

6.16.C FILL THE RCS AND BREAK VACUUM (Continued) **INITIALS**

NOTE

- Reduced Inventory requirements will be maintained until 216 inches Pressurizer level due to the effect of inventory transferring into the SG tubes when vacuum is broken.
- Filling via the LPSI pump will reduce flow at the SDC suction line high point and raise LPSI suction pressure.

7. **FILL** the RCS by performing one or more of the following:

   - **FILL** the RCS via 11 LPSI PP piping as follows:

     a. **VERIFY OPEN** 11 RWT OUT, 1-SI-4142-MOV. ____

CAUTION

- Fill rate must be coordinated to ensure RCS vacuum is maintained.
- High fill rates can result in moisture being drawn up into vacuum hoses from the Reactor Vessel Head.
- High fill rates can increase deviations between the RCS level indications.

     b. **SLOWLY CRACK OPEN** 11 LPSI PP NORM SUCT ISOL, 1-SI-444 until the desired flow rate is achieved. ____

     c. **CLOSELY MONITOR** the following:

        - RCS cooldown rate
        - RCS level
        - RCS vacuum

   - **FILL** the RCS via 12 LPSI PP piping as follows:

     a. **VERIFY OPEN** 11 RWT OUT, 1-SI-4143-MOV. ____

6.16.C.7 FILL THE RCS AND BREAK VACUUM (Continued) **INITIALS**

CAUTION

- Fill rate must be coordinated to ensure RCS vacuum is maintained.
- High fill rates can result in moisture being drawn up into vacuum hoses from the Reactor Vessel Head.
- High fill rates can increase deviations between the RCS level indications.

b. **SLOWLY CRACK OPEN** 12 LPSI PP NORM SUCT ISOL, 1-SI-432 until the desired flow rate is achieved. ____

c. **CLOSELY MONITOR** the following:

- RCS cooldown rate
- RCS level
- RCS vacuum

- **IF** desired to fill via HPSI Header, **THEN FILL** the RCS as follows:

  - **IF** desired to fill via the AUX HPSI HDR, **THEN PERFORM** the following:

    a. **VERIFY OPEN** 11 RWT OUT, 1-SI-4142-MOV. ____

    b. **VERIFY OPEN** HPSI AUX HDR ISOL, 1-SI-656-MOV. ____

6.16.C.7.c **FILL THE RCS AND BREAK VACUUM (Continued)** **INITIALS**

CAUTION
Fill rate must be coordinated to ensure RCS vacuum is maintained.

c. **THROTTLE OPEN** the desired Aux HPSI Loop isolation(s) until the desired flow rate is achieved: ____

- 11A AUX HPSI HDR, 1-SI-617-MOV
- 11B AUX HPSI HDR, 1-SI-627-MOV
- 12A AUX HPSI HDR, 1-SI-637-MOV
- 12B AUX HPSI HDR, 1-SI-647-MOV

d. **CLOSELY MONITOR** the following:

- RCS cooldown rate
- RCS level
- RCS vacuum

- IF desired to fill via the MAIN HPSI HDR, THEN **PERFORM** the following:

a. **VERIFY OPEN** 11 RWT OUT, 1-SI-4143-MOV. ____

b. **VERIFY OPEN** HPSI MAIN HDR ISOL, 1-SI-654-MOV. ____

CAUTION
Fill rate must be coordinated to ensure RCS vacuum is maintained.

c. **THROTTLE OPEN** the desired Main HPSI Loop isolation(s) until the desired flow rate is achieved: ____

- 11A MAIN HPSI HDR, 1-SI-616-MOV
- 11B MAIN HPSI HDR, 1-SI-626-MOV
- 12A MAIN HPSI HDR, 1-SI-636-MOV
- 12B MAIN HPSI HDR, 1-SI-646-MOV

d. **CLOSELY MONITOR** the following:

- RCS cooldown rate
- RCS level
- RCS vacuum

6.16.C FILL THE RCS AND BREAK VACUUM (Continued) **INITIALS**

> **NOTE**
> The fill rate is reduced to equalize the Reactor Vessel Head and Pressurizer as the CEDMs are covered.

8. **WHEN** RCS level reaches the 48 ft. elevation,
   THEN REDUCE the RCS fill rate. ____

> **NOTE**
> Pressurizer level shall be monitored using 1-LI-103. Additionally computer point L110X! or L110Y! may be used if available.

9. **WHEN** RCS level reaches the 53 ft. elevation,
   THEN CHECK Pressurizer level indicates 50(± 12) inches. ____

   a. **IF** the indications do **NOT** agree,
      THEN STOP the fill and allow system to stabilize before continuing. ____

   b. **IF** the indications do **NOT** return,
      THEN CONTACT the GS-SO to determine course of action. ____

10. **WHEN** Pressurizer level reaches 200 inches,
    THEN STOP filling the RCS.

    - **IF** filling via LPSI,
      THEN:

      - **SHUT** 11 LPSI PP NORM SUCT ISOL, 1-SI-444. ____

      OR

      - **SHUT** 12 LPSI PP NORM SUCT ISOL, 1-SI-432. ____

    - **IF** filling via HPSI Header,
      THEN perform the following:

      a. **PLACE** the open HPSI HDR MOV(s) in PULL TO OVERRIDE, SHUT **[B0064]** ____

6.16.C FILL THE RCS AND BREAK VACUUM (Continued) **INITIALS**

NOTE
RCS fill is stopped to ensure the Reactor Vessel Head is full.

11. **IF** Pressurizer level drops below 50 inches, **THEN PERFORM** the following:

    a. **RECOMMENCE** filling the RCS:

    - **FILL** the RCS via 11 LPSI PP piping as follows:

      (1) **VERIFY OPEN** 11 RWT OUT, 1-SI-4142-MOV. ____

CAUTION
- Fill rate must be coordinated to ensure RCS vacuum is maintained.
- High fill rates can increase deviations between the RCS level indications.

      (2) **SLOWLY CRACK OPEN** 11 LPSI PP NORM SUCT ISOL, 1-SI-444 until the desired flow rate is achieved. ____

      (3) **CLOSELY MONITOR** the following:

      - RCS cooldown rate
      - RCS level
      - RCS vacuum

    - **FILL** the RCS via 12 LPSI PP piping as follows:

      (1) **VERIFY OPEN** 11 RWT OUT, 1-SI-4143-MOV. ____

6.16.C.11.a **FILL THE RCS AND BREAK VACUUM (Continued)** **INITIALS**

CAUTION

- Fill rate must be coordinated to ensure RCS vacuum is maintained.
- High fill rates can increase deviations between the RCS level indications.

(2) **SLOWLY CRACK OPEN** 12 LPSI PP NORM SUCT ISOL, 1-SI-432 until the desired flow rate is achieved. ____

(3) **CLOSELY MONITOR** the following:

- RCS cooldown rate
- RCS level
- RCS vacuum

- **IF** desired to fill via HPSI Header, **THEN FILL** the RCS as follows:

  - **IF** desired to fill via the AUX HPSI HDR, **THEN PERFORM** the following:

    (1) **VERIFY OPEN** 11 RWT OUT, 1-SI-4142-MOV. ____

    (2) **VERIFY OPEN** HPSI AUX HDR ISOL, 1-SI-656-MOV. ____

CAUTION

Fill rate must be coordinated to ensure RCS vacuum is maintained.

(3) **THROTTLE OPEN** the desired Aux HPSI Loop isolation(s) until the desired flow rate is achieved: ____

- 11A AUX HPSI HDR, 1-SI-617-MOV
- 11B AUX HPSI HDR, 1-SI-627-MOV
- 12A AUX HPSI HDR, 1-SI-637-MOV
- 12B AUX HPSI HDR, 1-SI-647-MOV

(4) **CLOSELY MONITOR** the following:

- RCS cooldown rate
- RCS level
- RCS vacuum

- **IF** desired to fill via the MAIN HPSI HDR, **THEN PERFORM** the following:

  (1) **VERIFY OPEN** 11 RWT OUT, 1-SI-4143-MOV. ____

  (2) **VERIFY OPEN** HPSI MAIN HDR ISOL, 1-SI-654-MOV. ____

6.16.C.11.a.3 **FILL THE RCS AND BREAK VACUUM (Continued)** **INITIALS**

CAUTION
Fill rate must be coordinated to ensure RCS vacuum is maintained.

(3) **THROTTLE OPEN** the desired Main HPSI Loop isolation(s) until the desired flow rate is achieved: ____

- 11A MAIN HPSI HDR, 1-SI-616-MOV
- 11B MAIN HPSI HDR, 1-SI-626-MOV
- 12A MAIN HPSI HDR, 1-SI-636-MOV
- 12B MAIN HPSI HDR, 1-SI-646-MOV

(4) **CLOSELY MONITOR** the following:

- RCS cooldown rate
- RCS level
- RCS vacuum

b. **WHEN** Pressurizer level reaches 200 inches, **THEN STOP** filling the RCS.

- **IF** filling via LPSI, **THEN**:

  - **SHUT** 11 LPSI PP NORM SUCT ISOL, 1-SI-444. ____

  OR

  - **SHUT** 12 LPSI PP NORM SUCT ISOL, 1-SI-432. ____

- **IF** filling via HPSI Header, **THEN** perform the following:

  (1) **PLACE** the open HPSI HDR MOV(s) in PULL TO OVERRIDE, SHUT **[B0064]** ____

c. **REPEAT** Step 11.a and 11.b as necessary until Pressurizer level is stable above 50 inches for at least 5 minutes. ____

6.16.C FILL THE RCS AND BREAK VACUUM (Continued) **INITIALS**

NOTE
RCS fill is stopped to ensure the Reactor Vessel Head is full.

12. **WHEN** the RCS fill is stopped, **AND** Pressurizer level has been stable above 50 inches for at least 5 minutes,
THEN RECOMMENCE filling the RCS:

- **FILL** the RCS via 11 LPSI PP piping as follows:

  a. **VERIFY OPEN** 11 RWT OUT, 1-SI-4142-MOV. ____

CAUTION
- Fill rate must be coordinated to ensure RCS vacuum is maintained.
- High fill rates can increase deviations between the RCS level indications.

  b. **SLOWLY CRACK OPEN** 11 LPSI PP NORM SUCT ISOL, 1-SI-444 until the desired flow rate is achieved. ____

  c. **CLOSELY MONITOR** the following:

  - RCS cooldown rate
  - RCS level
  - RCS vacuum

- **FILL** the RCS via 12 LPSI PP piping as follows:

  a. **VERIFY OPEN** 11 RWT OUT, 1-SI-4143-MOV. ____

6.16.C.12 FILL THE RCS AND BREAK VACUUM (Continued) **INITIALS**

CAUTION

- Fill rate must be coordinated to ensure RCS vacuum is maintained.
- High fill rates can increase deviations between the RCS level indications.

b. **SLOWLY CRACK OPEN** 12 LPSI PP NORM SUCT ISOL, 1-SI-432 until the desired flow rate is achieved. ____

c. **CLOSELY MONITOR** the following:

- RCS cooldown rate
- RCS level
- RCS vacuum

- IF desired to fill via HPSI Header, THEN **FILL** the RCS as follows:

  - IF desired to fill via the AUX HPSI HDR, THEN **PERFORM** the following:

    a. **VERIFY OPEN** 11 RWT OUT, 1-SI-4142-MOV. ____

    b. **VERIFY OPEN** HPSI AUX HDR ISOL, 1-SI-656-MOV. ____

CAUTION

Fill rate must be coordinated to ensure RCS vacuum is maintained.

c. **THROTTLE OPEN** the desired Aux HPSI Loop isolation(s) until the desired flow rate is achieved: ____

- 11A AUX HPSI HDR, 1-SI-617-MOV
- 11B AUX HPSI HDR, 1-SI-627-MOV
- 12A AUX HPSI HDR, 1-SI-637-MOV
- 12B AUX HPSI HDR, 1-SI-647-MOV

d. **CLOSELY MONITOR** the following:

- RCS cooldown rate
- RCS level
- RCS vacuum

- IF desired to fill via the MAIN HPSI HDR, THEN **PERFORM** the following:

  a. **VERIFY OPEN** 11 RWT OUT, 1-SI-4143-MOV. ____

  b. **VERIFY OPEN** HPSI MAIN HDR ISOL, 1-SI-654-MOV. ____

6.16.C.12.c **FILL THE RCS AND BREAK VACUUM (Continued)** **INITIALS**

CAUTION
Fill rate must be coordinated to ensure RCS vacuum is maintained.

c. **THROTTLE OPEN** the desired Main HPSI Loop isolation(s) until the desired flow rate is achieved: ____

- 11A MAIN HPSI HDR, 1-SI-616-MOV
- 11B MAIN HPSI HDR, 1-SI-626-MOV
- 12A MAIN HPSI HDR, 1-SI-636-MOV
- 12B MAIN HPSI HDR, 1-SI-646-MOV

d. **CLOSELY MONITOR** the following:

- RCS cooldown rate
- RCS level
- RCS vacuum

13. **WHEN** Pressurizer level reaches 216 inches, **THEN PERFORM** the following:

CAUTION
Vacuum fill hoses are isolated before Pressurizer level is 241 inches (69 ft. elevation) to prevent water introduction to the vacuum fill hoses and vacuum pump.

- **ISOLATE** the RX vessel head vent line and RCS level indication vacuum fill hoses:
  - **SHUT** RX VSL VENT ISOL, 1-RC-274 ____
  - **SHUT** RX VSL VENT STOP, 1-RC-275 ____
  - **SHUT** HDR VENT ISOL LG-4139 & LE-4139, 1-RC-1432 ____
- **EXIT** Reduced Inventory requirements:
  - **SUSPEND** the limits on evolutions that would cause RCS **OR** SDC perturbations. ____
  - **NOTIFY** Radiation Safety Supervision the RCS is no longer in a reduced inventory condition. ____

6.16.C FILL THE RCS AND BREAK VACUUM (Continued) **INITIALS**

14. **WHEN** pressurizer level reaches 295 inches,
THEN SECURE filling the RCS.

- **IF** filling via LPSI,
THEN:

  - **ENSURE LOCKED SHUT** 11 LPSI PP NORM SUCT ISOL, 1-SI-444. ____

  OR

  - **ENSURE LOCKED SHUT** 12 LPSI PP NORM SUCT ISOL, 1-SI-432. ____

- **IF** filling via HPSI Header,
THEN perform the following:

  a. **PLACE** the open HPSI HDR MOV(s) in PULL TO OVERRIDE, SHUT **[B0064]** ____

  b. **RETURN** AUX and MAIN HPSI HDR ISOL to the desired position **PER** the CRS.

  - HPSI AUX HDR ISOL, 1-SI-656-MOV ____
  - HPSI MAIN HDR ISOL, 1-SI-654-MOV ____

NOTE
A Pressurizer level drop of approximately 100 inches is anticipated when breaking vacuum.

15. **WHEN** the RCS fill is secured,
THEN BREAK vacuum as follows:

  a. **RECORD** initial Pressurizer level: _____ ____

  b. **DEPRESS** the Vacuum Pump STOP button. ____

  c. **OPEN** the INLET VACUUM BREAKER ISOLATION valve, 0-RVF-4. ____

  d. **OPEN** the EMERGENCY VACUUM BREAKER ISOLATION valve, 0-RVF-6. ____

  e. **SHUT** the INLET ISOLATION valve, 0-RVF-5. ____

  f. **WHEN** Pressurizer level stabilizes,
  THEN RECORD final Pressurizer level: _____ ____

6.16.C FILL THE RCS AND BREAK VACUUM (Continued) **INITIALS**

16. **WHEN** RCS vacuum is broken,
THEN PERFORM the following:

> **CAUTION**
> To prevent damage to the motor operators, LPSI Header valves should **NOT** be jogged more than 5 times in 2 minutes, allowing at least 5 minutes for the motor and overload relay to cool before operating the MOV again. To allow the MOV motor to coast to a stop before reversing direction, there should be a wait of approximately 5 seconds before reversing direction of the MOV valve operator. **[B0038]**

a. Slowly **OPEN ALL** available LPSI HDR valves **AND ENSURE** that 1-FIC-306 maintains SDC flow. ____

b. **ADJUST** SDC flow to 3000 gpm using SDC FLOW CONTR, 1-FIC-306. ____

c. **TAKE ALL** available LPSI HDR valves out of PULL TO OVERRIDE. ____

17. **OPEN** 1-RC-4140-LT ISOL, 1-RC-1235, to restore 1-LT-4140 to service. ____

> **CAUTION**
> The MLMS pressure transducers should be isolated before the Pressurizer manway is installed to limit their possible pressure exposure.

18. **IF** the MLMS pressure transducers are installed,
THEN prior to installing the Pressurizer Manway, **SHUT** the following isolation valves to isolate the pressure transducers:

- 1PDT111A HEADER DRAIN, 1-RC-1290 ____
- 1PDT111A HEADER B/U DRAIN, 1-RC-1291 ____
- 1PDT121A HEADER DRAIN, 1-RC-1293 ____
- 1PDT121A HEADER B/U DRAIN, 1-RC-1294 ____
- PZR INSTR HDR VENT SOUTH, 1-RC-1168 ____
- PZR INSTR HDR VENT NORTH, 1-RC-1185 ____

19. **IF** desired,
THEN RESTORE 1C09 "11(12) LPSI PP SUCT PRESS LO" alarms to service. ____ 04800

6.16.C FILL THE RCS AND BREAK VACUUM (Continued) **INITIALS**

NOTE
When valves have been restored, APPENDIX 13, PRESSURIZER MANWAY RE-INSTALLATION CHECKLIST may be completed.

20. **RESTORE** valves to the RESTORATION POSITION **PER** ATTACHMENT 3, RCS FILL VALVE ALIGNMENT. ____

21. **ENSURE** TA-23, INSTALLATION AND REMOVAL OF RCS VACUUM FILL EQUIPMENT, has been completed to restore RCP Seals. ____

    - O-ring seals at the RCP couplings are removed.
    - FME caps on the vapor seal leakoff lines are removed.

22. **REQUEST** Plant Chemistry obtain an RCS boron sample. **[B0605]** ____

23. **IF** required,
    THEN ADJUST Pressurizer level to between 50 and 150 inches **PER** OI-3B, SHUTDOWN COOLING. ____

24. **IF** SDC Purification is desired,
    THEN PLACE Purification on SDC **PER** OI-2D, PURIFICATION SYSTEM OPERATION. ____

****** END ******

6.16 VACUUM FILL [B1143] (Continued) **INITIALS**

D. FILL THE RCS SOLID AND DRAW PRESSURIZER BUBBLE

1. **VERIFY** with I&C that Quench Tank **AND** Pressurizer Level Transmitter reference legs filled, vented, and placed in service: 04800

   a. Quench Tank Level Transmitter: ____

   - 1-LT-116

   b. Pressurizer Level Transmitters: ____

   - 1-LT-103
   - 1-LT-110X
   - 1-LT-110Y

2. **PREPARE** the Quench Tank for plant startup as follows:

   a. **ENSURE** S/G nitrogen blankets have been secured **PER** OI-12B, Section titled, SECURING S/G NITROGEN BLANKET. ____

> **NOTE**
> Maintaining Quench Tank pressure less than 1.5 PSIG helps prevent PORVs from leaking. **[B0771]**

   b. **PREPARE** the Quench Tank for plant startup **PER** OI-1B, QUENCH TANK OPERATIONS, SECTION 6.11, QT LINEUP FOR PLANT STARTUP AT LOW RCS PRESSURE. ____

3. **ENSURE** the following: **[B0270]**

   - RCP shaft couplings installed. ____
   - Pressurizer manway installed ____
   - The RWT contains sufficient volume to fill the RCS ____
   - The RWT boron concentration is greater than the RCS Shutdown Boron Concentration limit of NEOP 301 ____

4. **VERIFY** the S/G secondary temperature is greater than 85° F using a hand pyrometer or with other calibrated temperature instruments, with a maximum tolerance of (±) 5° . ____

   a. **IF** the S/G secondary temperature is less than 85° F, **THEN ENSURE** S/G primary and secondary pressure is less than 185 PSIG hourly **PER** TVR 15.7.1.1.

6.16.D FILL THE RCS SOLID AND DRAW PRESSURIZER BUBBLE (Continued) **INITIALS**

5. **IF** the temporary Pressurizer vent rig is **NOT** installed, **THEN REQUEST** Mechanical Maintenance to perform the following: ____

   a. **INSTALL** the temporary Pressurizer vent rig (flow gauge and vent valve, 1-RC-277) to the Pressurizer vent line downstream of PZR VENT ISOL, 1-RC-215 and PZR VENT STOP, 1-RC-216.

   b. **INDEPENDENTLY VERIFY** the temporary Pressurizer vent rig installation.

   c. **INITIATE** MN-1-110 Attachment PC tracking.

> **NOTE**
> **IF** Radiation Safety allows entry into the Refueling Pool, **THEN** the temporary tubing should be run to the nearest Refueling Pool cavity drain.

6. **INSTALL** temporary tubing at the following locations:

   - Pressurizer Vent, routed to the Refueling Pool ____
   - Refueling Pool Cavity Drain to the Containment Sump. ____

7. **ENSURE** SDC Purification SECURED **PER** OI-2D, PURIFICATION SYSTEM OPERATION. ____

> **CAUTION**
> When Pressurizer level is less than 90 inches, two Charging pumps shall be tagged out with their breakers racked out and discharge valves shut to limit dilution sources to less than 88 GPM.

8. **ENSURE** CVCS Charging **AND** Letdown are available for operation with:

   - One Charging pump available to be aligned to the RWT
   - At least one loop Charging Stop, 1-CVC-518-CV or 1-CVC-519-CV, OPEN. ____
   - L/D STOP, 1-CVC-515-CV shut ____
   - LD CNTMT ISOL, 1-CVC-516-CV shut ____

6.16.D FILL THE RCS SOLID AND DRAW PRESSURIZER BUBBLE (Continued) **INITIALS**

9. **UNISOLATE AND PLACE IN SERVICE BOTH** Letdown Control valves and Backpressure Regulating valves as follows:

   a. **ENSURE SHUT BOTH** LETDOWN LINE CONTR ISOL valves:

      - L/D STOP.....1-CVC-515-CV ____
      - LD CNTMT ISOL.....1-CVC-516-CV ____

   b. **ENSURE OPEN** L/D CV INLET valves:

      - (1-CVC-110P-CV) L/D CV INLET.....1-CVC-105 ____
      - (1-CVC-110Q-CV) L/D CV INLET.....1-CVC-103 ____

   c. **ENSURE OPEN** L/D CV OUTLET valves:

      - (1-CVC-110P-CV) L/D CV OUTLET.....1-CVC-106 ____
      - (1-CVC-110Q-CV) L/D CV OUTLET.....1-CVC-104 ____

   d. **ENSURE OPEN** BP REG INLET valves:

      - (1-CVC-201P-CV) BP REG INLET.....1-CVC-108 ____
      - (1-CVC-201Q-CV) BP REG INLET.....1-CVC-110 ____

   e. **ENSURE OPEN** BP REG OUTLET valves:

      - (1-CVC-201P-CV) BP REG OUTLET.....1-CVC-109 ____
      - (1-CVC-201Q-CV) BP REG OUTLET.....1-CVC-111 ____

   f. **PLACE** L/D CONTR VLVS Selector Switch, 1-HS-110-1, in BOTH. ____

   g. **PLACE** BACKPRESSURE REG VLVS selector switch, 1-HS-201, in BOTH. ____

   h. **PLACE** L/D PRESS controller, 1-PIC-201, in AUTO with a setpoint of 100 PSIG. ____

   i. ADJUST L/D THROTTLE VLV controller 1-HIC-110 in MANUAL to obtain 100% output, to open Letdown Control valves to their open limit. ____

6.16.D FILL THE RCS SOLID AND DRAW PRESSURIZER BUBBLE (Continued) **INITIALS**

> **NOTE**
> The Pressurizer Heaters are **NOT** tagged out for solid water operations here because they are needed to draw the Pressurizer bubble.

10. **IMPLEMENT** the following solid water controls: **[B0064]**

    a. **ENSURE ALL** Pressurizer Heaters in OFF. ____

    b. **TAGOUT** the RCPs by **ONE** of the following methods: ____

    - **BOTH** feeder breakers 252-1201 and 252-2202 racked out
    - **ALL** eight RCP breakers racked out

    c. **ENSURE BOTH** PORVs operable with **ALL** of the following conditions:

    - STPs M-572A, M-572B and M-672B current ____
    - **BOTH** PORV handswitches in SINGLE MPT ENABLE:
      - PORV 402 MPT PROTECTION....1-HS-1406 ____
      - PORV 404 MPT PROTECTION....1-HS-1408 ____
    - **BOTH** PORV Override Shut/Auto handswitches in AUTO:
      - PORV 402 OVERRIDE....1-HS-1402 ____
      - PORV 404 OVERRIDE....1-HS-1404 ____

    d. **ENSURE BOTH** PORV Block Valves are fully open. ____

    e. **ENSURE** two Charging pumps have their breakers racked out and tagged: ____

    - 11 Charging pump.....52-1115
    - 12 Charging pump.....52-1415
    - 13 Charging pump....52-1104 **AND** 52-1404

6.16.D.10 FILL THE RCS SOLID AND DRAW PRESSURIZER BUBBLE (Continued) **INITIALS**

f. **ISOLATE** HPSI pumps by **ONE** of the following methods: ____

(1) **RACK OUT AND DANGER TAG ALL** four HPSI pump breakers **PER** OI-27C, 4.16 KV SYSTEM:

- 11 HPSI pump.....152-1108
- 12 HPSI pump.....152-1408
- 13 HPSI pump.....152-1110
- 13 HPSI pump.....152-1410

OR

(2) The following valves will be CAUTION Tagged shut **AND** their breakers open (where applicable)

(a) **LOCK SHUT AND TAG ALL** three HPSI pump manual discharge valves:

- 11 HPSI PP DISCH ISOL...1-SI-428
- 12 HPSI PP DISCH ISOL...1-SI-415
- 13 HPSI PP DISCH ISOL...1-SI-406

OR

(b) **ALL** eight MAIN and AUX HPSI Loop Isolation valves:

HPSI MAIN HDR	HPSI AUX HDR
1-SI-616-MOV	1-SI-617-MOV
1-SI-626-MOV	1-SI-627-MOV
1-SI-636-MOV	1-SI-637-MOV
1-SI-646-MOV	1-SI-647-MOV

OR

(c) **BOTH** MAIN and AUX HPSI Header Isolation valves:

HPSI MAIN HDR ISOL	HPSI AUX HDR ISOL
1-SI-654-MOV	1-SI-656-MOV

11. **TERMINATE** operational testing of Safety Injection and CVCS components until normal water level is established in the Pressurizer. **[B0064]** ____

12. **CHECK** the following actions complete PRIOR to continuing:

- The temporary Pressurizer vent rig is installed ____
- E&C has completed venting and placing the Pressurizer Level Transmitters in service ____

6.16.D FILL THE RCS SOLID AND DRAW PRESSURIZER BUBBLE (Continued) **INITIALS**

NOTE

- This section requires operator actions inside Containment to:
  - Vent the Reactor Vessel
  - Vent the Pressurizer
  - Isolate Reactor Vessel level instrumentation (if needed)
  - Fill the SITs (if needed)
- Advanced determination of the drain path to be used when drawing a bubble minimizes the TIME the RCS is in a solid water condition.

13. **DETERMINE** the drain path to be used when drawing the Pressurizer bubble, as follows: (check one) ____

☐ **IF BOTH** of the following conditions exist, **THEN DRAIN** to the RWT (preferred path):

- At least 10 inches RWT capacity exists ____
- RCS boron concentration is such that final RWT boron concentration will be between 2450 PPM and 2700 PPM, as determined by APPENDIX 4, CALCULATION OF FINAL RWT CONCENTRATION FOR RCS DRAIN. ____

☐ **IF** the RWT is **NOT** available, **THEN DRAIN** to RCW (alternate path).

6.16.D FILL THE RCS SOLID AND DRAW PRESSURIZER BUBBLE (Continued) **INITIALS**

CAUTION
RCS level will lower slightly during the performance of step 14.

14. **PERFORM** the following to **ENSURE OPEN BOTH** MINI FLOW RETURN TO RWT ISOL valves: **[B1250]**

    a. **ENSURE OPEN** MINI FLOW RETURN TO RWT ISOL, 1-SI-659-MOV. ____

    b. **ENSURE OPEN** MINI FLOW RETURN TO RWT ISOL, 1-SI-660-MOV. ____

    c. **VERIFY** at least 42 GPM mini flow indicated on the digital flow meter located in 12 ECCS Pump Room by **SLOWLY THROTTLING OPEN** the running LPSI pump mini flow:

    - 11 LPSI PP MINI FLOW RTN ISOL, 1-SI-449 ____

    OR

    - 12 LPSI PP MINI FLOW RTN ISOL, 1-SI-450 ____

    d. **SHUT** the selected LPSI pump mini flow:

    - 11 LPSI PP MINI FLOW RTN ISOL, 1-SI-449 ____

    OR

    - 12 LPSI PP MINI FLOW RTN ISOL, 1-SI-450 ____

NOTE
Locked valves, controlled under NO-1-205.

15. **ENSURE OPEN** 11 RWT OUT on the selected LPSI pump that will be used to fill the RCS:

    - (11 LPSI pump) 11 RWT OUT, 1-SI-4142-MOV ____
    - (12 LPSI pump) 11 RWT OUT, 1-SI-4143-MOV ____

6.16.D FILL THE RCS SOLID AND DRAW PRESSURIZER BUBBLE (Continued) **INITIALS**

CAUTION
Portable radio usage in Containment shall be in accordance with NO-1-113.

16. **DISPATCH** an operator into Containment, with communications available with the Control Room, in preparation for Pressurizer venting operations. ____

17. **NOTIFY** Radiation Safety Supervision of the following: ____

    - Drawing a bubble in the Pressurizer.
    - Drain path to be used.
    - Pending venting operations.

WARNING
Opening RCS vents could raise airborne contamination levels. **ALL** vented fluids shall be treated as radioactive unless certified clean by Chemistry.

18. **VERIFY OPEN** the following Pressurizer Vent valves:

    - PZR VENT ISOL, 1-RC-215 ____
    - PZR VENT STOP, 1-RC-216 ____
    - PZR VENT THROT, 1-RC-277 ____

6.16.D FILL THE RCS SOLID AND DRAW PRESSURIZER BUBBLE (Continued) **INITIALS**

NOTE

- Locked valves, controlled under NO-1-205.
- The top of the Pressurizer and a full RWT are at approximately the same elevation. The LPSI fill rate should be expected to change as RCS level rises. Pressurizzer vent capacity may also affect LPSI fill rate.
- Pressurizer level shall be monitored using one set of the following level indicators: (L110X! and L110Y! will indicate .0000 U when level is greater than 360 inches)
  - 1-LI-103 and Computer point L110X!

  OR
  - 1-LI-103 and Computer point L110Y!
- RCS cooldown rate shall be monitored using the CETs on the Trend Recorder. SDC to RCS temperature on 1-TR-351 is lower than RCS temperature due to the relatively cold RWT water used to fill the RCS.

CAUTION

- Do **NOT** exceed the following RCS cooldown rates:

RCS Temperature	Maximum Cooldown Rate
Greater than 256° F	100° F per hour
256° F to 106° F	40° F per hour
Less than 106° F	35° F per hour

- To prevent cooling the Reactor Vessel below 70° F and S/Gs below 85° F, CET temperatures must be maintained above 95° F.

19. While monitoring RCS temperature, initiate RCS fill by **THROTTLING OPEN** the selected LPSI pump normal suction valve:
    - 11 LPSI PP NORMAL SUCT ISOL, 1-SI-444 ____
    - 12 LPSI PP NORMAL SUCT ISOL, 1-SI-432 ____
20. **ADJUST** SDC TEMP CONTR, 1-HIC-3657, as necessary to maintain RCS temperature between 95° F and 150° F. ____

6.16.D FILL THE RCS SOLID AND DRAW PRESSURIZER BUBBLE (Continued) **INITIALS**

CAUTION
If the PORVs open due to overpressure, they will remain open. The cause of the overpressure condition should be determined and corrected before shutting the PORVs.

21. **START BOTH** Pressurizer House Ventilation Fans.

    - 11 PZR VENT FAN, 1-HS-6543 (27' SWGR RM) ____
    - 12 PZR VENT FAN, 1-HS-6544 (45' E PEN RM) ____

22. **START** the selected Charging Pump **PER** OI-2A, Section titled RUNNING A CHARGING PUMP IN MODE 5 OR 6, aligned to the RWT. ____

CAUTION
PORVs which open due to overpressure, will remain open. The cause of the overpressure condition should be determined and corrected before shutting the PORVs.

NOTE
The dedicated operator is not required to be stationed when maintaining PZR level constant at <300" in the PZR.

23. Prior to exceeding 170 inches in the pressurizer, **STATION** a dedicated licensed operator as the solid water overpressurization watch with the following duties: **[B0593]** ____

    - **MONITOR** the following:

      - RCS pressure
      - Pressurizer level
      - Pressurizer heaters
      - Letdown flow
      - Charging pump operation

    - **TAKE** necessary corrective actions to prevent overpressurization of the RCS.

6.16.D FILL THE RCS SOLID AND DRAW PRESSURIZER BUBBLE (Continued) **INITIALS**

24. **WHEN** Pressurizer level reaches 150 inches, **THEN PERFORM** the following while continuing to fill the RCS:

    a. **OPEN BOTH** LETDOWN LINE CONTR ISOL valves:

    - L/D STOP, 1-CVC-515-CV ____
    - LD CNTMT ISOL, 1-CVC-516-CV ____

    b. **MAKE** the following log entries in the Transient Tracking Log: ____

    - Initiation of Pressurizer/RCS heatup
    - Letdown initiation

    c. **COMMENCE** recording Pressurizer Heatup data in APPENDIX 2, PRESSURIZER HEATUP LOG. ____

    d. **PLACE** PZR PRESS CONTR 1-PIC-100X and 1-PIC-100Y in AUTO with a setpoint of 2250 PSIA. ____

CAUTION

- Do **NOT** exceed the following RCS heatup rates:

RCS Temperature	Maximum Heatup Rate
70° F to 246° F	80° F per hour
Greater than 246° F	100° F per hour

- Do **NOT** exceed a Pressurizer linear heatup rate of 100 ° F per hour
- Do **NOT** exceed a Pressurizer temperature of 180 ° F prior to being filled solid.

    e. **ENERGIZE** Pressurizer Backup and Proportional Heaters in AUTO as necessary to maintain Pressurizer Heatup rate less than 100° F per hour **AND** non-solid temperature less than 180° F. ____

6.16.D.24 FILL THE RCS SOLID AND DRAW PRESSURIZER BUBBLE (Continued) **INITIALS**

CAUTION
To prevent draining the RCS through the instrument loop, the RCS Wide Range Level Monitoring System shall be isolated before Pressurizer level reaches 229 inches (68 ft. elevation).

f. **SECURE** the RCS Wide Range Level Monitoring System **AND** Refueling Level Panel as follows:

(1) **SHUT** REFUEL LVL IND ISOL, 1-RC-105 ____

(2) **SHUT** REFUEL LVL IND STOP, 1-RC-106 ____

(3) **SHUT** ROOT ISOL FOR LE-4139 & LG-4139, 1-RC-1427. ____

(4) **SHUT** B/U ISOL FOR LE-4139 & LG-4139, 1-RC-1428. ____

(5) **VERIFY** the pipe cap is removed **AND OPEN** HDR VENT ISOL LG-4139 & LE-4139, 1-RC-1432. **[B0132]** ____

(6) **SHUT** ISOL FOR 1-LT-4140, 1-RC-1236.

(7) **IF** RCS level in the sightglass is greater than the 63 ft elevation,
THEN DRAIN the sightglass using LT-4140 DRAIN, 1-RC-1237 to a desired level below the 63 ft elevation to ensure thermal expansion of water in sightglass does not overflow the vent.

(8) **ENSURE SHUT** LT-4140 DRAIN, 1-RC-1237.

(9) **SHUT** ISOL FOR 1-LT-4140, 1-RC-1235.

NOTE
This step may be performed concurrently with the remainder of this section.

(10) **DE-ENERGIZE** the RCS Level Monitoring Systems by placing 1CS4138 **AND** 1CS4139 in OFF. (located in the Cable Spreading Room on the east wall, just inside the door) ____

NOTE
This step may be performed concurrently with the remainder of this section.

(11) **REQUEST** IM Shop to remove the Refueling Level Cart. ____

6.16.D.24 FILL THE RCS SOLID AND DRAW PRESSURIZER BUBBLE (Continued) **INITIALS**

g. **IF** the local Reactor Vessel level indicator tygon tube is in service, **THEN REMOVE** it from service as follows:

(1) **SHUT** LOCAL REFUEL LVL ISOL, 1-RC-1238. ____

(2) **CONTACT** IM to remove **AND** stow the tygon tube. ____

NOTE
Locked valves, controlled under NO-1-205.

CAUTION
The LPSI PP normal suction valves must be shut before the RCS approaches solid to prevent overpressurizing the suction piping.

25. **WHEN** desired to secure the fill via the LPSI normal suction valve, **OR** Pressurizer level reaches 350 inches, **THEN LOCK SHUT** the LPSI PP normal suction valve used to fill the RCS:

- 11 LPSI PP NORMAL SUCT ISOL, 1-SI-444 ____
- 12 LPSI PP NORMAL SUCT ISOL, 1-SI-432 ____

NOTE
The RCS is now being filled to a solid water condition. To minimize the time the RCS is in a solid water condition, it is desirable to continue heatup of the Pressurizer and draw a bubble once the RCS is filled.

26. **WHEN** a steady stream of air-free water issues from the Pressurizer vents, **THEN SHUT** the Pressurizer Vent valves:

- PZR VENT ISOL, 1-RC-215 ____
- PZR VENT STOP, 1-RC-216 ____
- PZR VENT THROT, 1-RC-277 (temporary valve) ____

27. **ENSURE** RCS pressure maintained approximately 100 PSIG by L/D PRESS controller, 1-PIC-201. ____

6.16.D FILL THE RCS SOLID AND DRAW PRESSURIZER BUBBLE (Continued) **INITIALS**

CAUTION
To prolong RCP seal life, CBO flow should be aligned to the VCT as soon as RCS pressure is greater than VCT pressure.

28. **WHEN** RCS pressure is greater than VCT pressure, **THEN OPEN** the RCP CBO Isolation valves:

    - RCP BLEED CNTMT ISOL, 1-CVC-505-CV ____
    - RCP BLEED CNTMT ISOL, 1-CVC-506-CV ____

29. **WHEN** VCT level is greater than 88 inches, **THEN SHIFT** the Charging Pump suction to the VCT:

    a. **OPEN** VCT OUT, 1-CVC-501-MOV ____

    b. **SHUT** RWT CHG PP SUCT, 1-CVC-504-MOV ____

30. **REQUEST** Mechanical Maintenance perform the following while continuing with this procedure. ____

    a. **REMOVE** the temporary Pressurizer vent rig (flow gauge and vent valve, 1-RC-277) to the Pressurizer vent line downstream of PZR VENT ISOL, 1-RC-215 and PZR VENT STOP, 1-RC-216.

    b. **INSTALL** the blank flange on the Pressurizer vent line downstream of PZR VENT ISOL, 1-RC-215 and PZR VENT STOP, 1-RC-216.

    c. **INDEPENDENTLY VERIFY** the temporary Pressurizer vent rig is removed **AND** the vent line flanged off.

    d. **CLOSE OUT** the MN-1-110 Attachment PC form.

6.16.D FILL THE RCS SOLID AND DRAW PRESSURIZER BUBBLE (Continued) **INITIALS**

NOTE

- Pressurizer level shall be monitored using one set of the following level indicators: (L110X! and L110Y! will indicate .0000 U when level is greater than 360 inches)
  - 1-LI-103 and computer point L110X!

  OR
  - 1-LI-103 and Computer point L110Y!

- After an outage where RCS level was lowered below the top of the Hot Leg (which drains the S/G tubes) the Pressurizer bubble will form during Pressurizer heatup instead of when draining the RCS. Thermal expansion displaces water from the Pressurizer into the S/G tubes, limiting the pressure rise, resulting in the Pressurizer reaching a saturated condition. This will occur to a lesser extent after vacuum fill due to the remaining air pocket in the SG tubes after the partial vacuum.

31. **MONITOR** for spontaneous Pressurizer bubble formation, while Pressurizer temperature is raised, as indicated by the following parameters: ____

    - Pressurizer level decreasing with steady or increasing pressure
    - Pressurizer temperature corresponds to saturation temperature for Pressurizer pressure

32. **ENERGIZE** Backup and Proportional Heaters in AUTO as necessary to maintain Pressurizer Heatup rate less than 100° F per hour **AND COMMENCE** heat up to establish Pressurizer pressure between 100 PSIA and 195 PSIA. ____

    - **RECORD** Pressurizer heatup data in APPENDIX 2, PRESSURIZER HEATUP LOG. ____

33. **WHEN** Pressurizer temperature reaches 300° F (approximately 70 PSIA saturation), **THEN STOP** the running Charging Pump **AND PLACE** in PULL TO LOCK. ____

NOTE

The VCT is made a closed system with CBO initiated and Charging secured. Overpressurization of the VCT is possible in this configuration.

34. **COMMENCE** monitoring VCT level and pressure. ____

    - **IF** required to lower VCT pressure, **THEN VENT** the VCT **PER** OI-2A, CHEMICAL AND VOLUME CONTROL SYSTEM.

    - **IF** required to lower VCT level, **THEN DRAIN** the VCT to RCW by cycling VCT DRN, 1-CVC-161.

6.16.D FILL THE RCS SOLID AND DRAW PRESSURIZER BUBBLE (Continued) **INITIALS**

35. **REQUEST** Plant Chemistry obtain an RCS boron sample. **[B0605]** ____

> **CAUTION**
> During the formation of the Pressurizer bubble, a large quantity of relatively hot water will enter the RCS from the Pressurizer when the RCS is drained. This may require adjusting SDC temperature to maintain RCS temperature less than 200° F.

36. **COMMENCE** continuous monitoring of Pressurizer pressure and level (1-LI-103 and Computer point L110X!, **OR** 1-LI-103 and Computer point L110Y!), **AND** RCS temperature. (L110X! and L110Y! will indicate .0000 U when level is greater than 360 inches) ____

> **CAUTION**
> Excessive drain rates may exceed Pressurizer Heater capacity to maintain Pressurizer pressure.

37. **COMMENCE** draining the RCS, using the pre-determined flowpath, as follows: ____

    a. **MAINTAIN** Pressurizer pressure: ____

    - Greater than 70 PSIA
    - Less than 195 PSIA

    b. **IF** draining to the RWT via the LPSI pump Miniflow, **THEN**:

    (1) **NOTIFY** Radiation Safety Supervision that the RCS will be drained to the RWT. ____

> **NOTE**
> Locked valves, controlled under NO-1-205.

    (2) **OPEN** the running LPSI pump Miniflow Isolation: ____

    - 11 LPSI PP MINI FLOW RTN ISOL, 1-SI-449
    - 12 LPSI PP MINI FLOW RTN ISOL, 1-SI-450

6.16.D.37.b **FILL THE RCS SOLID AND DRAW PRESSURIZER BUBBLE (Continued)** **INITIALS**

> **NOTE**
> Locked valves, controlled under NO-1-205.

(3) **IF** desired to raise the drain rate, **THEN OPEN ONE** of the following valves: ____

- 12 SDC HX TO HPSI SUCT, 1-SI-662-MOV
- 11 SDC HX TO HPSI SUCT, 1-SI-663-MOV

(4) **MONITOR** RWT level change. ____

c. **IF** draining to the RWT via SI LKG TO RWT ISOL, 1-SI-459, **THEN**:

(1) **NOTIFY** Radiation Safety Supervision that the RCS will be drained to the RWT. ____

> **NOTE**
> Locked valves, controlled under NO-1-205.

(2) **OPEN** SDC HX OUT RTN TO RWT ISOL, 1-SI-460. ____

> **NOTE**
> Locked valves, controlled under NO-1-205.

(3) **THROTTLE OPEN** SI LKG TO RWT ISOL, 1-SI-459. ____

(4) **MONITOR** RWT level change. ____

d. **IF** draining to RCW, **THEN**:

(1) **DIVERT** Letdown flow to RCW by placing 1-HS-2500 for 1-CVC-500-CV in WPS. ____

(2) **PLACE** L/D PRESS controller, 1-PIC-201, in MANUAL. ____

(3) **ADJUST** 1-PIC-201 in MANUAL to obtain 100% output, to fully open **BOTH** Backpressure Regulating valves. ____

(4) **RESET** Diversion Flow Integrator, 1-FQI-2540 **OR MONITOR** RC Waste Receiver Tank level change. ____

38. **ADJUST** SDC TEMP CONTR, 1-HIC-3657, as necessary to maintain RCS temperature below 200° F. ____

6.16.D FILL THE RCS SOLID AND DRAW PRESSURIZER BUBBLE (Continued) **INITIALS**

NOTE
Pressurizer level instruments read to 360 inches. Pressurizer volume for draining from solid at 404 inches to 350 inches, when the level instruments are on scale, is approximately 1620 gallons. This equates to approximately 1.9 inch RWT level change and 0.75 feet RC Waste Receiver Tank level change.

39. **IF** any of the following occur **AND** pressurizer level indicates no change:

- 30 minutes of draining
- RWT level rises by 1.9 inch
- in service RC Waste Receiver Tank rises by 0.75 feet.
- CVCS Flow Diversion Integrator, 1-FQI-2540, indicates 1620 gallons have been drained from the Pressurizer

THEN PERFORM the following:

a. **SECURE** the drain by shutting the valves opened to initiate the drain: ____

- 11 LPSI PP MINI FLOW RTN ISOL, 1-SI-449
- 12 LPSI PP MINI FLOW RTN ISOL, 1-SI-450
- 12 SDC HX TO HPSI SUCT, 1-SI-662-MOV
- 11 SDC HX TO HPSI SUCT, 1-SI-663-MOV
- SI LKG TO RWT ISOL, 1-SI-459
- SDC HX OUT RTN TO RWT ISOL, 1-SI-460

b. **PLACE** L/D PRESS controller, 1-PIC-201, in AUTO with a setpoint of 150 PSIG. ____

c. **UTILIZE** Pressurizer Heaters to maintain Pressurizer pressure between 50 and 150 PSIA. ____

d. **INVESTIGATE** the cause of no change in level, including, **BUT NOT** limited to: ____

- Instrumentation malfunction: compare indicated level to Reactor Vessel level to determine need to refill the RCS
- Valve misalignment in drain path

e. **WHEN** corrective actions are complete **AND** it is desired to continue with drawing the bubble,
THEN RE-INITIATE draining **PER** this section.

- **IF** re-initiating drain to RCW,
  THEN LOG Letdown initiation in the Transient Tracking Log.

6.16.D FILL THE RCS SOLID AND DRAW PRESSURIZER BUBBLE (Continued) **INITIALS**

40. **CHECK** Pressurizer bubble established by the following parameters: ____

    - Pressurizer level lowering with steady or rising pressure
    - Pressurizer temperature corresponds to saturation temperature for Pressurizer pressure

41. **WHEN** the formation of the bubble has been verified, **THEN CONTINUE** draining to lower Pressurizer level to 144 inches (1-LI-103 and Computer point L110X! **OR** 1-LI-103 and Computer point L110Y!). ____

42. **CYCLE** Pressurizer Heaters to maintain Pressurizer pressure between 100 PSIA and 195 PSIA **AND** Pressurizer temperature at least 30° F above the highest RCS loop temperature. ____

43. **STABILIZE** Pressurizer level at 144 inches (1-LI-103 and Computer point L110X! **OR** 1-LI-103 and Computer point L110Y!) as follows:

> **NOTE**
> Locked valves, controlled under NO-1-205.

a. **IF** draining to the RWT via the LPSI pump Miniflow, **THEN SHUT** the running LPSI pump Miniflow Isolation: ____

    - 11 LPSI PP MINI FLOW RTN ISOL, 1-SI-449
    - 12 LPSI PP MINI FLOW RTN ISOL, 1-SI-450
    - **IF** the following valves were opened, **THEN SHUT**: ____

        - 12 SDC HX TO HPSI SUCT, 1-SI-662-MOV
        - 11 SDC HX TO HPSI SUCT, 1-SI-663-MOV

> **NOTE**
> Locked valves, controlled under NO-1-205.

b. **IF** draining to the RWT via SI LKG TO RWT ISOL, 1-SI-459, **THEN SHUT**: ____

    - SI LKG TO RWT ISOL, 1-SI-459
    - SDC HX OUT RTN TO RWT ISOL, 1-SI-460

c. **IF** draining to RCW, **THEN DIRECT** Letdown flow to the VCT by placing 1-HS-2500 for 1-CVC-500-CV in AUTO. ____

6.16.D.43 FILL THE RCS SOLID AND DRAW PRESSURIZER BUBBLE (Continued) **INITIALS**

d. **ENSURE** the B/U CHG PP SEL switch, 1-HS-224, is selected to a position that does **NOT** have the available CHG PP listed. ____

e. **START** the available CHG PP. ____

f. **ENSURE** L/D PRESS controller, 1-PIC-201, in MANUAL. ____

g. **ADJUST** 1-PIC-201 output to balance Charging and Letdown to maintain Pressurizer level at 144 inches. ____

h. **LOG** initiation of Charging and Letdown in the Transient Tracking Log. ____

44. **OBSERVE** the indication on the selected PZR LVL CONTR CH, 1-LIC-110X **OR** 1-LIC-110Y, that corresponds with a reading of 144 inches on 1-LI-103, **OR** Computer points L110X! **OR** L110Y!. ____

45. **ADJUST** the local setpoint on the selected PZR LVL CONTR CH, 1-LIC-110X **OR** 1-LIC-110Y, to match the level observed above, **AND PLACE** it in AUTO. ____

46. **PLACE** L/D THROTTLE VLV controller, 1-HIC-110, in AUTO. ____

47. **ADJUST** 1-PIC-201 to maintain approximately 100 PSIG backpressure **AND** a Pressurizer level of 144 inches. ____

a. **IF** desired,
THEN PLACE 1-PIC-201 in AUTO.

6.16.D FILL THE RCS SOLID AND DRAW PRESSURIZER BUBBLE (Continued) **INITIALS**

48. **IF** the Pressurizer was drained to the RWT, **THEN PERFORM** the following:

    a. **IF** the RCS boron concentration was **NOT** within 10 PPM of the RWT boron concentration, **THEN INITIATE** recirculation of the RWT using the SFP Cooling pump, **PER** OI-24E, RECIRCULATION OF REFUELING WATER TANKS. **[B0029]** ____

    b. **IF** the RCS boron concentration **WAS** within 10 PPM of the RWT boron concentration, **THEN INITIATE** recirculation of the RWT using the RWT Recirc pump **OR** the SFP Cooling pump, **PER** OI-24E, RECIRCULATION OF REFUELING WATER TANKS. ____

> **NOTE**
> A 2 volume recirc of a full RWT will take 9 hours using a SFP pump **OR** 24 hours using the RWT Recirc pump.

    c. **NOTIFY** Chemistry that a 2 volume recirc of the RWT has been started **AND** to obtain and analyze an RWT sample for boron concentration when the 2 volume recirc is complete. ____

****** END ******

6.16 VACUUM FILL [B1143] (Continued) **INITIALS**

E. MAINTAIN RCS

> **NOTE**
> Steps in this section may be performed concurrently and in any order.

1. **CLEAR** the solid water tagouts. ____

2. **COMMENCE** monitoring VCT level **AND** DIVERT Letdown to RCW to maintain level as necessary. ____

3. **IF** necessary to raise S/G temperatures, **THEN CONSIDER** using 2 LPSI pump operation on SDC. ____

4. **PRESSURIZE** the Quench Tank for plant Normal Operation **PER** OI-1B, QUENCH TANK OPERATIONS, SECTION 6.1, ADDING DI OR N2 TO THE QT. ____

5. **VENT** the Regenerative Heat Exchanger as follows:

   a. **NOTIFY** Radiation Safety Supervision of pending venting operation. ____

   b. **INSTALL** temporary tubing at the Regenerative Heat Exchanger Vent, routed to the Containment Normal Sump. ____

   c. **SHUT** REGEN HX SHELL VENT THROTTLE, 1-CVC-398 ____

   d. **UNLOCK AND OPEN** REGEN HX SHELL VENT, 1-CVC-102. ____

   e. **UNLOCK AND OPEN** REGEN HX SHELL VENT B/U, 1-CVC-192. ____

   f. **THROTTLE OPEN** 1-CVC-398. ____

   g. **WHEN** air-free water is observed in 1-FG-229A, **THEN LOCK SHUT**:

      - 1-CVC-102 ____
      - 1-CVC-192 ____

   h. **FULLY OPEN** 1-CVC-398. ____

   i. **REMOVE AND STOW** the temporary tubing. ____

6.16.E MAINTAIN RCS (Continued) **INITIALS**

6. **VENT** the Hot Leg Sample line as follows:

   a. **REQUEST** Chemistry to ensure the Primary Sample Sink aligned for sampling. ____

   b. **WHEN** the sample sink is aligned, **THEN OPEN** RCS SAMPLE ISOL, 1-PS-5464-CV. ____

   c. **OPEN** RCS HOT LEG SAMPLE, 1-PS-5467-CV, for approximately two minutes. (1C90) ____

   d. **SHUT** 1-PS-5467-CV. ____

   e. **SHUT** 1-PS-5464-CV. ____

7. **ALIGN** Charging and RCMU pumps as follows:

   a. **IF** tagged shut for draining of the RCS during the outage, **THEN UNTAG AND OPEN** Charging pump discharge valves: ____

      - 11 CHG PP DISCH.....1-CVC-166
      - 12 CHG PP DISCH.....1-CVC-172
      - 13 CHG PP DISCH ISOL.....1-CVC-178

   b. **IF** tagged shut for draining of the RCS during the outage, **THEN UNTAG AND OPEN** RCMU pump discharge valves: ____

      - 11 RCMU PP DISCH.....1-CVC-245
      - 12 RCMU PP DISCH.....1-CVC-248

   c. **UNTAG AND RACK IN** Charging pump breakers, **PER** OI-27D, STATION POWER 480 VOLT SYSTEM: ____

      - 11 Charging pump.....52-1115
      - 12 Charging pump.....52-1415
      - 13 Charging pump...52-1104 **AND** 52-1404

   d. **IF** tagged open for draining of the RCS during the outage, **THEN UNTAG AND CLOSE** RCMU pump breakers: ____

      - 11 RCMU pump.....52-10505
      - 12 RCMU pump.....52-11505

   e. **PLACE** CHG PPs and RCMU PPs in AUTO/NORMAL. ____

6.16.E MAINTAIN RCS (Continued) **INITIALS**

8. **IF** the plant is to remain in Mode 5,
THEN PERFORM the following:

   a. **VERIFY** the RCP LTOP tagout is still hanging while continuing with this section. **[B0064]** ____

> **CAUTION**
> While in Mode 5, RCS pressure should be maintained at the lower end of the allowable range to minimize the chance of small pressure transients causing a loss of SDC, unless otherwise specified for surveillance testing.

   b. **LOWER AND MAINTAIN** Pressurizer pressure between 100 PSIA and 200 PSIA by **ONE** of the following methods: ____

      - **PER** OI-1H, PRESSURIZER PRESSURE CONTROL, Section on LOW PRESSURE PRESSURIZER CONTROL (preferred method)
      - Cycling Pressurizer Heaters

****** END ******

7.0 POST PERFORMANCE ACTIVITIES

A. Upon completion of this procedure, perform the following:

- Forward the original to the Operations Senior Administrative Assistant for retention **PER** CNG-PR-3.01-1000, RECORDS MANAGEMENT.
- Attach copies of the RCS and Pressurizer Heatup **AND** Cooldown Logs to the Transient Tracking Log (Ref. EN-1-115)

8.0 BASES

[B0014] Establishes requirement to have one Containment IRU available before core alterations start.

[B0015] Delineates criteria for determining S/G availability.

[B0026] Response to NRC Information Notice 90-06 and SER 4-89, which establish requirement to throttle LPSI header valves to prevent SDC flow excursion should 1-SI-306-CV fail open on a loss of instrument air.

[B0028] Engineering calculation that limits Pressurizer cooldown rate to 200° F/hour.

[B0029] Requires that the SFP Cooling pump be used to recirc the RWT if there is a differential between the boron concentration of the RWT and the influent, in order to prevent stratification of RWT contents and inaccurate sample.

[B0038] MOV project recommendations for jogging MOVs.

[B0064] LTOP requirements.

[B0072] Response to SOER 88-03, establishes guidelines on reduced inventory operations and establishing safe working conditions around RCS openings.

[B0073] Response to Generic Letter 88-17 for reduced inventory operations.

[B0076] Response to NRC Inspection Notice 90-23, establishes requirement to vent the Reactor Vessel using manual valves.

[B0079] Establishes requirements for re-installing Pressurizer manway.

[B0089] Establishes requirement for having one train of Containment Coolers, tagging out Containment closure valves and time limits before opening the RCS for maintenance.

[B0105] **PER** LER 91-007 , "Loss of Boration Flowpath due to a Fuse Failure", this procedure is to be performed when an Emergency Diesel Generator is to be taken out of service and at least once every 8 hours while it remains out of service.

[B0116] Establishes requirements for RCS heat removal capabilities during partial drain down conditions.

8.0 BASES (Continued)

[B0132] Results of ETP indicate that RCS level indication will be conservative when draining the RCS less then the 51 foot elevation and that 1-RC-1432 will remain open to provide thermal relief protection for the GEMS sight glass.

[B0138] NUMARC 91-06 "GUIDELINES FOR INDUSTRY ACTIONS TO ASSESS SHUTDOWN MANAGEMENT":

- Requires that criticality be anticipated whenever dilution, heatup or CEA withdrawals are occurring, based on industry events
- Requires that controls be established to preclude loss of RCS inventory

[B0145] Establishes RCS gravity feed guidelines for station blackout.

[B0247] 50.59 log# 95-0010-R00, changed the definition for going into Mode 6 from Mode 5. Mode 6 is now declared prior to detensioning the last 18 reactor vessel studs less than 75% designed pre-load.

[B0270] Operator Reactivity Management Procedure Review Guidelines. Letter from B. Shick to M. Navin 9-22-95

[B0271] This is in response to SOER 94-02, recommendation 4.a: Identify procedure activities that can result in low concentrated borated water being transported to the RCS.

[B0272] SOER 94-02, The requirement to keep an RCP running and PZR spray in operation while doing any RCS boration or dilution is to assure adequate RCS mixing to prevent diluted pockets. However, plant conditions are such that it is not always possible to assure that RCPs are running. In these cases it is possible to minimize the probability of diluted pockets during Natural Circulation cooldown or during SDC operation.

[B0328] Added new requirements to be in effect while in a reduced inventory condition. Requirements are based on lessons learned from past reduced inventory evolutions regarding control of work during reduced inventory (Memo from K. Nietmann 5-3-96) and contingency plan and safety shutdown barricades (Memo from D. Holm 5-2-96)

[B0368] RCAR 96-10, recommended PTU augment the vibration monitoring for all normal RCP starts. (i.e. starting RCPs for heatup, sweeping S/Gs...)

[B0370] The reactor must be shutdown at least 72 hours prior to installing S/G nozzle dams to ensure that the time until core uncovery is equal to or greater than the max time needed to align the OC DG (one hour).

[B0381] Response to SOER 91-01, CONDUCT OF INFREQUENTLY PERFORMED TESTS **OR** EVOLUTIONS, Recommendations 1.c & 1.d for providing management control for infrequently performed evolutions.

8.0 BASES (Continued)

[B0407] Required a minimum RFP level of 65' to ensure that sufficient amount of water (at least 96 inches) covers the fuel assemblies when the hoist is raised to the "HOIST UP" position to provide adequate shielding for personnel on the RFM. (FRC 89-3001 & NCR 11162)

[B0198] NFM interpretation of T.S. 3.9.1, NFM 93-158 which states the 100 PPM limit for refueling samples. Includes memo from Regulatory Matters, dated February 20, 2003.

[B0410] NEU (NEU 01-026) provided the maximum allowable temperature that the S/G can be colder than the RCS to prevent exceeding the max allowable cooldown rate.

[B0424] Limits flowrate through the core when defueled and the UGS is installed to 1700 GPM. (Memo B-MPS-89-103, from Combustion Engineering, 9-12-89)

[B0477] ES1999000665-004, SE00431 updated the COLR, Section 3.9.1 to include limiting RFP temperature to less than or equal to 140° F.

[B0593] SOER 94-01 recommendation 2.d. Provide guidance for recovery from water-solid conditions using appropriate reactor and pressurizer level indications.

[B0597] Letter from Charlie Cruse to the NRC Document Control Desk dated 12/4/97, describing the method of Reactor Coolant System level detection. States at least two instruments will be available under all RCS level and flow conditions, when shutdown.

[B0605] Memo from the boronometer removal task force that describes increased RCS boron sampling requirements due to the removal of the boronometer.

[B0630] Steps revised to include required checks for ensuring the Containment Radiation Signal (CRS) is operable for Tech Spec 3.3.7.

[M0002] Establishes requirement to perform page checks of procedures.

[B0771] Memo (G:\PES\0100\0119-300) from Primary Systems dated June 28, 2001, to maintain QT pressure at a lower range when RCS pressure is low to prevent PORV seat leakage.

[B0300] Filling the Cntmt Emergency Sump piping will provide a thermal barrier to prevent valve heat up after an accident and prior to a RAS. The thermal barrier will provide additional margin to the analysis by reducing peak bonnet pressure. Response to GL 95-07, PRESSURE LOCKING/THERMAL BINDING OF SAFETY RELATED MOVs.

[B0720] IR3-082-883 Issue Report Resolution Document. Document states that if a pressure reduction is needed after the vessel and CEDMs are vented, then the vessel head and CEDMs should be re-vented to vent any released gases in the RCS.

8.0 BASES (Continued)

[B1118] Time Estimate to Gravity Fill the Refueling Pool Using the Refueling Water Tank Inventory.

[B1143] DAR-SEE-05-2, Engineering Evaluation of a Reactor Coolant Vacuum Refill System.

[B1147] DE06098 Minimum Recommended Refueling Pool Water Level During CEA Swap.

[B1243] NRC Bulletin 78-08, Post the high radiation area around the Fuel Transfer Tube during irradiated fuel transfer.

[B2172] NEU Memo 91-289, Request for Evaluation of RCS Response to a Station blackout in MODE 5 with a Pressurizer Bubble, October 18, 1991; and NEU 92-040 memo, Request for Budgetary Estimate Regarding Analysis of RCS Response to a Station Blackout in MODE 5 at Calvert Cliffs, January 31, 1992.

[B2250] DE06398, Filling Pressurizer by Containment Spray Pump.

9.0 RECORDS

Records generated by this procedure shall be transferred to Records Management **PER** CNG-PR-3.01-1000, Records Management.

REACTOR COOLANT SYSTEM LEVELS

WARNING
This table should **NOT** be used to establish boundaries for maintenance.

REFERENCE LEVEL	PZR LEVEL	RCS LEVEL	RX V LVL
Top of Pressurizer		81.74 ft.	
Indicated Top of PZR	360 in.	78.90 ft.	
Top of Refueling Pool	241 in.	69.00 ft.	
Normal Refueling Pool Level	217 in.	67.00 ft.	
UGS Deck Plates	193 in.	65.00 ft.	
Thimble Support Plate	145 in.	61.00 ft.	
ICI Installation	97 in.	57.00 ft.	
TS Refueling Pool Level	93.6 in.	56.70 ft.	
Core Support Barrel Lift Rig Install	73 in.	55.00 ft.	
Indicated Bottom of PZR	0 in.	48.90 ft.	
1st RVLMS Alarm		46.49 ft.	160 in.
2nd RVLMS Alarm		45.74 ft.	151 in.

REACTOR COOLANT SYSTEM LEVELS

REFERENCE LEVEL	PZR LEVEL	RCS LEVEL	RX V LVL
Reactor Vessel Flange		43.97 ft.	
Top of UGS		43.77 ft.	
3rd RVLMS Alarm		42.49 ft.	112 in.
Bot of S/G Primary Manway		39.37 ft.	
Top of Hot Leg 4th RVLMS Alarm & RCP Seal Maint level		39.08 ft.	71 in.
S/G Nozzle Dam Installation		37.66 ft.	
Middle of Hot Leg & 5th RVLMS Alarm		37.33 ft.	50 in.
Minimum Level to Drain RCS		36.83 ft.	
Bottom of Hot Leg & 6th RVLMS Alarm		35.58 ft.	29 in.
7th RVLMS Alarm		34.74 ft.	19 in.
Last RVLMS Alarm		33.99 ft.	10 in.
Top of Core		32.90 ft.	

MAJOR RCS OPENINGS

OPENING	AREA PER OPENING (IN^2)	QUANTITY
Pzr Spray valves 1-RC-100E-CV 1-RC-100F-CV	5.41 IN^2 limited by pipe size with valve bonnet pulled	2
PZR Manway	78 IN^2 limited by Surge Line Nozzle size	1
Rx Vessel Head Vent	0.432 IN^2	1
ICI w/out guide cluster	16.73 IN^2	8
ICI with guide cluster	2.54 IN^2	8
PORVs	1.3 IN^2	2
Pzr relief valves 1-RC-200-RV 1-RC-201-RV	3.55 IN^2 with valve completely removed	2
PORV block valves 1-RC-403-MOV 1-RC-405-MOV	2.95 IN^2 with valve completely removed	2
Safety Injection Loop Injection Check valves 1-SI-217, 1-SI-227, 1-SI-237, 1-SI-247	86.59 IN^2 limited by pipe size	4

MAJOR RCS OPENINGS

OPENING	AREA PER OPENING (IN^2)	QUANTITY
Aux Spray Check valve 1-CVC-185	2.23 IN^2 with valve completely removed	1
CHG Inlet Check valve 1-CVC-186, 1-CVC-187	2.23 IN^2 with valve completely removed	2
L/D Isol 1-CVC-397	2.24 IN^2 with valve completely removed	1
RCP Vapor Seal 1-RCW-335	3.34 IN^2 with valve completely removed	1
11 RCDT Hx Bypass 1-RCW-320	3.34 IN^2 with valve completely removed	1
11 RCDT Hx Inlet Isol 1-RCW-316	3.34 IN^2 with valve completely removed	1
Leak Header Relief 1-RCW-4252-RV	3.34 IN^2 with valve completely removed	1
SDC Return Isol 1-SI-652-MOV	86.59 IN^2 with valve completely removed	1

TIME TO START BOILING OR CORE UNCOVERY MULTIPLIER [B0072]

NOTE
Post Refueling, if the core has been reloaded with 84 or more new assemblies, the Multiplier is 1.36 times the following "normal" multiplier. (Use only until new fuel is irradiated)

HOURS AFTER S/D	MULTIPLIER	HOURS AFTER S/D	MULTIPLIER
24 (1 day)	1.00	43	1.19
25	1.01	44	1.20
26	1.02	45	1.20
27	1.03	46	1.21
28	1.04	47	1.22
29	1.05	48 (2 days)	1.23
30	1.06	49	1.24
31	1.07	50	1.25
32	1.08	51	1.25
33	1.09	52	1.26
34	1.10	53	1.27
35	1.11	54	1.28
36	1.12	55	1.28
37	1.13	56	1.29
38	1.14	57	1.30
39	1.15	58	1.30
40	1.16	59	1.31
41	1.17	60	1.32
42	1.18	61	1.33

TIME TO START BOILING OR CORE UNCOVERY MULTIPLIER [B0072]

HOURS AFTER S/D	MULTIPLIER	HOURS AFTER S/D	MULTIPLIER
62	1.33	84	1.48
63	1.34	85	1.49
64	1.35	86	1.49
65	1.35	87	1.50
66	1.36	88	1.51
67	1.37	89	1.51
68	1.37	90	1.52
69	1.38	91	1.53
70	1.39	92	1.53
71	1.39	93	1.54
72 (3 days)	1.40	94	1.55
73	1.41	95	1.55
74	1.41	96 (4 days)	1.56
75	1.42	97	1.57
76	1.43	98	1.57
77	1.43	99	1.58
78	1.44	100	1.59
79	1.45	101	1.59
80	1.45	102	1.60
81	1.46	103	1.61
82	1.47	104	1.61
83	1.47	105	1.62

TIME TO START BOILING OR CORE UNCOVERY MULTIPLIER [B0072]

HOURS AFTER S/D	MULTIPLIER	HOURS AFTER S/D	MULTIPLIER
106	1.63	112	1.67
107	1.63	114	1.68
108	1.64	116	1.70
109	1.65	118	1.71
110	1.66	120 (5 days)	1.72

DAYS AFTER S/D	MULTIPLIER	DAYS AFTER S/D	MULTIPLIER
6	1.84	70	5.83
7	1.98	80	6.24
8	2.09	90	6.72
9	2.20	100	7.15
10	2.30	110	7.59
15	2.71	120	8.01
20	3.08	150	8.99
25	3.39	180	10.47
30	3.62	210	11.71
35	3.89	240	13.03
40	4.20	270	13.69
45	4.57	300	14.47
50	4.82	330	15.39
55	5.04	365	16.68
60	5.28		

INVENTORY BALANCE - RCS AND SOURCE VOLUMES

SOURCE	RANGE	Gallons/Inch	Gallons/foot
RWT	All	842.15	10105.83
RX Vessel	Above Hot Leg	68.42	821
RCS (no nozzle dams)	Above Hot Leg	100 **	1200 **
RFP	44-67 feet	1091	13092
U-1 Cavity (North)	34-44 feet	247.58	2971
U-1 Cavity (South)	29.5-44 feet	363.75	4365
U-2 Cavity (North)	29.5-44 feet	363.75	4365
U-2 Cavity (South)	34-44 feet	247.58	2971
Pressurizer	All	30	360
VCT	All	27	324
SIT	All	40	480
RCWRT/RCWMT	All	195	2340.1

RCS total volume, SG tubes dry, 39.1 feet to 38 feet =
4385 gallons (no nozzle dams)
2961 gallons (nozzle dams installed)

RCS total volume, 38 feet to 37.5 feet =
3259 gallons (no nozzle dams)
2603 gallons (nozzle dams installed)

** The effects of static head pressure on the air volume in the SG tubes will affect the volume of RCS displaced into the SG tubes.

TIME TO START BOILING AFTER LOSS OF SDC, 24 HOURS AFTER SHUTDOWN [B0072]

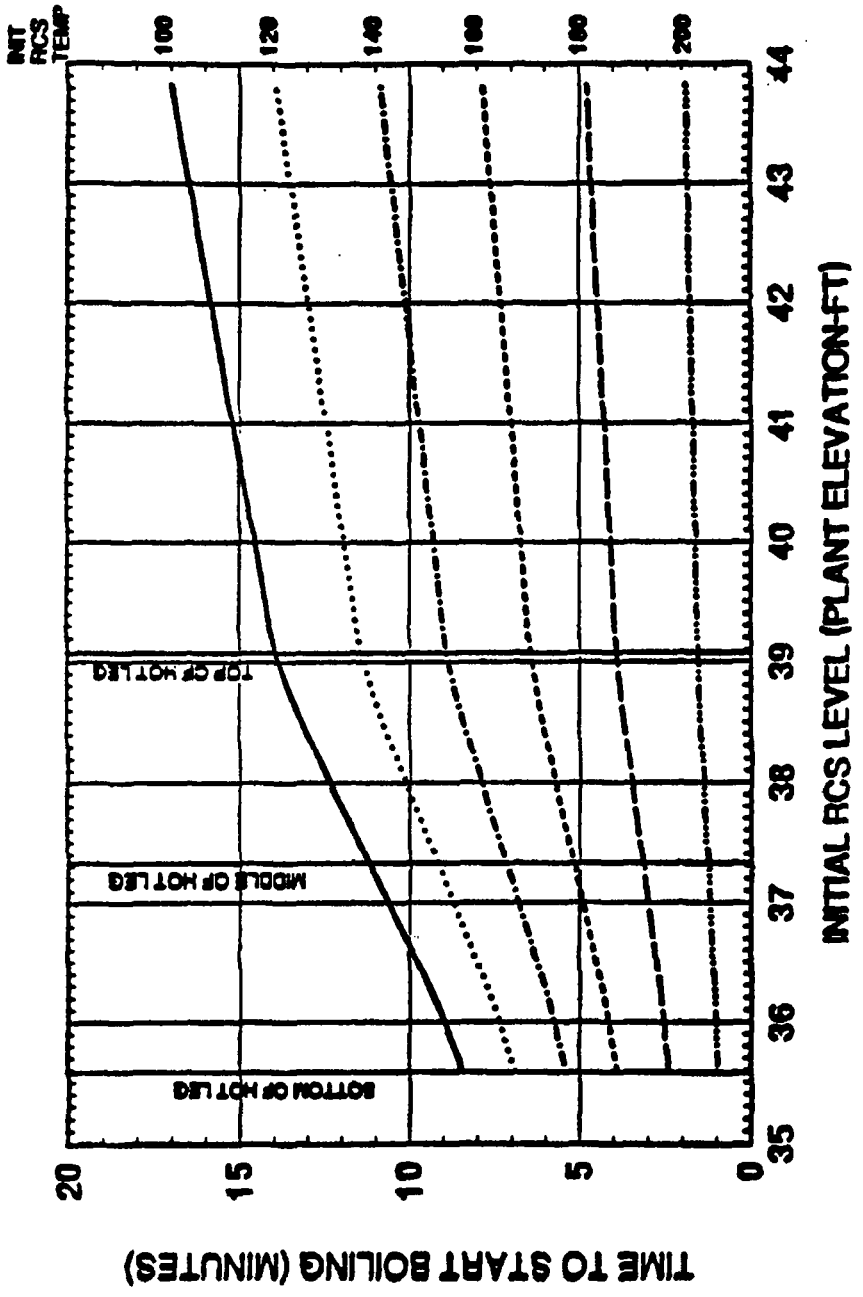

TIME TO START BOILING AFTER LOSS OF SDC, 24 HOURS AFTER SHUTDOWN WITH S/G TUBES FULL [B0072]

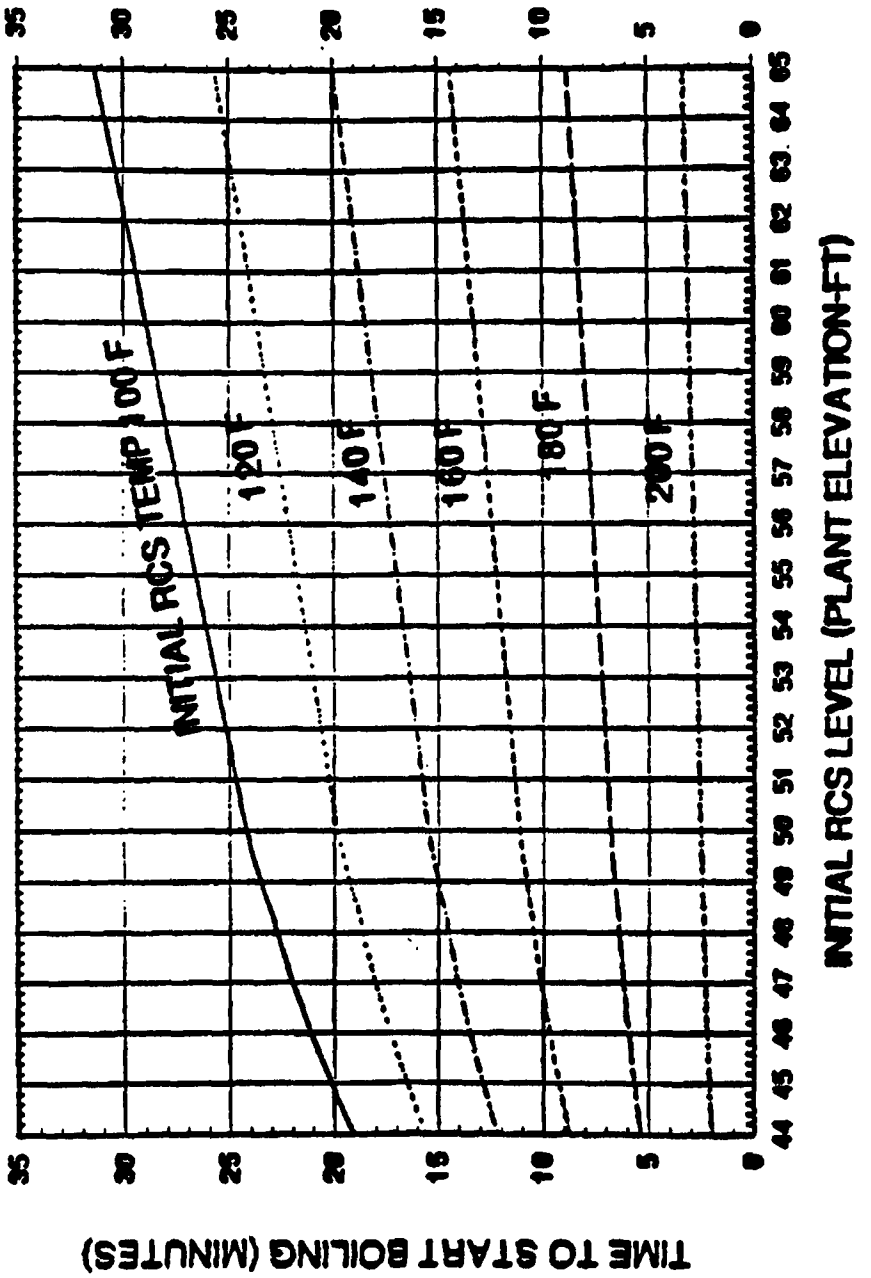

TIME TO CORE UNCOVERY AFTER LOSS OF SDC, 24 HOURS AFTER SHUTDOWN, NO NOZZLE DAMS, NO INJECTION, NO COLD LEG HOLE [B0072]

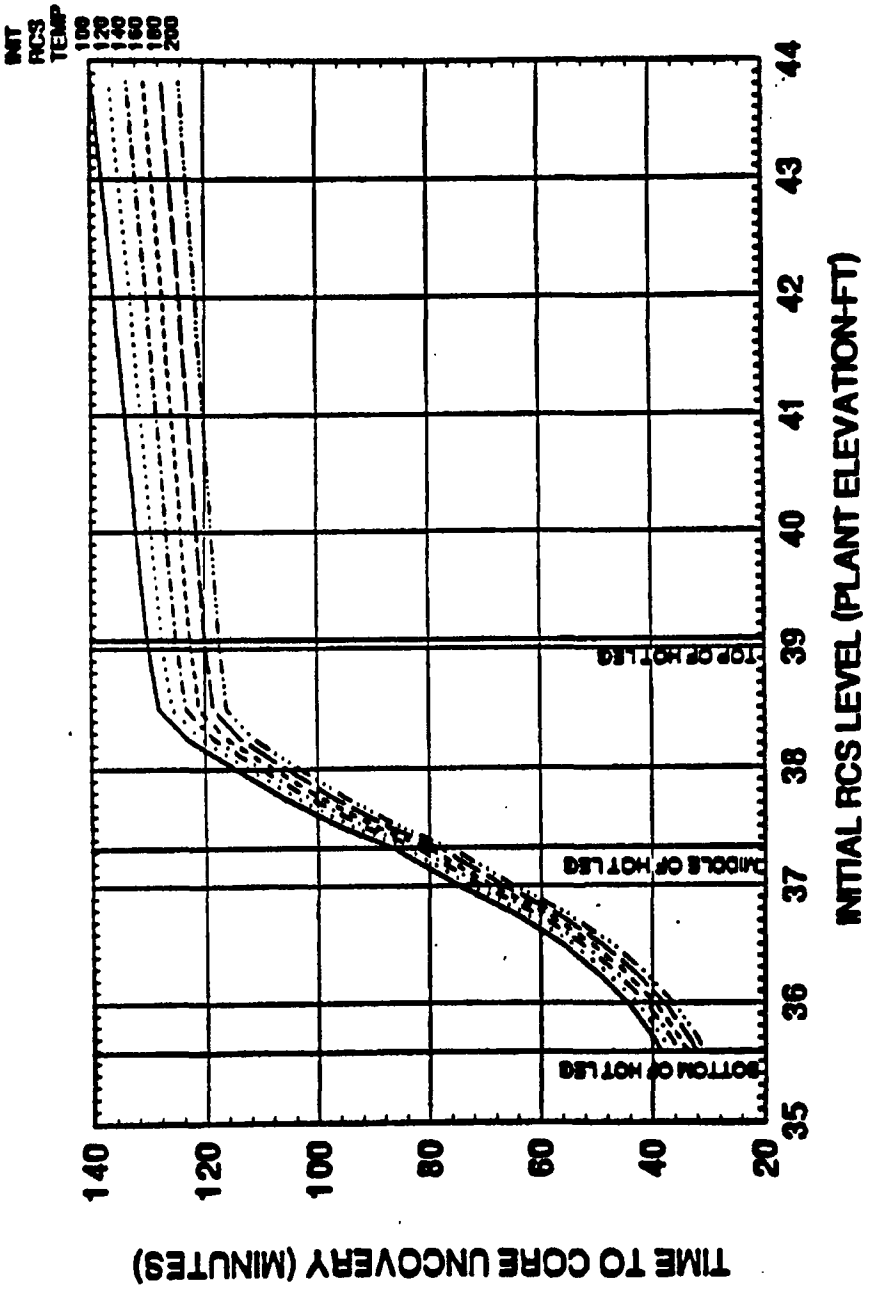

TIME TO CORE UNCOVERY AFTER LOSS OF SDC, 24 HOURS AFTER SHUTDOWN WITH NOZZLE DAMS, NO INJECTION, NO COLD LEG HOLE [B0072]

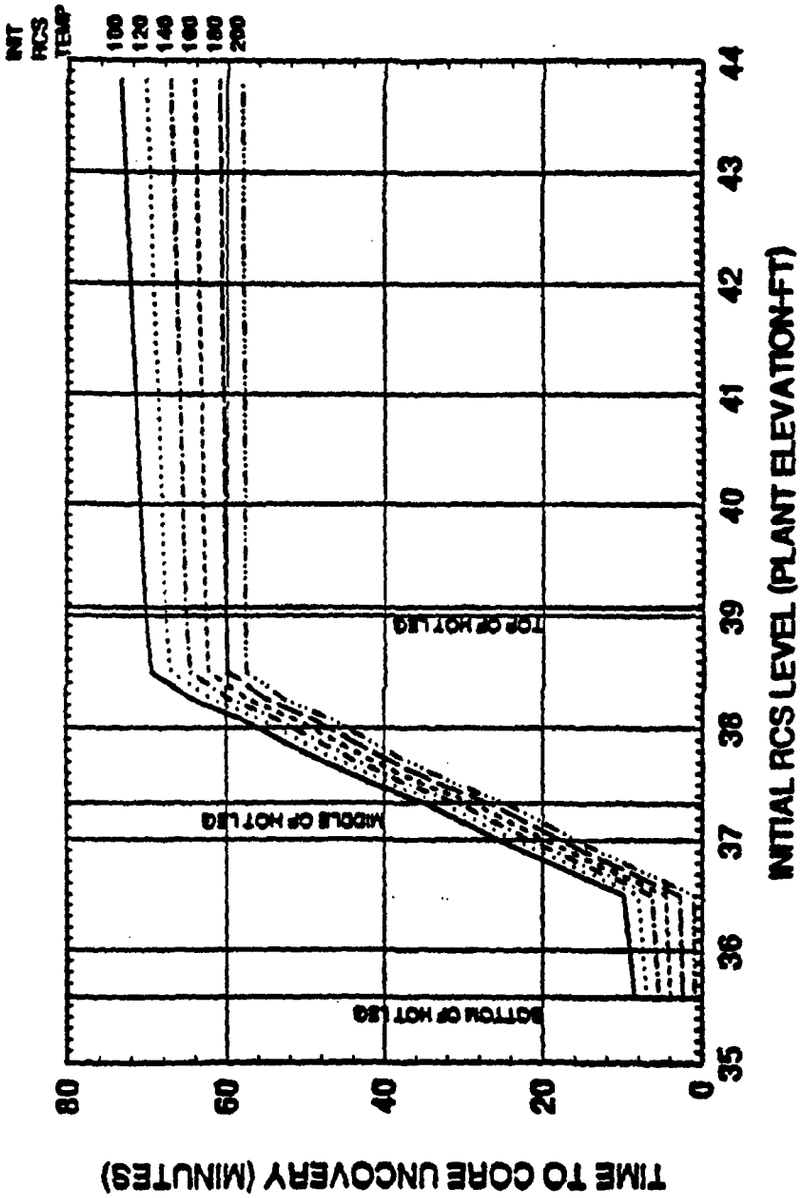

RFP TIME TO BOIL AFTER LOSS OF SDC, 24 HOURS AFTER SHUTDOWN [B0072]

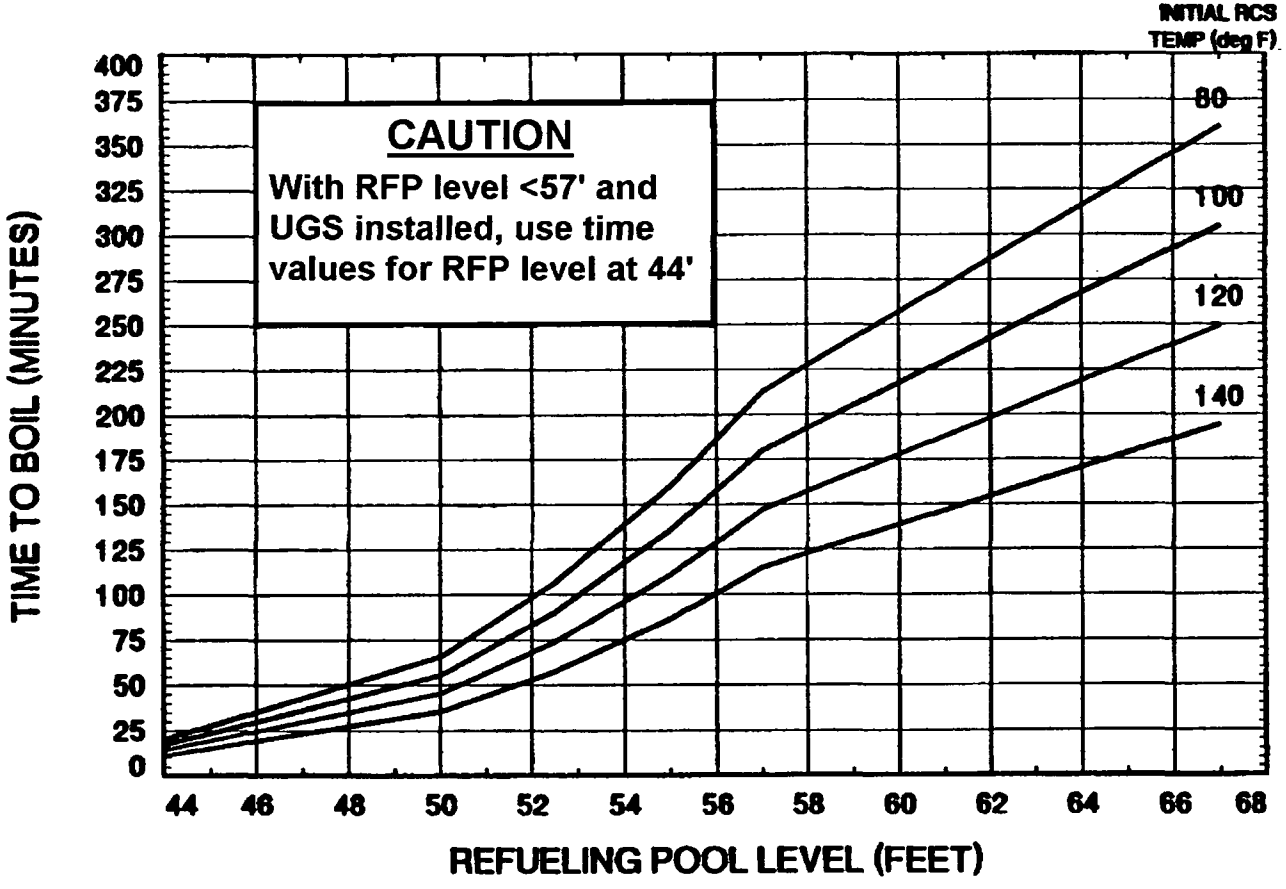

NARROW RANGE S/G LEVEL

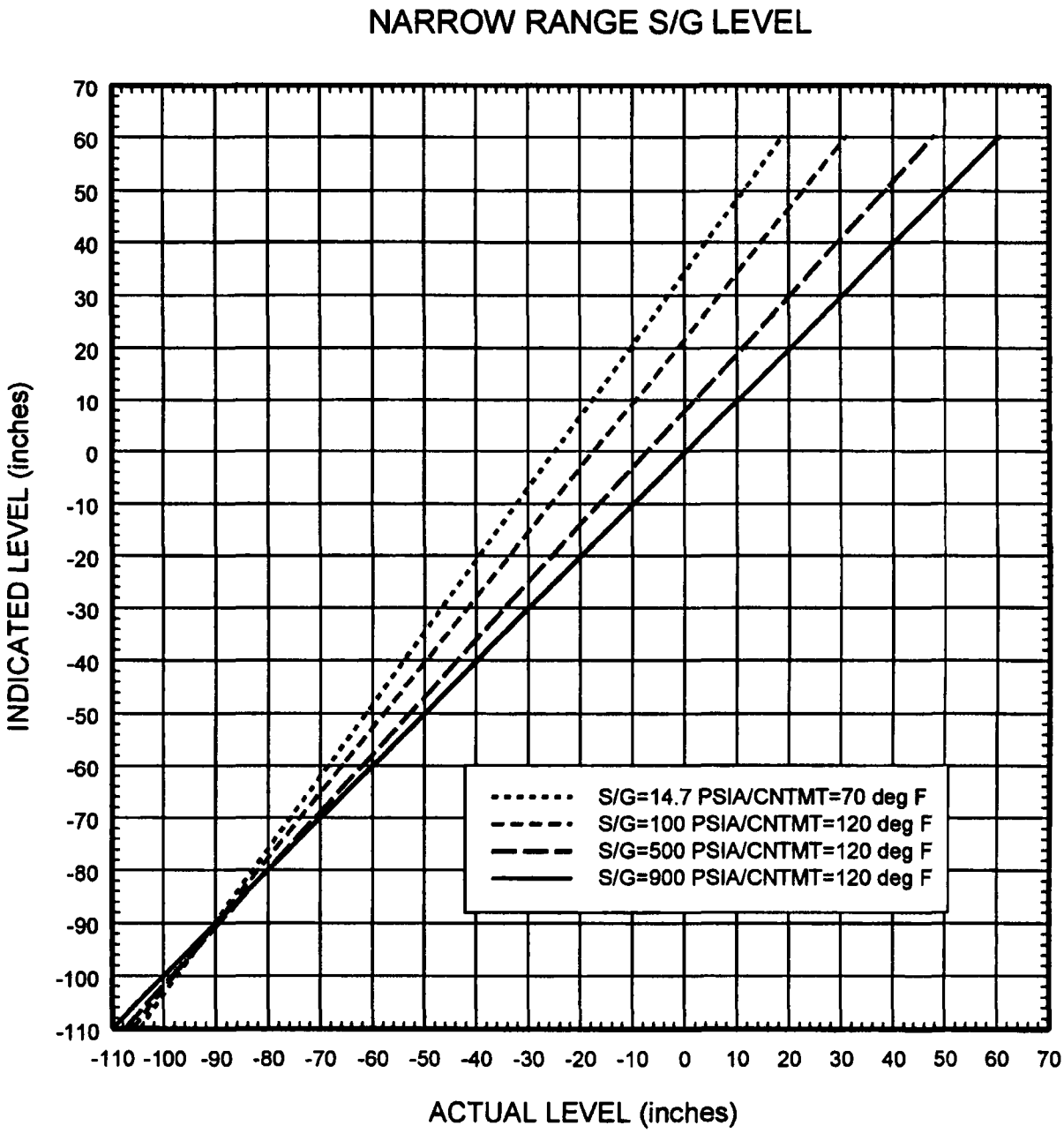

SHUTDOWN OPERATIONS

RCS VACUUM FILL EQUIPMENT

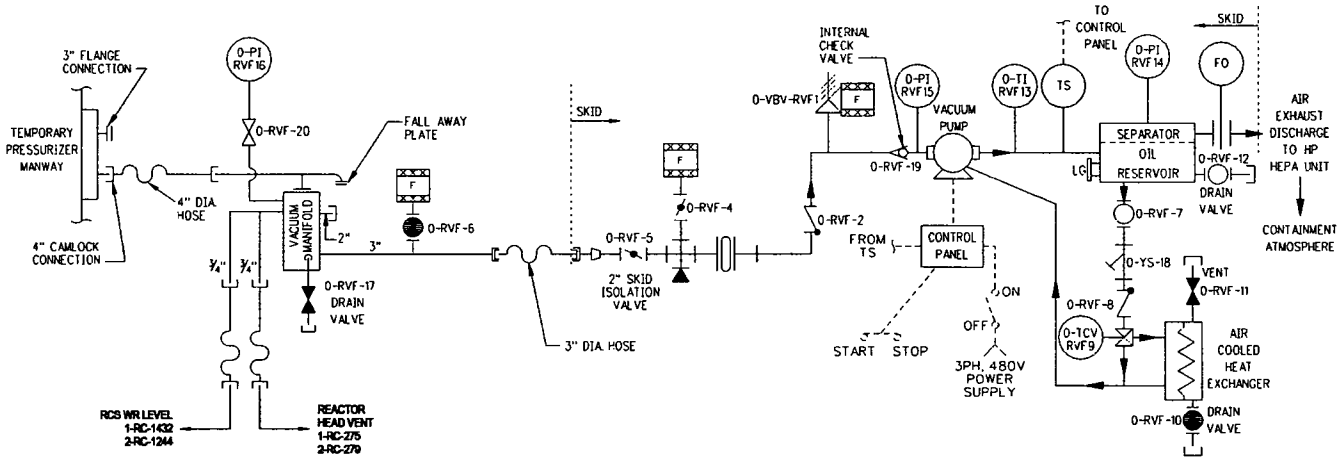

RCS EVACUATION TIME

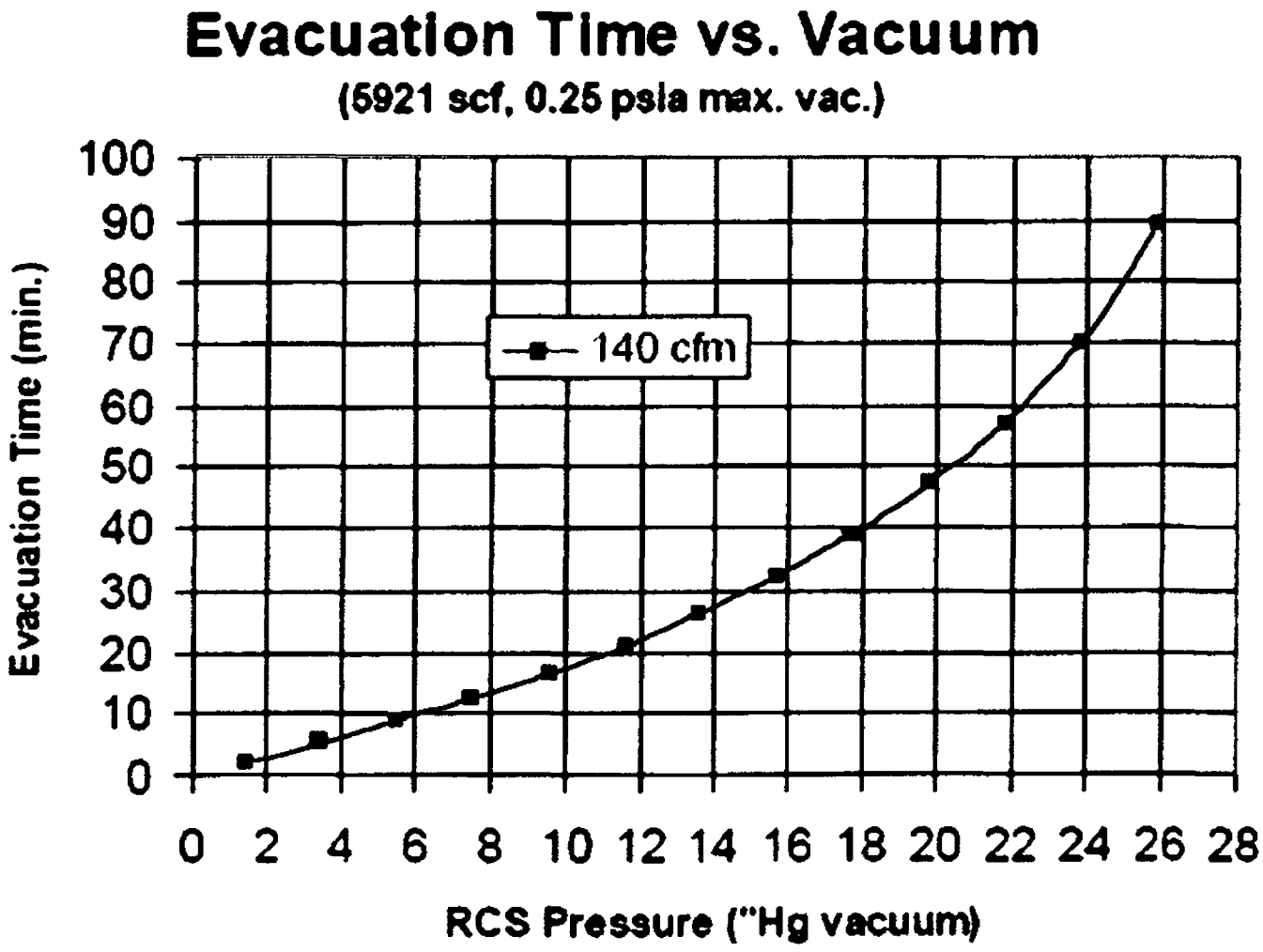

PRESSURIZER COOLDOWN LOG

PZR COOLDOWN NO. _____ DATE/TIME C/D STARTED_____

PZR cooldown should be conducted at a linear rate, **NOT** to exceed 200°F in any one hour period. PZR temperature should be recorded every 15 minutes and should **NOT** exceed 50°F in any 15 minute interval. The maximum step change in PZR temperature should **NOT** exceed 33.3°F. A soak period of 10 minutes should occur after each step change in temperature. Operating experience has shown that when collapsing the PZR bubble, layers of stratified water may move past the PZR temperature element indicating step changes greater than 33.3°F. Soak periods are **NOT** required when collapsing the PZR bubble. PZR cooldown shall **NOT** exceed 200°F in any one hour period.

TIME	PZR PRESS (PSIA) (1)	PZR TEMP (°F) (2)	PZR SPRAY TEMP (°F) (3)	PZR C/D RATE (°F/HR)	PZR SPRAY DIFFERENTIAL TEMP (°F) (4)	INIT	CALC. CHECK INIT

Pressure and Temperature parameters may be read on the Control Board **OR** the Plant Computer

REVIEWED BY: _____
(SM or CRS)

[NOTES (1) - (4) ARE ON THE NEXT PAGE]

PRESSURIZER COOLDOWN LOG

(1) RCS Pressure:

Less Than 1550 PSIA: read the higher of PI-103 **OR** PI-103-1 **OR** read PI-105A

Greater Than 1550 PSIA: read PIC-100X **OR** PIC-100Y **OR** read PI-105A

(2) PZR Temperature: read TI-101

(3) Main Spray Temperature: read TIA-103 **OR** TIA-104

AUX Spray Temperature: read TI-229

(4) Maximum Spray ΔT is 400°F (Ref. TRM 15.4.2)

PRESSURIZER HEATUP LOG

PZR HEATUP NO. _____ DATE/TIME H/U STARTED_____

The heatup of the PZR is to be conducted at a linear rate **NOT** to exceed 100°F in any one hour period. PZR temperature should be recorded every 15 minutes and should **NOT** exceed 25°F in any 15 minute interval. The maximum step change in PZR temperature should **NOT** exceed 16.7°F. A soak period of 10 minutes should occur after each step change in temperature.

TIME	PZR PRESS (PSIA) (1)	PZR TEMP (°F) (2)	PZR SPRAY TEMP (°F) (3)	PZR H/U RATE (°F/HR)	PZR SPRAY DIFFERENTIAL TEMP (°F) (4)	INIT	CALC. CHECK INIT

Pressure and Temperature parameters may be read on the Control Board **OR** the Plant Computer

REVIEWED BY: _____
(SM or CRS)

[NOTES (1) - (4) ARE ON THE NEXT PAGE]

PRESSURIZER HEATUP LOG

(1) RCS Pressure:

Less Than 1550 PSIA: read the higher of PI-103 **OR** PI-103-1 **OR** read PI-105A

Greater Than 1550 PSIA: read PIC-100X **OR** PIC-100Y **OR** read PI-105A

(2) PZR Temperature: read TI-101

(3) Main Spray Temperature: read TIA-103 **OR** TIA-104

AUX Spray Temperature: read TI-229

(4) Maximum Spray ΔT is 400°F (Ref. TRM 15.4.2)

RCS HEATUP LOG

RCS HEATUP NO. _____ DATE/TIME H/U STARTED_____

RCS temperature shall be recorded every 15 minutes during heatup. A soak period of 10 minutes should occur after each step change in temperature. Reactor Vessel heatup limits are as follows:

RCS TEMPERATURE	H/U RATE LIMIT	15 MINUTE ΔT	STEP CHANGE ΔT
70°F to 246°F	80°F per hour	20°F	13.3°F
Greater than 246°F	100°F per hour	25°F	16.7°F

TIME	RCS(1) PRESS (PSIA)	RCS (2) TEMP (°F)	H/U RATE (°F/HR)	INIT	CALC. CHECK INIT	TIME	RCS(1) PRESS (PSIA)	RCS (2) TEMP (°F)	H/U RATE (°F/HR)	INIT	CALC. CHECK INIT

Pressure and Temperature parameters may be read on the Control Board **OR** the Plant Computer

REVIEWED BY: _____
(SM or CRS)

[NOTES (1) & (2) ARE ON THE NEXT PAGE]

RCS HEATUP LOG

(1) RCS Pressure:

Less Than 1550 PSIA: read the higher of PIC-103 **OR** PIC-103-1 **OR** read PI-105A

Greater Than 1550 PSIA: read PIC-100X **OR** PIC-100Y **OR** read PI-105A

(2) RCS Temperature: **Forced Flow:** read TI-112C **OR** TI-122C

Natural Circ: RCS Temp Greater than 358°F: read average of at least 2 CETs

RCS Temp Less than 358°F: read lowest valid displayed CET

SDC Flow: read TR-351

CALCULATION OF FINAL RWT CONCENTRATION FOR RCS DRAIN

A. This Appendix has been page checked against the LIST OF EFFECTIVE PAGES. **[M0002]**

B. **UTILIZE** the following calculation to determine the final RWT Boron concentration if the RCS will be drained to the RWT:

> **NOTE**
> When drawing a Pressurizer bubble, assume that the RWT level change equals 10 inches:
> PZR "solid" = 404 in
> Drain PZR from 404 in to 144 in = 260 in
> PZR volume = 30 gal/in 260 in x 30 gal/in = 7800 gal
> RWT = 842 gal/in
> (7800 gal)/(842 gal/in) = 9.26 in

$$\frac{C1V1 + C2V2}{V1 + V2} = Cf$$

$$\frac{[(\quad PPM)(\quad in)]+[(\quad PPM)(\quad in)]}{(\quad in)+(\quad in)} = _____ppm$$

Where:

- C1 = Present RWT concentration (PPM)
- V1 = Present RWT level (inches)
- C2 = Present RCS concentration (PPM)
- V2 = change in RWT level (10 inches for drawing Pressurizer bubble)
- Cf = Final RWT concentration (PPM)
- 2450 = Low Administrative limit (PPM)

C. **IF** Cf is less than 2450 PPM,
THEN CONSIDER RAISING RWT Boron concentration to a value that would permit draining **OR DRAIN** to RCW.

REACTOR VESSEL LEVEL CORRELATION

A. This Appendix has been page checked against the LIST OF EFFECTIVE PAGES. **[M0002]**

_____ / _____
Init Date

B. **RECORD** RCS level indication at each Reactor Vessel level during drain down, on the table below:

RX V LVL CH A	RCS LEVEL	RCS LEVEL INDICATION	RX V LVL CH B	RCS LEVEL	RCS LEVEL INDICATION	INIT
160 in.	46.49 ft.		160 in.	46.49 ft.		
151 in.	45.74 ft.		151 in.	45.74 ft.		
112 in.	42.49 ft.		112 in.	42.49 ft.		
71 in.	39.08 ft.		71 in.	39.08 ft.		
50 in.	37.33 ft.		50 in.	37.33 ft.		

DRAINING THE RCS VIA CVCS TO WPS

A. This Appendix has been page checked against the LIST OF EFFECTIVE PAGES. **[M0002]**

_____/_____
Init Date

NOTE

- **WHEN** RCS level reaches the top of the Hot Leg,
  THEN level fluctuations will occur until the S/G tubes completely drain.
- When the RCS is draining between the 51 foot elevation and the 39 foot elevation an error may exist between the indicated level and the actual level. The indicated level may be lower than the actual level. The error size will be based on the drain rate. The larger the drain rate the larger the error. **[B0132]**

B. **IF** at any time during the drain down, **ALL** RCS level indication is lost, **THEN PERFORM** the following: **[B0072]**

- **IF** tygon tubing is used for local RCS level indication,
  THEN SHUT LOCAL REFUELING LEVEL INDICATOR, 1-RC-1238. ____
- **EVACUATE** personnel from Containment **PER** the CONTAINMENT EVACUATION Attachment of the ERPIP. ____
- **STOP** the RCS drain down **AND EVALUATE** the reason for the loss of the level indication.
  - **IF** the RCS is **NOT** in Reduced Inventory,
    AND at least 2 RCS level indications are available,
    AND ALL RCS level indications that will be used, agree within 0.5 feet,
    THEN CONTINUE the RCS draindown. **[B0597]** ____

  OR

  - **IF** the RCS is in Reduced Inventory,
    AND at least 2 independent RCS level indications are available,
    AND ALL RCS level indications that will be used, agree within 0.5 feet,
    THEN CONTINUE the RCS draindown. **[B0597]** ____

DRAINING THE RCS VIA CVCS TO WPS

C. **IF** at any time during the drain down, the following parameters fluctuate erratically: **[B0072]**

- SDC flow
- LPSI pump suction or discharge pressure
- LPSI pump motor amps

THEN COMPLETE the following actions:

1. **IF** RCS level is less than 37.6 feet,
   THEN VERIFY SDC flow is approximately 1800 GPM. ____

2. **IF** RCS level is greater than 37.6 feet and less than or equal to 41 feet,
   THEN:

   - **IF** 1LE4138 is **NOT** one of the required RCS level indications,
     AND NOT preparing for Vacuum Fill,
     THEN VERIFY SDC flow is approximately 3000 GPM. ____

   OR

   - **IF** 1LE4138 is one of the required RCS level indications,
     OR preparing for Vacuum Fill,
     THEN VERIFY SDC flow is approximately 1800 GPM. ____

3. **IF** RCS level is greater than 41 feet,
   THEN VERIFY SDC flow is approximately 3000 GPM. ____

4. **IF** SDC flow **CANNOT** be restored,
   THEN COMPLETE the following actions:

   a. **STOP** the operating LPSI Pump(s) ____

   b. **STOP** the RCS drain down. ____

   c. **IMPLEMENT** AOP-3B, Abnormal Shutdown Cooling Conditions. ____

D. **NOTIFY** Radiation Safety Supervision draining RCS to WPS. ____

E. **ENSURE** SDC aligned to CVCS purification **PER** OI-2D, PURIFICATION SYSTEM OPERATION. ____

F. **ENSURE** VCT LD INLET, 1-CVC-500-CV, selected to WPS. ____

DRAINING THE RCS VIA CVCS TO WPS

NOTE
Use the lowest reading RCS level indicator as actual RCS level.

G. **IF** RCS level is above 41 feet,
THEN, using ATTACHMENT 4, REFUELING LEVEL CART INSTRUCTIONS,
SET the RCS low level alarms at 41 feet **OR** the target level, which ever is higher:

- 0CRT4136
  - 4136 Low Level Alarm Limit ____
  - 1LE4139 Low Level Alarm Limit ____
  - 1LT4140 Low Level Alarm Limit ____
- 0CRT4137
  - 4137 Low Level Alarm Limit ____
  - 1LE4139 Low Level Alarm Limit ____
  - 1LT4140 Low Level Alarm Limit ____

CAUTION
Operating Experience has shown that purification should be secured slowly to reduce the affects on RCS temperature.

H. **ENSURE** purification is secured:

1. **ENSURE SHUT** SDC Supply to CVCS B/U, 1-SI-464. ____
2. **ENSURE SHUT** CVCS TO SDC, 1-SI-475. ____

NOTE
The operation of CVCS DIVERSION TO DEGAS ISOL, 1-CVC-325, is controlled by NO-1-205, LOCKED VALVES, when SDC is in operation.

I. **UNLOCK AND OPEN** CVCS DIVERSION TO DEGAS ISOL, 1-CVC-325. ____

DRAINING THE RCS VIA CVCS TO WPS

NOTE

- The flow rate indicated on 1-FI-500 will indicate the RCS drain rate.
- The diversion integrator, 1-FQI-2540 on 1C63 may be used to monitor the RCS drain.

J. **THROTTLE OPEN** SDC Supply to CVCS B/U, 1-SI-464, to obtain the desired drain rate. ____

NOTE

- Use the lowest reading RCS level indicator as actual RCS level.
- SDC flow rates greater than 2000 GPM will cause the indication provided by 1LE4138 to become erratic or non existent due to increasing amount of water turbulence in the hot leg.

K. **IF** draining the RCS to less than 41 foot elevation **PER** Section 6.4, REDUCED INVENTORY OPERATIONS,
THEN, using ATTACHMENT 4, REFUELING LEVEL CART INSTRUCTIONS,
RESET the RCS low level alarms every two feet **OR** the target level, which ever is higher:

- 0CRT4136
  - 4136 Low Level Alarm Limit ____
  - 1LE4138 Low Level Alarm Limit (when less than 39 foot) ____
  - 1LE4139 Low Level Alarm Limit ____
  - 1LT4140 Low Level Alarm Limit ____
- 0CRT4137
  - 4137 Low Level Alarm Limit ____
  - 1LE4138 Low Level Alarm Limit (when less than 39 foot) ____
  - 1LE4139 Low Level Alarm Limit ____
  - 1LT4140 Low Level Alarm Limit ____

DRAINING THE RCS VIA CVCS TO WPS

NOTE

- Use the lowest reading RCS level indicator as actual RCS level.
- SDC flow rates greater than 2000 GPM will cause the indication provided by 1LE4138 to become erratic or non existent due to increasing amount of water turbulence in the hot leg.

L. **WHEN** any of the following conditions exist:

- It is desired to stop the draindown to check the RCS level ____
- The RCS is less than the 41 foot elevation **AND** the RCS has been drained two feet. ____
- The RCS is drained to the targeted level ____

THEN:

1. **SHUT** 1-SI-464. ____
2. **WAIT** at least five minutes,
   THEN COMPARE RCS level indications in use.
   a. **IF** the RCS level indications in use do **NOT** agree within 0.5 feet,
      THEN ALLOW additional time for the pressures to equalize. ____
   b. **IF** after 30 minutes the RCS level indications in use still do **NOT** agree within 0.5 feet,
      THEN REQUEST IM to investigate the discrepancies. ____
3. **WHEN** RCS level indications agree within 0.5 feet,
   THEN:
   - **RESET** the RCS low level alarms. ____
   - **IF** RCS level is **NOT** at the targeted level,
     THEN THROTTLE OPEN 1-SI-464 to re-initiate draining. ____
4. **REPEAT** steps L.1 - 3 as necessary until the target RCS level is reached. ____

DRAINING THE RCS VIA CVCS TO WPS

M. **WHEN** the RCS is at the target level,
THEN:

1. **LOCK SHUT** 1-CVC-325. ____

2. **OPEN** 1-SI-475. ____

> **CAUTION**
> Operating Experience has shown that purification should be placed in service slowly to reduce the affects on RCS temperature.

3. **SLOWLY THROTTLE** 1-SI-464 to obtain the desired purification flow rate. ____

> **NOTE**
> While the RCS level is less than the 41 foot elevation, purification should only be in service for draining the RCS, unless 1-CVC-500-CV is gagged in the WPS position.

> **CAUTION**
> If 1-CVC-500-CV is **NOT** gagged in the WPS position **AND** the plant had a loss of Instrument Air, 1-CVC-500-CV would shift to the VCT position, dumping SDC until the purification alignment was isolated.

N. **IF** RCS level is less than the 41 foot elevation **AND** 1-CVC-500-CV is **NOT** gagged in the WPS position,
THEN SECURE purification on SDC **PER** OI-2D, PURIFICATION SYSTEM OPERATION. ____

O. **IF** RCS level is greater than the 41 foot elevation,
THEN PLACE SDC purification in the desired alignment. ____

P. **ALLOW** a minimum of 5 minutes for RCS and Containment pressures to equalize. ____

DRAINING THE RCS VIA CVCS TO WPS

NOTE
SDC flow rates greater than 2000 GPM will cause the indication provided by 1LE4138 to become erratic or non existent due to increasing amount of water turbulence in the hot leg.

Q. **COMPARE** RCS level indications in use.

1. **IF** the RCS level indications in use do **NOT** agree within 0.5 feet, **THEN ALLOW** additional time for the pressures to equalize. ____

2. **IF** after 30 minutes the RCS level indications in use still do **NOT** agree within 0.5 feet, **THEN REQUEST** IM to investigate the discrepancies. ____

R. **NOTIFY** Radiation Safety Supervision draining is complete. ____

S. This Appendix has been page checked against the LIST OF EFFECTIVE PAGES. **[M0002]**

____/_____
Init Date

DRAINING THE RCS VIA CVCS TO THE VCT

A. This Appendix has been page checked against the LIST OF EFFECTIVE PAGES. [M0002]

____/_____
Init Date

NOTE
There is approximately 27 gals/inch in the VCT.

B. **VERIFY** there is adequate room in the VCT. ____

NOTE

- **WHEN** RCS level reaches the top of the Hot Leg,
  THEN level fluctuations will occur until the S/G tubes completely drain.
- When the RCS is draining between the 51 foot elevation and the 39 foot elevation an error may exist between the indicated level and the actual level. The indicated level may be lower than the actual level. The error size will be based on the drain rate. The larger the drain rate the larger the error. **[B0132]**

C. **IF** at any time during the draindown, ALL RCS level indication is lost,
THEN PERFORM the following: **[B0072]**

- **IF** tygon tubing is used for local RCS level indication,
  THEN SHUT Local Refueling Level Indicator, 1-RC-1238. ____
- **EVACUATE** personnel from Containment **PER** the CONTAINMENT EVACUATION Attachment of the ERPIP. ____
- **STOP** the RCS drain down **AND EVALUATE** the reason for the loss of the level indication.
  - **IF** the RCS is **NOT** in Reduced Inventory,
    AND at least 2 RCS level indications are available,
    AND ALL RCS level indications that will be used, agree within 0.5 feet,
    THEN CONTINUE the RCS draindown. **[B0597]** ____

  OR

  - **IF** the RCS is in Reduced Inventory,
    AND at least 2 independent RCS level indications are available,
    AND ALL RCS level indications that will be used, agree within 0.5 feet,
    THEN CONTINUE the RCS draindown. **[B0597]** ____

DRAINING THE RCS VIA CVCS TO THE VCT

D. **IF** the following parameters fluctuate erratically any time during the draindown: **[B0072]**

- SDC flow
- LPSI pump suction or discharge pressure
- LPSI pump motor amps

THEN COMPLETE the following actions:

1. **IF** RCS level is less than 37.6 feet,
   THEN VERIFY SDC flow is approximately 1800 GPM. ____

2. **IF** RCS level is greater than 37.6 feet and less than or equal to 41 feet,
   THEN:

   - **IF** 1LE4138 is **NOT** one of the required RCS level indications,
     AND NOT preparing for Vacuum Fill,
     THEN VERIFY SDC flow is approximately 3000 GPM. ____

   OR

   - **IF** 1LE4138 is one of the required RCS level indications,
     OR preparing for Vacuum Fill,
     THEN VERIFY SDC flow is approximately 1800 GPM. ____

3. **IF** RCS level is greater than 41 feet,
   THEN VERIFY SDC flow is approximately 3000 GPM. ____

4. **IF** SDC flow CANNOT be restored,
   THEN COMPLETE the following actions:

   a. **STOP** the operating LPSI Pump(s) ____

   b. **STOP** the RCS draindown. ____

   c. **IMPLEMENT** AOP-3B, Abnormal Shutdown Cooling Conditions. ____

E. **NOTIFY** Radiation Safety Supervision draining RCS to VCT. ____

F. **IF** VCT level indication is lost at any time during the draindown,
THEN immediately **SECURE** the draindown by placing 1-CVC-500-CV in the WPS position. ____

G. **ENSURE** SDC aligned to CVCS purification **PER** OI-2D, PURIFICATION SYSTEM OPERATION. ____

DRAINING THE RCS VIA CVCS TO THE VCT

NOTE
Use the lowest reading RCS level indicator as actual RCS level.

H. **IF** RCS level is above 41 feet,
THEN, using ATTACHMENT 4, REFUELING LEVEL CART INSTRUCTIONS,
SET the RCS low level alarms at 41 feet **OR** the target level, which ever is higher:

- 0CRT4136
  - 4136 Low Level Alarm Limit ____
  - 1LE4139 Low Level Alarm Limit ____
  - 1LT4140 Low Level Alarm Limit ____
- 0CRT4137
  - 4137 Low Level Alarm Limit ____
  - 1LE4139 Low Level Alarm Limit ____
  - 1LT4140 Low Level Alarm Limit ____

I. **PLACE** VCT LD Inlet, 1-CVC-500-CV in the VCT position. ____

DRAINING THE RCS VIA CVCS TO THE VCT

NOTE

- Use the lowest reading RCS level indicator as actual RCS level.
- SDC flow rates greater than 2000 GPM will cause the indication provided by 1LE4138 to become erratic or non existent due to increasing amount of water turbulence in the hot leg.

J. **IF** draining the RCS to less than 41 foot elevation **PER** Section 6.4, REDUCED INVENTORY OPERATIONS,
THEN, using ATTACHMENT 4, REFUELING LEVEL CART INSTRUCTIONS,
RESET the RCS low level alarms every two feet **OR** the target level, which ever is higher:

- 0CRT4136
  - 4136 Low Level Alarm Limit ____
  - 1LE4138 Low Level Alarm Limit (when less than 39 foot) ____
  - 1LE4139 Low Level Alarm Limit ____
  - 1LT4140 Low Level Alarm Limit ____
- 0CRT4137
  - 4137 Low Level Alarm Limit ____
  - 1LE4138 Low Level Alarm Limit (when less than 39 foot) ____
  - 1LE4139 Low Level Alarm Limit ____
  - 1LT4140 Low Level Alarm Limit ____

DRAINING THE RCS VIA CVCS TO THE VCT

NOTE

- Use the lowest reading RCS level indicator as actual RCS level.
- SDC flow rates greater than 2000 GPM will cause the indication provided by 1LE4138 to become erratic or non existent due to increasing amount of water turbulence in the hot leg.

K. **WHEN** any of the following conditions exist:

- It is desired to stop the draindown to check the RCS level ____
- The RCS is less than the 41 foot elevation **AND** the RCS has been drained two feet. ____
- The RCS is drained to the targeted level ____
- VCT level is approaching 108 inches ____

THEN:

1. **PLACE** 1-CVC-500-CV in the WPS position. ____
2. **WAIT** at least five minutes,
   THEN COMPARE RCS level indications in use.
   a. **IF** the RCS level indications in use do **NOT** agree within 0.5 feet,
      THEN ALLOW additional time for the pressures to equalize. ____
   b. **IF** after 30 minutes the RCS level indications in use still do **NOT** agree within 0.5 feet,
      THEN REQUEST IM to investigate the discrepancies. ____
3. **WHEN** RCS level indications agree within 0.5 feet,
   THEN:
   - **RESET** the RCS low level alarms. ____
   - **IF** RCS level is **NOT** at the targeted level,
     THEN PLACE 1-CVC-500-CV in the VCT position. ____
4. **REPEAT** steps K.1 - K.3 as necessary until the target RCS level is reached or VCT level is 108 inches. ____

L. **WHEN** the RCS level is at the target level **OR** the VCT level is 108 inches,
THEN PLACE 1-CVC-500-CV in the WPS position. ____

DRAINING THE RCS VIA CVCS TO THE VCT

CAUTION

If 1-CVC-500-CV is **NOT** gagged in the WPS position **AND** the plant had a loss of Instrument Air, 1-CVC-500-CV would shift to the VCT position, dumping SDC until the purification alignment was isolated.

M. **IF** RCS level is less than the 41 foot elevation **AND** 1-CVC-500-CV is **NOT** gagged in the WPS position,
THEN SECURE purification on SDC **PER** OI-2D, PURIFICATION SYSTEM OPERATION. ____

N. **ALLOW** a minimum of 5 minutes for RCS and Containment pressures to equalize. ____

NOTE

SDC flow rates greater than 2000 GPM will cause the indication provided by 1LE4138 to become erratic or non existent due to increasing amount of water turbulence in the hot leg.

O. **COMPARE** RCS level indications in use.

1. **IF** the RCS level indications in use do **NOT** agree within 0.5 feet,
THEN ALLOW additional time for the pressures to equalize. ____

2. **IF** after 30 minutes the RCS level indications in use still do **NOT** agree within 0.5 feet,
THEN REQUEST IM to investigate the discrepancies. ____

P. **NOTIFY** Radiation Safety Supervision draining is complete. ____

Q. This Appendix has been page checked against the LIST OF EFFECTIVE PAGES. **[M0002]**

____/____
Init Date

DRAINING THE RCS VIA LPSI MINIFLOW TO RWT

A. This Appendix has been page checked against the LIST OF EFFECTIVE PAGES. **[M0002]**

____/_____
Init Date

B. **VERIFY** with Chemistry that RCS water quality is good enough to go in the RWT. ____

NOTE

- **WHEN** RCS level reaches the top of the Hot Leg, **THEN** level fluctuations will occur until the S/G tubes completely drain.
- When the RCS is draining between the 51 foot elevation and the 39 foot elevation an error may exist between the indicated level and the actual level. The indicated level may be lower than the actual level. The error size will be based on the drain rate. The larger the drain rate the larger the error. **[B0132]**

C. **IF** at any time during the drain down, **ALL** RCS level indication is lost, **THEN PERFORM** the following: **[B0072]**

- **IF** tygon tubing is used for local RCS level indication, **THEN SHUT** LOCAL REFUELING LEVEL INDICATOR, 1-RC-1238. ____
- **EVACUATE** personnel from Containment **PER** the CONTAINMENT EVACUATION Attachment of the ERPIP. ____
- **STOP** the RCS drain down **AND EVALUATE** the reason for the loss of the level indication.
  - **IF** the RCS is **NOT** in Reduced Inventory, **AND** at least 2 RCS level indications are available, **AND** ALL RCS level indications that will be used, agree within 0.5 feet, **THEN CONTINUE** the RCS draindown. **[B0597]** ____

  OR

  - **IF** the RCS is in Reduced Inventory, **AND** at least 2 independent RCS level indications are available, **AND** ALL RCS level indications that will be used, agree within 0.5 feet, **THEN CONTINUE** the RCS draindown. **[B0597]** ____

DRAINING THE RCS VIA LPSI MINIFLOW TO RWT

D. **IF** at any time during the drain down, the following parameters fluctuate erratically: **[B0072]**

- SDC flow
- LPSI pump suction or discharge pressure
- LPSI pump motor amps

THEN COMPLETE the following actions:

1. **IF** RCS level is less than 37.6 feet,
   THEN VERIFY SDC flow is approximately 1800 GPM. ____

2. **IF** RCS level is greater than 37.6 feet and less than or equal to 41 feet,
   THEN:

   - **IF** 1LE4138 is **NOT** one of the required RCS level indications,
     AND NOT preparing for Vacuum Fill,
     THEN VERIFY SDC flow is approximately 3000 GPM. ____

   OR

   - **IF** 1LE4138 is one of the required RCS level indications,
     OR preparing for Vacuum Fill,
     THEN VERIFY SDC flow is approximately 1800 GPM. ____

3. **IF** RCS level is greater than 41 feet,
   THEN VERIFY SDC flow is approximately 3000 GPM. ____

4. **IF** SDC flow **CANNOT** be restored,
   THEN COMPLETE the following actions:

   a. **STOP** the operating LPSI Pump(s) ____

   b. **STOP** the RCS drain down. ____

   c. **IMPLEMENT** AOP-3B, Abnormal Shutdown Cooling Conditions. ____

E. **CALCULATE** the final RWT boron concentration **PER** APPENDIX 4, CALCULATION OF FINAL RWT CONCENTRATION FOR RCS DRAIN. ____

F. **NOTIFY** Radiation Safety Supervision of the pending RCS drain to the RWT. ____

G. Periodically **MONITOR** SFP level during the drain **AND** for 30 minutes after. ____

DRAINING THE RCS VIA LPSI MINIFLOW TO RWT

NOTE
Use the lowest reading RCS level indicator as actual RCS level.

H. **IF** RCS level is above 41 feet,
THEN, using ATTACHMENT 4, REFUELING LEVEL CART INSTRUCTIONS,
SET the RCS low level alarms at 41 feet **OR** the target level, which ever is higher:

- 0CRT4136
  - 4136 Low Level Alarm Limit ____
  - 1LE4139 Low Level Alarm Limit ____
  - 1LT4140 Low Level Alarm Limit ____
- 0CRT4137
  - 4137 Low Level Alarm Limit ____
  - 1LE4139 Low Level Alarm Limit ____
  - 1LT4140 Low Level Alarm Limit ____

NOTE
Locked valves, controlled under NO-1-205.

I. **PERFORM** one or both of the following to achieve the desired flowrate to the RWT:

1. **OPEN** the operating LPSI Mini-flow Return Isolation:
   - 11 LPSI PP MINIFLOW RTN ISOL.....1-SI-449 ____
   - 12 LPSI PP MINIFLOW RTN ISOL.....1-SI-450 ____
2. **OPEN** the applicable SDC HX TO HPSI suction(s):
   - 11 SDC HX TO HPSI SUCT.....1-SI-663-MOV ____
   - 12 SDC HX TO HPSI SUCT.....1-SI-662-MOV ____

DRAINING THE RCS VIA LPSI MINIFLOW TO RWT

NOTE

- Use the lowest reading RCS level indicator as actual RCS level.
- SDC flow rates greater than 2000 GPM will cause the indication provided by 1LE4138 to become erratic or non existent due to increasing amount of water turbulence in the hot leg.

J. **IF** draining the RCS to less than 41 foot elevation **PER** Section 6.4, REDUCED INVENTORY OPERATIONS,
THEN, using ATTACHMENT 4, REFUELING LEVEL CART INSTRUCTIONS,
RESET the RCS low level alarms every two feet **OR** the target level, which ever is higher:

- 0CRT4136
  - 4136 Low Level Alarm Limit ____
  - 1LE4138 Low Level Alarm Limit (when less than 39 foot) ____
  - 1LE4139 Low Level Alarm Limit ____
  - 1LT4140 Low Level Alarm Limit ____
- 0CRT4137
  - 4137 Low Level Alarm Limit ____
  - 1LE4138 Low Level Alarm Limit (when less than 39 foot) ____
  - 1LE4139 Low Level Alarm Limit ____
  - 1LT4140 Low Level Alarm Limit ____

DRAINING THE RCS VIA LPSI MINIFLOW TO RWT

NOTE

- Use the lowest reading RCS level indicator as actual RCS level.
- SDC flow rates greater than 2000 GPM will cause the indication provided by 1LE4138 to become erratic or non existent due to increasing amount of water turbulence in the hot leg.

K. **WHEN** any of the following conditions exist:

- It is desired to stop the draindown to check the RCS level ____
- The RCS is less than the 41 foot elevation **AND** the RCS has been drained two feet. ____
- The RCS is drained to the targeted level ____

THEN,

1. **IF** opened to drain the RCS,
   THEN SHUT the miniflow isolation on the running LPSI pump:
   - 11 LPSI PP MINIFLOW RTN ISOL....1-SI-449 ____
   - 12 LPSI PP MINIFLOW RTN ISOL....1-SI-450 ____
2. **IF** opened to raise the drain rate,
   THEN SHUT the in service SDC heat exchanger to HPSI pump suction valve(s):
   - 11 SDC HX TO HPSI SUCT...1-SI-663-MOV ____
   - 12 SDC HX TO HPSI SUCT...1-SI-662-MOV ____
3. **WAIT** at least five minutes,
   THEN COMPARE RCS level indications in use.
   a. **IF** the RCS level indications in use do **NOT** agree within 0.5 feet,
      THEN ALLOW additional time for the pressures to equalize. ____
   b. **IF** after 30 minutes the RCS level indications in use still do **NOT** agree within 0.5 feet,
      THEN REQUEST IM to investigate the discrepancies. ____
4. **WHEN** RCS level indications agree within 0.5 feet, **IF** desired to re-initiate draining,
   THEN OPEN the selected LPSI pump miniflow **OR** the in service SDC heat exchanger to HPSI pump suction valve. ____
5. **REPEAT** steps K.1 - 4 as necessary until the target RCS level is reached. ____

DRAINING THE RCS VIA LPSI MINIFLOW TO RWT

L. **WHEN** the RCS is at the target level,
THEN PERFORM the following:

1. **IF** opened to drain the RCS,
THEN LOCK SHUT the miniflow isolation on the running LPSI pump:

   - 11 LPSI PP MINIFLOW RTN ISOL....1-SI-449 ____
   - 12 LPSI PP MINIFLOW RTN ISOL....1-SI-450 ____

2. **IF** opened to raise the drain rate,
THEN SHUT the in service SDC heat exchanger to HPSI pump suction valve:

   - 11 SDC HX TO HPSI SUCT...1-SI-663-MOV ____
   - 12 SDC HX TO HPSI SUCT...1-SI-662-MOV ____

M. **ALLOW** a minimum of 5 minutes for RCS and Containment pressures to equalize. ____

> **NOTE**
> SDC flow rates greater than 2000 GPM will cause the indication provided by 1LE4138 to become erratic or non existent due to increasing amount of water turbulence in the hot leg.

N. **COMPARE** RCS level indications in use.

1. **IF** the RCS level indications in use do **NOT** agree within 0.5 feet,
THEN ALLOW additional time for the pressures to equalize. ____

2. **IF** after 30 minutes the RCS level indications in use still do **NOT** agree within 0.5 feet,
THEN REQUEST IM to investigate the discrepancies. ____

O. **NOTIFY** Radiation Safety Supervision draining is complete. ____

P. This Appendix has been page checked against the LIST OF EFFECTIVE PAGES. **[M0002]**

____ / ____
Init Date

DRAINING THE RCS VIA RCS DRAIN VALVES

A. This Appendix has been page checked against the LIST OF EFFECTIVE PAGES. [M0002]

____/_____
Init Date

NOTE

- **WHEN** RCS level reaches the top of the Hot Leg, **THEN** level fluctuations will occur until the S/G tubes completely drain.
- When the RCS is draining between the 51 foot elevation and the 39 foot elevation an error may exist between the indicated level and the actual level. The indicated level may be lower than the actual level. The error size will be based on the drain rate. The larger the drain rate the larger the error. **[B0132]**

B. **IF** at any time during the drain down, **ALL** RCS level indication is lost, **THEN PERFORM** the following: **[B0072]**

- **IF** tygon tubing is used for local RCS level indication, **THEN SHUT** LOCAL REFUELING LEVEL INDICATOR, 1-RC-1238. ____
- **EVACUATE** personnel from Containment **PER** the CONTAINMENT EVACUATION Attachment of the ERPIP. ____
- **STOP** the RCS drain down **AND EVALUATE** the reason for the loss of the level indication.
  - **IF** the RCS is **NOT** in Reduced Inventory, **AND** at least 2 RCS level indications are available, **AND** ALL RCS level indications that will be used, agree within 0.5 feet, **THEN CONTINUE** the RCS draindown. **[B0597]** ____

  OR

  - **IF** the RCS is in Reduced Inventory, **AND** at least 2 independent RCS level indications are available, **AND** ALL RCS level indications that will be used, agree within 0.5 feet, **THEN CONTINUE** the RCS draindown. **[B0597]** ____

DRAINING THE RCS VIA RCS DRAIN VALVES

C. **IF** at any time during the drain down, the following parameters fluctuate erratically: **[B0072]**

- SDC flow
- LPSI pump suction or discharge pressure
- LPSI pump motor amps

THEN COMPLETE the following actions:

1. **IF** RCS level is less than 37.6 feet,
   THEN VERIFY SDC flow is approximately 1800 GPM. ____

2. **IF** RCS level is greater than 37.6 feet and less than or equal to 41 feet,
   THEN:

   - **IF** 1LE4138 is **NOT** one of the required RCS level indications,
     AND NOT preparing for Vacuum Fill,
     THEN VERIFY SDC flow is approximately 3000 GPM. ____

   OR

   - **IF** 1LE4138 is one of the required RCS level indications,
     OR preparing for Vacuum Fill,
     THEN VERIFY SDC flow is approximately 1800 GPM. ____

3. **IF** RCS level is greater than 41 feet,
   THEN VERIFY SDC flow is approximately 3000 GPM. ____

4. **IF** SDC flow **CANNOT** be restored,
   THEN COMPLETE the following actions:

   a. **STOP** the operating LPSI Pump(s) ____

   b. **STOP** the RCS drain down. ____

   c. **IMPLEMENT** AOP-3B, Abnormal Shutdown Cooling Conditions. ____

D. **NOTIFY** Radiation Safety Supervision draining RCS to the RCDT and pumping to WPS. ____

E. Periodically **MONITOR** SFP level during the drain **AND** for 30 minutes after. ____

F. **PUMP** the RCDT until the RCDT Pump stops on low level. ____

DRAINING THE RCS VIA RCS DRAIN VALVES

NOTE
Use the lowest reading RCS level indicator as actual RCS level.

G. **IF** RCS level is above 41 feet,
THEN, using ATTACHMENT 4, REFUELING LEVEL CART INSTRUCTIONS,
SET the RCS low level alarms at 41 feet **OR** the target level, which ever is higher:

- 0CRT4136
  - 4136 Low Level Alarm Limit ____
  - 1LE4139 Low Level Alarm Limit ____
  - 1LT4140 Low Level Alarm Limit ____
- 0CRT4137
  - 4137 Low Level Alarm Limit ____
  - 1LE4139 Low Level Alarm Limit ____
  - 1LT4140 Low Level Alarm Limit ____

DRAINING THE RCS VIA RCS DRAIN VALVES

NOTE
The RCS Drain valves marked with an asterisk (*) are locked valves.

H. **OPEN OR UNLOCK AND OPEN** one or more sets of RCS Drain Valves:

- 11 HOT LEG DRN.....1-RC-107*
  11 HOT LEG DRN.....1-RC-108 ____

OR

- 11A COLD LEG DRN.....1-RC-111*
  11A COLD LEG DRN.....1-RC-112 ____

OR

- 11B COLD LEG DRN.....1-RC-113*
  11B COLD LEG DRN.....1-RC-114 ____

OR

- 12A COLD LEG DRN.....1-RC-115*
  12A COLD LEG DRN.....1-RC-116 ____

OR

- 12B COLD LEG DRN.....1-RC-117*
  12B COLD LEG DRN.....1-RC-118 ____

I. **PUMP** the RCDT as necessary to keep the RCDT High Level alarm clear. ____

DRAINING THE RCS VIA RCS DRAIN VALVES

NOTE

- Use the lowest reading RCS level indicator as actual RCS level.
- SDC flow rates greater than 2000 GPM will cause the indication provided by 1LE4138 to become erratic or non existent due to increasing amount of water turbulence in the hot leg.

J. **IF** draining the RCS to less than 41 foot elevation,
THEN WHEN the RCS has been drained to the lesser of two feet **OR** the target level using the lowest reading indicator,
THEN SHUT the RCS Drain valves used for the drain.

1. **WAIT** at least five minutes,
THEN COMPARE RCS level indications in use.

   a. **IF** the RCS level indications in use do **NOT** agree within 0.5 feet,
   THEN ALLOW additional time for the pressures to equalize. ____

   b. **IF** after 30 minutes the RCS level indications in use still do **NOT** agree within 0.5 feet,
   THEN REQUEST IM to investigate the discrepancies. ____

2. **WHEN** RCS level indications agree within 0.5 feet,
THEN OPEN the RCS Drain valves used previously to re-initiate draining. ____

3. **CONTINUE** to stop the drain and compare RCS level indication every two feet until the target RCS level is reached **PER** Step J. ____

DRAINING THE RCS VIA RCS DRAIN VALVES

NOTE
The RCS Drain valves marked with an asterisk (*) are locked valves.

K. **WHEN** the RCS is at the target level,
THEN SHUT OR LOCK SHUT the RCS Drain valves used for the drain:

- 11 HOT LEG DRN.....1-RC-107*
  11 HOT LEG DRN.....1-RC-108 ____

OR

- 11A COLD LEG DRN.....1-RC-111*
  11A COLD LEG DRN.....1-RC-112 ____

OR

- 11B COLD LEG DRN.....1-RC-113*
  11B COLD LEG DRN.....1-RC-114 ____

OR

- 12A COLD LEG DRN.....1-RC-115*
  12A COLD LEG DRN.....1-RC-116 ____

OR

- 12B COLD LEG DRN.....1-RC-117*
  12B COLD LEG DRN.....1-RC-118 ____

L. **ALLOW** a minimum of 5 minutes for RCS and Containment pressures to equalize. ____

NOTE
SDC flow rates greater than 2000 GPM will cause the indication provided by 1LE4138 to become erratic or non existent due to increasing amount of water turbulence in the hot leg.

M. **COMPARE** RCS level indications in use.

1. **IF** the RCS level indications in use do **NOT** agree within 0.5 feet,
   THEN ALLOW additional time for the pressures to equalize. ____

2. **IF** after 30 minutes the RCS level indications in use still do **NOT** agree within 0.5 feet,
   THEN REQUEST IM to investigate the discrepancies. ____

DRAINING THE RCS VIA RCS DRAIN VALVES

N. **NOTIFY** Radiation Safety Supervision draining is complete. ____

O. **NOTIFY** Outage Management to schedule Rep Task 10642090 to have Mechanical Maintenance cold torque the RCS Drain valves operated in this section. ____

P. This Appendix has been page checked against the LIST OF EFFECTIVE PAGES. **[M0002]**

____/_____
Init Date

REDUCED INVENTORY RESPONSIBILITY LIST

As the result of lessons learned from past reduced inventory evolutions, the requirements as listed in NO-1-103 will be in effect **AND** reviewed for all reduced inventory evolutions. **[B0328]**

- Acknowledge and accept responsibility to notify the Shift Outage Manager of any delays that occur or are expected to occur or any work that may be started that would keep the unit in a reduced inventory condition. This responsibility will be acknowledged and accepted by the Work Group Supervisors designated alternate during periods when the Work Group Supervisor is not on site.

WORK GROUP SUPERVISOR	SIGNATURE	DATE
GS-MM		
GS-E&C		
SUPERVISOR-RAD CON		
SUPERVISOR-ALARA		
PRIMARY SYSTEMS ENGINEERING		
BOP SYSTEMS ENGINEERING		
E&C SYSTEMS ENGINEERING		
WCU SUPERVISOR		
OUTAGE MANAGEMENT COORDINATOR		

OBTAIN final approval to enter reduced inventory:

- Shift Manager certifies **ALL** reduced inventory requirements are met.

_____/_____
SHIFT MANAGER DATE

- Approval to enter reduced inventory

_____/_____
GS-SO DATE

PLANS FOR QUICK RECOVERY OF RCS LEVEL [B0072]

DETAILED JOB DESCRIPTION:

_____

_____

_____

_____

_____

_____

_____

_____

_____

_____

_____

MO#_____ ETP#_____

STP#_____ OTHER_____

This detailed description of the job will be provided to **ALL** groups involved, designating the actions required if SDC **OR** RCS level indication is lost. As a minimum, this will include:

- Communications and the phone numbers as needed
- Names of individuals stationed in the work area who are responsible for the safe evacuation of the workers from the area
- Lead persons on the job
- The RCS water level band to be maintained when in reduced inventory operation to prevent flooding or loss of SDC

PLANS FOR QUICK RECOVERY OF RCS LEVEL [B0072]

NAMES OF DESIGNATED RADIATION SAFETY PERSONNEL TO CALL FOR EVACUATION:

NAME	SHIFT/DATE	PHONE NUMBER

APPROVALS:

_____/_____
RESPONSIBLE WORK GROUP GS DATE

_____/_____
RADIATION SAFETY SHIFT SUPERVISOR DATE

_____/_____
WCU SUPERVISOR DATE

_____/_____
SHIFT MANAGER DATE

_____/_____
GS-SO (for HPSI PP return to service) DATE

RCS/SDC PERTURBATION LOG [B0073] [B0138]

PERTURBATION:

_____

_____

_____

_____

SPECIAL PRECAUTIONS/ENHANCED MONITORING:

_____

_____

_____

_____

_____

_____

REVIEW AND APPROVAL:

_____/_____
SHIFT MANAGER DATE

PERTURBATION:

START:_____/_____
Date TIME

STOP:_____/_____
Date TIME

APPROVAL TO TERMINATE SPECIAL PRECAUTIONS/ENHANCED MONITORING:

_____/_____
SHIFT MANAGER DATE

PRESSURIZER MANWAY RE-INSTALLATION CHECKLIST [B0079]

NOTE
Use of this Appendix is directed by Maintenance procedure RCS-10 PRESSURIZER MANWAY COVER REMOVAL **AND** INSTALLATION.

A. This Appendix has been page checked against the LIST OF EFFECTIVE PAGES. **[M0002]**

_____/_____
Init Date

B. S/G nozzle dams are removed.

_____/_____
Init Date

C. **REVIEW** the Temporary Alteration Log **AND CHECK** that there are no outstanding items which require the Pressurizer manway removed.

_____/_____
Init Date

D. **REVIEW** the Procedure Controlled Plant Configuration Log (PC Log) **AND CHECK** that there are no outstanding items which require the Pressurizer manway removed.

_____/_____
Init Date

PRESSURIZER MANWAY RE-INSTALLATION CHECKLIST [B0079]

E. **VERIFY** RCS vent path **PER** Tech Spec 3.4.12 is available.

- **IF** PORVs are to be used as a RCS vent path, **THEN PERFORM** an Administrative Verification of PORV **AND** PORV Block valve operability as follows:

  - **REVIEW** the Temporary Alteration Log for items impacting PORV **OR** PORV Block valve operability.

    ____/____
    Init Date

  - **REVIEW** the Procedure Controlled Plant Configuration Log (PC Log) for items impacting PORV **OR** PORV Block valve operability.

    ____/____
    Init Date

  - **CHECK** STPs M-572A, M-572B and M-672B are current.

    E&C FSTC _____ DATE _____

  - **CHECK BOTH** Override Shut/Auto handswitches are in AUTO:

    ____/____
    Init Date

    - PORV 402 OVERRIDE.....1-HS-1402
    - PORV 404 OVERRIDE.....1-HS-1404

  - **CHECK BOTH** PORV handswitches in SINGLE MPT ENABLE:

    ____/____
    Init Date

    - PORV 402 MPT PROTECTION...1-HS-1406
    - PORV 404 MPT PROTECTION...1-HS-1408

  - **ENSURE BOTH** PORV Block Valves are fully open

    ____/____
    Init Date

F. **VERIFY** a RCS pressure alarm is active for Critical High Alarm Limit on computer point P103 and P103A and set at 250 PSIA.

____/____
Init Date

PRESSURIZER MANWAY RE-INSTALLATION CHECKLIST [B0079]

G. Adminstratively **VERIFY** the SDC Suction Isolation Valves, 1-SI-651-MOV and 1-SI-652-MOV, are capable of being shut from the Control Room.

_____/_____
Init Date

H. **ENSURE** the RCS mass addition HPSI tagout for LTOP control is hung.

_____/_____
Init Date

I. **ENSURE** inadvertent RCP start tagout for LTOP control is hung.

_____/_____
Init Date

J. **ENSURE** the Minimum Essential Equipment listed in NO-1-200, CONTROL OF SHIFT ACTIVITIES is available based on the availability of a S/G for heat removal. **[B0116]**

_____/_____
Init Date

K. This Appendix has been page checked against the LIST OF EFFECTIVE PAGES. **[M0002]**

_____/_____
Init Date

OBTAINING 1LT4138 READINGS USING OSCILLOSCOPE

1. **DETERMINE** the time between the intial wave pulse and the first water reflection signal.

2. **USE** table below to convert time to RCS level.

Time (msec)	Level (ft)	Time (msec)	Level (ft)	Time (msec)	Level (ft)
0.135	35.84	0.600	37.00	1.100	38.25
0.150	35.87	0.650	37.12	1.150	38.37
0.200	36.00	0.700	37.25	1.200	38.50
0.250	36.12	0.750	37.37	1.250	38.62
0.300	36.25	0.800	37.50	1.300	38.75
0.350	36.37	0.850	37.62	1.350	38.87
0.400	36.50	0.900	37.75	1.400	39.00
0.450	36.62	0.950	37.87	1.433	39.08
0.500	36.75	1.000	38.00		
0.550	36.87	1.050	38.12		

CALCULATION OF TIME TO BOIL

1. This Appendix has been page checked against the LIST OF EFFECTIVE PAGES. **[M0002]** ____

2. **CALCULATE** Time To Boil:

   a. **DETERMINE** the Time To Boil at 24 hours after shutdown from the appropriate figure, based on RCS level and RCS temperature: (N/A figures not used) ____

      - FIGURE 1, TIME TO START BOILING AFTER LOSS OF SDC, 24 HOURS AFTER SHUTDOWN ____
      - FIGURE 2, TIME TO START BOILING AFTER LOSS OF SDC, 24 HOURS AFTER SHUTDOWN WITH S/G TUBES FULL ____
      - FIGURE 5, RFP TIME TO BOIL AFTER LOSS OF SDC, 24 HOURS AFTER SHUTDOWN ____

   b. **OBTAIN** the multiplier from TABLE 3, TIME TO START BOILING OR CORE UNCOVERY MULTIPLIER, based on time after shutdown. ____

   c. **MULTIPLY** the Time To Boil at 24 hours after shutdown by the multiplier.

_____	X	_____	X	_____	=	_____
TTB at 24 hrs		multiplier		post refueling multiplier (IF applicable)		Time To Boil

   d. **INDEPENDENTLY VERIFY** the calculation. ____

CALCULATION OF TIME TO CORE UNCOVERY

1. This Appendix has been page checked against the LIST OF EFFECTIVE PAGES. **[M0002]** ____

2. **CALCULATE** Time To Core Uncovery:

   a. **DETERMINE** the Time To Core Uncovery at 24 hours after shutdown from the appropriate figure, based on RCS level and RCS temperature: (N/A figure not used) ____

      - FIGURE 3, TIME TO CORE UNCOVERY AFTER LOSS OF SDC, 24 HOURS AFTER SHUTDOWN, NO NOZZLE DAMS, NO INJECTION, NO COLD LEG HOLE ____

      - FIGURE 4, TIME TO CORE UNCOVERY AFTER LOSS OF SDC, 24 HOURS AFTER SHUTDOWN WITH NOZZLE DAMS, NO INJECTION, NO COLD LEG HOLE ____

   b. **OBTAIN** the multiplier from TABLE 3, TIME TO START BOILING OR CORE UNCOVERY MULTIPLIER, based on time after shutdown. ____

   c. **MULTIPLY** the Time To Boil at 24 hours after shutdown by the multiplier.

_____	X	_____	X	_____	=	_____
Time to Core Uncovery at 24 hrs		multiplier		post refueling multiplier (IF applicable)		Time To Core Uncovery

   d. **INDEPENDENTLY VERIFY** the calculation. ____

ESTABLISHING SAFE WORKING CONDITIONS FOR RCS MAINTENANCE [B0072]

A. **COMPLETE** APPENDIX 11, PLANS FOR QUICK RECOVERY OF RCS LEVEL.

B. **REQUEST** the responsible supervisors to provide detailed instructions to **ALL** personnel designated to carry out specific actions in APPENDIX 11.

C. **REQUEST** the following supervisors:

- Shift Manager
- Tagging Supervisor
- Radiation Safety
- Responsible work group GS (or designated alternate)

CONDUCT a pre-job briefing covering the following items **PER** NO-1-100, CONDUCT OF OPERATIONS:

- Scope of the job
- Placement of safety tags
- Additional Personnel Safety based on RCS temperature
- Communications
- Specific actions required and personnel designated to carry out those actions should a loss of SDC occur
- Methods for initiating prompt evacuation of personnel from areas in and around the openings of the RCS should SDC **OR** Reactor vessel level indication be lost
- Methods for returning a HPSI Pump to service (N/A if Reactor Vessel defueled)

D. **PROVIDE** a copy of APPENDIX 11 to **ALL** parties involved.

E. **REQUEST** that a pre-shift briefing be conducted to explain the requirements of this plan and the names of the designated individuals shall be jointly reviewed by the responsible maintenance group supervisor and the Radiation Safety Supervision representative prior to the start of the work on each shift.

F. **ENSURE** the name of the designated Maintenance Group Supervisor is provided to the Radiation Safety Supervisor.

G. At the Operations shift turnover meeting, the Radiation Safety Supervisor shall **ENSURE** that the Operations Shift Manager is supplied with the name of the person to contact if an evacuation is necessary.

- **IF** notified by Operations to evacuate the area, **THEN** the Radiation Safety Supervisor shall **ENSURE** that the Operations Shift Manager is informed when **ALL** personnel are evacuated.

ESTABLISHING SAFE WORKING CONDITIONS FOR RCS MAINTENANCE [B0072]

H. **PRIOR** to the start of work,
THEN the following work group supervisors shall indicate by their signature on APPENDIX 11, PLANS FOR QUICK RECOVERY OF RCS LEVEL, that they are satisfied with the actions taken for personnel and plant safety.

- Work Group GS
- RCSS
- Tagging Supervisor
- OPS Shift Manager

I. **IF** required to rack out **ALL** HPSI pump breakers to allow personnel to enter the RCS,
THEN ENSURE the breakers are tagged out **AND** a plan for restoring a HPSI Pump to service prior to Reactor core uncovery is included in APPENDIX 11. (N/A if Reactor Vessel defueled)

- **ENSURE** this written plan is approved by the Shift Manager, the GS-SO, and the appropriate individual from the associated work group (Supv-NME, GS-MM or PE).

J. To prevent personnel injury if an unexpected fast fill of the RCS were to occur, perform the following:

- **ISOLATE AND TAG ALL** sources of water greater than 50 GPM. (Guidance is provided in ATTACHMENT 2, GUIDELINES FOR THE REDUCED INVENTORY 50 GPM TAGOUT.)
- **ENSURE** a borated water source is available **PER** TRM 15.1.3. (N/A if Reactor Vessel defueled)
- **ENSURE** a plan for restoring a HPSI Pump to service prior to Reactor core uncovery is included in APPENDIX 11 **AND** is used each time the RCS level is tagged less than or equal to the 41 foot elevation for personnel protection (N/A if Reactor Vessel defueled)

GUIDELINES FOR THE REDUCED INVENTORY 50 GPM TAGOUT

NOTE

- This Attachment is only to be used as guidance and may be changed with the CRS concurrence.
- It is recommended to start hanging the <50 GPM tagout approximately one hour before the anticipated completion of the draindown (approximately three hours after entering reduced inventory if the S/G tubes are full).
- It is recommended to use red (Danger) tags on valves and breakers in the plant and yellow (Caution) tags on Control Room handswitches.

1. The following equipment should be tagged due to being sources of water of greater than 50 GPM.

CAUTION

There may be approximately 500 gallons of water in each SIT's outlet piping that is below the level transmitter's indicating range.

- Tag shut the SIT Outlet MOVs and breakers.
  (N/A SITs that indicate empty, **IF** an Engineering Evaluation has determined that a total 50 GPM flowrate would **NOT** be exceeded, based on elevation differences, **AND** the consequences of a change in RCS water level on Safety Tagging boundaries, radiation shielding affects, and overall inventory control have also been evaluated.
- Tag shut the SFP Cooling to RFP Inlet valves (N/A if the cavities are empty)
- Tag two of three charging PP breakers locked/disconnected and handswitches PTL; keep the boration flowpath PP untagged (if tags are hanging for the dilution/<90" tagout additional tags do not need to be hung for the 50 GPM tagout)
- Tag both CS PP discharge valves shut, and handswitches PTL.
- Tag shut the LPSI PP normal suction valves.

NOTE

13 HPSI PP should be used as the preferred water source. It is important to have the swing pump available for early reduced inventories since time to boil is so short. If the swing HPSI PP is not available, the available HPSI PP breaker must be disconnected or its discharge valve tagged shut.

- Tag 11 and 12 HPSI PP breakers locked/disconnected and handswitches PTL.

GUIDELINES FOR THE REDUCED INVENTORY 50 GPM TAGOUT

NOTE
It is recommended to tag 13 HPSI PP and the HPSI header MOVs last, after you have reached your destination level and stabilized for five minutes.

- Tag 13 HPSI PP handswitch in PTL and BOTH motor operated disconnect keyswitches locked open with keys removed. (Therefore power can be restored from the Control Room.)
- Tag both HPSI header MOVs shut using their keyswitches.

2. The following steps should be added to APPENDIX 11 for recovery of a HPSI PP, if 13 HPSI PP will be available:

   a. The CRS will verify personnel are clear of the RCS.

   b. The CRO will open the applicable HPSI header MOV.

   c. The CRO will shut the 13 HPSI motor operated disconnect.

   d. When directed by AOP-3B use the 13 HPSI PP as necessary to makeup to the RCS.

3. When Reduced inventory maintenance is complete, clear the running LPSI PP normal suction valve first to allow RCS refilling and timely exit from Reduced Inventory.

RCS FILL VALVE ALIGNMENT

VALVE NUMBER	VACUUM POSITION	INIT	DESCRIPTION	RESTORATION POSITION	INIT
1-RC-215	SHUT		PZR VENT ISOL	OPEN	
1-RC-216	SHUT		PZR VENT STOP	OPEN	
1-RC-276	SHUT		RX VSL VENT THROT	OPEN	
1-SI-699	SHUT		11A SIT CKV LKG CV-618 INLET ISOL VALVE	OPEN	
1-SI-700	SHUT		11B SIT CKV LKG CV-628 INLET ISOL VALVE	OPEN	
1-SI-701	SHUT		12A SIT CKV LKG CV-638 INLET ISOL VALVE	OPEN	
1-SI-702	SHUT		12B SIT CKV LKG CV-648 INLET ISOL VALVE	OPEN	
1-RC-133	SHUT		1-RC-150-FT INLET	OPEN	
1-RC-157	SHUT		1-RC-160-FT INLET	OPEN	
1-RC-181	SHUT		1-RC-170-FT INLET	OPEN	
1-RC-205	SHUT		1-RC-180-FT INLET	OPEN	
1-RC-100E-CV	OPEN		11A PZR SPRAY CV	AUTO	
1-RC-100F-CV	OPEN		11B PZR SPRAY CV	AUTO	
1-RC-403-MOV	SHUT		PORV 402 BLOCK	OPEN	
1-RC-405-MOV	SHUT		PORV 404 BLOCK	OPEN	
1-CVC-501-MOV	SHUT		VCT OUT	AUTO	
1-CVC-504-MOV	SHUT		RWT CHG PP SUCT	SHUT/AUTO	

REFUELING LEVEL CART INSTRUCTIONS

- **SWITCH KEYBOARD CONTROL OF DISPLAY SCREENS**

  a. **DEPRESS** Ctrl, Ctrl.

- **MLMS DENSITY COMPENSATION**

> **NOTE**
> The MLMS SETPOINT CHANGE LOG shall be completed when changing values.

  a. **OBTAIN** CRS authorization.

  b. IF required for keyboard control,
     THEN **SWITCH** display screens.

  c. **SELECT** the SYSTEM SETUP block.

  d. **MOVE** cursor to the RCS temperature field in the Compensation block.

  e. **ENTER** the desired value.

  f. **SELECT** the SAVE block to update the data.

  g. **INDEPENDENTLY VERIFY** the correct value has been entered.

- **ADJUST ALARM LIMIT SETPOINT**

> **NOTE**
> The MLMS SETPOINT CHANGE LOG shall be completed when changing values.

  a. **OBTAIN** CRS authorization.

  b. IF required for keyboard control,
     THEN **SWITCH** display screens.

  c. **SELECT** the SET ALARMS block.

  d. **MOVE** cursor to the desired field in the Alarm Limits block.

  e. **ENTER** the desired value.

  f. **REPEAT** Steps d. through e. for other alarms, as desired.

  g. **SELECT** the SAVE block to update the data.

  h. **INDEPENDENTLY VERIFY** the correct value(s) have been entered.

REFUELING LEVEL CART INSTRUCTIONS

- **CHANGE INSTRUMENT STATUS**

  a. **OBTAIN** CRS authorization.

  b. IF required for keyboard control,
     THEN **SWITCH** display screens.

  c. **SELECT** the SYSTEM SETUP block.

  d. **CHANGE** instrument status as desired.

  e. **SELECT** the SAVE block to update the data.

  f. **INDEPENDENTLY VERIFY** the desired instrument status.

- **CHANGE GRAPH SETUP**

  a. IF required for keyboard control,
     THEN **SWITCH** display screens.

  b. **SELECT** the GRAPH SETUP block.

  c. **SELECT** the desired selections.

  d. **SELECT** the SAVE block to update the data.

REFUELING LEVEL CART INSTRUCTIONS

MLMS SETPOINT CHANGE LOG

POINT	NEW VALUE	CRS AUTH (INIT)	CHANGED BY (INIT)	DATE	TIME	VERIFIED BY (INIT)

* Additional copies of this page may be used as necessary.

RCS LEVEL LOG

Readings should be recorded every 15 minutes.
(N/A readings **NOT** used)

DATE / TIME	1-LG-4139 OR tygon tube	4136	4137	1LE4138	1LE4139	1LT4140	OPERATING LPSI PP			
							SUCT PRESS	DISCH PRESS	AMPS	FLOW

* Additional copies of this page may be used as necessary.