CALVERT CLIFFS NUCLEAR POWER PLANT

UNIT ONE AND TWO

OI-35

RADIATION MONITORING SYSTEM

REVISION 31

SAFETY RELATED

MULTIPLE USE

Approval Authority: Kent Mills

Effective Date: 8/27/2010

TABLE OF CONTENTS

	TITLE	PAGE
1.0	PURPOSE	7
2.0	APPLICABILITY/SCOPE	7
3.0	REFERENCES	7
4.0	PREREQUISITES	7
5.0	PRECAUTIONS	8
6.0	SYSTEM OPERATION	9
6.1	SYSTEM STARTUP [CONTINUOUS USE]	9
6.2	NORMAL OPERATION [INFORMATION USE]	20
6.3	BYPASSING AND RESTORING RADIATION MONITORING SYSTEM ANNUNCIATORS [REFERENCE USE]	24
A.	Initial Conditions	24
B.	Bypassing A Radiation Monitoring System Annunciator	24
C.	Returning A Bypassed Alarm To Service	26
D.	Returning RMS To Service After A Loss Of Power	26
6.4	RADIATION MONITOR FUNCTIONAL TEST [CONTINUOUS USE]	27
A.	Initial Conditions	27
B.	Check Source	27
C.	Pulse Cal	28
D.	Level Cal	29
6.5	MAIN STEAM EFFLUENT RADIATION MONITOR [CONTINUOUS USE]	30
A.	Initial Conditions	30
B.	Startup	30
C.	Shutdown	31
D.	Keypad Operation	32

TABLE OF CONTENTS

TITLE		PAGE
E.	Check Source	33
F.	Channel Reset	34
6.6	N-16 MONITOR [CONTINUOUS USE]	35
A.	Initial Conditions	35
B.	Startup	35
C.	Shutdown	36
D.	Keypad Operation	37
6.7	CONTAINMENT RADIATION MONITOR [CONTINUOUS USE]	38
A.	Initial Conditions	38
B.	Placing Containment Radiation Monitor In Service	38
C.	Source Check	40
D.	High Alarm Check	42
E.	Containment Monitor Pump Switching	46
F.	Shutdown Of Containment Radiation Monitoring System Pumps	48
G.	Start Up	50
H.	Display History	53
I.	Purge	53
6.8	CONTAINMENT HIGH RANGE MONITORS [CONTINUOUS USE]	55
A.	Initial Conditions	55
B.	Placing The Containment High Range Monitor In Service	55
C.	Channel Check	55
D.	Functional Check	55
6.9	CONDENSER OFF-GAS RADIATION MONITOR [CONTINUOUS USE]	57

TABLE OF CONTENTS

TITLE		PAGE
A.	Initial Conditions	57
B.	Functional Test	57
C.	Channel(s) Out Of Service	58
D.	De-energizing and Re-energizing Condenser Off-Gas Radiation Monitor(s)	59
6.10	MAIN VENT RADIATION MONITOR [CONTINUOUS USE] [B0023]	61
A.	Initial Conditions	61
B.	Startup	61
C.	Shutdown	62
6.11	RMS PUMP OPERATION [CONTINUOUS USE]	63
6.12	RADIATION MONITOR INOPERABILITY [CONTINUOUS USE] [B0023]	70
6.13	SOURCE CHECK OF RI-4014 AND RIC-4095 FOR PE 0-77-3-O-M [CONTINUOUS USE]	72
6.14	CONTAINMENT AREA RADIATION MONITORS OPERATION [CONTINUOUS USE]	74
A.	Initial Conditions	74
B.	Shutdown	74
C.	Startup	75
6.15	REMOTE ATMOSPHERIC SAMPLES OF CONTAINMENT FOR AIR QUALITY [CONTINUOUS USE]	76
A.	Initial Conditions	76
6.16	PLACING A RADIATION MONITOR IN LEVEL CAL	78
6.17	RETURNING A RADIATION MONITOR TO SERVICE FROM LEVEL CAL	79
6.18	BLOWDOWN RECOVERY RADIATION MONITOR 1(2)-RIC-4095 [CONTINUOUS USE]	80

TABLE OF CONTENTS

TITLE			PAGE
	A.	Initial Conditions	80
	B.	Display History	80
	C.	Source Check	81
	D.	Alarm Bypass Operation	82
	E.	Shutdown	83
6.19	LIQUID WASTE DISCHARGE RADIATION MONITOR 0-RIC-2201 [CONTINUOUS USE]		84
	A.	Initial Conditions	84
	B.	Start Up	84
	C.	Display History	87
	D.	Clear History\Memory	87
	E.	Source Check	88
	F.	High Alarm Check	90
	G.	Alarm Bypass Operation	92
	H.	Shutdown	92
7.0	POST-PERFORMANCE ACTIVITIES		94
8.0	BASES		94
9.0	RECORDS		94
10.0	ATTACHMENTS		94

LIST OF EFFECTIVE PAGES

PAGES	REVISION
1-94	31

TABLE	REVISION
(1), Pgs1-6	31

ATTACHMENT	REVISION
(1A), Pgs 1-13 (1B), Pgs 1-14 (1C), Pgs 1-3 (1D), Pgs 1-6 (1E), Pg 1 (1F), Pg 1	31

PROCEDURE ALTERATIONS

PAGES	REV/CHG
16,19-22,30,34,35,39,59-60	03100

1.0 PURPOSE

A. The purpose of this procedure is to give a detailed description of the operation of the Radiation Monitoring System.

2.0 APPLICABILITY/SCOPE

A. This procedure will cover operation of the Radiation Monitoring System during startup, shutdown, normal operation, pump switching, and abnormal operation.

3.0 REFERENCES

3.1 DEVELOPMENT REFERENCES

A. Radiation Monitoring System Description Number 15.

B. Technical Manuals:

- Westinghouse Radiation Monitoring System, 12-733-75.
- Main Steam/N-16 Monitor NLM-100 (V1) Operation and Maintenance Manual, 12-733-400

C. Bechtel drawing Number OM-98 (60-738-E).

D. CCNPP Technical Specifications.

E. CNG-HU-1.01-1001, Human Performance Tools and Verification Practices.

F. Offsite Dose Calculation Manual (ODCM).

G. Technical Requirements Manual (TRM).

3.2 PERFORMANCE REFERENCES

A. Operating Instructions: OI-17B, OI-17C, OI-17D, and OI-22F.

B. CNG-NL-1.01-1004, Regulatory Reporting.

C. Emergency Response Plan Implementation Procedure (ERPIP).

D. CCNPP Technical Specifications.

E. Offsite Dose Calculation Manual (ODCM).

F. Technical Requirements Manual (TRM).

4.0 PREREQUISITES

A. Prerequisites will vary depending on the section of the procedure being performed. Prerequisites for each section will be listed at the beginning of the applicable section.

5.0 PRECAUTIONS

A. **IF** a radiation monitor's operability is in question,
THEN PERFORM the following:

1. **DECLARE** the monitor inoperable.
2. **MAKE** an entry in the Control Room Operators Log.
3. **CHECK** Table (1) for required actions.
4. **NOTIFY** Chemistry if a process and effluent monitor is inoperable.
5. **NOTIFY** Radiation Protection Supervision if an area monitor is inoperable.

B. **IF** a Radiation Monitoring System Alarm, in the opinion of the Shift Manager, represents a significant deviation from normal,
THEN a Radiological Event shall be declared in accordance with the Emergency Response Plan Implementation Procedure.

C. Offsite Dose Calculation Manual (ODCM) 3.3.3.9, 3.3.3.10, 3.11.1.1 and 3.11.2.1 must be complied with.

D. To prevent damaging the electronic circuitry, the Control Keyswitches for the Main Steam Line/N-16 Monitors (ADM Panels), must be placed in the OFF position, before shutting power supply breakers.

E. This procedure has been reviewed for Risk Based Verification Practices. No specific steps were identified. The SM, CRS, or any other person involved with the task may designate steps requiring the use of Verification Practices.

6.0 SYSTEM OPERATION

6.1 SYSTEM STARTUP [CONTINUOUS USE]

A. Initial Conditions

1. Valves and switches are aligned **PER** the Valve Lineup Sheets.
2. Power is available to 1C22 and 2C24B **PER** Attachment (1D).

B. Procedure

1. **START ALL** available Radiation Monitoring System Recorders.
2. **VERIFY** the ON/OFF button is depressed on the following RMSs:
   - 1(2)-RI-1752A
   - 1(2)-RI-1752B
   - 1(2)-RI-1752C
   - 1(2)-RI-1752D
3. **PERFORM** the following for 1(2)-RIC-4095:
   a. **OBTAIN** the U-1(2) Blowdown Recovery System RMS skid cabinet door key.
   b. **VERIFY** the AC Power Switch, CB1, on the back of 1(2)-RIC-4095 at 1C22G is in OFF.
   c. **INSERT** the key **AND OPEN** the U-1(2) Blowdown Recovery System RMS skid cabinet door.
   d. **VERIFY** the following on the U-1(2) Blowdown Recovery System RMS skid:
      - AC Power Module Switch inside the cabinet is in OFF
      - Power Disconnect Switch is in OFF
      - Pump Control handswitch is in OFF
      - Purge Control handswitch is in OFF
   e. **PLACE** the U-1(2) Blowdown Recovery System RMS skid Power Disconnect Switch in ON.

6.1.B.3 Procedure (Continued)

f. **PERFORM** the following on the U-1(2) Blowdown Recovery System RMS skid:

(1) **PLACE** the AC Power Module Switch inside the cabinet on the U-1(2) Blowdown Recovery System RMS skid in ON.

(2) **CLOSE** the U-1(2) Blowdown Recovery System RMS skid cabinet door **AND REMOVE** the key.

(3) **WHEN** the display screen has restored, **THEN PRESS** CURRENT ACTIVITY.

(4) **PRESS** SELECT.

(5) **HIGHLIGHT** Display Startup Info **AND PRESS** SELECT twice.

(6) **VERIFY** the board status for Channel 1 indicates Alive status.

(7) **PRESS** CURRENT ACTIVITY.

(8) **PRESS** SELECT.

(9) **VERIFY** the clock is incrementing.

(10) **HIGHLIGHT** Menus **AND PRESS** SELECT.

(a) **IF** Activate Monitor appears on the list, **THEN HIGHLIGHT** this item **AND PRESS** SELECT.

(11) **PRESS** CURRENT ACTIVITY.

(12) **PRESS** SELECT.

(13) **HIGHLIGHT** Display Status **AND PRESS** SELECT.

NOTE
The following are expected:

- Database Change
- Loop A Shutdown
- Loop B Shutdown

(14) **VERIFY** no indications of any abnormal conditions.

6.1.B.3.f **Procedure (Continued)**

(15) **PRESS** CURRENT ACTIVITY.

(16) **PRESS** SELECT.

(17) On the U-1(2) Blowdown Recovery System RMS skid, **PLACE** the Pump Control handswitch in AUTO **AND VERIFY** the sample pump does **NOT** start.

g. **PERFORM** the following on 1(2)-RIC-4095 at 1C22G:

(1) **PLACE** the AC Power Switch, CB1, on the back of 1(2)-RIC-4095 at 1C22G in ON.

(2) **WHEN** the display screen has restored, **THEN PRESS** CURRENT ACTIVITY.

(3) **PRESS** SELECT.

(4) **VERIFY** the clock is incrementing.

(5) **HIGHLIGHT** Display Status **AND PRESS** SELECT.

NOTE
The following are expected:

- Database Change
- Loop A Shutdown
- Loop B Shutdown

(6) **VERIFY** no indications of any abnormal conditions.

(7) **PRESS** CURRENT ACTIVITY.

(8) **PRESS** SELECT.

6.1.B Procedure (Continued)

4. **PERFORM** the following for 0-RIC-2201:

   a. **OBTAIN** the Liquid Waste Discharge RMS skid cabinet door key.

   b. **VERIFY** the AC Power Switch, CB1, on the back of 0-RIC-2201 at 1C22D is in OFF.

   c. **INSERT** the key **AND OPEN** the Liquid Waste Discharge RMS skid cabinet door.

   d. **VERIFY** the following on the Liquid Waste Discharge RMS skid:

      - AC Power Module Switch inside the cabinet is in OFF
      - Power Disconnect Switch is in OFF
      - Pump Control handswitch is in OFF
      - Purge Control handswitch is in OFF

   e. **PLACE** the Liquid Waste Discharge RMS skid Power Disconnect Switch in ON.

   f. **PERFORM** the following on the Liquid Waste Discharge RMS skid:

      (1) **PLACE** the AC Power Module Switch inside the cabinet on the Liquid Waste Discharge RMS skid in ON.

      (2) **CLOSE** the Liquid Waste Discharge RMS skid cabinet door **AND REMOVE** the key.

      (3) **WHEN** the display screen has restored, **THEN PRESS** CURRENT ACTIVITY.

      (4) **PRESS** SELECT.

      (5) **HIGHLIGHT** Display Startup Info **AND PRESS** SELECT twice.

      (6) **VERIFY** the board status for Channel 1 indicates Alive status.

      (7) **PRESS** CURRENT ACTIVITY.

      (8) **PRESS** SELECT.

      (9) **VERIFY** the clock is incrementing.

6.1.B.4.f **Procedure (Continued)**

(10) **HIGHLIGHT** Menus
AND PRESS SELECT.

(a) **IF** Activate Monitor appears on the list,
THEN HIGHLIGHT this item
AND PRESS SELECT.

(11) **PRESS** CURRENT ACTIVITY.

(12) **PRESS** SELECT.

(13) **HIGHLIGHT** Display Status
AND PRESS SELECT.

NOTE
The following are expected:

- Database Change
- Loop A Shutdown
- Loop B Shutdown

(14) **VERIFY** no indications of any abnormal conditions.

(15) **PRESS** CURRENT ACTIVITY.

(16) **PRESS** SELECT.

(17) On the Liquid Waste Discharge RMS skid, **PLACE** the Pump Control handswitch in AUTO **AND VERIFY** the sample pump does **NOT** start.

6.1.B.4 Procedure (Continued)

g. **PERFORM** the following on 0-RIC-2201 at 1C22D:

(1) **PLACE** the AC Power Switch, CB1, on the back of 0-RIC-2201 at 1C22D in ON.

(2) **WHEN** the display screen has restored, **THEN PRESS** CURRENT ACTIVITY.

(3) **PRESS** SELECT.

(4) **VERIFY** the clock is incrementing.

(5) **HIGHLIGHT** Display Status **AND PRESS** SELECT.

NOTE
The following are expected:

- Database Change
- Loop A Shutdown
- Loop B Shutdown

(6) **VERIFY** no indications of any abnormal conditions.

(7) **PRESS** CURRENT ACTIVITY.

(8) **PRESS** SELECT.

(9) **VERIFY** 0HS2201B / S1 - OPER BYPASS key switch, in the ON position.

(a) **CHECK** the BYPASS STATUS light is lit.

NOTE
- RMS VLV INTERLOCK ACTUATED Light will remain lit due to no sample flow.
- RMS VLV INTERLOCK RESET is pressed to clear the High Alarm that was actuated when 0-RIC-2201 was energized.

(10) **DEPRESS** RMS VLV INTERLOCK RESET, 0-HS-2201B/S3. ____

6.1.B Procedure (Continued)

5. **PERFORM** the following for 1(2)-RIC-5280:

   a. **OBTAIN** the Containment RMS skid cabinet door key.

   b. **VERIFY** the AC Power Switch, CB1, on the back of 1(2)-RIC-5280 at 1C22G is in OFF.

   c. **INSERT** the key **AND OPEN** the Containment RMS skid cabinet door.

   d. **VERIFY** the following on the Containment RMS skid:

      - AC Power Module Switch inside the cabinet is in OFF
      - Power Disconnect Switch is in OFF
      - Pump Control handswitch is in OFF
      - Purge Control handswitch is in OFF

   e. **PLACE** the Containment RMS skid Power Disconnect Switch in ON.

   f. **PERFORM** the following on the Containment RMS skid:

      (1) **PLACE** the AC Power Module Switch inside the cabinet on the Containment RMS skid in ON.

      (2) **CLOSE** the Containment RMS skid cabinet door **AND REMOVE** the key.

      (3) **WHEN** the display screen has restored, **THEN PRESS** CURRENT ACTIVITY.

      (4) **PRESS** SELECT.

      (5) **HIGHLIGHT** Display Startup Info **AND PRESS** SELECT twice.

      (6) **VERIFY** the board status for Channel 1 and Channel 2 indicates Alive status.

      (7) **PRESS** CURRENT ACTIVITY.

      (8) **PRESS** SELECT.

      (9) **VERIFY** the clock is incrementing.

      (10) **HIGHLIGHT** Menus **AND PRESS** SELECT.

         (a) **IF** Activate Monitor appears on the list, **THEN HIGHLIGHT** this item **AND PRESS** SELECT.

6.1.B.5.f **Procedure (Continued)**

(11) **PRESS** CURRENT ACTIVITY.

(12) **PRESS** SELECT.

(13) **HIGHLIGHT** Display Status **AND PRESS** SELECT.

NOTE
The following are expected:

- Database Change
- Loop A Shutdown
- Loop B Shutdown

(14) **VERIFY** no indications of any abnormal conditions.

(15) **PRESS** CURRENT ACTIVITY.

(16) **PRESS** SELECT.

(17) On the Containment RMS skid, **PLACE** the Pump Control handswitch in AUTO **AND VERIFY** the sample pump does **NOT** start.

NOTE

- The Heat Tracing control box is mounted on the back side of the 1(2)-RE-5280/5281 skid.
  The control box has a lamp on it indicating that the heat trace is ON.
- At each skid there is a power distribution panel 1PNL1P95 (2PNL2P95).
  Breaker #3 provides power to 1(2)-RE-5280 HEAT TRACE.

03100

(18) **ENSURE** the Containment Atmosphere Sample Line, 1(2)-RE-5280 HEAT TRACE is energized, as follows: 03100

(a) **VERIFY** 1PNL1P95 (2PNL2P95), Breaker #3 is ON.

(b) **CHECK** the control box lamp is illuminated.

6.1.B.5 Procedure (Continued)

g. **PERFORM** the following on 1(2)-RIC-5280 at 1C22G:

(1) **PLACE** the AC Power Switch, CB1, on the back of 1(2)-RIC-5280 at 1C22G in ON.

(2) **WHEN** the display screen has restored, **THEN PRESS** CURRENT ACTIVITY.

(3) **PRESS** SELECT.

(4) **VERIFY** the clock is incrementing.

(5) **HIGHLIGHT** Display Status **AND PRESS** SELECT.

NOTE
The following are expected:

- Database Change
- Loop A Shutdown
- Loop B Shutdown

(6) **VERIFY** no indications of any abnormal conditions.

(7) **PRESS** CURRENT ACTIVITY.

(8) **PRESS** SELECT.

6. **ALLOW** system to warm up for 30 minutes.

NOTE

- The fuse holder will illuminate when a fuse is blown or removed.
- 1(2)-RI-5316-A through D are normally out of service with the fuses removed during power operation.

7. **CHECK** monitors for a blown fuse during warm up.

6.1.B Procedure (Continued)

8. **CHECK** for proper operating voltages, for each of the following monitors being started, as follows:

   a. **PLACE** the Range Selector Switch in the H.V. position.

Area Monitor Channels should read approximately 550 VDC.			
1(2)-RI-5316A	1(2)-RI-5316B	1(2)-RI-5316C	1(2)-RI-5316D
1(2)-RI-7004	1(2)-RI-7005	1(2)-RI-7006	0-RI-7027
1(2)-RI-7010	1(2)-RI-7011	1(2)-RI-7012	0-RI-7016
0-RI-7017	0-RI-7018	0-RI-7019	0-RI-7020
0-RI-7021	0-RI-7022	0-RI-7023	0-RI-7024
0-RI-7025	0-RI-7026		
Radio Gas Channels should read approximately 950 VDC.			
0-RI-2191	0-RI-5425	1(2)-RI-5406	1(2)-RI-5410
1(2)-RI-5415	0-RI-5350	0-RI-5420	
Liquid and Air Particle Channels should read approximately 1400 VDC.			
1(2)-RI-1595	1(2)-RI-3819	1(2)-RI-4014	

   b. **PLACE** the Range Selector Switch in the WIDE position.

9. **CHECK** for proper operating voltages, for each of the following monitors being started, as follows:

   a. Momentarily **PRESS** the HV button.

Radio Gas Channels should read 650-1300 VDC.			
1(2)-RI-1752A	1(2)-RI-1752B	1(2)-RI-1752C	1(2)-RI-1752D

6.1.B Procedure (Continued)

NOTE

- The Operability of a Radiation Monitor is **NOT** dependent on trend recorder indication. 03100
- **IF** trend recorder indication is **NOT** in agreement with the Rad Monitor, a Condition Report should be initiated.

10. **CHECK** meter indication in agreement with the associated recorder. 03100

11. **IF** maintenance was performed on **ANY** monitor,
THEN PERFORM a functional test on the affected monitor.

****** END ******

6.2 NORMAL OPERATION [INFORMATION USE]

A. Initial Conditions

1. Radiation monitors are in operation.

B. Channel Checks

NOTE

1(2)-RI-5316-A through D are normally out of service with the fuses removed during power operation.

1. **ENSURE** the following as applicable:

   Operation Selector Switch in the OPERATE position.

   Range Selector Switch in the WIDE position.

   Proper meter indication by one of the following:

NOTE

- The Operability of a Radiation Monitor is **NOT** dependent on trend recorder indication.
- **IF** trend recorder indication is **NOT** in agreement with the Rad Monitor, a Condition Report should be initiated.

03100

- **CHECK** meter indication in agreement with the associated recorder. 03100

OR

- **IF** performing channel checks on 1(2)-RI-5316A through D, **THEN** by qualitative assessment of the meter indication.

OR

NOTE

- The recorder point 1(2)-RE-1752A-D is based on the highest of 1(2)-RI-1752A through D.
- Readings on 1(2)-RI-1752A through D will vary based on running pumps, air inleakage, activity levels etc.

- **IF** performing channel checks on 1(2)-RI-1752A through D, **THEN** by qualitative assessment of the meter indication.

6.2.B.1 Channel Checks (Continued)

- Alarm Bypass Switch unbypassed **OR** noted in the Control Room Operators Daily Log **AND** the Alarm Annunciator Log, if bypassed.

- **IF** performing channel checks on 1(2)-RI-5316A through D,
  THEN VERIFY the associated ESFAS Sensor Bypass keys are removed.
  [B0630]

- **IF** performing channel check on 1(2)-RIC-4095,
  THEN:

  - **CHECK** the CH 1 green OPER LED is lit

  - **ENSURE** 1(2)HS4095B / S2 - HIGH BYPASS key switch, is in the OFF position

NOTE

- The Operability of a Radiation Monitor is **NOT** dependent on trend recorder indication.
- **IF** trend recorder indication is **NOT** in agreement with the Rad Monitor, a Condition Report should be initiated.

03100

  - **CHECK** meter indication in agreement with the associated recorder. 03100

  - **ENSURE** the 1C22H Alarm Bypass Switch is unbypassed, **OR** is noted in the Control Room Operators Daily Log **AND** the Alarm Annunciator Log, if bypassed

- **IF** performing channel check on 0-RIC-2201,
  THEN:

  a. At 0-RIC-2201 on 1C22D, **IF** Current Activity Channel 1 is **NOT** displayed,
     THEN PERFORM the following:

     (1) **PRESS** CURRENT ACTIVITY.

     (2) **PRESS** SELECT.

  b. **HIGHLIGHT** Display Status
     AND PRESS SELECT.

6.2.B.1 Channel Checks (Continued)

NOTE
The following are expected on the Display Status Display

- Database Change
- Loop A Shutdown
- Loop B Shutdown

c. **VERIFY** the following off normal conditions:

- No Sample Flow
- No Channel Flow
- Mon Operate Fail

d. **PRESS** CURRENT ACTIVITY.

e. **PRESS** SELECT.

f. **ENSURE** expected background is displayed.

g. **ENSURE** the 1C22H Alarm Bypass Switch is unbypassed, **OR** is noted in the Control Room Operators Daily Log **AND** the Alarm Annunciator Log, if bypassed.

- **IF** performing channel check on 1(2)-RIC-5280, **THEN**:
  - **CHECK** the CH 1 green OPER LED is lit
  - **CHECK** the CH 2 green OPER LED is lit

NOTE
- The Operability of a Radiation Monitor is **NOT** dependent on trend recorder indication. 03100
- **IF** trend recorder indication is **NOT** in agreement with the Rad Monitor, a Condition Report should be initiated.

- **CHECK** meter indication in agreement with the associated recorder. 03100
- **ENSURE** the 1C22H Alarm Bypass Switch is unbypassed, **OR** is noted in the Control Room Operators Daily Log **AND** the Alarm Annunciator Log, if bypassed

6.2.B Channel Checks (Continued)

2. **IF** a radiation monitor is out of service,
THEN REFER to Section 6.12, RADIATION MONITOR INOPERABILITY [B0023] of this OI.

****** END ******

C. Saturated Area RMS Detector

NOTE
This section may only be used for an area RMS determined to be saturated.

1. **DETERMINE** that the area RMS is saturated using the following:

   - Off-scale high indication with NO detectable previous upward trend (i.e., instantaneous full scale indication).
   - Detector will **NOT** reset the alarm condition by placing the OPERATE Selector Switch to **RESET** and back to **OPERATE**.

2. **IF** the detector is saturated,
THEN PERFORM the following:

   a. **PLACE** the OPERATE Selector Switch to RESET.

   b. **REMOVE** one of the RMS fuses located on the front of the saturated RMS drawer.

3. **AFTER** approximately 5 seconds, **REINSTALL** the removed fuse.

4. **PLACE** the OPERATE Selector Switch to OPERATE.

5. **PERFORM** a channel check **PER** Section B., Channel Checks.

6. **ENSURE** a Condition Report has been submitted for trending purposes.

****** END ******

6.3 BYPASSING AND RESTORING RADIATION MONITORING SYSTEM ANNUNCIATORS [REFERENCE USE]

A. Initial Conditions

1. Radiation monitors are in operation.

B. Bypassing A Radiation Monitoring System Annunciator

NOTE

Bypassed radiation monitors require increased monitoring to ensure radiation levels **DO NOT** change significantly.

1. **IF** the Radiation Monitoring System Alarm is due to a failed or degraded detector,
   THEN PERFORM the following:

   a. **OBTAIN** Control Room Supervisor permission to bypass the alarm.

NOTE

A red lamp indicates that the Radiation Monitor Alarm is bypassed. An amber lamp indicates an alarm condition.

   b. **DEPRESS** the BYPASS pushbutton.

   c. **LOG** the bypassed alarm on the U-1 Control Room Operators Miscellaneous log book.

   d. **REFER** to Section 6.12, RADIATION MONITOR INOPERABILITY [B0023] of this OI.

6.3.B Bypassing A Radiation Monitoring System Annunciator (Continued)

2. **IF** a valid alarm condition exists,
   THEN PERFORM the following:

   a. **NOTIFY** the following:

      - Shift Manager.
      - Control Room Supervisor.
      - Chemistry, if applicable.
      - Radation Protection Supervision, if applicable.

   b. **EVALUATE** the alarm **PER** the RADIOLOGICAL EVENT section of the Emergency Response Plan Implementation Procedure.

   c. **OBTAIN** Control Room Supervisor permission to bypass the alarm.

> **NOTE**
> A red lamp indicates that the Radiation Monitor Alarm is bypassed. An amber lamp indicates an alarm condition.

   d. **DEPRESS** the associated Bypass Pushbutton.

   e. **LOG** the bypassed alarm on the U-1 Control Room Operators Miscellaneous log book.

   f. **IF** a radiation monitor is out of service,
      THEN REFER to Section 6.12, RADIATION MONITOR INOPERABILITY [B0023] of this OI.

   g. **REQUEST** local monitoring, if necessary.

****** END ******

6.3 BYPASSING AND RESTORING RADIATION MONITORING SYSTEM ANNUNCIATORS [REFERENCE USE] (Continued)

C. Returning A Bypassed Alarm To Service

1. **WHEN** the alarm condition has cleared,
   THEN PERFORM the following:

   a. **PLACE** the Operation Selector Switch in the RESET position.

   b. **PLACE** the Operation Selector Switch in the OPERATE position.

   c. **DEPRESS** the associated Bypass Pushbutton.

   d. **CHECK** that the amber and red lamps are extinguished.

   e. **LOG** in the U-1 Control Room Operators Miscellaneous log book that the alarm is returned to service.

   f. **NOTIFY** Chemistry and Radiation Protection Supervision, as applicable.

****** END ******

D. Returning RMS To Service After A Loss Of Power

1. **WHEN** Power has been restored to the RMS,
   THEN PERFORM the following:

   a. **PLACE** the Operation Selector Switch in the RESET position.

   b. **PLACE** the Operation Selector Switch in the OPERATE position.

   c. **IF** the associated radiation monitor was bypassed,
      THEN DEPRESS the associated Bypass Pushbutton.

   d. **CHECK** that the amber and red lamps are extinguished.

   e. **PERFORM** functional test per Section 6.4, RADIATION MONITOR FUNCTIONAL TEST.

****** END ******

6.4 RADIATION MONITOR FUNCTIONAL TEST [CONTINUOUS USE]

A. Initial Conditions

CAUTION
Failure to follow the applicable procedure will actuate the automatic functions of the following radiation monitors.

1. The following channels will **NOT** be tested using this OI; the following procedures shall be used to complete Functional Testing of these channels:

• RI-2191	OI-17B
• RIC-2201	OI-17C
• RI-5316A, B, C, D	STP-O-60-1(2)
• RI-5421, 5422	STP-M-215-1(2)
• RIC-5415	STP-O-99-1(2)
• RI-5350	STP-O-72-0
• RI-4014, RIC-4095	STP-O-104-1(2)

2. Condenser Off-Gas RMS channels, 1(2)-RI-1752A through D, will **NOT** be tested using this Section; Section 6.9, CONDENSER OFF-GAS RADIATION MONITOR shall be used to complete Functional Testing of these channels.

3. Radiation monitors are in operation.

B. Check Source

1. **PLACE** the Operation Selector Switch in the CHECK SOURCE position.

2. **CHECK** channel response **AND** recorder operation as follows:

   a. The meter **INDICATES** a positive meter deflection above background. **[B0060]**

   b. The recorder point **INDICATES** an increase corresponding to the increased reading of the meter indication.

6.4.B Check Source (Continued)

3. **IF** a qualitative assessment of channel response can **NOT** be determined for an Area RMS,
THEN PERFORM the following:

   a. **COMPARE** RMS reading to actual radiation levels in the area monitored by the RMS being tested. **[B0591]**

      - **IF** the RMS reading and actual radiation levels in the area are **NOT** approximately equal,
        THEN REFER to Section 6.12, RADIATION MONITOR INOPERABILITY [B0023].

   b. **PERFORM** a Pulse Cal on the RMS.

      - **IF** the RMS fails the Pulse Cal,
        THEN REFER to Section 6.12, RADIATION MONITOR INOPERABILITY [B0023].

   c. **PERFORM** a Level Cal on the RMS.

      - **IF** the RMS fails the Level Cal,
        THEN REFER to Section 6.12, RADIATION MONITOR INOPERABILITY [B0023].

   d. **IF** steps 3.a, 3.b, and 3.c are SAT,
      THEN CONSIDER the Check Source SAT.

4. **IF** a qualitative assessment of channel response can **NOT** be determined for a Process RMS,
THEN REFER to Section 6.12, RADIATION MONITOR INOPERABILITY [B0023].

****** END ******

C. Pulse Cal

1. **PLACE** the Operation Selector Switch in the PULSE CAL position.

2. **ENSURE** local and remote meters indicate as follows:

   - Process Radiation Monitors indicate approximately 10^5 CPM (7.1×10^4 to 1.4×10^5).

   - Area Radiation Monitors indicate approximately 1 R/hr (7.1×10^{-1} to 1.4×10^0).

3. **IF** meter indication is higher than the alarm setpoint,
THEN ENSURE the local and remote high alarms (Audible and Visual) are received.

4. **PLACE** the Operation Selector Switch in the RESET position.

6.4.C Pulse Cal (Continued)

5. **PLACE** the Operation Selector Switch in the OPERATE position.

****** END ******

D. Level Cal

1. **PLACE** the Operation Selector Switch in the LEVEL CAL position.

2. **ENSURE** local and remote meters indicate as follows:

   - Process Radiation Monitors indicate approximately 100 CPM (7.1×10^1 to 1.4×10^2).

   - Area Radiation Monitors indicate approximately 1mR/hr (7.1×10^{-4} to 1.4×10^{-3}).

3. **PLACE** the Operation Selector Switch in the RESET position.

4. **PLACE** the Operation Selector Switch in the OPERATE position.

5. **IF** performing PE 0-77-1-0-SA,
   THEN SIGN OFF the applicable blocks.

****** END ******

6.5 MAIN STEAM EFFLUENT RADIATION MONITOR [CONTINUOUS USE]

A. Initial Conditions

NONE

B. Startup

NOTE
ADM-616 is located on the north wall of the CSR on Unit 1, and on the south wall of the CSR on Unit 2.

1. **PERFORM** the following at the ADM-616 cabinet located in the CSR:

   a. **OPEN** the ADM-616 cabinet **AND** **VERIFY** the ON/OFF toggle switch is in the ON position.

NOTE
Placing the keyswitch to ON will begin a program boot process that includes a self diagnostic check of the monitor.

   b. **INSERT** key into panel keyswitch **AND** turn switch to the ON position.

   c. **MOMENTARILY DEPRESS** the RESET pushbutton. 03100

   d. **VERIFY** the NORMAL light energizes.

   e. **MOMENTARILY DEPRESS** the TEST pushbutton to lamp check Control Panel lights.

6.5.B Startup (Continued)

2. **PERFORM** the following at the ADM-606 cabinet located in Control Room:

> **NOTE**
> Placing the keyswitch to ON will begin a program boot process that includes a self diagnostic check of the monitor.

a. **INSERT** key into panel keyswitch **AND** turn switch to the ON position.

b. **VERIFY** the NORMAL light energizes.

c. **MOMENTARILY DEPRESS** the TEST pushbutton to lamp check Control Panel lights.

d. **DEPRESS** MODE pushbutton until Alert setpoint is displayed and take note of value.

e. **DEPRESS** MODE pushbutton until High setpoint is displayed and take note of value.

f. **ENSURE** correct setpoints, High and Alert, are entered by comparison with Setpoint Book.

g. Use the MODE key to monitor any functions on the display screen.

3. **VERIFY** recorder 1-RR-5420 (2-RR-5420) is in operation.

4. **IF** monitor is in alarm,
THEN PRESS the RESET pushbutton.

5. **CHECK** "MAIN STM EFFL RAD MON 2C26" alarm clear on 1C03 (2C03).

6. **IF** a Main Steam Radiation Monitor is declared inoperable,
THEN REFER to Section 6.12, RADIATION MONITOR INOPERABILITY [B0023] of this OI.

****** END ******

C. Shutdown

1. Refer to TRM 15.3.1.

2. **INSERT** key into keyswitch at the ADM-606 panel located in Control Room, **AND** turn switch to OFF.

6.5.C Shutdown (Continued)

NOTE
ADM-616 is located on the north wall of the CSR on Unit 1, and on the south wall of the CSR on Unit 2.

3. **INSERT** key into keyswitch at the ADM-616 panel located in CSR, **AND** turn switch to OFF.

****** END ******

D. Keypad Operation

1. **PLACE** the keyswitch to the KEYPAD position.

NOTE
The following is a list of functions that can be adjusted:

- HIGH alarm setpoint
- ALERT alarm setpoint
- Setting Time and Date
- Setting Auto Check Source time

2. **PRESS** MODE pushbutton until desired function is displayed.
3. **PRESS** the SET pushbutton while viewing the present function.
4. **DEPRESS** the Up Arrow pushbutton to toggle through the available values until the desired value is reached.

NOTE
Alarm setpoints must be controlled **PER** the Setpoint file.

5. **PRESS** the SET pushbutton to save the value.
6. **REPEAT** steps 2 through 5 until values for all functions are entered.
7. **PRESS** the RESET pushbutton to return to the default screen.
8. **PLACE** the keyswitch in the ON position.

****** END ******

6.5 MAIN STEAM EFFLUENT RADIATION MONITOR [CONTINUOUS USE] (Continued)

E. Check Source

NOTE
Test will also test the N-16 indications

1. **PRESS** the CHECK SOURCE pushbutton.

2. **VERIFY** display indicates "Check Source Active" and an upscale reading on the ratemeters and chart recorder.

3. **VERIFY** after 2 minutes, that the Check Source disengages and the ratemeters return to normal.

4. **IF** monitor is in alarm,
   THEN PRESS the RESET pushbutton.

5. **VERIFY** the following:

   - All alarms clear.

   - Corresponding indication on chart recorder, 1-RR-5420 (2-RR-5420), returns to normal indication.

****** END ******

6.5 MAIN STEAM EFFLUENT RADIATION MONITOR [CONTINUOUS USE] (Continued)

F. Channel Reset

NOTE

- The following steps will reset the monitor if it is inoperable following either a power restoration, **OR** exposure to low ambient temperature. 03100
- ADM-616 is located on the north wall of the CSR on Unit 1, and on the south wall of the CSR on Unit 2.

1. **PERFORM** the following at the ADM-616 cabinets located in the CSR: 03100
2. **MOMENTARILY DEPRESS** the RESET pushbutton on the ADM 616 for ONE affected channel. 03100

   a. UNIT 1 CSR:

   - 11 MAIN STEAM EFF RAD MONITOR, 1-RIT-5421
   - 12 MAIN STEAM EFF RAD MONITOR, 1-RIT-5422

   OR

   b. UNIT 2 CSR: 03100

   - 21 MAIN STEAM EFF RAD MONITOR, 2-RIT-5421
   - 22 MAIN STEAM EFF RAD MONITOR, 2-RIT-5422

3. **VERIFY** the white Operate Lamp on the ADM 616 illuminates. 03100
4. **IF** the white Operate Lamp fails to illuminate after the RESET pushbutton has been depressed, 03100
   THEN the channel cannot be reset.

   a. **DECLARE** the channel out of service **AND REFER** to Section 6.12, RADIATION MONITOR INOPERABILITY [B0023]

   b. **ENSURE** a Condition Report is initiated.

5. **REPEAT** the above steps if desired, for another channel. 03100

****** END ******

6.6 N-16 MONITOR [CONTINUOUS USE]

A. Initial Conditions

1. Reactor Regulating System in operation.

B. Startup

NOTE
ADM-616 is located on the north wall of the CSR on Unit 1, and on the south wall of the CSR on Unit 2.

1. **PERFORM** the following at the ADM-616 cabinet located in the CSR:

   a. **OPEN** the ADM-616 cabinet **AND VERIFY** the ON/OFF toggle switch is in the ON position.

NOTE
Placing the keyswitch to ON will begin a program boot process that includes a self diagnostic check of the monitor.

   b. **INSERT** key into panel keyswitch **AND TURN** to the ON position.

   c. **MOMENTARILY DEPRESS** the RESET pushbutton. 03100

   d. **VERIFY** white NORMAL light energizes.

   e. **MOMENTARILY DEPRESS** the TEST pushbutton to lamp check Control Panel lights.

6.6.B Startup (Continued)

2. **PERFORM** the following at the ADM-606 cabinet located in Control Room:

> **NOTE**
> Placing the keyswitch to ON will begin a program boot process that includes a self diagnostic check of the monitor.

a. **INSERT** key into panel keyswitch **AND** turn switch to the ON position.

b. **VERIFY** white NORMAL light energizes.

c. **MOMENTARILY DEPRESS** the TEST pushbutton to lamp check Control Panel lights.

d. **DEPRESS** MODE pushbutton until Alert setpoint is displayed and take note of value.

e. **DEPRESS** MODE pushbutton until High setpoint is displayed and take note of value.

f. **ENSURE** correct setpoints, High and Alert, are entered by comparison with the Setpoint Book.

g. **USE** the MODE key to monitor any functions on the display screen.

3. **VERIFY** recorder 1-RR-5420 (2-RR-5420) is in operation.

4. **IF** monitor is in alarm,
THEN PRESS the RESET pushbutton.

5. **CHECK** "MAIN STM N-16 RAD MON 2C26" alarm clear on 1C03 (2C03).

> **NOTE**
> N-16 monitor should be used for determining S/G tube leakage (GPD) above 50% power, as indicated by Reactor Regulating System. Below 50% power, N-16 monitor may indicate 0.00 GPD leakrate.

6. **IF** N-16 monitor is OOS,
THEN NOTIFY Plant Chemistry and Radiation Protection Supervision of OOS equipment, **AND SUBMIT** a Condition Report.

****** END ******

C. Shutdown

1. **INSERT** key into keyswitch at the ADM-606 panel located in Control Room, **AND TURN** to the OFF position.

6.6.C Shutdown (Continued)

2. **INSERT** key into keyswitch at the ADM-616 panel located in CSR, **AND TURN** to the OFF position.

****** END ******

D. Keypad Operation

1. **PLACE** the keyswitch to the KEYPAD position.

NOTE
The following is a list of functions that can be adjusted:

- Core Age
- HIGH alarm setpoint
- ALERT alarm setpoint
- Setting Time and Date

2. **PRESS** MODE pushbutton until desired function is displayed.
3. **PRESS** the SET pushbutton while viewing the present function.
4. **DEPRESS** the Up Arrow pushbutton to toggle through the available values until the desired value is reached.

NOTE
Alarm setpoints must be controlled **PER** the Setpoint file.

5. **PRESS** the SET pushbutton to save the value.
6. **REPEAT** steps 2 through 5 until all values are entered.
7. **PRESS** the RESET pushbutton to return to the default screen.
8. **PLACE** the keyswitch in the ON position.

****** END ******

6.7 CONTAINMENT RADIATION MONITOR [CONTINUOUS USE]

A. Initial Conditions

1. The Containment Purge system must be secured prior to starting sample pumps for Containment Radiation Monitoring System (RMS) to prevent clogging of the Containment RMS Filter. The monitors served are required operable only in Modes 1 through 4.

B. Placing Containment Radiation Monitor In Service

1. **ENSURE OPEN** the following CNTMT RMS ISOL valves:
   - 1(2)-CRM-5291-CV
   - 1(2)-CRM-5292-CV
2. **ALIGN** one Sample Pump:
   a. **ALIGN** 11 Sample Pump for service as follows:
      (1) **ENSURE OPEN** CNTMT ATMOS PP 11 SUCT, 1-CRM-5.
      (2) **ENSURE OPEN** CNTMT ATMOS PP 11 DISCH, 1-CRM-12.
      (3) **ENSURE SHUT** CNTMT ATMOS PP 12 SUCT, 1-CRM-6.
      (4) **ENSURE SHUT** CNTMT ATMOS PP 12 DISCH, 1-CRM-13.
      (5) **ENSURE** 1-HS-5280/S3 is in the PUMP 1 position.
   b. **ALIGN** 12 Sample Pump for service as follows:
      (1) **ENSURE OPEN** CNTMT ATMOS PP 12 SUCT, 1-CRM-6.
      (2) **ENSURE OPEN** CNTMT ATMOS PP 12 DISCH, 1-CRM-13.
      (3) **ENSURE SHUT** CNTMT ATMOS PP 11 SUCT, 1-CRM-5.
      (4) **ENSURE SHUT** CNTMT ATMOS PP 11 DISCH, 1-CRM-12.
      (5) **ENSURE** 1-HS-5280/S3 is in the PUMP 2 position.
   c. **ALIGN** 21 Sample Pump for service as follows:
      (1) **ENSURE OPEN** CNTMT ATMOS PP 21 SUCT, 2-CRM-5.
      (2) **ENSURE OPEN** CNTMT ATMOS PP 21 DISCH, 2-CRM-12.
      (3) **ENSURE SHUT** CNTMT ATMOS PP 22 SUCT, 2-CRM-6.
      (4) **ENSURE SHUT** CNTMT ATMOS PP 22 DISCH, 2-CRM-13.
      (5) **ENSURE** 2-HS-5280/S3 is in the PUMP 1 position.

6.7.B.2 Placing Containment Radiation Monitor In Service (Continued)

d. **ALIGN** 22 Sample Pump for service as follows:

(1) **ENSURE OPEN** CNTMT ATMOS PP 22 SUCT, 2-CRM-6.

(2) **ENSURE OPEN** CNTMT ATMOS PP 22 DISCH, 2-CRM-13.

(3) **ENSURE SHUT** CNTMT ATMOS PP 21 SUCT, 2-CRM-5.

(4) **ENSURE SHUT** CNTMT ATMOS PP 21 DISCH, 2-CRM-12.

(5) **ENSURE** 2-HS-5280/S3 is in the PUMP 2 position.

3. On 1(2)-NP-5280, **PERFORM** the following:

a. **ENSURE** 1(2)-HS-5280/S2 is in AUTO.

b. **ENSURE** 1(2)-HS-5280/S4 is in OFF.

c. **ENSURE** 1(2)-HS-5280/S5 is in AUTO.

NOTE

- The Heat Tracing control box is mounted on the back side of the 1(2)-RE-5280/5281 skid.
  The control box has a lamp on it indicating that the heat trace is ON.
- At each skid there is a power distribution panel 1PNL1P95 (2PNL2P95).
  Breaker #3 provides power to 1(2)-RE-5280 HEAT TRACE.

03100

4. **ENSURE** the Containment Atmosphere Sample Line, 1(2)-RE-5280 HEAT TRACE is energized, as follows: 03100

a. **VERIFY** 1PNL1P95 (2PNL2P95), Breaker #3 is ON.

b. **CHECK** the control box lamp is illuminated.

6.7.B Placing Containment Radiation Monitor In Service (Continued)

5. At 1(2)-RIC-5280 on 1C22G, **PERFORM** the following:

   a. **ENSURE** Sampler Selector Switch, 1(2)-HS-5278, in the OPEN CNTMNT position.

   b. **IF** Current Activity Channel 1 or 2 is **NOT** displayed, **THEN PERFORM** the following:

      (1) **PRESS** CURRENT ACTIVITY.

      (2) **PRESS** SELECT.

   c. **HIGHLIGHT** Pump Control **AND PRESS** SELECT twice.

      (1) **CHECK** Sample Pump starts.

   d. **PRESS** CURRENT ACTIVITY.

****** END ******

C. Source Check

1. **IF** Source Check for 1(2)-RE-5281, **THEN PERFORM** the following:

   a. AT 1(2)-RIC-5280 on 1C22G, **VERIFY** the CH 1 green OPER LED is lit.

   b. **PRESS** CURRENT ACTIVITY.

   c. **PRESS** SELECT.

   d. **PRESS** Channel Select Next/Prev until Detailed Current Activity Channel 1 is displayed.

   e. **HIGHLIGHT** Start Check Source **AND PRESS** SELECT twice.

> **NOTE**
> When the Check Source is activated, the Current Activity freezes at the last detected dose rate and the current countrate of the checksource is displayed. No alarms or actuations will occur.

   f. **VERIFY** Check Source In Progress is displayed.

6.7.C.1 Source Check (Continued)

NOTE
Checksource takes approximately 1 minute.

g. **WHEN** the Check Source is complete,
THEN PRESS CURRENT ACTIVITY.

h. **CHECK** the CH 1 green OPER LED is lit.

NOTE
A failed Source Check is indicated by a the OPER LED **NOT** lit.

- **IF** the Source Check fails,
THEN REFER to OI-35, Section titled, RADIATION MONITOR INOPERABILITY for alternative monitoring requirements.

2. **IF** Source Check for 1(2)-RE-5280,
THEN PERFORM the following:

a. AT 1(2)-RIC-5280 on 1C22G, **VERIFY** the CH 2 green OPER LED is lit.

b. **PRESS** CURRENT ACTIVITY.

c. **PRESS** SELECT.

d. **PRESS** Channel Select Next/Prev until Detailed Current Activity Channel 2 is displayed.

e. **HIGHLIGHT** Start Check Source
AND PRESS SELECT twice.

NOTE
When the Check Source is activated, the Current Activity freezes at the last detected dose rate and the current countrate of the checksource is displayed. No alarms or actuations will occur.

f. **VERIFY** Check Source In Progress is displayed.

6.7.C.2 Source Check (Continued)

NOTE Checksource takes approximately 1 minute.

g. **WHEN** the Check Source is complete,
THEN PRESS CURRENT ACTIVITY.

h. **CHECK** the CH 2 green OPER LED is lit.

NOTE A failed Source Check is indicated by a the OPER LED **NOT** lit.

- **IF** the Source Check fails,
THEN REFER to OI-35, Section titled,
RADIATION MONITOR INOPERABILITY for alternative monitoring requirements.

****** END ******

D. High Alarm Check

1. **IF** High Alarm Check for 1(2)-RE-5280,
THEN PERFORM the following:

   a. **ENSURE** bypass pushbutton for 1(2)-RIC-5280 on 1C22H is in normal.

   b. At 1(2)-RIC-5280, **PLACE** the NORMAL/SUPERVISOR keyswitch to SUPV.

   c. **IF** Current Activity Channel 2 is **NOT** displayed,
   THEN PERFORM the following:

      (1) **PRESS** CURRENT ACTIVITY.

      (2) **PRESS** SELECT.

      (3) **PRESS** Channel Select Next/Prev until Detailed Current Activity Channel 2 is displayed.

   d. **HIGHLIGHT** Menus
   AND PRESS SELECT.

   e. **HIGHLIGHT** Display/Modify Database
   AND PRESS SELECT.

   f. **HIGHLIGHT** Channel Items
   AND PRESS SELECT.

6.7.D.1 High Alarm Check (Continued)

g. **NOTE** Setpoint, High Alarm, setting.

- Setting _____

h. **HIGHLIGHT** Setpoint High Alarm **AND PRESS** SELECT.

i. **SET** Setpoint, High Alarm, to a value of 5.00 E+00 **AND PRESS** SELECT.

j. **PERFORM** the following:

(1) **CHECK** for the following:

- 1(2)-RIC-5280 RMS STATUS PNL, 1C22H, amber light (alarm)
- 1C17 "RAD MON PANEL 1C22" annunciator alarms
- Red High LED on Channel 2 is lit

(2) **IF** any alarm in Step 1.j.1 does not acuate, **THEN REFER** to OI-35, Section titled, RADIATION MONITOR INOPERABILITY.

k. **IF** Channel Items is **NOT** displayed, **THEN PERFORM** the following:

(1) **PRESS** CURRENT ACTIVITY.

(2) **PRESS** SELECT.

(3) **PRESS** Channel Select Next/Prev until Detailed Current Activity Channel 2 is displayed.

(4) **HIGHLIGHT** Menus **AND PRESS** SELECT.

(5) **HIGHLIGHT** Display/Modify Database **AND PRESS** SELECT.

(6) **HIGHLIGHT** Channel Items **AND PRESS** SELECT.

l. **HIGHLIGHT** Setpoint High Alarm **AND PRESS** SELECT.

m. **SET** Setpoint, High Alarm, to setting noted in Step 1.g **AND PRESS** SELECT.

6.7.D.1 High Alarm Check (Continued)

n. **PERFORM** the following:

(1) **CHECK** for the following:

- 1(2)-RIC-5280 RMS STATUS PNL, 1C22H, amber light clears
- 1C17 "RAD MON PANEL 1C22" annunciator clears
- Red High LED on Channel 2 is extinguished

(2) **IF** any alarm in Step 1.n.1 does not clear, **THEN REFER** to OI-35, Section titled, RADIATION MONITOR INOPERABILITY.

o. At 1(2)-RIC-5280, **PLACE** the NORMAL/SUPERVISOR keyswitch to NORM.

p. **PRESS** the Current Activity button.

2. **IF** High Alarm Check for 1(2)-RE-5281, **THEN PERFORM** the following:

a. **ENSURE** bypass pushbutton for 1(2)-RIC-5280 on 1C22H is in normal.

b. At 1(2)-RIC-5280, **PLACE** the NORMAL/SUPERVISOR keyswitch to SUPV.

c. **IF** Current Activity Channel 1 is **NOT** displayed, **THEN PERFORM** the following:

(1) **PRESS** CURRENT ACTIVITY.

(2) **PRESS** SELECT.

(3) **PRESS** Channel Select Next/Prev until Detailed Current Activity Channel 1 is displayed.

d. **HIGHLIGHT** Menus **AND PRESS** SELECT.

e. **HIGHLIGHT** Display/Modify Database **AND PRESS** SELECT.

f. **HIGHLIGHT** Channel Items **AND PRESS** SELECT.

6.7.D.2 High Alarm Check (Continued)

g. **NOTE** Setpoint, High Alarm, setting.

- Setting _____

h. **HIGHLIGHT** Setpoint High Alarm **AND PRESS** SELECT.

i. **SET** Setpoint, High Alarm, to a value of 5.00 E+00 **AND PRESS** SELECT.

j. **PERFORM** the following:

(1) **CHECK** for the following:

- 1(2)-RIC-5280 RMS STATUS PNL, 1C22H, amber light (alarm)
- 1C17 "RAD MON PANEL 1C22" annunciator alarms
- Red High LED on Channel 1 is lit

(2) **IF** any alarm in Step 2.j.1 does not acuate, **THEN REFER** to OI-35, Section titled, RADIATION MONITOR INOPERABILITY.

k. **IF** Channel Items is **NOT** displayed, **THEN PERFORM** the following:

(1) **PRESS** CURRENT ACTIVITY.

(2) **PRESS** SELECT.

(3) **PRESS** Channel Select Next/Prev until Detailed Current Activity Channel 1 is displayed.

(4) **HIGHLIGHT** Menus **AND PRESS** SELECT.

(5) **HIGHLIGHT** Display/Modify Database **AND PRESS** SELECT.

(6) **HIGHLIGHT** Channel Items **AND PRESS** SELECT.

l. **HIGHLIGHT** Setpoint High Alarm **AND PRESS** SELECT.

m. **SET** Setpoint, High Alarm, to setting noted in Step 2.g **AND PRESS** SELECT.

6.7.D.2 High Alarm Check (Continued)

n. **PERFORM** the following:

(1) **CHECK** for the following:

- 1(2)-RIC-5280 RMS STATUS PNL, 1C22H, amber light clears
- 1C17 "RAD MON PANEL 1C22" annunciator clears
- Red High LED on Channel 1 is extinguished

(2) **IF** any alarm in Step 2.n.1 does not clear,
THEN REFER to OI-35, Section titled, RADIATION MONITOR INOPERABILITY.

o. At 1(2)-RIC-5280, **PLACE** the NORMAL/SUPERVISOR keyswitch to NORM.

p. **PRESS** the Current Activity button.

****** END ******

E. Containment Monitor Pump Switching

1. At 1(2)-RIC-5280 on 1C22G, **IF** Current Activity Channel 1 or 2 is **NOT** displayed,
THEN PERFORM the following:

a. **PRESS** CURRENT ACTIVITY.

b. **PRESS** SELECT.

2. **HIGHLIGHT** Pump Control
AND PRESS SELECT twice.

a. **CHECK** Sample Pump stops.

6.7.E Containment Monitor Pump Switching (Continued)

3. **SHUT** the CNTMT ATMOS PP SUCT **AND** CNTMT ATMOS PP DISCH valves for the pump that was in service:

- 11 pump:
  - CNTMT ATMOS PP 11 SUCT, 1-CRM-5
  - CNTMT ATMOS PP 11 DISCH, 1-CRM-12
- 12 pump:
  - CNTMT ATMOS PP 12 SUCT, 1-CRM-6
  - CNTMT ATMOS PP 12 DISCH, 1-CRM-13
- 21 pump:
  - CNTMT ATMOS PP 21 SUCT, 2-CRM-5
  - CNTMT ATMOS PP 21 DISCH, 2-CRM-12
- 22 pump:
  - CNTMT ATMOS PP 22 SUCT, 2-CRM-6
  - CNTMT ATMOS PP 22 DISCH, 2-CRM-13

6.7.E Containment Monitor Pump Switching (Continued)

4. **OPEN** the CNTMT ATMOS PP SUCT **AND** CNTMT ATMOS PP DISCH valves for the pump that was not being used:

   - 11 pump:
     - CNTMT ATMOS PP 11 SUCT, 1-CRM-5
     - CNTMT ATMOS PP 11 DISCH, 1-CRM-12
   - 12 pump:
     - CNTMT ATMOS PP 12 SUCT, 1-CRM-6
     - CNTMT ATMOS PP 12 DISCH, 1-CRM-13
   - 21 pump:
     - CNTMT ATMOS PP 21 SUCT, 2-CRM-5
     - CNTMT ATMOS PP 21 DISCH, 2-CRM-12
   - 22 pump:
     - CNTMT ATMOS PP 22 SUCT, 2-CRM-6
     - CNTMT ATMOS PP 22 DISCH, 2-CRM-13

5. **SWITCH** power to the pump that was not running by using CNTMT ATMOS SMPL PP TRANSFER SWITCH, 1(2)-HS-5280/S3.

6. At 1(2)-RIC-5280 on 1C22G, **HIGHLIGHT** Pump Control **AND PRESS** SELECT twice.

   a. **CHECK** Sample Pump starts.

****** END ******

F. Shutdown Of Containment Radiation Monitoring System Pumps

1. **IF** a Containment Radiation Monitor is taken out of service, **THEN REFER** to the Section 6.12, RADIATION MONITOR INOPERABILITY [B0023] of this OI.

2. At 1(2)-RIC-5280 on 1C22G, **IF** Current Activity Channel 1 or 2 is **NOT** displayed, **THEN PERFORM** the following:

   a. **PRESS** CURRENT ACTIVITY.

   b. **PRESS** SELECT.

6.7.F Shutdown Of Containment Radiation Monitoring System Pumps (Continued)

3. **HIGHLIGHT** Pump Control
   AND PRESS SELECT twice.

   a. **CHECK** Sample Pump stops.

4. **SHUT** the following CNTMT RMS ISOL valves:

   - 1(2)-CRM-5291-CV
   - 1(2)-CRM-5292-CV

5. **IF** desired to shutdown the Containment Radiation Monitor Skid,
   THEN PERFORM the following:

   a. **OBTAIN** the Containment RMS skid cabinet door key.

   b. On the Containment RMS skid, **PLACE** the Pump Control handswitch in OFF.

   c. **INSERT** the key **AND OPEN** the Containment RMS skid cabinet door.

   d. **VERIFY** the AC Power Module Switch inside the cabinet on the Containment RMS skid is OFF.

   e. **CLOSE** the Containment RMS skid cabinet door **AND REMOVE** the key.

   f. **VERIFY** the AC Power Switch, CB1, on the back of 1(2)-RIC-5280 at 1C22G is OFF.

   g. **PLACE** the Containment RMS skid Power Disconnect Switch in OFF.

****** END ******

6.7 CONTAINMENT RADIATION MONITOR [CONTINUOUS USE] (Continued)

G. Start Up

1. **OBTAIN** the Containment RMS skid cabinet door key.

2. **VERIFY** the AC Power Switch, CB1, on the back of 1(2)-RIC-5280 at 1C22G is in OFF.

3. **INSERT** the key **AND OPEN** the Containment RMS skid cabinet door.

4. **VERIFY** the following on the Containment RMS skid:

   - AC Power Module Switch inside the cabinet is in OFF
   - Power Disconnect Switch is in OFF
   - Pump Control handswitch is in OFF
   - Purge Control handswitch is in OFF

5. **PLACE** the Containment RMS skid Power Disconnect Switch in ON.

6. **PERFORM** the following on the Containment RMS skid:

   a. **PLACE** the AC Power Module Switch inside the cabinet on the Containment RMS skid in ON.

   b. **CLOSE** the Containment RMS skid cabinet door **AND REMOVE** the key.

   c. **WHEN** the display screen has restored, **THEN PRESS** CURRENT ACTIVITY.

   d. **PRESS** SELECT.

   e. **HIGHLIGHT** Display Startup Info **AND PRESS** SELECT twice.

   f. **VERIFY** the board status for Channel 1 indicates Alive status.

   g. **PRESS** CURRENT ACTIVITY.

   h. **PRESS** SELECT.

   i. **VERIFY** the clock is incrementing.

   j. **HIGHLIGHT** Menus **AND PRESS** SELECT.

      (1) **IF** Activate Monitor appears on the list, **THEN HIGHLIGHT** this item **AND PRESS** SELECT.

6.7.G.6 Start Up (Continued)

k. **PRESS** CURRENT ACTIVITY.

l. **PRESS** SELECT.

m. **HIGHLIGHT** Display Status
AND PRESS SELECT.

NOTE
The following are expected:

- Database Change
- Loop A Shutdown
- Loop B Shutdown

n. **VERIFY** no indications of any abnormal conditions.

o. **PRESS** CURRENT ACTIVITY.

p. **PRESS** SELECT.

6.7.G Start Up (Continued)

7. **PERFORM** the following on 1(2)-RIC-5280 at 1C22G:

   a. **PLACE** the AC Power Switch, CB1, on the back of 1(2)-RIC-5280 at 1C22G in ON.

   b. **WHEN** the display screen has restored, **THEN PRESS** CURRENT ACTIVITY.

   c. **PRESS** SELECT.

   d. **VERIFY** the clock is incrementing.

   e. **HIGHLIGHT** Display Status **AND PRESS** SELECT.

NOTE
The following are expected:

- Database Change
- Loop A Shutdown
- Loop B Shutdown

   f. **VERIFY** no indications of any abnormal conditions.

   g. **PRESS** CURRENT ACTIVITY.

   h. **PRESS** SELECT.

****** END ******

6.7 CONTAINMENT RADIATION MONITOR [CONTINUOUS USE] (Continued)

H. Display History

1. **HIGHLIGHT** Menus
   AND PRESS SELECT.

2. **HIGHLIGHT** Display/Clear History
   AND PRESS SELECT.

3. **HIGHLIGHT** Display History
   AND PRESS SELECT.

4. **HIGHLIGHT** the desired history:

   - 1 Minute
   - 10 Minute
   - Hourly
   - Daily

   AND PRESS SELECT.

5. **WHEN** complete,
   THEN PRESS CURRENT ACTIVITY.

****** END ******

I. Purge

NOTE
1(2)-RIC-5280 will be inoperable during the purge.

1. **REFER** to the Section 6.12, RADIATION MONITOR INOPERABILITY [B0023] of this OI.

2. **ENSURE** 1(2)-RIC-5280 is secured **PER** Section 6.7, CONTAINMENT RADIATION MONITOR Section F., Shutdown Of Containment Radiation Monitoring System Pumps.

3. **UNCAP** Purge Air Inlet.

4. **OPEN** CNTMT AIR PART DET PURGE INLET ISOL, 1(2)-CRM-3.

5. **PLACE** SAMPLE SELECTOR Switch, 1(2)-HS-5278 to the OPEN VENT Positon.

6.7.I Purge (Continued)

6. At 1(2)-RIC-5280, **HIGHLIGHT** Menus **AND PRESS SELECT**.

NOTE
Automatic flush timer set to 2 minutes.

7. **HIGHLIGHT** START PURGE **AND PRESS** SELECT twice.

8. **HIGHLIGHT** Pump Control **AND PRESS** SELECT twice.

   a. **CHECK** Sample Pump starts.

9. **WHEN** Purge secures **THEN PERFORM** the following:

   a. **IF** Sample Pump is running **THEN HIGHLIGHT** Pump Control **AND PRESS** SELECT twice.

      (1) **CHECK** Sample Pump stops.

   b. **PLACE** SAMPLE SELECTOR Switch, 1(2)-HS-5278 to the OPEN CNTMNT Positon.

   c. **CAP** Purge Air Inlet.

   d. **SHUT** CNTMT AIR PART DET PURGE INLET ISOL, 1(2)-CRM-3.

   e. At 1(2)-RIC-5280, **PRESS** the Current Activity button.

10. **IF** desired Place the Containment Radiation Monitor is service **PER** Section B., Placing Containment Radiation Monitor In Service.

****** END ******

6.8 CONTAINMENT HIGH RANGE MONITORS [CONTINUOUS USE]

A. Initial Conditions

NONE

B. Placing The Containment High Range Monitor In Service

1. **CHECK** the Three Position Switch in the OPERATE position.

2. **CHECK** the green OPERATE light is illuminated.

3. **IF** the green OPERATE light deenergizes due to system failure, loss of power, input signal, or high voltage,
   THEN momentarily **DEPRESS** the green operate light to reset.

> **NOTE**
> Normal reading should be approximately 1 R/hr.

4. **IF** one of the two monitors for a unit are declared inoperable,
   THEN REFER to Section 6.12, RADIATION MONITOR INOPERABILITY [B0023] of this OI.

****** END ******

C. Channel Check

1. **ENSURE** the Operate Selector Switch is in the OPERATE position.

2. **ENSURE** Trip 1 **AND** Trip 2 lights deenergize.

3. **ENSURE** the readings are $\leq 2 \times 10^0$ R/hr on 1(2)-RI-5317A **AND** 1(2)-RI-5317B.

4. **ENSURE** Green Operate Light is illuminated.

****** END ******

D. Functional Check

> **NOTE**
> Placing the OP SEL SW for any Containment High Range Monitor in CHECK will shut the associated Cntmt Vent/H_2 Purge valves.

1. **PLACE AND HOLD** the Operate Selector Switch in the CHECK position.

2. **ENSURE** the Trip 1 **AND** Trip 2 alarm lights illuminate.

6.8.D Functional Check (Continued)

3. **ENSURE** the meter deflects to approximately $1x10^5$.

4. **ENSURE** the "CNTMT RAD LVL HI" alarm is received on 1(2)C10.

5. **PLACE** the Operate Selector Switch in the OPERATE position.

6. **PLACE** the Operate Selector Switch in the TRIP ADJUST position **AND** hold.

7. **RESET** the Trip 1 **AND** Trip 2 alarm lights by **DEPRESSING** their lighted pushbutton.

8. **PLACE** the Operate Selector Switch in the OPERATE position.

9. **ENSURE** the following:

   - Trip 1 **AND** Trip 2 alarm lights deenergize.
   - Green Operate light is on.
   - "CNTMT RAD LVL HI" alarm on 1(2)C10 is clear.
   - Indicated radiation level is approximately 1R/hr.

****** END ******

6.9 CONDENSER OFF-GAS RADIATION MONITOR [CONTINUOUS USE]

A. Initial Conditions

NONE

B. Functional Test

NOTE
The recorder should **NOT** respond to a channel check source.

1. **NOTE** the channel indicated value.
2. **PRESS AND HOLD** the CHECK SOURCE button.
3. **CHECK** the CHECK SOURCE light is lit.
4. **ENSURE** the display trends to **AND** stabilizes between 8.00 E3 and 1.20 E4 CPM.
5. **ENSURE** associated alarm is received.
6. **RELEASE** the CHECK SOURCE button.
7. **ENSURE** the following:
   - The CHECK SOURCE light is extinguished
   - The channel indicated value returns to approximately that noted in Step 1
   - Alarm clears
8. **REPEAT** steps 1 through 7 for each channel as required.

****** END ******

6.9 CONDENSER OFF-GAS RADIATION MONITOR [CONTINUOUS USE] (Continued)

C. Channel(s) Out Of Service

NOTE
The Condenser Off-Gas RMS is **NOT** required to be declared OOS when an individual channel is OOS, so long as the individual OOS channel is **NOT** in the flow path.

1. **WHEN** a Condenser Off-Gas RMS channel is declared out of service, **OR** is to be taken out of service for maintenance or testing,
   THEN PERFORM the following:

   a. **VERIFY** that at least one in-service Condenser Off-Gas radiation channel is monitoring the suction of an in-service pump.

   b. **IF** the suction of all in-service CAR Pumps are not being monitored,
      THEN

      - **CHANGE** the configuration of the CAR Pumps per OI-13, Condenser Air Removal System, so that at least one suction line is being monitored.

      OR

      - **DECLARE** the Condenser Off-Gas RMS OOS, **AND PERFORM** actions **PER** Section 6.12, RADIATION MONITOR INOPERABILITY [B0023].

   c. **NOTIFY** the System Engineer.

   d. **TRACK** the OOS RMS channel, **AND** the CAR PP required secured on the Shift Turnover sheet.

****** END ******

6.9 CONDENSER OFF-GAS RADIATION MONITOR [CONTINUOUS USE] (Continued)

D. De-energizing and Re-energizing Condenser Off-Gas Radiation Monitor(s)

NOTE

- Condenser Off-Gas (COG) Radiation Monitors are turned off during Radiography in the Turbine Building. There is a concern that exposure of the RMS's to the radiography source will over-saturate and damage the monitors. 03100
- The only plant response expected for de-energizing the COG RMS's is a 1C22 alarm.
- The Condenser Off-Gas RMS is **NOT** required to be declared OOS when an individual channel is OOS, so long as the individual OOS channel is **NOT** in the flow path.
- The following step may credit the N-16 Monitors for primary to secondary leakage detection. If the N-16 Monitors are **OR** become inoperable, further sampling guidance is provided in CP-0236, SPECIFICATION AND SURVEILLANCE PRIMARY TO SECONDARY LEAKS.

1. **PERFORM** the following to de-energize the desired COG RMS's: 03100

   a. **ENSURE** Section C., Channel(s) Out Of Service has been completed.

   b. **POSITION** the OFF/ON pushbutton for the desired Unit 1 COG Radiation Monitor(s) to the OFF(OUT) position:

      - 1-RI-1752A
      - 1-RI-1752B
      - 1-RI-1752C
      - 1-RI-1752D

   OR

   c. **POSITION** the OFF/ON pushbutton for the desired Unit 2 COG Radiation Monitor(s) to the OFF(OUT) position: 03100

      - 2-RI-1752A
      - 2-RI-1752B
      - 2-RI-1752C
      - 2-RI-1752D

6.9.D **De-energizing and Re-energizing Condenser Off-Gas Radiation Monitor(s) (Continued)**

2. **PERFORM** the following to energize the desired COG RMS's: 03100

   a. **POSITION** the OFF/ON pushbutton for the desired Unit 1 COG Radiation Monitor(s) to the ON(IN) position:

      - 1-RI-1752A
      - 1-RI-1752B
      - 1-RI-1752C
      - 1-RI-1752D

   OR

   b. **POSITION** the OFF/ON pushbutton for the desired Unit 2 COG Radiation Monitor(s) to the ON(IN) position: 03100

      - 2-RI-1752A
      - 2-RI-1752B
      - 2-RI-1752C
      - 2-RI-1752D

   c. **PERFORM** a Functional Test of the COG RMS's that were energized, **PER** Section 6.9.B.

   d. **NOTIFY** Plant Chemistry of COG RMS status.

****** END ******

6.10 MAIN VENT RADIATION MONITOR [CONTINUOUS USE] [B0023]

A. Initial Conditions

1. ODCM Controls 3.3.3.9 and 3.11.2.1 have been reviewed.

NOTE
This section directs the operation of the Main Vent Radiation Monitor only. The Main Vent Tritium / Particulate Samplers are controlled by Plant Chemistry.

B. Startup

1. **ENSURE** the following:

   a. Operation Selector Switch in the OPERATE position.

   b. Range Selector Switch in the WIDE position.

   c. Sampler Selector Switch in the VENT position.

   d. Paper Drive Selector Switch in the OFF position.

2. **PLACE** the Pump Power Switch in the START position.

3. **WHEN** the pump ON light illuminates,
   THEN RELEASE the Pump Power Switch **AND ENSURE** the switch returns to the LOCAL position.

6.10.B Startup (Continued)

4. **IF** a high or low flow alarm is received,
   THEN PERFORM the following:

   a. **PLACE** the Pump Power Switch in the REMOTE position.

> **NOTE**
> The High Pressure Switch will spring return to the OPERATE position.

   b. **IF** the high pressure alarm is present,
      THEN RESET the alarm by placing the High Pressure Switch in the RESET position.

   c. **PLACE AND HOLD** the Main Vent Monitor Pump Handswitch S1, Local Start Stop Switch, in the START position.

> **NOTE**
> It may be necessary to adjust flow while holding Handswitch S1, Local Start Stop Switch, in the **START** position.

   d. **IF** detector flow rate is **NOT** 10 SCFM,
      THEN THROTTLE MAIN VENT GAS DET INL, 1(2)-RE-5414-P, to obtain 10 SCFM flow.

   e. **PLACE** the Pump Power Switch in the START position.

   f. **WHEN** the pump ON light illuminates,
      THEN PLACE the Pump Power Switch in the LOCAL position.

5. **ENSURE** "MAIN VENT RADIATION MONITOR" alarm on 1C26 is clear.

****** END ******

C. Shutdown

1. **IF** the Main Vent Radiation Monitor is secured,
   THEN REFER to Section 6.12, RADIATION MONITOR INOPERABILITY [B0023] of this OI.

2. **PLACE** the Pump Power Switch in the STOP position.

****** END ******

6.11 RMS PUMP OPERATION [CONTINUOUS USE]

A. Initial Conditions

NONE

B. Startup

1. **IF** desired to startup SRW Radiation Monitor,
   THEN PERFORM the following:

   a. **ENSURE OPEN** SRW RMS INL, 1(2)-RE-1595-H.

   b. **ENSURE OPEN** SRW RMS PP DISCH, 1(2)-RE-1595-I.

   c. **ENSURE SHUT** SRW RMS FIS-1595 BYPASS 1(2)-RE-1595-J.

   d. **ENSURE OPEN** FIS-1595 INLET 1(2)-RE-1595-L.

   e. **THROTTLE OPEN** FIS-1595 OUTLET ISOL 1(2)-RE-1595-M Approximately one turn.

   f. **START** SRW RMS PP using 1(2) HS 1595A

   g. **THROTTLE** 1(2)-RE-1595-M as necessary to obtain four to six GPM.

   h. **ENSURE** "SRW RADIATION RMS FLOW LO" alarm on 1C26 is clear.

   i. **VERIFY** OPERATION SELECTOR switch located at 1C22 is in OPERATE.

2. **IF** desired to startup Access Control Area Radiation Monitor,
   THEN PERFORM the following:

   a. **ENSURE OPEN** ACCESS CONTROL AREA VENTILATION RAD MONITOR INLET ISOLATION VALVE, 0-RE-5425-H.

   b. **ENSURE OPEN** ACCESS CONTROL AREA VENTILATION RAD MONITOR OUTLET ISOLATION VALVE, 0-RE-5425-K.

   c. **VERIFY SHUT** ACCESS CONTROL AREA VENTILATION RAD MONITOR PURGE FILTER ISOLATION VALVE, 0-RE-5425-I.

   d. **START** ACCESS CONTROL RMS PP using 0-HS-5427.

   e. **THROTTLE** 0-RE-5425-H as necessary to obtain 8-12 SCFM.

   f. **ENSURE** "ACCESS CONTR VENT RMS FLOW LO" alarm on 1C26 is clear.

   g. **VERIFY** OPERATION SELECTOR switch located at 1C22 is in OPERATE.

6.11.B Startup (Continued)

3. **IF** desired to startup Blowdown 1(2)-RI-4014 Radiation Monitor, **THEN PERFORM** the following:

   a. **ENSURE** CCW is aligned properly to the Rad Monitor skid.

   b. **ENSURE OPEN** S/G BD RMS CLR INL, 1(2)-RE-4014-H.

   c. **ENSURE SHUT** 1-FIS-4014 BYP, 1(2)-RE-4014-J.

   d. **ENSURE OPEN** 1-FIS-4014 INL, 1(2)-RE-4014-M.

   e. **ENSURE OPEN** 1-FIS-4014 OUT, 1(2)-RE-4014-N.

   f. **THROTTLE OPEN** S/G BD RMS PP DISCH, 1(2)-RE-4014-I approximately one turn.

   g. **START** RI-4014 RMS PP using 1(2) HS 4014A.

   h. **THROTTLE** 1(2)-RE-4014-I as necessary to obtain five to six GPM.

   i. **ENSURE** "11(21) SG BDTK RMS FLOW LO" alarm on 1C26 is clear.

   j. **VERIFY** OPERATION SELECTOR switch located at 1C22 is in OPERATE.

4. **IF** desired to startup the Blowdown Recovery System Radiation Monitor, 1(2)-RIC-4095, **THEN PERFORM** the following:

   a. **ENSURE SHUT** 1(2)RE4095 PURGE INLET ISOL VLV, 1(2)-RE-4095-C.

   b. **ENSURE SHUT** 1(2)RE4095 INLET GRAB SAMPLE PORT ISOL VLV, 1(2)-RE-4095-E.

   c. **ENSURE SHUT** 1(2)RE4095 OUTLET DRN ISOL VLV, 1(2)-RE-4095-G.

   d. **ENSURE SHUT** 1(2)RE4095 OUTLET GRAB SAMPLE PORT ISOL VLV, 1(2)-RE-4095-H.

   e. **ENSURE OPEN** 1(2)RE4095 INLET ISOL VLV, 1(2)-RE-4095-A.

   f. **ENSURE OPEN** 1(2)RE4095 OUTLET ISOL VLV, 1(2)-RE-4095-I.

   g. At 1(2)-RIC-4095 on 1C22G, **HIGHLIGHT** Start Pump **AND PRESS** SELECT.

   h. **CHECK** the CH 1 green OPER LED is lit.

6.11.B Startup (Continued)

5. **IF** desired to startup Control Room Radiation Monitor,
THEN PERFORM the following:

   a. **THROTTLE OPEN** CR RAD MON INL, 0-RE-5350-I approximately one turn.

   b. **THROTTLE OPEN** CR RAD MON INL, 0-RE-5350-H approximately one turn.

   c. **ENSURE OPEN** CR RAD MON OUT, 0-RE-5350-L.

   d. **ENSURE** SHUT CONTROL ROOM RADIATION MONITOR PURGE FILTER ISOLATION VALVE, 0-RE-5350-K.

   e. **START** CONTROL ROOM RMS PP using 0-HS-5349C.

   f. **THROTTLE** CR RAD MON INL, 0-RE-5350-I, and CR RAD MON INL, 0-RE-5350-H, as necessary to obtain approximately 10 SCFM.

   g. **ENSURE** "CONTR RM VENT RMS FLOW LO" alarm on 1C26 is clear.

   h. **VERIFY** OPERATION SELECTOR switch located at 1C22 is in OPERATE.

   i. **ENSURE** required actions of OI-22F section titled OPERATION WITH CONTROL ROOM RADIATION SIGNAL (CRRS) OOS are complete.

6. **IF** desired to startup Fuel Handling Radiation Monitor,
THEN PERFORM the following:

   a. **ENSURE OPEN** FUEL HANDLING AREA EXHAUST RAD MONITOR PURGE INLET ISOLATION VALVE, 0-RE-5420-H.

   b. **ENSURE OPEN** FUEL HANDLING AREA EXHAUST RAD MONITOR PURGE OUTLET ISOLATION VALVE, 0-RE-5420-K.

   c. **ENSURE SHUT** FUEL HANDLING AREA EXHAUST RAD MONITOR PURGE INLET FILTER ISOLATION VALVE, 0-RE-5420-I.

   d. **START** FUEL HANDLING RMS PP using 0-HS-5423.

   e. **THROTTLE** 0-RE-5420-H as necessary to obtain approximately 8-12 SCFM.

   f. **ENSURE** "FUEL HANDLING VENT RMS FLOW LO" alarm on 1C26 is clear.

   g. **VERIFY** OPERATION SELECTOR switch located at 1C22 is in OPERATE.

6.11.B Startup (Continued)

7. **IF** desired to startup ECCS Pump Room Radiation Monitor, **THEN PERFORM** the following:

   a. **ENSURE OPEN** ECCS PUMP ROOM VENTILATION RADIATION MONITOR INLET ISOLATION VALVE, 1(2)-RE-5406-H.

   b. **ENSURE OPEN** ECCS PUMP ROOM VENTILATION RADIATION MONITOR OUTLET ISOLATION VALVE, 1(2)-RE-5406-J.

   c. **ENSURE SHUT** ECCS PUMP ROOM VENTILATION RADIATION MONITOR PURGE INLET ISOLATION VALVE, 1(2)-RE-5406-I.

   d. **START** ECCS PUMP ROOM RMS PP using 1(2)-HS-5405.

   e. **THROTTLE** 1(2)-RE-5406-H as necessary to obtain approximately 8-12 SCFM.

   f. **ENSURE** "U-1(U-2) ECCS PP RM VENT RMS FLOW LO" alarm on 1C26 is clear.

   g. **VERIFY** OPERATION SELECTOR switch located at 1C22 is in OPERATE.

8. **IF** desired to startup Waste Processing Area Radiation Monitor, **THEN PERFORM** the following:

   a. **ENSURE OPEN** WASTE PROCESSING MONITOR PUMP SUCTION ISOLATION VALVE, 1(2)-RE-5410-H.

   b. **ENSURE OPEN** WASTE PROCESSING MONITOR PUMP DISCHARGE ISOLATION VALVE, 1(2)-RE-5410-J.

   c. **ENSURE SHUT** WASTE PROCESSING MONITOR MONITOR PURGE SUCTION FILTER ISOLATION VALVE, 1(2)-RE-5410-I.

   d. **START** WASTE PROCESSING MONITOR RMS PP using 1(2)-HS-5409A.

   e. **THROTTLE** WASTE PROCESSING MONITOR PUMP SUCTION ISOLATION VALVE, 1(2)-RE-5410-H as necessary to obtain approximately 8-12 SCFM.

   f. **ENSURE** "U-1(U-2) WASTE PROC RMS FLOW LO" alarm on 1C26 is clear.

   g. **VERIFY** OPERATION SELECTOR switch located at 1C22 is in OPERATE.

****** END ******

6.11 RMS PUMP OPERATION [CONTINUOUS USE] (Continued)

C. Shutdown

1. IF desired to secure SRW Radiation Monitor,
   THEN **PERFORM** the following:

   a. **STOP** SRW RMS PP using 1(2)-HS-1595A.

   b. IF desired,
      THEN **SHUT** SRW RMS INL, 1(2)-RE-1595-H.

   c. **PLACE** OPERATION SELECTOR switch located at 1C22 in the desired position.

   d. **REFER** to 6.12, RADIATION MONITOR INOPERABILITY [B0023].

2. IF desired to secure Access Control Area Radiation Monitor,
   THEN **PERFORM** the following:

   a. **STOP** ACCESS CONTROL RMS PP using 0-HS-5427.

   b. IF desired,
      THEN **SHUT** ACCESS CONTROL AREA VENTILATION RAD MONITOR INLET ISOLATION VALVE, 0-RE-5425-H.

   c. **PLACE** OPERATION SELECTOR switch located at 1C22 in the desired position.

   d. **REFER** to 6.12, RADIATION MONITOR INOPERABILITY [B0023].

3. IF desired to secure Blowdown 1(2)-RI-4014 Radiation Monitor,
   THEN **PERFORM** the following:

   a. **STOP** RI-4014 RMS PP using 1(2)-HS-4014A.

   b. IF desired,
      THEN **SHUT** S/G BD RMS CLR INL, 1(2)-RE-4014-H.

   c. **PLACE** OPERATION SELECTOR switch located at 1C22 in the desired position.

   d. **REFER** to 6.12, RADIATION MONITOR INOPERABILITY [B0023].

6.11.C Shutdown (Continued)

4. IF desired to secure the Blowdown Recovery System Radiation Monitor, 1(2)-RIC-4095,
THEN PERFORM the following:

   a. **ENSURE** 1(2)HS4095B / S1 - OPER BYPASS key switch, is in the ON position.

   b. **CHECK** the BYPASS STATUS light is lit.

   c. At 1(2)-RIC-4095 on 1C22G, **HIGHLIGHT** Stop Pump **AND PRESS** SELECT.

   d. **CHECK** the CH 1 green OPER LED extinguishes.

   e. IF desired,
   THEN DEPRESS the 1(2)-RE-4095 Bypass Pushbutton on the RMS STATUS PNL, 1C22H to bypass the alarm (amber light).

   f. IF desired,
   THEN SHUT 1(2)RE4095 INLET ISOL VLV, 1(2)-RE-4095-A.

   g. IF desired,
   THEN SHUT 1(2)RE4095 OUTLET ISOL VLV, 1(2)-RE-4095-I.

   h. **REFER** to 6.12, RADIATION MONITOR INOPERABILITY [B0023].

5. IF desired to secure Control Room Radiation Monitor,
THEN PERFORM the following:

   a. **ENSURE** required actions of OI-22F section titled OPERATION WITH CONTROL ROOM RADIATION SIGNAL (CRRS) OOS are complete.

   b. **STOP CONTROL** ROOM RMS PP using 0-HS-5349C.

   c. IF desired,
   THEN SHUT CR RAD MON INL, 0-RE-5350-I and 0-RE-5350-H.

   d. **PLACE** OPERATION SELECTOR switch located at 1C22 in the desired position.

   e. **REFER** to 6.12, RADIATION MONITOR INOPERABILITY [B0023].

6.11.C Shutdown (Continued)

6. **IF** desired to secure Fuel Handling Radiation Monitor,
   THEN PERFORM the following:

   a. **STOP** FUEL HANDLING RMS PP using 0-HS-5423.

   b. **IF** desired,
      THEN SHUT FUEL HANDLING AREA EXHAUST RAD MONITOR PURGE INLET ISOLATION VALVE, 0-RE-5420-H.

   c. **PLACE** OPERATION SELECTOR switch located at 1C22 in the desired position.

   d. **REFER** to 6.12, RADIATION MONITOR INOPERABILITY [B0023].

7. **IF** desired to secure ECCS Pump Room Radiation Monitor,
   THEN PERFORM the following:

   a. **STOP** ECCS PUMP ROOM RMS PP using 1(2)-HS-5405.

   b. **IF** desired,
      THEN SHUT ECCS PUMP ROOM VENTILATION RADIATION MONITOR INLET ISOLATION VALVE, 1(2)-RE-5406-H.

   c. **PLACE** OPERATION SELECTOR switch located at 1C22 in the desired position.

   d. **REFER** to 6.12, RADIATION MONITOR INOPERABILITY [B0023].

8. **IF** desired to secure Waste Processing Area Radiation Monitor,
   THEN PERFORM the following:

   a. **STOP** WASTE PROCESSING MONITOR RMS PP using 1(2)-HS-5409A.

   b. **IF** desired,
      THEN SHUT WASTE PROCESSING MONITOR PUMP SUCTION ISOLATION VALVE, 1(2)-RE-5410-H.

   c. **PLACE** OPERATION SELECTOR switch located at 1C22 in the desired position.

   d. **REFER** to 6.12, RADIATION MONITOR INOPERABILITY [B0023].

****** END ******

6.12 RADIATION MONITOR INOPERABILITY [CONTINUOUS USE] [B0023]

A. Initial Conditions

NONE

B. Procedure

NOTE
Area RMS when de-energized will alarm locally.

1. **WHEN** radiation monitoring equipment is declared out of service **OR** is to be taken out of service for maintenance or testing,
   THEN PERFORM the following:

NOTE
Containment entry is necessary for air samples when BOTH Containment RMS Pumps are OOS, due to the inability of portable equipment to obtain a representative sample.

   a. **CHECK** Table (1) for applicability.

   b. **CHECK** Technical Specifications for applicability.

   c. **CHECK** TRM for applicability.

   d. **CHECK** ODCM for applicability.

2. **NOTIFY** Chemistry if a process and effluent monitor is inoperable **OR NOTIFY** Radiation Protection Supervision if an area monitor is inoperable.

3. **RECORD** the following in the Control Room Operators Log:

   - What actions are required.
   - Name of the persons notified.
   - **IF** there is more than one alternate method of sampling,
     THEN SPECIFY which method Chemistry or Radiation Protection Supervision will be using, as appropriate.

6.12.B Procedure (Continued)

NOTE
Future actions should be tracked on the Shift Turnover sheet in accordance with CNG-OP-1.01-2002 for OOS RMS as applicable.

4. **CHECK** with Plant Chemistry and Radiation Protection Supervision once a shift to ensure the ODCM/TRM/TS requirements are being met for all inoperable Radiation Monitoring System Monitors.

****** END ******

6.13 SOURCE CHECK OF RI-4014 AND RIC-4095 FOR PE 0-77-3-O-M [CONTINUOUS USE]

A. Initial Conditions

NOTE
To source check the RMS, process flow is **NOT** required.

1. RMS(s) being tested is(are) energized.

B. Procedure

1. **IF** a source check was recorded in the CR log within the previous two weeks, **THEN RECORD** the value on the PE sheet.

   a. **IF** the recorded value for 1(2)-RI-4014 is less than 200 cpm, **THEN CONTACT** the system engineer for evaluation.

   b. **IF** the required Radiation Monitors have been source checked within the previous two weeks, **THEN** the PE is complete, **OMIT** the remaining steps of this procedure.

NOTE
The Blowdown System Radiation Monitor may alarm when performing the source check.

2. **IF** testing 1(2)-RI-4014, **THEN PERFORM** the following:

   a. **ENSURE** blowdown for the unit the RMS is being tested is in short term shutdown **PER** OI-8A.

   b. **SELECT** 1(2)-RI-4014 for trending on its associated recorder.

   c. **PLACE** the Operation Selector Switch in the CHECK SOURCE position, **AND HOLD** for at least 30 seconds.

   d. **RECORD** the digital indication from the recorder on the PE sheet.

      - **IF** the Rad Monitor alarms, **THEN PLACE** the Operator Selector Switch to RESET, **THEN RETURN** to OPERATE.

6.13.B.2 Procedure (Continued)

NOTE
The natural radioactive decay of the check source along with the aging of the check source spring and solenoid will result in a lower check source reading and an larger variation in the readings over time.

e. **IF** the recorded value is less than 200 cpm,
THEN CONTACT the system engineer for evaluation.

f. **RESTORE** recorders to desired operating condition.

g. **IF** Blowdown was placed in Short Term Shutdown and it is desired to restore Blowdown,
THEN RESTORE Blowdown **PER** OI-8A.

3. **IF** testing 1(2)-RIC-4095,
THEN PERFORM Section 6.18.C.

****** END ******

6.14 CONTAINMENT AREA RADIATION MONITORS OPERATION [CONTINUOUS USE]

A. Initial Conditions

NOTE
Possible plant conditions to remove monitors from service are Radiography or High Radiation source moves inside containment.

1. Desired to temporarily remove Containment Area Radiation Monitor(s) from service.
2. T.S. 3.3.7 and 3.9.3 required actions are met.
3. Radiation Protection has been informed **PER** 6.12, RADIATION MONITOR INOPERABILITY [B0023].

B. Shutdown

1. **IF** removing U-1 Containment Area Radiation Monitor(s) from service, **THEN PLACE** the desired Monitor(s) in LEVEL CAL:(N/A if other unit)
   - 1-RE-5316A
   - 1-RE-5316B
   - 1-RE-5316C
   - 1-RE-5316D
2. **IF** removing U-2 Containment Area Radiation Monitor(s) from service, **THEN PLACE** the desired Monitor(s) in LEVEL CAL:(N/A if other unit)
   - 2-RE-5316A
   - 2-RE-5316B
   - 2-RE-5316C
   - 2-RE-5316D

****** END ******

6.14 CONTAINMENT AREA RADIATION MONITORS OPERATION [CONTINUOUS USE] (Continued)

C. Startup

NOTE
Step 1 is a continuous step. Channel(s) may trip spuriously when placing in service.

1. **WHEN** restoring a CRS channel to operation,
   THEN RESET any CRS sensor module or alarm prior to restoring another channel if needed.

2. **WHEN** desired to restore U-1 Containment Area Radiation Monitor(s) to service,
   THEN PLACE the desired Monitor(s) in OPERATE **OR** as directed by the CRS:(N/A if other unit)

   - 1-RE-5316A
   - 1-RE-5316B
   - 1-RE-5316C
   - 1-RE-5316D

3. **WHEN** desired to restore U-2 Containment Area Radiation Monitor(s) to service,
   THEN PLACE the desired Monitor(s) in OPERATE **OR** as directed by the CRS:(N/A if other unit)

   - 2-RE-5316A
   - 2-RE-5316B
   - 2-RE-5316C
   - 2-RE-5316D

****** END ******

6.15 REMOTE ATMOSPHERIC SAMPLES OF CONTAINMENT FOR AIR QUALITY [CONTINUOUS USE]

A. Initial Conditions

1. Containment atmosphere sample for Confined Space Permit is required.
2. Containment RMS pump is operating.

B. Procedure

1. **ENSURE** NO adverse Containment RMS trends are present.
2. **CHECK OPEN** the following valves:
   - 1(2)-CRM-5291-CV
   - 1(2)-CRM-5292-CV

NOTE

- The air monitors to be used are located in the South Service Building in the Cal Lab. They are noted with a plaque that states "Air monitors in this charger are staged for Containment entry." These monitors should be checked out using the Test Equipment check out system.
- The Drager pump is used to obtain CO samples. This pump and associated tubes are located in the 5' Fire Brigade equipment locker.
- The air monitor pump and sample rig is also located in the 5' Fire Brigade equipment locker. There are separate sample rigs for Unit 1 and Unit 2.

3. **OBTAIN** the containment entry atmospheric monitor from the Cal Lab.
4. **OBTAIN** the Drager pump, sample tubes, air monitor pump, and sample rig from the 5' Fire Brigade equipment locker.
5. **NOTIFY** Control Room prior to sampling.
6. **CONNECT** the Sample Rig inlet to 1(2)-RE-5281 OUTLET CALIB PORT ISOL, 1(2)-CRM-18.
7. **CONNECT** the air monitor with pump to the end of the sample rig tubing.

WARNING

Sampling may release small amounts of hydrogen or radioactivity from the containment. Ensure Sample Rig discharge is directed away from personnel and possible heat sources.

8. **OPEN** 1(2)-RE-5281 OUTLET CALIB PORT ISOL, 1(2)-CRM-18.

6.15.B Procedure (Continued)

9. **MAINTAIN** flow for a minimum of 3 minutes and until necessary sampling for O_2 and LEL readings are complete.

10. **SHUT** 1(2)-RE-5281 OUTLET CALIB PORT ISOL, 1(2)-CRM-18.

11. **DISCONNECT** air monitor from the Sample Rig tubing.

12. **CONNECT** Drager Pump to the Sample Rig tubing.

WARNING
Sampling may release small amounts of hydrogen or radioactivity from the containment. Ensure Sample Rig discharge is directed away from personnel and possible heat sources.

13. **OPEN** 1(2)-RE-5281 OUTLET CALIB PORT ISOL, 1(2)-CRM-18.

14. **OBTAIN** CO readings using the Drager pump.

15. **SHUT** 1(2)-RE-5281 OUTLET CALIB PORT ISOL, 1(2)-CRM-18.

16. **DISCONNECT** the sample rig from the inlet to 1(2)-RE-5281 OUTLET CALIB PORT ISOL, 1(2)-CRM-18.

17. **NOTIFY** Control Room that sampling is complete.

18. **NOTIFY** Radiation Protection that sampling is complete.

19. **RETURN** the Drager pump, air monitor pump, and the sample rig to the 5' Fire Brigade equipment locker.

20. **DISCARD** the sample tube in the appropriate trash receptacle.

21. **RETURN** the air monitor to the Cal Shop, and log back into the system using the Test Equipment check out system.

22. **RECORD** the sampling results, instrument number, cal due date, and time of sample on the FASW turnover sheet.

23. **NOTIFY** the Control Room of the sampling results, instrument number, cal due date, and time of sample so the information can be entered into Control Room Operator's log.

****** END ******

6.16 PLACING A RADIATION MONITOR IN LEVEL CAL

A. Initial Conditions

1. CRS has approved placing selected Radiation Monitor in LEVEL CAL.

B. Procedure

1. **PERFORM** the following **PRIOR** to placing any radiation monitoring equipment in LEVEL CAL:

   a. **CHECK** Table (1) for applicability.

   b. **CHECK** Technical Specifications for applicability.

   c. **CHECK** TRM for applicability.

   d. **CHECK** ODCM for applicability.

2. **PERFORM** the following to place the selected Radiation Monitor in LEVEL CAL:

   a. **PLACE** the Operator Slector Switch to RESET position **AND ENSURE** alarm clears.

   b. **PLACE** the Operation Selector Switch in the LEVEL CAL position

   c. **IF DESIRED**,
   THEN BYPASS the selected Radiation Monitor Alarm.

3. **ENSURE** local and remote meters indicate as follows:

   - Process Radiation Monitors indicate approximately 100 CPM (7.1×10^{1} to 1.4×10^{2}).

   - Area Radiation Monitors indicate approximately 1mR/hr (7.1×10^{-4} to 1.4×10^{-3}).

4. **NOTIFY** Chemistry if a process and effluent monitor is inoperable **OR NOTIFY** Radiation Protection Supervision if an area monitor is inoperable.

5. **LOG** the RMS placed in LEVEL CAL in the U-1 Control Room Operators Miscellaneous log book.

****** END ******

6.17 RETURNING A RADIATION MONITOR TO SERVICE FROM LEVEL CAL

A. Initial Conditions

1. Conditions warrant returning the RMS to service.

B. Procedure

1. **WHEN** it is desired to remove the selected Radiation Monitor from level cal, **THEN PERFORM** the following:

   a. **PLACE** the Operation Selector Switch in the RESET position.

   b. **PLACE** the Operation Selector Switch in the OPERATE position.

   c. **VERIFY UNBYPASSED** the selected Radiation Monitor Alarm.

2. **PERFORM** a Channel check of the selected Radiation Monitor per Section 6.2.B, Channel Checks.

3. **NOTIFY** Chemistry if a process and effluent monitor is returned to service **OR NOTIFY** Radiation Protection Supervision if an area monitor is returned to service.

4. **UPDATE** the Radiation Monitor returned to service in the U-1 Control Room Operators Miscellaneous log book.

6.18 BLOWDOWN RECOVERY RADIATION MONITOR 1(2)-RIC-4095 [CONTINUOUS USE]

A. Initial Conditions

NONE

B. Display History

1. **HIGHLIGHT** Menus **AND PRESS** SELECT.
2. **HIGHLIGHT** Display/Clear History **AND PRESS** SELECT.
3. **HIGHLIGHT** Display History **AND PRESS** SELECT.
4. **HIGHLIGHT** the desired history:
   - 1 Minute
   - 10 Minute
   - Hourly
   - Daily

   AND PRESS SELECT.
5. **WHEN** complete,
   THEN PRESS CURRENT ACTIVITY.
6. **PRESS** SELECT.

****** END ******

6.18 BLOWDOWN RECOVERY RADIATION MONITOR 1(2)-RIC-4095 [CONTINUOUS USE] (Continued)

C. Source Check

1. **IF** the sample pump is secured,
   THEN PERFORM the following:

   a. **VERIFY** blowdown has been in service since maintenance was performed that drained the Blowdown Recovery System RMS Sample Pump.

   b. **VERIFY OPEN** the following:

   - 1(2)RE4095 INLET ISOL VLV, 1(2)-RE-4095-A.
   - 1(2)RE4095 OUTLET ISOL VLV, 1(2)-RE-4095-I.

CAUTION
This step starts the Blowdown Recovery System RMS Sample Pump in recirc on the residual water in the blowdown piping. The sample pump should **NOT** be run for greater than 30 minutes without blowdown flow.

   c. At 1(2)-RIC-4095 on 1C22G, **HIGHLIGHT** Start Pump **AND PRESS** SELECT.

NOTE
The sample pump low flow trip must clear to allow the OPER LED to light.

2. **VERIFY** the CH 1 green OPER LED is lit.

3. **HIGHLIGHT** Start Check Source **AND PRESS** SELECT twice.

NOTE
When the Check Source is activated, the Current Activity freezes at the last detected dose rate and the current countrate of the checksource is displayed. No alarms or actuations will occur.

4. **VERIFY** Check Source In Progress is displayed.

NOTE
Checksource takes approximately 1 minute.

5. **WHEN** the Check Source is complete,
   THEN PRESS CURRENT ACTIVITY.

6. **PRESS** SELECT.

6.18.C Source Check (Continued)

7. **CHECK** the CH 1 green OPER LED is lit.

   - **IF** the Source Check fails,
     THEN PERFORM the following:

     a. **CONTACT** Chemistry.

     b. **DECLARE** 1(2)-RE-4095 out of service.

     c. **REFER** to ODCM Control 3.3.3.10 for alternative monitoring requirements.

8. **IF** the sample pump was secured,
   THEN PERFORM the following:

   a. At 1(2)-RIC-4095 on 1C22G, **HIGHLIGHT** Stop Pump **AND PRESS** SELECT.

   b. **VERIFY** the CH 1 green OPER LED is **NOT** lit.

   c. **IF** desired,
      THEN DEPRESS the 1(2)-RE-4095 Bypass Pushbutton on the RMS STATUS PNL, 1C22H to bypass the alarm (amber light).

****** END ******

D. Alarm Bypass Operation

1. **IF** desired to operate the Blowdown System with the RMS Out of Service,
   THEN PERFORM the following:

   a. **PLACE** 1(2)HS4095B / S2 - HIGH BYPASS key switch, in the ON position.

   b. **VERIFY** 1(2)HS4095B / S1 - OPER BYPASS key switch, in the ON position.

   c. **CHECK** the BYPASS STATUS light is lit.

2. **WHEN** desired to restore the RMS to service,
   THEN PERFORM the following:

   a. **PLACE** 1(2)HS4095B / S2 - HIGH BYPASS key switch, in the OFF position.

   b. **VERIFY** 1(2)HS4095B / S1 - OPER BYPASS key switch, in the ON position.

   c. **CHECK** the BYPASS STATUS light is lit.

****** END ******

6.18 BLOWDOWN RECOVERY RADIATION MONITOR 1(2)-RIC-4095 [CONTINUOUS USE] (Continued)

E. Shutdown

1. **OBTAIN** the U-1(2) Blowdown Recovery System RMS skid cabinet door key.

2. On the U-1(2) Blowdown Recovery System RMS skid, **PLACE** the Pump Control handswitch in OFF.

3. **INSERT** the key **AND OPEN** the U-1(2) Blowdown Recovery System RMS skid cabinet door.

4. **VERIFY** the AC Power Module Switch inside the cabinet on the U-1(2) Blowdown Recovery System RMS skid is OFF.

5. **CLOSE** the U-1(2) Blowdown Recovery System RMS skid cabinet door **AND REMOVE** the key.

6. **VERIFY** the AC Power Switch, CB1, on the back of 1(2)-RIC-4095 at 1C22G is OFF.

7. **PLACE** the U-1(2) Blowdown Recovery System RMS skid Power Disconnect Switch in OFF.

8. **IF** desired,
   THEN VERIFY SHUT 1(2)RE4095 INLET ISOL VLV, 1(2)-RE-4095-A.

9. **IF** desired,
   THEN VERIFY SHUT 1(2)RE4095 OUTLET ISOL VLV, 1(2)-RE-4095-I.

****** END ******

6.19 LIQUID WASTE DISCHARGE RADIATION MONITOR 0-RIC-2201 [CONTINUOUS USE]

A. Initial Conditions

1. None

B. Start Up

1. **OBTAIN** the Liquid Waste Discharge RMS skid cabinet door key.

2. **VERIFY** the AC Power Switch, CB1, on the back of 0-RIC-2201 at 1C22D is in OFF.

3. **INSERT** the key **AND OPEN** the Liquid Waste Discharge RMS skid cabinet door.

4. **VERIFY** the following on the Liquid Waste Discharge RMS skid:

   - AC Power Module Switch inside the cabinet is in OFF
   - Power Disconnect Switch is in OFF
   - Pump Control handswitch is in OFF
   - Purge Control handswitch is in OFF

5. **PLACE** the Liquid Waste Discharge RMS skid Power Disconnect Switch in ON.

6.19.B Start Up (Continued)

6. **PERFORM** the following on the Liquid Waste Discharge RMS skid:

   a. **PLACE** the AC Power Module Switch inside the cabinet on the Liquid Waste Discharge RMS skid in ON.

   b. **CLOSE** the Liquid Waste Discharge RMS skid cabinet door **AND REMOVE** the key.

   c. **WHEN** the display screen has restored,
   THEN PRESS CURRENT ACTIVITY.

   d. **PRESS** SELECT.

   e. **HIGHLIGHT** Display Startup Info
   AND PRESS SELECT twice.

   f. **VERIFY** the board status for Channel 1 indicates Alive status.

   g. **PRESS** CURRENT ACTIVITY.

   h. **PRESS** SELECT.

   i. **VERIFY** the clock is incrementing.

   j. **HIGHLIGHT** Menus
   AND PRESS SELECT.

      (1) **IF** Activate Monitor appears on the list,
      THEN HIGHLIGHT this item
      AND PRESS SELECT.

   k. **PRESS** CURRENT ACTIVITY.

   l. **PRESS** SELECT.

   m. **HIGHLIGHT** Display Status
   AND PRESS SELECT.

NOTE
The following are expected:

- Database Change
- Loop A Shutdown
- Loop B Shutdown

   n. **VERIFY** no indications of any abnormal conditions.

   o. **PRESS** CURRENT ACTIVITY.

6.19.B.6 Start Up (Continued)

p. **PRESS** SELECT.

q. On the Liquid Waste Discharge RMS skid, **PLACE** the Pump Control handswitch in AUTO **AND VERIFY** the sample pump does **NOT** start.

7. **PERFORM** the following on 0-RIC-2201 at 1C22D:

a. **PLACE** the AC Power Switch, CB1, on the back of 0-RIC-2201 at 1C22D in ON.

b. **WHEN** the display screen has restored, **THEN PRESS** CURRENT ACTIVITY.

c. **PRESS** SELECT.

d. **VERIFY** the clock is incrementing.

e. **HIGHLIGHT** Display Status **AND PRESS** SELECT.

NOTE
The following are expected:

- Database Change
- Loop A Shutdown
- Loop B Shutdown

f. **VERIFY** no indications of any abnormal conditions.

g. **PRESS** CURRENT ACTIVITY.

h. **PRESS** SELECT.

i. **VERIFY** 0HS2201B / S1 - OPER BYPASS key switch, in the ON position.

(1) **CHECK** the BYPASS STATUS light is lit.

6.19.B.7 Start Up (Continued)

NOTE

- RMS VLV INTERLOCK ACTUATED Light will remain lit due to no sample flow.
- RMS VLV INTERLOCK RESET is pressed to clear the High Alarm that was actuated when 0-RIC-2201 was energized.

j. **DEPRESS** RMS VLV INTERLOCK RESET, 0-HS-2201B/S3. ____

****** END ******

C. Display History

1. **HIGHLIGHT** Menus
   AND PRESS SELECT.

2. **HIGHLIGHT** Display/Clear History
   AND PRESS SELECT.

3. **HIGHLIGHT** Display History
   AND PRESS SELECT.

4. **HIGHLIGHT** the desired history:

   - 1 Minute
   - 10 Minute
   - Hourly
   - Daily

   AND PRESS SELECT.

5. **WHEN** complete,
   THEN PRESS CURRENT ACTIVITY.

6. **PRESS** SELECT.

****** END ******

D. Clear History\Memory

1. **HIGHLIGHT** Menus
   AND PRESS SELECT.

2. **HIGHLIGHT** Display/Clear History
   AND PRESS SELECT.

6.19.D Clear History\Memory (Continued)

3. **HIGHLIGHT** Clear All Memory
   AND PRESS SELECT twice.

4. **WHEN** complete,
   THEN PRESS CURRENT ACTIVITY.

5. **PRESS** SELECT.

****** END ******

E. Source Check

1. At 0-RIC-2201, **ENSURE** the NORMAL/SUPERVISOR keyswitch in SUPV.

2. **PRESS** SELECT.

3. **HIGHLIGHT** Menus
   AND PRESS SELECT.

4. **HIGHLIGHT** Display/Modify Database
   AND PRESS SELECT.

5. **HIGHLIGHT** Sample FLow Items
   AND PRESS SELECT.

6. **HIGHLIGHT** Substitute Value Request, Sample Flow,
   AND PRESS SELECT.

7. **SET** Substitute Value Request, Sample Flow, to a value of 001
   AND PRESS SELECT.

8. **VERIFY** the CH 1 green OPER LED is lit.

9. **PRESS** MENU 3 times until CURRENT ACTIVITY CHANNEL 1 is displayed.

10. **HIGHLIGHT** Start Check Source
    AND PRESS SELECT twice.

NOTE

When the Check Source is activated, the Current Activity freezes at the last detected dose rate and the current countrate of the checksource is displayed. No alarms or actuations will occur.

11. **VERIFY** Check Source In Progress is displayed.

6.19.E Source Check (Continued)

NOTE
Checksource takes approximately 1 minute.

12. **WHEN** the Check Source is complete,
THEN PRESS CURRENT ACTIVITY.

13. **PRESS** SELECT.

14. **CHECK** the CH 1 green OPER LED is lit.

NOTE
A failed Source Check is indicated by a the OPER LED **NOT** lit.

- **IF** the Source Check fails,
THEN REFER to OI-35, Section titled,
RADIATION MONITOR INOPERABILITY for
alternative monitoring requirements.

15. **HIGHLIGHT** Menus
AND PRESS SELECT.

16. **HIGHLIGHT** Sample FLow Items
AND PRESS SELECT.

17. **HIGHLIGHT** Substitute Value Request, Sample Flow,
AND PRESS SELECT.

18. **SET** Substitute Value Request, Sample Flow, to a value of 000
AND PRESS SELECT.

19. At 0-RIC-2201, **ENSURE** the NORMAL/SUPERVISOR
keyswitch in NORM.

20. **PRESS** CURRENT ACTIVITY.

21. **PRESS** SELECT.

22. **IF** Rad Waste Monitor, 0-RE-2201 fails testing,
THEN PERFORM the following:
(N/A if test of 0-RE-2201 is SAT)

    a. **CONTACT** Chemistry.

    b. **CONSIDER** the actions of ODCM CONTROLS 3.3.3.10.

****** END ******

6.19 LIQUID WASTE DISCHARGE RADIATION MONITOR 0-RIC-2201 [CONTINUOUS USE] (Continued)

F. High Alarm Check

1. **ENSURE SHUT** the following valves:

   - LIQ WASTE DISCH TO U-1 CW, 0-MWS-531

   OR

   - LIQ WASTE DISCH TO U-2 CW, 0-MWS-532

2. **ENSURE** 0HS2201B / S1 - OPER BYPASS key switch, in the ON position.

3. **OPEN** the LIQ WASTE DISCH valves:

   - 0-MWS-2201-CV (0-HS-2201)
   - 0-MWS-2202-CV (0-HS-2202)

4. At 0-RIC-2201, **PLACE** the NORMAL/SUPERVISOR keyswitch to SUPV.

5. At 0-RIC-2201 **VERIFY** 0HS2201B / S2 - HIGH BYPASS key switch, in the OFF position.

6. **HIGHLIGHT** Menus
   AND PRESS SELECT.

7. **HIGHLIGHT** Display/Modify Database
   AND PRESS SELECT.

8. **HIGHLIGHT** Channel Items
   AND PRESS SELECT.

9. **HIGHLIGHT** Setpoint, High Alarm,
   AND PRESS SELECT.

10. **NOTE** Setpoint, High Alarm, setting.

    - Setting _____

11. **SET** Setpoint, High Alarm, to a value of 1.50 E+01
    AND PRESS SELECT.

12. **CHECK** for the following:

    - 0-RE-2201 RMS STATUS PNL, 1C22H, amber light (alarm)
    - 1C17 "RAD MON PANEL 1C22" annunciator alarms.

6.19.F High Alarm Check (Continued)

13. **ENSURE** the LIQUID WASTE DISCHARGE CONTROL VALVES, shut on a high alarm condition:

    - 0-MWS-2201-CV
    - 0-MWS-2202-CV

14. **PRESS** MENU pushbutton.

15. **HIGHLIGHT** Channel Items **AND PRESS** SELECT.

16. **HIGHLIGHT** Setpoint, High Alarm, **AND PRESS** SELECT.

17. **SET** Setpoint, High Alarm, to setting noted in Step 10 **AND PRESS** SELECT.

NOTE

- RMS VLV INTERLOCK ACTUATED Light will remain lit due to no sample flow.
- RMS VLV INTERLOCK RESET is pressed to clear the High Alarm.

18. **DEPRESS** RMS VLV INTERLOCK RESET, 0-HS-2201B/S3. ____

19. **VERIFY** the following:

    a. High alarm condition clear.

    b. Liquid Waste Discharge Control Valves re-open:

    - 0-MWS-2201-CV
    - 0-MWS-2202-CV

20. At 0-RIC-2201, **PLACE** the NORMAL/SUPERVISOR keyswitch to NORM.

21. **PRESS** the Current Activity button **AND PRESS** SELECT.

22. **SHUT** the LIQ WASTE DISCH valves:

    - 0-MWS-2201-CV (0-HS-2201)
    - 0-MWS-2202-CV (0-HS-2202)

6.19.F High Alarm Check (Continued)

23. **IF** Rad Waste Monitor, 0-RE-2201 fails testing,
THEN PERFORM the following:
(N/A if test of 0-RE-2201 is SAT)

    a. **CONTACT** Chemistry.

    b. **CONSIDER** the actions of ODCM CONTROLS 3.3.3.10.

****** END ******

G. Alarm Bypass Operation

1. **IF** desired to perform a discharge with the RMS Out of Service,
THEN PERFORM the following:

    a. **PLACE** 0HS2210B / S2 - HIGH BYPASS key switch, in the ON position.

    b. **VERIFY** 0HS2201B / S1 - OPER BYPASS key switch, in the ON position.

    c. **CHECK** the BYPASS STATUS light is lit.

2. **WHEN** desired to restore the RMS to service,
THEN PERFORM the following:

    a. **PLACE** 0HS2210B / S2 - HIGH BYPASS key switch, in the OFF position.

    b. **VERIFY** 0HS2210B / S1 - OPER BYPASS key switch, in the ON position.

    c. **CHECK** the BYPASS STATUS light is lit.

****** END ******

H. Shutdown

1. **OBTAIN** the Liquid Waste Discharge RMS skid cabinet door key.

2. On the Liquid Waste Discharge RMS skid, **PLACE** the Pump Control handswitch in OFF.

3. **INSERT** the key **AND OPEN** the Liquid Waste Discharge RMS skid cabinet door.

4. **VERIFY** the AC Power Module Switch inside the cabinet on the Liquid Waste Discharge RMS skid is OFF.

5. **CLOSE** the Liquid Waste Discharge skid cabinet door **AND REMOVE** the key.

6. **VERIFY** the AC Power Switch, CB1, on the back of 0-RIC-2201 at 1C22D is OFF.

6.19.H Shutdown (Continued)

7. **PLACE** the Liquid Waste Discharge RMS skid Power Disconnect Switch in OFF.

8. **IF** desired,
   THEN VERIFY SHUT 0RE2201 INLET ISOL VLV, 0-RE-2201-A.

9. **IF** desired,
   THEN VERIFY SHUT 0RE2201 OUTLET ISOL VLV, 0-RE-2201-I.

****** END ******

7.0 POST-PERFORMANCE ACTIVITIES

A. Upon completion of the attachment(s), forward the original(s) to the Operations Clerk for retention **PER** CNG-PR-3.01-1000, Records Management.

8.0 BASES

[B0023] The Radiation Monitor inoperability section was added to this procedure to address Corrective Action Number 2 of LER 89-001, Unit 2.

[B0060] Clarification added to radiation monitor source check to ensure positive meter deflection. Source: Design I&C.

[B0113] Clarification added to refer to ODCM 3.3.3.10 if the B/d flow indication fails during a Rad discharge per LER 91-008.

[B0591] Memos from J. E. Kunzmann dated 9/9/1997 and 9/19/1997, if local area radiation levels are 25-35 mr/hr or greater, then the source used to source check the RMS will not strong enough the cause a positive meter deflection.

[B0630] Steps revised to include required checks for ensuring the Containment Radiation Signal (CRS) is operable for Tech Spec 3.3.7.

[B0639] INPO recommendation per assist in July, 2000 to track out of service time of radiation monitors for primary to secondary leak detection.

9.0 RECORDS

A. Records generated by this procedure shall be captured and controlled. Prior to transferring records to Plant History for retention, legibility and completeness of the record shall be verified by the transmitting organization.

10.0 ATTACHMENTS

A. TABLE (1), TABLE (1).

B. ATTACHMENT (1A), RADIATION MONITORING SYSTEM.

C. ATTACHMENT (1B), RADIATION MONITORING SYSTEM.

D. ATTACHMENT (1C), RADIATION MONITORING SYSTEM.

E. ATTACHMENT (1D), RADIATION MONITORING SYSTEM.

F. ATTACHMENT (1E), RADIATION MONITORING SYSTEM - U-1 CONTAINMENT VALVE ALIGNMENT.

G. ATTACHMENT (1F), RADIATION MONITORING SYSTEM - U-2 CONTAINMENT VALVE ALIGNMENT.

TABLE (1)

MONITOR	APPLICABILITY	TS/TRM/ODCM	ACTION
RI-1752 CONDENSER OFF-GAS		Primary to Secondary leak detection **[B0639]**	**NOTIFY** Chemistry to review CP-236 for possible actions.
RI-2191 WASTE GAS DISCH MON	At all times	ODCM 3.3.3.9	IF RI-2191 is out of service, **Then ENSURE** ODCM Controls Requirement 3.3.3.9 Action 35 is met. Discharge CV's will shut when loss of power occurs.
FI-2192 WASTE GAS DISCH FLOW MON	At all times	ODCM 3.3.3.9	IF FI-2192 is out of service, **Then ENSURE** ODCM Controls Requirement 3.3.3.9 Action 36 is met.

MONITOR	APPLICABILITY	TS/TRM/ODCM	ACTION
RIC-2201 LIQUID WASTE DISCH MON	At all times	ODCM 3.3.3.10	IF RIC-2201 is out of service, **Then ENSURE** ODCM Controls Requirement 3.3.3.10 Action 28 is met. Discharge CV's will shut when loss of power occurs.
FI-2199 LIQUID WASTE DISCH FLOW MON	At all times	ODCM 3.3.3.10	IF FI-2199 is out of service, **Then ENSURE** ODCM Controls Requirement 3.3.3.10 Action 30 is met.

TABLE (1)

MONITOR	APPLICABILITY	TS/TRM/ODCM	ACTION
RI-4014 STM GEN BLOWDOWN TANK MON	At all times while process flow is present	ODCM 3.3.3.10 Primary to Secondary leak detection **[B0639]**	IF RI-4014 is out of service, **Then** RI-4095 may be used as a substitute. IF RI-4095 is used as a substitute for RI-4014, **Then COMPLETE** OI 8A, Section 6.28, REMOVING RI-4014 FROM SERVICE AND VERIFYING OPERABILITY OF RI-4095. IF RI-4014 **AND** RI-4095 are out of service, **Then ENSURE** ODCM Controls Requirement 3.3.3.10 Action 29 is met. Blowdown may shift to MWS when loss of power occurs. Reference 1C22-ALM.
RI-4095 STM GEN BLOWDOWN FLOW MON	At all times while process flow is present, **WHEN** used as a substitute for RI-4014		
FI-4089 STM GEN BLOWDOWN FLOW MON	At all times while process flow is present	ODCM 3.3.3.10	IF FI-4089 is out of service **Then ENSURE** ODCM Controls Requirement 3.3.3.10 Action 30 is met. During release, **ESTIMATE** flow rate every four hours. **[B0113]**

TABLE (1)

MONITOR	APPLICABILITY	TS/TRM/ODCM	ACTION
RE-5280 CONTAINMENT PARTICULATE RE-5281 CONTAINMENT GASEOUS	Modes 1-4	TS 3.4.14	IF RE-5280 AND RE-5281 are out of service, **Then ENTER** Action Statement 3.4.14 Action B AND **ENSURE** the required actions of T.S. 3.4.14 are met
RI-5316 A-D CONTAINMENT AREA MON	During CORE ALTERATIONS, with containment purge valves OPEN AND During movement of irradiated fuel assemblies within containment with containment purge valves OPEN	TS 3.3.7, 3.9.3	**ENSURE** T.S. 3.3.7 and 3.9.3 required actions are met Loss of power to 2 monitors will secure Cntmt Purge.
RI-5317 A-B CONTAINMENT AREA HIGH RANGE MON	Modes 1-3	TS 3.3.10	**ENSURE** T.S. 3.3.10 required actions are met

TABLE (1)

MONITOR	APPLICABILITY	TS/TRM/ODCM	ACTION
RI-5350 CONTROL ROOM VENTILATION MON	With either unit in Modes 1-4 **OR** During movement of irradiated fuel assemblies	TS 3.3.8	**ENSURE** TS 3.3.8 Required Actions are met Loss of power will shift CR ventilation to Recirc Mode. Refer to OI-22F, Section titled, **Operation With Control Room Rad Signal OOS (CRRS)**
RIC-5421 11 (21) MAIN STEAM EFFL RAD MON RIC-5422 12 (22) MAIN STEAM EFFL RAD MON	Modes 1-4	TRM 15.3.1 Contingency Measure B.1	IF one Main Steam Effluent Monitor is OOS, **THEN INFORM** the Shift Chem Tech to use the pre-planned alternate method of monitoriing the appropriate parameter per ERPIP-821, Section titled: MAIN STEAM SYSTEM MONITORING.
RIC-5421A 11 (21) N-16 RAD MON	greater than 50 % power	Primary to Secondary leak detection **[B0639]**	IF a monitor is out of service, Then **CONTACT** Chemistry to review CP-236 for alternate sampling requirements.
RIC-5422A 12 (22) N-16 RAD MON	greater than 50 % power		

TABLE (1)

MONITOR	APPLICABILITY	TS/TRM/ODCM	ACTION
RI-5415 MAIN VENT GASEOUS **OR** RE-5416 (LOW RANGE RIC-5415 WRNGM)	At all times when used to meet the minimum channels operable requirement of ODCM 3.3.3.9	ODCM 3.3.3.9 Action 37	**IF** RI-5415 **OR** RE-5416 is out of service, **THEN PERFORM** a channel check on the in-service (equivalent) monitor to verify operability, **OR INFORM** the Shift Chem Tech to obtain grab samples per CP-615, Section titled: PLANT MAIN VENT RELEASE. **IF** RI-5415 **AND** RE-5416 are both out of service, **THEN ENSURE** ODCM Controls 3.3.3.9 Action 37 is met.
RE-5320A **OR** RE-5320B MAIN VENT PARTICULATE/ TRITIUM/ IODINE SAMPLER	At all times	ODCM 3.3.3.9 ODCM 3.11.2.1	**IF** either RE-5320A **OR** 5320B is out of service, **Then CONTACT** Plant Chemistry to verify the other channel is OPERABLE.
RIC-5415 WIDE RANGE NOBLE GAS MON	Modes 1-4	TRM 15.3.1 Contingency Measure B.1	**IF** RIC-5415 is OOS, **THEN INFORM** the Shift Chem Tech to use the pre-planned alternate method of monitoring the appropriate parameter per ERPIP-821, Section titled: MAIN VENT MONITORING.

TABLE (1)

MONITOR	APPLICABILITY	ODCM	ACTION
WIDE RANGE NOBLE GAS CHARCOAL **AND** PARTICULATE SAMPLER	At all times **WHEN** used as a substitute for RE-5320A **OR** RE-5320B	ODCM 3.3.3.9	**IF** no flow is indicated at the WRNG MON **OR** when notified by Chemistry that the Wide Range Noble Gas Monitor Charcoal and Particulate Sampler is out of service, **AND** WRNG Charcoal and Particulate Sampler is being used a substitiute for RE-5320A **OR** RE-5320B, **Then ENSURE** requirements for OCDM 3.3.3.9 ACTION 38 are met. The Main Vent Particulate and Iodine Sampler can be used as an equivalent monitor **IF** the meter reading of RI-5415 on 1C22 is **NOT** off scale. **WHEN** RI-5415 meter reading on 1C22 is off scale, **Then IMPLEMENT** the pre-planned alternate monitoring methods **PER** ERPIP 821
RI-3819 COMPONENT COOLING RMS	At all times	Not applicable	Contact Chemistry to sample Component Cooling System **PER** CP-224
RI-1595 SERVICE WATER RMS	At all times	Not applicable	Contact Chemistry to sample Service Water System **PER** CP-224

ATTACHMENT (1A)
RADIATION MONITORING SYSTEM

VALVE NUMBER	STARTUP/ NORMAL OP. POS	DESCRIPTION	LOCATION	INIT/ DATE	COMMENTS
1-CRM-1	OPEN	CNTMT APD INLET	5 FT AUX BLDG BY E PENET RM		
1-CRM-2	OPEN	1-PI-5280 ISOL	5 FT AUX BLDG AT CONTAINMENT RMS SKID		
1-CRM-3	SHUT	CNTMT AIR PART DET PURGE INLET ISOL	5 FT AUX BLDG AT CONTAINMENT RMS SKID		
1-CRM-4	SHUT	1-RE-5280 INLET TEST PORT ISOL	5 FT AUX BLDG AT CONTAINMENT RMS SKID		
1-CRM-5	AS REQ	CNTMT ATMOS PP 11 SUCT	5 FT AUX BLDG AT CONTAINMENT RMS SKID		
1-CRM-6	AS REQ	CNTMT ATMOS PP 12 SUCT	5 FT AUX BLDG AT CONTAINMENT RMS SKID		
1-CRM-7	OPEN	PART DET INL	5 FT AUX BLDG AT CONTAINMENT RMS SKID		
1-CRM-8	OPEN	PART DET OUT	5 FT AUX BLDG AT CONTAINMENT RMS SKID		
1-CRM-9	OPEN	GAS DET INL	5 FT AUX BLDG AT CONTAINMENT RMS SKID		
1-CRM-10	OPEN	IODINE FILTER OUTLET	5 FT AUX BLDG AT CONTAINMENT RMS SKID		

ATTACHMENT (1A)
RADIATION MONITORING SYSTEM

VALVE NUMBER	STARTUP/ NORMAL OP. POS	DESCRIPTION	LOCATION	INIT/ DATE	COMMENTS
1-CRM-11	OPEN	GAS DET OUT	5 FT AUX BLDG AT CONTAINMENT RMS SKID		
1-CRM-12	AS REQ	CNTMT ATMOS PP 11 DISCH	5 FT AUX BLDG AT CONTAINMENT RMS SKID		
1-CRM-13	AS REQ	CNTMT ATMOS PP 12 DISCH	5 FT AUX BLDG AT CONTAINMENT RMS SKID		
1-CRM-14	OPEN	1-FM-5280 OUTLET	5 FT AUX BLDG AT CONTAINMENT RMS SKID		
1-CRM-15	OPEN	CNTMT APD OUT	5 FT AUX BLDG BY E PENET RM		
1-CRM-16	OPEN	1-PI-5280A ISOL	5 FT AUX BLDG AT CONTAINMENT RMS SKID		
1-CRM-17	SHUT	1-RE-5281 OUTLET DRN	5 FT AUX BLDG AT CONTAINMENT RMS SKID		
1-CRM-18	SHUT	1-RE-5281 OUTLET CALIB PORT ISOL	5 FT AUX BLDG AT CONTAINMENT RMS SKID		
1-CRM-19	SHUT	1-FM-5280 CALIB PORT ISOL	5 FT AUX BLDG AT CONTAINMENT RMS SKID		
1-CRM-20	SHUT	CNTMT APD INLET SAMPLE ISOL	5 FT AUX BLDG AT CONTAINMENT RMS SKID		

ATTACHMENT (1A)
RADIATION MONITORING SYSTEM

VALVE NUMBER	STARTUP/ NORMAL OP. POS	DESCRIPTION	LOCATION	INIT/ DATE	COMMENTS
1-CRM-21	SHUT	CNTMT APD INLET SAMPLE B/U ISOL	5 FT AUX BLDG AT CONTAINMENT RMS SKID		
1-CRM-22	SHUT	PART DET OUTLET DRN ISOL	5 FT AUX BLDG AT CONTAINMENT RMS SKID		
1-CRM-5279-SV	----	CNTMT ATMOS RMS INLET	5 FT AUX BLDG AT CONTAINMENT RMS SKID		
1-CRM-5280	----	CNTMT ATMOS PURGE INLET CHECK VALVE	5 FT AUX BLDG AT CONTAINMENT RMS SKID		
1-CRM-5282-SV	----	CNTMT ATMOS RMS PURGE	5 FT AUX BLDG AT CONTAINMENT RMS SKID		
1-CRM-5292-CV	OPEN(1)/SHUT(2)	CNTMT RMS ISOL	27 FT AUX BLDG E PENET RM		—
1-CRM-5292-SV	----	CNTMT RMS ISOL VLV SV	27 FT AUX BLDG E PENET RM		
1-RE-102	LOCKED SHUT CAPPED	CNTMT RMS TEST CONN ISOL	27 FT AUX BLDG E PENET RM		
1-RE-103	SHUT	CNTMT ATMOS TELLTALE	27 FT AUX BLDG E PENET RM		

(2) SHUT if Containment RMS Pump is secured.
(1) OPEN if Containment RMS in service.

ATTACHMENT (1A)
RADIATION MONITORING SYSTEM

VALVE NUMBER	STARTUP/ NORMAL OP. POS	DESCRIPTION	LOCATION	INIT/ DATE	COMMENTS
1-RE-104	OPEN	CNTMT ATMOS SMPL ISOL	27 FT AUX BLDG E PENET RM		
1-RE-105	OPEN	MN VENT SAMPLE SKID TRAIN A INLET 1-RE-5320A-CV AIR ISOL VLV	AB 69' FAN RM @ SAMPLE SKID A		
1-RE-106	OPEN	MN VENT SAMPLE SKID TRAIN B INLET 1-RE-5320B-CV AIR ISOL VLV	AB 69' FAN RM @ SAMPLE SKID B		
1-RE-1595-H	OPEN	SRW RMS INL	SE 5 FT W PENET RM		
1-RE-1595-I	OPEN	SRW RMS PP DISCH	SE 5 FT W PENET RM		
1-RE-1595-J	SHUT	1-FIS-1595 BYP	SE 5 FT W PENET RM		
1-RE-1595-K	OPEN	1-PI-1595 GAGE ISOL	SE 5 FT W PENET RM		
1-RE-1595-L	OPEN	1-FIS-1595 INL ISOL	SE 5 FT W PENET RM		
1-RE-1595-M	THROTTLED (4)	1-FIS-1595 OUT ISOL	SE 5 FT W PENET RM		
1-RE-3819-H	OPEN	CC RMS INL	CC RM N WALL		
1-RE-3819-I	OPEN	CC RMS INL	CC RM N WALL		

(4) THROTTLE TO 4-6 GPM

ATTACHMENT (1A)
RADIATION MONITORING SYSTEM

VALVE NUMBER	STARTUP/ NORMAL OP. POS	DESCRIPTION	LOCATION	INIT/ DATE	COMMENTS
1-RE-3819-J	SHUT	CC RMS DRN	CC RM N WALL		
1-RE-3819-K	OPEN	CC RMS DISCH	CC RM N WALL		
1-RE-3819-L	----	CC RMS INL CKV	CC RM N WALL		
1-RE-3819-M	----	CC RMS INL CKV	CC RM N WALL		
1-RE-4014-H	OPEN	S/G BD RMS CLR INL	45 FT AUX BLDG BY E PENET RM		
1-RE-4014-I	THROTTLED (5)	S/G BD RMS PP DISCH	45 FT AUX BLDG BY E PENET RM		
1-RE-4014-J	SHUT	1-FIS-4014 BYP	45 FT AUX BLDG BY E PENET RM		
1-RE-4014-K	OPEN	1-PI-4014 GAGE ISOL	45 FT AUX BLDG BY E PENET RM		
1-RE-4014-L	SHUT	S/G BD RMS SMPL	45 FT AUX BLDG BY E PENET RM		
1-RE-4014-M	OPEN	1-FIS-4014 INL	45 FT AUX BLDG BY E PENET RM		
1-RE-4014-N	OPEN	1-FIS-4014 OUT	45 FT AUX BLDG BY E PENET RM		

(5) THROTTLE TO 5-6 GPM

ATTACHMENT (1A)
RADIATION MONITORING SYSTEM

VALVE NUMBER	STARTUP/ NORMAL OP. POS	DESCRIPTION	LOCATION	INIT/ DATE	COMMENTS
1-RE-4095-A	OPEN	1RE4095 INLET ISOL VLV	AB 5 FT E PENET RM N WALL		
1-RE-4095-B	----	1RE4095 PURGE INLET CKV VLV	AB 5 FT E PENET RM N WALL		
1-RE-4095-C	SHUT	1RE4095 PURGE INLET ISOL VLV	AB 5 FT E PENET RM N WALL		
1-RE-4095-D	THROTTLED (1)	1RE4095 FLOW ADJUSTMENT VLV	AB 5 FT E PENET RM N WALL		
1-RE-4095-E	SHUT	1RE4095 INLET GRAB SAMPLE PORT ISOL VLV	AB 5 FT E PENET RM N WALL		
1-RE-4095-F	OPEN	1RE4095 INLET GRAB SAMPLE HDR ISOL VLV	AB 5 FT E PENET RM N WALL		
1-RE-4095-G	SHUT	1RE4095 OUTLET DRN ISOL VLV	AB 5 FT E PENET RM N WALL		
1-RE-4095-H	SHUT	1RE4095 OUTLET GRAB SAMPLE PORT ISOL VLV	AB 5 FT E PENET RM N WALL		
1-RE-4095-I	OPEN	1RE4095 OUTLET ISOL VLV	AB 5 FT E PENET RM N WALL		

(1) Throttled as necessary to prevent cavitation and the loss of sample flow alarm clear.

ATTACHMENT (1A)
RADIATION MONITORING SYSTEM

VALVE NUMBER	STARTUP/ NORMAL OP. POS	DESCRIPTION	LOCATION	INIT/ DATE	COMMENTS
1-RE-5320A-A	OPEN	MN VENT SAMPLE SKIDS INLET VLV	AB 69' FAN RM BY SRW HEAD TKS		
1-RE-5320A-B	OPEN	MN VENT SAMPLE SKID TRAIN A IODINE/PART DET INLET VLV	AB 69' FAN RM @ SAMPLE SKID A		
1-RE-5320A-C	OPEN	MN VENT SAMPLE SKID TRAIN A IODINE/PART DET OUTLET VLV	AB 69' FAN RM @ SAMPLE SKID A		
1-RE-5320A-D	OPEN	MN VENT SAMPLE SKID TRAIN A TRITIUM SAMPLE INLET VLV	AB 69' FAN RM @ SAMPLE SKID A		
1-RE-5320A-E	THROTTLED	MN VENT SAMPLE SKID TRAIN A TRITIUM SAMPLE PP BYP VLV	AB 69' FAN RM @ SAMPLE SKID A		
1-RE-5320A-F	OPEN	MN VENT SAMPLE SKID TRAIN A TRITIUM SAMPLE PP DISCH VLV	AB 69' FAN RM @ SAMPLE SKID A		

ATTACHMENT (1A)
RADIATION MONITORING SYSTEM

VALVE NUMBER	STARTUP/ NORMAL OP. POS	DESCRIPTION	LOCATION	INIT/ DATE	COMMENTS
1-RE-5320A-G	THROTTLED	MN VENT SAMPLE SKID TRAIN A SAMPLE PP BYP VLV	AB 69' FAN RM @ SAMPLE SKID A		
1-RE-5320A-H	----	MN VENT SAMPLE SKID TRAIN A SAMPLE PP DISCH CKV	AB 69' FAN RM @ SAMPLE SKID A		
1-RE-5320A-J	OPEN	MN VENT SAMPLE SKID TRAIN A SAMPLE PP DISCH VLV	AB 69' FAN RM @ SAMPLE SKID A		
1-RE-5320A-K	TO OUTLET	MN VENT SAMPLE SKID TRAIN A OUTLET/GRAB SAMPLE 3-WAY VLV	AB 69' FAN RM @ SAMPLE SKID A		
1-RE-5320A-L	SHUT	MN VENT SAMPLE SKIDS OUTLET TEST CONN	AB 69' FAN RM BY SRW HEAD TKS		
1-RE-5320A-M	OPEN	MN VENT SAMPLE SKIDS OUTLET VLV	AB 69' FAN RM BY SRW HEAD TKS		
1-RE-5320A-CV	----	MN VENT SAMPLE SKID TRAIN A INLET CV	AB 69' FAN RM @ SAMPLE SKID A		

ATTACHMENT (1A)
RADIATION MONITORING SYSTEM

VALVE NUMBER	STARTUP/ NORMAL OP. POS	DESCRIPTION	LOCATION	INIT/ DATE	COMMENTS
1-RE-5320A1-FCV	----	MN VENT SAMPLE SKID TRAIN A SAMPLE PP INLET FCV	AB 69' FAN RM @ SAMPLE SKID A		
1-RE-5320A2-FCV	----	MN VENT SAMPLE SKID TRAIN A TRITIUM SAMPLE PP INLET FCV	AB 69' FAN RM @ SAMPLE SKID A		
1-RE-5320A-SV	----	MN VENT SAMPLE SKID TRAIN A INLET 1CV5320A SV	AB 69' FAN RM @ SAMPLE SKID A		
1-RE-5320A-VBV	----	MN VENT SAMPLE SKID TRAIN A SAMPLE PP INLET VBV	AB 69' FAN RM @ SAMPLE SKID A		
1-RE-5320B-B	OPEN	MN VENT SAMPLE SKID TRAIN B IODINE/PART DET INLET VLV	AB 69' FAN RM @ SAMPLE SKID B		
1-RE-5320B-C	OPEN	MN VENT SAMPLE SKID TRAIN B IODINE/PART DET OUTLET VLV	AB 69' FAN RM @ SAMPLE SKID B		

ATTACHMENT (1A)
RADIATION MONITORING SYSTEM

VALVE NUMBER	STARTUP/ NORMAL OP. POS	DESCRIPTION	LOCATION	INIT/ DATE	COMMENTS
1-RE-5320B-D	OPEN	MN VENT SAMPLE SKID TRAIN B TRITIUM RIG INLET VLV	AB 69' FAN RM @ SAMPLE SKID B		
1-RE-5320B-E	THROTTLED	MN VENT SAMPLE SKID TRAIN B TRITIUM SAMPLE PP BYP VLV	AB 69' FAN RM @ SAMPLE SKID B		
1-RE-5320B-F	OPEN	MN VENT SAMPLE SKID TRAIN B TRITIUM SAMPLE PP DISCH VLV	AB 69' FAN RM @ SAMPLE SKID B		
1-RE-5320B-G	THROTTLED	MN VENT SAMPLE SKID TRAIN B SAMPLE PP BYP VLV	AB 69' FAN RM @ SAMPLE SKID B		
1-RE-5320B-H	----	MN VENT SAMPLE SKID TRAIN B SAMPLE PP DISCH CKV	AB 69' FAN RM @ SAMPLE SKID B		
1-RE-5320B-J	OPEN	MN VENT SAMPLE SKID TRAIN B SAMPLE PP DISCH VLV	AB 69' FAN RM @ SAMPLE SKID B		

ATTACHMENT (1A)
RADIATION MONITORING SYSTEM

VALVE NUMBER	STARTUP/ NORMAL OP. POS	DESCRIPTION	LOCATION	INIT/ DATE	COMMENTS
1-RE-5320B-K	TO OUTLET	MN VENT SAMPLE SKID TRAIN B OUTLET/GRAB SAMPLE 3-WAY VLV	AB 69' FAN RM @ SAMPLE SKID B		
1-RE-5320B-CV	----	MN VENT SAMPLE SKID TRAIN B INLET CV	AB 69' FAN RM @ SAMPLE SKID B		
1-RE-5320B1-FCV	----	MN VENT SAMPLE SKID TRAIN B SAMPLE PP INLET FCV	AB 69' FAN RM @ SAMPLE SKID B		
1-RE-5320B2-FCV	----	MN VENT SAMPLE SKID TRAIN B TRITIUM SAMPLE PP INLET FCV	AB 69' FAN RM @ SAMPLE SKID B		
1-RE-5320B-SV	----	MN VENT SAMPLE SKID TRAIN B INLET 1CV5320B SV	AB 69' FAN RM @ SAMPLE SKID B		
1-RE-5320B-VBV	----	MN VENT SAMPLE SKID TRAIN B SAMPLE PP INLET VBV	AB 69' FAN RM @ SAMPLE SKID B		

ATTACHMENT (1A)
RADIATION MONITORING SYSTEM

VALVE NUMBER	STARTUP/ NORMAL OP. POS	DESCRIPTION	LOCATION	INIT/ DATE	COMMENTS
1-RE-5406-H	THROTTLED (3)	ECCS PUMP ROOM VENTILATION RADIATION MONITOR INLET ISOLATION VALVE	69' FAN RM W MN FAN SUCT PLENUM		
1-RE-5406-J	OPEN	ECCS PUMP ROOM VENTILATION RADIATION MONITOR OUTLET ISOLATION VALVE	69' FAN RM W MN FAN SUCT PLENUM		
1-RE-5406-I	SHUT	ECCS PUMP ROOM VENTILATION RADIATION MONITOR PURGE INLET ISOLATION VALVE	69' FAN RM W MN FAN SUCT PLENUM		
1-RE-5410-H	THROTTLED (3)	WASTE PROCESSING MONITOR PUMP SUCTION ISOLATION VALVE	U-1 69' FAN RM W OF PLENUM		
1-RE-5410-I	SHUT	WASTE PROCESSING MONITOR PURGE SUCTION FILTER ISOLATION VALVE	U-1 69' FAN RM W OF PLENUM		

(3) THROTTLE TO 8-12 SCFM

ATTACHMENT (1A)
RADIATION MONITORING SYSTEM

VALVE NUMBER	STARTUP/ NORMAL OP. POS	DESCRIPTION	LOCATION	INIT/ DATE	COMMENTS
1-RE-5410-J	OPEN	WASTE PROCESSING MONITOR PUMP DISCHARGE ISOLATION VALVE	U-1 69' FAN RM W OF PLENUM		
1-RE-5414-H	OPEN	MN VENT PART DET INL	BY SRW HD TK		
1-RE-5414-I	SHUT	MN VENT RMS INLET TEST CONN	AB 69' FAN RM BY SRW HEAD TKS		
1-RE-5414-M	SHUT	MN VENT INL FILT ISOL	BY SRW HD TK		
1-RE-5414-N	OPEN	MN VENT PART DET OUT	BY SRW HD TK		
1-RE-5414-P	THROTTLED (3)	MN VENT GAS DET INL	BY SRW HD TK		
1-RE-5414-Q	SHUT	MN VENT GAS DET BYP	BY SRW HD TK		
1-RE-5414-R	OPEN	MN VENT GAS DET OUT	BY SRW HD TK		
1-RE-5414-S	OPEN	MN VENT DRN TRAP DRN VLV	BY SRW HD TK		
1-RE-5414-T	SHUT	MN VENT RMS PP SUCT VENT	BY SRW HD TK		

(3) THROTTLE TO 8-12 SCFM

ATTACHMENT (1B)
RADIATION MONITORING SYSTEM

VALVE NUMBER	STARTUP/ NORMAL OP. POS	DESCRIPTION	LOCATION	INIT/ DATE	COMMENTS
2-CRM-1	OPEN	CNTMT APD INLET	5 FT AUX BLDG BY E PENET RM		
2-CRM-2	OPEN	2-PI-5280 ISOL	5 FT AUX BLDG AT CONTAINMENT RMS SKID		
2-CRM-3	SHUT	CNTMT AIR PART DET PURGE INLET ISOL	5 FT AUX BLDG AT CONTAINMENT RMS SKID		
2-CRM-4	SHUT	2-RE-5280 INLET TEST PORT ISOL	5 FT AUX BLDG AT CONTAINMENT RMS SKID		
2-CRM-5	AS REQ	CNTMT ATMOS PP 21 SUCT	5 FT AUX BLDG AT CONTAINMENT RMS SKID		
2-CRM-6	AS REQ	CNTMT ATMOS PP 22 SUCT	5 FT AUX BLDG AT CONTAINMENT RMS SKID		
2-CRM-7	OPEN	PART DET INL	5 FT AUX BLDG AT CONTAINMENT RMS SKID		
2-CRM-8	OPEN	PART DET OUT	5 FT AUX BLDG AT CONTAINMENT RMS SKID		
2-CRM-9	OPEN	GAS DET INL	5 FT AUX BLDG AT CONTAINMENT RMS SKID		
2-CRM-10	OPEN	IODINE FILTER OUTLET	5 FT AUX BLDG AT CONTAINMENT RMS SKID		

ATTACHMENT (1B)
RADIATION MONITORING SYSTEM

VALVE NUMBER	STARTUP/ NORMAL OP. POS	DESCRIPTION	LOCATION	INIT/ DATE	COMMENTS
2-CRM-11	OPEN	GAS DET OUT	5 FT AUX BLDG AT CONTAINMENT RMS SKID		
2-CRM-12	AS REQ	CNTMT ATMOS PP 21 DISCH	5 FT AUX BLDG AT CONTAINMENT RMS SKID		
2-CRM-13	AS REQ	CNTMT ATMOS PP 22 DISCH	5 FT AUX BLDG AT CONTAINMENT RMS SKID		
2-CRM-14	OPEN	2-FM-5280 OUTLET	5 FT AUX BLDG AT CONTAINMENT RMS SKID		
2-CRM-15	OPEN	CNTMT APD OUT	5 FT AUX BLDG BY E PENET RM		
2-CRM-16	OPEN	2-PI-5280A ISOL	5 FT AUX BLDG AT CONTAINMENT RMS SKID		
2-CRM-17	SHUT	2-RE-5281 OUTLET DRN	5 FT AUX BLDG AT CONTAINMENT RMS SKID		
2-CRM-18	SHUT	2-RE-5281 OUTLET CALIB PORT ISOL	5 FT AUX BLDG AT CONTAINMENT RMS SKID		
2-CRM-19	SHUT	2-FM-5280 CALIB PORT ISOL	5 FT AUX BLDG AT CONTAINMENT RMS SKID		
2-CRM-20	SHUT	CNTMT APD INLET SAMPLE ISOL	5 FT AUX BLDG AT CONTAINMENT RMS SKID		

ATTACHMENT (1B)
RADIATION MONITORING SYSTEM

VALVE NUMBER	STARTUP/ NORMAL OP. POS	DESCRIPTION	LOCATION	INIT/ DATE	COMMENTS
2-CRM-21	SHUT	CNTMT APD INLET SAMPLE B/U ISOL	5 FT AUX BLDG AT CONTAINMENT RMS SKID		
2-CRM-22	SHUT	PART DET OUTLET DRN ISOL	5 FT AUX BLDG AT CONTAINMENT RMS SKID		
2-CRM-5279-SV	----	CNTMT ATMOS RMS INLET	5 FT AUX BLDG AT CONTAINMENT RMS SKID		
2-CRM-5280	----	CNTMT ATMOS PURGE INLET CHECK VALVE	5 FT AUX BLDG AT CONTAINMENT RMS SKID		
2-CRM-5282-SV	----	CNTMT ATMOS RMS PURGE	5 FT AUX BLDG AT CONTAINMENT RMS SKID		
2-CRM-5292-CV	OPEN(1)/SHUT(2)	CNTMT RMS ISOL VLV	27 FT AUX BLDG BY E PENET RM		
2-CRM-5292-SV	----	CNTMT RMS ISOL VLV SV	27 FT AUX BLDG BY E PENET RM AT DOOR		
2-RE-102	LOCKED SHUT CAPPED	CNTMT RMS TEST CONN ISOL	27 FT AUX BLDG BY E PENET RM		
2-RE-103	SHUT	CNTMT ATMOS TELLTALE	27 FT AUX BLDG BY E PENET RM		

(2) SHUT if Containment RMS Pump is secured.
(1) OPEN if Containment RMS Pump in service.

ATTACHMENT (1B)
RADIATION MONITORING SYSTEM

VALVE NUMBER	STARTUP/ NORMAL OP. POS	DESCRIPTION	LOCATION	INIT/ DATE	COMMENTS
2-RE-104	OPEN	CNTMT ATMOS SMPL ISOL	5 FT AUX BLDG BY E PENET RM		
2-RE-107	OPEN	MN VENT SAMPLE SKID TRAIN A INLET 2-RE-5320A-CV AIR ISOL VLV	AB 69' FAN RM @ SAMPLE SKID A		
2-RE-108	OPEN	MN VENT SAMPLE SKID TRAIN B INLET 2-RE-5320B-CV AIR ISOL VLV	AB 69' FAN RM @ SAMPLE SKID B		
2-RE-1595-H	OPEN	SRW RMS INL	AUX BLDG SE OF W PENET RM		
2-RE-1595-I	OPEN	SRW RMS PP DISCH	AUX BLDG SE OF W PENET RM		
2-RE-1595-J	SHUT	2-FIS-1595 BYP	AUX BLDG SE OF W PENET RM		
2-RE-1595-K	OPEN	2-PI-1595 GAGE ISOL	AUX BLDG SE OF W PENET RM		
2-RE-1595-L	OPEN	2-FIS-1595 INL ISOL	AUX BLDG SE OF W PENET RM		

ATTACHMENT (1B)
RADIATION MONITORING SYSTEM

VALVE NUMBER	STARTUP/ NORMAL OP. POS	DESCRIPTION	LOCATION	INIT/ DATE	COMMENTS
2-RE-1595-M	THROTTLED (4)	2-FIS-1595 OUT ISOL	AUX BLDG SE OF W PENET RM		
2-RE-3819-H	OPEN	CC RMS INL	CC RM S WALL		
2-RE-3819-I	OPEN	CC RMS INL	CC RM S WALL		
2-RE-3819-J	SHUT	CC RMS DRN	CC RM S WALL		
2-RE-3819-K	OPEN	CC RMS DISCH	CC RM S WALL		
2-RE-3819-L	----	CC RMS INL CKV	CC RM S WALL		
2-RE-3819-M	----	CC RMS INL CKV	CC RM S WALL		
2-RE-4014-H	OPEN	S/G BD RMS CLR INL	45 FT AUX BLDG BY E PENET RM		
2-RE-4014-I	THROTTLED (5)	S/G BD RMS PP DISCH	45 FT AUX BLDG BY E PENET RM		
2-RE-4014-J	SHUT	2-FIS-4014 BYP	45 FT AUX BLDG BY E PENET RM		
2-RE-4014-K	OPEN	2-PI-4014 GAGE ISOL	45 FT AUX BLDG BY E PENET RM		

(4) THROTTLE TO 4-6 GPM
(5) THROTTLE TO 5-6 GPM

ATTACHMENT (1B)
RADIATION MONITORING SYSTEM

VALVE NUMBER	STARTUP/ NORMAL OP. POS	DESCRIPTION	LOCATION	INIT/ DATE	COMMENTS
2-RE-4014-M	OPEN	2-FIS-4014 INL ISOL	45 FT AUX BLDG BY E PENET RM		
2-RE-4014-N	OPEN	2-FIS-4014 OUT	45 FT AUX BLDG BY E PENET RM		
2-RE-4095-A	OPEN	2RE4095 INLET ISOL VLV	AB 5 FT E PENET RM S WALL		
2-RE-4095-B	----	2RE4095 PURGE INLET CKV VLV	AB 5 FT E PENET RM S WALL		
2-RE-4095-C	SHUT	2RE4095 PURGE INLET ISOL VLV	AB 5 FT E PENET RM S WALL		
2-RE-4095-D	THROTTLED (1)	2RE4095 FLOW ADJUSTMENT VLV	AB 5 FT E PENET RM S WALL		
2-RE-4095-E	SHUT	2RE4095 INLET GRAB SAMPLE PORT ISOL VLV	AB 5 FT E PENET RM S WALL		
2-RE-4095-F	OPEN	2RE4095 INLET GRAB SAMPLE HDR ISOL VLV	AB 5 FT E PENET RM S WALL		
2-RE-4095-G	SHUT	2RE4095 OUTLET DRN ISOL VLV	AB 5 FT E PENET RM S WALL		

(1) Throttled as necessary to prevent cavitation and the loss of sample flow alarm clear.

ATTACHMENT (1B)
RADIATION MONITORING SYSTEM

VALVE NUMBER	STARTUP/ NORMAL OP. POS	DESCRIPTION	LOCATION	INIT/ DATE	COMMENTS
2-RE-4095-H	SHUT	2RE4095 OUTLET GRAB SAMPLE PORT ISOL VLV	AB 5 FT E PENET RM S WALL		
2-RE-4095-I	OPEN	2RE4095 OUTLET ISOL VLV	AB 5 FT E PENET RM S WALL		
2-RE-5320A-A	OPEN	MN VENT SAMPLE SKIDS INLET VLV	AB 69' FAN RM BY SRW HEAD TKS		
2-RE-5320A-B	OPEN	MN VENT SAMPLE SKID TRAIN A IODINE / PART SAMPLE INLET VLV	AB 69' FAN RM @ SAMPLE SKID A		
2-RE-5320A-C	OPEN	MN VENT SAMPLE SKID TRAIN A IODINE / PART SAMPLE OUTLET VLV	AB 69' FAN RM @ SAMPLE SKID A		
2-RE-5320A-D	OPEN	MN VENT SAMPLE SKID TRAIN A TRITIUM SAMPLE INLET VLV	AB 69' FAN RM @ SAMPLE SKID A		
2-RE-5320A-E	THROTTLED	MN VENT SAMPLE SKID TRAIN A TRITIUM SAMPLE PP BYP VLV	AB 69' FAN RM @ SAMPLE SKID A		

ATTACHMENT (1B)
RADIATION MONITORING SYSTEM

VALVE NUMBER	STARTUP/ NORMAL OP. POS	DESCRIPTION	LOCATION	INIT/ DATE	COMMENTS
2-RE-5320A-F	OPEN	MN VENT SAMPLE SKID TRAIN A TRITIUM SAMPLE PP DISCH VLV	AB 69' FAN RM @ SAMPLE SKID A		
2-RE-5320A-G	THROTTLED	MN VENT SAMPLE SKID TRAIN A SAMPLE PP BYP VLV	AB 69' FAN RM @ SAMPLE SKID A		
2-RE-5320A-H	-----	MN VENT SAMPLE SKID TRAIN A SAMPLE PP DISCH CKV	AB 69' FAN RM @ SAMPLE SKID A		
2-RE-5320A-J	OPEN	MN VENT SAMPLE SKID TRAIN A SAMPLE PP DISCH VLV	AB 69' FAN RM @ SAMPLE SKID A		
2-RE-5320A-K	TO OUTLET	MN VENT SAMPLE SKID TRAIN A OUTLET / GRAB SAMPLE 3-WAY VLV	AB 69' FAN RM @ SAMPLE SKID A		
2-RE-5320A-L	SHUT	MN VENT SAMPLE SKIDS OUTLET TEST CONN	AB 69' FAN RM BY SRW HEAD TKS		
2-RE-5320A-M	OPEN	MN VENT SAMPLE SKIDS OUTLET VLV	AB 69' FAN RM BY SRW HEAD TKS		

ATTACHMENT (1B)
RADIATION MONITORING SYSTEM

VALVE NUMBER	STARTUP/ NORMAL OP. POS	DESCRIPTION	LOCATION	INIT/ DATE	COMMENTS
2-RE-5320A-CV	-----	MN VENT SAMPLE SKID TRAIN A INLET CV	AB 69' FAN RM @ SAMPLE SKID A		
2-RE-5320A1-FCV	-----	MN VENT SAMPLE SKID TRAIN A SAMPLE PP INLET FCV	AB 69' FAN RM @ SAMPLE SKID A		
2-RE-5320A2-FCV	-----	MN VENT SAMPLE SKID TRAIN A TRITIUM SAMPLE PP INLET FCV	AB 69' FAN RM @ SAMPLE SKID A		
2-RE-5320A-SV	-----	MN VENT SAMPLE SKID TRAIN A INLET 2CV5320A SV	AB 69' FAN RM @ SAMPLE SKID A		
2-RE-5320A-VBV	-----	MN VENT SAMPLE SKID TRAIN A SAMPLE PP INLET VBV	AB 69' FAN RM @ SAMPLE SKID A		
2-RE-5320B-B	OPEN	MN VENT SAMPLE SKID TRAIN B IODINE / PART SAMPLE INLET VLV	AB 69' FAN RM @ SAMPLE SKID B		
2-RE-5320B-C	OPEN	MN VENT SAMPLE SKID TRAIN B IODINE / PART SAMPLE OUTLET VLV	AB 69' FAN RM @ SAMPLE SKID B		

ATTACHMENT (1B)
RADIATION MONITORING SYSTEM

VALVE NUMBER	STARTUP/ NORMAL OP. POS	DESCRIPTION	LOCATION	INIT/ DATE	COMMENTS
2-RE-5320B-D	OPEN	MN VENT SAMPLE SKID TRAIN B TRITIUM SAMPLE INLET VLV	AB 69' FAN RM @ SAMPLE SKID B		
2-RE-5320B-E	THROTTLED	MN VENT SAMPLE SKID TRAIN B TRITIUM SAMPLE PP BYP VLV	AB 69' FAN RM @ SAMPLE SKID B		
2-RE-5320B-F	OPEN	MN VENT SAMPLE SKID TRAIN B TRITIUM SAMPLE PP DISCH VLV	AB 69' FAN RM @ SAMPLE SKID B		
2-RE-5320B-G	THROTTLED	MN VENT SAMPLE SKID TRAIN B SAMPLE PP BYP VLV	AB 69' FAN RM @ SAMPLE SKID B		
2-RE-5320B-H	-----	MN VENT SAMPLE SKID TRAIN B SAMPLE PP DISCH CKV	AB 69' FAN RM @ SAMPLE SKID B		
2-RE-5320B-J	OPEN	MN VENT SAMPLE SKID TRAIN B SAMPLE PP DISCH VLV	AB 69' FAN RM @ SAMPLE SKID B		

ATTACHMENT (1B)
RADIATION MONITORING SYSTEM

VALVE NUMBER	STARTUP/ NORMAL OP. POS	DESCRIPTION	LOCATION	INIT/ DATE	COMMENTS
2-RE-5320B-K	TO OUTLET	MN VENT SAMPLE SKID TRAIN B OUTLET / GRAB SAMPLE 3-WAY VLV	AB 69' FAN RM @ SAMPLE SKID B		
2-RE-5320B-CV	-----	MN VENT SAMPLE SKID TRAIN B INLET CV	AB 69' FAN RM @ SAMPLE SKID B		
2-RE-5320B1-FCV	-----	MN VENT SAMPLE SKID TRAIN B SAMPLE PP INLET FCV	AB 69' FAN RM @ SAMPLE SKID B		
2-RE-5320B2-FCV	-----	MN VENT SAMPLE SKID TRAIN B TRITIUM SAMPLE PP INLET FCV	AB 69' FAN RM @ SAMPLE SKID B		
2-RE-5320B-SV	-----	MN VENT SAMPLE SKID TRAIN B INLET 2CV5320B SV	AB 69' FAN RM @ SAMPLE SKID B		
2-RE-5320B-VBV	-----	MN VENT SAMPLE SKID TRAIN B SAMPLE PP INLET VBV	AB 69' FAN RM @ SAMPLE SKID B		

ATTACHMENT (1B)
RADIATION MONITORING SYSTEM

VALVE NUMBER	STARTUP/ NORMAL OP. POS	DESCRIPTION	LOCATION	INIT/ DATE	COMMENTS
2-RE-5406-H	THROT (3)	ECCS PUMP ROOM VENTILATION RADIATION MONITOR INLET ISOLATION VALVE	69' FAN RM W MN FAN SUCT PLENUM		
2-RE-5406-I	SHUT	ECCS PUMP ROOM VENTILATION RADIATION MONITOR PURGE INLET ISOLATION VALVE	69' FAN RM W MN FAN SUCT PLENUM		
2-RE-5406-J	OPEN	ECCS PUMP ROOM VENTILATION RADIATION MONITOR OUTLET ISOLATION VALVE	69' FAN RM W MN FAN SUCT PLENUM		
2-RE-5410-H	THROT (3)	WASTE PROCESSING MONITOR PUMP SUCTION ISOLATION VALVE	U-2 69' FAN RM W OF PLENUM		
2-RE-5410-I	SHUT	WASTE PROCESSING MONITOR PURGE SUCTION FILTER ISOLATION VALVE	U-2 69' FAN RM W OF PLENUM		

(3) THROTTLE TO 8-12 SCFM

ATTACHMENT (1B)
RADIATION MONITORING SYSTEM

VALVE NUMBER	STARTUP/ NORMAL OP. POS	DESCRIPTION	LOCATION	INIT/ DATE	COMMENTS
2-RE-5410-J	OPEN	WASTE PROCESSING MONITOR PUMP DISCHARGE ISOLATION VALVE	U-2 69' FAN RM W OF PLENUM		
2-RE-5414-F	SHUT	MN VENT DRN TRAP TEST CONN	BY SRW HD TK		
2-RE-5414-G	SHUT	MN VENT DRN TRAP TEST CONN	BY SRW HD TK		
2-RE-5414-H	OPEN	MN VENT PART DET INL	BY SRW HD TK		
2-RE-5414-I	SHUT	MN VENT RMS INLET TEST CONN	AB 69' FAN RM BY SRW HD TKS		
2-RE-5414-K	SHUT	MN VENT RMS OUTLET TEST CONN	AB 69' FAN RM BY SRW HD TKS		
2-RE-5414-L	SHUT	MN VENT RMS OUT SMPL	BY SRW HD TK		
2-RE-5414-M	SHUT	MN VENT INL FILT ISOL	BY SRW HD TK		
2-RE-5414-N	OPEN	MN VENT PART DET OUT	BY SRW HD TK		

ATTACHMENT (1B)
RADIATION MONITORING SYSTEM

VALVE NUMBER	STARTUP/ NORMAL OP. POS	DESCRIPTION	LOCATION	INIT/ DATE	COMMENTS
2-RE-5414-P	THROTTLED (3)	MN VENT GAS DET INL	BY SRW HD TK		
2-RE-5414-Q	SHUT	MN VENT GAS DET BYP	BY SRW HD TK		
2-RE-5414-R	OPEN	MN VENT GAS DET OUT	BY SRW HD TK		
2-RE-5414-S	OPEN	MN VENT DRN TRAP VLV	BY SRW HD TK		
2-RE-5414-T	SHUT	MN VENT RMS PP SUCT VENT	BY SRW HD TK		
2-RE-5414-U	SHUT	MN VENT RMS PP 21 SUCT B/U VENT VLV	BY SRW HD TK		
2-RE-5414-V	SHUT	MN VENT RMS DISCH VENT	BY SRW HD TK		
2-RE-5414-Z	SHUT	MN VENT DRN TRAP DRN VLV	BY SRW HD TK		

(3) THROTTLE TO 8-12 SCFM

ATTACHMENT (1C)
RADIATION MONITORING SYSTEM

VALVE NUMBER	STARTUP/ NORMAL OP. POS	DESCRIPTION	LOCATION	INIT/ DATE	COMMENTS
0-RE-2201-A	OPEN	ORE2201 INLET ISOL VLV	AB -10 FT 1C63 E WALL		
0-RE-2201-B	----	ORE2201 PURGE INLET CKV VLV	AB -10 FT 1C63 E WALL		
0-RE-2201-C	SHUT	ORE2201 PURGE INLET ISOL VLV	AB -10 FT 1C63 E WALL		
0-RE-2201-D	THROTTLED (1)	ORE2201 FLOW ADJUSTMENT VLV	AB -10 FT 1C63 E WALL		
0-RE-2201-E	SHUT	ORE2201 INLET GRAB SAMPLE PORT ISOL VLV	AB -10 FT 1C63 E WALL		
0-RE-2201-F	OPEN	ORE2201 INLET GRAB SAMPLE HDR ISOL VLV	AB -10 FT 1C63 E WALL		
0-RE-2201-G	SHUT	ORE2201 OUTLET DRN ISOL VLV	AB -10 FT 1C63 E WALL		
0-RE-2201-H	SHUT	ORE2201 OUTLET GRAB SAMPLE PORT ISOL VLV	AB -10 FT 1C63 E WALL		
0-RE-2201-I	OPEN	ORE2201 OUTLET ISOL VLV	AB -10 FT 1C63 E WALL		

(1) Throttled as necessary to prevent cavitation and the loss of sample flow alarm clear.

ATTACHMENT (1C)
RADIATION MONITORING SYSTEM

VALVE NUMBER	STARTUP/ NORMAL OP. POS	DESCRIPTION	LOCATION	INIT/ DATE	COMMENTS
0-RE-2201-J	OPEN	ORE2201 FLOW SWITCH ISOL VLV	AB -10 FT 1C63 E WALL		
0-RE-5350-H	THROTTLED (1)	CR RAD MON INL	SKID MOUNT NE MN EXH PLENUM		
0-RE-5350-I	THROTTLED (1)	CR RAD MON INL	SKID MOUNT NE MN EXH PLENUM		
0-RE-5350-K	SHUT	CONTROL ROOM RADIATION MONITOR PURGE FILTER ISOLATION VALVE	E WALL U-1 69' FAN RM		
0-RE-5350-L	OPEN	CR RAD MON OUT	SKID MOUNT NE MN EXH PLENUM		
0-RE-5420-H	THROTTLED (2)	FUEL HANDLING AREA EXHAUST RAD MONITOR PURGE INLET ISOLATION VALVE	U-1 69' FAN RM SE CORNER		

(1) 0-RE-5350-H AND 0-RE-5350-I SHOULD BE OPEN AN EQUAL AMOUNT TO ACHIEVE APPROXIMATELY 10 SCFM CR RMS FLOW (APROXIMATELY 1 TURN OPEN FROM FULLY SHUT)
(2) THROTTLE TO 8-12 SCFM

ATTACHMENT (1C)
RADIATION MONITORING SYSTEM

VALVE NUMBER	STARTUP/ NORMAL OP. POS	DESCRIPTION	LOCATION	INIT/ DATE	COMMENTS
0-RE-5420-I	SHUT	FUEL HANDLING AREA EXHAUST RAD MONITOR PURGE INLET FILTER ISOLATION VALVE	U-1 69' FAN RM SE CORNER		
0-RE-5420-K	OPEN	FUEL HANDLING AREA EXHAUST RAD MONITOR OUTLET ISOLATION VALVE	U-1 69' FAN RM SE CORNER		
0-RE-5425-H	THROTTLED (2)	ACCESS CONTROL AREA VENTILATION RAD MONITOR INLET ISOLATION VALVE	U-2 69' FAN RM E WALL MID ROOM		
0-RE-5425-I	SHUT	ACCESS CONTROL AREA VENTILATION RAD MONITOR PURGE FILTER ISOLATION VALVE	U-2 69' FAN RM E WALL MID ROOM		
0-RE-5425-K	OPEN	ACCESS CONTROL AREA VENTILATION RAD MONITOR OUTLET ISOLATION VALVE	U-2 69' FAN RM E WALL MID ROOM		

(2) THROTTLE TO 8-12 SCFM

ATTACHMENT (1D)
RADIATION MONITORING SYSTEM

BREAKER NUMBER	NORMAL OP. POS	DESCRIPTION	LOCATION	INIT/ DATE	COMMENTS
1Y01-15	ON	RAD. MONITORING SYS. CHANNEL 5316A CONTROL & INSTR. PWR 1C22A			OI-26B
1Y01-19	ON	MAIN STEAM RADIATION MONITOR/ CONTAINMENT HIGH RANGE RADIATION MONITOR 1-RE-5317A 2C24B			OI-26B
1Y01-31	ON	MAIN STEAM/N-16 RADIATION MONITORING SYSTEM 1RIT5421/1RIT5421A			OI-26B
1Y02-15	ON	RAD. MONITORING SYS. CHANNEL 5316B CONTROL & INSTR. PWR 1C22A			OI-26B
1Y02-17	ON	MAIN STEAM EFF RAD MONITORING SYSTEM 2C24B			OI-26B
1Y02-23	ON	MAIN STEAM/N-16 RADIATION MONITORING SYSTEM 1RIT5422/1RIT5422A			OI-26B

ATTACHMENT (1D)
RADIATION MONITORING SYSTEM

BREAKER NUMBER	NORMAL OP. POS	DESCRIPTION	LOCATION	INIT/ DATE	COMMENTS
1Y03-15	ON	RAD. MONITORING SYS. CHANNEL 5316C CONTROL & INSTR. PWR 1C22B			OI-26B
1Y03-19	ON	CNTMT HIGH RANGE RAD MON PWR SUPPLY 1-RI-5317B 1 E/E-5317B (ISOL) 1Y0319/X AUX RELAY 1-MOV-6900			OI-26B
1Y04-15	ON	RAD. MONITORING SYS. CHANNEL 5316D CONTROL & INSTR. PWR 1C22B			OI-26B
1Y09A-25	ON	RAD. MONITORING SYS. CABINET 1 A INSTRUMENT POWER 1C22A			OI-26B
1Y09A-26	ON	RAD MON SYS CABINET 1A CONTROL POWER 1C22A & 1C22G			OI-26B

ATTACHMENT (1D)
RADIATION MONITORING SYSTEM

BREAKER NUMBER	NORMAL OP. POS	DESCRIPTION	LOCATION	INIT/ DATE	COMMENTS
1Y09B-51	ON	RAD. MONITORING SYS. COMMON CABINET A INSTRUMENT POWER 1C22C			OI-26B
1Y09B-52	ON	RAD. MONITORING SYS. COMMON CABINET A CONTROL POWER 1C22C			OI-26B
1Y10A-25	ON	RADIATION MONITORING SYSTEM CAB. 1B INSTRUMENT POWER 1C22B			OI-26B
1Y10A-26	ON	RADIATION MONITORING SYSTEM CAB. 1B INSTRUMENT POWER 1C22B			OI-26B
1Y10B-48	ON	SG BLOWDOWN REC SYSTEM 1C107			OI-26B
1Y10B-51	ON	RADIATION MONITORING SYS. COMMON CAB. B INSTRUMENT POWER 1C22D			OI-26B

ATTACHMENT (1D)
RADIATION MONITORING SYSTEM

BREAKER NUMBER	NORMAL OP. POS	DESCRIPTION	LOCATION	INIT/ DATE	COMMENTS
1Y10B-52	ON	RADIATION MONITORING SYS. COMMON CAB. B INSTRUMENT POWER 1C22D			OI-26B
2Y01-15	ON	RADIATION MONITORING SYSTEM 1C22E			OI-26B
2Y01-19	ON	MAIN STEAM RADIATION MONITOR/ CONTAINMENT HIGH RANGE RADIATION MONITOR 2-RE-5317A 2C24B			OI-26B
2Y01-31	ON	MAIN STEAM/N-16 RADIATION MONITORING SYSTEM 2RIT5421/2RIT5421A			OI-26B
2Y02-15	ON	RADIATION MONITORING SYSTEM 1C22E			OI-26B
2Y02-17	ON	MAIN STEAM EFF RAD MONITORING SYSTEM 2C24B			OI-26B

ATTACHMENT (1D)
RADIATION MONITORING SYSTEM

BREAKER NUMBER	NORMAL OP. POS	DESCRIPTION	LOCATION	INIT/ DATE	COMMENTS
2Y02-27	ON	MAIN STEAM/N-16 RADIATION MONITORING SYSTEM 2RIT5422/2RIT5422A			OI-26B
2Y03-15	ON	RADIATION MONITORING SYSTEM 1C22F			OI-26B
2Y03-19	ON	CNTMT HIGH RANGE RAD MON PWR SUPPLY 2-RI-5317B 2 E/E-5317B (ISOL) 2Y0319/X AUX RELAY 2-MOV-6901			OI-26B
2Y04-15	ON	RADIATION MONITORING SYSTEM 1C22F			OI-26B
2Y09A-34	ON	RAD. MON. SYSTEM CAB. 2A INST. PWR. 1C22E			OI-26B
2Y09A-35	ON	RAD MON SYS CABINET 2A CONTROL POWER 1C22E & 1C22G			OI-26B

ATTACHMENT (1D)
RADIATION MONITORING SYSTEM

BREAKER NUMBER	NORMAL OP. POS	DESCRIPTION	LOCATION	INIT/ DATE	COMMENTS
2Y10A-25	ON	RAD. MON. SYSTEM CAB. 2B INST. PWR. 1C22F			OI-26B
2Y10A-26	ON	RAD. MON. SYSTEM CAB. 2B CONTROL PWR. 1C22F			OI-26B
2Y10B-34	ON	SG BLOWDOWN REC SYSTEM 2C107			OI-26B

ATTACHMENT (1E)
RADIATION MONITORING SYSTEM - U-1 CONTAINMENT VALVE ALIGNMENT

VALVE NUMBER	STARTUP/ NORMAL OP. POS	DESCRIPTION	LOCATION	INIT/ DATE	COMMENTS
1-CRM-5277-SV	----	CNTMT ATMOS RMS INL	27 FT CNTMT E		
1-CRM-5278-SV	----	CNTMT PURGE RMS INL	27 FT CNTMT BY CPA		
1-CRM-5291-CV	OPEN(1)/SHUT(2)	CNTMT RMS ISOL	27 FT CNTMT E		
1-CRM-5291-SV	----	CNTMT RMS ISOL VLV SV	27 FT CNTMT E		
1-RE-101	OPEN	CNTMT PURGE SMPL ISOL	27 FT CNTMT NEAR CPA		

(1) OPEN if Containment RMS Pump is in service.
(2) SHUT if Containment RMS Pump is secured.

ATTACHMENT (1F)
RADIATION MONITORING SYSTEM - U-2 CONTAINMENT VALVE ALIGNMENT

VALVE NUMBER	STARTUP/ NORMAL OP. POS	DESCRIPTION	LOCATION	INIT/ DATE	COMMENTS
2-CRM-5277-SV	----	CNTMT ATMOS RMS INL	27 FT CNTMT E		
2-CRM-5278-SV	----	CNTMT PURGE RMS INL	27 FT CNTMT E		
2-CRM-5291-CV	OPEN(1)/SHUT(2)	CNTMT RMS ISOL VLV	27 FT CNTMT E		
2-CRM-5291-SV	----	CNTMT ATMOSPHERE ISOLATION CV-5291 SOLENOID VALVE	27 FT CNTMT E		
2-RE-101	OPEN	CNTMT PURGE SMPL ISOL VALVE	CNTMT BY CPA		
2-RE-105	OPEN	CNTMT ATMOS SMPL ISOL	27 FT CNTMT		
2-RE-106	SHUT CAPPED	CNTMT RMS TEST CONN ISOL	27 FT CNTMT		

(1) OPEN if Containment RMS Pump is in service.
(2) SHUT if Containment RMS Pump is secured.

CALVERT CLIFFS NUCLEAR POWER PLANT

UNIT ONE AND TWO

OI-41A

HYDROGEN RECOMBINERS

REVISION 10

SAFETY RELATED

CONTINUOUS USE

Approval Authority: M. V. Seckens

Effective Date: 6/8/00

LIST OF EFFECTIVE PAGES

PAGE NUMBERS	REVISION
1-9	10

FIGURES	REVISION
1, Pg 1	10

PROCEDURE ALTERATIONS

PAGES	REVISION/CHANGE
4-8	1002

TABLE OF CONTENTS

	TITLE	PAGE
1.0	PURPOSE	4
2.0	APPLICABILITY/SCOPE	4
3.0	REFERENCES AND DEFINITIONS	4
4.0	PREREQUISITES	4
5.0	PRECAUTIONS	4
6.0	PERFORMANCE	5
6.1	HYDROGEN RECOMBINER STARTUP (11, 12, 21, 22)	5
6.2	HYDROGEN RECOMBINER SHUTDOWN (11, 12, 21, 22)	8
7.0	POST PERFORMANCE ACTIVITIES	9
8.0	BASES	9
9.0	RECORDS	9
10.0	ATTACHMENTS	9

1.0 PURPOSE

A. The purpose of this procedure is to provide instructions to Operations for operating the hydrogen recombiners.

2.0 APPLICABILITY/SCOPE

A. This procedure will cover the operational aspects of the hydrogen recombiners including startup and shutdown.

3.0 REFERENCES AND DEFINITIONS

3.1 DEVELOPMENTAL REFERENCES

A. Drawings

1. 1E-76 (61076) Sheet 38, Electric Hydrogen Recombiners Wiring Schematic Unit-1

2. 2E-76 (63076) Sheet 38, Electric Hydrogen Recombiners Wiring Schematic Unit-2

B. Codes and Standards

1. NONE. 1002

C. Technical Manuals

1. 12-803-13, Electric Hydrogen Recombiner (Westinghouse).

3.2 PERFORMANCE REFERENCES

None

3.3 DEFINITIONS

None

4.0 PREREQUISITES

A. Prerequisites will vary depending on which section of the procedure is being performed. Prerequisites for each section will be listed as Initial Conditions at the beginning of the applicable section.

5.0 PRECAUTIONS

A. Maximum power to a hydrogen recombiner is limited to 75 KW. 1002

6.0 PERFORMANCE

6.1 HYDROGEN RECOMBINER STARTUP (11, 12, 21, 22)

A. Initial Conditions

1. It is desired to place hydrogen recombiners in service for testing **OR** post accident conditions. 1002

B. Procedure

1. **ENSURE** the desired hydrogen recombiner heater control potentiometer is set at 000: 1002
   - 11 H_2 RECOMBINER, 1-HS-7501
   - 12 H_2 RECOMBINER, 1-HS-7506
   - 21 H_2 RECOMBINER, 2-HS-7501
   - 22 H_2 RECOMBINER, 2-HS-7506
2. **IF** starting the hydrogen recombiner due to an accident, **THEN PERFORM** the following:
   a. **OBTAIN** pre-accident Containment temperature from shift log readings.
   b. **OBTAIN** current Containment pressure reading.
   c. Using Figure 1, **DETERMINE** the required power (KW).
   d. **PLACE** the desired hydrogen recombiner(s) ON/OFF handswitch(es) in ON: 1002
      - 11 H_2 RECOMBINER, 1-HS-7502
      - 12 H_2 RECOMBINER, 1-HS-7507
      - 21 H_2 RECOMBINER, 2-HS-7502
      - 22 H_2 RECOMBINER, 2-HS-7507

6.1.B.2 Procedure (Continued)

CAUTION
Maximum power to a hydrogen recombiner is limited to 75 KW.

1002

e. **RAISE** the applicable hydrogen recombiner power to the level determined in Step 2.c, by adjusting its Heater Control Potentiometer: 1002

- 11 H_2 RECOMBINER, 1-HS-7501
- 12 H_2 RECOMBINER, 1-HS-7506
- 21 H_2 RECOMBINER, 2-HS-7501
- 22 H_2 RECOMBINER, 2-HS-7506

f. **MONITOR** the hydrogen recombiner(s) placed in service for proper operation by checking each applicable power meter (wattmeter) indicates the value determined in Step 2.c:

- 11 H_2 RECOMBINER, 1-XI-7501
- 12 H_2 RECOMBINER, 1-XI-7506
- 21 H_2 RECOMBINER, 2-XI-7501
- 22 H_2 RECOMBINER, 2-XI-7506

6.1.B Procedure (Continued)

3. **IF** starting the hydrogen recombiner for testing,
THEN PERFORM the following:

   a. **IF** containment access is established,
   THEN ENSURE precautions have been taken to ensure the area around the H_2 recombiner to be started is clear for approximately five feet and marked as a heat hazard.

   b. **PLACE** the desired hydrogen recombiner(s) ON/OFF handswitch(es) in ON: 1002

      - 11 H_2 RECOMBINER, 1-HS-7502
      - 12 H_2 RECOMBINER, 1-HS-7507
      - 21 H_2 RECOMBINER, 2-HS-7502
      - 22 H_2 RECOMBINER, 2-HS-7507

CAUTION
Maximum power to a hydrogen recombiner is limited to 75 KW. 1002

   c. **RAISE** the applicable hydrogen recombiner power to the desired level: 1002

      - 11 H_2 RECOMBINER, 1-HS-7501
      - 12 H_2 RECOMBINER, 1-HS-7506
      - 21 H_2 RECOMBINER, 2-HS-7501
      - 22 H_2 RECOMBINER, 2-HS-7506

   d. **MONITOR** the hydrogen recombiner(s) placed in service for proper operation by checking each applicable power meter (wattmeter) indicates the desired value:

      - 11 H_2 RECOMBINER, 1-XI-7501
      - 12 H_2 RECOMBINER, 1-XI-7506
      - 21 H_2 RECOMBINER, 2-XI-7501
      - 22 H_2 RECOMBINER, 2-XI-7506

****** END ******

6.2 HYDROGEN RECOMBINER SHUTDOWN (11, 12, 21, 22)

A. Initial Conditions

1. Hydrogen recombiner operation is no longer required.

B. Procedure

1. **REDUCE** the setpoint of each Heater Control Potentiometer (1C10,2C10) for each hydrogen recombiner to be secured to 000: 1002
   - 11 H_2 RECOMBINER, 1-HS-7501
   - 12 H_2 RECOMBINER, 1-HS-7506
   - 21 H_2 RECOMBINER, 2-HS-7501
   - 22 H_2 RECOMBINER, 2-HS-7506
2. **PLACE** the desired hydrogen recombiner(s) ON/OFF handswitch(es) in OFF: 1002
   - 11 H_2 RECOMBINER, 1-HS-7502
   - 12 H_2 RECOMBINER, 1-HS-7507
   - 21 H_2 RECOMBINER, 2-HS-7502
   - 22 H_2 RECOMBINER, 2-HS-7507

****** END ******

7.0 POST PERFORMANCE ACTIVITIES

None

8.0 BASES

None

9.0 RECORDS

A. Records generated by this procedure shall be transferred to Records Management **PER** PR-3-100, Records Management.

10.0 ATTACHMENTS

1. FIGURE 1, HYDROGEN RECOMBINER POWER CORRECTION FACTOR

HYDROGEN RECOMBINER POWER CORRECTION FACTOR

REQUIRED POWER (KW) VS CONTAINMENT PRESSURE

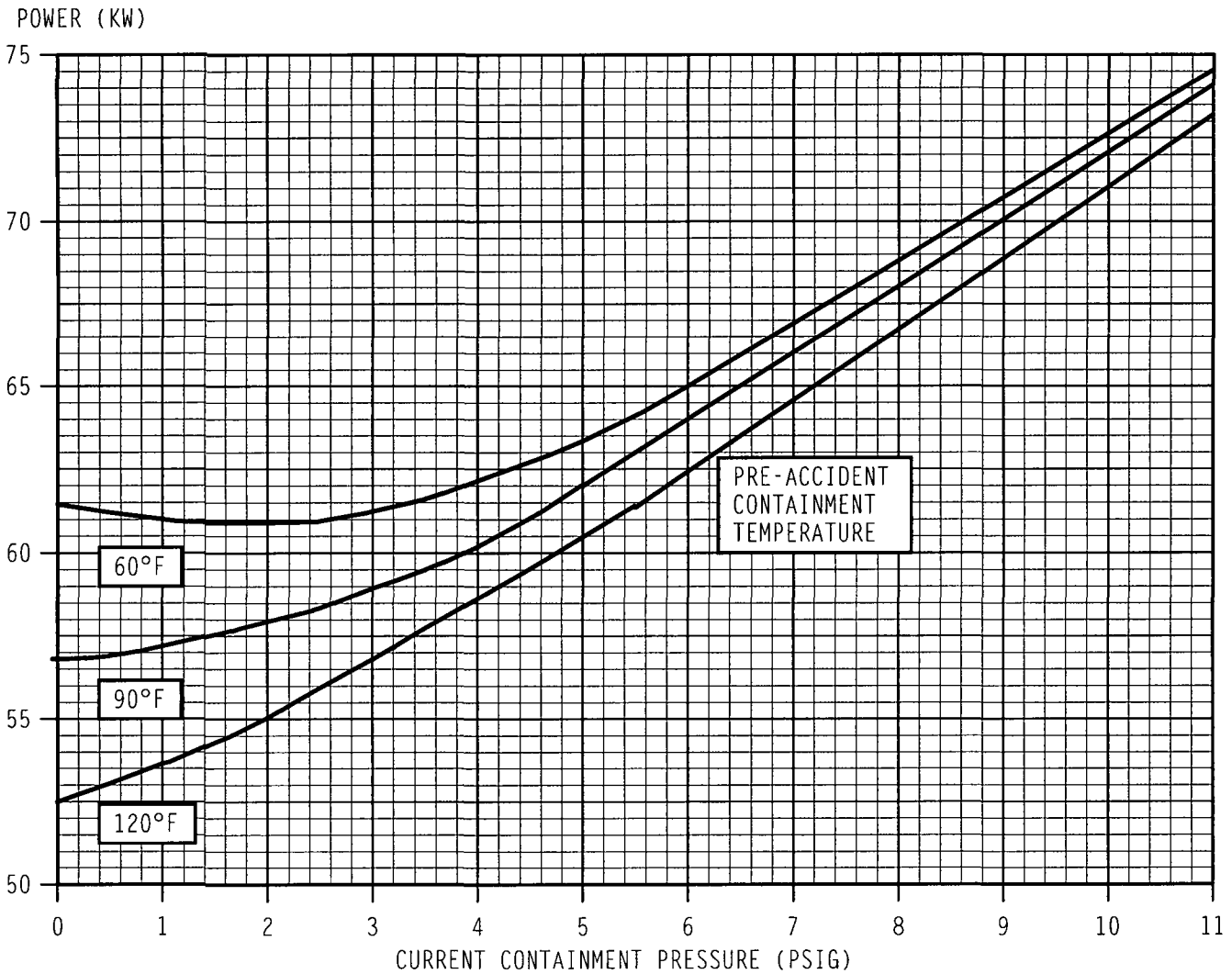

CALVERT CLIFFS NUCLEAR POWER PLANT

UNIT ONE AND TWO

OI-46

SEISMIC MEASUREMENT EQUIPMENT

REVISION 8

SAFETY RELATED

CONTINUOUS USE

Approval Authority: A. SHUMAKER

Effective Date: 06/17/1998

LIST OF EFFECTIVE PAGES

PAGES	REVISION
1-19	8

TABLES	REVISION
1, Pg 1	8

FIGURES	REVISION
1, Pg 1	8

PROCEDURE ALTERATIONS

PAGES	REVISION/CHANGE
4, 10, 15-18	08/00
4, 12, 16, 17, 19	08/01
12	08/02

TABLE OF CONTENTS

	TITLE	PAGE
1.0	PURPOSE	4
2.0	APPLICABILITY/SCOPE	4
3.0	REFERENCES AND DEFINITION	4
4.0	PREREQUISITES	5
5.0	PRECAUTIONS	5
6.0	PROCEDURES	6
6.1	LOADING A CASSETTE	6
6.2	RECORDING CALIBRATION DATA	7
6.3	NORMAL OPERATION	9
6.4	RETRIEVING EARTHQUAKE RECORDS	10
6.5	ANALYSIS OF SEISMIC RECORDINGS	16
7.0	POST PERFORMANCE ACTIVITIES	19
8.0	BASES	19
9.0	RECORDS	19
10.0	ATTACHMENTS	19

1.0 PURPOSE

A. The purpose of this procedure is to provide detailed operation of Seismic Measurement Equipment.

2.0 APPLICABILITY/SCOPE

A. This procedure covers the initial loading of cassettes and recording of the calibration.

B. This procedure covers the retrieval of earthquake records and the analysis of seismic events.

3.0 REFERENCES AND DEFINITION

3.1 DEVELOPMENTAL REFERENCES

A. 10 CFR 100, Code of Federal Regulations.

B. RM-1-101, Regulatory Reporting

C. PR-1-101, Preparation and Control of Calvert Cliffs Technical Procedures.

D. Emergency Response Plan Implementation Procedures (ERPIP).

E. Tech. Manual, 12778-015, FBA-3 Triaxial Force-Balance Accelerometer (Kinemetrics)

F. Technical Requirements Manual (TRM)

G. UFSAR

3.2 PERFORMANCE REFERENCES

A. 10 CFR 100, Code of Federal Regulations.

B. RM-1-101, Regulatory Reporting

C. OP-3, Normal Power Operation.

D. PR-3-100, Records Management.

E. Emergency Response Plan Implementation Procedures (ERPIP).

F. I-89, Seismic Instrumentation

G. Technical Requirements Manual (TRM)

3.3 DEFINITIONS

None

4.0 PREREQUISITES

A. Prerequisites will vary depending on which section of the procedure is being performed. Prerequisites for each section will be listed as Initial Conditions at the begining of the applicable section.

5.0 PRECAUTIONS

A. Do **NOT RECORD** calibration data **OR REMOVE** tape cassette **IF** the yellow EVENT ALARM is on.

6.0 PROCEDURES

6.1 LOADING A CASSETTE

A. Initial Conditions

1. Yellow EVENT ALARM is **NOT** lit.

B. Procedure

1. **ENSURE** tape to be loaded is blank.
   - **IF** in doubt,

     THEN have E&C **ERASE** the tape in a bulk eraser.
2. **ENSURE** cassette to be loaded is rewound. (all the tape on the left hand reel)
3. **RECORD** the following information on the cassette label:
   a. Recorder number.
   b. Device number (0-YE-001 to 0-YE-005).

> **NOTE**
> Once tape is inserted, proper loading of casette requires full spool of tape to be on the left hand side.

4. **LOAD** the cassette as follows:
   a. **PULL DOWN** the slide handle.
   b. **INSERT** the cassette.
   c. **RELEASE** slide handle slowly so as **NOT** to damage the transport or the tape.
5. **RECORD** Calibration Data by performing Section 6.2, RECORDING CALIBRATION DATA.

6.2 RECORDING CALIBRATION DATA

A. Initial Conditions

1. AC line cord from the Seismic Acceleration Recorder (0-YRC-001) panel is plugged into 120 Volt receptacle.

2. Cassettes are loaded into all recorders **PER** Section 6.1, LOADING A CASSETTE.

B. Procedure

1. **OBTAIN** key for the Seismic Acceleration Recorder (0-YRC-001) keyswitch.

2. **TURN** keyswitch to TEST for 15 seconds,
   THEN to OFF.

3. **VISUALLY VERIFY** that enough tape has been run so the leader is wound onto the take up reel.

   a. **IF** the tape stalls on the leader,
      THEN MOMENTARILY PULL DOWN the slide handle to free the tape.

> **NOTE**
> EVENT INDICATOR is black and the EVENT ALARM is yellow when the recorder is running.

4. **RECORD** the calibration data:

   a. **TURN** keyswitch to TEST for 10 seconds.

   b. **TURN** keyswitch to CALIBRATE for 2 seconds.

   c. **TURN** keyswitch to NATURAL FREQUENCY for 2 seconds.

   d. **TURN** keyswitch to CALIBRATE for 2 seconds.

   e. **TURN** keyswitch to TEST for 10 seconds.

6.2.B.4 Procedure (Continued)

NOTE
Recorder will continue to run in OFF for 10 seconds until time delay resets.

f. **TURN** keyswitch to OFF **AND WAIT** 15 seconds.

g. **TURN** keyswitch to OPERATE **AND REMOVE** the key.

5. **VERIFY** the AC ON indicator is ON.

6. **VERIFY** the EVENT ALARM is OFF.

7. **VERIFY** the EVENT INDICATOR is BLACK.

6.3 NORMAL OPERATION

A. Initial Conditions

1. AC line cords from the Seismic Acceleration Recorder (0-YRC-001) and Seismic Acceleration Playback Recorder (0-YR-001) are plugged into 120 Volt receptacle.

2. Cassettes, with calibration data recorded in Section 6.2, RECORDING CALIBRATION DATA, are loaded into all recorders.

3. Keyswitch is in **OPERATE.**

B. Procedure

NOTE

- A trigger package, sensing any ground motion, actuates the system to full operation in less than 0.1 seconds
- EVENT INDICATOR shows when an earthquake has been recorded (before an event, it is black; after an event, it is white).
- The EVENT INDICATOR will remain white following an event until reset, **AND** the system is still operable unless tapes are at the end of the reel.
- EVENT ALARM is illuminated only when an event is in progress and the tape transports are running.
- The system continues to operate for as long as the trigger detects the earthquake, plus an additional 10 seconds.
- System Engineer is contacted so that he can arrange for E&C to perform calibration **AND AID** in obtaining and analysis of strip charts.

1. **IF** the EVENT INDICATOR is white (the monitor has actuated), **THEN PERFORM** the following:

   - **CONTACT** the System Engineer
   - **PERFORM** Section 6.4, RETRIEVING EARTHQUAKE RECORDS

6.4 RETRIEVING EARTHQUAKE RECORDS

A. Initial Conditions

1. EVENT INDICATOR is white, indicating the seismic monitor has actuated.

2. EVENT ALARM light is off.

B. Procedure

1. **VERIFY** seismic activity:

   a. **IF** the effects of the earthquake were felt by on-site personnel (See Table 1), **THEN EVALUATE** implementation of the Emergency Response Plan Implementation Procedures (ERPIP).

   b. **CALL** one of the following earthquake centers to get information on the extent of the earthquake:

      - The National Earthquake Information Center at (303) 273-8500
      - The University of Delaware at (302) 831-1576

> **NOTE**
> System Engineer is contacted so that he can arrange for E&C to perform calibration **AND AID** in obtaining and analysis of strip charts.

2. **CONTACT** the System Engineer.

3. **ENSURE** EVENT ALARM light is off.

4. **RECORD** in the CRO log that the Seismic Monitor is out of service to retrieve Seismic Data.

6.4.B Procedure (Continued)

NOTE

- EVENT INDICATOR is black **AND** the EVENT ALARM is yellow when the recorder is running.
- PERFORMING step B.5 will remove the Seimic Monitor from service.

5. **RECORD** the calibration data:
   a. **TURN** keyswitch to TEST for 10 seconds.
   b. **TURN** keyswitch to CALIBRATE for 2 seconds.
   c. **TURN** keyswitch to NATURAL FREQUENCY for 2 seconds.
   d. **TURN** keyswitch to CALIBRATE for 2 seconds.
   e. **TURN** keyswitch to TEST for 10 seconds.

NOTE

Recorder will continue to run in OFF for 10 seconds until time delay resets.

   f. **TURN** keyswitch to OFF **AND WAIT** 15 seconds.
   g. **TURN** keyswitch to OPERATE **AND REMOVE** the key.
6. **VERIFY** the AC ON indicator is ON.
7. **VERIFY** the EVENT ALARM is OFF.
8. **VERIFY** the EVENT INDICATOR is BLACK.
9. **REMOVE** each cassette.
10. **LABEL** each cassette with the following:
    - DATE
    - TIME

6.4.B Procedure (Continued)

NOTE

- New cassettes should be installed as soon as possible to allow restoration of the Seismic Monitor to service.
- Cassette can be obtained from E&C.
- At the completion of Step 12, the Seismic Monitoring Instruments will be restored to service.

11. **ENSURE** Seismic Monitor is returned to service within 24 hours.

12. **INSTALL** new cassettes **PER** Section 6.1, LOADING A CASSETTE, **AND RECORD** calibration data **PER** Section 6.2, RECORDING CALIBRATION DATA.

13. **RECORD,** in the CRO log, the time that the Seismic Monitoring Instruments are returned to service.

NOTE

E&C performs operations on the Seismic Measurement Equipment on a routine basis and should be used to transfer seismic activity information from the tapes to a strip chart for analysis **PER** I-89, Seismic Instrumentation.

14. **IF** the tapes need to be transferred to a strip chart
THEN CONTACT E&C to transfer seismic information on the tapes to a strip chart.

6.4.B Procedure (Continued)

15. **IF** E&C can **NOT** be contacted to transfer seismic information on the tapes **AND** immediate analysis is required
THEN PERFORM the following:

    a. **START** the magnetic tape playback system:

        (1) **IF** AC power is available,
        THEN:

            (a) **VERIFY** the Seismic Acceleration Playback Recorder (0-YR-001) AC power cord is plugged into the AC outlet.

            (b) **TURN** the power select switch to AC RUN position **AND VERIFY** AC RUN light ON.

        (2) **IF** AC power is unavailable,
        THEN PLACE the Power Select switch to BATTERY RUN.

    b. ON the Playback Unit:

        (1) **PULL DOWN** the tape transport slide **AND INSERT** the cassette to be played, LABEL side up.

        (2) **TURN** the channel select switch to Channel 1 (Longitudinal Accelerometer).

        (3) **TURN** the transport on/off switch to ON **AND ENSURE** that the tape runs smoothly.

        (4) **REWIND** the tape by pulling the slide handle down and to the left.

        (5) **TURN** the transport on/off switch to OFF.

        (6) **TURN** the stylus drive on/off switch to ON.

> **NOTE**
> A Chart Drive speed of 25 mm/sec is considered to be the optimal speed to overcome stylus friction. Other speeds may be substituted if desired.

        (7) **SET** Chart Drive Switch to 25 mm/sec.

        (8) **TURN** the stylus drive run/cal/zero switch to ZERO **AND USE** the position control to center the stylus.

6.4.B.15.b **Procedure (Continued)**

NOTE

- The Gain Factor Switch settings are 1, 2, 4 and 10. These settings correspond to 1g, .5g, .25g and .1g full scale readings, respectively. Full scale means from the center of the chart paper to the edge.
- A Gain Factor Switch setting of 10 gives maximum clarity. For large peak magnitudes, the Gain Factor Switch should be set at the 1 position.

(9) **TURN** the Gain Factor Switch to a desired position.

(10) **MARK** the gain setting on the strip chart for future analysis.

(11) **TURN** the stylus drive run/cal/zero switch to RUN.

(12) **TURN** the transport on/off switch to ON.

NOTE

The playback system should now be playing back a recorded signal and displaying the earthquake. The earthquake signal will be immediately preceded and followed by a calibration record. Therefore, the actual event will appear between the calibrations. A timing marker will be marking 1/2 sec. interval marks on the chart. Typical Calibration records for Force Balance and Electromagnetic Accelerometers are shown in Figure (1).

c. **IF** any peaks go off-scale during playback,
THEN:

- **CHANGE** the Gain Factor Switch setting until all peaks are completely illustrated on the strip chart.
- **PLACE** a vertical mark **AND WRITE** the new Gain Factor Switch setting on the Strip Chart.

d. **WHEN** the earthquake has been recorded on the chart, as evidenced by the timing interval marks being automatically discontinued **AND** the calibration data recorded on the chart,
THEN:

- **TURN** the transport switch to OFF.
- **TURN** the stylus drive switch to OFF.

e. **PLACE** a mark on the chart indicating which cassette and channel is recorded.

f. **TURN** the channel selector switch to Channel 2 (Transverse Accelerometer),
REPEAT Steps 15.a through 15.e,
THEN PROCEED to Step 15.g.

6.4.B.15 **Procedure (Continued)**

g. **TURN** the channel selector switch to Channel 3 (Vertical Accelerometer),
REPEAT Steps 15.a through 15.e,
THEN PROCEED to Step 15.h.

h. **REMOVE** the cassette from the transport.

i. **REPEAT** steps 15.a through 15.h for each of the other four cassettes.

j. **ANALYZE** all recordings **PER** Section 6.5, ANALYSIS OF SEISMIC RECORDINGS **AND CONTACT** the Responsible Engineer for assistance in analyzing.

k. **IF** AC power is available,
THEN PLACE the Power Selector switch to Battery Charge.

6.5 ANALYSIS OF SEISMIC RECORDINGS

A. Initial Conditions

Seismic Recordings have been retrieved **PER** Section 6.4, RETRIEVING EARTHQUAKE RECORDS.

B. Procedure

NOTE
The System Engineer should be present to help with complete analysis of event.

1. **USING** the Gain Factor Switch setting, **DETERMINE** the peak acceleration values recorded on the strip chart.

NOTE

- The Gain Factor Switch settings are 1, 2, 4 and 10. These settings correspond to 1g, .5g, .25g and .1g full scale readings, respectively. Full scale means from the center of the chart paper to the edge.
- A .1g spike is recorded on all channels when recording commences.
- **IF** the chart recordings show only a spike, **THEN** a valid seismic event probably has **NOT** occurred **AND** the Emergency Response Plan Implementation Procedures (ERPIP) should **NOT** be implemented.
- **IF** the chart recordings are similar to the Simulated Earthquake Record of Figure (1), **THEN** a seismic event may have occurred.

2. **IF** peak acceleration values are greater than 0.15g Horizontal **OR** 0.10g Vertical (Design Basis Earthquake), **THEN**:
   - **COMMENCE** a controlled shutdown **PER** OP-3, **AND PLACE** both Units in Mode 5, as expeditiously as possible.
   - **EVALUATE** implementation of the Emergency Response Plan Implementation Procedures (ERPIP).
   - **DETERMINE** reportability requirements **PER** RM-1-101.
   - **COMPLY** with Tech Spec 5.5.9.

6.5.B Procedure (Continued)

3. IF peak acceleration values are within the following ranges:

   - GREATER than 0.08g Horizontal **OR** 0.053g Vertical (Operating Basis Earthquake)

   - LESS THAN 0.15g Horizontal **OR** 0.10g Vertical (Design Basis Earthquake), **THEN**:

     a. **EVALUATE** implementation of the Emergency Response Plan Implementation Procedures (ERPIP).

     b. **DETERMINE** reportability requirements **PER** RM-1-101.

     c. **COMPLY** with Tech Spec 5.5.9.

     d. **COMMENCE** a controlled shutdown **PER** OP-3.

     e. **WALK DOWN** all the following SAFETY-RELATED BREAKERS:

        - 4KV BREAKERS
        - 480V LOAD CENTERS
        - 480V MCCs

     f. **LIST** any BREAKERS that are not in the connected position.

     g. **FOR** all the SAFETY-RELATED BREAKERS that are **NOT** in the connected position have E&C:

        (1) **INSPECT** for loose hardware and deformation of drawout element and cell.

        (2) **RACK** the BREAKER into the TEST position **AND VERIFY** several successful close-open operations.

NOTE

The licensee is required to demonstrate to the NRC that NO functional damage has occurred to those features necessary for continued operation without undue risk to the health and safety of the public, **PER** 10 CFR 100.

4. **ENSURE** prior to resuming operation, NO functional damage has occurred to those features necessary for continued operation without undue risk to the health and safety of the public, **PER** 10 CFR 100.

6.5.B Procedure (Continued)

5. **IF** peak acceleration values are less than 0.08g Horizontal **OR** 0.053g Vertical (Operating Basis Earthquake),
   AND the effects of the earthquake have been felt by on-site personnel,
   THEN PERFORM the following:

   - **DETERMINE** reportability requirements **PER** RM-1-101.
   - **EVALUATE** implementation of the Emergency Response Plan Implementation Procedures (ERPIP), if not already implemented.
   - **PERFORM** a walkdown of equipment spaces to verify NO damage has occurred.

6. **SUBMIT** Seismic Monitor Recordings (tapes and strip charts) to the System Engineer for complete analysis.

7. **VERIFY** E&C completes calibration of Seismic Monitor within five days. **[B0037]**

7.0 POST PERFORMANCE ACTIVITIES

NONE

8.0 BASES

None

9.0 RECORDS

A. Records generated by this procedure shall be transferred to Records Management **PER** PR-3-100, Records Management.

10.0 ATTACHMENTS

A. TABLE (1), MODIFIED MERCALLI INTENSITY SCALE

B. FIGURE (1), SIMULATED EARTHQUAKE RECORD

MODIFIED MERCALLI INTENSITY SCALE

TABLE (1)

Modified Mercalli Intensity Scale

		Magnitude (Richter Scale	Ground Acceleration In g's	
1.	Not felt except by a very few under especially favorable circumstances.			
2.	Felt only by a few persons at rest, especially on upper floors of buildings. Delicately suspended objects may swing.	3		
3.	Felt quite noticeably indoors, especially on upper floors of building, but many people do not recognize it as an earthquake. Standing motor cars may rock slightly. Vibration like passing of truck. Duration estimated.		.005	
4.	During the day felt indoors by many, outdoors by few. At night some awakened. Dishes, windows, doors disturbed; walls make creaking sound. Sensation like heavy truck striking building. Standing motor cars rocked noticeably.	4	.01	
5.	Felt by nearly everyone; many awakened. Some dishes, windows, etc., broken; a few instances of cracked plaster; unstable objects overturned. Disturbance of trees, poles and other tall objects sometimes noticed. Pendulum clocks may stop.		.02 g's	
6.	Felt by all; many frightened and run outdoors. Some heavy furniture moved; a few instances of fallen plaster or damaged chimneys. Damage slight.	5	.05 .053	 OBE
7.	Everybody runs outdoors. Damage negligible in buildings of good design and construction; slight to moderate in well-built ordinary structures; considerable in poorly built or badly designed structures; some chimneys broken. Noticed by persons driving motor cars.	6	.1	DBE
8.	Damage slight in specially designed structures; considerable in ordinary substantial buildings with partial collapse; great in poorly built structures. Panel walls thrown out of frame structures. Fall of chimneys, factory stacks, columns, monuments, walls. Heavy furniture overturned. Sand and mud ejected in small amounts. Changes in well water. Persons driving motor cars disturbed.		0.2 g's	
9.	Damage considerable in specially designed structures; well designed frame structures thrown out of plumb; great in substantial buildings, with partial collapse. Buildings shifted off foundations. Ground cracked conspicuously. Underground pipes broken.	7	.5	
10.	Some well-built wooden structures destroyed; most masonry and frame structures destroyed with foundations, ground badly cracked. Rails bent. Landslides considerable from river banks and steep slopes. Shifted sand and mud. Water splashed (slopped) over banks.	8	1 2 g's	

The modified Mercalli intensity scale is a measure of earthquake intensity in ten increasing gradients, compared to the standard Richter scale. Acceleration values established were by the Atomic Energy Commission.

SIMULATED EARTHQUAKE RECORD

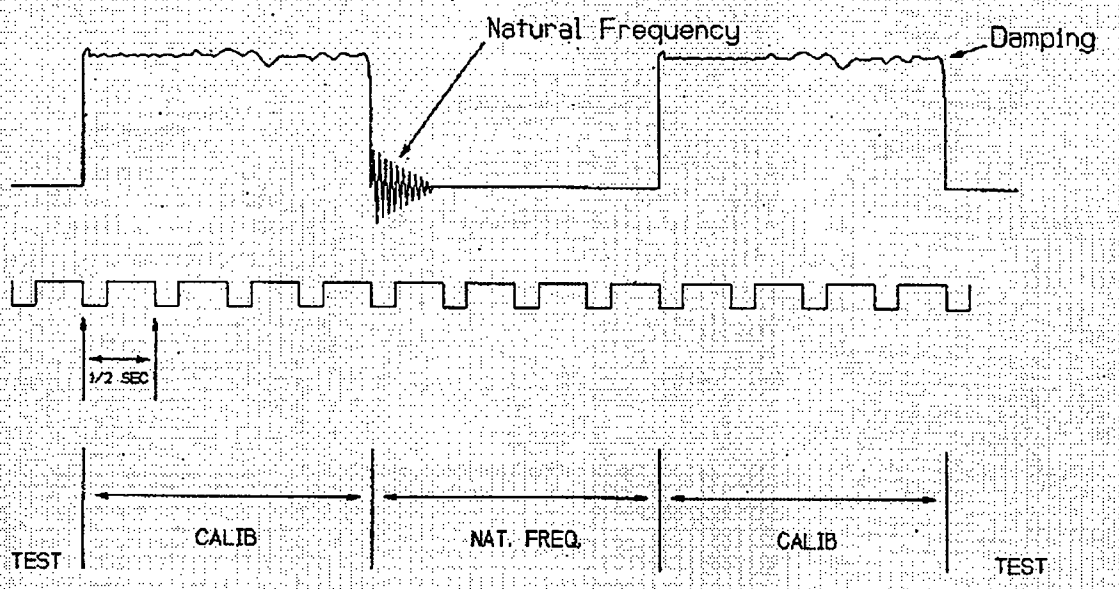

TYPICAL TEST RECORD - FORCED BALANCE ACCELEROMETER (FBA)

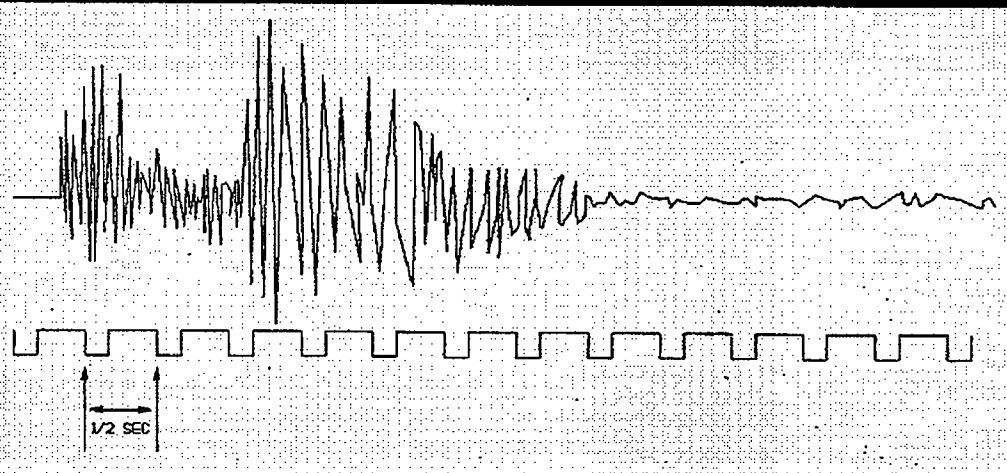

SIMULATED EARTHQUAKE RECORD

CALVERT CLIFFS NUCLEAR POWER PLANT

UNIT ONE AND TWO

OI-50A

PLANT COMPUTER

REVISION 7

NON-SAFETY RELATED

MULTIPLE USE

Approval Authority: Kent Mills

Effective Date: 6/18/2010

TABLE OF CONTENTS

	TITLE	PAGE
1.0	PURPOSE	5
2.0	APPLICABILITY/SCOPE	5
3.0	REFERENCES AND DEFINITIONS	5
4.0	PREREQUISITES	6
5.0	PRECAUTIONS	6
6.0	SYSTEM OPERATION	7
6.1	OPERATOR INTERFACE [INFORMATION USE]	7
6.2	ALARM DISPLAY [INFORMATION USE]	9
6.3	POINT DISPLAY [INFORMATION USE]	10
6.4	TRENDING [INFORMATION USE]	11
6.5	CEA FUNCTIONS [INFORMATION USE]	19
6.6	COOLING WATER MONITOR [INFORMATION USE]	21
6.7	CORE PHYSICS [INFORMATION USE]	23
6.8	SYSTEM DIAGRAM [INFORMATION USE]	28
6.9	DEVICE CONTROL [INFORMATION USE]	30
6.10	ALARM PROCESSING [INFORMATION USE]	35
6.11	POINT PROCESSING [INFORMATION USE]	39
6.12	GROUP FUNCTION [INFORMATION USE]	47
6.13	OUTPUT REPORTS AND SUMMARIES [INFORMATION USE]	50
6.14	DEMAND PERFORMANCE CALCULATIONS AND REPORTS [INFORMATION USE]	53
6.15	EQUIPMENT SERVICE LOG [INFORMATION USE]	65
6.16	SIGN ON/OFF [INFORMATION USE]	67
6.17	GOULD SEL-9750 BOOT-STRAP PROCEDURE [CONTINUOUS USE] [B0154]	68

TABLE OF CONTENTS

TITLE		PAGE
6.18	VIEWING THE 1/M PROGRAM [INFORMATION USE]	73
6.19	SELECTED COMPUTER POINT ANNUNCIATOR [INFORMATION USE]	75
6.20	MODIFYING FEEDWATER CORRECTION FACTORS [REFERENCE USE]	77
6.21	SHIFT INPUTS TO THERMAL POWER CALORIMETRICS [REFERENCE USE]	82
	A. Precautions	82
	B. Performance	82
7.0	POST-PERFORMANCE ACTIVITIES	85
8.0	BASES	85
9.0	RECORDS	85
10.0	ATTACHMENTS	85

LIST OF EFFECTIVE PAGES

PAGES	REVISION
1-85	7

ATTACHMENTS	REVISION
Table 1, PG 1	7
Table 2, PG 1	7
Table 3, PG 1	7
Table 4, PGs 1-3	7
Att 1, PG 1-2	7
Att 2, PG 1	7
Att 3, PG 1	7
Att 4, PG 1-2	7

PROCEDURE ALTERATIONS

PAGES	REVISION/CHANGE
77-81	00701

1.0 PURPOSE

A. This procedure directs operation of the plant computer.

2.0 APPLICABILITY/SCOPE

A. This procedure describes only applications available to Operations personnel when signed on at the operator level using a password.

3.0 REFERENCES AND DEFINITIONS

3.1 DEVELOPMENTAL REFERENCES

A. Technical Procedure Writers Manual

B. PR-1-101, Preparation and Control of Calvert Cliffs Technical Procedures

3.2 PERFORMANCE REFERENCES

A. EN-1-100, Engineering Service Process Overview

B. CNG-OP-1.01-2003, Alarm Response and Control.

C. NEOP-301, Operator Surveillance Procedure.

3.3 DEFINITIONS

NOTE

Angle brackets, <>, signify keyboard names when used with the action verb DEPRESS, and signify specific symbols to be typed when used with the action verb TYPE. Type only those symbols enclosed by the angle brackets and **NOT** the angle brackets themselves.

A. Select:

- Position the cursor next to the desired application on the menu and depress <XMIT>

OR

- Type in the function number corresponding to the desired application on the menu into the prompt field, and depress <XMIT>.

B. Enter:

- Position the cursor on the reverse video field, type in the necessary information and depress <XMIT> key. In cases where multiple entries are to be made on one page, the <XMIT> key does not have to be depressed until the last entry has been completed on that page.

C. Active:

- The point is selected and is of Good Quality.

4.0 PREREQUISITES

None

5.0 PRECAUTIONS

A. Before the start of a new fuel cycle the CECOR/Better Axial Shape Selection System (BASSS) must have new coefficients entered by Nuclear Fuel Management personnel in order to yield correct values.

6.0 SYSTEM OPERATION

6.1 OPERATOR INTERFACE [INFORMATION USE]

A. General Information

1. Functional security is provided by the four levels of access to the system. Passwords control the functional access to the system.

2. Some operational functions are available only through the menu hierarchy, some are available only through the use of a function key, and some are available both ways.

B. Point Tags are used to show the quality status of all displayed values except where noted. The following definitions describe these indicator tags:

- blank - Good (In scan and considered reliable)
- B - Bad
- D - Deleted from processing
- E - Manually entered
- U - Unreliable
- F - Failed

CAUTION

If both printers in any of the following sets fail/go offline it will cause a loss of the Plant Computer when data buffers are full. Failed Printers must be restored as soon as possible.

C. Peripheral device failover applies to the following line printers only:

- Alarm printer fails to the Utility printer
- Utility printer fails to the Alarm printer
- Incore printer fails to the 72' Computer Room printer
- 72' Computer Room printer fails to the Incore printer

6.1 OPERATOR INTERFACE [INFORMATION USE] (Continued)

D. Automatic Report Printing

1. Event Automatic Report Printing

   - Automatic report execution is activated under certain conditions (trips, SOE, etc.). Once activated, these reports may require a considerable length of time to complete. The operator should avoid canceling reports that have been automatically activated. Also, when selecting a display device from a device selection menu, the operator should observe the current activity of the device before selecting.

2. Timed Automatic Report Printing

   - Automatic report execution by time is set for activation via the PERIODIC PROCESSOR Function and includes shift reports, hourly and daily reports, etc.

****** END ******

6.2 ALARM DISPLAY [INFORMATION USE]

NOTE

The alarm display application provides the operator with the ability to view points currently in an alarm state. The alarms are ordered either chronologically or by alarm message priority. When displayed chronologically, the points are ordered with the most current alarms at the top of the display. When ordered by priority, the higher priority alarms appear at the top of the display. Within each priority level, the alarms are ordered chronologically.

A. **DISPLAY** alarms in chronological order as follows:

1. **SELECT** the ALARM DISPLAY function from the MAIN MENU.
2. **SELECT** the CHRONOLOGICAL ALARM DISPLAY option.
3. **DEPRESS** <PAGE FWD> and <PAGE BACK> to see other alarm display pages on the CRT.

B. **DISPLAY** alarms by priority as follows:

1. **SELECT** the ALARM DISPLAY function from the MAIN MENU.
2. **SELECT** the PRIORITY ALARM DISPLAY option.

NOTE

The PRIORITY ALARM DISPLAY is initiated on the CRT. The alarms are displayed based on priority level, and within a given priority level the alarms are shown chronologically.

3. **DEPRESS** <PAGE FWD> and <PAGE BACK> to see other alarm display pages on the CRT.

****** END ******

6.3 POINT DISPLAY [INFORMATION USE]

NOTE

This function displays dynamic and static point information (real-time and Point Editor changes) for a point and cannot be used to modify any of the point's displayed fields. Dynamic point information is updated at five second intervals and consists of the point's engineering units value or state, as well as the alarm state. The static point information consists of the point ID, description, and engineering units name.

A. **SELECT** the POINT DISPLAY function from the MAIN MENU, **OR DEPRESS** <POINT DISPLAY>.

B. **ENTER** the point ID.

****** END ******

6.4 TRENDING [INFORMATION USE]

NOTE

This function allows the operator to assign a data base point to a strip chart recorder. Up to 8 data base points can be assigned in this fashion. When a point is assigned to a recorder, output of that point's value begins immediately and continues until the operator removes the point assignment to the recorder with this function.

A. Pen Recorder Trending

1. **MAKE** initial pen assignments as follows:

   a. **SELECT** the TRENDING function from the MAIN MENU.

   b. **SELECT** the PEN RECORDING function.

NOTE

IF the minimum and maximum chart values are not entered,
THEN the default values will be used from the Point ID minimum and maximum chart values.

   c. **TYPE** up to 8 point IDs into the recorder slots.

   d. **TYPE** the minimum and maximum chart values as necessary.

   e. **IF NOT** satisfied with these points,
      THEN SELECT the REJECT option.

   f. **IF** satisfied with these points,
      THEN SELECT the ACCEPT option.

NOTE

The trend pens on the recorder are skewed to indicate a new assignment has been made for each pen. Output is sent to the recorder on a one second cycle. The TRENDING MENU is displayed. Messages for the pen assignments are printed on the Alarm printer.

2. **CHANGE** pen assignments as follows:

   a. **SELECT** the TRENDING function from the MAIN MENU.

   b. **SELECT** the PEN RECORDING function.

   c. **ENTER** a new point ID over an existing point ID.

   d. **SELECT** the ACCEPT option.

6.4.A Pen Recorder Trending (Continued)

NOTE
The TREND PEN is skewed to indicate the change.

3. **CANCEL** all pen assignments as follows:

   a. **SELECT** the TRENDING function from the MAIN MENU.

   b. **SELECT** the PEN RECORDING function.

   c. **ENTER** blanks over the existing point IDs.

   d. **SELECT** the ACCEPT function.

****** END ******

B. 1(2)C05 Power Indication, XI-5515

1. **MODIFY** Power Indication with CRS concurrence as follows:

   a. **SELECT** the TRENDING function from the MAIN MENU.

   b. **SELECT** the LED XI-5515 POINT ASSIGNMENT function.

   c. **ENTER** one of the listed power points:

      - NR5A (Avg of subchannels of CH A NI Pwr)
      - NR6B" (Avg of subchannels of CH B NI Pwr)
      - NR7C" (Avg of subchannels of CH C NI Pwr)
      - NR8D" (Avg of subchannels of CH D NI Pwr)

6.4.B.1 1(2)C05 Power Indication, XI-5515 (Continued)

NOTE
Delta T Power should be used at lower power ranges (5% - 30%) due to the decalibration of the NI's.

- XVDTRR" (Rx Reg Sys Delta T Pwr)
- XVDTA" (RPS CH A Delta T Pwr)

For low power operation:

- NR1A! (Wide Range NI Pwr)
- NR2B! (Wide Range NI Pwr)
- NR3C! (Wide Range NI Pwr)
- NR4D! (Wide Range NI Pwr)

NOTE
- Values out of range (outside of 0-3276.7 range) **OR** with bad quality will be displayed as blank.
- The GAIN will default to "1" AND the BIAS will default to "0" if no value is entered by the operator. The BIAS should be left at "0". The gain value should be adjusted if the indicated power is deviating 1% from actual power (PA912-in percent power).

d. **IF** power deviation is greater than 1%,
THEN ENTER the GAIN value.

(1) Divide the actual power (PA912-in percent pwr) by the indicated (XI-5515) power. This value should be entered as the gain setting.

e. **UPDATE** magnetic label on 1(2)C05.

****** END ******

6.4 TRENDING [INFORMATION USE] (Continued)

C. Alphanumeric Trending

1. **MODIFY** Trend Block parameters as follows:

> **NOTE**
> This function allows the operator to modify the trend block parameters and the group point assignments. Trending provides alphanumeric trend data for up to 40 trend blocks. This trend data can be directed to any printer. Multiple trend blocks may be directed to multiple printers concurrently. Any defined group point may be established as a trend block. The Trend Block Maintenance display allows the operator to define the group point to be trended, the trend frequency, the trend start time, and the printer number. The Trend Block Menu is automatically maintained. Once the assignments are made, trending is performed for each trend block as specified. Output is printed for each frequency in Trend Block sequence. Termination of any active Trend Block is accomplished by changing the printer number to 0 (zero).

a. **SELECT** the TRENDING function from the MAIN MENU.

b. **SELECT** the TREND BLOCK MAINTENANCE function.

c. **SELECT** the TREND BLOCK MAINTENANCE function from the TRENDING TASK OPTION MENU.

d. **DEPRESS** <PAGE FWD> or <PAGE BACK> until the desired page of the TREND BLOCK MAINTENANCE MENU is displayed.

> **NOTE**
> Start times must be later than current time when MAINTENANCE COMPLETED is selected, unless it is desired that trending start at that time tomorrow.

e. **ENTER** the following data into the trend block:

- group numbers
- frequencies
- start times
- printer numbers

f. **DEPRESS** <XMIT> to enter data.

g. **TAB** to the MAINTENANCE COMPLETED field.

h. **DEPRESS** <XMIT>.

6.4.C Alphanumeric Trending (Continued)

2. **TERMINATE** trending to the printer as follows:

   a. **SELECT** TRENDING function from MAIN MENU.

   b. **SELECT** the TREND BLOCK function from the TRENDING MENU.

   c. **SELECT** the TREND BLOCK MAINTENANCE function from the TRENDING TASK OPTION MENU.

   d. **ENTER** <0> (zero) for printer number for any active trend blocks to make them inactive.

   e. **DEPRESS** <XMIT>.

   f. **TAB** to the MAINTENANCE COMPLETED field.

   g. **DEPRESS** <XMIT>.

3. **COMMENCE** sending Trend Block to the CRT as follows:

> **NOTE**
> This function enables the operator to initiate trending for any trend block to the CRT.

   a. **SELECT** the TRENDING function from the MAIN MENU.

   b. **SELECT** the TREND BLOCK function from the TRENDING MENU.

   c. **SELECT** the TREND BLOCK TO CRT function from the TRENDING TASK OPTION MENU.

   d. **SELECT** a non-blank trend block from the TREND BLOCK MENU.

> **NOTE**
> The ALPHANUMERIC TRENDING function is initiated on the CRT. When the screen is full, the top line of data is discarded, the other lines on the screen are scrolled up one line, and the line of data is added at the bottom of the screen.

   e. **DEPRESS** <ABORT> twice **OR DEPRESS** <MAIN MENU> once to return to the Main Menu.

****** END ******

6.4 TRENDING [INFORMATION USE] (Continued)

D. Continuous Video Trending

NOTE
This function has two parts. The first part is the assignment function. The second part is the actual trending function.

1. **MAKE** Continuous Video Trend Assignments as follows:

NOTE
The operator can specify up to 40 points to have data collected for possible continuous trending. The data for continuous video trending is logged to a dedicated periodic file. Point assignments cause logging for the specified points to commence at the time of assignment. The data is collected on a one second cycle, with up to 12 hours of data available per point.

a. **SELECT** the TRENDING function from the MAIN MENU.

b. **SELECT** the CONTINUOUS VIDEO TREND ASSIGNMENT option from the TRENDING MENU.

c. **DEPRESS** <PAGE FWD> or <PAGE BACK> until the desired page is displayed.

NOTE
When entering point IDs, the minimum and maximum charting limits may also be entered. If the charting limits are **NOT** specified, they are retrieved from the real-time data base.

d. **ENTER** point IDs and min and max chart values.

e. **DEPRESS** <XMIT> after all data is entered.

f. **IF NOT** satisfied with the point selections or charting limits, **THEN SELECT** the REJECT option.

   (1) **MODIFY** the point selections and/or the charting limits.

   (2) **DEPRESS** <XMIT>.

g. **IF** satisfied with the point IDs and charting limits, **THEN SELECT** the ACCEPT option.

6.4.D.1 Continuous Video Trending (Continued)

NOTE
The Video Trend Historical file is updated with the new points, and logging for the new points commences. The second page of the CONTINUOUS VIDEO TREND RECORDING screen is displayed

h. **REPEAT** the steps listed above for the second page.

2. **ACTIVATE** Continuous Video Trending as follows:

NOTE
The operator selects this option to view the data collected for all currently assigned points. A maximum of 12 hours of data is available per point. When initiated, the most recent data is displayed, and the display is updated with the current real-time data. If a display of older data is brought up by the operator through use of the function keys, the display is static until another action by the operator. A maximum of four video trends are displayable on a CRT at any one time.

a. **SELECT** the TRENDING function from the MAIN MENU.

b. **SELECT** the CONTINUOUS VIDEO TREND ACTIVATION option.

c. **DEPRESS** <PAGE LEFT> to view historical data.

d. **DEPRESS** <PAGE RIGHT> to view more current data until the current time is displayed.

e. **DEPRESS** <PAGE FWD> **OR** <PAGE BACK> to view data for the other points assigned to the Continuous Video Trend.

f. **DEPRESS** <ABORT> twice **OR DEPRESS** <MAIN MENU> once to return to the Main Menu.

****** END ******

E. Real Time Video Trending

NOTE
Real-time Video Trending gives a graphic representation of up to four points at one time on the CRT. The operator can specify either a group point as the source for the point IDs of the points to be trended, or up to four points and the charting values for those points. Additionally, the trend frequency is specified by the operator. The data source is the Real-time data base. After the operator specifies the parameters which control the trending, trending is initiated.

1. **SELECT** the TRENDING function from the MAIN MENU.

6.4.E Real Time Video Trending (Continued)

2. **SELECT** the REALTIME VIDEO TRENDING option from the TRENDING MENU.

> **NOTE**
> The minimum and maximum chart limits may also be entered. If the charting limits are **NOT** specified, they are retrieved from the Real-time data base.

3. **SPECIFY** individual points to be trended:
   - **ENTER** an update frequency
   - **LEAVE** the group number blank **AND ENTER** up to four point IDs
4. **DEPRESS** <XMIT>.
5. **IF NOT** satisfied with the point selections or charting limits, **THEN SELECT** the REJECT option:
   a. **MODIFY** the point IDs or the charting limits.
   b. **DEPRESS** <XMIT>.
6. **IF** satisfied with the point IDs and charting limits, **THEN SELECT** the ACCEPT option.

> **NOTE**
> Accepting the verification screen causes the minimum and maximum charting limit fields to be updated in the Real-time data base. Video trending is initiated. The display contains trend tracks for a maximum of four different points. The entered points appear on the tracks to which they were assigned. The point ID, minimum and maximum charting values, and current point value are shown on the right hand side of the display. Current data is entered on the right of the screen and scrolls to the left. Time hacks are output every thirtieth update. The screen is updated at the trend frequency selected by the operator.

7. **DEPRESS** <ABORT> twice **OR DEPRESS** <MAIN MENU> once to return to the Main Menu.

****** END ******

6.5 CEA FUNCTIONS [INFORMATION USE]

A. CEA Log

NOTE
This function provides a printout of the CEA Position Log on the Incore printer.

1. **SELECT** the CEA FUNCTIONS function from the MAIN MENU.
2. **SELECT** the CEA LOGALL CEAS from the CEA FUNCTIONS MENU.

B. CEA Insertion Accounting

NOTE
The Control Element Assembly (CEA) Insertion Accounting Report calculates the times that the CEAs were inserted beyond the LTSS Insertion Limit when operating greater than or equal to 20% power.

1. **PRINT** the CEA Insertion Accounting Report as follows:
   a. **SELECT** CEA FUNCTIONS from the Main Menu.
   b. **SELECT** the CEA INSERTION ACCOUNTING option from the CEA FUNCTIONS MENU.
   c. **SELECT** the PRINT ACCOUNTING REPORT option from the CEA INSERTION ACCOUNTING MENU.
   d. **SELECT** a printer.
2. **PRINT** the CEA Insertion Subsystem Status Report as follows:
   a. **SELECT** CEA FUNCTIONS from the Main Menu.
   b. **SELECT** the CEA INSERTION ACCOUNTING option from the CEA FUNCTIONS MENU.
   c. **SELECT** the SUBSYSTEM STATUS option from the CEA INSERTION ACCOUNTING MENU.
   d. **SELECT** a printer.

6.5.B CEA Insertion Accounting (Continued)

3. CEA GROUP ARO UPDATE

> **NOTE**
> This option is utilized to update an entire CEA Group to 135.0". Updating to other than Full Out position must be done from the DAS.

a. **SELECT** CEA FUNCTIONS from the MAIN MENU.

b. **SELECT** CEA Group ARO Update from the CEA FUNCTIONS MENU.

c. **ENTER** the function number corresponding to the desired CEA GROUP into the prompt field at the bottom of the CEA GROUP ARO option page.

> **NOTE**
> The position of all the CEAs in that group is updated to 135".

4. CEA DATA LOG

> **NOTE**
> The CEA Data Log process executes every five seconds for recording the final position (movement **NOT** being detected over a 10 second period) of each CEA movement within a CEA position data event file. Fourteen days of activity may be stored to accommodate the largest of the following:
> 1. 200 final movements of all 65 CEAs,
> 2. 4000 movements for a single CEA,
> 3. 1000 movements of group 5 CEA.
>
> **IF** the data file reaches capacity,
> **THEN** the report is printed automatically on the Incore printer. CEAs that are **NOT** detected as moved, will **NOT** show on any of the reports.

a. CEA Log Automatic Printout

- When the file is 90% full the CEA LOG is automatically printed on the Incore printer and recording to the file continues. No operator action required

6.6 COOLING WATER MONITOR [INFORMATION USE]

NOTE

This function enables the operator to view current values of the Circulating Water System parameters and to adjust the lag time between inlet and discharge water temperature for each pump. The COOLING WATER MONITORING calculation is activated every minute. The function monitors the change in reactor power level and the temperature rise between inlet and discharge of the cooling water drawn from the Chesapeake Bay. The following table shows the pumps, associated inlet temperature and outlet temperature Point IDs:

PUMP	INLET TEMPERATURE	OUTLET TEMPERATURES
X2110	T5225	T5228A, T5232A
X2111	T5229	T5228A, T5232A
X2112	T5233	T5228A, T5232A
X2113	T5237	T5240A, T5244A
X2114	T5241	T5240A, T5244A
X2115	T5245	T5240A, T5244A

Average inlet and outlet temperatures are calculated from measurements that are **NOT** discarded. The differences between these two averages is the temperature rise between the inlet and outlet. If all pumps are OFF, the temperature rise is set to unreliable zero. This function also calculates the following:

1. Hourly average inlet and outlet temperatures,
2. Hourly average temperature rise,
3. Temperature rise necessary to net a 12 degree hourly average.

Fifteen minutes of inlet temperatures are maintained to allow the operator to change the lag time between inlet and discharge temperature.

A. **CHANGE** Cooling Water Monitor lag times as follows:

NOTE

Two outlet temperatures will be averaged for the first 3 pumps and two separate outlet temperatures will be averaged for the other 3 pumps.

1. **SELECT** the COOLING WATER MONITOR option from the MAIN MENU.
2. **SELECT** COOLING WATER MONITOR from the COOLING WATER MONITOR MENU.
3. **CHANGE** any of the lag times (0-15 minutes).

6.6 COOLING WATER MONITOR [INFORMATION USE] (Continued)

B. **DISPLAY** the Cooling Water Monitor Diagram as follows:

1. **SELECT** the COOLING WATER MONITOR option from the MAIN MENU.

2. **SELECT** the COOLING WATER MONITOR DIAGRAM from the COOLING WATER MONITOR MENU.

****** END ******

6.7 CORE PHYSICS [INFORMATION USE]

A. **PRINT** the Flux Tilt Option as follows:

NOTE

The Azimuthal/Quadrant Flux Tilt Option is activated on demand and automatically each hour. The function calculates and prints the detailed tilt for each of the seven four fold symmetric Incore detector groups at each of the four planes and for the upper and lower excore detectors. Detectors identified as inoperable by the operator are **NOT** included in calculations. In 4/4 the symmetric groups that have at least one detector failed will have '*'s. In 3/4 the symmetric groups that have at least two detectors failed will have '*'s. The report is generated in three parts containing the following:
PART 1, The azimuthal flux tilt for the upper and lower excore detectors
PART 2, The azimuthal flux tilt at each detector plane for all symmetric groups having four operable detectors **AND** Vector average tilt, vector average tilt orientation, and average tilt magnitudes for each detector plane
PART 3, This part is identical to the second except the fractional tilt magnitudes for each detector plane are for all symmetric groups having at least three operable detectors

1. **SELECT** the CORE PHYSICS option from the MAIN MENU.

2. **SELECT** the FLUX TILT option from the CORE PHYSICS MENU to print the Azimuthal/Quadrant Flux Tilt Report on the Incore printer.

B. CECOR Option

NOTE

The CECOR option provides the following functions when above 20% power:
- Demand calculations and reports
- Identify failed detectors
- List of Errors

The following conditions cause an unsuccessful execution of the CECOR DEMAND EXECUTION option or periodic CECOR calculations:
1. Total CECOR disabled.
2. Periodic disable (periodic executions only).
3. PA912 equal 0.
4. CETIP less than 0.

A demand request is denied when a demand run is in progress. A periodic run will be queued to execute when the demand run is complete.

1. **INITIATE** the CECOR Demand Execution Option as follows:

NOTE

The CECOR calculations mode is activated periodically and on demand to give the plant personnel information regarding core power, fuel burnup, power tilt, and peaking factors. CECOR is executed automatically every 30 minutes when periodic activations are enabled.

a. **SELECT** the CORE PHYSICS option from the MAIN MENU.

b. **SELECT** the CECOR option from the CORE PHYSICS MENU.

NOTE

The number and types of reports output will be according to the option/report matrix for each option. The output will be printed on Incore printer. The INCORE ANALYSIS MENU is re-displayed.

c. **SELECT** any one of the 5 demand execution reports shown.

6.7.B CECOR Option (Continued)

2. **SELECT** the Manually Failed Incore Detector Display as follows:

NOTE

This option is a demand function that allows the operator to enter failed detectors by computer ID and to reinstate formerly failed detectors. The file is used as input to the CECOR, BASSS, and Azimuthal/ Quadrant Flux Tilt (TQ) functions and removes the failed detectors from these calculations. If a detector is marked failed by BASSS or CECOR and shows up in the CECOR/BASSS failed Incore detector display, then this detector must also be marked failed using this function once the detector is verified as failed.

a. **SELECT** the CORE PHYSICS option from the MAIN MENU.

b. **SELECT** the CECOR option from the CORE PHYSICS MENU. (The CECOR FUNCTIONS MENU is displayed)

c. **SELECT** the MANUALLY FAILED INCORE DETECTORS option from the CECOR FUNCTIONS MENU.

CAUTION

Notify NFM as soon as there is a change in failed detector status to ensure Technical Specification operability requirements are met.

d. **UPDATE** Failed Detectors as follows:

(1) **RECORD** the current failed detectors.

(2) **ENTER** the point ID at the bottom of the display in the field marked ENTER FAILED DETECTOR ID.

(3) **REPEAT** the previous step until all new failed detectors have been entered.

(4) **POSITION** the cursor next to EXIT TO CECOR FUNCTIONS MENU.

(5) **DEPRESS** <XMIT>.

(6) **RECORD** the current failed detectors.

(7) **COMPARE** the before and after hard copies for correct entering of failed detectors.

(8) **NOTIFY** NFM of the updated failed detectors.

6.7.B.2 CECOR Option (Continued)

e. **REINSTATE** Failed Detectors as follows:

(1) **PLACE** an 'x' in the box to the left of each detector point ID to be reinstated.

(2) **DEPRESS** <XMIT>.

(3) **POSITION** the cursor next to EXIT TO CECOR FUNCTIONS MENU.

(4) **DEPRESS** <XMIT>.

3. **INITIATE** the CECOR/BASSS Failed Incore Detectors Option as follows:

NOTE

The CECOR/BASSS Failed Detector display is a demand function that enables the operator to view previously unknown failed detectors which have been flagged by the CECOR/BASSS program as failed.

a. **SELECT** the CORE PHYSICS option from the MAIN MENU.

b. **SELECT** the CECOR option from the CORE PHYSICS MENU.

c. **SELECT** the CECOR/BASSS FAILED INCORE DETECTORS option from the CECOR FUNCTIONS MENU.

6.7.B CECOR Option (Continued)

NOTE

The CECOR/BASSS FAILED DETECTORS Display is displayed, showing the CECOR and BASSS currently identified failed detectors. This list will **NOT** contain previously known failed detectors which have been entered into the MANUALLY FAILED INCORE DETECTORS OPTION.

4. **SELECT** the CECOR/BASSS Error Display as follows:

NOTE

The CECOR/BASSS Error Display is a demand function that enables the operator to view all errors determined by CECOR and BASSS. This displays only error numbers. The operator has to go to NEOP-301 to get an explanation of what the numbers mean.

a. **SELECT** the CECOR PHYSICS option from the MAIN MENU.

b. **SELECT** the CECOR option from the CECOR PHYSICS MENU.

c. **SELECT** the CECOR/BASSS ERRORS DISPLAY option from the CECOR FUNCTIONS MENU.

****** END ******

6.8 SYSTEM DIAGRAM [INFORMATION USE]

NOTE
This section describes how to activate and modify system diagrams on the CRT. Some diagrams are still under development.

A. **VIEW** a System Diagram as follows:

1. **SELECT** the SYSTEM DIAGRAMS function from the MAIN MENU.
2. **SELECT** the desired diagram from the SYSTEMS DIAGRAMS MENU.

B. **UPDATE** UNIT 1(2) STATUS System Diagram as follows:

1. **SELECT** the SYSTEM DIAGRAMS function from the MAIN MENU.
2. **SELECT** the UNIT 1(2) STATUS from the SYSTEMS DIAGRAMS MENU.

NOTE
Page 1 of the UNIT 1(2) STATUS is displayed. <XMIT> is depressed to move the cursor to the lower right hand corner of the screen.

3. **DEPRESS** <XMIT>.
4. **CHECK** the cursor in the lower right hand corner of the screen **AND DEPRESS** <XMIT>.
5. **ENTER** the page to be edited.
6. **DEPRESS** <XMIT>.
7. **CHECK** the cursor on the EDIT field **AND DEPRESS** <XMIT>.
8. **TAB** the cursor to the field to be edited.
9. **EDIT** data as required.
10. **WHEN** editing is complete, **THEN DEPRESS** <XMIT>.
11. **DEPRESS** <ABORT> to return to page 1.
12. **DEPRESS** <ABORT> **OR** <MAIN MENU> to return to the Main Menu.

6.8 SYSTEM DIAGRAM [INFORMATION USE] (Continued)

NOTE

- The DECAY HEAT REMOVAL STATUS System Diagram must be updated when initially selected **AND** as conditions change that affect the status of any static parameter displayed.
- Selected CETs may be changed by ISD, upon request. Selected CETs may only be exchanged with a CET within the same core quadrant.

C. **UPDATE** the DECAY HEAT REMOVAL STATUS System Diagram as follows:

1. **SELECT** the SYSTEM DIAGRAMS function from the MAIN MENU.
2. **SELECT** the UPDATE DECAY HEAT REMOVAL STATUS option.
3. **ENTER** the current date and time.
4. **TAB** the cursor to the POKE TAB field for the parameter to be changed.
5. **DEPRESS** <XMIT> to toggle the parameter status.
6. **DEPRESS** <ABORT> to return to the Main Menu.
7. **SELECT** the DISPLAY DECAY HEAT REMOVAL STATUS option to view the updated diagram.

****** END ******

6.9 DEVICE CONTROL [INFORMATION USE]

A. Device Test

NOTE

- The DEVICE **TEST** function allows the operator to remove and restore peripherals from service, and perform on-line device tests in a serial manner for the following peripherals:

  - Line Printers
  - System Consoles
  - CRTs
  - Keyboards
  - Magnetic Tape Units
  - Analog Trend Pens
  - Digital Displays
  - Cassette Drive
  - Plotter

  This function automatically replaces the removed device with its assigned backup device. Once initiated each test continues until
  (1) the device fails,
  (2) the test times out (approximately 2 minutes), or
  (3) the test is cancelled via the CANCEL DEVICE function.

- At the completion of the test the printer is returned to service.

1. **PERFORM** a Line Printer Test as follows:

NOTE

IF a printout is ongoing on the printer that will be tested then when the printer is taken off-line,
THEN the backup will take over the print with no loss of data. The following printer failovers take place:

- Alarm printer to the Utility printer
- Utility printer to the Alarm printer
- Incore printer to the 72' Computer Room printer
- 72' Computer Room printer to the Incore printer

a. **SELECT** the DEVICE CONTROL function from the MAIN MENU.

b. **SELECT** the DEVICE TEST option from the DEVICE CONTROL MENU.

6.9.A.1 Device Test (Continued)

NOTE

The operator is presented with the DEVICE TEST SCREEN. If the LINE PRINTER field on the DEVICE TEST DISPLAY indicates the device is on-line then after the first XMIT the operator will be presented with the MENU again and the field will indicate the device is now off-line for testing off-line. The XMIT device must be selected again and the XMIT key must be pressed a second time to start the test.

c. **SELECT** the LINE PRINTER to be tested.

d. **DEPRESS** <XMIT>.

e. **OBSERVE** the following:

(1) The display on the requesting CRT displays a message for approximately 3 to 4 seconds.

(2) Printing is taking place on the requested line printer.

(3) The backup line printer is operational.

(4) The DEVICE **TEST** screen is returned to the CRT screen to begin other device tests.

(5) When the LINE PRINTER is removed from service it is ALARMED on the operational Alarm printer.

f. **REMOVE** the output from the line printer **AND CHECK** the following:

- A page eject is performed at the beginning and end of the test
- The output consists of 22 lines of a 132 character line

6.9.A Device Test (Continued)

2. **PERFORM** a CRT/KEYBOARD Test as follows:

> **NOTE**
> This test may **NOT** be performed on the requesting device.

a. **SELECT** the DEVICE CONTROL function from the MAIN MENU.

b. **SELECT** the DEVICE TEST option from the DEVICE CONTROL MENU.

> **NOTE**
> If the CRT or KEYBOARD field on the DEVICE TEST DISPLAY indicates the device is on-line then after the first XMIT the operator will be presented with the MENU again and the field will indicate the device is now off-line for testing off-line. The device must be selected again and the XMIT key must be pressed a second time to start the test.

c. **SELECT** the CRT or KEYBOARD to be tested. (The CRT# or KEYBOARD# are in matched pairs for this test)

d. **DEPRESS** <XMIT>.

e. **OBSERVE** the following:

- The display on the requesting CRT displays a message that the CRT or KEYBOARD test has started
- When the CRT or KEYBOARD is removed from service it is ALARMED on the operational Alarm printer

f. **WITHIN 1 minute,**
THEN DEPRESS <XMIT> on the device under test. Failure to do so will cause the device to lock-in in the test mode

g. **CHECK** the following:

- The DEVICE TEST DISPLAY screen is returned to the requesting CRT
- The device under test is returned to service ON-LINE

6.9.A Device Test (Continued)

3. **PERFORM** an Analog Trend Pen Test as follows:

> **NOTE**
> This test outputs data to the recorder starting with the lowest value and successively increasing the output value at approximately 250 ms. intervals until the highest value is reached. The value is then rolled back to the lowest value, which produces a sawtooth pattern on the recorder demonstrating the pens full range.

a. **SELECT** the DEVICE CONTROL function from the MAIN MENU.

b. **SELECT** the DEVICE TEST option from the DEVICE CONTROL MENU.

> **NOTE**
> If the ANALOG TREND PENS field on the DEVICE MENU indicates the device is ON-LINE then after the first XMIT the operator will be presented with the MENU again and the field will indicate the device is now off-line for testing off-line. The device must be selected again and the XMIT key must be pressed a second time to start the test.

c. **SELECT** the ANALOG TREND PENS to be tested.

d. **DEPRESS** <XMIT>.

e. **CHECK** the following:

- No test error messages are returned to the requesting CRT
- The backup analog trend pens unit is operational
- The DEVICE TEST screen is returned to the screen to begin other device tests
- When the ANALOG TREND PENS is removed from service it is ALARMED on the operational Alarm printer
- The proper sawtooth pattern is produced on the recorder
- All previous assignments are returned after the test

****** END ******

6.9 DEVICE CONTROL [INFORMATION USE] (Continued)

B. Device Control

1. **INITIATE** the Cancel Device option as follows:

> **NOTE**
> The CANCEL DEVICE function allows the operator to cancel a current application running on a display device via the DEVICE CONTROL MENU.

a. **SELECT** the DEVICE CONTROL function from the MAIN MENU.

b. **SELECT** the CANCEL DEVICE option from the DEVICE CONTROL MENU.

c. **SELECT** the device for cancellation.

d. **DEPRESS** <XMIT>.

> **NOTE**
> The message, UNABLE TO CANCEL THE FUNCTION RUNNING ON THE SELECTED DEVICE will be displayed if the operator is signed on at a lower access level than the selected device.

2. **PERFORM** a CRT ALIGNMENT test as follows:

a. **SELECT** the DEVICE CONTROL function from the MAIN MENU.

b. **SELECT** the CRT ALIGNMENT option from the DEVICE CONTROL MENU.

c. **OBSERVE** the CRT ALIGNMENT TEST SCREEN for color and alignment.

d. **PAGE** forward to the Alternate Test screen. This page is a full screen of '+'s.

e. **OBSERVE** this page for screen linearity.

f. **DEPRESS** <ABORT> to exit the CRT ALIGNMENT test.

****** END ******

6.10 ALARM PROCESSING [INFORMATION USE]

NOTE

- The following four function keys are active whenever the Alarm Display is the current application on the CRT. At other times, these keys are ignored:
  - ALARM ACKN POINT; to acknowledge a single point
  - ALARM ACKN PAGE; to acknowledge an entire page
  - ALARM MESSG DELETE; to delete a single alarm message
  - ALM CLEAR ACKN; to clear return to normal messages
- The ALARM POINT ACKN and ALARM PAGE ACKN keys acknowledge and reset the 1C06(2C06) "SELECTED COMPUTER POINT" annunciator.

A. **ACKNOWLEDGE** a Point in alarm from the menu as follows:

NOTE

The POINT ACKNOWLEDGE option provides the capability to acknowledge points in alarm. The operator acknowledges the alarm messages on the alarm display by depressing <ALARM POINT ACKN> or <ALARM PAGE ACKN> or selecting the POINT ACKNOWLEDGE or SYSTEM ACKNOWLEDGE function from the ALARM PROCESSING MENU. The different methods by which points in alarm can be acknowledged are as follows:

- A single point in alarm
- All points appearing on an alarm display page
- All points in alarm Return To Normal (green) and acknowledged alarms (steady state red) are **NOT** affected by the alarm acknowledge function.

Only unacknowledged alarms, which are white with a flashing point ID, may be acknowledged.

1. **SELECT** the ALARM PROCESSING function from the MAIN MENU.
2. **SELECT** the POINT ACKNOWLEDGE option from the ALARM PROCESSING MENU.

NOTE

A prompt for the point ID of the point to be acknowledged is displayed.

3. **ENTER** the point ID of one of the points displayed on the Alarm CRT.

6.10 ALARM PROCESSING [INFORMATION USE] (Continued)

NOTE
The point in alarm is acknowledged, the point ID stops flashing, the message turns red, the Alarm CRT is updated, and the ALARM PROCESSING MENU is re-displayed.

B. **ACKNOWLEDGE** Points in alarm using the Point Acknowledge Function Key as follows:

1. **SELECT** the ALARM DISPLAY function from the MAIN MENU.
2. **SELECT** either option.
3. **POSITION** the cursor to any white alarm on the ALARM screen.
4. **DEPRESS** <ALARM POINT ACKN>.

NOTE
The alarm selected is acknowledged, the point ID stops flashing, the message turns red, and the Alarm CRT is updated.

C. **ACKNOWLEDGE** Points in alarm using the Page Acknowledge Function Key as follows:

1. **SELECT** the ALARM DISPLAY function from the MAIN MENU.
2. **SELECT** either option.
3. **DEPRESS** <ALARM PAGE ACKN>.

NOTE
All of the alarms on the current page are acknowledged, the point IDs stop flashing, the messages turn red, and the Alarm CRT is updated.

D. **ACKNOWLEDGE** Points in alarm using the System Acknowledge Function Key as follows:

1. **SELECT** the ALARM PROCESSING function from the MAIN MENU.
2. **SELECT** the SYSTEM ACKNOWLEDGE option from the ALARM PROCESSING MENU.

6.10 ALARM PROCESSING [INFORMATION USE] (Continued)

NOTE

All of the points currently in alarm are acknowledged, the point IDs stop flashing, the messages turn red, and the Alarm CRT is updated. The ALARM PROCESSING MENU is displayed.

E. **CLEAR** Points returned to normal alarm using the System Clear Function Key as follows:

NOTE

Both the SYSTEM CLEAR menu option and the ALARM CLEAR function key provide the capability to remove all of the RETURN TO NORMAL alarm messages from the alarm display and the alarm list.

1. **SELECT** the Alarm Processing function from the MAIN MENU.
2. **SELECT** the SYSTEM CLEAR option.

F. **CLEAR** Points returned to normal alarm using the Alarm Clear Function Key as follows:

1. **SELECT** the ALARM DISPLAY function from the MAIN MENU.
2. **SELECT** either option from the ALARM DISPLAY MENU.
3. **DEPRESS** <ALARM CLEAR ACKN>.

6.10 ALARM PROCESSING [INFORMATION USE] (Continued)

NOTE
All of the points in a RETURN TO NORMAL alarm condition are removed.

G. **DELETE** Alarm Messages using the Alarm Message Delete Function Key as follows:

NOTE
The ALARM MESSAGE DELETE function provides the capability to selectively delete messages from the alarm display. The operator positions the cursor to the line selected for deletion on the display and presses the ALARM MESSAGE DELETE function key. The line is removed from the display and the display is repacked. As long as the alarm does **NOT** change state, it is **NOT** displayed. On a change of state, normal alarm processing takes place and the alarm is re-displayed.

1. **SELECT** the ALARM DISPLAY function from the MAIN MENU.
2. **SELECT** either option.
3. **USE** the PAGE FWD and PAGE BACK keys to find the page containing the alarm message to be deleted.
4. **POSITION** the cursor to a point's alarm message.

NOTE
The alarm selected is removed and the display is repacked.

5. **DEPRESS** <ALARM MESSAGE DELETE>.

****** END ******

6.11 POINT PROCESSING [INFORMATION USE]

NOTE

The Point Processing function enables the operator to access four important point services:

- Point Display
- Point Modify
- Point Delete
- Point Restore

These services permit the operator to view information about any point in the data base and modify parameters on-line.

A. Point Display

NOTE

This function displays current point information on the CRT, with a refresh rate of 5 seconds.

1. **DISPLAY** a point using the Point Display Function Key as follows:

   a. **DEPRESS** <POINT DISPL>.

   b. **ENTER** a point ID.

2. **DISPLAY** a point through the Point Processing Menu as follows:

   a. **SELECT** the POINT PROCESSING function from the MAIN MENU.

   b. **SELECT** POINT DISPLAY from the POINT PROCESSING MENU.

   c. **DEPRESS** <XMIT>.

****** END ******

6.11 POINT PROCESSING [INFORMATION USE] (Continued)

B. Point Modify

NOTE

The POINT MODIFY function allows the operator to manually perform the following operations:

- Manually change digital states and analog values
- Put a point on or off scan
- Set alarming for a point active or inactive
- Change warning, alert, and critical alarm limits
- Turn specific alarm levels on or off
- Change rate of ascent and rate of descent limits
- Change alarm priorities
- Change the abnormal flag for digital points
- Change the master point for a group point

1. **SELECT** POINT PROCESSING from the MAIN MENU.

2. **SELECT** POINT MODIFY from the POINT PROCESSING MENU.

3. **ENTER** a Point ID.

4. **ENSURE** applicable requirements of the following are implemented:

   - EN-1-100, when modifying points whose values are controlled by the Setpoint Log

   - EN-1-100, when modifying SPDS points

   - ATTACHMENT 1, REMOVAL OF AN ALARM POINT FROM SERVICE / CHANGING COMPUTER ALARM LIMITS.

5. **CHANGE** the analog value or digital state as follows:

   a. **TAB** the cursor to the VALUE entry field.

   b. **ENTER** a value for an analog point **OR** a state for a digital point.

   c. **INDEPENDENTLY VERIFY** that the correct values have been properly entered.

   d. **WHEN** all desired changes have been completed, **THEN DEPRESS** <XMIT>.

6.11.B Point Modify (Continued)

> **NOTE**
> The new value/state is accepted, the point is removed from scan and except for analog or digital constants the quality tag is changed to 'E'.

6. **REMOVE** a point from scan **OR RETURN** a point to scan as follows:

   a. **TAB** the cursor to the OFF SCAN (Y/N) entry field.

   b. **TYPE** <Y> to remove a point from scan.

   c. **TYPE** <N> to restore a point to scan.

   d. **WHEN** all desired changes have been completed, **THEN DEPRESS** <XMIT>.

7. **REMOVE** or **RESTORE** alarm checking to a point as follows:

   a. **TAB** the cursor to the POINT ALARM INACTIVE (Y/N) entry field.

   b. **TYPE** <Y> to remove alarm checking from a point.

   c. **TYPE** <N> to restore alarm checking to a point.

   d. **WHEN** all desired changes have been completed, **THEN DEPRESS** <XMIT>.

8. **CHANGE** analog points' low or high alarm limits as follows:

   a. **TAB** the cursor to the entry field for whichever limit listed below is to be changed.

LOW LIMIT	HIGH LIMIT
Warning	Warning
Alert	Alert
Critical	Critical
Rate of Descent	Rate of Ascent
Dead Band Low	Dead Band High

   b. **ENTER** the new Limit value.

   c. **REPEAT** as necessary for the other high and low limit.

   d. **WHEN** all desired changes have been completed **THEN DEPRESS** <XMIT>.

6.11.B Point Modify (Continued)

9. **INHIBIT** an incremental alarm limit as follows:

> **NOTE**
> Changing a limit to inactive prevents a point from alarming at that level even if the limit value is reached.

a. **TAB** the cursor to the LIMIT OFF (Y/N) entry field for whichever limit listed below is to be inhibited or enabled.

LOW LIMIT	HIGH LIMIT
Warning	Warning
Alert	Alert
Critical	Critical

b. **TYPE** <Y> to inhibit an incremental limit.

c. **TYPE** <N> to enable an incremental limit.

d. **WHEN** all desired changes have been completed
THEN DEPRESS <XMIT>.

10. **CHANGE** the abnormal state of a digital point as follows:

> **NOTE**
> Point Modify allows the operator to manually change the abnormal flag for the states of a digital point. A digital point has a STATE0 and a STATE1. A quad state digital point has two additional states: a STATE2 and a STATE3. Any of the states or none of the states can be designated as abnormal. Abnormal states produce alarms.

a. **TAB** the cursor to the STATE0 ABNORMAL (Y/N) entry field.

b. **TYPE** <Y> if STATE0 is the abnormal state.

c. **TYPE** <N> if STATE0 is the normal state.

d. **TAB** the cursor to the STATE1 ABNORMAL (Y/N) entry field.

e. **TYPE** <Y> if STATE1 is the abnormal state.

f. **TYPE** <N> if STATE1 is the normal state.

g. **IF** the point is a quad state digital point,
THEN REPEAT above steps for STATE2 and STATE3.

h. **WHEN** all desired changes have been completed,
THEN DEPRESS <XMIT>.

6.11.B Point Modify (Continued)

11. **CHANGE** alarm priority as follows:

> **NOTE**
> Point Modify allows the operator to manually change the Alarm Message priorities (0-15) of an analog or digital point. When the alarm by priority option is chosen for the alarm display the position of an alarm on the display is determined by its priority. Priority 0 is used to indicate that alarms for a point should **NOT** be displayed. Priority 15 is the highest displayable priority; 1 is the lowest.

a. **TAB** the cursor to the desired alarm message priority entry field as shown below. (Alarm message priorities are specified for both acknowledged and unacknowledged alarms)

ANALOG POINTS:

LOW LIMIT	HIGH LIMIT
Warning	Warning
Alert	Alert
Critical	Critical
Rate of Descent	Rate of Ascent

Return To Normal

DIGITAL POINTS:

Alarm message
Return to normal

b. **ENTER** the desired priority level.

c. **WHEN** all desired changes have been completed, **THEN DEPRESS** <XMIT>.

****** END ******

6.11 POINT PROCESSING [INFORMATION USE] (Continued)

C. Point Delete

NOTE
The POINT DELETE function allows the operator to quickly delete a point from processing. Any point removed from processing is automatically removed from alarm checking.

1. **ENSURE** applicable requirements of the following are implemented:
   - EN-1-100, when modifying points whose values are controlled by the Setpoint Log
   - EN-1-100, when modifying SPDS points
   - ATTACHMENT 1, REMOVAL OF AN ALARM POINT FROM SERVICE / CHANGING COMPUTER ALARM LIMITS.
2. **DELETE** a Point through the point processing menu as follows:
   a. **SELECT** the POINT PROCESSING function from the MAIN MENU.
   b. **SELECT** the POINT DELETE function.
   c. **ENTER** a point to be removed from processing.
3. **DELETE** a Point using POINT DEL function key as follows:
   a. **DEPRESS** <POINT DEL>.
   b. **ENTER** a point to be removed from processing.

****** END ******

D. Point Restore

NOTE
The POINT RESTORE function allows the operator to quickly restore a point to processing. Any point restored to processing is automatically restored to alarm checking.

1. **RESTORE** a Point through the point processing menu as follows:
   a. **SELECT** the POINT PROCESSING function from the MAIN MENU.
   b. **SELECT** the POINT RESTORE function.
   c. **ENTER** a point to be restored to processing.

6.11.D Point Restore (Continued)

2. **RESTORE** a Point using the POINT RESTORE function key as follows:

   a. **DEPRESS** <POINT RESTORE>.

   b. **ENTER** a point to be restored to processing.

3. **ENSURE** applicable requirements of the following are implemented:

   - EN-1-100, when modifying points whose values are controlled by the Setpoint Log
   - EN-1-100, when modifying SPDS points
   - ATTACHMENT 1, REMOVAL OF AN ALARM POINT FROM SERVICE / CHANGING COMPUTER ALARM LIMITS.

****** END ******

NOTE

This section will adjust the computer points for RCP Oil Levels so that they agree with the local oil levels. Example: L156" = L156 + XVKL156. If L156 equals .75 and the sightglass reading is .25, then XVKL156 should be set to -.5. This will result in the compensated point, L156" being set to .25.

E. RCP Oil Level Adjustment

NOTE

- The difference determined in this step will be used to set the adjustment points.
- Due to the following computer points being noisy, approximate an average value based on observation for at least 1 minute to ensure that the final compensated point is within the tolerance mandated by OP-6.
- These DAS computer points are the uncompensated raw data points from the field.

1. **DETERMINE** the difference between the RCP Oil Levels obtained from OP-6 **AND** the following computer points: (Ex. L156 minus the local reading)

   - L156, RCP 11A (21A) UPR OIL LEVEL (UNCOMPENSATED)
   - L157, RCP 11A (21A) LWR OIL LEVEL (UNCOMPENSATED)
   - L166, RCP 11B (21B) UPR OIL LEVEL (UNCOMPENSATED)
   - L167, RCP 11B (21B) LWR OIL LEVEL (UNCOMPENSATED)
   - L176, RCP 12A (22A) UPR OIL LEVEL (UNCOMPENSATED)
   - L177, RCP 12A (22A) LWR OIL LEVEL (UNCOMPENSATED)
   - L186, RCP 12B (22B) UPR OIL LEVEL (UNCOMPENSATED)
   - L187, RCP 12B (22B) LWR OIL LEVEL (UNCOMPENSATED)

6.11.E RCP Oil Level Adjustment (Continued)

2. Using the Point Modify procedure, **ENTER** the value determined in step 1 for each point, as the value for the corresponding Offset Point:

   - XVKL156, RCP 11A (21A) UPR OIL LEVEL OFFSET
   - XVKL157, RCP 11A (21A) LWR OIL LEVEL OFFSET
   - XVKL166, RCP 11B (21B) UPR OIL LEVEL OFFSET
   - XVKL167, RCP 11B (21B) LWR OIL LEVEL OFFSET
   - XVKL176, RCP 12A (22A) UPR OIL LEVEL OFFSET
   - XVKL177, RCP 12A (22A) LWR OIL LEVEL OFFSET
   - XVKL186, RCP 12B (22B) UPR OIL LEVEL OFFSET
   - XVKL187, RCP 12B (22B) LWR OIL LEVEL OFFSET

3. **CHECK** the following points to match the levels recorded in OP-6.

   - L156", RCP 11A (21A) UPR OIL LEVEL
   - L157", RCP 11A (21A) LWR OIL LEVEL
   - L166", RCP 11B (21B) UPR OIL LEVEL
   - L167", RCP 11B (21B) LWR OIL LEVEL
   - L176", RCP 12A (22A) UPR OIL LEVEL
   - L177", RCP 12A (22A) LWR OIL LEVEL
   - L186", RCP 12B (22B) UPR OIL LEVEL
   - L187", RCP 12B (22B) LWR OIL LEVEL
   - **IF** the computer points do **NOT** match the level recorded in OP-6, within the tolerance allowed by OP-6,
     THEN REPEAT steps 1 and 2 to modify the affected points.

4. **IF** any of the the computer points in step 3 do **NOT** match the level recorded in OP-6,
   THEN REPEAT steps 1 and 2 to modify the affected points.

****** END ******

6.12 GROUP FUNCTION [INFORMATION USE]

NOTE

The GROUP FUNCTION provides the following two task options for operator selection:

- VIEW GROUP DISPLAY for the selection and review of any one of the currently defined groups.
- EDIT GROUP for the capability to revise any one of the current parameters for each of the 280 allocated groups. Each of the 280 unique point groups may have up to 40 analog or digital points assigned as members.

A. **View Group Display**

1. **VIEW** the Group display through the group function menu as follows:

   a. **SELECT** the GROUP FUNCTION from the MAIN MENU.

   b. **SELECT** the VIEW GROUP DISPLAY function from the GROUP TASK OPTION menu.

NOTE

The GROUP MENU consists of several pages of group point listings.

   c. **DEPRESS** <PAGE FWD> or <PAGE BACK> as necessary to find the page containing the desired group number.

   d. **SELECT** a group to display.

NOTE

The first page of the GROUP DISPLAY for the selected group is displayed. The appropriate fields are updated at a 5 second rate.

   e. **DEPRESS** <PAGE FWD> or <PAGE BACK> to view the other page of the GROUP DISPLAY.

   f. **DEPRESS** <ABORT> to return to the Group Task Option Menu from the GROUP DISPLAY.

6.12.A GROUP FUNCTION [INFORMATION USE] (Continued)

2. **VIEW** the Group display using the GROUP DISP function key as follows:

   a. **DEPRESS** <GROUP DISP>.

   b. **DEPRESS** <PAGE FWD> and <PAGE BACK> as necessary to find the page containing the desired group number.

   c. **SELECT** a group to display.

> **NOTE**
> The first page of the GROUP DISPLAY for the selected group is displayed. The appropriate fields are updated at a 5 second rate.

   d. **DEPRESS** <PAGE FWD> or <PAGE BACK> to view the other page of the GROUP DISPLAY.

   e. **DEPRESS** <ABORT> to return to the Group Menu from the GROUP DISPLAY.

B. **EDIT** a Group as follows:

> **NOTE**
> - Groups 1-40 are reserved groups and should **NOT** be edited.
> - Points assigned to Groups 165 and 265 will cause the 1C06(2C06) "SELECTED COMPUTER POINT" annunciator to alarm if the Points Hi or Lo limit is reached or if the Digital Point is in an abnormal state.
> - The EDIT GROUP function provides the on-line capability to define and name groups of established data base points and revise their current parameters at any time.

1. **SELECT** the GROUP FUNCTION from the MAIN MENU.

2. **SELECT** the EDIT GROUP function from the GROUP TASK OPTION MENU.

3. **DEPRESS** <PAGE FWD> and <PAGE BACK> as necessary to find the page containing the desired group number.

4. **SELECT** a group to edit.

6.12.B GROUP FUNCTION [INFORMATION USE] (Continued)

NOTE

The first page of the EDIT GROUP DISPLAY is displayed. The screen has a header with the following items:

- Group number
- Group name
- Master point ID

There are forty other reverse video fields on the screen where the point IDs of points assigned to this group point are displayed.

5. **MAKE** any of the following changes:

   a. **ENTER** blanks over the displayed point ID to delete an existing point, group name or master point ID.

   b. **ENTER** the ID in the blank fields to add a point ID, group name or master point.

   c. **ENTER** a new point ID group name or master point over an existing one to change a point ID group name or master point.

   d. **WHEN** all desired changes have been entered **THEN DEPRESS** <XMIT>.

6. **DEPRESS** <PAGE FWD>.

7. **IF** the changes are satisfactory, **THEN SELECT** the ACCEPT option.

8. **IF** the changes are **NOT** satisfactory, **THEN SELECT** the REJECT option.

   - The EDIT GROUP DISPLAY is re-displayed and all previous changes made are displayed

   - **MAKE** changes as described above

****** END ******

6.13 OUTPUT REPORTS AND SUMMARIES [INFORMATION USE]

A. **PRINT** a Points Out of Scan Summary as follows:

> **NOTE**
> This summary provides the capability for printout of all addressable points that have been deleted from scan, flagged as BAD, have invalid composed calculations and includes those points containing manually inserted values, in alphanumeric order on the 72' Computer Room printer.

1. **SELECT** the OUTPUT REPORT/SUMMARY function from the MAIN MENU.
2. **SELECT** the POINTS OUT OF SCAN SUMMARY.
3. **DEPRESS** <XMIT>.

B. **PRINT** the Alarm Limit Review as follows:

> **NOTE**
> This summary provides the capability for printout, on the 72' Computer Room printer, of alarm limits and current value for all system points that are assigned alarm limits. Note that the abnormal state for a digital point is considered the points' limit.

1. **SELECT** the OUTPUT REPORT/SUMMARY function from the MAIN MENU.
2. **SELECT** the ALARM LIMIT REVIEW.
3. **DEPRESS** <XMIT>.

C. **PRINT** the Alarm Summary on the 72' Computer Room printer as follows:

1. **SELECT** the OUTPUT REPORT/SUMMARY function from the MAIN MENU.
2. **SELECT** the ALARM SUMMARY.
3. **DEPRESS** <XMIT>.

D. **PRINT** the Operator Actions Log on the Utility printer as follows:

1. **SELECT** the OUTPUT REPORT/SUMMARY function from the MAIN MENU.
2. **SELECT** the OPERATOR ACTIONS LOG.
3. **DEPRESS** <XMIT>.

E. **PRINT** the CEA LOG ALL CEAs on the Incore printer as follows:

1. **SELECT** the OUTPUT REPORT/SUMMARY function from the MAIN MENU.
2. **SELECT** the CEA LOG ALL CEAS.

6.13 OUTPUT REPORTS AND SUMMARIES [INFORMATION USE] (Continued)

F. **PRINT** the NSSS Data Logger summary as follows:

> **NOTE**
> This function provides the capability for printout on the Incore printer, of a Nuclear Steam Supply System Snapshot Summary. The summary contains current value of the data base points identified in the report definition created using the Summary/Report Editor functions.

1. **SELECT** the OUTPUT REPORT/SUMMARY function from the MAIN MENU.
2. **SELECT** the NSSS DATA LOGGER from the REPORT/SUMMARY MENU.

G. **PRINT** the Incore Detector Log on the Incore printer as follows:

1. **SELECT** the OUTPUT REPORT/SUMMARY function from the MAIN MENU.
2. **SELECT** the INCORE DETECTOR LOG from the REPORT/SUMMARY MENU.
3. **SELECT** either the Hourly Report or the Millivolt Reading from the INCORE DETECTOR LOG MENU.

H. **PRINT** the Daily Log as follows:

> **NOTE**
> This section checks the capability for printout on the Utility printer, of up to 125 preselected points that have been summarized and collected. The printout also includes the following:
>
> - Quality indicators are shown and calculations using unreliable or out of service data are flagged as UNRELIABLE
> - If the computed value is larger than the assigned field width, asterisks are printed in the field
> - When demand requested, data from midnight to the latest full hour is presented
> - When automatically printed at midnight, data from all 24 hours plus the summary line is printed.

1. **SELECT** the OUTPUT REPORT/SUMMARY function from the MAIN MENU.
2. **SELECT** the DAILY LOG.

I. **PRINT** the Equipment Service Log on the Utility printer as follows:

1. **SELECT** the OUTPUT REPORT/SUMMARY function from the MAIN MENU.
2. **SELECT** EQUIPMENT SERVICE LOG.

6.13 OUTPUT REPORTS AND SUMMARIES [INFORMATION USE] (Continued)

J. **PRINT** the Incore Detector Constants summary on the Incore printer as follows:

1. **SELECT** the OUTPUT REPORT/SUMMARY function from the MAIN MENU.
2. **SELECT** the INCORE DETECTOR CONSTANTS.

****** END ******

6.14 DEMAND PERFORMANCE CALCULATIONS AND REPORTS [INFORMATION USE]

NOTE

The DEMAND PLANT PERFORMANCE CALCULATIONS AND REPORTS functions execute only when requested by the operator. The functions calculate the proper information and format a report for output to a predetermined device and then terminates printing.

A. **PRINT** the Drain Cooler Approach Temperatures report on the 45' Utility printer as follows:

NOTE

The HEATER DRAIN COOLERS APPROACH TEMPERATURE function is used to evaluate the drain cooler approach temperature. This approach difference is defined as the temperature difference between the feedwater entering the cooler and the drain water leaving the cooler.

1. **SELECT** the PLANT PERFORMANCE function from the MAIN MENU.
2. **SELECT** the DEMAND PERFORMANCE CALCULATIONS/REPORTS option.
3. **SELECT** the HEATER DRAIN COOLERS APPROACH TEMPERATURE.

B. **PRINT** the Condenser Performance Calculation report on the 45' Utility printer as follows:

NOTE

The CONDENSER PERFORMANCE function is used to evaluate the following performance parameters:

- The condenser cooling water temperature increase for each flow path
- The heat head for each condenser flow path
- The terminal temperature difference for each condenser flow path

1. **SELECT** the PLANT PERFORMANCE function from the MAIN MENU.
2. **SELECT** the DEMAND PERFORMANCE CALCULATIONS/REPORTS option.
3. **SELECT** the CONDENSER PERFORMANCE CALCULATION option.

6.14 DEMAND PERFORMANCE CALCULATIONS AND REPORTS [INFORMATION USE] (Continued)

C. **PRINT** the Terminal Temperature Difference report on the 45' Utility printer as follows:

> **NOTE**
> The TERMINAL TEMPERATURE DIFFERENCE function is used to evaluate the feedwater heater terminal temperature differences. This terminal difference is defined as the temperature difference between the extraction steam entering the heater and the feedwater leaving the heater.

1. **SELECT** the PLANT PERFORMANCE function from the MAIN MENU.
2. **SELECT** the DEMAND PERFORMANCE CALCULATIONS/REPORTS option.
3. **SELECT** the TERMINAL TEMPERATURE DIFFERENCE option.

D. **PRINT** the Steam Generator Output report on the 45' Utility printer as follows:

> **NOTE**
> The STEAM GENERATOR OUTPUT function executes every two minutes to calculate and evaluate the following items:
>
> - Total feedwater flow
> - Absolute steam generator outlet pressure
> - Fluid enthalpies at the steam generator inlet and outlet
> - Steam flow from each steam generator outlet
> - Thermal power output from each steam generator
> - Plant thermal output power
> - Reactor core output power
>
> The following calculations are part of the design of this function:
>
> - Correct calculation of PA911
> - No calculations when reactor is tripped
> - No calculations when reactor is **NOT** tripped, but reactor is still less than minimum power
> - Correct handling of steam properties when an input parameter is out of range. The results are tagged with a 'U' (UNRELIABLE)

1. **SELECT** the PLANT PERFORMANCE function from the MAIN MENU.
2. **SELECT** the DEMAND PERFORMANCE CALCULATIONS/REPORTS option.
3. **SELECT** the STEAM GENERATOR OUTPUT option.

6.14 DEMAND PERFORMANCE CALCULATIONS AND REPORTS [INFORMATION USE] (Continued)

E. **PRINT** the Turbine/Generator Output report on the 45' Utility printer as follows:

NOTE

The TURBINE/GENERATOR OUTPUT function executes every two minutes to calculate and evaluate the following items:

- The absolute turbine first stage pressure
- The absolute H.P. turbine exhaust pressure
- Absolute main steam header pressure
- The design main steam header pressure
- The corrected turbine first stage pressure
- The turbine heat input
- Gross turbine heat rate
- Net turbine heat rate
- Design gross turbine heat rate and deviation from actual
- Design first stage pressure and deviation from actual

1. **SELECT** the PLANT PERFORMANCE function from the MAIN MENU.
2. **SELECT** the DEMAND PERFORMANCE CALCULATIONS/REPORTS option.
3. **SELECT** the TURBINE/GENERATOR OUTPUT option.

F. **PRINT** the Feed Pumps and Feed Pump Turbines report on the 45' Utility printer as follows:

NOTE

The FEED PUMPS AND FEED PUMP TURBINES function executes and calculates on demand to evaluate the following performance parameters:

- The average pump inlet and outlet temperatures
- The average temperature rise across the pumps
- The design temperature rise across the pumps and the deviation between the design and the actual
- The average pump inlet and outlet enthalpies
- The average enthalpy rise across the pumps
- The design enthalpy rise across the pumps and the deviation between the design and the actual
- The design pump speed and the deviation between the design and the actual

1. **SELECT** the PLANT PERFORMANCE function from the MAIN MENU.
2. **SELECT** the DEMAND PERFORMANCE CALCULATIONS/REPORTS option.
3. **SELECT** the FEED PUMPS AND FEED PUMP TURBINES option.

6.14 DEMAND PERFORMANCE CALCULATIONS AND REPORTS [INFORMATION USE] (Continued)

G. **PRINT** the Axial Shape Index (ASI) Calculations report on the 45' Utility printer as follows:

NOTE

This function executes on a predetermined time interval and the output report may be requested at any time via menu. The report request does no calculations, but only retrieves the proper data from the data base and outputs it to the desired device in the proper format. The AXIAL SHAPE INDEX function uses the excore NI detectors and executes every minute to calculate and evaluate the following items:

- The difference between the lower and upper power range safety detectors
- The sums of the lower and upper power range safety detectors
- The external axial shape indices
- The internal axial shape indices
- The average internal axial shape indices

1. **SELECT** the PLANT PERFORMANCE function from the MAIN MENU.
2. **SELECT** the DEMAND PERFORMANCE CALCULATIONS/REPORTS option.
3. **SELECT** the AXIAL SHAPE INDEX option.

H. **PRINT** the Reactor Dynamic Output report on the 45' Utility printer as follows:

NOTE

This function executes on a predetermined time interval and the output report may be requested at any time via menu. The report request does no calculations, but only retrieves the proper data from the data base and outputs it to the desired device in the proper format. The REACTOR DYNAMIC OUTPUT function executes every two minutes to calculate and evaluate the following items:

- The reactor hot leg and cold leg fluid enthalpies
- The reactor coolant inlet densities
- The gravimetric flow in each reactor coolant loop
- Reactor dynamic thermal output (expressed in both MWt and BTU/HR)
- The reactor core coolant average temperature rise
- The reactor core delta T power

1. **SELECT** the PLANT PERFORMANCE function from the MAIN MENU.
2. **SELECT** the DEMAND PERFORMANCE CALCULATIONS/REPORTS option.
3. **SELECT** the REACTOR DYNAMIC OUTPUT option.

6.14 DEMAND PERFORMANCE CALCULATIONS AND REPORTS [INFORMATION USE] (Continued)

I. **PRINT** the RCS Flow report on the 45' Utility printer as follows:

> **NOTE**
> The REACTOR COOLANT SYSTEM Flow function executes and calculates on demand to evaluate the following performance parameters:
>
> - Calibrations of DP for each RCP and the core DP
> - The volumetric flow rate (gpm) for each pump
> - The total gpm flow
> - The RCS mass flow rate

1. **SELECT** the PLANT PERFORMANCE function from the MAIN MENU.
2. **SELECT** the DEMAND PERFORMANCE CALCULATIONS/REPORTS option.
3. **SELECT** the RCS FLOW option.

J. **DISPLAY** the CECOR/BASSS Values as follows:

> **NOTE**
> The CECOR/BASSS VALUES option is a demand function via menu. The function provides the operator with a snapshot of the values calculated by the latest CECOR/BASSS execution. The output appears on the requesting CRT. If the last execution of CECOR/BASSS was unsuccessful, an execution status on the display will indicate such status.

> **CAUTION**
> The values shown when using this CECOR/BASSS VALUE option are **NOT** the current values of the various parameters but are the values calculated during previous CECOR/BASSS calculation.

1. **SELECT** the PLANT PERFORMANCE function from the MAIN MENU.
2. **SELECT** the DEMAND PERFORMANCE CALCULATIONS/REPORTS option.
3. **SELECT** the CECOR/BASSS VALUES option.

6.14 DEMAND PERFORMANCE CALCULATIONS AND REPORTS [INFORMATION USE] (Continued)

K. **INITIATE** the RCS Leak Rate function as follows:

NOTE

The REACTOR COOLANT SYSTEM LEAK RATE function executes and calculates on demand to evaluate the following performance parameters:

- Computation of the Gross Reactor Coolant System leakage in gallons per minute

The following options may be executed via this function depending on operator input:

- Oldest Time to Previous Time Data Test
- Midnight to Current Hour Data Test
- Midnight to Midnight Data Test
- User Entered Time Test

This function can be executed with a time interval assigned by the software or operator entered. If the data is available in the history file and the current time is after 12 midnight to 6 AM the file is opened for midnight to midnight data, otherwise, if the current time is after 6 AM to midnight, the file is opened for midnight to current hour data. If these times are **NOT** available the following may take place:

- The oldest time entry in the file is displayed as previous time and the most current time is displayed as present time
- If the displayed time interval is **NOT** the desired time interval, the operator may change the previous and present times and dates by typing over the displayed values

1. **SELECT** the PLANT PERFORMANCE function from the MAIN MENU.

2. **SELECT** the DEMAND PERFORMANCE CALCULATIONS/REPORTS option.

3. **SELECT** the RCS LEAK RATE option.

6.14.K DEMAND PERFORMANCE CALCULATIONS AND REPORTS [INFORMATION USE] (Continued)

NOTE

The RCS LEAK RATE screen is displayed. This screen remains displayed after the XMIT below and the ACCEPT/REJECT select points are displayed at the bottom of the screen if all fields have valid data entered. The following information will always be displayed as BLANKS upon first requesting the RCS LEAK RATE function, **AND** must be filled in with information by the operator.

4. **ENTER** data in the fields:

   GALLONS OF LETDOWN DIVERTED PREVIOUS:_____

   GALLONS OF LETDOWN DIVERTED PRESENT:_____

   GALLONS OF MAKEUP TO REFUELING WATER TANK:_____

5. **DEPRESS** <XMIT>.

6. **IF** the default values from the last input are **NOT** satisfactory, **THEN SELECT** the REJECT option to unlock the fields for input.

NOTE

The RCS LEAK RATE screen is re-displayed with the fields below unlocked to allow operator changes.

   a. **ENTER** information in the fields:

      GALLONS OF BORIC ACID:_____

      GALLONS OF DEMINERALIZED WATER:_____

   b. **DEPRESS** <XMIT>.

   c. **SELECT** the ACCEPT option.

7. **IF** the default values from the last input are satisfactory, **THEN SELECT** the ACCEPT option.

6.14 DEMAND PERFORMANCE CALCULATIONS AND REPORTS [INFORMATION USE] (Continued)

L. **PRINT** the Thermal Margin/Low Pressure report on the 45' Utility printer as follows:

NOTE

The THERMAL MARGIN/LOW PRESSURE function executes every two minutes to calculate and evaluate the following items:

- The maximum measured cold leg temperature
- The time rate of change of the average hot leg temperature
- The average temperature difference across the reactor core
- The derivative corrected reactor delta T power (in percent)
- The parameter TCCAL
- The ASI factor
- The CEA factor
- The reactor PVAR trip pressure
- The difference of the two steam generator pressures
- The asymmetric steam generator trip pressure
- Average hot leg temperature

1. **SELECT** the PLANT PERFORMANCE function from the MAIN MENU.

2. **SELECT** the DEMAND PERFORMANCE CALCULATIONS/REPORTS option.

3. **SELECT** the THERMAL MARGIN/LOW PRESSURE option.

6.14 DEMAND PERFORMANCE CALCULATIONS AND REPORTS [INFORMATION USE] (Continued)

M. HYPOTHETICAL PERFORMANCE CALCULATIONS

NOTE

The following functions are available:

- Hypothetical Steam Generator Output
- Hypothetical Turbine/Generator Output
- Hypothetical Reactor Dynamic Thermal Output

These functions read the proper information from the real-time data base with the input being displayed on the requesting device. Using a special editing function the operator may change the input data values for the calculations, without affecting the real-time data base. When using the hypothetical functions, care must be exercised to only enter data that is consistent within itself to properly represent the behavior of the actual physical system; otherwise, misleading results may be displayed.

1. **PERFORM** a Hypothetical Steam Generator Output calculation as follows:

NOTE

The calculations and input data for this hypothetical function are identical to those performed by the periodic functions except for the additional calculation of XAP002#A, and Feedwater Flow.

a. **SELECT** the PLANT PERFORMANCE function from the MAIN MENU.

b. **SELECT** the HYPOTHETICAL PLANT PERFORMANCE CALCULATIONS option.

c. **SELECT** the STEAM GENERATOR OUTPUT option.

d. **TAB** the cursor to the input to be changed.

e. **ENTER** desired value.

f. **REPEAT** as necessary to change all desired inputs on page 1.

NOTE

Depress <XMIT> before use of <PAGE FWD> to save the changes made.

g. **DEPRESS** <XMIT>.

h. **DEPRESS** <PAGE FWD> to obtain page 2.

6.14.M.1 DEMAND PERFORMANCE CALCULATIONS AND REPORTS [INFORMATION USE] (Continued)

i. **TAB** the cursor to the input to be changed.

j. **ENTER** desired value.

k. **REPEAT** as necessary to change all desired inputs on page 2.

l. **SELECT** the PRINT REPORT option at the bottom of the screen.

m. **DEPRESS** <XMIT>.

NOTE

The HYPOTHETICAL STEAM GENERATOR OUTPUT is printed on the Utility printer. The printout consists of 2 pages. The HYPOTHETICAL INPUT DATA DISPLAY FORMAT GENERAL screen remains displayed. The values changed during the previous step show a QUALITY of 'H' and are considered good for the purposes of the calculations.

CAUTION

The calculated values displayed on the CRT do **NOT** change. The new calculated values using the new (entered) data are printed on the Utility printer.

n. **VIEW** the new calculations from the report on the utilities printer.

6.14.M DEMAND PERFORMANCE CALCULATIONS AND REPORTS [INFORMATION USE] (Continued)

2. **PERFORM** a Hypothetical Turbine/Generator Output calculation as follows:

> **NOTE**
> The calculations and input data for this hypothetical function are identical to those performed by the periodic functions.

a. **SELECT** the PLANT PERFORMANCE function from the MAIN MENU.

b. **SELECT** the HYPOTHETICAL PLANT PERFORMANCE CALCULATIONS option.

c. **SELECT** the TURBINE/GENERATOR OUTPUT option.

d. **TAB** the cursor to the parameter to be changed.

e. **ENTER** the desired value.

f. **REPEAT** as necessary to change all desired parameters.

g. **DEPRESS** <XMIT>.

h. **TAB** the cursor to the PRINT REPORT FIELD at the bottom of the screen.

i. **DEPRESS** <XMIT>.

> **NOTE**
> The HYPOTHETICAL TURBINE/GENERATOR OUTPUT is printed on the Utility printer. The printout consists of 2 pages. The HYPOTHETICAL INPUT DATA DISPLAY FORMAT GENERAL screen remains displayed. The values changed during the previous step show a QUALITY of 'H' and are considered good for the purposes of the calculations.

6.14.M DEMAND PERFORMANCE CALCULATIONS AND REPORTS [INFORMATION USE] (Continued)

3. Hypothetical Reactor Dynamic Output

> **NOTE**
> The calculations and input data for this hypothetical function are identical to those performed by the periodic functions.

a. **SELECT** the PLANT PERFORMANCE function from the MAIN MENU.

b. **SELECT** the HYPOTHETICAL PLANT PERFORMANCE CALCULATIONS option.

c. **SELECT** the REACTOR DYNAMIC THERMAL OUTPUT option.

d. **TAB** the cursor to the input to be changed.

e. **ENTER** desired value.

f. **REPEAT** as necessary to change all desired inputs.

g. **DEPRESS** <XMIT>.

h. **TAB** the cursor to the PRINT REPORT FIELD at the bottom of the screen.

i. **DEPRESS** <XMIT>.

> **NOTE**
> The HYPOTHETICAL REACTOR DYNAMIC THERMAL OUTPUT is printed on the Utility printer. The printout consists of 2 pages. The HYPOTHETICAL INPUT DATA DISPLAY FORMAT GENERAL screen remains displayed. The values changed during the previous step show a QUALITY of 'H' and are considered good for the purposes of the calculations.

****** END ******

6.15 EQUIPMENT SERVICE LOG [INFORMATION USE]

NOTE

The Equipment Service Log function provides historical data collection for the operating history of major plant equipment such as: Total run time, number of starts, time and date last stopped, time and date last started, time and date last overhauled and current run time.

A. **UPDATE** the Equipment Installation/Overhaul option as follows:

NOTE

Each piece of equipment is associated with a data base digital point which is scanned once a minute. Equipment START and STOP events are automatically recorded by transitions of these points. As many as 60 points may be defined and maintained for this purpose. The Equipment Installation and Overhaul events are manually recorded by the operator by selecting the Equipment Installation/Overhaul option from the EQUIPMENT SERVICE TASK OPTION MENU.

1. **SELECT** the EQUIPMENT SERVICE LOG option from the MAIN MENU.
2. **SELECT** the EQUIPMENT INSTALLATION/OVERHAUL option.
3. **ENTER** the following:

NOTE

This date and time will be shown on the report as date time of last overhaul.

EQUIPMENT POINT ID : _____

DATE OF EVENT (MM/DD/YY) : _____

TIME OF EVENT (HH:MM:SS) : _____

4. **IF NOT** satisfied with the data,
   THEN SELECT the REJECT option.
   - **INPUT** corrections to the following:

     EQUIPMENT POINT ID : _____

     DATE OF EVENT (MM/DD/YY) : _____

     TIME OF EVENT (HH:MM:SS) : _____
5. **IF** satisfied with the data,
   THEN SELECT the ACCEPT option.

6.15 EQUIPMENT SERVICE LOG [INFORMATION USE] (Continued)

B. **UPDATE** the Point List Maintenance function as follows:

> **NOTE**
> This historical data collection function allows the maintenance of the 60 digital points defined for the recording of the following information:
>
> - Equipment Installation/Overhaul
> - Equipment Starts
> - Equipment Stops

1. **SELECT** the EQUIPMENT SERVICE LOG option from the MAIN MENU.

2. **SELECT** the POINT LIST MAINTENANCE option.

> **NOTE**
> The EQUIPMENT SERVICE POINT LIST screen is displayed. If the output is more than one page, the PAGE FWD key may be used to view all data. The point ID and the Onstate fields are unprotected.

3. **CHANGE** any of the point IDs and Onstate fields.

4. **IF NOT** satisfied with the data,
   THEN SELECT the REJECT option.

5. **IF** satisfied with the data,
   THEN SELECT the ACCEPT option.

C. **PRINT** the Equipment Service Report as follows:

> **NOTE**
> The EQUIPMENT SERVICE REPORT option provides the demand capability to print recorded items on the Utility printer.

1. **SELECT** the EQUIPMENT SERVICE LOG option from the MAIN MENU.

2. **SELECT** the EQUIPMENT SERVICE REPORT option.

****** END ******

6.16 SIGN ON/OFF [INFORMATION USE]

NOTE

- The Sign On/Off function is used to determine the current access level for the CRT: one, two, three, or four. The operator may raise or lower the access level of the CRT. A password of blanks sets the access level to four. Selection of Level 4 constitutes sign off because the menu selections at that level are very restricted. To set the access to any other level, the operator must enter a password.
- The MAIN MENU for the level corresponding to the password is displayed. If the password is invalid, the field is highlighted in reverse video red and an error message is displayed on the RDS message line.

A. **SELECT** the SIGN ON/OFF function from the MAIN MENU.

B. **ENTER** a password or all blanks.

****** END ******

6.17 GOULD SEL-9750 BOOT-STRAP PROCEDURE [CONTINUOUS USE] [B0154]

NOTE

- This section performs a Gould IPL and a SSS ACE warm re-boot. Executing the KILLER program before re-booting prevents corrupting any program that may be running.
- Occasionally, the computer responses may differ from this procedure. If possible, the procedure should be completed to verify successful/unsuccessful reboot prior to contacting Computer Maintenance.
- This warm re-boot procedure is performed at the DIGITAL DECWRITER III printing terminal in the 45'or 72' Computer Room.

A. **IF** the last typed entry on the DIGITAL DECWRITER III printing terminal is the prompt //,
THEN PROCEED to step L.

B. **DEPRESS AND HOLD** <SHIFT> while **TYPING** <@@A>.

C. **DEPRESS** <RETURN>.

- A response of:

  MPX-32 RELEASE NNN BGESYSNN (The N's can be any number/letter)
  TERMINAL SERVICES MANAGER
  (C) COPYRIGHT 1983, GOULD INC., COMPUTER SERVICES DIVISION.
  ALL RIGHTS RESERVED. ENTER YOUR OWNERNAME:

  is typed by the computer.

D. **IF** the response above is **NOT** typed,
THEN GO TO step J.

E. **TYPE** <Guest1>.

F. **DEPRESS** <RETURN>.

- A response of:

  ENTER KEY

  is typed by the computer.

6.17 GOULD SEL-9750 BOOT-STRAP PROCEDURE [CONTINUOUS USE] [B0154] (Continued)

G. **DEPRESS** <RETURN>.

1. A response of:

UNABLE TO ESTABLISH DEFAULT WORKING DIRECTORY.
YOUR CURRENT WORKING DIRECTORY IS @SYSTEM (SYSTEM)
$OPTI NOCO
DATE TIME

```
*********************************************
*                CALVERT CLIFFS             *
*             NUCLEAR POWER PLANT           *
*           UNIT 1(2) PLANT COMPUTER        *
*********************************************
```

TSM>

is typed by the computer.

H. **TYPE** <KILLER.C>.

I. **DEPRESS** <RETURN>.

- A TSM> prompt is typed by the computer
- Approximately five seconds later a list of abort messages will be printed (3/4 of a page)

> **NOTE**
> If a typing error is made in subsequent steps, the operator may return to this step to restart the boot-strap procedure.

J. **DEPRESS AND HOLD** <SHIFT> while **TYPING** <@@P>.

K. **DEPRESS** <RETURN>.

- The // prompt is typed by the computer.

L. **TYPE** <HALT>.

M. **DEPRESS** <RETURN>.

N. **TYPE** <GPR>.

6.17 GOULD SEL-9750 BOOT-STRAP PROCEDURE [CONTINUOUS USE] [B0154] (Continued)

O. **DEPRESS** <RETURN>.

- Eight groups of eight numbers/letters is typed by the computer, followed by //

  ******** ******** ******** ******** ******** ******** NNNNNNNN ********
  //

- Note the seventh group of numbers/letters, NNNNNNNN (The N's can be any number/letter).

P. **IF** the above response is **NOT** typed,
THEN go to step W

Q. **TYPE** <MA=NNNNNNNN> (Where NNNNNNNN is the seventh group of numbers/letters in step O above.)

R. **DEPRESS** <RETURN> at least 8 times.

- The computer will type a line each time <RETURN> is depressed.

S. **TYPE** <MA=8E8>.

T. **DEPRESS** <RETURN>.

- A response of:

  MA 000008E8 MD NNNNNNNN INT HALT
  //

  is typed by the computer (The N's can be any number/letter).

- Note the numbers/letters NNNNNNNN after MD.

U. **TYPE** <MA=NNNNNNNN> (Where NNNNNNNN is the numbers/letters between MD and INT in step T above.)

V. **DEPRESS** <RETURN> at least 13 times.

- The computer will type a line each time <RETURN> is depressed.

W. **TYPE** <HALT>.

X. **DEPRESS** <RETURN>.

- A response of:

  PSW NNNNNNNN INST NNNNNNNN HALT
  //

  is typed by the computer (The N's can be any number/letter)

6.17 GOULD SEL-9750 BOOT-STRAP PROCEDURE [CONTINUOUS USE] [B0154] (Continued)

Y. **TYPE** <RST>.

Z. **DEPRESS** <RETURN>.

- A response of:

  PSW 80000000 INST 00000000
  //

  is typed by the computer.

AA. **TYPE** <CLE>.

AB. **DEPRESS** <RETURN>.

- A blank line followed by // is typed by the computer.

AC. **TYPE** <RST>.

AD. **DEPRESS** <RETURN>.

- A response of:

  PSW 80000000 INST 00000000 HALT
  //

  is typed by the computer.

NOTE When entering 0 into the computer, 0 are zero's.

AE. **TYPE** <IPL=0800>.

AF. **DEPRESS** <RETURN>.

- A response of:

  00000000 00000000 RUN

  is typed by the computer. No further action is required.

6.17 GOULD SEL-9750 BOOT-STRAP PROCEDURE [CONTINUOUS USE] [B0154] (Continued)

NOTE

The re-boot is successful when the following message is typed on the printing terminal by the computer:

ACE START COMPLETED

The above action could take up 5 minutes.

AG. **IF** the re-boot of the Plant Computer is successful,
THEN RESTORE the following Plant Computer functions:
(as applicable)

- 1(2)C05 Power indications
  - 1-XI-5515
  - 2-XI-5515
- Trend Blocks
- Feedwater Flow Correction Factors
  - PTF1100, 11/21 FW Flow Correction Factor
  - PTF1200, 12/22 FW Flow Correction Factor

****** END ******

6.18 VIEWING THE 1/M PROGRAM [INFORMATION USE]

NOTE

The Base Count Rate must be updated whenever starting the 1/M Program **OR** when the source of positive reactivity addition is changed (i.e., from dilution to CEAs).

A. **UPDATE** the base count rate as follows:

1. **SELECT** the CORE PHYSICS option from the MAIN MENU.

2. **SELECT** the 1/M option from the CORE PHYSICS MENU.

NOTE

The 1/M screen provides the following for each of the four RPS channels:

- Count rate
- 16 min. average count rate
- 1/M Calculation
- Base Count Rate

AND

- An average of the four 1/M Calculations

3. **TAB** the cursor to the UPDATE BASE COUNT RATE field.

4. **DEPRESS** <XMIT>.

5. **DEPRESS** <MAIN MENU>.

6.18 VIEWING THE 1/M PROGRAM [INFORMATION USE] (Continued)

B. **VIEW** the 1/M Plot as follows:

1. **SELECT** the TRENDING option from the MAIN MENU.
2. **SELECT** the REAL TIME VIDEO TREND option from the TRENDING MENU.
3. **ENTER** a two second update frequency.
4. **TAB** to the TREND POSITION 1 field.
5. **ENTER** the following data:

	POINT IDENTIFIER	MINIMUM	MAXIMUM
TREND POSITION 1	NRQAVG1M	.75	1.00
TREND POSITION 2	NRQAVG1M	.50	.75
TREND POSITION 3	NRQAVG1M	.25	.50
TREND POSITION 4	NRQAVG1M	0.00	.25

6. **DEPRESS** <XMIT>.
7. **IF** the above data was entered correctly, **THEN DEPRESS** <XMIT>.

NOTE

There is no need to exit from this option due to changes in reactivity source, as the base count rate can be updated from another terminal while viewing the 1/M plot on this terminal.

****** END ******

6.19 SELECTED COMPUTER POINT ANNUNCIATOR [INFORMATION USE]

NOTE

- Up to 80 Points may be assigned to Groups 165 and 265. Each of these will cause the 1C06(2C06) "SELECTED COMPUTER POINT" annunciator to alarm if an Analog Point's Critical Hi or Critical Lo limit is reached or if a Digital Point is in an abnormal state.
- Analog point alarm limits and digital point states are modified **PER** this procedure, section titled: POINT MODIFY.

A. **ASSIGN OR DELETE** Points to Groups 165 and 265 as follows:

1. **ENSURE** applicable requirements of ATTACHMENT 1, REMOVAL OF AN ALARM POINT FROM SERVICE / CHANGING COMPUTER ALARM LIMITS. are implemented for Point IDs taken out of service or whose alarm limits are modified.
2. **SELECT** the GROUP FUNCTION from the MAIN MENU.
3. **SELECT** the EDIT GROUP function from the GROUP TASK OPTION MENU.
4. **DEPRESS** <PAGE FWD> and <PAGE BACK> as necessary to find the page containing Group 165 or 265.
5. **SELECT** Group 165 or 265.
6. **MAKE** any of the following changes:
   a. **ENTER** blanks over the displayed point ID to delete an existing point, group name or master point ID.
   b. **ENTER** the ID in the blank fields to add a point ID, group name or master point.
   c. **ENTER** a new point ID group name or master point over an existing one to change a point ID group name or master point.
   d. **WHEN** all desired changes have been entered **THEN DEPRESS** <XMIT>.

NOTE

Page 1 of the VALIDATE GROUP DISPLAY is displayed, with the changes shown.

7. **DEPRESS** <PAGE FWD>. (Page 2 of the VALIDATE GROUP DISPLAY is displayed)
8. **IF** the additions or changes are satisfactory, **THEN SELECT** the ACCEPT option.

6.19.A SELECTED COMPUTER POINT ANNUNCIATOR [INFORMATION USE] (Continued)

9. **IF** the additions or changes are **NOT** satisfactory, **THEN SELECT** the REJECT option:

   - The EDIT GROUP DISPLAY is re-displayed and all previous changes made are displayed

   - **MAKE** changes as described above

B. **ACKNOWLEDGE** Points in alarm **AND RESET** the 1C06(2C06) "SELECTED COMPUTER POINT" annunciator as follows:

1. **ACKNOWLEDGE** Points in alarm assigned to Groups 165 and 265, using the Point Acknowledge Function Key as follows:

   a. **SELECT** the ALARM DISPLAY function from the MAIN MENU.

   b. **SELECT** either option.

   c. **POSITION** the cursor on any white Point ID assigned to Group 165 or 265, on the ALARM screen.

   d. **DEPRESS** <ALARM POINT ACKN>.

2. **ACKNOWLEDGE** Points in alarm assigned to Groups 165 and 265, using the Page Acknowledge Function Key as follows:

   a. **SELECT** the ALARM DISPLAY function from the MAIN MENU.

   b. **SELECT** either option.

   c. **DEPRESS** <ALARM PAGE ACKN>.

****** END ******

6.20 MODIFYING FEEDWATER CORRECTION FACTORS [REFERENCE USE]

A. Initial Conditions

1. LEFM CheckPlus system is installed.

B. Performance

NOTE
Data recorded in this section of the procedure is for information only during the performance of the procedure. Record retention is **NOT** required. 00701

1. **SELECT** CORE POWER PARAMETERS from the MAIN MENU. 00701
2. **IF** Reactor power is greater than or equal to 90%, **THEN PERFORM** the following: 00701

CAUTION
- The Auto Correction Factor may only be used if the LEFM CheckPlus system is operable. 00701
- The plant should be in a steady state condition for at least one hour when evaluating the new Manual Feedwater Correction Factor using the Auto Correction Factor.

a. **DETERMINE** the new Manual Feedwater Correction Factor by reviewing the following: 00701

- As directed by another Procedure

OR

- Auto Correction Factor 00701

OR

- The System Engineer has conducted an evaluation of the plant status **AND** has determined appropriate Feedwater Correction Factor. 00701

6.20.B.2 Performance (Continued)

NOTE

- A value of 1.00000 will null the correction factor.
- To eliminate the need to round values, enter the Feedwater Correction Factor to at least the hundred-thousandth (5 digits after the decimal).

00701

b. **RECORD** the new Manual Feedwater Correction Factor determined in Step 2.a: 00701

_____

NOTE

Voicemail notification is acceptable. 00701

c. **IF** the new Manual Correction Factor as derived from the Auto Correction Factor is outside the following values, 00701
THEN NOTIFY the System Engineer.

- Unit-1:
  - Maximum: 1.00115
  - Minimum: 1.00005
- Unit-2:
  - Maximum: 1.00159
  - Minimum: 1.00094

6.20.B.2 Performance (Continued)

d. **DETERMINE** the need to change the Manual Correction Factor: 00701

- Unit-1:

  (1) **IF** the new Manual Correction Factor as derived from the Auto Correction Factor is **GREATER** than 1.00115, **THEN** the Flow Correction Factor will need to be changed to the new value.

  (2) **IF** the new Manual Correction Factor as derived from the Auto Correction Factor is **LESS** than 1.00115, **THEN** the Flow Correction Factor will need to be set at 1.00115.

- Unit-2:

  (1) **IF** the new Manual Correction Factor as derived from the Auto Correction Factor is **GREATER** than 1.00159, **THEN** the Flow Correction Factor will need to be changed to the new value.

  (2) **IF** the new Manual Correction Factor as derived from the Auto Correction Factor is **LESS** than 1.00159, **THEN** the Flow Correction Factor will need to be set at 1.00159.

3. **IF** Reactor power is less than 90%, **THEN ENSURE** the Plant Computer point PAVFTKB, PA911VFT MANUAL CORRECTION FACTOR is set at: 00701

   - Unit-1: 1.00115
   - Unit-2: 1.00159

6.20.B Performance (Continued)

4. **IF** desired to change the Manual Correction Factor, **THEN PERFORM** the following: 00701

CAUTION

If the Manual Correction Factor is active, changes to the factor will affect indicated Reactor Thermal Power. 00701

- Setting the Manual Correction Factor higher will raise indicated Reactor Thermal Power.

a. **IF** PA911VFT is active, **AND** the Manual Correction Factor is active, **THEN EVALUATE** the need to reduce Reactor Power to prevent exceeding limits when the change is entered. 00701

(1) **CALCULATE** the estimated power change due to Manual Correction Factor changes:

100% x ($PAVFTKB_{NEW}$ - $PAVFTKB_{OLD}$) = delta % power

100% x (_____ - _____) = _____ % power

(2) **CONVERT** % power to MWth:

_____ % power x 27.37 MWth/% power = _____ MWth

(3) **INDEPENDENTLY VERIFY** the calculations.

b. **ENSURE** Reactor Power will support changing the Manual Correction Factor.

c. **MODIFY** computer point PAVFTKB as needed **PER** Section, 6.11, POINT PROCESSING, Subsection B., Point Modify.

NOTE

Value may vary ± .00001 of actual value entered. 00701

d. **INDEPENDENTLY VERIFY** that the correct value has been properly entered into the Plant Computer. 00701

5. **IF** Reactor power is greater than or equal to 90%, **AND** the Auto Correction Factor was **NOT** used in Step 2.b, **THEN LOG** that PA911VFT can **NOT** be used above 2700MWth, due to Plant Computer point PAVFTKB was **NOT** set using the Auto Correction Factor. 00701

6.20.B Performance (Continued)

NOTE
Until adequate operating experience has been obtained, the Manual Feedwater Correction Factor is preferred to minimize indicated power shifts. 00701

6. **IF** desired to shift between the Manual and Auto Feedwater Correction Factors, **THEN**, on the REACTOR CORE POWER PARAMETERS ASSIGNMENT menu, **PERFORM** the following: 00701

   a. **SELECT** the desired Correction Factor.

   b. **DEPRESS** <XMIT>.

   c. **INDEPENDENTLY VERIFY** the desired Correction Factor is active.

7. **IF**, following a correction factor change, the difference between calculated thermal power and RPS NI power exceeds the allowable limits of OI-30, NUCLEAR INSTRUMENTATION, 00701
   THEN PERFORM an NI Calibration **PER** OI-30, NUCLEAR INSTRUMENTATION.

****** END ******

6.21 SHIFT INPUTS TO THERMAL POWER CALORIMETRICS [REFERENCE USE]

A. Precautions

1. Limitations for use of the Thermal Power Calorimetric inputs:

   - PA911C may be used at all Reactor Power levels, **AND** is the preferred input for all Reactor Power levels.

   - PA911VFT may be used at any time when Reactor Power is less than or equal to 2700 MWth. It may be used above 2700 MWth only during the TRM 15.3.6 Restoration Time.

   - PA911VU may be used only when Reactor Power is less than or equal to 2700 MWth. It is preferred that PA911VU only be used if PA911C and PA911VFT are **NOT** available.

B. Performance

1. **EVALUATE** the need to reduce Reactor Power to prevent exceeding limits.

2. Prior to shifting to PA911VFT or PA911VU from PA911C, **PERFORM** the following:

   a. **CHECK** the following computer points are updating properly:

      - F1111
      - F1121
      - P4490
      - P4495
      - T4516
      - T4517
      - S3967 (Unit-1 only)
      - S3975 (Unit-1 only)
      - S8002 (Unit-2 only)
      - S8042 (Unit-2 only)

6.21.B.2 Performance (Continued)

NOTE
Plant Computer Group 087 is reserved for the constants used in PA911, 2 Minute Average Reactor Thermal Output, which is used to generate PA912, 16 Minute Average Reactor Thermal Output.

b. **CHECK** the values of the following Plant Computer constants match the Plant Setpoint File,system #94:

Point ID	Point Description
FDK1132	11(21) Feedwater Flow Const1
FDK1096	11(21) Feedwater Flow Const2
FDK1128	12(22) Feedwater Flow Const1
FDK1130	12(22) Feedwater Flow Const2

3. Prior to shifting to PA911C, **CHECK** the following computer points are updating properly:

- Unit-1:
  - FWL11FLO
  - FWL12FLO
  - FWL11PRE
  - FWL12PRE
  - FWL11TMP
  - FWL12TMP
- Unit-2:
  - FWL21FLO
  - FWL22FLO
  - FWL21PRE
  - FWL22PRE
  - FWL21TMP
  - FWL22TMP

4. **SELECT** CORE POWER PARAMETERS from the MAIN MENU.

5. **SELECT** the desired input to the Thermal Power Calorimetrics:

- PA911C, 2 MIN AVG RX THERMAL OUTPUT CALDON ULT
- PA911VFT, 2 MIN AVG RX THERMAL OUTPUT VENTURI F&
- PA911VU, 2 MIN AVG RX THERMAL OUTPUT VENTURI UN

6. **DEPRESS** <XMIT>.

6.21.B Performance (Continued)

7. **INDEPENDENTLY VERIFY** the desired input to the Thermal Power Calorimetrics is active.

****** END ******

7.0 POST-PERFORMANCE ACTIVITIES

Upon completion of attachments, forward the original(s) to the Operations Clerk for retention **PER** CNG-PR-3.01-1000, Records Management.

8.0 BASES

[B0154] AOP-7H directs the operator to attempt a BOOT-STRAP procedure on the Plant Computer should it be lost in Mode 1 or 2.

[B0577] POSRC OI 90-163-04.

[B0840] SOER 02-3, Large Power Transformer Reliability, Rec. 3.b.4, appropriate compensatory monitoring practices when alarms are OOS or sealed in for other reasons.

9.0 RECORDS

A. Records generated by this procedure shall be transferred to Records Management **PER** CNG-PR-3.01-1000, Records Management.

10.0 ATTACHMENTS

A. TABLE 1, POINT ID INFORMATION.

B. TABLE 2, SPECIAL ENDING CHARACTERS.

C. TABLE 3, SPECIAL BEGINNING CHARACTERS.

D. TABLE 4, DEDICATED FUNCTION KEYS.

E. ATTACHMENT 1, REMOVAL OF AN ALARM POINT FROM SERVICE / CHANGING COMPUTER ALARM LIMITS.

F. ATTACHMENT 2, COMPUTER POINTS REMOVED FROM SCAN LOG.

G. ATTACHMENT 3, COMPUTER ALARMS MADE INACTIVE LOG. **[B0577]**

H. ATTACHMENT 4, ALARM LIMITS LOG.

POINT ID INFORMATION

A. **CONVERTING** transmitter signal Point IDs to usable Point IDs:

Plant signals are received by the computer exactly as sent by the transmitter. However, some sensors do **NOT** send a value that is directly useable by a person. Therefore, some kind of additional conversion is required. Example:

PROCESS RAD MONITOR: In this case, the transmitter sends a signal which is the log (base 10) of the actual reading. This means that the computer reads 2 **NOT** 100 for a value. The point ID for the raw reading is R5202. But this point could have a value such as 2.13 LOG KCPM. To get the actual reading, point ID R5202! should be used, in this case a value of 134.9 KCPM.

To help in deciding which point ID to use, check the units field and the last character of the ID. TABLE 2 contains a list of the special ending characters and their meaning.

B. Computer Calculated Points:

The first two characters of Computer Calculated Points define which computer unit is responsible for the calculation. TABLE 3 contains a list of the special beginning characters and the unit to which they are assigned.

SPECIAL ENDING CHARACTERS

CHARACTER(S)	MEANING
&M	Two minute sum
&S	Hourly sum
#A	Two minute average
#B	Ten minute average
#H	Hourly average
!	Exponential (raise 10 to the power)
!A	Exponential two minute average
!H	Exponential hourly average
!S	Exponential hourly sum
$H	Peak reading for the hour
%	Convert PSID to flow
%A	Convert PSID to flow two minute average
%H	Convert PSID to flow hourly average
%S	Convert PSID to flow hourly sum
"	Miscellaneous correction
"A	Miscellaneous correction two minute average
"H	Miscellaneous correction hourly average
"S	Miscellaneous correction hourly sum

SPECIAL BEGINNING CHARACTERS

CHARACTER(S)	ASSIGNED UNIT
AI	Average and integrate
AZ	Azimuthal flux tilt (**NOT** Tq)
BA	BASSS
CD	CEA data logger (RODDAT)
CE	CECOR
CI	CEA insertion accounting
CR	CEA monitoring and alarming
CW	Main condenser cooling water monitoring
EC	ASI (computer duplicating RPS)
ES	Pump monitoring
FD	Fluid density correction
IN	INCA
PA	Steam generator output
PB	Turbine generator output
PC	Thermal margin/low pressure
PD	PDIL and PPDIL
PE	Reactor dynamic thermal output
PF	Drain cooler
PG	Condenser performance
PH	Heater terminal difference
PI	Feed pumps and turbines
PJ	RCS leak rate
PK	RCS flow
PT	S/G feed water flow
SP	SPDS
TB	Turbine rate of change
XAP	Special average of several different pressures
XAT	Special average of several different temperatures
XD	Incore detectors
XE	Xenon
XV	Miscellaneous calculated values
XVF	Flow calculations
XVK	Miscellaneous calculated values
XVL	Level calculations
XVT	Temperature calculations

DEDICATED FUNCTION KEYS

KEY	FUNCTION
XMIT	The XMIT key is used to transmit messages from the keyboard to the computer. By itself, the key serves no function and must be used when selecting a function or entering data. In cases where multiple entries are to be made on one page, the operator may elect **NOT** to DEPRESS <XMIT> until the last entry in that page has been completed. However, <XMIT> must be pressed before leaving that page or the data entered will be lost.
ABORT	<ABORT> may be used to exit the present application or menu. The current application or menu is exited and the previously selected menu is displayed.
PAGE FWD PAGE BACK	<PAGE FWD> or <PAGE BACK> can be used to view additional pages of a menu or application if it is a multiple page function.
PAGE RIGHT PAGE LEFT	<PAGE RIGHT> **AND** <PAGE LEFT> are functional when the CONTINUOUS VIDEO TREND ACTIVATION function has been selected. <PAGE RIGHT> is also functional when the HISTORICAL VIDEO TREND function has been selected. When the CONTINUOUS VIDEO TREND ACTIVATION function is selected, the most recent data is displayed and the display is updated with the current real-time data. To view previous data (stored) depress <PAGE LEFT>. The previous page of data for the first four points is retrieved from the VIDEO TREND HISTORICAL file. Unlike the screen with the most recent data, there are no dynamic updates of this screen with data from the real time data base. To view more current data, depress <PAGE RIGHT>. The next page of data for the same four points is displayed. If the new page is the page containing the most recent data, the screen will start to update using data from the real-time data base.
MAIN MENU	<MAIN MENU> may be used to exit the current menu or application and return the display to the MAIN MENU.
SPDS	<SPDS> allows the operator to select the SPDS function directly without going through the MAIN MENU. The SPDS Application is selected and the first page of the PLANT OPERATING SUMMARY function is displayed.

DEDICATED FUNCTION KEYS

KEY	FUNCTION
FREEZE SCREEN/ CRT HARD COPY	These functions are used in conjunction with each other to make a copy of the current display on the Tektronix copier. Depress <FREEZE SCREEN> then depress <CRT HARD COPY> and a copy of the display is made on the Tektronix copier.

NOTE

Dynamic Function Keys are keys whose function can be configured or modified by the operator through the use of the Assign Function Key. These keys have the numbers 1 through 27 imprinted on them.

KEY	FUNCTION
ASSIGN FUNCTION	This function allows the operator to manually assign and reassign system functions to specific dynamic function keys on a one time basis to circumvent menu processing during operations. The Assign Function Key function allows the assignment of a currently active application to a dynamic function key. Assignments and reassignments are unique to the requesting CRT. Also, dynamic key changes are preserved during a warm system restart, but are lost and must be reassigned after a cold start. Activate the application to be assigned to a function key. Depress <ASSIGN FUNC KEY>. The operator must select a dynamic function key to which the application is to be assigned. If another application has been previously assigned to this key, it will be replaced by the new application. Depress the desired dynamic function key.
GROUP DISPLAY	<GROUP DISPL> allows the selection of the GROUP DISPLAY function directly by circumventing the menus. The operator selects one of the 280 groups from a group menu, and the Group Display shows dynamic and static point information for all of the slave points associated with a group point. Each group point contains up to 40 possible slave points. The static information consists of the point ID, description, and engineering units name, if applicable. The dynamic information consists of the current engineering units value or the state of the point, depending on point type (analog or digital). This information is updated every five seconds. Depress <GROUP DISPL>. Using <PAGE FWD> and <PAGE BACK>, page through the list of groups to find the one desired. Select the desired group. Page forward or backward using <PAGE FWD> and <PAGE BACK> as necessary to view all the pages.

DEDICATED FUNCTION KEYS

KEY	FUNCTION
POINT DISPLAY	<POINT DISPL> allows the selection of the POINT DISPLAY function directly by circumventing the menus. Depress <POINT DISPL> and enter a point ID.
POINT DELETE	<POINT DELETE> allows the selection of the POINT DELETE function direction directly by circumventing the menus.
POINT RESTORE	<POINT RESTORE> allows the selection of the POINT RESTORE function directly by circumventing the menus.
ALARM POINT ACKNOWLEDGE	<ALARM POINT ACKN> is utilized to acknowledge points in alarm. On the CRT keyboard, select the ALARM DISPLAY function from the MAIN MENU. Position the cursor to any white alarm on the ALARM screen, and depress <ALARM POINT ACKN>. This will also reset the 1C06(2C06) "SELECTED COMPUTER POINT" annunciator if the point in alarm is assigned to Group 165 or 265.
ALARM PAGE ACKNOWLEDGE	<ALARM PAGE ACKN> is used to acknowledge all of the alarms on the currently displayed alarm page which have **NOT** been previously acknowledged (white, flashing IDs). This will also reset the 1C06(2C06) "SELECTED COMPUTER POINT" annunciator if the point in alarm is assigned to Group 165 or 265.
ALARM MESSAGE DELETE	<ALARM MESSAGE DELETE> function provides the capability to selectively delete messages from the alarm display. The operator positions the cursor to note the line selected for deletion on the display and depresses <ALARM MESSAGE DELETE>. The line is removed from the display and the display is repacked. As long as the alarm does **NOT** change state, it is **NOT** displayed. On a change of state, normal alarm processing takes place and the alarm is re-displayed.
ALARM CLEAR ACKNOWLEDGE	<ALARM CLEAR ACKNOWLEDGE> is used to acknowledge all alarms that are in a RETURN TO NORMAL condition (Green).

REMOVAL OF AN ALARM POINT FROM SERVICE / CHANGING COMPUTER ALARM LIMITS.

A. The operator requesting the removal of a computer alarm point from service, or changing a computer alarm limit shall:

   1. Complete all blocks in the appropriate log (ATTACHMENT 2 through ATTACHMENT 4) up to, but not including, the authorization block.

B. Affected computer users shall identify available group displays applicable to the shift or organization, based on any coordinating instructions provided by the system expert, which may be affected by the requested alarm change.

   1. Plant computer users are authorized to change group displays assigned to their shift or organization, based on any coordinating instruction provided by the system expert. If any points are changed in the first forty groups, contact ISD first for assistance in assessing system impact.

C. All completed requests (ATTACHMENT 2 through ATTACHMENT 4) shall be forwarded to the CRS for review and approval.

D. For authorization to remove a computer alarm point from service, or change a computer alarm limit, the CRS shall:

   1. Review the requested removal of a computer alarm point, or change of a computer alarm limit, to ensure:

      a. The request is necessary.

      b. The request does not place the plant or equipment in jeopardy.

      c. The request does not unnecessarily affect other indicators, equipment, or computer calculations.

      d. The requirements for compensatory actions can be completed if an annunciator is affected or placed out of service. **[B0840]**

      e. Appropriate corrective action can be taken, if necessary.

   2. Initial the authorization block on the appropriate attachment when satisfied with the action to be taken to remove the computer alarm point from service, or to change the computer alarm limit.

   3. Return the request to the operator.

REMOVAL OF AN ALARM POINT FROM SERVICE / CHANGING COMPUTER ALARM LIMITS.

E. The operator shall:

1. If an alarm annunciator meets the criteria of CNG-OP-1.01-2003, then complete CNG-OP-1.01-2003 attachment titled ALARM ANNUNCIATOR/RECORDER POINT OUT OF SERVICE LOG.

2. For all others, complete the applicable ATTACHMENT 2 through ATTACHMENT 4.

3. If a computer point is found off scan, then inform the CRS and place it in service, as required.

F. If an ATTACHMENT 2 through ATTACHMENT 4 is applicable, the operator shall:

1. Complete the appropriate log actions.

2. Verify completion of the proper steps.

3. Initial the proper block.

G. Items that are addressed on ATTACHMENT 2 through ATTACHMENT 4 are restored as follows:

1. The operator shall:

   a. Return the equipment to its original state.

   b. Perform an annunciator alarm test, if applicable.

   c. Complete the appropriate blocks on the appropriate Attachment.

   d. If an alarm annunciator meets the criteria of CNG-OP-1.01-2003, then complete CNG-OP-1.01-2003 attachment titled ALARM ANNUNCIATOR/RECORDER POINT OUT OF SERVICE LOG.

2. The CRS shall review the appropriate Attachment for:

   a. Completeness, and

   b. Acknowledgement of restoration.

3. The CRS shall initial the appropriate Attachment when satisfied the above actions have been completed.

PLANT COMPUTER

COMPUTER POINTS REMOVED FROM SCAN LOG

UNIT _____

DATE	POINT IDENT	POINT DESCRIPTION	REASON TO DELETE FROM SCAN	CRS (1) AUTH (INIT)	DELETED BY (INIT)	DATE RETURNED TO SCAN	RETURNED BY (INIT)	CRS (1) REVIEW (INIT)

NOTES:

1. Ensure Shift Manager is notified and concurs within same shift.
2. This log is to be maintained at the CRO's desk.
3. Forward completed Log Sheet to the GS - NPO.

COMPUTER ALARMS MADE INACTIVE LOG [B0577]

UNIT _____

DATE	POINT IDENT	POINT DESCRIPTION	REASON TO MAKE POINT INACTIVE	CRS AUTH (INIT)	MADE INACTIVE BY (INIT)	DATE ACTIVATED	ACTIVATED BY (INIT)	CRS REVIEW (INIT)

NOTES:
1. This log is to be maintained at the CRO's desk.
2. Forward completed log sheets to the GS - NPO.

PLANT COMPUTER

ALARM LIMITS LOG

UNIT _____

DATE	POINT IDENT	POINT DESC.	REASON FOR CHANGING LIMIT(S)	PERMANENT LIMIT(S)	NEW TEMPORARY LIMIT(S)	CRS AUTH (INIT)	CHANGED BY (INIT)	DATE RESTORED TO PERM LIMIT(S) (3)	RETURNED BY (INIT)	CRS RVW (INIT)

(3) If the limit(s) are being changed to a new permanent limit, date the restored column with the same date as the first column and write "perm" in this column. Otherwise "restore" means limit(s) have been returned to the permanent limit(s) value.

- This log is to be maintained at the CRO's desk and additional copies of page 1 may be used as necessary.

- Points listed in the Setpoint File shall not be logged on this sheet; they must be controlled according to EN-1-100. It is important to understand that both the Plant Computer Setpoint File **AND** the applicable system Setpoint File must be checked to ensure the point is not listed in **EITHER** Setpoint File prior to using this sheet. For example; a point that is a 'Control Rod Drive Mechanism' type point must be checked for in both the 'Plant Computer Setpoint File' (System 94) **AND** the 'Control Rod Drive Mechanism' Setpoint File (System 55). Failure to perform this check properly could lead to the misuse of this sheet and plant control problems.

- If the limit(s) are being changed to a new permanent limit, date the restored column with the same date as the first column and write "perm" in this column. Otherwise, "restore" means limit(s) have been returned to the permanent limit(s) value.

- Forward completed Log Sheets to the GS - SO.

- The following points are exempt from being logged when their limits change:

  - R4014! Stm Gen Blowdown Activity
  - RI4095! SG Blowdown IX
  - R2201! Liquid Waste Discharge Activity
  - R2191! Waste Gas Discharge Activity
  - P103, P103A, and P103#A Pressurizer Pressure
  - R5415A! and R5415B! Main Vent Gaseous Activity
  - L206 BAST Level
  - L208 BAST Level
  - L4279 RCWRT #11 Level
  - L4281 RCWRT #12 Level
  - L4286 RCWMT #11 Level
  - L4288 RCWMT #12 Level
  - L2195 Misc Waste RCVR Tank Level
  - L2197 Misc Waste Monitor Tank Level
  - P2188 Waste Gas Decay Tank 11 Press
  - P2189 Waste Gas Decay Tank 12 Press
  - P2190 Waste Gas Decay Tank 13 Press
  - R5202! Process Rad Monitor

**THIS DOCUMENT IS FOR INSTRUCTION AND INFORMATION ONLY.
IT IS NOT TO BE USED FOR PLANT OPERATIONS.**

RADIATION MONITORING SYSTEM

SYSTEM DESCRIPTION
NO. 77/79
REVISION 5

Calvert Cliffs Nuclear Power Plant

Prepared By: E.R. Kreahling ER Kreahling System Manager Date: 8/13/09

Approved By: H G Beasley HG Beasley Engineering Supervisor Date: 8/13/09

PLEASE DIRECT TO THE SUPERVISOR-OPERATIONS TRAINING OR SYSTEM ENGINEER, ANY RECOMMENDATIONS FOR IMPROVEMENTS TO THIS SYSTEM DESCRIPTION.

TABLE OF CONTENTS

1.0 PURPOSE 1

2.0 GENERAL DESCRIPTION 1
- 2.1 Area Radiation Monitoring System 1
- 2.2 Process Radiation Monitoring System 1

3.0 DETAILED DESCRIPTION 1
- 3.1 Area Radiation Monitoring System 1
  - 3.1.1 Containment Area Radiation Monitors 2
  - 3.1.2 Containment High Range Gamma Monitors 3
- 3.2 Process Radiation Monitoring System 3
  - 3.2.1 Plant Main Vent Monitor System 3
  - 3.2.3 Containment Atmosphere Monitor System 8
  - 3.2.4 Waste Gas Discharge Monitor 9
  - 3.2.5 Liquid Waste Processing Discharge Monitor 10
  - 3.2.6 Condenser Air Removal Discharge Monitors 11
  - 3.2.7 Component Cooling System Radiation Monitors 11
  - 3.2.8 Service Water System Radiation Monitors 12
  - 3.2.9 Steam Generator Blowdown Tank Discharge Monitor 12
  - 3.2.10 Steam Generator Blowdown Recovery Monitor 13
  - 3.2.11 Air Monitors 14
  - 3.2.12 Main Steam Effluent Radiation Monitor System 15

4.0 GENERAL SYSTEM OPERATION 17
- 4.1 Theory Behind System Design 17
- 4.2 Operating Procedures 18
- 4.3 Radiological Event/Radioactivity Release 18

5.0 SYSTEM SUMMERY TABLES 19
- Table 5-1 Area Radiation Monitor Detector Locations 19
- Table 5-2 Containment Area Radiation Monitor Locations 19
- Table 5-3 Process and Effluent Radiation Monitors 20
- Table 5-4 Atmosphere Monitors 20
- Table 5-5 Control Room Panel IC22 Radiation Monitor Layout 21
- Table 5-6 Control Room Panel IC22 Radiation Monitor Layout 22
- Table 5-7 Control Room Panel 2C24B Radiation Monitor Layout (left side) 23
- Table 5-8 Control Room Panel 2C24B Radiation Monitor Layout (right side) 24

6.0 REFERENCES 25

1.0 PURPOSE

The purposes of the Radiation Monitoring System are:

- to warn plant personnel of increasing radiation levels in selected plant areas;
- to provide early warning of a plant malfunction which may result in a radiation hazard or plant damage; and
- to assure that releases of radioactive effluents from the plant do not exceed allowable limits in accordance with Part 20 of Title 10 of the Code of Federal Regulations (10 CFR 20), are monitored in accordance with criterion 64 of Appendix A to Part 50 of Title 10 of the Code of Federal Regulations (10 CFR 50), and are maintained ALARA in accordance with the requirements of Appendix I to 10 CFR 50.

2.0 GENERAL DESCRIPTION

2.1 Area Radiation Monitoring System

The Area Radiation Monitoring System reads and records gamma radiation levels in selected areas throughout the plant and alarms (audible and visual) if these levels exceed a preset value or if the detector malfunctions. Area radiation monitors are located throughout the plant. Four low range and two high range area monitors are located in each containment (refer to Tables 5-1 and 5-2). Each area radiation monitor provides indications and alarms in the Control Room and at its station location, and can be checked with a test source to verify proper operation.

2.1.1 Containment Area Radiation Monitors

The low range containment area monitors are the sensors for the Containment Radiation Signal sub-system of ESFAS (CRS). The CRS is limits releases from a fuel handling accident inside containment. Each of the four monitors provides the analog input to the CRS bi-stables. The containment area radiation monitors are listed in Table 5-2.

2.1.2 Containment High Range Gamma Monitors

Redundant high range (10^8 R/hr) gamma detectors have been installed in each unit's containment to provide the ability to check radiation levels in the containment under accident conditions. The high range monitors are listed in Table 5-2.

2.2 Process Radiation Monitoring System

The Process Radiation Monitoring System consists of particle, liquid, and gas channels. These monitors ensure that releases of radioactive effluents from the plant do not exceed allowable limits in accordance with Part 20 of Title 10 of the Code of Federal Regulations (10 CFR 20). A list of each process radiation monitor, its range and sensitivity, and the type of detector it uses is provided in Tables 5-3 and 5-4.

3.0 DETAILED DESCRIPTION

3.1 Area Radiation Monitoring System

The **AREA RADIATION MONITORING SYSTEM** consists of radiation monitors that provide a continuous indication and a permanent record of gamma radiation levels at selected plant locations. Each of the area radiation monitors consists of a detector unit, a check source, indicator and trip units, an analog output, a mimic panel light, and an annunciator input. The monitor alarm setpoints are variable and are set at levels sufficiently above the normal background radiation levels in the respective areas to minimize the occurrence of spurious trips. The monitor locations are listed in Table 5-1.

The **DETECTOR** is a Geiger-Mueller tube. The wall mounting also contains a solenoid-operated **CHECK SOURCE** to verify detector response, in addition to a local **METER** and **ALARM** annunciator. All instrument channels are also provided with a Control Room alarm, meter indication and recording, and electronic test features which, together with the solenoid-operated check sources, provide the operator with a convenient means to routinely check instrument function and response. Each detector has an energy dependence of $^{+}20$ percent of the actual radiation intensity over an energy response from 80 keV to 3 MeV. The monitor meters are marked and calibrated in decades of Roentgens per hour (10^{-4} R to 10^{1} R/hour log scale).

The radiation detectors produce a **CURRENT OUTPUT** that is proportional to the gamma radiation level present at the detector. Each detector unit is encased in a cylindrical aluminum container that is sealed against its environment. The Geiger-Mueller tube is at one end of the cylinder, protected by a plastic enclosure. Gamma radiation passing through this tube ionizes gas molecules encountered along its passage through the detector volume. A high DC voltage applied across the Geiger-Mueller tube separates the ion pairs, minimizing recombination before the ions can be collected at the detector wall or central electrode. This voltage also provides the mechanism for gas amplification of the event, producing a signal pulse many times greater in magnitude than the initial event. Halogen gas present in the detector quickly quenches the discharge after it has registered. The signal pulses are processed and integrated by a **CONVERTER**, producing a DC current with a magnitude proportional to the logarithm of the rate at which ionizing events are occurring within the detector. The converter is located inside the detector cylinder.

The output of the detector is converted to an amplified voltage signal by a DC **AMPLIFIER**. The amplified output voltage is applied to a trip circuit, remote and local indicators, and a recorder

The amplified output voltage from the detector is applied to indicator on Control Room panel 1C22 which indicates radiation level (10^{-4} to 10^{1} R/hr scale). The rate meter provides both alarm contact and an analog output.

The alarm relay de-energizes when in a alarm condition. The alarm trip is indicated by a red HIGH ALARM light on the detector's channel drawer of 1C22 and by a mimic light on panel 1C22H. Initiation of any of the area radiation monitor alarms causes a master Radiation Monitor Panel alarm on Control Room panel 1C17 to trip. All alarms are also annunciated at both their remote and local stations.

The area radiation monitors are equipped with a separate trip circuit connected as a downscale trip to protect against instrument malfunctions. The downscale trip occurs whenever the input signal decreases to less than a preset low trip setpoint. Any malfunction in the area monitor which interrupts the DC amplifier output results in a downscale trip. This trip provides indication that a channel is inoperable.

3.1.1 Containment Area Radiation Monitors

The four low range area radiation monitors provide control signals as well as indications and alarms. Each monitor has a range of 0.1 mR/hr to 10 R/hr. Upon alarm on high activity, their output is used in a two-out-of-four logic matrix to initiate a Containment Radiation Signal (CRS) shuts the containment purge isolation valves. The CRS is provided in order to limit release of radioactive fission products from a fuel handling accident. The containment area radiation monitors are listed in Table 5-2.

The analog output from the containment area radiation monitors provides the input to voltage to voltage signal converters. The output from the E/E isolator provides an input to the CRS bi-stables in the Engineered Safety Features Actuation System (ESFAS). Actuation of the CRS isolates and secures the Containment Purge System. For a detailed description of the CRS, refer to the Engineered Safety Features Actuation System system description.

3.1.2 Containment High Range Gamma Monitors

Redundant high range (10^8 R/hr) **GAMMA DETECTORS**, installed in each unit's containment, provide the ability to check radiation levels in the containment under accident conditions. The detectors, located on the 73-foot level of the containment, are mounted near steam generator 12/22 (1-RE-5317B/2-RE-5317B) and near pressurizer 11/21 (1-RE-5317A/2-RE-5317A), both facing the refueling cavity/pool. The amplified output voltages from the ionization chamber type radiation detectors is provides a signal to indicators 1(2)-RI-5317A and 1(2)-RI-5317B , located on Control Room panel 2C24B. The indicators have a log scale marked with a range from 0 to 10^8 R/hr. The scale indicates a low reading under normal conditions, due to an internal radioisotope in the detector.

The indicators and controls for both Unit-1 and Unit-2 are mounted in the Control Room on panel 2C24B. Each indicator has three lights which function as follows:

Green light

- normally on
- light goes out on system failure (failure via detector or electronics)
- push to reset

Amber light

- trip one - not used
- push to reset

Red light

- trip two - indicates high alarm (light on)
- on high alarm the system is in range
- push to reset

Actuation of any of the detector high level alarms or a system failure is indicated by a Containment Radiation Monitor Level Hi-Hi alarm on Control Room panel 1C10 (2C10). A High alarm shuts Hydrogen Purge MOVs. A detector system failure does not actuate a plant computer alarm. Calibration controls, adjustment controls, and a three position switch (CHECK, OPERATE, and TRIP ADJUST) are also provided on Control Room panel 2C24B.

3.2 Process Radiation Monitoring System

The following subsections describe the various radiation monitoring systems that comprise the **PROCESS RADIATION MONITORING SYSTEM**. A detailed description of the particle, gas, and liquid monitors is provided. Each of the process monitors has a remote visual/audible alarm and visual meter indication at the detector location, plus main Control Room alarm annunciation, meter indication and recording. Several of the monitor signals are also supplied to the plant computers. A list of each process radiation monitor, its range and sensitivity, and the type of detector it uses is provided in Tables 5-3 and 5-4.

3.2.1 Plant Main Vent Monitor System

The Plant Main Vent Monitor System consists of:

1. a low range GM gas monitor 1(2)-RE-5415
2. a low range beta scintillation detector 1(2)-RE-5416 (part of the WRNGM)
3. a mid range solid state detector 1(2)-RE-5417
4. a high rang solid state detector 1(2)-RE-5418
5. Particulate and Tritium sample skid 1(2)-RE-5320A & 1(2)-RE 5320B

All of these detectors are located on the 69-foot level of the Auxiliary Building near the main vent exhaust plenum in Rooms 524 (Unit-1 monitors) and 526 (Unit-2 monitors).

Each of these detectors is equipped with a check source to allow the control room to verify functionality of each channel.

The Unit-1 main exhaust plenum receives air from the auxiliary and radwaste building exhaust system, the fuel handling area exhaust system, the Containment Purge System, the Control Room ventilation radiation monitor exhaust, and an outside air makeup supply line. The makeup air ensures proper air dilution of the activity passing out the plant vent by providing sufficient air flow at all times. The Unit-2 main exhaust plenum receives air from the auxiliary and radwaste building exhaust system, the access control area, the Containment Purge System, and an outside air makeup supply line. Two redundant vane axial main exhaust fans for each unit take a suction from the main exhaust plenum and discharge the air up the main vent. Exhaust from the Unit-1 and Unit-2 ECCS Exhaust and Penetration Room Exhaust Systems enters its respective discharge duct between the main exhaust fans and the plant vent. The flow up the plant vent is joined by condenser vacuum pumps discharge, waste gas header discharge, and the blowdown tank vent.

The channel 1(2)-RE-5415 draws a sample flow rate of 10 scfm from the main vent, through the GM counting geometry and returns the sample to the main vent

A high differential pressure alarm is actuated at 2.5 psig increasing on Control Room panel 1C26 if a clog develops in this sample line. Actuation of this alarm also actuates a master Radiation Monitor Flow Annunciator alarm on Control Room panel 1C18.

The output of the detector is converted to an amplified voltage signal by a DC amplifier. The amplified output voltage from the detector provides an input to the rate meter 1-RI-5415 (2-RI-5415) on Control Room panel 1C22B (1C22F) which indicates beta-gamma activity in a gas sample over a range of 10^1 to 10^6 cpm.

The rate meter provides actuates alarm relays and provide an analog output proportional to the indicated count rate. The high level alarm de-energizes its associated relay at the alarm setpoint. The alarm condition is evident at both the local and remote stations, and is indicated by a red light labeled HIGH ALARM on 1C22B (1C22F) and by a mimic light on 1C22H. Initiation of this alarm causes a master Radiation Monitor Panel alarm on Control Room panel 1C17 to trip. A low level alarm is indicated on the channel drawer by a red light to warn of detector failure. Other alarms, indications, and controls provided at the detector drawer are as follows:

A **channel TEST** light (blue) is lighted when testing and/or calibrating the detector.

A **PWR ON** light (orange) is lighted when the detector channel drawer is energized.

An **OPERATION SELECTOR SWITCH** allows selection of one of five positions (CHECK SOURCE, OPERATE, RESET, LEVEL CAL, and PULSE CAL). For normal operation of the monitor, the switch is placed in the OPERATE position.

A **RANGE SELECTOR SWITCH** (WIDE, NARROW, and HV positions) allows selecting either the wide or narrow range of detector counts per minute or the high volts (kilovolts DC) scale for display.

3.2.2 Wide Range Noble Gas Monitor System

The **WIDE RANGE NOBLE GAS MONITOR (WRNGM) SYSTEM** was added to complement the Plant Main Vent Monitor System and increase the detection range. The WRGNM consists of three gaseous detectors 1(2)-RE-5416, 1(2)-RE-5417 and 1(2)-RE-5418, a sample conditioning skid, a sample detection unit, a microprocessor, and Control Room electronics. The sample conditioning skid which includes the capability to obtain particulate and iodine grab samples and the sample detection skid which includes the detectors (1/2-RE-5416, -5417, -5418) are mounted on the 69-foot level in the Fan Room, near the existing

condenser off gas monitors. The microprocessor is mounted in the Control Room on the wall adjacent to control panels 2C24 and 2C26. The control modules for each unit are located in control panel 2C24B and the recorders for both units are located in control panel 2C26.

The sample flow for the WRNGM System is collected from the main vent stack by two isokinetic nozzle assemblies: a high flow, low range sample which is directed to low range detector 1(2)-RE-5416; and a low flow, high range sample which is directed to mid range detector 1(2)-RE-5417 and high range detector 1(2)-RE-5418. Both sample flows first pass through individual sample conditioning skids before reaching the sample detection skid which includes the detectors. The sample passes through one of three filter assemblies at the sample conditioning skid. Two of the filter assemblies are used for removing particulates and iodine from the sample, and the third is used for obtaining a grab sample. Selection of the desired filter assemblies is accomplished by the positioning of switches on Control Room panel 2C24B. The prefilters and grab samples for the mid/high range flow path are lead shielded to minimize personnel exposure in the event of significant filter contamination due to a high activity release. (Manual or automatic purging is available to remove residual activity.) A flow control valve for each flow path is controlled by the microprocessor to establish uniform sample flow conditions.

Each of the two flow paths has a pump which is located at the sample detection skid. If the microprocessor determines that the low range detector or the mid/high range detectors are out of range and an activity limit. has been exceeded, the pump for the out-of-range detector is turned off. Before the pump is allowed to shut down, however, the flow path is automatically purged. The discharge path of the mid/high range pump contains an in-line filter also located on the sample detection skid before the mid/high range detectors. This filter removes water condensation in the lines downstream of the prefilters and also removes any particulate due to xenon decay in the lines running from the sample conditioning skid.

The signal outputs of the detectors are stored in channels 1 (low range), 2 (mid range), and 3 (high range) of the microprocessor data base. Each channel also drives a pen chart recorder 1(2)-RR-5416 which records individual detector activity readings on Control Room panel 2C26. The microprocessor receives the signal from each channel, determines which channel is most representative of the stack effluent, and submits this value along with stack flow as data to channel 4 to determine and record the effluent release rate. Channel 4 drives the stack effluent chart recorder 1(2)-RR-5415 and causes initiation of alert and high alarms. Initiation of the alert and high alarms is indicated by red lights on Control Room panel 2C24B and by a master Plant Vent Effluent Radiation Monitor 2C24B alarm on Control Room panel 1C10 (2C10).

A flow meter for each flow path displays the flow rate at the sample detection skid. The mid/high range flow meter is marked directly in scfm. The low range flow meter has a linear scale of 0 to 150 which corresponds to a flow range of 0 to 0.084 scfm. The nominal flow rate of 0.06 scfm corresponds to a scale reading of 107. An electronic flow meter, provided for each flow path, supplies flow signals to the microprocessor which makes the isokinetic flow control calculations. Downstream of the flow meters each sample path flows through a check valve and an isolation valve before joining in a common header which discharges to the main vent stack.

3.2.2.1 Isokinetic Nozzles

Two sets of **ISOKINETIC NOZZLES** per unit are installed in the plant main vent at the 182-foot level to provide a constant velocity flow to the detectors. One set is for the low range, high flow sample line, and the other is for the mid/high range, low flow sample line. Also located at the 182-foot level is a temperature element used by the microprocessor for stack flow calculations. A differential pressure detector, located at the 183-foot level, also provides a signal to the microprocessor. Both sample lines are provided with heat tracing from the vent stack to the sample conditioning skid to prevent condensation. Two temperature controllers, located along each line, control the heat tracing.

3.2.2.2 Sample Conditioning Skid

The **SAMPLE CONDITIONING SKID** consists of a low range, high flow system and a mid/high range, low flow system. Each system contains three filter assemblies. Two of the filter assemblies are used for removing particulates and iodine from the sample, and the third is used for obtaining a grab sample. Quick release disconnects allow for easy removal of the filters for testing of radioactive particles in the laboratory. The high range sample path filter assemblies are lead shielded to minimize personnel exposure in the event of significant filter contamination due to a high activity release.

The sample conditioning skid solenoid valves are controlled by the positioning of two filter switches and two start timer pushbuttons on Control Room panel 2C24B as follows:

- **LOW RANGE FILTER SWITCH.** The high flow, low range filter switch has two positions (A and B) and is used to determine which particulate and iodine filter assembly is used. Selecting position A opens solenoid valve 1(2)-SV-5415A and shuts solenoid valves 1(2)-SV-5416A and 1(2)SV-5417A. Selecting position B opens solenoid valve 1(2)-SV-5416A and shuts the other two solenoid valves.

- **MID/HIGH RANGE FILTER SWITCH.** The low flow, mid/high range filter switch has two positions (C and D) and is used to determine which particulate and iodine filter assembly is used. Selecting position C opens solenoid valve 1(2)-SV-5415B and shuts solenoid valves 1(2)-SV-5416B and 1(2)-SV-5417B. Selecting position D opens solenoid valve 1(2)-SV-5416B and shuts the other two solenoid valves.

- **LOW RANGE START TIMER.** Depressing the red pushbutton for the high flow, low range start timer automatically opens solenoid valve 1(2)SV-5417A and shuts solenoid valves 1(2)-SV-5415A and 1(2)-SV-5416A. The timed grab sample is obtained and then valve 1(2)-SV-5417A shuts and the solenoid valve corresponding to the position selected on the filter switch opens. The time of the grab sample is preset by positioning three thumbscrews on the front of the timer display on panel 2C24B. The time can be set over a range of 0 to 99 minutes.

- **MID/HIGH RANGE START TIMER.** Depressing the red pushbutton for the low flow, mid/high range start timer obtains a grab sample by opening solenoid valve 1(2)-SV-5417B and shutting valves 1(2)-SV-5415B and 1(2)-SV-5416B. After a preset time period, valve 1(2)-SV-5417B shuts and the solenoid valve corresponding to the position selected on the filter switch opens. The time of the grab sample is preset by positioning three thumbscrews on the front of the timer display on panel 2C24B. The time can be set over a range of 0 to 99 seconds.

Blowdown connections located at the sample conditioning skid allow backwashing the sample lines upstream of the skid. The backwash flow blows out loose particles that may have collected at the isokinetic nozzle orifices. To blow down the line a pressurized gas source (not to exceed 100 psig) is connected to an in-line screw cap. The isolation valve located just downstream of the screw cap is shut during the backwashing process to prevent backwashing into the conditioning skid.

3.2.2.3 Sample Detection Skid

Two solenoid valves in each flow line, located at the **SAMPLE DETECTION SKID**, allow the channeling of sample gas or purge gas through the entire flow line. The solenoid valve allowing purge gas through the system is numbered 1(2)SV-5419A (B for low flow, high range) and the solenoid valve allowing sample gas to flow through the system is 1(2)-SV-5418A(B).

Sample flow through the system is developed by a motor-driven pump in each line. The high flow, low range pump has a capacity of 2.0 scfm. The low flow, high range pump is rated for 0.06 scfm. The flow rate of each sample line is controlled by a motor-operated ball valve (MOV-5415A/B) located upstream of

the pump. The position of the valve is controlled by the microprocessor to maintain isokinetic flow conditions. The sample flow discharged by the low flow, high range pump passes through a filter which removes condensation in the lines downstream of the prefilters and also removes any particulate resulting from xenon decay in the lines running from the sample conditioning skid.

The sample flow lines next pass through the detectors. The low range detector, 1(2)-RE-5416, is a beta-sensitive, plastic scintillator-photomultiplier tube assembly encased in lead shielding. The mid and high range detectors in the other sample flow path are 1(2)-RE-5417 and 1(2)-RE-5418, respectively. These detectors are solid-state CdTe (Cl) - cadmium telluride - chlorine doped detectors that operate at normal ambient temperatures. Detector operability can be checked for each detector by individual check sources controlled by the microprocessor. The microprocessor displays the detector outputs in a step-wise fashion. During normal operation, only the low range detector is on line. If the count rate increases, the microprocessor automatically activates the mid range detector and shuts off the low range detector when counts begin to exceed its range. If counts continue to climb, the high range detector is activated and the mid range detector is shut off when counts exceed its range. This process is repeated in the opposite direction when counts decrease. The reading of the onservice detector is displayed by a digital readout in microCi/cc on Control Room panel 2C24B. The in-service detector is indicated by a white light (LOW RANGE, MID RANGE, or HIGH RANGE) on the same panel.

The sample mass flow rate downstream of the detectors is measured in each line by an in-line flow transducer (FT-5415A/B) which inputs a signal to the microprocessor, and by an in-line visual flow meter (FG-5415A/B) which is mounted adjacent to the power controller enclosure on the sample detection skid. The low range (high flow) flow meter reads directly in scfm. The mid/high range (low flow) flow meter has a linear scale of 0 to 150 which corresponds to a flow range of 0 to 0.084 scfm. The nominal flow rate of 0.06 scfm corresponds to a scale reading of 107.

3.2.2.4 Microprocessor

The **microprocessor** assembly contains the electronics necessary for the monitoring, controlling, alarming, and recording functions of the WRGM System. The power supplies for the electronics and the junction box are also contained in the microprocessor assembly.

The microprocessor electronics are housed in metal enclosure mounted in the Control Room on the wall adjacent to panels 2C24A and 2C26. A motherboard printed circuit board is mounted on the rear of the microprocessor enclosure. The motherboard is fitted with edge connectors that allow insertion of the electronic circuit boards. The complement of printed circuit boards for the microprocessor is as follows:

Designation	Function
A1	Preamplifier/Discriminator
A2	Power/Isolation
A3	ADC/DAC
A4	Input/Output (I/O)
A5	Central Processor Unit (CPU)

The microprocessor program includes memory locations for storing alarm setpoints for the alert and high radiation level alarms and flow rate alarms. Additional memory locations are provided for entering calibration conversion constants and for storing history files covering 24 ten-minute averages, 24 hourly averages, and 28 daily averages.

3.2.2.5 Control Room Electronics

The Control Room equipment consists of a 32 channel **CHART RECORDER** and an electronics control panel **(NIM BIN)** both located on panel 2C24B. The chart recorder is used to display the levels of the low,

mid, and high range channels of the wide range gas monitor system and displays the release rate (10^0 to 10^{12} Ci/sec) of stack effluent activity. The electronics NIM BIN houses the components necessary for taking timed grab samples and for the remote selection of filters on the sample conditioning skid. The NIM BIN also houses a keyboard used for data base loading, data base interrogation, and alarm signal outputs. The RM-23 automatically displays sensor status, alert and alarm signals of the microprocessor sensors, and has access for display and/or control of all other transmitted or stored data. The keyboard also displays and controls microprocessor monitor functions. All stored data and setpoints are entered on the Keyboard. The alarm levels and conversion constants stored in the microprocessor memory may be altered by the keyboard. Tables 5-7 and 5-8 list the controls, indications, and alarm functions of Control Room panels 2C24B and 2C26, respectively.

3.2.3 Containment Atmosphere Radiation Monitoring System

The Containment Atmosphere Radiation Detectors monitor for changes in the activity of the containment atmosphere. These two monitors satisfy Calvert Cliffs Nuclear Power Plant's commitment to Reg. Guide 1.45. The site's licensing basis is that with RCS activity equivalent to 1% failed fuel, either of these monitors will detect a 1 gallon per minute reactor coolant leak inside containment within 1 hour.

This system is comprised of two detectors, 1(2)-RE-5280, a beta scintillation detector that monitors the collected activity on a moving filter paper and a noble gas channel 1(2)-RE-5281.

Technical Specification 3.4.14 requires either 1(2)-RE-5280 or 1(2)-RE-5281 be operable in Mode 1 through 4. If both channels are inoperable, then a minimum of one channel must be restored to service within 30 days. If either channel cannot be restored within the 30 day limit, then the Unit must be in Mode 3 within 6 hours and Mode 5 within 36 hours.

The containment atmosphere radiation monitor is comprised of an off-line sample skid that contains the moving filter paper assembly, a charcoal filter, redundant sample pumps and a noble gas channel. A General Atomics RM-2000 digital processor provides the excitation voltage to the two beta scintillation detectors, processes the output from the two detectors, and displays the results in counts per minute. The noble gas channel is Channel #1 on the RM-2000, and the particulate channel is Channel #2.

The RM-2000 provides a digital communication link to the RM-2300 display module, 1(2)-RIC-5280, on control room panel 1C22G.

1(2)-RIC-5280 is equipped with:

- HIGH Alarm relay that actuates on high count rate
- OPER Alarm relay that actuates on loss of channel (low sample flow, low count rate, Watchdog timer on the RM-2000, failed source check, moving filter paper fault)
- An Action Pak that provides an analog output to a chart recorder.

There are no valve interlocks associated with these channels. The OPER or the HIGH alarm actuates a mimic light on 1C22H, and the Radiation Monitor Panel alarm on 1C17. The annunciator alarm can be cleared by pressing the mimic light on 1C22H.

Located next the RM-2300 is 1(2)-HS-5278. This hand switch operates three solenoid valves and determines the source of the sample flow to the skid. In the "OPEN PIPE" position, the hand switch opens 1(2)-SV-5282 to pull the sample from the auxiliary building to purge the skid. **This mode of operation is not recommended because there is no roughing filter on this sample point.**

In the "VENT" position, 1(2)-SV-5278 is opened, allowing the skid to sample from the Containment Ventilation System. The normal mode of operation is to have 1-HS-5278 in the "CONTAIN" position. In this position, 1(2)-SV-5277 is open and the skid is sampling containment atmosphere.

If a purge of the skid is required, a purge can be initiated from the RM-2000/RM-2300 display. This opens a purge supply valve on the skid. Upstream of the purge supply valve is a roughing filter, to protect skid components from any gross debris in the purge flow. Purge flow still exhausts through the normal discharge of the skid.

The moving filter paper assembly contains the paper supply reel, a grate that the filter paper pass over, the take up reel, the motor drive for the take-up reel, the beta scintillation detector, 1(2)-RE-5280 and its associated check source. Sample flow from containment is routed to the filter paper assembly where it exits a grate and disposes particulate on the filter paper. A sample pump draws a vacuum in the assembly housing and provides the motive force for the sample to exit the assembly housing and to pass through the charcoal cartridge and the noble gas sampler.

The filter paper moves at approximately ½ inch per hour. There is a switch, mounted on the exterior of the assembly housing to allow an operator to fast advance the filter paper. Filter paper can also be fast advanced from a command on the RM-2000/RM-2300.

The rotation of the gear teeth on the filter paper supply spool provides input into the OPER alarm logic. A sensor generates a pulse for each tooth that rotates past the sensor. If a minimum number of pulses are not detected over a specified time limit, the OPER alarm will actuate on the RM-2000, indicating a problem with the moving filter.

The charcoal filter is located on the discharge of the moving filter paper assembly. There is no detector associated with the charcoal filter. The filter must be removed for analysis in a laboratory.

Downstream of the charcoal filter is the flow control valve that maintains the sample flow at 2.0 SCFM. Control constants for flow control valve are stored in the RM-2000 data base.

The skid is equipped with redundant sample pumps. When the operating pump fails while in service, the standby pump can be placed, minimizing the out of service time for the skid. Operation of the sample pumps in performed from the RM-2000/RM-2300 displays. Selection of the operating sample pump is made from the local control panel, mounted on the skid.

On the discharge of the sample pumps is the beta scintillation detector and its check source, housed in a lead 4π sample chamber, when noble gas activity is monitored. The sample that leaves the noble gas sample chamber is discharged to the Contain Purge Air Exhaust Filter Units, before being discharged to the main vent.

3.2.4 Waste Gas Discharge Monitor

The **WASTE GAS DISCHARGE MONITOR** (0-RE-2191), located on the 69-foot level of the Auxiliary Building adjacent to the Unit-2 containment personnel lock, monitors gases discharged from the waste gas decay tanks after they have passed through an absolute filter prior to their release from the plant vent. The detector is an In-Line GM tube with a range of 10^1 to 10^6 counts per minute.

The output of the detector is converted to an amplified voltage signal by a DC amplifier. The amplified output voltage is applied to a trip circuit, a recorder, and remote and local indicators. The amplified output voltage is applied to indicator 0-RI-2191 on the detector drawer on Control Room panel 1C22D which indicates radioactivity level over a range of 10^1 to 10^6 cpm (wide range scale selected) or a range of 10^1 to 10^4 cpm (narrow range scale selected) and kilovolts DC (0 to 2.5). The indicator sends a signal to an auxiliary unit, a recorder, the plant computer, and a trip circuit. The auxiliary unit (0-RI-2191A) provides a High Level alarm and radiation level indication at the detector location. The radiation recorder (0-RR-12) continuously records the radiation level in counts per minute as does the plant computer.

The trip (0-RI-2191A) deenergizes its associated relay at the alarm setpoint which provides control inputs to indicators and alarm circuits. The alarm trip is annunciated at both its local and remote stations and is indicated by a red light labeled HIGH ALARM on 1C22D, by a mimic light on 1C22H, and by a master Radiation Monitor Panel alarm on 1C17. Other alarms, indications, and controls provided at the detector drawer are as follows:

- A **channel TEST** light (blue) is lighted when testing and/or calibrating the detector.
- A **PWR ON** light (orange) is lighted when the detector channel drawer is energized.
- An **OPERATION SELECTOR SWITCH** (0-HS-2190) allows selection of one of five positions (CHECK SOURCE, OPERATE, RESET, LEVEL CAL, and PULSE CAL). For normal operation of the monitor, the switch is placed in the OPERATE position. Placing the handswitch to the CHECK SOURCE position actuates a solenoid-operated 10 Ci Cs^{137} test source which causes an instrument response of 30 to 50 percent of full scale to check the detector for proper operation. The remaining three switch positions are used when calibrating the detector.
- A **RANGE SELECTOR SWITCH** (WIDE, NARROW, and HV positions) allows selecting either the wide or narrow range of detector counts per minute or the high volts (kilovolts DC) scale for display.

A high activity alarm on detector 0-RE-2191 also automatically shuts the redundant waste gas discharge isolation valves (0-CV-2191 and 0-CV-2192) to prevent the release of radioactive gas from the Waste Gas System in excess of allowable limits. Indication of the waste gas discharge flow rate (0 to 50 scfm) is provided on Control Room panel 1C33 and panel 1C3 on the -15 ft level of the Auxiliary Building.

3.2.5 Liquid Waste Processing Discharge Monitor

The **LIQUID WASTE PROCESSING DISCHARGE MONITOR** 0-RIC-2201 draws a 5 gallon per minute sample from the common waste discharge header to ensure that the activity in a liquid discharge does not exceed that discharge permit's limits.

The monitor uses an offline sample skid. The detector, 0-RE-2201, is a sodium iodide gamma scintillation detector, housed in a 4π sample chamber. The pulse output from the detector is processed by a General Atomics – ESI RM-2000 digital radiation processor. The location ID for this RM-2000 is 0-RIT-2201.

0-RIT-2201 also provides the high voltage excitation to 0RE-2201. Pulses from the detector pass through a low level discriminator set at approximately 70 keV. The discriminator pulses provide input into a counting circuit. The results from the counting circuit are displayed on 0-RIT-2201 in counts per minute. The RM-2000 provides a digital communication link to the RM-2300 display module, 0-RIC-2201, on control room panel 1C22D.

0-RIC-2201 is equipped with:

- HIGH Alarm relay that actuates on high count rate
- OPER Alarm relay that actuates on loss of channel (low sample flow, low count rate, Watchdog timer on the RM-2000, failed source check)
- An Action Pak that provides an analog output to a chart recorder and to the plant computer.

Located next to the RM-2300 is a bypass module. The bypass module is equipped with two key locks. One key lock bypasses the HIGH alarm interlocks. The second key lock bypasses the OPER alarm interlocks. The bypass module is equipped with a yellow lamp that is illuminated any time either, or both of the key lock switches is in the bypass position.

With both bypass key locks in the OFF position, a OPER alarm or a HIGH alarm automatically shuts the discharge isolation valves 0-CV-2201 and 0-CV-2202, terminating any discharge to the environment.

The OPER or the HIGH alarm actuates a mimic light on 1C22H, and the Radiation Monitor Panel alarm on 1C17. The annunciator alarm can be cleared by pressing the mimic light on 1C22H.

The sample is skid is equipped with a 120 VAC, single phase, ½-HP centrifugal sample pump and a low flow switch. The low flow sample switch trips the pump if a low flow condition is detected. A low flow condition activates the OPER alarm on the RM-2000 and the RM-2300. The pump can be stopped and started from the RM-2000/RM-2300 display.

The check source is activated from the RM-2000/RM-2300 display. Activating the check sources freezes the indication on the RM-2000, the RM-2300 as well as the analog output to the recorder and plant computer. The high alarm is bypassed when a check source is activated.

If desired, this skid can be purged with demineralized plant water by initiating a purge from the RM-2000/RM-2300 display. Note that when a purge is initiated, the sample pump must also be started.

3.2.6 Condenser Air Removal Discharge Monitors

A CONDENSER AIR REMOVAL DISCHARGE MONITOR is installed on the suction of each condenser air removal pump, for a total of 4 detector channels per unit. The detectors are in a shielded in-line geometry.

The detectors are gamma scintillation detectors. The rate meters, located on control room panel 1C22G, have a calibrated range of 10 to 10^7 counts per minute. Each rate meter provide a 4 to 20 mA output to the leak rate calculator 1(2)-RY-1752. The leak rate calculator selects the highest count rate from the four rate meters. Based on RCS activity, the calculator determines the primary to secondary leak rate. The 4 to 20 mA output from the calculator goes to the recorders 1(2)-RR-11(21) and to the plant computer. Alarm relays on the rate meters provide input to the status lights on 1C22H

3.2.7 Component Cooling System Radiation Monitors

COMPONENT COOLING SYSTEM RADIATION MONITORS are installed in the suction header of the component coolant pumps to detect possible in-leakage of radioactive liquids through certain heat exchangers. Flow through the radiation monitoring unit is produced by the differential pressure across the component cooling pumps. The Unit-1 monitor (1-RE-3819) is located on the north side of the Component Cooling Room (Room 228) on the 5-foot level of the Auxiliary Building. The Unit-2 monitor (2-RE-3819) is located on the south side of the Component Cooling Room (Room 201) on the 5-foot level of the Auxiliary Building.

The flow path starts at the component cooling pump normal and standby discharge headers, flows through the radiation detector (1-RE-3819/2-RE-3819), and returns to the component cooling pump suction headers Check valves, provided in the supply lines, prevent back flow between the two headers.

The detectors are scintillation detectors which contain a 1 1/2 inch by 1 inch, thallium-activated sodium iodide (NaI-TL) crystal optically coupled to a photomultiplier tube. The photomultiplier tube converts light flashes emitted from the crystal into electrical pulses which are proportional to the gamma radiation level present at the detector. The output is amplified and applied to indicator 1-RI-3819 (2-RI-3819) on Control Room panel 1C22A (1C22E) which indicates radioactivity level over a wide range of 10^1 to 10^6 cpm or a narrow range of 10^1 to 10^4 cpm and kilovolts DC (0 to 2.5). The indicator sends a signal to an auxiliary unit, a radiation recorder, and a trip circuit. The auxiliary unit (1-RI-3819A/2-RI-3819A) provides a High Level Trip alarm and radiation level indication at the detector location. The radiation recorder (1-RR-11/2-RR-21) continuously records the radiation level in counts per minute. The trip unit (1-RI-3819A/2-RI-3819A) is set to trip at a specific activity level at the detector. The trip deenergizes its associated relay, the

contacts of which provide control inputs to indicators and alarm circuits. The alarm trip is annunciated at both its local and remote stations and is indicated by a red light labeled HIGH ALARM on 1C22A (1C22E) and by a mimic light on 1C22H. Initiation of this alarm also causes a master Radiation Monitor Panel alarm on Control Room panel 1C17. This master alarm alerts the operator to an individual alarming condition on the radiation monitor panel.

3.2.8 Service Water System Radiation Monitors

SERVICE WATER SYSTEM RADIATION MONITORS are installed in the service water return headers of each spent fuel pool cooler to detect possible in-leakage of radioactive liquids from the coolers. The radiation monitors for both units (1-RE-1595 and 2-RE-1595) are located adjacent to one another on the outside of the north wall of Unit-1 corridor just southeast of 5-foot West Penetration Room on the 5-foot level of the Auxiliary Building.

Flow through the radiation monitoring unit is produced by the service water radiation monitor pump which continuously draws a sample flow from the service water return header and discharges back to the same header. Monitor pump 11(21) draws a sample flow through radiation monitor 1-RE-1595 (-RE-1595. The pumps are located side by side on the 5-foot level of the Auxiliary Building on a skid located southeast of the West Penetration Room. Pump 11 (21) is started by handswitch 1-HS-1595A (2-HS-1595A) which is located at the pump. Pressure indicator 1-PI-1595 (2-PI-1595) provides local indication of pump discharge pressure, and flow indicator 1-FIS-1595 (2-FIS-1595) provides local indication of flow rate through the radiation monitor. At a flow rate of 2 gpm decreasing, a Unit-1 (-2) Service Water RMS Flow Lo alarm is actuated on Control Room panel 1C2 and a master Radiation Monitor Flow Annunciator alarm is annunciated on Control Room panel 1C18. The low flow alarm could be caused by loss of power to the pump, pump failure, isolation of the radiation monitor, and/or a leak or restriction in the sample line.

The detectors are off-line scintillation detectors which contain a 1 1/2 inch by 1 inch, thallium-activated sodium iodide (NaI-TL) crystal optically coupled to a photomultiplier tube. The photomultiplier tube converts light flashes emitted from the crystal into electrical pulses which are proportional to the gamma radiation level present at the detector. The output is amplified and applied to indicator 1(2)-RI-1595 on Control Room panel 1C22B (1C22F) which indicates gamma activity over a range of 10^1 to 10^6 cpm (wide range scale selected) or a range of 10^1 to 10^4 cpm (narrow range scale selected) and kilovolts DC (0 to 2.5). The indicator sends a signal to an auxiliary unit, a radiation recorder, and a trip circuit. The auxiliary unit (1-RI-1595A/2-RI-1595A) provides a High Level Trip alarm and radiation level indication at the detector location. The radiation recorder (1-RR-12/2-RR-22) continuously records the radiation level in counts per minute. The trip (1-RI-1595A/2-RI-1595A), which provides control inputs to indicators and alarm circuits, deenergizes an associated relay at the alarm setpoint. The alarm trip is annunciated at both its local and remote stations and is indicated by a red light labeled HIGH ALARM on 1C22B (1C22F), by a mimic light on 1C22H, and by a master Radiation Monitor Panel alarm on 1C17. A low level alarm is indicated on the channel drawer on 1C22B by a red light to warn of detector failure. Other alarms, indications, and controls provided at the detector drawer are the same as those provided for the waste gas discharge monitor.

3.2.9 Steam Generator Blowdown Tank Discharge Monitors

The **STEAM GENERATOR BLOWDOWN RADIATION MONITOR, 1(2)-RE-4014** draws a 5 gallon per minute sample from the S/G Blowdown Tank to ensure that the activity in a S/G blowdown does not exceed the discharge permit's limits.

The monitor uses an offline sample skid. The detector, 1(2)-RE-4014, is a sodium iodide gamma scintillation detector, housed in a 4π sample chamber. The pulse output from the detector is processed by a General Atomics – ESI RM-2000 digital radiation processor. The location ID for this RM-2000 is 1(2)-RIT-4014.

The RM-2000 processor also provides the high voltage excitation to the detector. Pulses from the detector pass through a low level discriminator set at approximately 70 keV. The discriminator pulses provide input into a counting circuit. The results from the counting circuit are displayed on the RM-2000 in counts per minute. The RM-2000 provides a digital communication link to the RM-2300 display module, 1(2)-RIC-4014 on control room panel 1C22G.

The RM-2300 is equipped with:

- HIGH Alarm relay that actuates on high count rate
- OPER Alarm relay that actuates on loss of channel (low sample flow, low count rate, Watchdog timer on the RM-2000, failed source check)
- An Action Pak that provides an analog output to a chart recorder and to the plant computer.

Located next to the RM-2300 is a bypass module. The bypass module is equipped with two key locks. One key lock bypasses the HIGH alarm interlocks. The second key lock bypasses the OPER alarm interlocks. The bypass module is equipped with a yellow lamp that is illuminated any time either, or both of the key lock switches is in the bypass position.

With both bypass key locks in the OFF position, an OPER alarm or a HIGH alarm automatically

- shuts the blowdown isolation valves 1(2)-CV-4010, 1(2)-CV-4011, 1(2)-CV-4012 and 1(2)-CV-4013
- Shuts Blowdown Discharge to Circulating Water 1(2)-CV-4015
- Shuts Blowdown Discharge to Main Condenser 1(2)-CV-4096
- Opens1-CV-4097, diverting S/G blowdown effluent to the Miscellaneous Waste System.

The OPER or the HIGH alarm actuates a mimic light on 1C22H, and the Radiation Monitor Panel alarm on 1C17. The annunciator alarm can be cleared by pressing the mimic light on 1C22H.

The sample is skid is equipped with a 120 VAC, single phase, ½-HP centrifugal sample pump and a low flow switch. The low flow sample switch trips the pump if a low flow condition is detected. A low flow condition activates the OPER alarm on the RM-2000 and the RM-2300. The pump can be stopped and started from the RM-2000/RM-2300 display.

The sample skid is equipped with a sample cooler. The S/G blowdown sample is cooled using Component Cooling water. A high temperature switch provides a signal to the RM-2000. If the sample temperature at the discharge of the sample cooler exceeds 145 degrees F, +/- 3 degrees, the RM-2000 shuts the motor operated sample isolation valve, located on the skid and trips the sample pump. These actions prevent the detector from exceeding it maximum operating temperature of 150 degrees F.

The check source is activated from the RM-2000/RM-2300 display. Activating the check sources freezes the indication on the RM-2000, the RM-2300 as well as the analog output to the recorder and plant computer. The high alarm is bypassed when a check source is activated.

3.2.10 Steam Generator Blowdown Recovery Radiation Monitors

The **STEAM GENERATOR BLOWDOWN RECOVERY RADIATION MONITOR, 1(2)-RE-4095** draws a 5 gallon per minute sample from the outlet of the S/G Blowdown ion exchangers or from the outlet of the S/G Blowdown heat exchangers (if the ion exchanger is not is service) to ensure that the activity in a S/G blowdown does not exceed the discharge permit's limits.

The monitor uses an offline sample skid. The detector, 1(2)-RE-4095, is a sodium iodide gamma scintillation detector, housed in a 4π sample chamber. The pulse output from the detector is processed by a General Atomics – ESI RM-2000 digital radiation processor. The location ID for this RM-2000 is 1(2)-RIT-4095.

The RM-2000 processor also provides the high voltage excitation to the detector. Pulses from the detector pass through a low level discriminator set at approximately 70 keV. The discriminator pulses provide input into a counting circuit. The results from the counting circuit are displayed on the RM-2000 in counts per minute. The RM-2000 provides a digital communication link to the RM-2300 display module, 1(2)-RIC-4095 on control room panel 1C22G.

The RM-2300 is equipped with:

- HIGH Alarm relay that actuates on high count rate
- OPER Alarm relay that actuates on loss of channel (low sample flow, low count rate, Watchdog timer on the RM-2000, failed source check)
- An Action Pak that provides an analog output to a chart recorder and to the plant computer.

Located next to the RM-2300 is a bypass module. The bypass module is equipped with two key locks. One key lock bypasses the HIGH alarm interlocks. The second key lock bypasses the OPER alarm interlocks. The bypass module is equipped with a yellow lamp that is illuminated any time either, or both of the key lock switches is in the bypass position.

With both bypass key locks in the OFF position, an OPER alarm or a HIGH alarm automatically shuts the discharge isolation valves 1(2)-CV-4015 and 1(2)-CV-4096. At the same time 1-CV-4097 opens, diverting S/G blowdown effluent to the Miscellaneous Waste System.

The OPER or the HIGH alarm actuates a mimic light on 1C22H, and the Radiation Monitor Panel alarm on 1C17. The annunciator alarm can be cleared by pressing the mimic light on 1C22H.

The sample is skid is equipped with a 120 VAC, single phase, ½-HP centrifugal sample pump and a low flow switch. The low flow sample switch trips the pump if a low flow condition is detected. A low flow condition activates the OPER alarm on the RM-2000 and the RM-2300. The pump can be stopped and started from the RM-2000/RM-2300 display.

The check source is activated from the RM-2000/RM-2300 display. Activating the check sources freezes the indication on the RM-2000, the RM-2300 as well as the analog output to the recorder and plant computer. The high alarm is bypassed when a check source is activated.

3.2.11 Air Monitors

The following plant **AIR MONITORS**, located in the 69-foot level Fan Room, detect gaseous activity within the plant atmosphere and alarm individually in the Control Room upon high activity:

Monitor	Location
0-RE-5350	Control Room Ventilation Supply (Unit-1 Fan Room)
1-RE-5406	Unit-1 ECCS Pump Room Ventilation Exhaust
2-RE-5406	Unit-2 ECCS Pump Room Ventilation Exhaust
1-RE-5410	Unit-1 Waste Processing Area Ventilation Exhaust
2-RE-5410	Unit-2 Waste Processing Area Ventilation Exhaust
0-RE-5420	Fuel Handling Area Ventilation Exhaust (Unit-1 Fan Room)
0-RE-5425	Access Control Area Ventilation Exhaust (Unit-2 Fan Room)

Each detector is an off-line GM tube with a range of 10^1 to 10^6 counts per minute. Control panel 1C22 (the Radiation Monitoring Panel) houses a major portion of the control, conversion, and readout circuitry for each radiation monitor in dual channel computer indicator drawer assemblies. Dual assemblies contain two completely electrically and mechanically isolated channels with shield barriers between each channel. The control panel also houses recorders, terminal boards, relay assemblies, dual voltage power supplies, and required interconnection circuitry. The readout and control channels, located on racks, are in pullout

assemblies mounted on slides. Each detector channel is individually fused with an indicating type fuse holder. Each assembly contains two rotary switches, a meter, two fuses, and four indicator lamps. The rotary switches are an operation selector switch (CHECK SOURCE, OPERATE, RESET, LEVEL CAL, and PULSE CAL positions) and a range selector switch (WIDE, NARROW, and HV positions). The indicator lamps are as follows:

- POWER ON (orange light),
- CHANNEL TEST (blue light),
- HIGH ALARM (red light), and
- LOW ALARM (red light).

The instrumentation, alarm, and control functions of each panel of control panel 1C22 are listed in Table 5-6.

The exhaust air (supply air for the control room) from the applicable area is monitored for gaseous radioactivity by the monitor. A pump located near the monitor draws a representative sample of air through the monitor. The pump is started by handswitch. A flow indicator provides local indication of flow rate. At a flow rate of approximately 8 scfm decreasing an RMS Flow Lo alarm is actuated in the Control Room and a master Radiation Monitor Flow Annunciator alarm is annunciated on Control Room panel 1C18.

The output of the GM tube type detector is converted to an amplified voltage signal by a DC amplifier. The amplified output voltage is applied to a trip circuit, a recorder, and remote and local indicators. The amplified output voltage is applied to indicator on the channel drawer on Control Room panel 1C22 which indicates radioactivity level over a range of 10^1 to 10^6 cpm (wide range scale selected) or a range of 10^1 to 10^4 cpm (narrow range scale selected) and kilovolts DC (0 to 2.5). The indicator sends a signal to an auxiliary unit, a recorder, the plant computer, and a trip circuit. The auxiliary unit provides a High Level alarm and radiation level indication at the detector location. The radiation recorder continuously records the radiation level in counts per minute as does the plant computer.

The trip deenergizes its associated relay at the alarm setpoint which provides control inputs to indicators and alarm circuits. The alarm trip is annunciated at both its local and remote stations and is indicated by a red light labeled HIGH ALARM on 1C22, by a mimic light on 1C22H, and by a master Radiation Monitor Panel alarm on 1C17.

Should an alarm condition exist at the **CONTROL ROOM VENTILATION SUPPLY RADIATION MONITOR** (0-RE-5350), the following actions occur automatically:

- the Control Room ventilation system outside air dampers shut;
- post-LOCI fans 11 and 12 start;
- the post-LOCI filter dampers open; and
- the Control Room, kitchen, and toilet exhaust fans stop.

These actions start a self-contained recirculation system which circulates the Control Room air through prefilters, absolute filters, and a charcoal filter bed to ensure continued usability of the Control Room during an emergency situation.

3.2.12 Main Steam Effluent Radiation/N-16 Monitor System

The purpose of the **MAIN STEAM LINE/N-16 RADIATION MONITOR SYSTEM** is to monitor possible noble gas releases to the atmosphere from the main steam line through the steam dump to the atmosphere, the main steam safety relief valves, and/or the auxiliary feedwater steam turbine exhausts and to detect N-16 leaking to the secondary coolant. The Main Steam Line/N-16 Radiation Monitor System includes four radiation monitors (1/2-RIT-5421/5421A and 1/2-RIT-5422/5422A located in the Cable Spreading Room and 1/2-RIC-5421/5421A and 1/2-RIC-5422/5422A located in the Control Room) for

each unit. A single radiation monitor system for each steam generator. The Main Steam/N-16 Monitor is unique in that it uses a single detector mounted in the MSIV room on the 27 foot level of the Auxiliary Building under the main steam line as close to the containment penetration as physical constraints allow. This arrangement allows a single monitor to provide indication of radiation levels exiting the steam dump to the atmosphere, the main steam safety relief valves, and/or the AFW steam turbine exhausts.

The radiation detector is a Gamma Scintillation type, it consists of a mu-metal shield, a 2 inch diameter x 2 inch thick Bismuth Germanate (BGO) crystal optically coupled to a 2 inch photomultiplier tube mounted as an integrated assembly into a stainless steel housing. The output of the detector, which is porportional to the effluent activity level, is fed to a preamplifier located in the cable spreading room. The local ratemeter and N-16 monitor are microprocessor controlled units. There is one ratemeter and one N-16 monitor for each Main Steam line. The microprocessors computes the effluent activity level and indicates the activity level in units of R/hr on the rate meter display for the Main Steam and in Gallons per day on the N-16 monitor. These are tied to a ratemeter and N-16 monitor located in the Control Room via a com cable.

3.2.12.1 Main Steam Effluent Radiation/N16 Monitor System Rate Meters

The **RATE METER** assemblies contains the electronics and power supplies necessary for the monitoring, controlling, alarming, and recording functions of the Main Steam Effluent Radiation/N16 Monitor System. The assemblies are installed in the Control Room in panel 2C26 and the Cable Spreading Room.

The local Rate meter (ADM-616) is located in the Cable Spreading Room. It is a microprocessor controlled digital ratemeter, designed to power, operate, and monitor three detector channels.

The ADM-616 provides the following user interface features:

- 2 row by 20 character vacuum fluorescent display
- six position membrane switch panel
- three position key switch
- alarm, failure and normal visual indicators

The remote Ratemeter (ADM-606) is located in the Control Room. It is a microprocessor controlled digital ratemeter slaved to the local ADM-616. The ADM-606 is connected to the local ADM-616 via a communications bus. The ADM-606 continually communicates with the local ratemeter to obtain status conditions and rate information.

The ADM-606 provides the following user interface features:

- 2 row by 20 character vacuum fluorescent display
- six position membrane switch panel
- three position key switch
- alarm, failure and normal visual indicators

The Preamplifiers (PA-300E and PA-300E (V5)) are located in the Cable Spreading room. The Preamplifiers are identical except that the High Voltage Control Board assembly is replaced to enable the PA-300E (V5) to be used with detector cables in the range of 50 to 200 feet and gamma fields up to 1E+5 R/H. The PA-300E (V5) is used to monitor the Main Steam Line Monitor and the PA-300E is used to monitor the N-16.

A recorder records the current level of radiation in the steam line monitor system. The level of radiation recorded corresponds to the reading on the rate meter display.

Table 5-6 lists the controls, indications, and alarm functions of the rate meter

4.0 GENERAL SYSTEM OPERATION

4.1 Theory Behind System Design

The Radiation Monitoring System serves to warn plant personnel of increasing radiation levels in various plant areas and provide early warning of a plant malfunction which may result in a radiological health hazard. The process radiation monitors are provided to assure that plant effluents are released in accordance with 10 CFR 20, Appendix B requirements, while the area radiation monitors read and record beta-gamma radiation levels in selected areas throughout the station and alarm (audible and visual) if these levels exceed a preset value or if the detector malfunctions. The RMS System, together with the various waste processing systems, is designed to maintain radioactive releases to the environment at levels under all operating conditions less than those given in Table II of 10 CFR 20, Appendix B.

Detector ranges and sensitivities are chosen to enable monitoring within the requirements of 10 CFR 20 and the access control zoning. The alarm setpoint of each area monitor is variable, and is set at a level sufficiently above the normal background radiation level in the respective area (normally 1-1/2 times background) to minimize the occurrence of spurious trips. The setpoints for the containment area monitors are far below the dose rates that would result from a postulated fuel handling incident.

The liquid waste discharge, steam generator blowdown, and the main vent gaseous radiation monitoring systems measure and control effluent releases within the design objectives as described in Appendix I to 10 CFR 50. The liquid waste and steam generator monitors must be in operation during liquid releases from these pathways and are used to automatically terminate the release should the setpoint be reached, and to estimate the quantity of radioactive material discharged as a backup to laboratory analyses. Release of expected volumes of liquids below the monitor setpoints provides assurance that design objective release limits and technical specification requirements are not exceeded.

Since all potentially radioactive gaseous effluents except the Turbine Building ventilation are directed to the main vents, the main vent effluents contain or may contain radioiodine or radionuclides in particulate form. The main vent monitoring systems consist of gaseous monitors, and charcoal cartridge iodine collection devices. The iodine collecting devices are used to demonstrate compliance with effluent release limits for iodine by counting the cartridge with the laboratory gamma spectroscopy system or by in-line monitoring by the WRGM System.

Release of radioactive gases from the plant below the main vent gaseous monitor setpoints provides assurance that design objective release limits and technical specification requirements for noble gases are not exceeded. The output from these monitors is summed and logged by the plant computers and is used as an aid for estimating the total release of noble gases from the plant and documentation of compliance with all regulatory requirements. Other gaseous monitors, such as gaseous waste discharge and condenser air removal are also used to estimate and/or verify the total release of gaseous activity and to provide indication of the failure of system radiological boundaries.

The Radiation Monitoring System detects any release of high airborne activity to the containment structures or the Auxiliary Building, and alarms in the Control Room. Upon receipt of a high radiation alarm from the RMS, the on-duty shift personnel initiate an investigation of and attempt to control the source of the radioactivity and its release path to the environment. In-plant graphic and computer recorders and indicators provide actual plant parameter records from which back calculations are made giving the total amounts of radioactivity released from the plant during the entire duration of the release.

All process, effluent, and area monitoring systems have remote visual/audible alarm and visual meter indication at the detector location, plus Control Room alarm, meter indication, and recording. Several of the process and effluent monitor signals are also supplied to the plant computers. Each monitor is provided with a solenoid-operated check source to verify detector response. All instrument channels are also

provided with electronic test features which, together with the solenoid-operated check sources, provide the operator with a convenient means to routinely check instrument function and response.

The calibration procedure entails exposing the detector of each monitoring system to a known quantity of radiation in a constant and reproducible geometry. By using portable calibration equipment, it is possible to calibrate the entire instrument channel from the detector to the Control Room. Radioactive sources used in the portable calibration equipment are selected so that two calibration points check the detector and instrument response.

4.2 Operating Procedure

Operating Instructions OI-35, OI-44 and OI-48 are the governing procedure for radiation monitoring system operation.

4.3 Radiological Event/Radioactivity Release

The Radiation Monitoring System serves as a useful tool for determining whether an emergency condition exists at the plant. An emergency is any situation that may result in undue risk to health and safety of the public and/or site personnel or significant damage to plant equipment. The four classes of emergency action levels are:

- Unusual Event,
- Alert,
- Site Emergency, and
- General Emergency.

The criteria for each of these emergency action levels are defined in ERPIP 3.0

5.0 SYSTEM SUMMARY TABLES

Table 5.1 Area Radiation Monitors

Unit	Tag	Area Description	Location
0	0-RE-7016	Misc. Waste Receiver Tank	Room 113
0	0-RE-7017	Miscellaneous Waste Pump	Room 110
0	0-RE-7018	Waste Gas Equipment Room	Room 208
0	0-RE-7019	Decontamination Room	Room 210
0	0-RE-7020	Spent Fuel pool Heat Exchanger Room	Room 320
0	0-RE-7021	Solid Waste Processing Area	Room 418
0	0-RE-7022	Liquid Waste Evaporator Room	Room 420
0	0-RE-7023	Chemistry Lab	Room 523
0	0-RE-7024	Spent Fuel Pool area	Room 530
0	0-RE-7025	Spent Fuel Pool Cask Handling Area	Room 530
0	0-RE-7026	New Fuel Storage Area	Room 533
0	0-RE-7027	Gas Analyzer Equipment Room	Room 111
1	1-RE-7004	#11 ECCS Pump Room	Room 119
1	1-RE-7005	#12 ECCS Pump Room	Room 118
1	1-RE-7006	U-1 NSSS Sampling Room	Room 424
1	1-RE-7010	Boric Acid Storage Tank	Room 217
1	1-RE-7011	West Piping Penetration	Room 221
1	1-RE-7012	S/G Blowdown Tank	Room 429
2	2-RE-7004	#21 ECCS Pump Room	Room 101
2	2-RE-7005	#22 ECCS Pump Room	Room 102
2	2-RE-7006	U-2 NSSS Sampling Room	Room 413
2	2-RE-7010	Boric Acid Storage Tank	Room 215
2	2-RE-7011	West Piping Penetration	Room 211
2	2-RE-7012	S/G Blowdown Tank	Room 408

Table 5-2 Containment Area Radiation Monitor

Unit	Tag	Description
1	1-RE-5316A	CRS sensor channel ZD
1	1-RE-5316B	CRS sensor channel ZE
1	1-RE-5316C	CRS sensor channel ZF
1	1-RE-5316D	CRS sensor channel ZG
1	1-RE-5317A	Containment High Range Area Monitor, ZA (Post Accident indication)
1	1-RE-5317B	Containment High Range Area Monitor, ZB (Post Accident indication)
2	2-RE-5316A	CRS sensor channel ZD
2	2-RE-5316B	CRS sensor channel ZE
2	2-RE-5316C	CRS sensor channel ZF
2	2-RE-5316D	CRS sensor channel ZG
2	2-RE-5317A	Containment High Range Area Monitor, ZA (Post Accident indication)
2	2-RE-5317B	Containment High Range Area Monitor, ZB (Post Accident indication)

Table 5-3 Process and Effluent Radiation Monitors

Unit	Tag	Description
0	0-RE-2191	Waste Gas Decay Tank Discharge
0	0-RE-2201	Liquid Waste Discharge
1	1-RE-5415	U-1 Main Vent Noble Gas Monitor
1	1-RE-5416	U-1 Wide Range Noble Gas Monitor (WRNGM) low range channel
1	1-RE-5417	U-1 Wide Range Noble Gas Monitor (WRNGM) mid range channel
1	1-RE-5418	U-1 Wide Range Noble Gas Monitor (WRNGM) high range channel
1	1-RE-1752A	#11 CAR Suction Radiation Monitor
1	1-RE-1752B	#12 CAR Suction Radiation Monitor
1	1-RE-1752C	#13 CAR Suction Radiation Monitor
1	1-RE-1752D	#14 CAR Suction Radiation Monitor
1	1-RE-4014	U-1 S/G Blowdown Monitor
1	1-RE-4095	U-1 S/G Blowdown Recovery Monitor
1	1-RE-5280	Containment Atmosphere Particulate Monitor
1	1-RE-5281	Containment Atmosphere Noble Gas Monitor
1	1-RE-1595	Service Water Radiation Monitor
1	1-RE-3819	Component Cooling Radiation Monitor
1	1-RE-5421	#11 Main Steam Line /N-16 Monitor
1	1-RE-5422	#12 Main Steam Line /N-16 Monitor
2	2-RE-5415	U-2 Main Vent Noble Gas Monitor
2	2-RE-5416	U-2 Wide Range Noble Gas Monitor (WRNGM) low range channel
2	2-RE-5417	U-2 Wide Range Noble Gas Monitor (WRNGM) mid range channel
2	2-RE-5418	U-2 Wide Range Noble Gas Monitor (WRNGM) high range channel
2	2-RE-1752A	#21 CAR Suction Radiation Monitor
2	2-RE-1752B	#22 CAR Suction Radiation Monitor
2	2-RE-1752C	#23 CAR Suction Radiation Monitor
2	2-RE-1752D	#24 CAR Suction Radiation Monitor
2	2-RE-4014	U-2 S/G Blowdown Monitor
2	2-RE-4095	U-2 S/G Blowdown Recovery Monitor
2	2-RE-5280	Containment Atmosphere Particulate Monitor
2	2-RE-5281	Containment Atmosphere Noble Gas Monitor
2	2-RE-1595	Service Water Radiation Monitor
2	2-RE-3819	Component Cooling Radiation Monitor
2	2-RE-5421	#21 Main Steam Line /N-16 Monitor
2	2-RE-5422	#22 Main Steam Line /N-16 Monitor

Table 5-4 Air Monitors

Unit	Tag	Description
0	0-RE-5350	Control Room Ventilation Supply
1	1-RE-5406	Unit 1 ECCS Pump Room Ventilation Exhaust
2	2-RE-5406	Unit 2 ECCS Pump Room Ventilation Exhaust
1	1-RE-5410	Unit 1 Waste Processing Area Ventilation Exhaust
2	2-RE-5410	Unit 2 Waste Processing Area Ventilation Exhaust
0	0-RE-5420	Fuel Handling Area Ventilation Exhaust
0	0-RE-5425	Access Control Area Ventilation Exhaust

Table 5-5
Control Room Panel IC22 Radiation Monitor Layout

UNIT 1				COMMON				UNIT 2			
A		B		C		D		E		F	
1RI-7004	1RI-7005			0-RI-7017	0-RI-7016	0-RI-2191	0-RI-5420	2-RI-7004	2-RI-7005		
1RI-7006		1-RI-5415		0-RI-7019	0-RI-7018	0-RI-5425	0-RI-5350	2-RI-7006		2-RI-5415	
1RI-7012				0-RI-7021	0-RI-7020			2-RI-7012			
1RR11				0RR11				2RR21			
1-RI-3819			1-RI-5410	0-RI-7023	0-RI-7022	0-RIC-2201		2-RI-3819			2-RI-5410
1RI-7010	1RI-7011	1-RI-5406	1-RI-1595	0-RI-7025	0-RI-7024			2RI-7010	2RI-7011	2-RI-5406	2-RI-1595
1-RI-5316A	1-RI-5316B	1-RI-5316C	1-RI-5316D	0-RI-7026	0-RI-7027			2-RI-5316A	2-RI-5316B	2-RI-5316C	2-RI-5316D

Table 5-6
Control Room Panel IC22G Radiation Monitor Layout

1-RI-1752A	1-RI-1752B		2-RI-1752A	2-RI-1752B
1-RI-1752C	1-RI-1752D		2-RI-1752C	2-RI-1752D
1-RIC-4095	1-RIC-4095 Bypass Module		2-RIC-4095	2-RIC-4095 Bypass Module
1-RIC-4014	1-RIC-4014 Bypass Module		2-RIC-4014	2-RIC-4014 Bypass Module
1-RIC-5280	1-HS-5278		2-RIC-5280	1-HS-5278

Table 5.7
Control Room Panel 2C24B Radiation Monitor Layout
(Left Side)

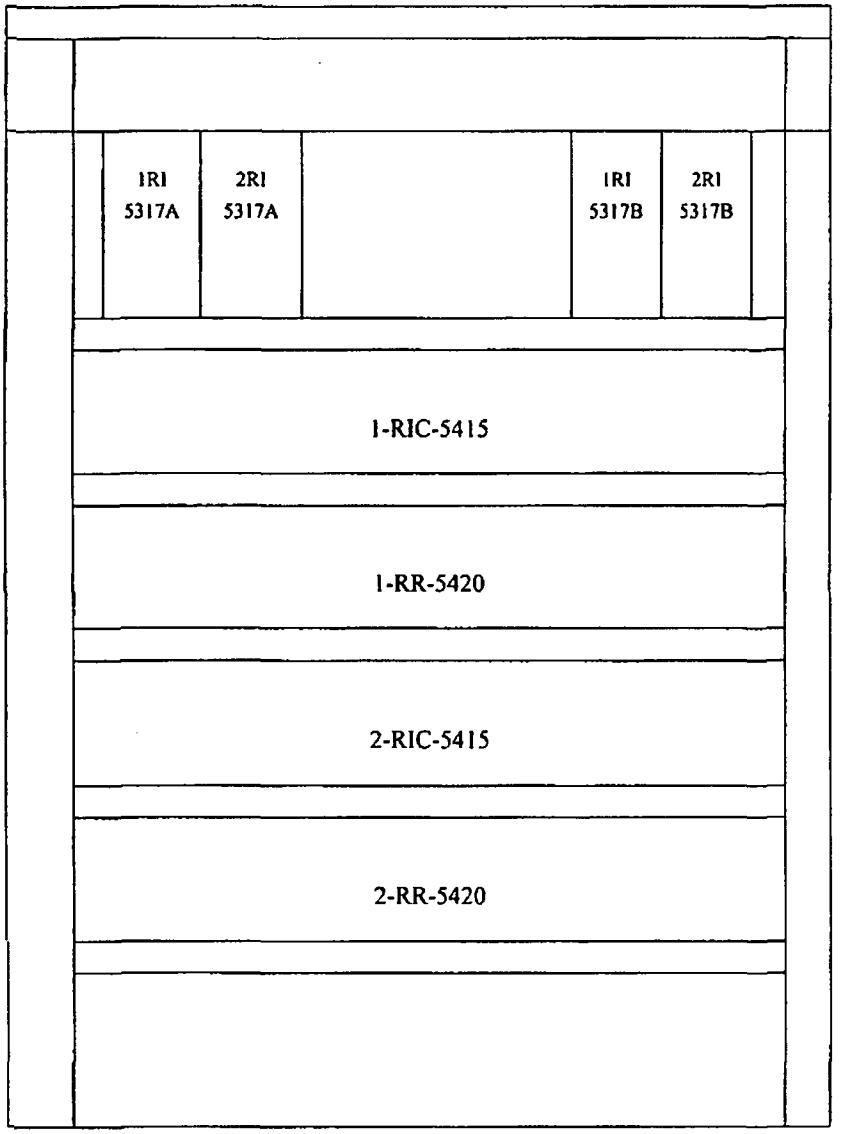

Table 5.8
Control Room Panel 2C24B Radiation Monitor Layout
(Right Side)

1-RIC 5421		1-RIC 5421A
1-RIC 5422		1-RIC 5422A
2-RIC 5421		2-RIC 5421A
2-RIC 5422		2-RIC 5422A

Unit 2 RCP Vibration

6.0 REFERENCES

Controlled Drawing	
P&ID	60738 SH0001 through SH0003
Technical Specification and Technical Requirements Manual	**Related Channels**
T.S. 3.3.7 - Containment Radiation Signal	1(2)-RE-5316A 1(2)-RE-5316B 1(2)-RE-5316C 1(2)-RE-5316D
T.S. 3.3.8 – Control Room Recirculation	0-RE-5350
T.S. 3.3.10 – Post Accident Monitoring	1(2)-RE-5317A 1(2)-RE-5317B
T.S. 3.4.14 – RCS leak detection	1(2)-RE-5280 1(2)-RE-5281
T.N.C 15.3.1	1(2)-RE-5416 1(2)-RE-5417 1(2)-RE-5418 1(2)-RE-5421 1(2)-RE-5422
Operating Instructions	
OI-35	Radiation Monitoring System
OI-44	Process Radiation Monitoring System
OI-48	WRNGM
UFSAR	Section 11.1.3 Section 11.2.3
Vendor Technical Manuals	
Westinghouse Equipment	12733-075 12733-094 12733-105
Apteck NRC Equipment	12733-400 12733-401
Syncor (Victoreen Equipment)	12733-402
GA-ESI equipment (RM-2000)	12284-054
GA-ESI equipment (RM-80)	12284-010 12284-012 12284-013 12284-014 12284-015 12284-040

THIS DOCUMENT IS FOR INSTRUCTION AND INFORMATION ONLY.
IT IS NOT TO BE USED FOR PLANT OPERATIONS.

SPENT FUEL POOL AND COOLING

SYSTEM DESCRIPTION

SD-067/068

REVISION ~~2~~ 3 PMS 2/25/09

August 2007

Constellation Nuclear
Calvert Cliffs Nuclear Power Plant

PREPARED BY: Ron Cameron DATE: 8/21/07
System Engineer

APPROVED BY: L. Bauer DATE: 8/23/07
Principal Engineer

PLEASE DIRECT TO THE SUPERVISOR - OPERATIONS TRAINING
OR SYSTEM MANAGER, ANY RECOMMENDATIONS FOR IMPROVEMENTS
TO THIS SYSTEM DESCRIPTION.

TABLE OF CONTENTS

1.0 Purpose 1

2.0 General Description 1

2.1 Structure and System Components 1

2.1.1 Spent Fuel Pool 1
2.1.2 SFP Cooling and Purification System 2

2.2 System Interrelationships 3

3.0 Detailed Description 5

3.1 Spent Fuel Pool Construction and Operation 6

3.1.1 Spent Fuel Pool Structure 6
3.1.2 Spent Fuel Racks 7
3.1.3 Refueling Equipment Associated with the SFP 9
3.1.4 Refueling Process 11

3.2 SFP Cooling and Purification System Construction and Operation 12

3.2.1 Spent Fuel Pool Cooling System 12
3.2.2 Spent Fuel Pool Purification System 14
3.2.3 Refueling Pool 17
3.2.4 Refueling Water Tank 18
3.2.5 Connecting Piping and OtherSystem Interfaces 19

3.3 Preventive Maintenance Procedures Summary 20

3.4 Power Supplies 21

4.0 General System Operation 21

4.1 Design Basis of the Spent Fuel Pool and the SFP Cooling and Purification System 22

4.1.1 Loss of SFP Water 23
4.1.2 Mechanical Damage to Fuel 24
4.1.3 Limiting Offsite Exposures 25

4.2 Design Basis for the Spent Fuel Racks 26

4.3 Thermal and Reactivity Design Characteristics of the Spent Fuel Pool, Spent Fuel Racks, and the SFP Cooling and Purification System 26

4.3.1 Heat Generation and Heat Removal in the SFP 27
4.3.2 Reactivity Control 28

4.4 Surveillance Test Procedures Summary 30

4.5 Theory of System Operation 30

TABLE OF CONTENTS

(Continued)

4.6 Operating Instruction 24 Summary Spent Fuel Pool System 31

4.6.1 Normal Operation 31
4.6.2 Minimum SFP Cooling (One Loop Operation) 32
4.6.3 FP Recirculation 32
4.6.4 Cooling Assistance from the Safety Injection System 33
4.6.5 SFP Purification 33
4.6.6 Filling the Refueling Pool 34
4.6.7 Lowering Refueling Pool Level 35
4.6.8 Cooling the Refueling Pool 36
4.6.9 Purifying the Refueling Pool 37
4.6.10 Purifying the Refueling Water Tank 38
4.6.11 Demineralizer Operations 39

4.7 Changes to the SFP/SFPCPS 40

5.0 System Design Characteristics 41

6.0 References, Drawings, and Sources of Additional Information 47

Appendix 50

LIST OF TABLES

Table 5-1 SFP Cooling and Purification System 41

Table 5-2 Technical Data for SFP Cooling and Purification System Pumps and Heat Exchangers 42

Table 5-3 Technical Data for SFP Cooling and Purification System Filter, Demineralizer, and Piping 43

Table 5-4 SFP Cooling and Purification System Instrument Locations 44

Table 5-5 SFP Cooling and Purification Preventive Maintenance Requirements 45

Table 5-6 Spent Fuel Pool Limiting Conditions for Operation (LCO) 46

Table 6-1 Spent Fuel Pool and Spent Fuel Pool Cooling and Purification Systems References 48

Table 6-2 Facility Change Requests (FCRs/ESPs) 49

LIST OF FIGURES

Figure -1 Plan View of 27-foot Level

Figure -2 Spent Fuel Pool Cooling and Purification System Simplified Diagram

Figure -3 SFP Barrier Wall Looking North from Pool 21

Figure -4 Elevation Through Unit-1 Looking North

Figure -5 SFP Floor

Figure -6 Spent Fuel Rack Configuration

Figure -7 Conceptual Drawing of Cross-Section of Spent Fuel Rack

Figure -8 Elevation Through Unit-1 Looking East, Upender Area

Figure -9 Elevation Through Unit-1 Looking East, Rack Area

Figure -10 Exponential Decay of an Isotope

Figure -11 Spent Fuel Pool Cooling and Purification System Piping Diagram

Figure -12 SFP Purification Equipment Piping Diagram

Figure -13 Spent Fuel Pool Cooling and Purification System Power Distribution

Figure -14 Spent Fuel Pool Cooling Room West Wall

Figure -15 Spent Fuel Pool Cooling Room 12 HX West Side

1.0 Purpose

The primary purpose of the spent fuel pool is to maintain the spent fuel assemblies in a safe storage condition. A secondary purpose is to provide a means for underwater fuel handling operations, including the transfer of new fuel into the containment.

The primary purpose of the Spent Fuel Pool Cooling and Purification System is to remove decay heat from the spent fuel stored in the spent fuel pool. Secondary purposes include:

- Provide cooling for refueling pools
- Maintain clarity and activity levels in the spent fuel pool, refueling pools, and refueling water tanks
- Transferring water to and from refueling water tanks as needed

2.0 General Description

2.1 Structure and System Components

The spent fuel pool (SFP) provides a storage place for the fuel assemblies. The SFP Cooling and Purification System cools and purifies the water in the SFP. Each of these subsystems is discussed separately in Subsections 2.1.1 and 2.1.2.

2.1.1 Spent Fuel Pool

The SFP is a large rectangular structure which holds the spent fuel assemblies from the reactors in both units (see Figure 1). Borated water fills the SFP and completely covers the spent fuel assemblies. The SFP is constructed of reinforced concrete and is lined with a stainless steel plate which serves as a leakage barrier. A dividing wall separates the SFP, with the north half being associated with Unit-1 and the south half associated with Unit-2. A slot in the dividing wall has removable gates which allow movement of fuel assemblies between the two halves of the pool. The SFP is located in the Auxiliary Building between the two containment structures. During refueling operations, the spent fuel pool the spent fuel pool is connected to the refueling pool in the containment by a water-filled canal called the fuel transfer tube. The fuel transfer tube is the only SFP penetration below the waterline.

2.1.1 Spent Fuel Pool (Continued)

Each half of the SFP is equipped with spent fuel racks installed on the pool bottom. The spent fuel racks are constructed of stainless steel and consist of vertical cells grouped in sections that are a specified distance apart. Each cell holds one fuel assembly in a vertical position and allows cooling water flow around the assembly. Inserted in each of the four sides of the cell are plates of a material that contains boron, a neutron absorber. The spacing of the cells and the boron in the cell walls help maintain the fuel assemblies subcritical. Subcriticality of the fuel assemblies is maintained by the presence of borated water in the SFP. The water also serves as a heat transfer medium to cool the fuel assemblies and provides radiation shielding for personnel working adjacent to the pool.

2.1.2 SFP Cooling and Purification System

The assemblies in the SFP are cooled by the Spent Fuel Pool Cooling and Purification System (SFPCPS). The SFPCPS is a closed loop system consisting of two heat exchangers (also called SFP coolers), a filter, a demineralizer, two pumps, valves, and instrumentation (see Figure 2). After shutdown of the reactor, radioactive nuclides present in the spent fuel assemblies decay, producing heat referred to as decay heat. This decay heat is removed by the SFPCPS, which pumps water from the SFP to a cooler for heat removal and to a filter and demineralizer for removal of solids and reduction of radioactivity in the water. The SFPCPS pumps the cooled and purified water back to the SFP.

The normal configuration for the cooling system is one pump/one cooler loop in operation on each half of the spent fuel pool to cool the water. The purity and clarity of the water is maintained by passing a portion of the flow through the purification system. The purification system consists of a filter to remove insoluble particulates and a demineralizer (ion exchanger) which removes soluble ions. Skimmers are provided in the spent fuel pools to remove accumulated dust and debris from the surface of the water

2.1.2 SFP Cooling and Purification System (Continued)

The spent fuel pool cooling system equipment is located on the Auxiliary Building centerline on the 27-foot level (refer to Figure 1) in rooms adjacent to the Units-1 and -2 spent fuel pools. The filter and the demineralizer have their own rooms, and the pumps and coolers share a large room called the SFP Cooling Room.

The two pumps are centrifugal pumps operated from handswitches in the Control Room. The pumps have pressure indicators on their discharge, and a low discharge pressure alarm notifies the Control Room Operator of a pump failure. The spent fuel pool coolers are of the straight-tube type. Cooling is provided by the Service Water System. Their purpose is to transfer the heat from the SFP water in the tubes to the service water on the shell side.

Flow through the purification system is usually controlled by a throttle valve on the discharge side of the heat exchanger. The filter is a cartridge-type which is replaced if the differential pressure across the filter indicates it needs cleaning. The demineralizer uses a mixed bed resin. A wye strainer on the outlet of the demineralizer traps any resin particles in the discharge flow from the demineralizer.

2.2 System Interrelationships

The SFP has a major system interface with the Refueling Equipment System (System 081). The Refueling Equipment System consists of components and equipment used in moving the fuel from the time of new fuel receipt to the time of spent fuel storage and subsequent dry fuel storage or shipment off-site. Some of the refueling equipment components are physically located in the SFP and other components are used to perform fuel movement operations above the pool. Located in the spent fuel pool are:

- new fuel elevator, for lowering new fuel into the pool;
- Unit-1 and -2 upenders, for tilting the fuel assembly for movement through the fuel transfer tube;

2.2 **System Interrelationships (Continued)**

- Unit-1 and -2 transfer carriages, for transporting the fuel assembly through the fuel transfer tube;
- Unit-1 and -2 mechanisms for operating the transfer carriage (structural base, rails, cables, etc.); and
- Spent Fuel Inspection Elevator for inspecting irradiated fuel underwater with the periscope or underwater cameras.

Located around the spent fuel pool are:

- spent fuel handling machine,
- portable spent fuel platform (also called the sleeving platform),
- Unit-1 and -2 transfer carriage hydraulic power units and winch systems, and
- the new fuel storage area.

The SFPCPS has major and minor interfaces with other systems. Major interfaces are with the Unit-1 and -2 refueling pools, the refueling water tanks (RWT) in the Safety Injection System (SIS), and the Service Water (SRW) System. A minor interface is with the shutdown cooling heat exchangers in the SIS.

The refueling pools are reinforced concrete structures lined with stainless steel that, when filled, forms a pool above the reactor vessel (see Figure 11). The empty structure is sometimes referred to as the refueling cavity. To prevent leakage of water from a refueling pool, the top head flange of the reactor vessel is sealed to the concrete structure. The refueling cavity is filled with borated water at the same concentration as the Reactor Coolant System water to provide shielding and reactivity control during fuel transfer operations. The refueling pool is filled from and drained to the RWT via the SFP pumps. As an alternate method, the low pressure SIS pumps may be used to perform this transfer. An additional 10,000 gallons of water must be dumped from the Safety Injection Tanks to completely fill the refueling pool to refueling level (67'). The SFP purification equipment is used to process the refueling pool water if it becomes necessary.

2.2 **System Interrelationships (Continued)**

The RWT (one per unit) is a vertical, cylindrical, stainless steel tank which stores borated water used to fill the refueling cavity during refueling. The tank also stores the water that must be available during operation for safety injection and containment spray (400,000 gallons) and for backup charging pump supply. Makeup to the RWT is provided by aligning the Chemical and Volume Control System (CVCS) Makeup System to blend demineralized water and boric acid to the Reactor Coolant System (RCS) concentration and fill the RWT. The SFP pumps can transfer water in either direction: from the RWT to the refueling pool or from the refueling pool to the RWT. The RWT's contents may also be processed through the SFP purification system and recirculated back to the RWT.

The SRW System supplies the cooling water for the SFP heat exchangers. If cooling is not necessary, the cooling water supply is shut off by shutting the SRW inlet valves on the coolers.

Temporary connections (using removable spool pieces, which are normally installed) are provided to join the SIS to the SFP cooling piping. The purpose of these temporary connections is to utilize one of the shutdown cooling heat exchangers to assist in cooling the spent fuel pool or the refueling pool. An example of a situation that would require cooling assistance is the offload of an entire reactor core into the SFP.

3.0 Detailed Description

This section describes, in detail, the spent fuel pool, the components and subsystems that comprise the SFP Cooling and Purification System, the operational interface that exists between SFP and SFPCPS and the other plant systems, and other information that ensures safe and reliable operation of the system. Subsection 3.1 describes the SFP spent fuel racks, and refueling equipment located in the SFP. Subsection 3.2 describes the components and flow paths of the SFPCPS. Subsection 3.3 describes the preventive maintenance requirements (PMRs) associated with the spent fuel pool and with its cooling and purification system. Subsection 3.4 describes the electrical power supplies to the SFPCPS.

3.1 Spent Fuel Pool Construction and Operation

Subsections 3.1.1 and 3.1.2 discuss the construction of the SFP and the SFP racks. In addition, the purposes of the SFP may be more clearly understood by discussing the SFP's role in the refueling process. Therefore, the individual pieces of refueling equipment that are either located in or connected to the SFP are briefly discussed in Subsection 3.1.3, and Subsection 3.1.4 provides a brief description of the refueling process.

3.1.1 Spent Fuel Pool Structure

The **SPENT FUEL POOL** is located in the Auxiliary Building between the two containment structures (refer to Figure 1). Designed in two identical sections separated by a 3 1/2 foot thick dividing wall, the pool is constructed of reinforced concrete and lined with 3/16 inch stainless steel. Each half of the pool is 54 feet long, 25 feet wide and approximately 39 feet deep (the floor elevation varies). The SFP walls and floor are 5 1/2 or 6 feet thick, depending on the location.

The dividing barrier wall has an opening in it called the **TRANSFER SLOT** that allows a fuel assembly (held vertically by the spent fuel handling machine) to pass from one half of the pool to the other. The slot is closed by stainless steel bulkhead gates. The transfer slot is 2 feet wide and cuts through the barrier wall to a depth corresponding to an elevation of 42 feet 8 inches (see Figure 3).

The SFP stainless steel liner is 3/16 inch thick and serves a dual purpose. It serves as a leakage barrier and simplifies decontamination in the event the pool has to be drained and entered.

The SFP floor elevations vary. Figure 4 is an elevation looking north in the Unit-1 SFP. The floor under the spent fuel cask area is lower so that the spent fuel assemblies may be placed in the cask while still maintaining the required minimum water level above the fuel assemblies. The floor under the spent fuel racks is at the 30-foot elevation. In the fuel upender area, the floor elevation is 29 feet 6 inches. Figure 5 is a plan view of the SFP floor with the elevations shown. On each side of the barrier wall is a small piping trough 18 inches wide, 8 feet 6 inches long, and 6 inches deep.

3.1.1 **Spent Fuel Pool Structure (Continued)**

On the Unit-2 side of the pool, this trough and the area formerly designated as the cask laydown area were filled in to accommodate high density spent fuel racks for that unit. This area may also be seen on Figure 3.

The SFP is normally filled with borated water to a level of 67 feet. The pool overflows at a level of 67 feet 3 inches to the Auxiliary Building gravity drains. The SFP is equipped with a temperature switch and a level switch in each half that both actuate the same alarm (SFP Level Temp Hi) on Control Room panel 1C13 (see Table 5-1). Temperature switch 0-TS-2201 (-2202) has both high and low setpoints of 471.5 inches and 462 inches, respectively. Ten skimmers maintain water clarity by removing dust and debris from the surface of the pool.

The SFP contains racks for storage of the spent fuel assemblies, space in the Unit-1 half for the fuel shipping cask, and various pieces of refueling equipment. The borated water which fills the SFP has a concentration of 2300 parts per million (ppm) of boron. Boron absorbs neutrons emitted by the spent fuel and thus helps maintain the spent fuel subcritical. The water in the pool also provides radiation shielding for personnel around the pool. Water circulates around the fuel assemblies via natural circulation to remove decay heat from them. The SFP water, above the top of the fuel racks is circulated and cooled by the SFPCPS.

3.1.2 **Spent Fuel Racks**

The **SPENT FUEL RACKS** are vertical, stainless steel cells grouped in parallel rows in the SFP. The spent fuel racks are installed in sections or modules as shown on Figure 6. The Unit-1 half of the pool contains:

- six 10 by 10 arrays,
- two 8 by 10 arrays, and
- one 7 by 10 array.

The Unit-2 half of the pool contains ten 10 by 10 arrays. The total fuel assembly capacity of the SFP is 1830 assemblies. Each spent fuel rack section is attached to embedments in the concrete subflooring.

3.1.2 **Spent Fuel Racks (Continued)**

They are laterally braced to one another and supported so that a reduction in the separation space (center-to-center spacing) does not occur, even during an earthquake. The racks are designed not to collapse or bow under the force of a dropped fuel assembly.

The **FUEL RACK CELLS** are individual double-walled containers approximately 14 feet long. The inner wall of each cell is made from a 0.06 inch thick sheet of stainless steel formed into a square cross-section container, indented on the corners, with an inside dimension of 8.56 inches. The outer, or external, wall is also formed from a stainless steel sheet 0.06 inches thick. Plates of borated, neutron absorbing material are inserted between the two walls, in each of the four spaces formed by the indentations in the inner wall. The plates are made of a boron carbide (B_4C) composite material and are 6.5 inches wide by 0.09 inches thick. Each plate contains at least 0.024 grams of boron-10 per square centimeter of plate. Figure 7 shows a conceptual drawing of a cross-sectional view of four cells. The spacing between the cells is maintained at 10 3/32 inches, center to center, by external sheets and welded spacers. The boron plate inserts help maintain the spent fuel assemblies in a subcritical condition. The B_4C material in the Unit 1 racks is called carborundum and the B_4C material in the Unit 2 racks is called boraflex. Boraflex has degraded to the point where CCNPP stopped taking credit for the material to act as a neutron absorber. As a result, the Tech Specs and UFSAR were revised to take credit for soluble boron added to the Unit 2 SFP to maintain criticality. Boraflex is a silica rubber based material. High radiation levels around the fuel cause the rubber to harden and release silica into the SFP water. Silica levels must be limited to prevent adverse crud deposits and related corrosion effects. The BARS Silica Removal Skid uses reverse osmosis to remove silica from the water. The reverse osmosis process slowly lowers SFP boron concentrations requiring boric acid additions periodically. Keeping SFP water temperature at or below 90°F minimizes silica release.

3.1.3 Refueling Equipment Associated with the SFP

The SFP is connected to the north and south ends of the Units-1 and -2 containments, respectively, by means of **FUEL TRANSFER TUBES** (see Figure 8). The fuel transfer tube, the only penetration in the SFP below the normal water level, passes through the containment wall and connects to the refueling cavity in the containment. The fuel transfer tube penetration consists of a 36-inch diameter stainless steel tube inside a 42-inch diameter stainless steel penetration sleeve. The two concentric tubes are sealed to each other by a bellows-type expansion joint. During refueling operations, the tube becomes an underwater canal that connects the refueling pool and the SFP. During plant operations, the fuel transfer tube is closed in the SFP by a 36-inch stainless steel parallel slide gate valve. Inside the containment, the fuel transfer tube is sealed with a double O-ring blind flange. The refueling pool/fuel transfer tube/SFP arrangement allows the entire refueling process to occur under water.

Unit-1 and-2 **FUEL TRANSFER CARRIAGES** transport fuel assemblies that have been loaded into the fuel carriers between the refueling pools (RFP) and the SFP. The fuel transfer carriages ride on rails mounted on base-mounts in the SFP and RFP and welded into the transfer tube (see Figure 8). A gap is left in the tracks on each end of the transfer tube to allow isolation of the tube. The fuel transfer carriage wheels are off-set by approximately 3 feet to provide a smooth transition across the rail gaps. Stainless steel wire cables in the SFP connect the carriage to the driving winch which is mounted on the 69-foot level at the edge of the SFP (the cables are not shown in Figure 8).

Two upending machines, or **UPENDERS,** per unit; one in the refueling pool and one in the SFP; tilt the fuel carrier to either the vertical position for loading/unloading fuel assemblies or horizontal for travel through the transfer tube.

The **SPENT FUEL HANDLING MACHINE** (SFHM) is a bridge and trolley machine that runs above the SFP on Rails at the 69 foot 10 inch elevation (see Figures 4 and 8). The SFHM serves both halves of the SFP. A hoist, mounted on the trolley, supports a handling tool used for grappling the fuel assemblies.

3.1.3 Refueling Equipment Associated with the SFP (Continued)

The upper limit of hoist travel is such that sufficient water level remains above the fuel assembly to provide adequate shielding (see Figure 9). When the SFHM passes over the barrier wall separating the two halves of the SFP, the trolley with its hoist assembly must be positioned over the slot in the wall in order to pass through.

The **NEW FUEL** and **SPENT FUEL ELEVATORS** were originally installed to lower new fuel from the operating floor at the top of the SFP to the bottom of the SFP – Unit specific loading (see Figure 1). The elevator in the Unit-2 side has been modified to allow it to be used for inspecting irradiated spent fuel underwater with the periscope or underwater cameras. The spent fuel inspection elevator only has guides / lead-ins at the top and bottom so extra care must used when inserting or removing fuel from this elevator to avoid excessive rubbing or binding of the fuel bundle. Before the refueling process begins, the new fuel assemblies are moved one at a time by the Auxiliary Building hoist from the new fuel storage area to the new fuel elevator. Holding the assembly in a vertical position, the elevator lowers the assembly into the SFP to the level of the fuel in the racks. At this point the SFHM picks up the fuel assembly and places it in the designated racks.

The **SPENT FUEL PLATFORM,** also called the sleeving platform, is a portable work surface 16 feet long and 4 feet wide. The platform provides a work surface over the SFP primarily for repair of worn guide tubes in the fuel assemblies. The platform may be attached to either the west wall of the north pool or the east wall of the south pool.

New fuel is removed from its shipping container by the auxiliary hook attached to the spent fuel pool crane and is transferred to the **NEW FUEL STORAGE RACKS**. This storage area is for both units No. 1 and No. 2. These dry storage racks are constructed to provide storage for 2/3 of a core and a maximum enrichment of 5.0 WT % u-235 for the new fuel assemblies. The new fuel will be

3.1.3 **Refueling Equipment Associated with the SFP (Continued)**

subjected to a maximum temperature of 110°F and a minimum temperature of 60°F. If there is space in the spent fuel pool, new fuel may be stored there. The New Fuel Storage maintains shutdown margin by physical separation (rack spacing) and drainage. The storage area is above grade with floor drains to ensure no water accumulates.

3.1.4 **Refueling Process**

A secondary system purpose of the SFP is to provide a means for underwater fuel handling operations. A brief description of the refueling process is provided below. Additional information on the refueling process is provided in System Description 081, Refueling Equipment. Prior to the start of the refueling operations, the Auxiliary Building overhead crane moves a new fuel assembly from the new fuel storage racks to the new fuel elevator. The elevator lowers the assembly and the SFHM places it in the racks. During refueling, the SFHM transfers a new fuel assembly from the racks to the transfer carriage on the SFP upender. The upender rotates the carriage from a vertical to horizontal position. The transfer carriage moves inside the fuel transfer tube, carrying the assembly from the SFP to the refueling pool. Inside the refueling pool, the upender returns the assembly to the vertical position. The reactor refueling machine then picks the assembly up and places it into the reactor core.

Approximately 40% of the 217 fuel assemblies in the reactor core are removed at each refueling and placed in the SFP. The reactor refueling machine removes a spent fuel assembly out of the reactor vertically and places it in the upended transfer carriage in the refueling pool. The upender located in the refueling pool lowers the transfer carriage to the horizontal position on the fuel transfer tube rails. The transfer carriage moves inside the transfer tube, carrying the assembly from the refueling pool to the SFP. Inside the SFP, the SFP upender turns the carriage, and the fuel assembly inside the carriage, from the horizontal to the vertical position. The SFHM takes the assembly out of the carriage and places it in the spent fuel racks.

3.2 SFP Cooling and Purification System Construction and Operation

The Spent Fuel Pool Cooling and Purification System is composed of equipment and piping that may be divided into two subsystems by function: the SFP cooling system and the SFP purification system. These two subsystems and the plant equipment they serve are the subject of the following subsections. Subsections 3.2.1 through 3.2.3 cover the normal flow path. Subsections 3.2.4 through 3.2.5 discuss the alternate system flow paths.

3.2.1 Spent Fuel Pool Cooling System

After shutdown of the reactor, the radioactive nuclides in the fuel continue to decay exponentially (see Figure 10) producing heat, referred to as decay heat. The decay heat generation rate decreases with time in a pattern similar to Figure 10. The water in the spent fuel pool provides shielding, cooling, and reactivity control for the fuel assemblies.

The heat generated by the spent fuel in the spent fuel pool water is removed by circulating the pool water through heat exchangers to cool the water and then returning the cooled water to the pool. The amount of heat and radiation being generated by the spent fuel decreases with time after being removed from the reactor. Thus the demand for heat removal capability on the spent fuel cooling system is greatest when the spent fuel is newly offloaded from the reactor.

The cooling system for the spent fuel pool has two pumps and two heat exchangers. Normally, pump 11 and cooler 11 service spent fuel pool 11; and pump 12 and cooler 12 service spent fuel pool 12. However, these can be cross connected so that any combination of a pump and cooler can be used to cool either half of the spent fuel pool.

The water is drawn out of the spent fuel pool (refer to Figure 11) by the suction action of the pump. It is drawn through two pipes which later join into one. Located in the two pipes are manual suction valves. Should the pool level be extremely low, a third suction line (not shown on

3.2.1 Spent Fuel Pool Cooling System (Continued)

Figure 11) takes suction at a point below the fuel transfer tube elevation, but this line is normally kept locked shut.

The water then passes through two valves (SFP-193 and SFP-194) whose purpose is to permit a cross connect with the other loop. A cross connect line containing cross connect valve SFP-197 taps off between SFP-193 and SFP-194. The water then passes through a pressure point, the pump suction valve, and another pressure point before entering pump 11 (pump 12's flow path is similar). See Figure 14 for Suction Header.

The **SPENT FUEL POOL PUMPS** are centrifugal pumps having mechanical seals. Each pump has a capacity of 1390 gpm with a 100 HP motor. The pumps are controlled from Control Room panel 1C13 by handswitches 0-HS-1994 (pump 11) and 0-HS-1995 (pump 12) that have three positions: START, STOP, with a spring return to NORMAL. The handswitches have a PULL-TO-LOCK feature also. Additional pump data is provided in Table 5-2. SFP Pump #11 is powered from 480V Bus 14, Breaker 52-1411, and SFP #12 Pump is powered from 480V Bus 24, Breaker 52-2411.

The pump is provided with a vent valve, SFP-104 (-108), for venting the pump. On the discharge side of the pump, there is pressure indicator 0-PI-1994 (-1995), check valve SFP-102 (-106), and pump discharge valve SFP-103 (-107). The pump discharge valve must be two turns open before starting the pump (in accordance with manufacturer's instructions), and then throttled opened. Normal discharge pressure is between 100 and 145 psig. Next in the flow path is pressure switch 0-PS-1994 (-1995), which has an associated alarm on panel 1C13 with a setpoint of 70 psig (SFP Cooling PPS Disch Press Lo).

After the pressure switch, flow passes to pump discharge vent SFP-110 (-112). This vent is normally closed and is used to vent the system after starting the pump to transfer water from the refueling water tank. The water then flows through heat exchanger inlet valve SFP-114 (-119). Temperature indicators are

3.2.1 **Spent Fuel Pool Cooling System (Continued)**

provided on the inlet and outlet of the heat exchangers. These indicators are 0-TI-2003 inlet (-2005), located on the south end of the heat exchanger and 0-TI-2004 outlet (-2006), located on the north end of the exchanger.

The heat exchangers, sometimes called **SPENT FUEL POOL COOLERS,** have horizontal straight tubes over which the cooling service water flow is in a counter flow direction. The heat exchanger shell is carbon steel, but the tubes and tubesheets are stainless steel. Each cooler has a heat transfer area of 1920 square feet, and can transfer 10.1 million Btu/hr of heat. Additional heat exchanger data is given in Table 5-2. Temperature switch 0-TS-1997 (-1998) on the outlet causes an audio-visual alarm to actuate in the Control Room if the outlet temperature reaches 110°F. This alarm (SFP Cooler Disch Temp Hi) is on panel 1C13. A relief valve also on the cooler outlet line relieves at 150 psig to a drain. The flow then passes through cooler outlet valve SFP-115 (-120), outlet throttle valve SFP-155 (-150), SFP distribution header inlet valve SFP-156 (-151), and back into the spent fuel pool (see Figure 15 Distribution Header). A line containing cross connect valve SFP-124 connects the cooler outlet lines just downstream of the cooler outlet valves. The piping for the flow path just described has an outer diameter of 8 inches.

3.2.2 **Spent Fuel Pool Purification System**

The purification system (see Figure 12) for the spent fuel pool has a filter and a demineralizer. The clarity and purity of the water in the SFP is maintained by passing a portion of the flow from the cooling system through the purification system. The outer diameter of piping for the purification system is only 4 inches. Purification is connected to one pump/one cooler loop at a time. In the normal cooling configuration, which is two coolers and two pumps in operation, purification is not done.

The first component flow passes through in the purification system is a flow element. This flow element sends signals to two flow indicators. The first,

3.2.2 Spent Fuel Pool Purification System (Continued)

0-FIS-1999, is located on the 27-foot level on the east wall across from the boric acid batching tank (refer to Figure 1). It has an associated audio-visual alarm on Control Room panel 1C13 that activates on a low flow of 105 gpm (SFP Dem Flow Lo Diff Press Hi). The second associated flow indicator is 0-FI-1999, located on the west wall of the SFP Cooling Room. The flow should not exceed 120 gpm because excessive flow could damage the demineralizer. Filter inlet valve SFP-129 and outlet valve SFP-130 are normally open. A filter bypass valve, SFP-131, is provided to allow isolation of the filter. A differential pressure indicator for the filter, 0-PDIS-1999, is located on the east wall outside the SFP Filter Room (see Figure 1). The differential pressure indicator actuates an alarm on Control Room panel 1C13 at a high level of 35 psid (SFP Filter Diff Pressure Hi). A high differential pressure on the filter indicates that it may be "dirty" or clogged, and requires replacement.

The **SFP FILTER** is a cartridge-type filter designed for 128 gpm, although usually operated at 120 gpm. Its design pressure and temperature are 175 psig and 250°F, respectively. Its filter rating is 0.45 micron, which means it traps a particle larger than 0.45 micron (about 0.000018 inch). The filter tank is made of stainless steel. The filter is located in its own shielded room located between the elevator and the SFP on the 27-foot level refer to Figure 1).

The flow next passes through the **SFP DEMINERALIZER.** Like the filter, the demineralizer has a normally open inlet valve (SFP-136) and outlet valve (SFP-137); a bypass valve (SFP-139); and a differential pressure indicator (0-PDIS-2000). The pressure indicator is located on the east wall outside the shielded SFP Filter Room (see Figure 1). The associated alarm is an audio-visual alarm on Control Room panel 1C13 whose high differential pressure setpoint is 15 psid (SFP Dem Flow Lo Diff Press Hi). This alarm is the same one that was actuated by 0-FIS-1999, as discussed earlier.

3.2.2 **Spent Fuel Pool Purification System (Continued)**

In addition, the demineralizer has a wye **STRAINER,** 0-YS-2001, on its outlet than can be flushed, as required, to the Solid Waste Processing System via flush valve SFP-211. The strainer removes dislodged resin beads from the purification flow. The wye strainer also has its own differential pressure indicator 0-PDI-2001, located on the east wall of the hall on the 27-foot level opposite boric acid batching tank 11. The demineralizer, which has its own cubicle on the 27-foot level, also has connections so that its resin may be replaced. The demineralizer is made of stainless steel with a capacity of 36 cubic feet. Like the filter, it is designed for 128 gpm, but normally operates at 120 gpm. It is usually filled with a mixed bed resin. Additional data on the filter and demineralizer is provided on Table 5-3, and Table 5-4 provides the instrument locations.

During the operations of resin transfer and resin fill, the purification flow must be bypassed around the demineralizer by opening its bypass valve, and shutting its inlet and outlet valves. The demineralized water supply valve to the demineralizer is opened to serve as sluice water. The demineralizer is pressurized with nitrogen, and the contents of the demineralizer is discharged to the **SPENT RESIN METERING TANK** in the Solid Waste Processing System via the demineralizer's resin discharge valve, SFP-208. The demineralizer is flushed with demineralized water, and fresh resin is mixed in the **RESIN ADDITION TANK** and transferred to the demineralizer. The resin addition tank is mounted on wheels and is stored on the 45-foot level. It is used to mix resin for the CVCS ion exchangers and the Reactor coolant Waste Processing System ion exchangers, as well as for the SFP demineralizer. The resin is transferred through a hole in the floor on the 45-foot level by a flexible connection from the resin addition tank through demineralizer fill valve SFP-213.

The demineralizer is also equipped with three flow glasses to monitor the purity of the flows to and from it. These are:

3.2.2 **Spent Fuel Pool Purification System (Continued)**

- 0-FG-2000, the vent flow glass, located in the overhead in the northeast corner of the SFP Cooling Room;
- 0-FG-2001, the resin transfer line flow glass, located in the northwest corner of the SFP Cooling Room; and
- 0-FG-2003, the demineralized water inlet flow glass, located in the northwest corner of the SFP Cooling Room.

After leaving the demineralizer, the purification flow rejoins the cooling system flow to SFP 11 by way of SFP-147 (or to SFP 21 by way of SFP-148).

3.2.3 **Refueling Pool**

The SFP Cooling and Purification System may also be aligned to process or transfer the water in two other places; the refueling pool and the refueling water tank. The **REFUELING POOL,** part of the Refueling Equipment System, is formed when the refueling cavity around the upper portion of the reactor vessel is filled with water. The normal water level of the refueling pool is 67 feet, the same as for the SFP. The refueling pool overflows to the containment normal sump at a level of 67 feet 3 inches. There are no permanent instruments on the refueling pool, but it is equipped with two skimmers for removal of surface debris. Borated water from the RWT is transferred by the SFP (or SIS) pumps to fill the pool. After refueling operations are complete, the water in the refueling pool is returned to the RWT. During refueling operations, the SFP Cooling and Purification System may be aligned to cool, to purify, or to do both to the refueling pool water.

The actual valve alignments for the various operations are discussed in Subsection 4.6 and will not be discussed here. However, a general description of the refueling pool connections will be discussed. Because the bottom of the refueling pool is higher on the north side (south for pool 21), there are two sets of drain pipes with valves that are normally locked shut. The higher cavity is drained by opening SFP-172 (-180) and the lower cavity by opening SFP-174

3.2.3 **Refueling Pool (Continued)**

(-182). Both drain pipes join into one and pass outside the containment, where SFP-189 (-186), the refueling pool 11 (21) combined outlet, must be opened. Drainage flow next passes through butterfly valve SFP-190 (-187) (SFP pump suction from refueling pool). The piping then joins into the SFP suction header (from the SFP).

On the return side of the SFP cooling system, the return flow to the SFP may be diverted to the refueling pool by opening refueling pool supply valves SFP-157 (-149), 170 (-178), and -171 (-179) and shutting the corresponding SFP distribution header inlet. The case where the refueling pool is to be pumped to the refueling water tank instead of back to the refueling pool is discussed in the next subsection.

3.2.4 **Refueling Water Tank**

The RWT, one per unit, is part of the Safety Injection System. It provides the borated water that the high and low pressure safety injection pumps inject into the RCS in the event of loss of coolant. The RWT also supplies water for the Containment Spray System. The SIS flow path to the reactor vessel is through a safety injection nozzle for each of the four RCS cold leg pipes. The RWT has various instrumentation and its own heating system to keep the boric acid in solution, which are discussed in System Description 7, Safety Injection and Containment Spray System. For purposes of this system description, the RWT may be viewed as just a water storage tank.

The RWT is located on the west outside corner of the Auxiliary Building. It is a large (42 feet in diameter) vertical, cylindrical tank with a capacity of 420,000 gallons. In non-emergency situations, the RWT provides the storage location for the water from the refueling pool. The SFP cooling pumps can transfer water in either direction: from the RWT to the refueling pool or from the refueling pool to the RWT.

3.2.4 Refueling Water Tank (Continued)

The low pressure SIS pumps can perform the same water transfer function when the reactor vessel head is removed by discharging into the RCS loops and then into the refueling cavity via the open reactor vessel. When transferring the water in the other direction, however, the SIS cannot drain the refueling pool below the level of the reactor vessel nozzles. The SFP pumps must take over at that point.

Water from the RWT is supplied to the SFP pump inlet header by:

- stopping the SFP pump to be used
- shutting off the pump suction from the SFP (or refueling pool); and
- opening the suction valve for the pump from the RWT, SFP-192 (-188).

Because the RWT suction supply line joins into the SFP supply lines, either unit's RWT can be cross connected to either SFP pump just as the spent fuel pools can be cross connected.

Return of the water to the RWT from either the cooling system or the purification system is possible. From the cooling system, SFP-156 (-151) (SFP distribution header inlet valve) is shut, and SFP-147 (purification discharge valve to SFP 11) and SFP-146 (purification discharge valve to RWT 11) are both opened. (For the Unit-2 RWT, the corresponding valves to open are SFP-148 and SFP-145). If the return of the water to the RWT is to be made from the flow exiting the purification system, only valve SFP-146 (-145) must be opened.

3.2.5 Connecting Piping and Other System Interfaces

Provision is made to cross connect a shutdown cooling heat exchanger in the SIS to augment the SFP cooling system. Such a provision is necessary in the event that there is insufficient cooling of the SFP while in the normal cooling lineup (two pump/two cooler configuration). The situation in which this might occur is if the entire core had to be offloaded into the spent fuel pool. A shutdown cooling heat exchanger alone has a heat removal rate of 27.3 million

Btu/hr, and in combination with the SFP cooling system, can remove 38.7 million Btu/hr.

3.2.5 Connecting Piping and Other System Interfaces (Continued)

The piping required to provide the cross connect is temporary and requires connecting up the spool pieces. The temporary connections to the shutdown cooling heat exchanger are located between pump suction valve SFP-194 (-199) and the pump. The return connections from the SIS tap into the piping lines between cooler outlet valve SFP-115 (-120) and cooler outlet throttle valve SFP-155 (-150). When SDC is used to augment a SFP cooling loop, that loop's SFP pump/cooler is removed from service.

3.3 Preventive Maintenance Procedures Summary

The purpose of this subsection is to summarize the preventive maintenance (PM) procedures that have been implemented to ensure that the SFP and the SFPCPS meet the design objectives outlined in the FSAR. **This descriptive information is for instructional purposes only and is not to be used as a source document for plant operations. Only procedures that are approved by the Plant Operations and Safety Review Committee (PORC)/Plant Superintendent and that are part of the Calvert Cliffs Operating Manual are to be used for plant operation.** Maintenance documentation should be consulted prior to performing the maintenance.

Routine maintenance is performed on the SFP Cooling and Purification System components. Principal periodic maintenance consists of:

- inspecting the spent fuel pool pump breakers;
- performing insulation test and DC resistance test on the SFP pump motors;
- performing calibration verification on the spent fuel pool cooler temperature instruments;
- performing calibration verification on the system pressure and flow instruments prior to refueling; and
- lubricating the SFP pump motor bearings, motor couplings, and pump bearings.

3.3 Preventive Maintenance Procedures Summary (Continued)

Table 5-5 provides a summary of the preventive maintenance requirements.

There are also operational preventive maintenance items, which include rotating SFP pumps once per month (PEO 0-067-01-O-M) and measuring SFP leakage. PEO 0-067-02-O-M, the SFP Leakage Test, involves attaching a bag to each SFP leakoff for 24 hours, measuring any water collected, and logging the results on the Unit-1 Control Room log. Performance of this PM is discussed in OI-24D.

3.4 Power Supplies

All valves in the SFP Cooling and Purification System are manual valves. The SFP cooling pumps are operated by handswitches 0-HS-1994 and 0-HS-1995 on Control Room panel 1C13. These pumps are powered from 480 VAC bus 14A (pump 11) and 480 VAC bus 24A (pump 12) as illustrated on Figure 13.

4.0 General System Operation

This section discusses the theory behind the design and operation of the spent fuel pool and the SFP Cooling and Purification System, and describes the operating instruction that has been written to guide the operator in the proper use of the system. Subsection 4.1 discusses the design basis for the SFP and the SFPCPS. Subsection 4.2 discusses the design basis for the SFP racks. Subsection 4.3 discusses thermal and reactivity design characteristics. Subsection 4.4 discusses the plant technical specifications that apply to the SFP and SFPCPS. Subsection 4.5 discusses the theory of operation of the SFPCPS and Subsection 4.6 discusses system operating instructions and procedures. Subsection 4.7 discusses the changes made to the SFP and SFPCPS.

4.1 Design Basis of the Spent Fuel and the SFP Cooling and Purification System

Plant features classified as seismic Category I are those plant structures, systems, and components important to safety which are required to withstand the effect of an earthquake and remain functional. These plant features are those necessary to assure the integrity of the pressure boundary, the capability to shut down, or the capability to prevent or reduce the consequences of accidents which could result in potential offsite exposures in excess of those allowable. The SFP and SFPCPS are designed as seismic Category I because they satisfy the last of these criteria.

The SFP/SFPCPS design was based on three design requirements:

- prevent loss of water from the SFP that would uncover fuel,
- protect the fuel from mechanical damage, and
- provide the capability for limiting offsite exposures in the event of significant release of radioactivity from the fuel.

The SFPCPS is designed so that when the pool contains the spent fuel from normally scheduled refueling offloads, the heat generation rate of the fuel does not exceed the heat removal capabilities of the spent fuel cooling system, which is 20.2 million Btu/hr. In the event that the entire core has to be offloaded into the pool, the shutdown cooling heat exchanger of the unit from which all fuel was removed can be cross connected to augment the SFP cooling system. This does not pose a problem because, even with no heat removal at all, there is a period of several hours after offloading the entire core before pool boiling would occur. This is adequate time to get the shutdown cooling heat exchanger cross connected.

4.1.1 Loss of SFP Water

The most serious failure of the system would be the loss of the water in the spent fuel pool. Without the water for cooling, the spent fuel assemblies could become hot enough for a cladding failure or melt down, either event resulting in the release of radioactive materials to the environment. Natural events such as earthquakes, tornadoes, or hurricanes could cause direct damage to the pool structure. In accordance with seismic Category I requirements, the SFP and SFPCPS are designed to withstand the maximum calculated vibratory ground motion of an earthquake.

Other measures that assure leak tightness of the SFP are the use of a stainless steel liner plate and the absence of any penetrations in the pool walls below the normal water level (with the exception of the fuel transfer tube). This second feature prevents inadvertent draining or gravity draining of the pool. Siphon breakers prevent gravity draining through the existing connections above the normal water level.

Even with the precautions described, small leaks may still occur in the SFP. Early detection of pool leakage and prompt replacement of water is essential. Early leakage detection is assured by a surveillance which requires that the minimum pool level be verified at least once every 7 days. In practice, level is checked once every 12 hours as required by the Auxiliary Building log sheets. In addition, a level alarm keeps the Control Room Operator aware of level changes. PEO 0-067-02-O-M (SFP Leakage Test) requires a regular check for leakage, as well (see Subsection 3.3).

Prompt replacement of water loss due to leakage prevents the fuel from being uncovered. Makeup water can be supplied, via the SFP Cooling and Purification System, from the refueling water tanks or the Demineralized Water System (see Subsection 4.3 for spent fuel criticality analyses).

4.1.2 Mechanical Damage to Fuel

The release of radioactive material from the spent fuel assemblies can occur during the refueling process, or at other times, as a result of mechanical damage to the fuel cladding. Such mechanical damage can be the result of missiles (generated internally and externally to the plant) striking the fuel, heavy items being dropped onto the fuel assemblies, or the fuel assembly itself being dropped.

Missiles generated externally to the plant could be from high winds (tornadoes or hurricanes). Missiles generated internally to the plant could be from the malfunction or structural failure of plant equipment, such as the turbine generator. Internal and external missile protection is provided by the 6 foot thick SFP walls. In addition, a 2 foot thick concrete missile barrier positioned at the 118-foot elevation protects the SFP from a high trajectory missile generated by a turbine overspeed incident. For additional information, refer to FSAR chapter 14.

Storms or earthquakes could also cause heavy items (structures, cranes, etc.) to fall into the pool. The main concern is dropping a fuel shipping cask or a heavy load being carried by a crane in the vicinity of the spent fuel racks. These two events are guarded against by two technical specifications that forbid:

- any load over 1600 pounds from being transported over the spent fuel assemblies, or
- the spent fuel shipping cask from travel over any area within one shipping cask length of any fuel assembly.

The 1600 lbs figure is the weight of a fuel assembly containing a control element assembly (CEA). The racks are designed to safely withstand the drop of this load. If the cask were dropped, the distance of one cask length assured that the stored spent fuel assemblies are not damaged. Analyses have shown that the integrity of the SFP floor would not be impaired by the cask drop.

4.1.2 **Mechanical Damage to Fuel(Continued)**

The analysis of a fuel assembly dropped into the SFP during fuel handling is the subject of FSAR section 14.18 and Abnormal Operating Instruction (AOP) 6D (both entitled "Fuel Handling Incident"). The FSAR analysis showed that the radiation doses measured at the exclusion boundary will not exceed the limits established by the Code of Federal Regulations.

4.1.3 **Limiting Offsite Exposures**

A small amount of mechanical fuel damage could cause significant offsite doses. However, several plant dose reduction features are provided to limit offsite exposures. These features are:

- SFP minimum level requirement,
- heat removal from the SFP,
- SFP area radiation monitor, and
- SFP area ventilation system.

The technical specification of minimum SFP level ensures that sufficient depth exists to provide radiation shielding in the event of a fuel assembly rupture. Another plant feature which helps reduce offsite doses is the cooling of the water in the spent fuel pool by the SFPCPS. If the SFP water was allowed to boil, much more particulate radioactivity would be released to the atmosphere from the damaged fuel. Early detection of fuel damage is provided by the radiation monitor in the SFP area. Radiation monitor alarms are provided locally and in the Control Room.

Actuation of the radiation monitor alarm also actuates the SFP ventilation system. A technical specification limit on the SFP ventilation system ensures that radioactive material released from a ruptured irradiated fuel assembly are filtered through the high efficiency particulate activity (HEPA) filters and charcoal absorbers prior to being discharged to the atmosphere. Refer to System Description 43, the Ventilation System, for additional information.

4.2 Design Basis for the Spent Fuel Racks

The spent fuel pool at Calvert Cliffs Nuclear Power Plant was originally designed to hold one refueling offload plus one entire core offload. It was anticipated that one refueling offload would be kept in the spent fuel pool for a specified "cooling off" period (approximately one year) and then shipped off-site for reprocessing. The remainder of the SFP space was reserved in case the full core had to be offloaded. Currently, no fuel reprocessing is being done and no off-site spent fuel storage facilities have been approved. Calvert Cliffs must therefore store refueling offloads in the SFP. The spent fuel pool is large enough to allow storage of additional spent fuel assemblies, particularly with the addition of the high density spent fuel racks. These racks compensate for the criticality problems of the more compact storage by lining the partitions with boron carbide. Unit 2 no longer takes credit for the born carbide material, boralfex that resides in between the racks. The boraflex has degraded overtime, and therefore soluble boron is now added to maintain criticality. Boron absorbs neutrons given off by the fuel. The maximum fuel enrichment to be stored in the spent fuel pool is 4.1 WT % 235 for irradiated fuel assemblies and 5.0 WT % 235 for unirradiated assemblies.

The fuel racks are also designed seismic Category I. In addition, the racks are capable of safely withstanding the fuel handling incident of a dropped fuel assembly. The assumptions made and results of the analysis for this incident are discussed in FSAR Chapter 14 and in System Description 13, Refueling Equipment.

4.3 Thermal and Reactivity Design Characteristics of the Spent Fuel Pool, Spent Fuel Racks, and the SFP Cooling and Purification System

The SFP and the spent fuel racks are designed to provide cooling water flow around the spent fuel assemblies and to maintain the assemblies in a geometrically safe storage configuration. Subsection 4.3.1 discusses the thermal considerations and Subsection 4.3.2 discusses the reactivity considerations for the fuel storage configuration.

4.3.1 Heat Generation and Heat Removal in the SFP

After shutdown of the reactor, the radioactive nuclides in the fuel continue to decay exponentially, producing decay heat. The decay heat generation rate decreases with time. After the spent fuel assemblies are placed in the spent fuel racks, water flow through the racks and around the fuel assemblies removes decay heat. The SFP water is then cooled and processed by the SFPCPS. Water flow through the fuel assemblies themselves and through the racks is promoted by spacers and flow holes.

Without sufficient cooling, the temperature of the fuel assemblies could increase to the point where a fuel cladding failure or meltdown could occur. Either event could result in the release of fission products to the atmosphere. The SFPCPS is designed so that the decay heat generation rate of the spent fuel in the pool does not exceed the heat removal capacity of the SFPCPS.

To justify the installation of the high density fuel storage racks and the storage of additional spent fuel in the pools, the utility estimated the heat generation rates in the pools when they were full. The Nuclear Regulatory Commission must approve each storage proposal. There were two basic heat loads considered:

- The maximum normal heat load case considers that the pool contains normal refueling offloads added at the scheduled times up to the point where the pool is full, except for space reserved for the full core offload. This is the maximum heat load due to normal refuelings.
- The core offload case considers that the pool already contained the maximum normal heat load, plus an entire core has been offloaded (the pool is now full).

The SFP cooling system must be able to accommodate the maximum normal heat loads. Supplemental cooling is allowed for the core offload case, since it is not a frequent or expected occurrence.

4.3.1 Heat Generation and Heat Removal in the SFP (Continued)

For Calvert Cliffs, the maximum normal heat load from both units into the common spent fuel pool is less than the heat removal capability of the SFP Cooling System, which is 20.2 million Btu/hr. The heat load due to the core offload case, however, may exceed the heat removal capacity of the SFP cooling system. In this situation, the shutdown cooling heat exchanger of the unit from which the core has been removed can be cross connected to help cool the pool. The shutdown cooling heat exchanger alone has a heat removal capability of 27.3 million Btu/hr. When the spent fuel cooling system is supplemented by the shutdown cooling heat exchanger, the heat removal rate is 38.6 million Btu/hr.

4.3.2 Reactivity Control

As the radioactive nuclides in the fuel continue to decay after reactor shutdown, neutrons are produced. A term called the effective multiplication factor (k_{eff}) is defined as the ratio of the neutron population in each generation to that in the preceding operation. A k_{eff} less than one defines a condition where a nuclear reaction cannot be sustained (subcritical). Design features that affect the value of the k_{eff} in the SFP are separation distance between the fuel assemblies, shielding between the assemblies, and the presence of a neutron absorber in the SFP water.

With the installation of the high density racks in the SFP, the distance between the fuel assemblies is decreased. However, this reduction in lattice spacing is offset by boron carbide material inserts between the U-1 fuel assemblies and soluble boron in the Unit 2 pool, so the k_{eff} in the SFP remains 0.95 or below. This assures that the spent fuel stored in the SFP remains in a subcritical condition.

The presence of boron in the SFP water is an additional reactivity control feature. Credit for the borated water was not considered in the original criticality calculations for the racks. The normal 2300 ppm boron concentration in the SFP water provides additional neutron absorbing capability to further maintain the spent fuel in a subcritical condition.

4.3.2 Conitnued

Reactivity Control Design Features:

SFP Rack: Each Rack has B_4C neutron absorbing material between storage cells. This means adjacent cells have two such sheets, one for each cell wall. On cells with no adjacent cell (outside rows) there is only one layer of poison (B_4C). These outside cells have a bumper welded on to provide additional spacing to compensate for the reduced poison thickness.

Fuel Elevators: Each fuel elevator has a bumper design which prevents another assembly being moved by the SFHM from coming closer than ~10 inches to the assembly in the elevator. .

Fuel Transfer Carrier: The spacing between carrier cells provides some measure of criticality protection but there are no design features on this equipment which guarantee shutdown margin. Therefore, this equipment relies on refueling boron concentration to ensure against criticality.

Dry Storage Canisters (DSC): These are used for dry fuel storage. The close spacing of fuel in these canisters relies on boron concentration for shutdown margin until all water is removed later during the dry fuel storage process.

New Fuel Storage Area: The storage cells are above grade to prevent any flooding concerns. Additionally the room has drains. Without water to moderate neutrons, it is very difficult to start a nuclear reaction which would lead to criticality. Additionally, each rack is spaces apart. Even if a thermal neutron was present in the storage area, its travel is limited in air so this separation prevents a nuclear reaction between two assemblies.

4.4 Surveillance Test Procedures Summary

The purpose of this subsection is to summarize the surveillance test procedure (STP) and technical specifications that have been implemented to ensure that the SFP and the SFPCPS meet the design objectives outlined in the FSAR. Generally, STPs implement the technical specification Limiting Conditions for Operation (LCO). This is true for LCO 3.9.11, which addresses SFP water level limitations. However, there is one LCO associated with the SFP for which no specific STP has been assigned (see Table 5-6). This LCO address the movement of loads larger than 1600 pounds over fuel assemblies.

The restriction on minimum water level for the SFP provides adequate radiation shielding in the event of a ruptured fuel assembly. The requirements on cask travel assure that, if the cask should drop, it does not fall on and damage the fuel assemblies in the racks.

4.5 Theory of System Operation

The normal operational mode of the SFP Cooling and Purification System is the two pump/two cooler configuration without the purification equipment in operation. To place the system in this mode, the Service Water Systems for Unit-1 and Unit-2 must be operational to supply cooling water to the coolers. The service water inlet control valves are both opened, the pumps are started, and flow is adjusted by throttling the cooler outlet throttle valves. The system is returned to this normal configuration after completion of the other temporary lineups. Several months after a refueling offload, the fuel in the pool may have decayed enough (the heat generation rate has decreased) so that one pump/one cooler loop may be secured.

The SFP Cooling and Purification System may be aligned to perform various other operations such as replenish the SFP; transfer water to and from the refueling pools and RWTs; and purify the SFP, the RWT, the refueling pool, or the shutdown cooling flow. During most operations, however, at least on pump/one cooler loop is in operation for spent fuel pool cooling. These other operations are discussed further in Subsection 4.6.

4.6 Operating Instruction 24 Summary--Spent Fuel Pool Cooling System

This subsection describes the normal operating procedure that is associated with the SFP Cooling and Purification System. (The SFP is a structure, rather than a system, so there is no operating instruction associated with it). **The operating instruction (OI) is summarized here and is not to be used to operate the system. Only procedures which are approved by POSRC/Plant Superintendent and which are part of the Calvert Cliffs Operating manual are used for plant operation.** Operations for Unit-1 and/or loop 11 will be discussed. Unit-2 and/or loop 12 is operated similarly, and the OI provides the corresponding valve numbers.

4.6.1 Normal Operation

To start up the SFP cooling system to the two pump/two cooler operation, the valves in the system are lined up to the startup position on the valve lineup sheets. The Unit-1 and Unit-2 Service Water Systems are in operation, the SFP pumps are not running, and both pools are at normal levels.

Cooling water flow to the SFP coolers is established by opening the service water inlet valves to SFP cooler 11 (1-SRW-1597-CV) and to cooler 12 (1-SRW-1599-CV). Because of the precautionary requirement that the discharge valve be shut when starting an SFP pump, the discharge valves are shut on both pumps (SFP-103 on pump 11; SFP-107 on pump 12) and the pumps are started with their handswitches in the Control Room. The pump discharge valves are then reopened. The pump discharge pressure and the cooler outlet temperatures are checked locally to ensure proper flow on:

Pump/Cooler 11	Pump/Cooler 12
0-PI-1994	0-PI-1995
0-TI-2004	0-TI-2006

Flow may be adjusted by throttling the cooler outlet throttle valves (SFP-155 and SFP-150).

4.6.1 **Normal Operation (Continued)**

To start up the SFP cooling system for only one pool the steps are the same as outlined in the preceding paragraph except the barrier gate between the two spent fuel pools is closed and only the pump and valves for SFP 11 or SFP 12 are operated.

4.6.2 **Minimum SFP Cooling (One Loop Operation)**

After the spent fuel has been in the SFP for awhile, the heat generation rate in the fuel drops off to the point that the temperature of the SFP can be maintained by one of the coolers and its associated pump. At that time, the system is changed from its normal operation (two coolers/two pumps configuration) to the minimum SFP cooling operation, which is one cooler/one pump operation. It must be determined which pump/cooler will remain in service and the desired suction/discharge line-up. OI-24A contains specific instructions for each possible line-up.

4.6.3 **SFP Recirculation**

If no heat removal is necessary, but the water in the pools must be kept moving around the spent fuel assemblies to prevent local heating, both coolers may be secured and one pump used to provide motive force. This type of operation is referred to as the recirculation mode. To move into recirculation mode, the SFP System must already be in the minimum SFP cooling mode (one cooler/one pump configuration). The cooler is then removed from service by shutting the service water inlet valve (1-SRW-1559-CV) to the cooler.

Similarly, to return from the recirculation mode to the minimum SFP cooling mode, the service water inlet valve (1-SRW-1599-CV) is opened. If additional heat removal is required, the system is shifted to the normal cooling mode (two coolers/two pumps) from the minimum cooling mode.

4.6.3 **SFP Recirculation (Continued)**

To shift from the minimum cooling mode (one cooler/one pump) to the normal cooling mode (two coolers/two pumps), the desired suction/discharge line-ups must be determined. Once determined, all system alignments must be made and the second pump/cooler placed in service per OI-24A.

4.6.4 **Cooling Assistance from the Safety Injection System**

In the event that an entire reactor core (217 fuel assemblies) has to be offloaded to the spent fuel pool, the heat generation rate from the fuel in the SFP may exceed the heat removal capability of the SFP cooling equipment. In this situation, one shutdown cooling heat exchanger in the unit whose core was off-loaded may be operated to supplement the SFP cooling system. The SFP Cooling and Purification System has temporary connections which, with the installation of spool pieces, permit cross connection with the SIS. The connections that go to the SIS are in the suction lines of the SFP pumps. The connections that return the cooled water from the SIS tap in downstream of the SFP coolers.

OI-3B provides the instructions for using the SDC system to supplement the SFP cooling system. If the desired suction/discharge of the Unit 1 SDC system is 11 SFP, 12 SFP cooling loop suction/discharge must be aligned to 21 SFP per OI-24A. OI-3B will direct the isolation of 11 SFP pump/cooler as well as SFP purification. The SDC system will then be aligned and throttled to achieve approximately 2000 gpm cooling flow to 11 SFP.

4.6.5 **SFP Purification**

Placing the purification equipment in service on loop 11 is accomplished in the following manner. The cooler outlet temperature, as read on TI-2004, must be less than 140°F to protect the demineralizer resin. The purification supply from SFP cooler 12 (SFP-128) is shut and cooler 11 outlet valve SFP-155 is checked to be throttled. The return valve from purification to loop 11 (SFP-147) is

4.6.5 **SFP Purification (Continued)**

opened. The purification supply from SFP cooler 11 (SFP-127) is slowly throttled open to initiate purification flow. Flow is read on FIS-1999 (in the 27-foot level hall on the east wall, across from the boric acid batching tank). The flow should be between 105 and 120 gpm. If flow is too low, cooler 11 outlet throttle valve SFP-155 may be throttled shut to induce flow through the purification system.

4.6.6 **Filling the Refueling Pool**

The SFP pumps may be used as the motive force to fill the refueling pool from the RWT. To fill the refueling pool from the refueling water tank, the following initial requirements must be met:

- SFP System is in the required line-up per the applicable section of OI-24G,
- refueling pool and applicable portions of refueling equipment have been inspected,
- RWT boron concentration and temperature have been verified,
- SFP barrier gate is open, and

The procedures for filling refueling pool 11 and refueling pool 21 are similar. If 11 RFP is to be filled, the SFP cooling system is required to be aligned with 12 SFP pump/cooler in operation with suction from 11 SFP and discharging to 21 SFP per OI-24A. The return line to the SFP from pump 11 is isolated by shutting the distribution header inlet valve, SFP-156. The pump discharge valve SFP-103 is shut in preparation for pump startup.

Suction and discharge are realigned to the RWT and the refueling pool as follows:

- open pump suction from RWT, SFP-192;
- throttle open refueling pool supply valve, SFP-157 four turns;

4.6.6 **Filling the Refueling Pool (Continued)**

- open refueling pool inlet (outside containment), SFP-171; and
- open refueling pool inlet (inside containment), SFP-170.
- vent the SFP pump.

Since the cooler will not be in use, service water flow to cooler 11 is stopped by shutting inlet valve 1-SRW-1597-CV. SFP-103 is throttled open two turns, the pump started and SFP-103 slowly opened. SFP-157 is then throttled to the desired discharge pressure of 105 - 120 psig.

The refueling pool is now being filled. When the pool reaches the desired level, pump 11 is stopped and placed in "Pull to Lock."

The fill is secured by performing the following steps (see OI-24G):

- shut pump suction valve from RWT, SFP-192;
- shut refueling pool supply valve, SFP-157;
- shut refueling pool inlet valve inside containment, SFP-170;
- shut refueling pool inlet valve outside containment, SFP-171;
- open SFP distribution header inlet valve to SFP 11, SFP-156;
- shut 11 SFP cooler inlet, SFP-114; and
- open the SFP pumps discharge cross connect, SFP-109.

4.6.7 **Lowering Refueling Pool Level**

Water can be transferred from refueling pool 11 using the SIS pumps until the water level is below the reactor vessel nozzles. At this point, the rest of the water is pumped out of the pool by the SFP pumps. The SFP barrier gate is open and the refueling pool isolated from the SFP (to prevent inadvertent SFP draining). Loop 11 is used to transfer the water from the refueling pool and loop 12 cools the SFP, with the cross connect valves aligned accordingly.

4.6.7 **Lowering Refueling Pool Level (Continued)**

For this case, cooler 11 is not needed, so the service water inlet valve is shut.

The outlet flow from pump/cooler 11 is routed to the RWT by shutting SFP-156 (SFP 11 distribution header inlet), and opening both SFP-147 and SFP-146 (purification discharge to RWT 11). Loop 12 is aligned for normal cooling of the SFP with no purification.

Since one side of the refueling cavity is higher than the other, it will go dry before the other. In the case of refueling pool 11, the higher side is the north side. Just before the north cavity goes dry, drain valve SFP-172 is shut. Opening the sump drain, which is in the drain line between the cavity and SFP-173 allows the remaining water out. The same procedure is performed on refueling pool 21 south cavity drains just prior to that cavity going dry. The SFP pump is stopped and not allowed to run dry. The pump/cooler loops and valves are then returned to the normal operating configuration.

4.6.8 **Cooling the Refueling Pool**

At certain times it may be necessary to cool both a refueling pool and the SFP at the same time. The SFP barrier gate must be open so that both SFPs are cooled. This discussion will briefly describe the lineup for pump 11/cooler 11 to cool refueling pool 11 and for pump 12/cooler 12 to cool the SFP. OI-24B should be consulted for a more detailed discussion.

Pump 11 is stopped and its handswitch is placed in the PULL-TO-LOCK position while the lineup is made. 12 SFP pump/cooler must be placed in operation with suction from 11 SFP and discharge to 21 SFP per OI-24A. Other system valves are realigned as follows:

- refueling pool supply valve, SFP-157, is opened;
- refueling pool supply valve (outside containment), SFP-171, is opened;
- refueling pool supply valve (inside containment), SFP-170, is opened;
- refueling pool 11 outlet valve SFP-174, is opened;

4.6.8 Cooling the Refueling Pool (Continued)

- refueling pool 11 combined outlet valve SFP-189 is opened; and
- pump 11 suction from refueling pool 11, SFP-190, is opened.

Pump 11 discharge valve SFP-103 is throttled open two turns while the pump is started, and then slowly opened. This completes the dual lineup.

To return from the dual refueling pool cooling and SFP cooling mode just described, to the normal SFP cooling, the following steps are taken. Pump 11 is stopped and its handswitch is placed in the PULL-TO-LOCK position while the lineup is secured per OI-24B. The system may then be aligned to the desired configuration per OI-24A.

At certain times it may be necessary to provide the refueling pool with more cooling than can be provided by the one cooler/one pump dual configuration. In this situation, there are two prerequisites: the fuel transfer tube for the refueling pool must be opened, and the SFP barrier gate is not installed. This lineup aligns both SFP pumps to cool the refueling pool. Cooled water flows to/from the refueling pool through the fuel transfer tube. The system can be aligned to cool the RFP with both SFP pumps using various flowpaths. These system manipulations are controlled by OI-24B.

4.6.9 Purifying the Refueling Pool

The refueling pool may be purified by lining up the pumps so that pump 11 takes suction on the refueling pool, cools the water, purifies the water, and returns it to the SFP. This is the same lineup as described in Subsection 4.6.8, except for the addition of purification. Pump 12 may be aligned to take suction and discharge from the SFP without purification or aid in RFP cooling. The refueling pool is replenished by the SFP since the fuel transfer tube is open. The various system line-ups are controlled per OI-24B.

4.6.10 Purifying the Refueling Water Tank

The situation may arise where the water in the RWT is in need of purification. This discussion will describe the purification operation for RWT 11. The RWT may be purified by using loop 11 (pump 11/cooler 11) to take suction on the RWT, route it through the purification system and back to the RWT. Loop 12 cools the SFP (with barrier gate open) in the meantime.

The SFP cross connect valves are aligned as follows (refer to Figure 11):

- Open: SFP-193, (pump 11 suction from SFP 11)
  SFP-197, (cross connect for pump suction)
  SFP-199, (pump 12 suction from SFP 21)
- Shut: SFP-194, (pump 11 suction from SFP 11)
  SFP-198, (pump 12 suction from SFP 21)

This sends SFP water to pump 12 and allows RWT water to flow to pump 11 when SFP-192 (pump 11 suction from RWT 11) is opened. Part of the outlet flow from cooler 11 is routed to the purification system and the rest is sent back to the RWT by shutting SFP-156 (SFP 11 distribution header inlet), and opening both SFP-147 (purification discharge to SFP 11) and SFP-146 (purification discharge to RWT 11). The purification system supply valve from cooler 11, SFP-127, is opened, and SFP-128 is shut. Flow indicator FIS-1999 (purification flow) should be monitored at 120 gpm or less.

4.6.11 Demineralizer Operations

OI-24 provides instructions for discharging the contents of the SFP demineralizer. The process is described here for the purpose of illustration, and the reader is referred to the OI for a more specific description of the discharge procedure. To discharge resin from the SFP demineralizer, the demineralizer must first be isolated. To isolate the demineralizer, the purification flow is diverted around the demineralizer by opening demineralizer bypass valve SFP-139, and shutting the demineralizer inlet and outlet isolation valves. Isolation valve 0-SWP-130 on the steam generator blowdown recovery ion exchanger spent resin transfer header is shut. The primary ion exchanger spent resin transfer header isolation valve, 0-SWP-129, is opened. The demineralizer's vent, resin fill valve, and resin discharge valves are checked shut before demineralized water is admitted to the demineralizer. Nitrogen is admitted to the demineralizer shell via the nitrogen to ion exchanger header (85 psig). The demineralizer spent resin outlet stop valve (SFP-208) and the spent resin metering tank inlet valve are opened to discharge resin to the spent resin metering tank. Flow is verified by visual inspection of the local sightglass indication. When the sightglass indication turns clear, the resin transfer process is stopped by returning the valve lineup to its normal alignment, as described in the OI. Upon completion of the resin transfer, the transfer piping must be flushed for 10 minutes to remove retained resin from the piping's internal surfaces.

To fill the demineralizer with resin, a batch of resin is mixed in accordance with Rad-Chem instructions in the resin addition tank with demineralized water to form a resin "slurry." This slurry is transferred by gravity from the resin addition tank on the 45-foot level to the demineralizer shell on the 27-foot level. During this process the demineralizer is isolated and the discharge valve from the resin addition tank to the demineralizer is open. Upon completion of the resin fill procedure, the resin addition tank is flushed and the resin is "fluffed" with nitrogen to preclude its agglomeration and stratification.

4.7 Changes to the SFP/SFPCPS

Changes made to the SFP and the SFPCPS are listed in Table 6-2 under the applicable Facility Change Request (FCR/ESP) number. The main modification was the installation of the high density spent fuel racks to increase the storage capacity of the pool.

5.0 System Design Characteristics

This section presents, in tabular format, the pertinent technical data associated with the Spent Fuel Pool and the Spent Fuel Pool Cooling and Purification Systems.

TABLE 5-1
SFP COOLING AND PURIFICATION SYSTEM ALARMS ON PANEL 1C13

Initiating Device	Setpoint	Alarm Window Legend
0-FIS-1999	Low = 105 gpm	SFP DEM FLOW LO DIFF PRESS HI
0-LS-2001 0-LS-2002	High = 471.5" Low = 462.0"	SFP LEVEL TEMP HI
0-PDIS-1999	High = 35 psid	SFP FILTER DIFF PRESS HI
0-PDIS-2000	High = 15 psid	SFP DEM FLOW LO DIFF PRESS HI
0-PS-1994 0-PS-1995	Low = 70 psig	SFP COOLING PPS DISCH PRESS LO
0-TS-1997 0-TS-1998	High = 110°F	SFP COOLER DISCH TEMP HI
0-TS-2001 0-TS-2002	High = 120°F	SFP LEVEL TEMP HI

TABLE 5-2
TECHNICAL DATA FOR
SFP COOLING AND PURIFICATION SYSTEM PUMPS
AND HEAT EXCHANGERS

Pumps

Type	Horizontal, centrifugal, with mechanical seal
Number	2
Capacity (each)	1390 gpm
Total discharge head	200 feet
Design pressure	175 psi
Material	Stainless steel
Motor	100 HP, 460 V, 60 Hz, three-phase, 3,550 rpm
Manufacturer	Ingersoll-Rand

Heat Exchangers

Type	Horizontal, counter flow, straight tubes, rolled into tubesheets
Number	two in parallel
Design heat transfer (each)	10.1×10^6 Btu/hr.
Heat transfer area (each)	1920 sq. ft.
Service water temperature in/out	95°F/106.2°F
Spent fuel coolant temperature in/out	127°F/111°F
Shell material	C.S. SA-285-C
Tube material	S.S. - 304 SA-213
Tubesheet material	S.S. - 304 SA-240

TABLE 5-3
TECHNICAL DATA FOR SFP COOLING AND PURIFICATION SYSTEM FILTER, DEMINERALIZER, AND PIPING

Fuel Pool Filter

Type	Cartridge
Number	1
Flow, design/operation	128/120 gpm
Design pressure	175 psig
Design temperature	250°F
Filter rating	0.45 micron
Material	Stainless steel

Fuel Pool Demineralizer

Type	Mixed bed, non-regenerable
Number	1
Flow, design/operating	128/120 gpm
Design pressure	200 psig
Design temperature	250°F
Resin type	Mixed (Anion, Cation)
Materials	Stainless steel

Piping, Fittings, Valves

Material	S.S. -304
Design pressure	160 psig
Design temperature	150°F
Joints 2 1/2" and larger	Butt-welded except at flanged equipment
Valves 2 1/2" and larger	S.S., Butt-welded ends 150 psi
Butterfly 6" and larger,	
all sizes	Rubber lined carbon steel lug type, 150 psi

TABLE 5-4
SFP COOLING AND PURIFICATION SYSTEM INSTRUMENT LOCATIONS

Instrument Number	Description	Location
0-FG-2000	SFP demineralizer vent flow glass	Northeast corner of Cooler Room
0-FG-2001	SFP demineralizer transfer line flow glass	Northwest corner of Cooler Room
0-FG-2003	Demineralized water for SFP demineralizer flow glass	Northwest corner of Cooler Room
0-FI-1999	SFP purification system flow	West wall of Cooler Room
0-FIS-1999	SFP purification system flow	Hallway wall east of Boric Acid Batching Tank 21
0-PDI-2001	SFP demineralizer outlet wye strainer differential pressure	Hallway wall east of Boric Acid Batching Tank 11
0-PDIS-1999	SFP filter differential pressure	East wall outside Filter Room
0-PDIS-2000	SFP demineralizer differential pressure	East wall outside Filter Room
0-PI-1994	SFP pump 11 discharge pressure	West wall of Cooler Room
0-PI-1995	SFP pump 12 discharge pressure	West wall of Cooler Room
0-TI-2003	SFP cooler 11 inlet temperature	South end of SFP Cooler 11
0-TI-2004	SFP cooler 11 outlet temperature	North end of SFP Cooler 11
0-TI-2005	SFP cooler 12 inlet temperature	South end of SFP Cooler 12
0-TI-2006	SFP cooler 12 outlet temperature	North end of SFP Cooler 12

TABLE 5-5
SFP COOLING AND PURIFICATION
PREVENTIVE MAINTENANCE REQUIREMENTS

Number	Description
1-67-E-2YR-1	Perform breaker inspection on the SFP pumps.
1-67-E-2R-1	Perform insulation test and DC resistance test on SFP pump motors.
1-67-I-RQ5-100	Calibrate/calibrate check the temperature instruments 0-TS-1997, 0-TS-1998, 0-TS-2001 and 0-TS-2002.
1-67-I-R-101	Prior to a refueling cycle, calibrate/calibrate check the following instruments: 0-PS-1994, 0-PS-1995, 0-FIS-1999, 0-PDIS-1999 and 0-PDIS-2000.
1-67-M-A-2	Lubricate the motor bearings, couplings, and pump bearings on the SFP pump motors.
67-1-O-M	Rotate the SFP pumps electrically or by hand once per month.
67-2-O-M	Determine SFP leakage in accordance with Section XXVII of OI-24.

TABLE 5-6
SPENT FUEL POOL LIMITING CONDITIONS
FOR OPERATION (LCO) AND TECHNICAL REQUIREMENTS (TNC)

LCO/TNC	Description	Implemented By
3.7.13	Requires minimum water levels of 21.5 feet over the top of irradiated fuel assemblies seated in the storage racks and 19.8 feet over the top of fuel assemblies seated on rack spaces in the storage racks for reconstitution activities during movement of irradiated fuel assemblies in the SFP.	STP-O-087-1(2)
3.7.16	Requires minimum SFP Boron concentration of 2000 ppm.	
3.7.17	Unit 2 SFP Only: Establishes enrichment and burnup criteria for irradiated and unirradiated fuel assemblies stored in the U-2 SFP.	
15.9.4	Forbids loads larger than 1600 pounds to travel over fuel assemblies in the SFP unless being handled by a single failure proof crane.	

6.0 References, Drawings and Sources of Additional Information

This section lists, in tabular format, references that are useful in analyzing system design, operation, and repair. Tables 6-1 and 6-2 are applicable to the Spent Fuel Pool and the SFP Cooling and Purification System.

TABLE 6-1
SPENT FUEL POOL AND
SPENT FUEL POOL COOLING AND PURIFICATION
SYSTEM REFERENCES

Document	Applicable Sections	
FSAR	Sections 9.4 and 9.7	
TECHNICAL SPECIFICATIONS	Sections 3.7.13. 3.7.16, 3.7.17	
TECHNICAL REQUIREMENTS	Sections 15.9.4	
SURVEILLANCE TEST PROCEDURES	0-87-1(2)	
NORMAL OPERATING INSTRUCTIONS	OI-24A - H	
TECHNICAL MANUALS	12077-008	Spent Fuel Pool Cooling Pumps
	12079-002	Spent Fuel Pool Coolers (Heat Exchangers)

Technical Drawings

Civil	BG&E No.	Bechtel No.	Foreign Print No.
Auxiliary Building Unit-1 Floor Plan at El. 27'-0", Sh.1	61-675-E	C-175, Rev. 24, 25	-
Auxiliary Building, Spent Fuel Liner, Plan and Sections, Sh.1	61-706-E	C-206, Rev. 15	-
Equipment Locations			
Auxiliary Building, Plan at 27'-0"	60-203-E	M-3, Rev. 11	-
Containment & Auxiliary Building,			
Unit-1, Section A-4	60-215-E	M-23, Rev. 2	-
Auxiliary Building, Section G-G	60-218-E	M-29, Rev. 1	-
Piping Drawings			
Spent Fuel Pool Cooling and Purification System O&M Drawing	60-716-E	OM-58, Rev. 4	-
M Drawing (with no DCNs)		M-58	
Other Drawings			
Logic Diagram, SFP Cooling Pumps	60-631-B	1-LD-95, Sht. 1, Rev. 2	-
Schematic Diagram, SFP Cooling Pumps	61-095-B	1E95, Sht. 1, Rev. 6	-

TABLE 6-2
FACILITY CHANGE REQUESTS (FCRs/ESPs)

FCR Number	Description
74-0122	Replace valve handwheels on SFP-132, -133 with smaller ones.
75-0216	Install manual drain valve in door blank flanges associated with SFP cooling spool pieces.
75-1080	Revise P&ID M-58 to reflect as-built.
75-1138	Revise P&IDs M-58 and M-77, Sheet 2, to reflect as-built.
75-1155	Revise P&ID M-58 to reflect as-built
76-0006	Add 0-FI-1999 inside Spent Fuel Cooling Room.
76-0142	Install unions above pump casing on discharge.
76-1037	Remove existing spent fuel racks and install high capacity racks.
77-0071	Revise drawings to show as-built change on spent fuel pool cooling pipe.
77-0179	Delete SFP siphon breaker gooseneck valve.
77-1022	Modify Unit-1 SFP by the addition of high capacity storage racks.
78-0026	Install sleeving platform and jib crane at SFP (Unit 2).
78-1018	Fabricate and install temporary platform over SFP for sleeving fuel assembly guide tubes (modifications to platform and allow use on Unit-1 also).
79-0053	Insert sleeve into damaged bearing housing; repair and machine inner shoulder and housing to original dimensions on spent fuel pool cooling pump.
79-0077	Add chain operators to valve handwheels on refueling pool skimmer valves SFP-176 (-284).
80-0099	Modify SFP cooling pump suction strainer from welded to woven construction.
80-1000	Replace spent fuel racks in south half of pool with poison racks.
81-0034	Change SFP demineralizer wye strainer cover studs to hex head bolts.
81-0050	Modify SFP cooling suction strainer element to improve structural integrity and fit.
81-0138	Replace Ashcroft model 1125 with Barton 228 on 0-PDI-2001 and 0-PDIS-1999, -2000; as-built FCR.
82-0065	Change valve on spent fuel pool heat exchanger 11 drain line to 1" 600# Mark 130M globe valve.
82-0090	Install support assembly for 3/4" vent on SFP pump 12 discharge.
82-0092	Add chain operators to refueling pool cavity drain valves: SFP-135, -172, -173, and -174, -181, -182, and -183.
82-0184	Purchase and install underwater periscope for spent fuel inspection.
87-3004	Fuel enrichment and fuel rack modification.

APPENDIX A

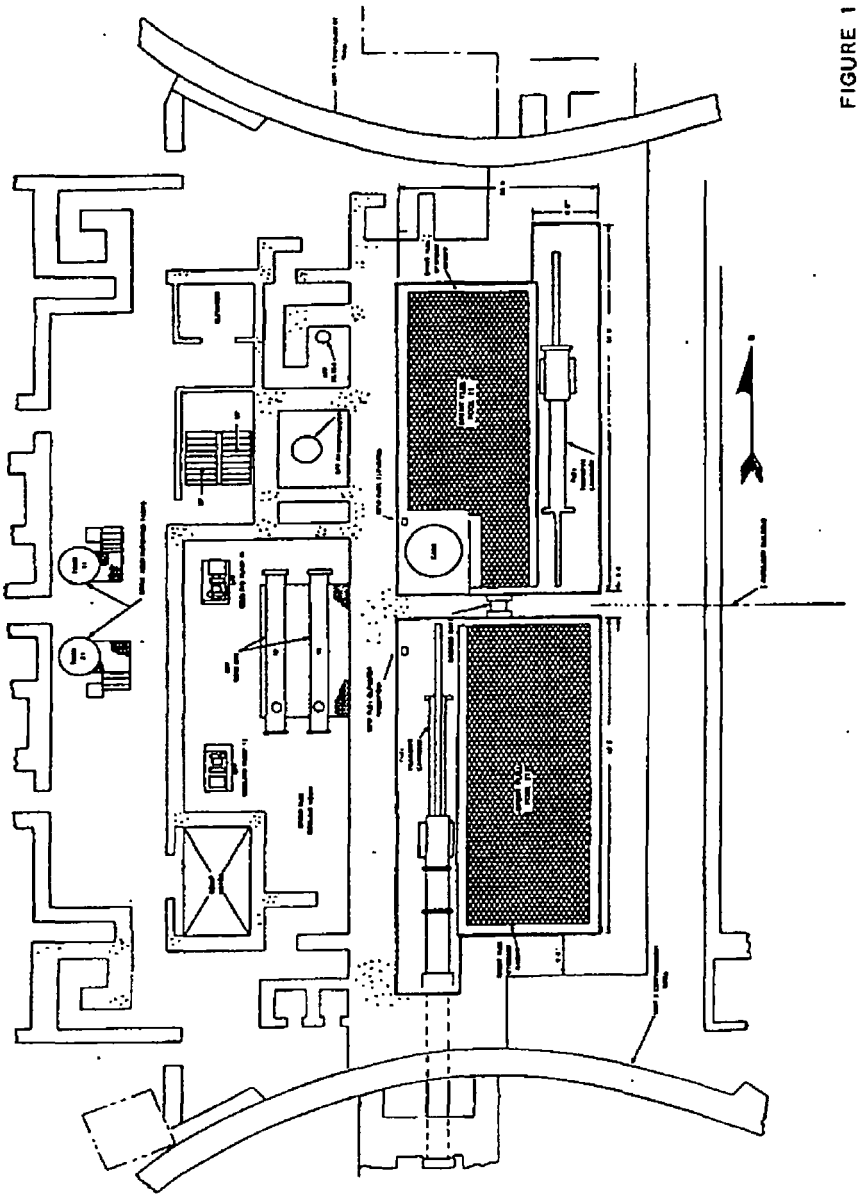

Figure 1

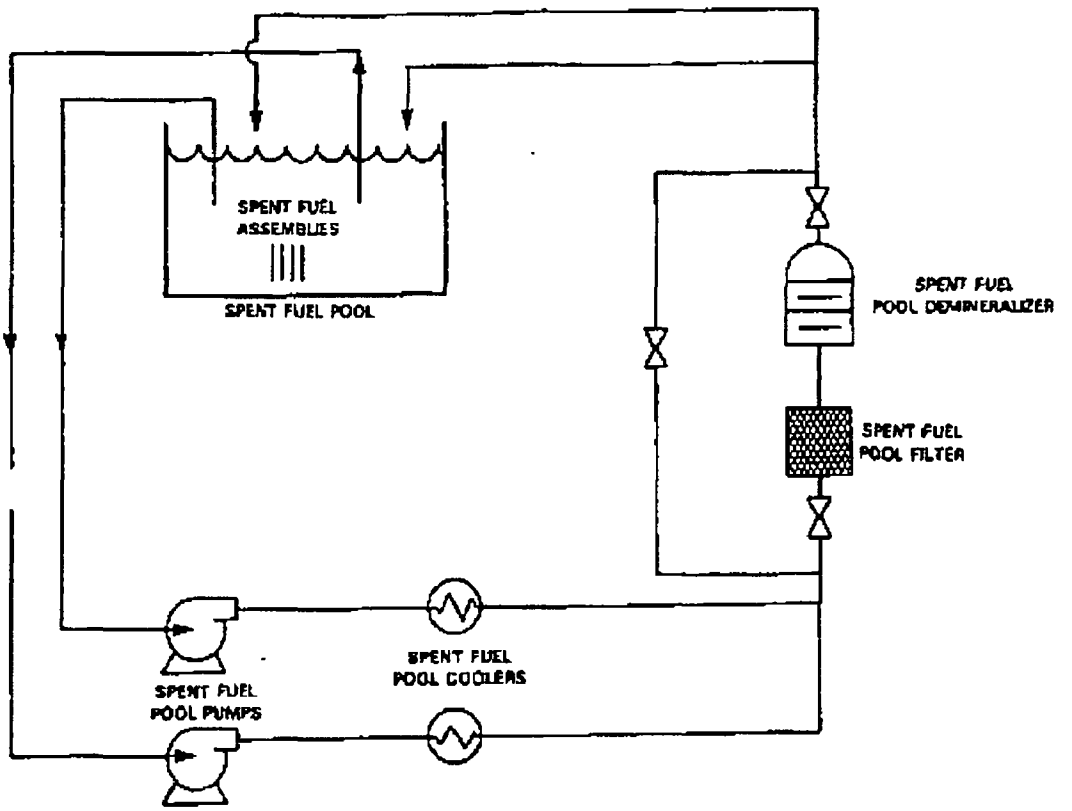

FIGURE 10-1

SPENT FUEL POOL COOLING AND
PURIFICATION SYSTEM
SIMPLIFIED DIAGRAM

Figure 2

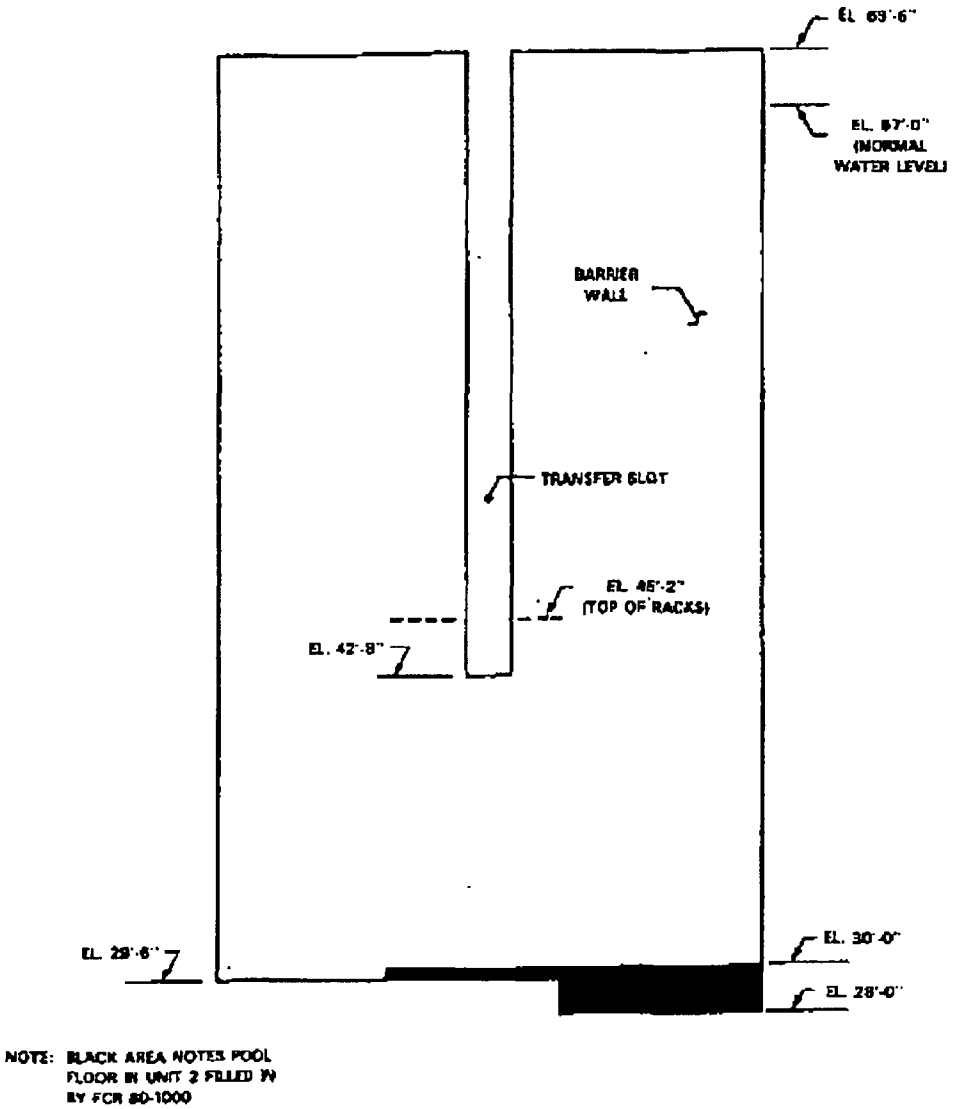

FIGURE 10-3

SFP BARRIER WALL LOOKING NORTH
FROM POOL 21

Figure 3

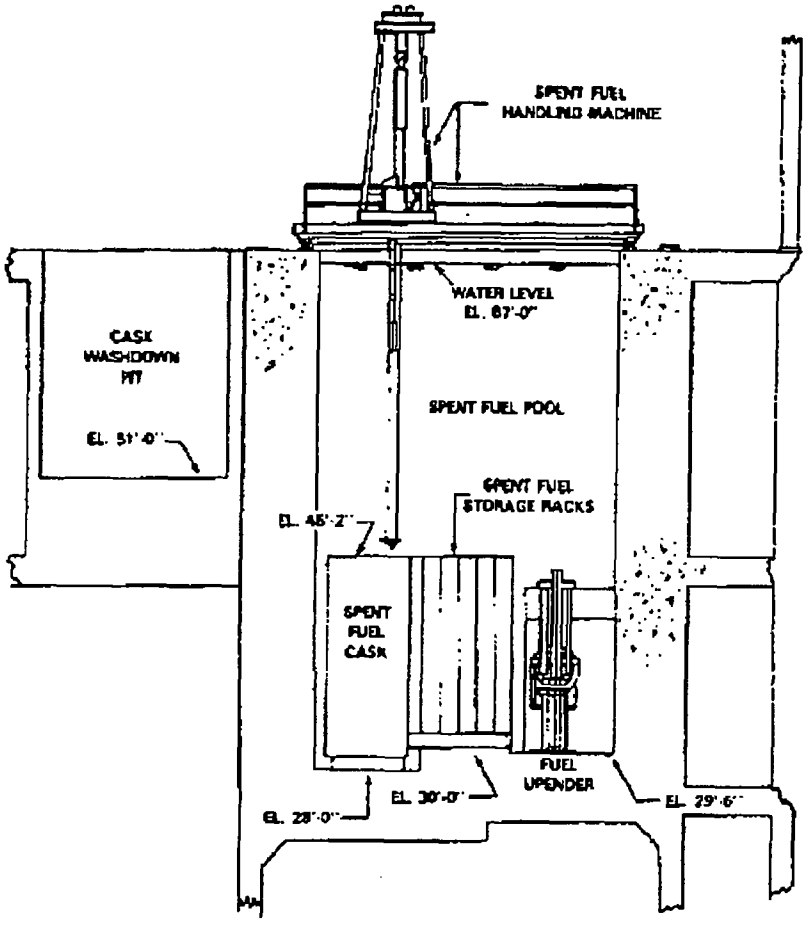

FIGURE 10-4

ELEVATION THROUGH UNIT-1
LOOKING NORTH

Figure 4

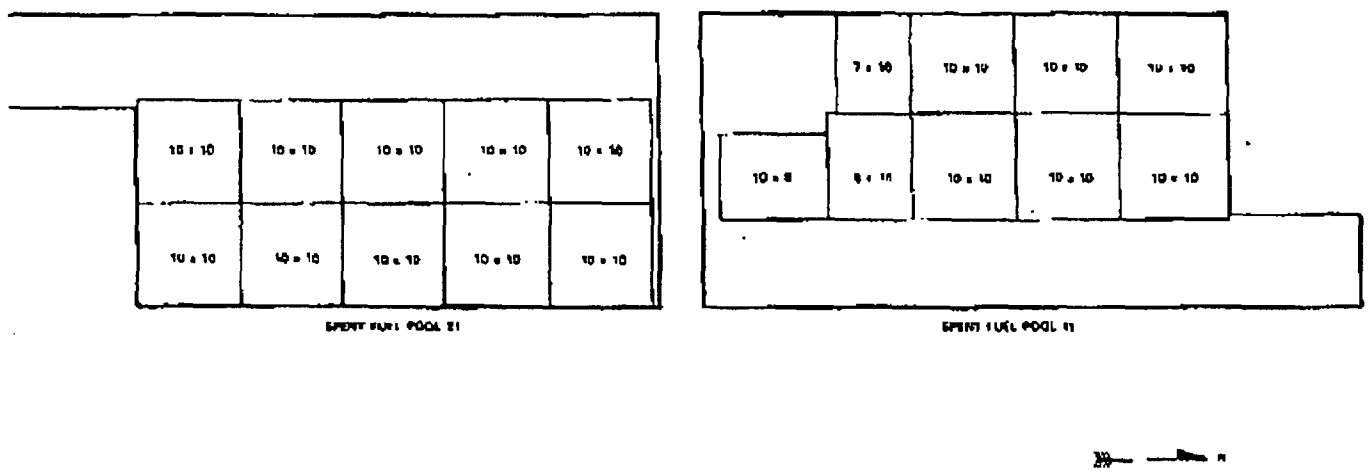

FIGURE 10.6
SPENT FUEL RACK CONFIGURATION

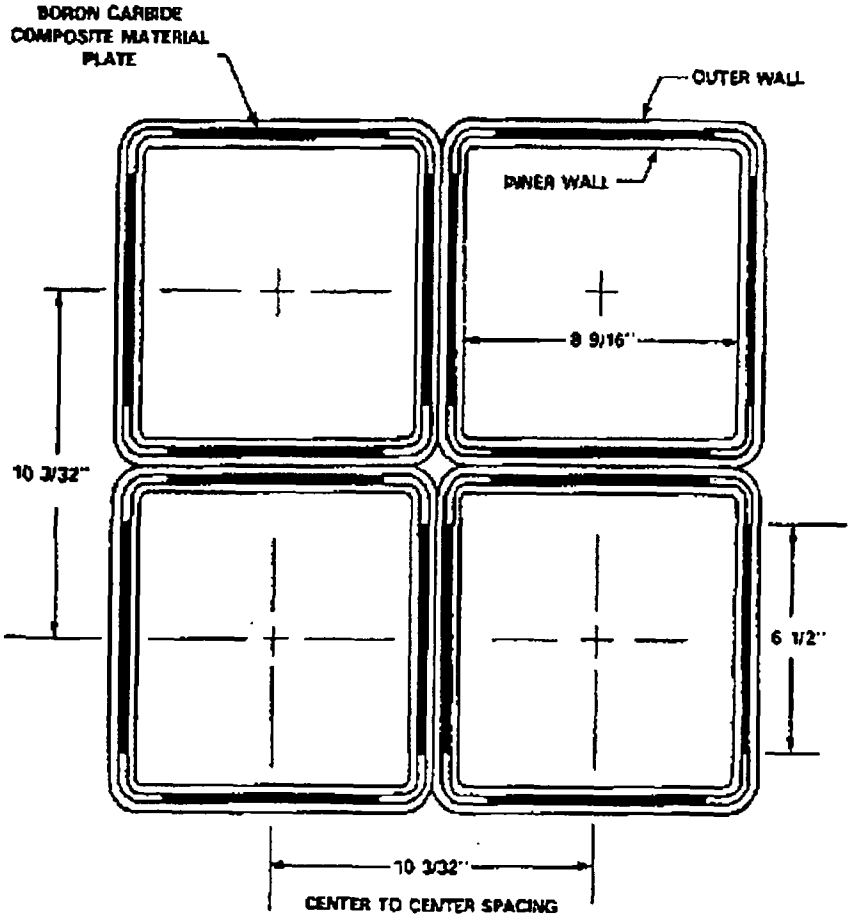

FIGURE 10 7

CONCEPTUAL DRAWING OF CROSS-SECTION
OF SPENT FUEL RACK

Figure 6

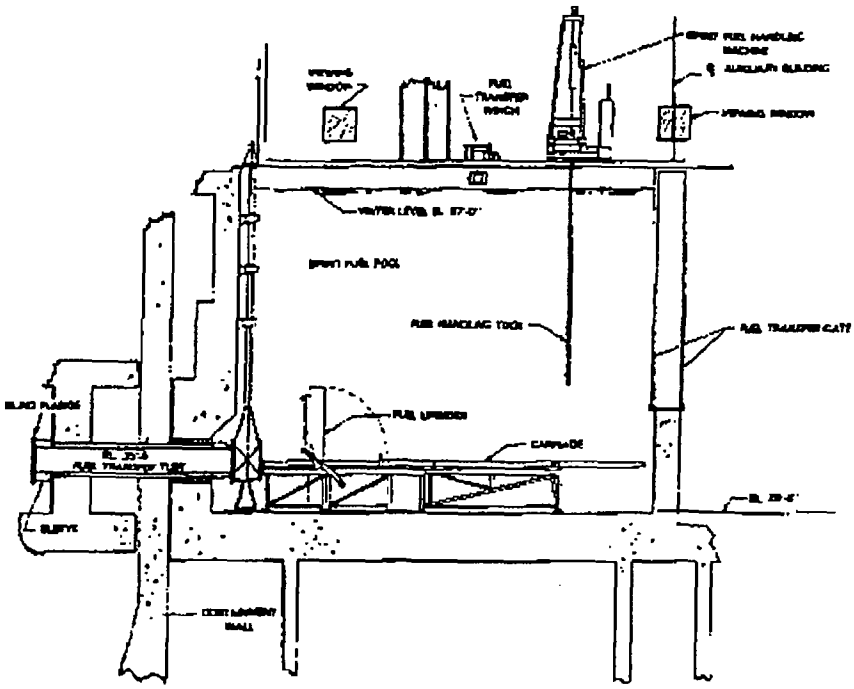

FIGURE 10-8

ELEVATION THROUGH UNIT-1
LOOKING EAST - UPENDER AREA

Figure 7

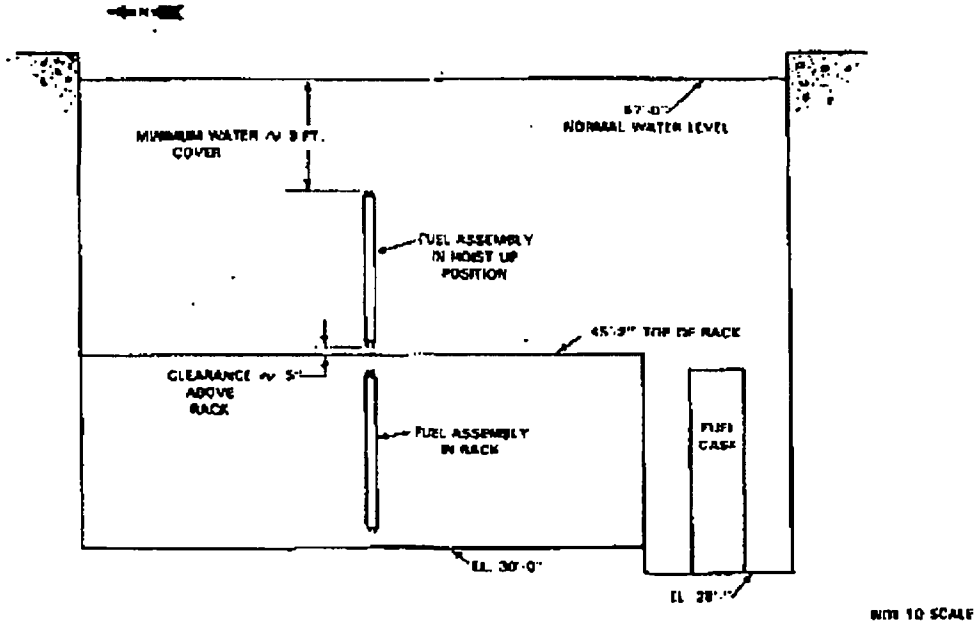

FIGURE 10-3

ELEVATION THROUGH UNIT-1
LOOKING EAST - RACK AREA

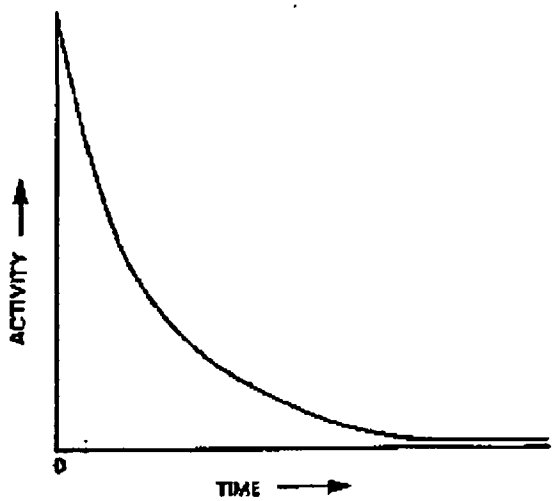

FIGURE 10-16

EXPONENTIAL DECAY OF AN ISOTOPE

Figure 9

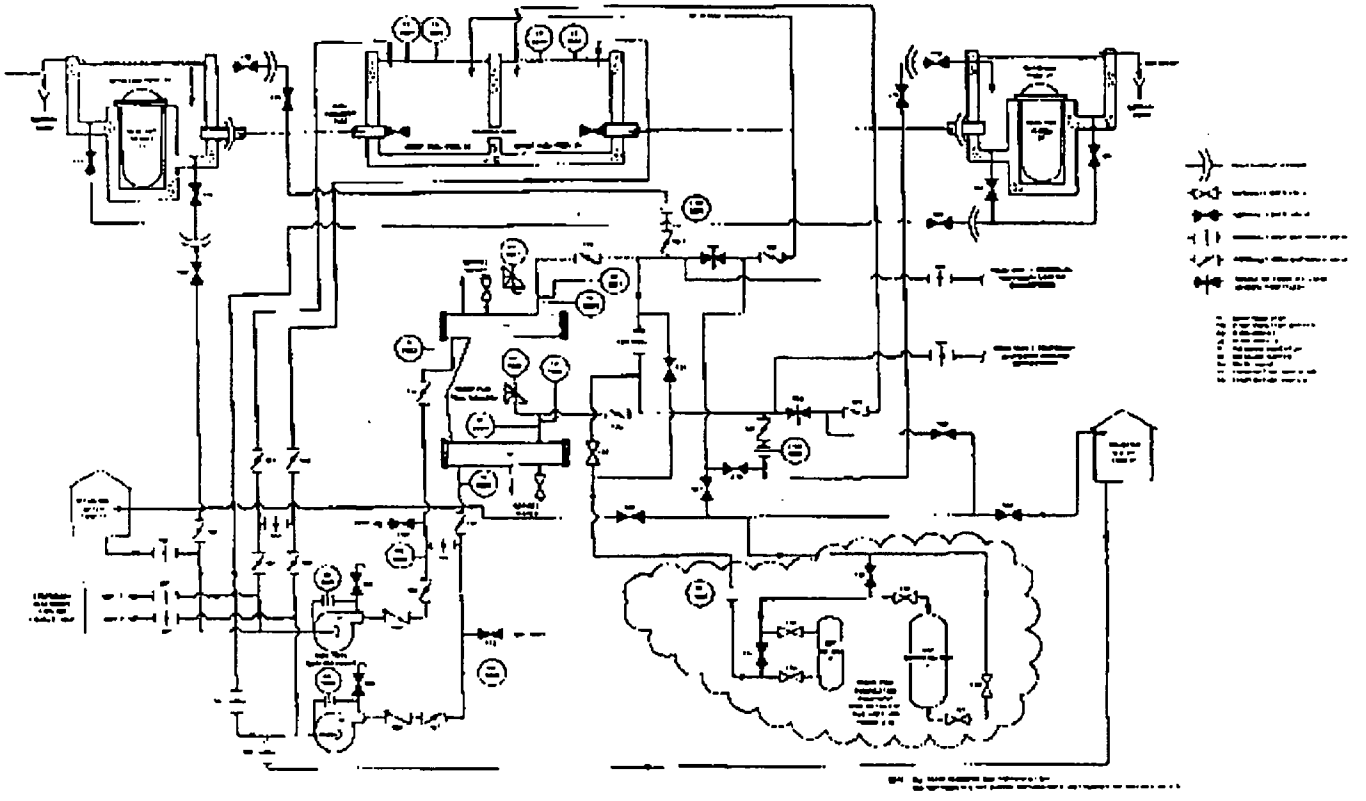

FIGURE 10-11

SPENT FUEL POOL COOLING AND PURIFICATION PIPING DIAGRAM

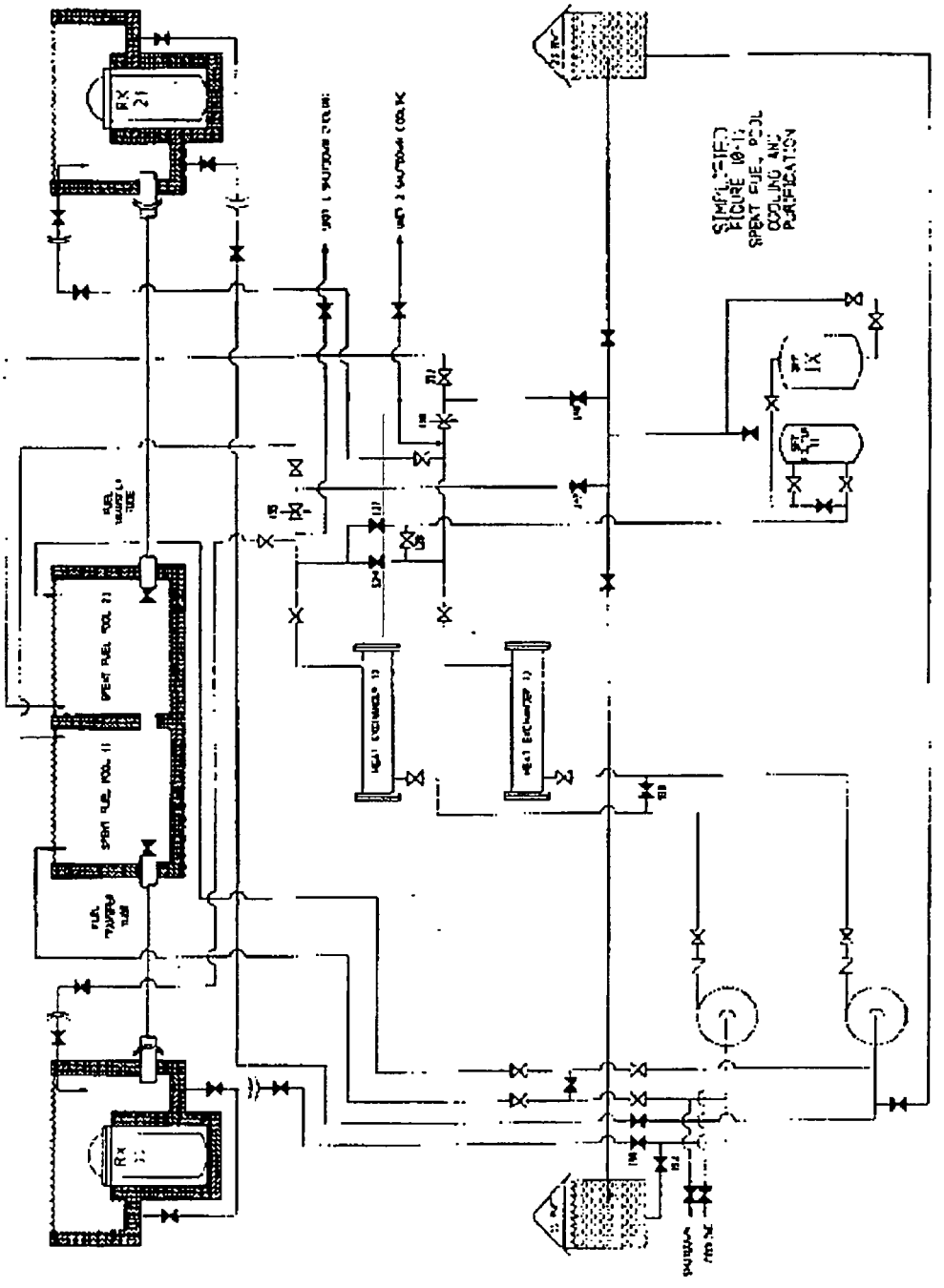

Figure 11

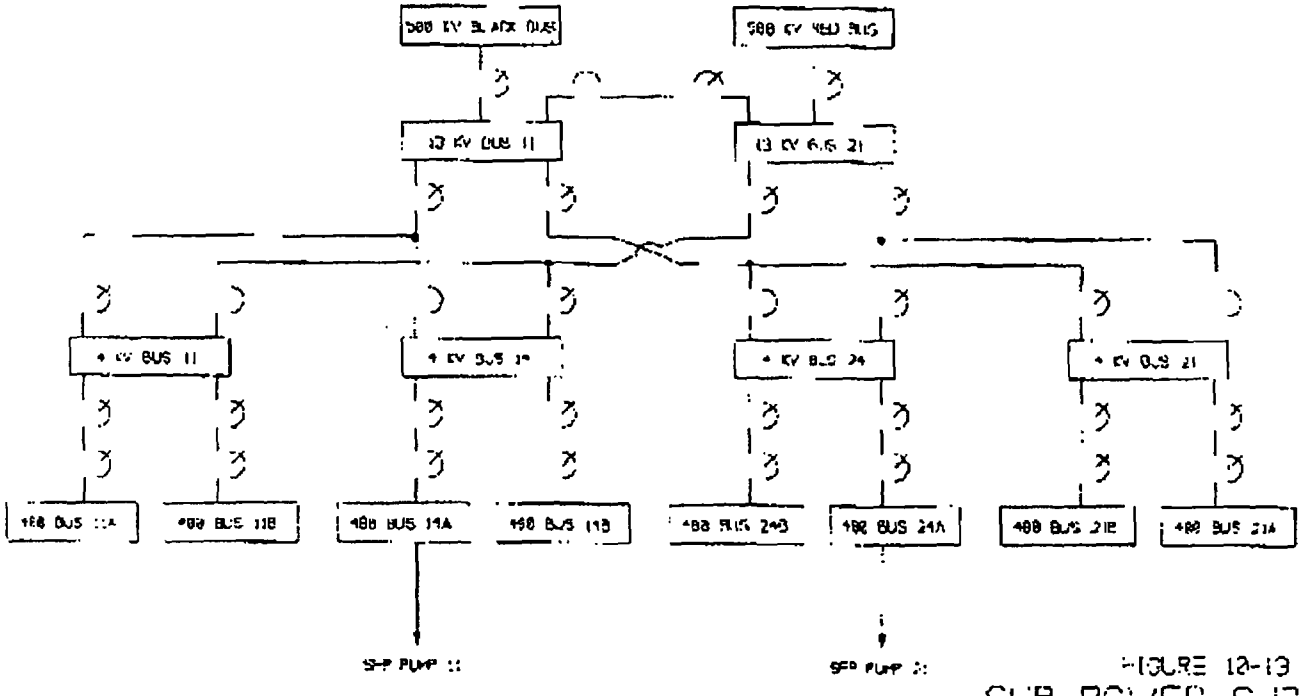

FIGURE 12-13
SFP POWER SUPPLIES

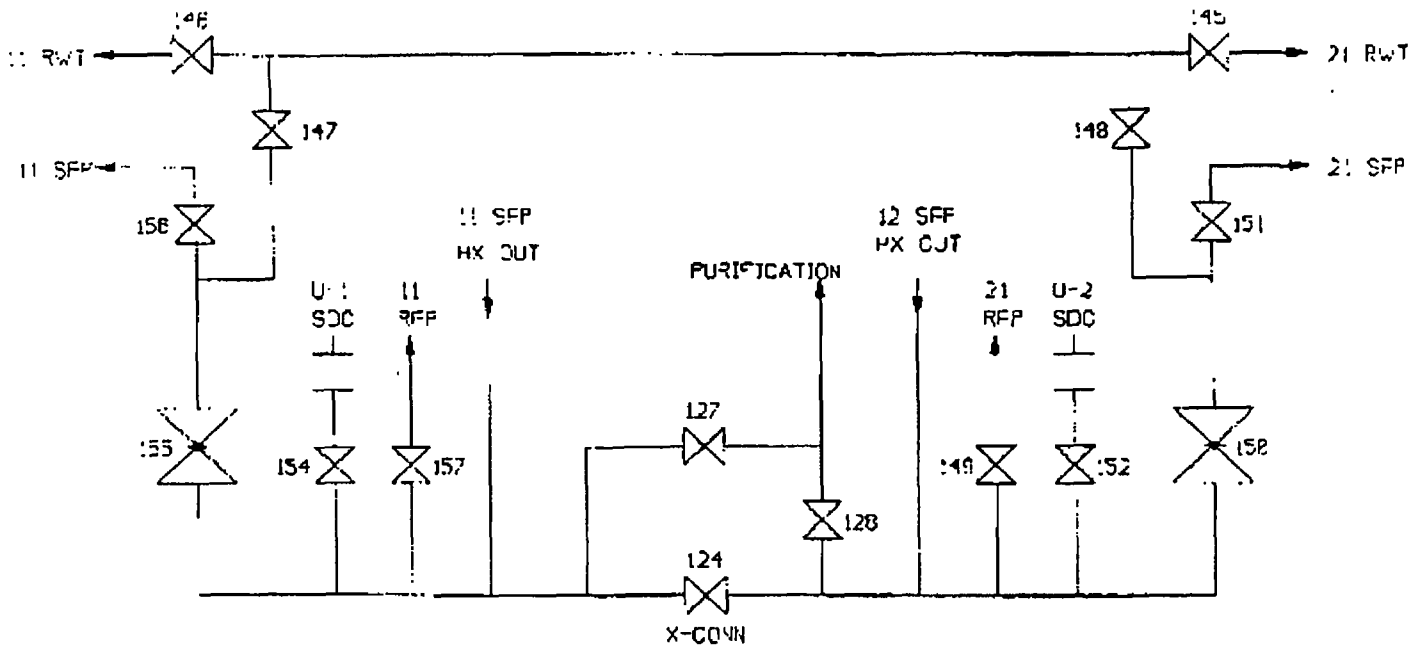

SFP ROOM WEST SIDE 12 HX

FIGURE 10-15

Figure 13

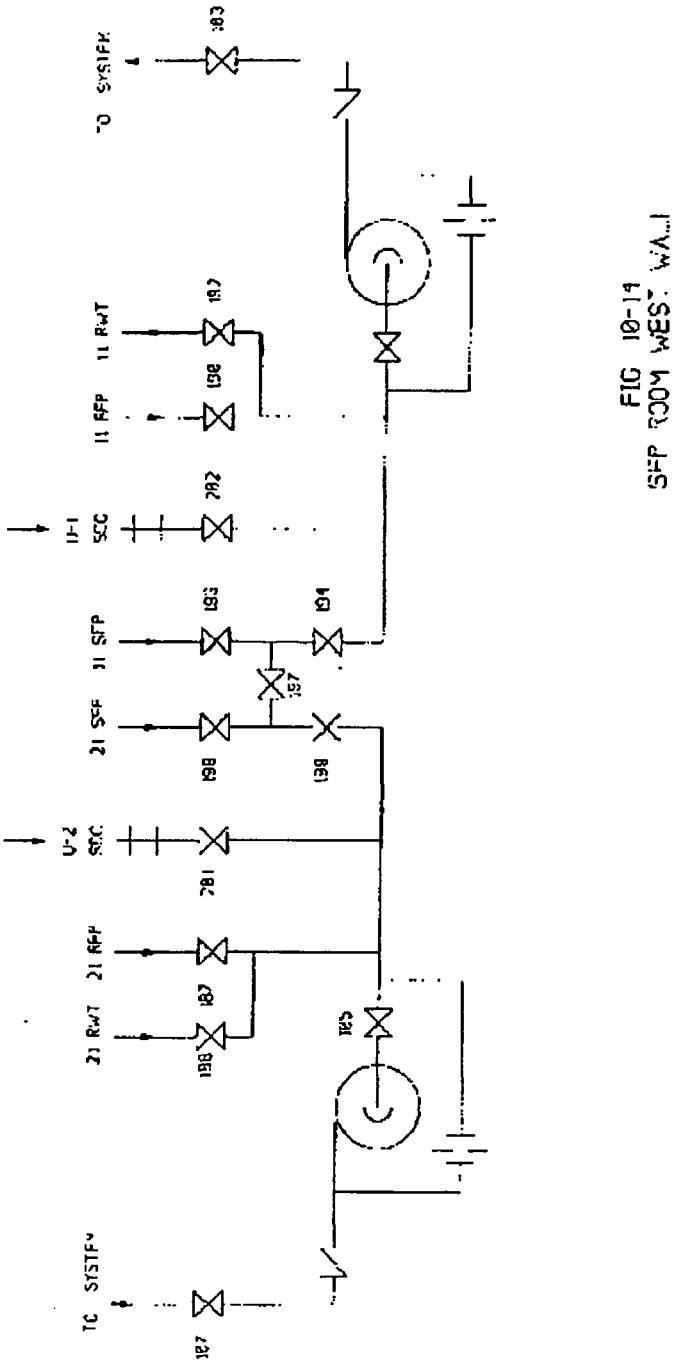

FIG 10-14
SFP ROOM WEST WALL

Figure 14

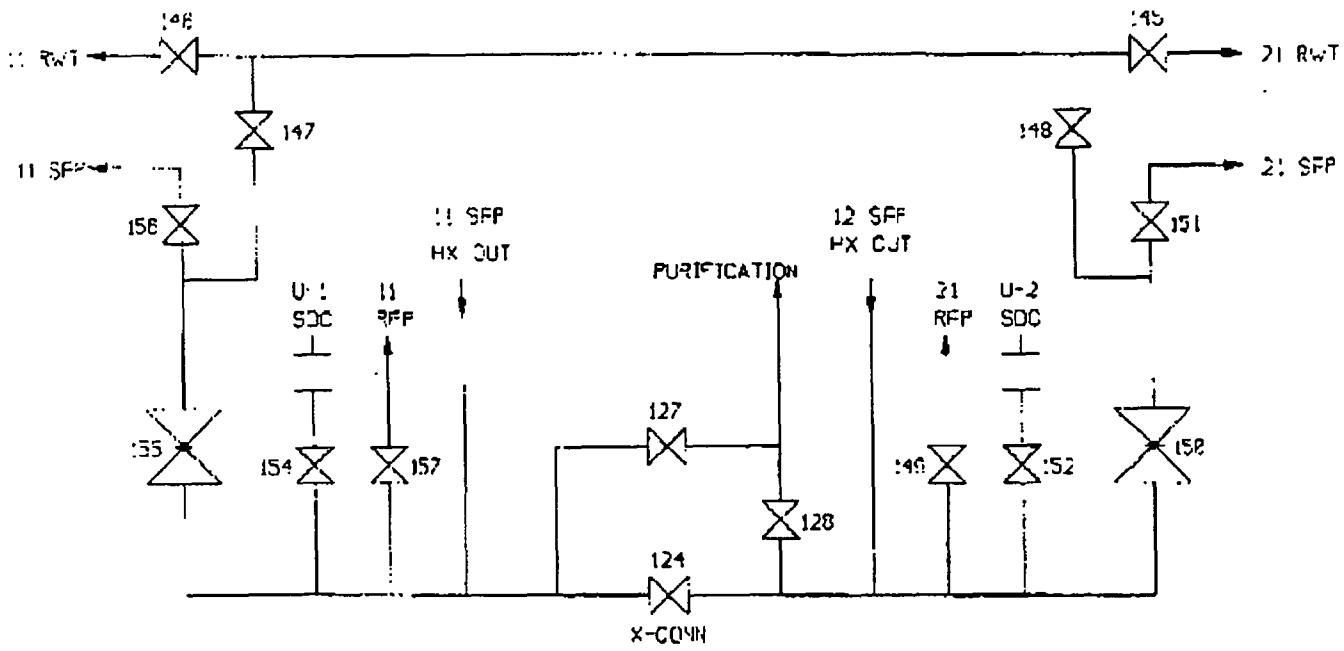

SFP ROOM WEST SIDE 12 HX

FIGURE 10-15

Figure 15

CALVERT CLIFFS NUCLEAR POWER PLANT

UNIT ONE

1C02-ALM

TURBINE CONTROL & GEN AUX ALARM MANUAL

REVISION 41

Safety Related

REFERENCE USE

Approval Authority: Chris Jones 5/22/2008
signature/date

Effective Date: 6/2/2008

LIST OF EFFECTIVE PAGES

PAGE NUMBER	REVISION
1-92	41

PROCEDURE ALTERATIONS

PAGE NUMBER	REVISION
56,69,70	04106

1.0 PURPOSE

A. This Alarm Manual provides information to the Operator for diagnosis of alarm conditions and recommended actions to mitigate the consequences of the alarm condition.

B. This Alarm Manual provides pre-planned compensatory actions that should be considered for implementation when an alarm is not available.

2.0 APPLICABILITY/SCOPE

This Alarm Manual addresses Control Room annunciator panel 1C02.

3.0 REFERENCES AND DEFINITIONS

3.1 DEVELOPMENTAL REFERENCES

A. NO-1-201, Calvert Cliffs Alarm Manual.

B. NO-1-206, Alarm Annunciator Control.

C. Additional references are listed in the response for each alarm window.

3.2 PERFORMANCE REFERENCES

A. OI-9A, Main Turbine Lube Oil System And Main Turbine /SGFP Lube Oil Transfer System

B. OI-9B, Turbine Steam Seal

C. OI-9C, Main Turbine EHC System

D. OI-10A, Seal Oil System

E. OI-10B, Generator Gas System

F. OI-10C, Stator Water Cooling Water System

G. OI-11A, Condensate System

H. OI-43A, Main Turbine And Generator/Exciter Operation

I. AOP-7E, Main Turbine Malfunction

J. AOP-7F, Loss Of Load

K. AOP-7G, Partial Loss of Condenser Vacuum

L. EOP-0, Post Trip Immediate Actions

M. Alarm Manual Response

- 1C41
- 1C42
- 1C77

3.3 DEFINITIONS

A. FA - Fast Acting

B. LVDT - Linear Variable Differential Transmitter

C. SUICIDED - Disabled and put into a safe state

D. UCVF - Controller Version F

E. VAIC - Analog Input/Output

F. VCMI - Bus Master Controller

G. VCRC - Discrete Contact Input / Relay Output

H. VGEN - Generator Monitor and Trip

I. VPRO - Turbine Protection Board

J. VSVO - Servo Control

K. VTCC - Thermocouple Input

L. VTUR - Turbine Specific Primary Trip

M. VVIB - Vibration Monitor Board

4.0 PREREQUISITES

Specific alarm received or not available.

5.0 PRECAUTIONS

A. Inappropriate actions may result if operational decisions are based solely on single alarms without consideration of associated alarms and instrumentation.

B. In no case does the information contained here in supersede an OP, OI, AOP or EOP.

6.0 PERFORMANCE

A. Upon receipt of an alarm, **DETERMINE** its validity by comparing appropriate indications to the setpoint, if there is one:

B. **IF** multiple alarms are received,
THEN EVALUATE alarms from highest to lowest priority.

NOTE
The CONDITIONS - RESPONSES are listed in hierarchical order **NOT** as step by step instructions. Perform the response that applies to the existing condition.

C. **UTILIZING** the information for each alarm:

1. **DIAGNOSE** the condition.

2. **IMPLEMENT** the appropriate EOP or AOP or **INITIATE** appropriate responses.

7.0 POST PERFORMANCE ACTIVITIES

None

8.0 BASES

None

9.0 RECORDS

None

DEVICE	SETPOINT	WINDOW	B-01
TD-3X AR-6	165° F for 30 minutes 175° F	ISOPHASE BUS TEMP HI	

POSSIBLE CAUSES

- First stage temperature greater than 165° F for 30 minutes
- Second stage temperature at 175° F
- Loss of air flow for 30 minutes
- Loss of cooling water flow for 30 minutes

AUTOMATIC ACTIONS

None

CAUTION
Reduction of load is necessary to prevent damage to the Isophase Bus due to overheating.

CONDITION	RESPONSE
1. First stage temperature greater 165° F for 30 minutes.	1. Perform the following: a. With SM or CRS permission, **REDUCE** Generator output to 16,000 amps. b. **ENSURE** the applicable response(s) for the dropped flags at Panel 1C77 are being performed.
2. Second stage temperature greater than or equal to 175° F.	2. Perform the following: a. With SM or CRS permission, **REDUCE** Generator output to 16,000 amps. b. **ENSURE** the applicable response(s) for the dropped flags at Panel 1C77 are being performed.

(continued)

(continued) **WINDOW** **B-01**

ANNUNCIATOR COMPENSATORY ACTIONS

IF Window B-02 is operable,
THEN NO compensatory actions are required.

IF Window B-02 is inoperable,
THEN MONITOR Alarm Panel 1C77 every two hours .

REFERENCES

61-073, Sheets 11B, 11C; 61-087, Sheet 2

DEVICE	SETPOINT	WINDOW	B-02
KX	N/A	ISOPHASE BUS	

POSSIBLE CAUSES

- Alarm on 1C77, Isophase Bus Duct Cooling Alarm Panel

AUTOMATIC ACTIONS

None

NOTE
Alarm must be reset at 1C77.

CONDITION	RESPONSE
1. Alarm on 1C77.	1. **REFER** TO the appropriate response in 1C77-ALM, Isophase Bus Duct Cooling Alarm Manual.

ANNUNCIATOR COMPENSATORY ACTIONS

IF less than 16,000 amps,
THEN MONITOR Alarm Panel 1C77 every four hours.

IF greater than 16,000 amps,
THEN MONITOR Alarm Panel 1C77 every two hours.

REFERENCES

61-073, Sheets 11B, 11C; 61-087, Sheet 2

DEVICE	SETPOINT	WINDOW	B-03
1MODU1T30R1/RLY1 CH-1	HI 7 mils (6.5 to 7.5)	TURB VIBRATION	
1MODU1T30R2/RLY1 CH-1	HI-HI 12 mils (11.5 to 12.5)		

POSSIBLE CAUSES

- Excessive moisture carryover
- Turbine rotor out of balance
- Excessive journal bearing wear
- Critical speed during startup

AUTOMATIC ACTIONS

None

(continued)

(continued) **WINDOW** **B-03**

CONDITION	RESPONSE
1. Vibration alarm setpoint exceeded during steady state operation.	1. **IF** <Monitor><vibration> Proximeter Vibration exceeds 8 mils, **THEN PERFORM** the following: • **IMPLEMENT** AOP-7E, Main Turbine Malfunction. • **CLOSE** breaker 52-11618, CONDENSER VACUUM BKR 1-MOV-6717 as follows: a. **HOLD** 1-HS-6717 in the CLOSE position **AND CLOSE** breaker 52-11618, CONDENSER VACUUM BKR 1-MOV-6717. (located near the east end of MCC 116).
2. Vibration alarm setpoint exceeded during a startup.	2. **IF** <Monitor><vibration> Proximeter Vibration exceeds 10 mils, **THEN PERFORM** the following: • **IMPLEMENT** AOP-7E, Main Turbine Malfunction. • **CLOSE** breaker 52-11618, CONDENSER VACUUM BKR 1-MOV-6717 as follows: a. **HOLD** 1-HS-6717 in the CLOSE position **AND CLOSE** breaker 52-11618, CONDENSER VACUUM BKR 1-MOV-6717. (located near the east end of MCC 116).

ANNUNCIATOR COMPENSATORY ACTIONS

Continuously **MONITOR** <Monitor><vibration> Proximeter Vibration during startup.

MONITOR <Monitor><vibration> Proximeter Vibration every two hours during steady state operation.

REFERENCES

61087SH0002

DEVICE	SETPOINT	WINDOW	B-04
None	None	SPARE	

POSSIBLE CAUSES

None

AUTOMATIC ACTIONS

None

CONDITION	RESPONSE
1. None	1. None

ANNUNCIATOR COMPENSATORY ACTIONS

None

REFERENCES

None

DEVICE	SETPOINT	WINDOW	B-05
None	None	SPARE	

POSSIBLE CAUSES

None

AUTOMATIC ACTIONS

None

CONDITION	RESPONSE
1. None	1. None

ANNUNCIATOR COMPENSATORY ACTIONS

None

REFERENCES

None

DEVICE	SETPOINT	WINDOW	B-06
1-LS-2327	High: 4 inches Above Center Line Of Tank (3 to 5 Inches Above Center Line Of Tank Low: 4 inches below Center Line Of Tank (3 to 5 Inches Below Center Line Of Tank)	**STATOR COOLANT WTR TK LVL**	

POSSIBLE CAUSES

- Valve packing leak
- Pump packing leak
- System leakage
- Overfill by the Operator

AUTOMATIC ACTIONS

None

NOTE
An uncorrected low level condition could lead to a loss of generation due to a Turbine runback.

CONDITION	RESPONSE
1. Tank level high or low.	1. **SEND** an Operator to determine tank level.
2. Tank level high.	2. **DRAIN** to a normal level **PER** OI-10C, Stator Cooling Water System.
3. Tank level low.	3. **FILL** to a normal level **PER** OI-10C, Stator Cooling Water System.

ANNUNCIATOR COMPENSATORY ACTIONS

MONITOR Stator Coolant Tank level every four hours.

REFERENCES

61-073-C, Sheet 7A

DEVICE	SETPOINT	WINDOW	B-07
1-CA-2327A 1-CA-2327B	0.5 μmho/cm (0.4 to 0.6 μmho/cm)	STATOR COOLANT CONDUCTIVITY HI	

POSSIBLE CAUSES

- Dirty conductivity cell
- Resin exhaustion

AUTOMATIC ACTIONS

None

CONDITION	RESPONSE
1. Conductivity high.	1. Perform the following: a. **CHECK** conductivity on 1-CA-2327A and 1-CA-2327B, at Panel 1C41: • Stator Cooling Water to Generator • Stator Cooling Water from Ion Exchanger • Stator Cooling Water from Generator b. **REQUEST** Plant Chemistry sample for conductivity. c. **IF** conductivity at any of the above points is greater than the alarm setpoint **AND** less than 10.0 μmho/cm, **THEN REPLACE** the resin **PER** OI-10C, Stator Cooling Water System.
(continued)	(continued)

(continued)

(continued) **WINDOW** **B-07**

CONDITION	RESPONSE
1. (continued)	1. (continued) d. **IF** conductivity at any of the above points is greater than or equal to 10.0 μmho/cm, **THEN** EXPEDITIOUSLY **PERFORM** a controlled shutdown **AND REMOVE** the Generator from service.
2. Dirty conductivity cell.	2. **IF** conductivity is less than the alarm setpoint, **THEN INITIATE** a Condition Report to have the applicable conductivity cell(s) cleaned.

ANNUNCIATOR COMPENSATORY ACTIONS

IF the conductivity monitor is operable,
THEN MONITOR conductivity on 1C41 every four hours.

IF the conductivity monitor is inoperable,
THEN REQUEST Plant Chemistry connect a portable Conductivity Bridge and **MONITOR** every four hours.

REFERENCES

61-073-C, Sheet 7A

DEVICE	SETPOINT	WINDOW	B-08
52-1215/a 52-1315/a 86-OTS/52-1215 86-OTS/52-1315	N/A	STATOR COOLANT STBY PP RUNNING	

POSSIBLE CAUSES

- Handswitch for standby pump in Start
- Running pump discharge pressure drops to 108 to 112 psig
- Running pump discharge pressure drops to 98 to 102 psig

AUTOMATIC ACTIONS

None

NOTE
Alarm can be cleared by aligning handswitches to match pump configuration.

CONDITION	RESPONSE
1. Loss of running pump.	1. Perform the following: a. **CHECK** pump discharge pressure on 1C41 indicates 120 to 140 PSIG. b. **CHECK** Load Center 12B, Breaker 52-1215 or Load Center 13B, Breaker 52-1315 for tripped indication. c. **IF** the breaker is tripped, **THEN CONTACT** the Electric Shop to investigate. d. **IF** the breaker is **NOT** tripped, **THEN INITIATE** a Condition Report to investigate the reason for the starting of the standby pump.

ANNUNCIATOR COMPENSATORY ACTIONS

MONITOR the status of the Stator Cooling System every four hours.

(continued)

(continued) **WINDOW** **B-08**

REFERENCES

61-073-C, Sheet 10

DEVICE	SETPOINT	WINDOW	B-09
1-PDS-2333	1-PDS-2333: 8 psid (7.8 to 8.2 psid)	MAIN FILT COOLANT DIFF PRESS HI	

POSSIBLE CAUSES

- Dirty filter
- Improper valve lineup

AUTOMATIC ACTIONS

None

CONDITION	RESPONSE
1. Filter differential pressure high.	1. Perform the following: a. **DETERMINE** the cause of the alarm by checking the Main filter differential pressure using locally mounted gages 1-PI-2341 and 1-PI-2342. b. **IF** filter differential pressure exceeds 8 PSID, **THEN INITIATE** a Condition Report to have the filter cartridge replaced at the next shutdown. c. **MONITOR** Generator temperatures on a more frequent basis.

ANNUNCIATOR COMPENSATORY ACTIONS

MONITOR Generator temperatures every 4 hours.

REFERENCES

61-087-E, Sheet 2; 61-073-C, Sheet 7A; OM-904 (60-582-E)

DEVICE	SETPOINT	WINDOW	B-10
1-PDS-2325	1-PDS-2325: 2.5 psid (2.3 to 2.7 psid)	SEAL OIL • DIFF PRESS LO • LVL	
1-LS-2323	1-LS-2323 High: 18.5 inches (16.5 to 20.5 inches above lower outer plate of Seal Oil Tank) 1-LS-2323 Low: 6 inches (4 to 8 inches above lower outer plate of Seal Oil Tank)		

POSSIBLE CAUSES

- Clogging of Main filter
- Failure of Seal Oil Pressure Regulator, 1-H-19
- System leak or rupture
- Failure of Float Control Valve, 1-H-10, in Vacuum Tank

AUTOMATIC ACTIONS

None

(continued)

(continued) **WINDOW** **B-10**

CONDITION	RESPONSE
1. Seal Oil differential pressure low.	1. Perform the following: a. **CHECK** Seal Oil pressure 6 to 10 PSI above gas pressure using 1-PI-2327 on 1C42. b. **IF** the Main Generator is pressurized with hydrogen **AND** seal oil pressure is less than 2.5 PSIG, **THEN PERFORM** the following: • **REFER** to ERPIP 3.0, Immediate Actions, **AND** Attachment 22, Hazardous Material and Oil Spill Plan. • **STOP** ALL hot work in the Turbine Building. • **EVACUATE** ALL unnecessary personnel from the Turbine Building. • **START** ALL available Turbine Building Exhaust Fans. • **OPEN** both Turbine Building Rolling Doors. • **SAMPLE** Turbine Building areas for hydrogen **AND ISOLATE** areas identified with greater than 25% LEL. c. **CHECK** Main H_2 Seal Oil Pump discharge pressure on 1-PI-2326 is 100 to 110 PSIG. d. **ROTATE** the handle on the Seal Oil Cuno Filter two turns in either direction. e. **IF** Step d does **NOT** restore differential pressure to normal, **THEN THROTTLE OPEN** SEAL OIL PCV/FILTER BYPASS VALVE, 1-H-21, to maintain pressure.
(continued)	(continued)

(continued)

(continued) **WINDOW** **B-10**

CONDITION	RESPONSE
1. (continued)	1. (continued) f. **CHECK** the Seal Oil System for leaks. g. **REQUEST** Instrument Shop to investigate operation of Seal Oil Pressure Regulator, 1-H-19.
2. Vacuum Tank level low.	2. Perform the following: a. **CHECK** the Seal Oil System for leaks. b. **DETERMINE** if Float Control Valve, 1-H-10, has failed.

ANNUNCIATOR COMPENSATORY ACTIONS

MONITOR Seal Oil pressure every four hours using 1-PI-2327 on 1C42.

REFERENCES

61-087-E, Sheet 2

DEVICE	SETPOINT	WINDOW	B-11
1QR8000-1-F1: EHH1-2 1QR8000-1-A1: EHH3-4 1QR8000-2-F1: EHH5-6 1QR8000-2-A1: EHH7-8	140° C	RECTIFIER TEMP HI	

POSSIBLE CAUSES

- High rectifier temperature
- Open disconnect
- Blown fuse

AUTOMATIC ACTIONS

None

(continued)

(continued) **WINDOW** **B-11**

CONDITION	RESPONSE
1. Rectifier temperature high.	1. Perform the following: a. **CONFIRM** the alarm by checking the local recorders at the rectifier cubicles. b. **IF** all diode temperatures are approaching 165° C uncontrollably, **AND** the "LOSS OF LOAD CHANNEL TRIP BYPASS" alarm is clear, **THEN** with the concurrence of the CRS or SM: • **TRIP** the Reactor • **IMPLEMENT** EOP-0, Post Trip Immediate Actions c. **IF** all diode temperatures are approaching 165° C uncontrollably, **AND** "LOSS OF LOAD CHANNEL TRIP BYPASS" alarm is in alarm, **THEN** with the concurrence of the CRS or SM: • **TRIP** the Turbine • **IMPLEMENT** AOP-7E, Main Turbine Malfunctions d. **NOTIFY** the SO-TSO, **AND REDUCE** MVAR load to control temperature. **NOTE** A single rectifier or diode whose temperature continues to rise toward 165° C can be removed from service by opening the individual rectifier disconnect switch. e. **NOTIFY** the System Engineer.

(continued)

(continued) **WINDOW** **B-11**

ANNUNCIATOR COMPENSATORY ACTIONS

MONITOR the rectifier recorders every four hours.

REFERENCES

61-056-E; 61-087-E, Sheet 2

DEVICE	SETPOINT	WINDOW	B-12
1-PDS-4629 1-PDS-4656	100 PSID (85 to 115 PSID)	HYD FLUID FILT DIFF PRESS HI	

POSSIBLE CAUSES

- Dirty EHC pump discharge filter

AUTOMATIC ACTIONS

None

CONDITION	RESPONSE
1. Filter differential pressure high.	1. Perform the following: a. **START** the standby pump **PER** OI-9C, Main Turbine EHC System. b. **INITIATE** a high priority Condition Report for replacement of the filter. c. **RESET** the alarm using pushbutton 1-HS-4629 at local Panel 1NPO 603.

ANNUNCIATOR COMPENSATORY ACTIONS

MONITOR EHC System pressure downstream of the filter on 1-PI-4653 or 1-PI-4627 every 6 hours.

REFERENCES

61-074-E, Sheet 20A; OM-900 (60-580-E)

DEVICE	SETPOINT	WINDOW	B-13
M contact	N/A	EMERGENCY SEAL OIL PP RUNNING	

POSSIBLE CAUSES

- Main Seal Oil Pump discharge pressure drops to 93 to 97 psig
- Emergency Seal Oil pump handswitch in START

AUTOMATIC ACTIONS

None

NOTE

Prolonged operation with the Emergency Seal Oil Pump will result in decreased hydrogen purity.

(continued)

(continued) **WINDOW** **B-13**

CONDITION	RESPONSE
1. Emergency pump running.	1. Perform the following: a. **CHECK** Seal pressure is 6 to 10 PSI above gas pressure using 1-H-2327-PI, at Panel 1C42. b. **SEND** an Operator to check the Seal Oil Pump motor and Vacuum Tank oil level. c. **STOP** the Seal Oil Pump and Seal Oil Vacuum Pump. d. **INITIATE** a Condition Report to investigate the problem. e. **IF** it is determined the Main Seal Oil Pump has failed, **THEN** with CRS or SM permission: (1) **SHUTDOWN** the Main Generator **PER** OI-43A, Main Turbine And Generator/Exciter Operation. (2) **ALIGN** 2 Position VALVE, CO2 CHARGE GENERATOR BOTTOM VENT 1-G-01, to the VENT position. (3) **THROTTLE OPEN** the Generator Vent Line Isolation Valve, 1-G-03. (4) **DEPRESSURIZE** the Generator to 2 PSIG. (5) **SHUT** 1-G-03.

ANNUNCIATOR COMPENSATORY ACTIONS

MONITOR Seal Oil pressure every six hours.

REFERENCES

61-073-C, Sheet 9; 0M-902 (60-581-E)

DEVICE	SETPOINT	WINDOW	B-14
49/OL	N/A	EMERGENCY SEAL OIL PP OVERLOAD	

POSSIBLE CAUSES

- Binding of shaft
- Improper valve lineup

AUTOMATIC ACTIONS

None

CONDITION	RESPONSE
1. Pump overload.	1. Perform the following: a. **ENSURE** valves are aligned **PER** OI-10A, Seal Oil System. b. **SEND** an Operator to check the following: • Breaker 95-1306 on 13 250 VDC Bus • Emergency Oil Pump motor and shaft
(continued)	(continued)

(continued)

(continued) **WINDOW** **B-14**

CONDITION	RESPONSE
1. (continued)	1. (continued) c. **IF** the Emergency Seal Oil Pump can **NOT** be returned to service, **THEN** with CRS or SM permission: (1) **SHUTDOWN** the Main Generator **PER** OI-43A, Main Turbine And Generator/Exciter Operation. (2) **ALIGN** 2 POSITION VALVE CO2 CHARGE GENERATOR BOTTOM VENT 1-G-01, to the VENT position. (3) **THROTTLE OPEN** GENERATOR VENT LINE ISOLATION, 1-G-03. (4) **DEPRESSURIZE** the Generator to 2 PSIG. (5) **SHUT** 1-G-03.

ANNUNCIATOR COMPENSATORY ACTIONS

IF the Emergency Bearing Oil Pump is running,
THEN MONITOR the Seal Oil System every four hours.

REFERENCES

61-073-C, Sheet 9; 0M-902 (60-581-E)

DEVICE	SETPOINT	WINDOW	B-15
S Contact	N/A	EMERGENCY BRG OIL PP RUNNING	

POSSIBLE CAUSES

- Handswitch in NORMAL and less than 180 PSIG Main Lube Oil Pump discharge pressure **AND** Turning Gear Oil Pump discharge pressure less than 10 PSIG
- Handswitch in NORMAL and bearing oil header pressure less than 15 PSIG **AND** undervoltage to the Turning Gear Oil Pump
- Handswitch in START

AUTOMATIC ACTIONS

None

CONDITION	RESPONSE
1. Emergency Pump running.	1. Perform the following: a. **CHECK** pump discharge pressure greater than 30 PSIG on 1C02. b. **CHECK** bearing header pressure greater than 15 PSIG at the Main Turbine front standard. c. **IF** available, **THEN START** the Turning Gear Oil Pump. d. **DETERMINE** the cause for Turning Gear Oil Pump failure. e. **EVALUATE** the need to shutdown the Main Turbine.

ANNUNCIATOR COMPENSATORY ACTIONS

None

REFERENCES

61-074-C, Sheet 17; OM-54 (60-713-E)

DEVICE	SETPOINT	WINDOW	B-16
49/OL	N/A	EMERGENCY BRG OIL PP OVERLOAD	

POSSIBLE CAUSES

- Shaft binding
- Low oil temperature

AUTOMATIC ACTIONS

None

CONDITION	RESPONSE
1. Pump overload.	1. Perform the following: a. **START** the Turning Gear Oil Pump. b. **CHECK** Lube Oil Sump temperature on local indication or BRG OIL TEMP, 1-TI-2343, on 1C02. c. **CHECK** 13 250 VDC Bus, Breaker 95-1304. d. **IF** Lube Oil Sump temperature is less than 80° F, **THEN RAISE** the setpoint on Lube Oil Controller, 1-TIC-1626 to 85° F. e. **IF** Lube Oil Sump temperature is greater than 80° F, **THEN INITIATE** a Condition Report to determine the cause of the overload condition.

ANNUNCIATOR COMPENSATORY ACTIONS

IF the Emergency Bearing Oil Pump is in service,
THEN MONITOR bearing oil pressure every four hours.

REFERENCES

61-074-C, Sheet 17; OM-54 (60-713-E)

DEVICE	SETPOINT	WINDOW	B-17
1-LS-2322	1.5 pints H_2O (1.0 to 2.0 pints H_2O)	GEN CASING LQD DETECTOR LVL HI	

POSSIBLE CAUSES

- Hydrogen Cooler leak
- Seal Oil entering the generator
- Stator Coolant leak internal to the generator

AUTOMATIC ACTIONS

None

(continued)

(continued) **WINDOW** **B-17**

CAUTION
A rising level could ground the Generator if corrective actions are not taken.

CONDITION	RESPONSE
1. Liquid leak detector level high.	1. **DRAIN** the leak detector **PER** OI-10B, Generator Gas System.
2. Type of fluid is water.	2. Perform the following: a. **MONITOR** the Stator Water Storage Tank for indication of system leakage. b. **REQUEST** Chemistry analyze liquid drained in Step 1 for Service Water. c. **ISOLATE** one Generator Hydrogen Cooler at a time to determine the source of the leak. d. **IF** the source of the leak can be isolated, **THEN REDUCE** load as necessary to maintain generator temperatures within limits. e. **IF** the source of the leak can **NOT** be isolated **AND** leak rate is excessive as determined by the SM or CRS, **THEN PERFORM** an immediate shutdown.
(continued)	(continued)

(continued)

(continued) **WINDOW** **B-17**

CONDITION	RESPONSE
3. Type of fluid is oil.	3. Perform the following: a. **CHECK** Seal Oil pressure 6 to 10 PSIG above gas pressure using 1-PI-2327 on 1C42. b. **IF** Seal Oil pressure is greater than 10 PSIG above gas pressure, **THEN REQUEST** the Instrument Shop check operation of 1-H-19. c. **IF** Seal Oil pressure is normal **AND** leakrate is excessive as determined by the SM or CRS, **THEN PERFORM** an immediate shutdown.

ANNUNCIATOR COMPENSATORY ACTIONS

IF there is no reason to suspect a problem,
THEN DRAIN the leak detector **PER** OI-10B, Generator Gas System, once per shift.

IF there is a reason to suspect a problem,
THEN DRAIN the leak detector **PER** OI-10B, Generator Gas System at a frequency specified by the CRS or SM.

REFERENCES

61-073-C, Sheet 7A, OM-449 (60-742-E), Sheet 2

DEVICE	SETPOINT	WINDOW	B-18
1-LS-2320	1.5 Pints H_2O (1.0 to 2.0 Pints H_2O)	ALTERNATOR LQD DETECTOR LVL HI	

POSSIBLE CAUSES

- Leak in the Exciter Air Cooler

AUTOMATIC ACTIONS

None

CAUTION
A rising level could ground the alternator if corrective actions are not taken.

CONDITION	RESPONSE
1. Liquid leak detector level high.	1. Perform the following: a. **DRAIN** the leak detector **PER** OI-10B, Generator Gas System. b. **IF** the leakrate is excessive as determined by the CRS or SM, **THEN PERFORM** an immediate shutdown.

ANNUNCIATOR COMPENSATORY ACTIONS

IF there is no reason to suspect a problem,
THEN DRAIN the leak detector **PER** OI-10B, Generator Gas System once per shift.

IF there is a reason to suspect a problem,
THEN DRAIN the leak detector **PER** OI-10B, Generator Gas System at a frequency specified by the CRS or SM.

REFERENCES

61-073-C, Sheet 7A; OM-449 (60-742-E)

DEVICE	SETPOINT	WINDOW	B-19
None	None	SPARE	

POSSIBLE CAUSES

None

AUTOMATIC ACTIONS

None

CONDITION	RESPONSE
1. None	1. None

ANNUNCIATOR COMPENSATORY ACTIONS

None

REFERENCES

None

DEVICE	SETPOINT	WINDOW	B-20
1-LS-2324	1.5 Pints H_2O (1.0 to 2.0 Pints H_2O)	SEAL DRN LQD DETECTOR LVL HI	

POSSIBLE CAUSES

- FLOAT TRAP FLOAT VALVE, 1-H-2324, failed closed
- Generator side seal failure

AUTOMATIC ACTIONS

None

CAUTION

- **A rising level could back up and leak past the oil deflector into the Generator casing.**
- **If level is lost while draining, hydrogen will escape from the Generator.**

(continued)

(continued) **WINDOW** **B-20**

CONDITION	RESPONSE
1. Liquid leak detector level high.	1. Perform the following: a. **DRAIN** the leak detector **PER** OI-10B, GENERATOR GAS SYSTEM. b. **CHECK** Float Tank level at local sight glass. c. **IF** Float Tank level is high, **THEN THROTTLE OPEN** FLOAT TRAP BYP, 1-H-05 or FLOAT TRAP BYP LINE THROTTLE VLV, 1-H-81, to maintain level. d. **IF** Float Tank level can be maintained on scale in the sight glass, **THEN INITIATE** a Condition Report to repair the float valve. e. **IF** Step c. can **NOT** reduce level to on scale in the sight glass, **THEN** with SM or CRS permission, **COMMENCE** a plant shutdown.

ANNUNCIATOR COMPENSATORY ACTIONS

IF there is no reason to suspect a problem,
THEN DRAIN the leak detector **PER** OI-10B, Generator Gas System once per shift.

IF there is a reason to suspect a problem,
THEN DRAIN the leak detector **PER** OI-10B, Generator Gas System at a frequency specified by the CRS or SM.

REFERENCES

61-073-C, Sheet 7A; OM-902 (60-582-E)

DEVICE	SETPOINT	WINDOW	B-21
N/A	N/A	GEN MON STATUS PANEL	

POSSIBLE CAUSES

- Alarm condition on 1C02 Status section

AUTOMATIC ACTIONS

None

CONDITION	RESPONSE
1. Alarm received.	1. **GO TO** the response for the applicable Status Alarm.

ANNUNCIATOR COMPENSATORY ACTIONS

REFER TO the ANNUNCIATOR COMPENSATORY ACTIONS for the individual inputs from the Status Panel.

REFERENCES

61-087-E, Sheet 2

DEVICE	SETPOINT	WINDOW	B-22
1RY1T11/2B4-K8	Greater than 5771 11 GEN PHASE AMPS **AND** Stator Coolant pressure less than 28.3 PSIG or Stator Coolant outlet temperature greater than 83° C (181.4° F)	**GEN RUNBACK/TRIP CKT ENERGIZED**	

POSSIBLE CAUSES

- Loss of power to the Stator Cooling Pumps
- Failure of the standby pump to start
- Malfunctioning Stator Coolant pressure control valve (1-PCV-2333)
- Clogged Stator Coolant System main filter
- Loss of Service Water flow to the Stator Coolant Heat Exchangers

AUTOMATIC ACTIONS

> **NOTE**
> There is a 15 second time delay between the time the runback circuit is energized/enabled and activated. The times to trip are from the time the runback circuit is energized/enabled.

- TURBINE MONITOR alarms:
  - STATOR LIQUID COOLANT LOW PRESSURE RUNBACK ENABLED
  - STATOR LIQUID COOLANT HIGH TEMP RUNBACK ENABLED
  - STATOR COOLANT WATER RUNBACK ACTIVATED
- The initiating condition causes a pulsed runback to the maximum capability without stator cooling water flow for one hour to less than 5771 11 GEN PHASE AMPS
- If the generator is **NOT** reduced to less than 18,701 11 GEN PHASE AMPS in two minutes, the turbine will trip
- If 11 GEN PHASE AMPS are **NOT** reduced to less than 5771 in 3-1/2 minutes, the turbine will trip

(continued)

(continued) **WINDOW** **B-22**

NOTE
If in Load Limit, Load Set will begin running back before Turbine load begins running back.

CONDITION	RESPONSE
1. Greater than 5771 11 GEN PHASE AMPS.	1. Perform the following: a. **IF** the Reactor trips, **THEN IMPLEMENT** EOP-0, Post-Trip Immediate Actions. b. **ATTEMPT** to **START** both STATOR CLG PPs. c. **ADJUST** the Auto setpoint on TURBINE BYPASS VLV CONTR, 1-PIC-4056, as necessary to maintain SG pressure and T_{COLD}. d. **INSERT** CEAs as necessary while maintaining the CEAs above the Transient Insertion Limit. e. **IMPLEMENT** AOP-7F, Loss Of Load.

ANNUNCIATOR COMPENSATORY ACTIONS

MONITOR the status of the Stator Cooling Water system and associated alarms every four hours.

REFERENCES

12054E-0001SH0014HB; OM-904 (60-582-E)

DEVICE	SETPOINT	WINDOW	B-23
None	None	SPARE	

POSSIBLE CAUSES

None

AUTOMATIC ACTIONS

None

CONDITION	RESPONSE
1. None	1. None

ANNUNCIATOR COMPENSATORY ACTIONS

None

REFERENCES

None

DEVICE	SETPOINT	WINDOW	B-24
1-PS-4664	1.8 PSIG (1.5 to 2.1 PSIG)	STM SEAL PRESS LO	

POSSIBLE CAUSES

- Failure of MN STM SEAL REG, 1-TGS-4681-CV
- Failure of AUX STM SEAL REG, 1-TGS-4682-CV
- Failure of one or both steam dump valves
- Leak in the Steam Seal System

AUTOMATIC ACTIONS

None

(continued)

(continued) **WINDOW** **B-24**

CAUTION
Failure to restore Steam Seal Pressure could result in loss of Condenser vacuum AND cold air being drawn across the hot Turbine rotor shaft.

CONDITION	RESPONSE
1. Low steam seal pressure.	1. Perform the following: a. **CHECK** Gland Steam Header pressure is between 2 and 6 psig on 1-PI-4664. b. **SEND** an Operator to check the items listed under POSSIBLE CAUSES.
2. Failure of MN STM SEAL REG, 1-TGS-4681-CV.	2. **PERFORM** one of the following: • **PLACE** AUX STM SEAL REG, 1-TGS-4682-CV in service **PER** OI-9B, Turbine Steam Seal • **MAINTAIN** Gland Steam Header pressure between 2 and 6 psig using MS SEAL REG BYP, 1-TGS-4656-MOV, **PER** OI-9B, Turbine Steam Seal
3. Failure of AUX STM SEAL REG, 1-TGS-4682-CV.	3. **PLACE** MN STM SEAL REG, 1-TGS-4681-CV in service **PER** OI-9B, Turbine Steam Seal.
4. Failure of one or both steam dump valves.	4. **MAINTAIN** Gland Steam Header pressure between 2 and 6 psig using GLAND SEAL DUMP VLV BYP, 1-TGS-4657-MOV, **PER** OI-9B, Turbine Steam Seal.
5. Leak in the Steam Seal System.	5. **ISOLATE** the leak.

ANNUNCIATOR COMPENSATORY ACTIONS

MONITOR Steam Seal Pressure every four hours.

REFERENCES

61-087-E, Sheet 2; OM-43 (60-704-E)

DEVICE	SETPOINT	WINDOW	B-25
1RY1T11/2B4-K7	117 psi	SHAFT LUBE OIL PP DISCH PRESS LO	

POSSIBLE CAUSES

- Loss of suction pressure to the Shaft Lube Oil Pump caused by failure of Oil Driven Booster Pump and Motor Suction Pump
- Bearing oil pipe leak/rupture
- Quill Shaft failure

AUTOMATIC ACTIONS

- TURBINE MONITOR alarm, SHAFT LUBE OIL (MSOP) DISCHARGE PRESSURE LOW
- If pressure drops to 97 psi with Turbine speed above 1300 RPM, the Turbine will trip.

NOTE
Alarm only actuates when Turbine speed is above 1300 RPM.

CONDITION	RESPONSE
1. Shaft Lube Oil PP discharge pressure low.	1. **PERFORM** the following: a. **ENSURE** Motor Suction Pump is running. b. **CHECK** <Monitor><lube-hyd oil> Shaft Pump Pressure greater than 117 psi. c. **SEND** an Operator to check for: • Pressure at the Front Standard on 1-PI-2316 • System leaks
2. Pipe leak/rupture.	2. **DETERMINE** if a Turbine shutdown is required.

(continued)

(continued) **WINDOW** **B-25**

ANNUNCIATOR COMPENSATORY ACTIONS

IF Turbine speed is above 1300 RPM,
THEN MONITOR <Monitor> <lube - hyd oil> Shaft Pump Pressure or local indicator 1-PI-2316 every four hours.

REFERENCES

12054E-0001SH0014HB

DEVICE	SETPOINT	WINDOW	B-26
74/TDPU 74/10105 QSF	N/A	TURB TURN GEAR	

POSSIBLE CAUSES

- Quill shaft failure with main Turbine speed greater than 100 RPM
- Either the Turning Gear Motor does **NOT** start or engage five seconds after Turbine rotor speed is less than 2 RPM
- Loss of power to the Turning Gear Control circuit

AUTOMATIC ACTIONS

None

CONDITION	RESPONSE
1. Failure of Turning Gear to engage.	1. Perform the following: a. **CHECK** status of MCC 101AT, Breaker 52-10105. b. **IF** the breaker is tripped, **THEN REQUEST** the Electric Shop to determine if it can be closed. c. **ENGAGE** the Turning Gear manually **PER** OI-43A, Main Turbine And Generator/Exciter Operation. d. **IF** the Turning Gear can **NOT** be engaged **AND** the Turbine is hot, **THEN IMPLEMENT** AOP-7E, Main Turbine Malfunction.

ANNUNCIATOR COMPENSATORY ACTIONS

IF Turning Gear operation is required,
THEN locally **CHECK** Turning Gear operation every six hours.

REFERENCES

61-074-C, Sheet 9

DEVICE	SETPOINT	WINDOW	B-27
OLA OLC SDT-MSP	N/A	MOTOR SUCT OIL PP TRIP	

POSSIBLE CAUSES

- Short circuit in the motor or controller
- Low lube oil temperature
- Loss of power supply

AUTOMATIC ACTIONS

None

(continued)

(continued) **WINDOW** **B-27**

CONDITION	RESPONSE
1. Motor suction pump trip.	1. Perform the following: a. **START** the Turning Gear Oil Pump. b. **IF** Main Turbine speed is less than 1300 RPM, **THEN TRIP** the Turbine.
2. Low lube oil temperature.	2. Perform the following: a. **CHECK** Lube Oil Sump temperature on local indication or BRG OIL TEMP, 1-TI-2343, on 1C02. b. **IF** Lube Oil Sump temperature is less than 80° F, **THEN RAISE** the setpoint on Lube Oil Controller, 1-TIC-1626, to 85° F. c. **IF** Lube Oil Sump temperature is greater than 80° F, **THEN INITIATE** a Condition Report to determine the cause of the trip.
3. Loss of power supply.	3. Perform the following: a. **CHECK** MCC 101BT, Breaker 52-10142. b. **IF** the breaker is tripped, **THEN REQUEST** the Electric Shop to determine if it can be closed.

ANNUNCIATOR COMPENSATORY ACTIONS

IF Turbine speed is less than 1300 RPM,
THEN MONITOR Suction Oil Pump discharge pressure on local indicator 1-PI-2318 or on 1C02 every four hours.

REFERENCES

61-074-B, Sheet 19; OM-54 (60-713-E)

DEVICE	SETPOINT	WINDOW	B-28
1RY1T11/2B4-K1	15 PSIG (14.5 to 15.5 PSIG)	TURB BRG HDR OIL PRESS LO	

POSSIBLE CAUSES

- Turning Gear Oil pump fails to start
- Oil system leak
- Malfunction of Booster Pump Bearing Relief Valve

AUTOMATIC ACTIONS

TURBINE MONITOR alarm, BEARING HEADER PRESSURE LOW

NOTE
Bearing Oil Header pressure must be greater than 1 PSIG for Lift Pump operation.

CONDITION	RESPONSE
1. Bearing header pressure low.	1. Perform the following: a. **START** the Turning Gear Oil Pump. b. **START** the Emergency Bearing Oil Pump. c. **START** ALL Oil Lift Pumps. d. **CHECK** bearing oil pressure and bearing temperatures. e. **IF** bearing oil pressure remains 14.5 to 15.5 psig, **THEN SHUTDOWN** the Turbine **PER** OI-43A, Main Turbine And Generator/Exciter Operation. f. **IF** bearing oil pressure returns to normal, **THEN EVALUATE** the need to shut down the Turbine.

(continued)

(continued) **WINDOW** **B-28**

ANNUNCIATOR COMPENSATORY ACTIONS

MONITOR Bearing Oil header pressure on 1C02 or locally every four hours.

REFERENCES

12054E-0001SH0014HA; OM-54 (60-713-E)

DEVICE	SETPOINT	WINDOW	B-29
1-LS-4260	High: 33.5 inches (33 to 34 inches)	TURBINE OIL CONDITIONER TROUBLE	
1-LS-4260A	Low: 9.5 inches (9 to 10 inches)		
1B0672/74X	N/A		

POSSIBLE CAUSES

- Failure of the level control Float Valve
- Failure of the Main Lube Oil Conditioner Circulating Pump
- Alarm on 1N0672, Main Turbine L. O. Conditioner #12 Panel

AUTOMATIC ACTIONS

None

(continued)

(continued) **WINDOW** **B-29**

NOTE

- Due to the location of the Turbine Oil Conditioner with respect to the Main Oil Reservoir, the oil Conditioner will overflow if the float valve sticks open.
- 12 Lube Oil Conditioner is common to Units 1 and 2.

CONDITION	RESPONSE
1. Alarm received.	1. Perform the following: a. **CHECK** Main Lube Oil Conditioner level at the local sightglasses. b. **CHECK** 12 Lube Oil Conditioner alarm panel.
2. High level in Main Lube Oil Conditioner.	2. Perform the following: a. **SHUT** 11 MTLO CONDITIONER INLET VALVE, 1-TLO-119. b. **WHEN** Main Lube Oil Conditioner level is normal, **THEN STOP** the Main Lube Oil Conditioner Circulating Pump. c. **INITIATE** a Condition Report to determine the cause of the high level condition.
3. Low level in Main Lube Oil Conditioner.	3. Perform the following: a. **STOP** the Main Lube Oil Conditioner Circulating Pump. b. **SHUT** 11 MTLO CONDITIONER INLET VALVE, 1-TLO-119. c. **INITIATE** a Condition Report to determine the cause of the low level condition.
(continued)	(continued)

(continued)

(continued) **WINDOW** **B-29**

CONDITION	RESPONSE
4. 12 Lube Oil Conditioner local alarm.	4. Perform the following: a. **CHECK** amber lights on Panel 1N0672 to determine cause of the alarm. • FILTER NO. 1 • FILTER NO. 2 • FILTER NO. 3 • LOW FLOW SHUTDOWN • DIRTY STRAINER b. CLEAR the alarm condition **AND START** 12 Lube Oil Conditioner **PER** OI-9A, Main Turbine Lube Oil System And Main Turbine/SGFP Lube Oil Transfer System.

ANNUNCIATOR COMPENSATORY ACTIONS

MONITOR the operating Lube Oil Conditioner every four hours.

REFERENCES

61-074-B, Sheet 37; OM-54 (60-713-E)

DEVICE	SETPOINT	WINDOW	B-30
1RY1T11/2B4-K3	175 ° F 25 inHg	CNDSR EXH HOOD • TEMP HI • VAC LO	

POSSIBLE CAUSES

- Malfunction of Exhaust Hood Spray
- Low Generator load, following full load operation
- Prolonged operation at 1800 RPM, prior to loading the Generator
- Excessive air leakage into the Condenser
- Condenser Air Removal malfunction
- High Circulating Water inlet temperature

AUTOMATIC ACTIONS

TURBINE MONITOR alarms:

- LPA EXHAUST HOOD HIGH TEMP
- LPB EXHAUST HOOD HIGH TEMP
- LPC EXHAUST HOOD HIGH TEMP

(continued)

(continued) **WINDOW** **B-30**

NOTE
The turbine will trip if Exhaust hood temperature reaches 225° F or Condenser vacuum reaches 22.5 inHg.

CONDITION	RESPONSE
1. Alarm received.	1. **DETERMINE** the cause by checking: • <Monitor><LP hoods> Cndsr Vacuum • <Monitor><LP hoods> Exhaust Hood Temp • Exhaust Hood temperatures
2. Exhaust Hood temperature high.	2. **IMPLEMENT** to AOP-7E, Main Turbine Malfunction.
3. Condenser vacuum low.	3. **IMPLEMENT** AOP-7G, Loss Of Condenser Vacuum. 04106

ANNUNCIATOR COMPENSATORY ACTIONS

MONITOR Exhaust Hood temperature every 15 minutes during startup.

MONITOR Exhaust Hood temperature **AND** Condenser vacuum every four hours during steady state conditions.

REFERENCES

12054E-0001SH0014HA

DEVICE	SETPOINT	WINDOW	B-31
None	None	SPARE	

POSSIBLE CAUSES

None

AUTOMATIC ACTIONS

None

CONDITION	RESPONSE
1. None	1. None

ANNUNCIATOR COMPENSATORY ACTIONS

None

REFERENCES

None

DEVICE	SETPOINT	WINDOW	B-32
None	None	SPARE	

POSSIBLE CAUSES

None

AUTOMATIC ACTIONS

None

CONDITION	RESPONSE
1. None	1. None

ANNUNCIATOR COMPENSATORY ACTIONS

None

REFERENCES

None

DEVICE	SETPOINT	WINDOW	B-33
1MODU1T30R2/RLY1 CH-3	196 MILS 1800 MILS	TURB SUPERVISORY HI	

POSSIBLE CAUSES

- Rotor expansion greater than turbine casing expansion during heatup
- Turbine casing expansion greater than rotor expansion during heatup

AUTOMATIC ACTIONS

None

NOTE
There are no automatic trips associated with the Turbine Supervisory instruments.

(continued)

(continued) **WINDOW** **B-33**

CONDITION	RESPONSE
1. Rotor Expansion.	1. Perform the following: a. **CHECK** <Monitor><Prox> Differential Expansion. b. **IF** Differential Expansion is less than 196 MILS or greater than 1800 MILS **AND** the "LOSS OF LOAD CHANNEL TRIP BYPASS" alarm is clear, **THEN**: (1) **TRIP** the Reactor. (2) **TRIP** the Turbine. (3) **IMPLEMENT** EOP-0, Post Trip Immediate Actions. c. **IF** Differential Expansion is less than 196 MILS or greater than 1800 MILS **AND** the "LOSS OF LOAD CHANNEL TRIP BYPASS" alarm is in alarm, **THEN**: (1) **TRIP** the Turbine. (2) **IMPLEMENT** AOP-7E, Main Turbine Malfunction. d. **IF** Differential Expansion is greater than 196 MILS and less than 1800 MILS, **THEN REQUEST** the Instrument Shop determine the cause of the alarm.

ANNUNCIATOR COMPENSATORY ACTIONS

MONITOR Expansion on <Monitor><Prox> hourly.

REFERENCES

61087SH0002

DEVICE	SETPOINT	WINDOW	B-34
1RY1T11/2B4-K5	200 psi	FRONT STD EHC PRESS LO	

POSSIBLE CAUSES

Main Turbine Trip

AUTOMATIC ACTIONS

TURBINE MONITOR alarm, EMERGENCY TRIP HEADER PRESS LOW

CONDITION	RESPONSE
1. Trip setpoint exceeded **AND** Turbine did **NOT** trip.	1. Perform the following: a. **IF** the "LOSS OF LOAD CHANNEL TRIP BYPASS" alarm is clear, **THEN**: (1) **TRIP** the Reactor. (2) **TRIP** the Turbine. (3) **IMPLEMENT** EOP-0, Post Trip Immediate Actions. b. **IF** the "LOSS OF LOAD CHANNEL TRIP BYPASS" is in alarm, **THEN**: (1) **TRIP** the Turbine. (2) **IMPLEMENT** AOP-7E, Main Turbine Malfunction.
(continued)	(continued)

(continued)

(continued) **WINDOW** **B-34**

CONDITION	RESPONSE
2. Turbine tripped.	2. Perform the following: a. **IF** the "LOSS OF LOAD CHANNEL TRIP BYPASS" alarm is clear, **THEN IMPLEMENT** EOP-0, Post Trip Immediate Actions. b. **IF** the "LOSS OF LOAD CHANNEL TRIP BYPASS" is in alarm, **THEN IMPLEMENT** AOP-7E, Main Turbine Malfunction.

ANNUNCIATOR COMPENSATORY ACTIONS

MONITOR alarm window B-37.

REFERENCES

12054E-0001SH0014HA

DEVICE	SETPOINT	WINDOW	B-35
1-PS-4653 1-PS-4627	1300 PSIG (1292 to 1308 PSIG)	EHC PP DISCH PRESS LO	

POSSIBLE CAUSES

- Running pump stops
- Standby pump does not start
- Excessive flow demand on the system
- Hydraulic system pipe leak/rupture
- Dirty filter

AUTOMATIC ACTIONS

- Standby pump starts if handswitch is in NORMAL

(continued)

(continued) **WINDOW** **B-35**

NOTE
The turbine will trip if EHC pressure drops to 1100 PSIG.

WARNING
EHC fluid leaks may create a fine mist hazard, which may require respiratory protection.

CONDITION	RESPONSE
1. EHC pressure low.	1. Perform the following: a. **ENSURE** standby pump is running. b. **CHECK** <Monitor><lube-hyd oil> Main Turbine EHC Pressure greater than 1300 PSIG. c. **SEND** an Operator to check for: • System leaks • Discharge filter differential pressure (Red light energized at the EHC housing)
2. Pipe leak/rupture.	2. Perform the following: a. **ISOLATE** the leak. b. **DETERMINE** if a Turbine shutdown is required.
3. Dirty filter.	3. **INITIATE** a Condition Report to clean the filter.

ANNUNCIATOR COMPENSATORY ACTIONS

MONITOR EHC system pressure on 1C02 or locally every four hours.

REFERENCES

61-074-E, Sheet 20

DEVICE	SETPOINT	WINDOW	B-36
1-LIS-4626	High: + 4 inches on level gauge (32 inches from reservoir top) Low: - 4 inches on level gauge (40 inches from reservoir top)	TURB OIL RESVR LVL	
1-LS-4630	High: 4 inches from top of reservoir		

POSSIBLE CAUSES

- Overfilling
- Cooling water leak
- Reservoir draining
- Leak in the Lube Oil System
- Lube Oil System shutdown

AUTOMATIC ACTIONS

None

(continued)

(continued) **WINDOW** **B-36**

CONDITION	RESPONSE
1. Level high.	1. Perform the following: a. **IF** required, **THEN REDUCE** sump level **PER** OI-9A, Main Turbine Lube Oil System And Main Turbine/SGFP Lube Oil Transfer System. b. **IF** excessive water in the oil is observed, **THEN DETERMINE** if a Turbine shutdown is necessary.
2. Level low.	2. **IF** required, **THEN RAISE** sump level **PER** OI-9A, Main Turbine Lube Oil System And Main Turbine/SGFP Lube Oil Transfer System.
3. Leak in the Lube Oil System.	3. Perform the following: a. **ISOLATE** the leak, if possible. b. **DETERMINE** if a Turbine shutdown is required.

ANNUNCIATOR COMPENSATORY ACTIONS

MONITOR reservoir level every six hours.

REFERENCES

61-087-E, Sheet 2; OM-54 (60-713-E)

DEVICE	SETPOINT	WINDOW	B-37
1RY1T11/2B4-K6	Various	TURB TRIP	

POSSIBLE CAUSES

- Reactor Trip
- AXIAL THRUST POSITION TRIP ACTIVE/INACTIVE FACE (+35 mils/-35 mils)
- AXIAL THRUST PROBES FAILED - TRIP
- CONTROL ROOM/FRONT STANDARD MANUAL TRIP PB
- EMERGENCY <P> CONTROL OVERSPEED TRIP (2007 RPM)
- EXHAUST VACUUM LOW TRIP (22.5 in/Hg)
- FEEDWATER HEATER HIGH LEVEL TRIP (7 inches) (11A/B/C, 12A/B/C)
- GENERATOR LOCKOUT RELAY TRIP
- HP ACCEL/DECEL RATE TOO HIGH, LOSS OF PROT SPD SIG
- HYDRAULIC FLUID PRESSURE LOW TRIP (1100 psi)
- LP A/B/C EXHAUST HOOD HIGH TEMPERATURE TRIP (225° F)
- MOISTURE SEPARATOR 11/12 LEVEL HIGH TRIP (3 inches below bottom of MSR)
- PRIMARY <Q> CONTROL OVERSPEED TRIP (1980-1984 RPM)
- <Q> AND <P> SPEED DIFFERENCE FAULT TRIP
- <Q> HIGH ACCEL/DECEL RATE TRIP
- SHAFT LUBE OIL (MSOP) DISCHARGE PRESSURE LOW TRIP (97 psi & ≥1300 RPM)
- STATOR LIQUID COOLANT RUNBACK FAILED - TRIP (2 minute TD if runback is incomplete, 3-1/2 minute TD if runback fails)
- STEAM GENERATOR HIGH LEVEL TRIP (+50 inches)
- TURBINE BEARING HEADER PRESS LOW TRIP (8 psi)
- UNEXPECTED TRIP - ETD FAULT
- VPRO <P> EXCESSIVE ACCELERATION/DECELERATION TRIP

(continued)

(continued) **WINDOW** **B-37**

AUTOMATIC ACTIONS

None

CONDITION	RESPONSE
1. Trip setpoint exceeded **AND** Turbine did **NOT** trip.	1. Perform the following: a. **IF** the "LOSS OF LOAD CHANNEL TRIP BYPASS" alarm is clear, **THEN**: (1) **TRIP** the Reactor. (2) **TRIP** the Turbine. (3) **IMPLEMENT** EOP-0, Post Trip Immediate Actions. b. **IF** the "LOSS OF LOAD CHANNEL TRIP BYPASS" is in alarm, **THEN**: (1) **TRIP** the Turbine. (2) **IMPLEMENT** AOP-7E, Main Turbine Malfunction.
2. Turbine tripped.	2. Perform the following: a. **IF** the "LOSS OF LOAD CHANNEL TRIP BYPASS" alarm is clear, **THEN IMPLEMENT** EOP-0, Post Trip Immediate Actions. b. **IF** the "LOSS OF LOAD CHANNEL TRIP BYPASS" is in alarm, **THEN IMPLEMENT** AOP-7E, Main Turbine Malfunction.

ANNUNCIATOR COMPENSATORY ACTIONS

MONITOR Turbine trip inputs as required by the individual Compensatory Actions.

REFERENCES

12054E-0001SH0014HB

DEVICE	SETPOINT	WINDOW	B-38
1RY1T11/2B4-K4	Various	TURB CONTR TROUBLE	

POSSIBLE CAUSES

NOTE
The TURBINE MONITORs display: Major Alarms in red, Minor Alarms in blue, Diagnostic Alarms in green. Alarms that are backlit are unacknowledged.

- Major Alarms:
  - AXIAL THRUST POSITION HIGH - ACTIVE/INACTIVE FACE (+30 mils/-30 mils)
  - AXIAL THRUST POSITION PROBE 1 FAILURE
  - ETD ISOLATION VALVE STATUS UNKNOWN
  - HYDRAULIC PRESSURE TRIP SWITCH INPUTS DISAGREE
  - INTERCEPT VALVE TRIGGER EVENT OCCURRED
  - POWER LOAD UNBALANCE OCCURRED
  - <R>/<S>/<T> SLOT 7 - CV1 SERVO LOOP SUICIDED
  - <R>/<S>/<T> SLOT 7 - CV2 SERVO LOOP SUICIDED
  - <R>/<S>/<T> SLOT 7 - CV3 SERVO LOOP SUICIDED
  - <R>/<S>/<T> SLOT 7 - CV4 SERVO LOOP SUICIDED
  - <R>/<S>/<T> SLOT 8 - MSV2 SERVO LOOP SUICIDED
  - <R>/<S>/<T> SLOT 8 - IV1 SERVO LOOP SUICIDED
  - <R>/<S>/<T> SLOT 8 - IV3 SERVO LOOP SUICIDED
  - <R>/<S>/<T> SLOT 8 - IV5 SERVO LOOP SUICIDED
  - VPRO <P> EMERG OVERSPEED CONFIG ERROR
- Minor Alarms:
  - 125VDC BUS LEVEL PDM1/2 <R>/<S> MONITORING TROUBLE
  - 1T11 (MARK VI) CONTROL PANEL TEMPERATURE HIGH (113° F)
  - 1T11 (MARK VI) AC SOURCE SELECTOR AUTO TRANSFER
  - 1T11 (MARK VI) 125VDC CONT PWR UNDERVOLTAGE (90VDC)
  - 1T11 (MARK VI) 125VDC CTRL PWR GROUND DETECTED (30VDC)
  - AC LINE 1/2 FAIL
  - AT LEAST ONE SERVO REG IN CAL MODE
  - AXIAL THRUST POSITION PROBE 2/3 FAILURE
  - CONDENSER A/B/C VACUUM TRIP INPUTS DISAGREE
  - CONT ROOM TRIP PB1/TRIP RELAY 1-1 FAULT
  - CONT ROOM TRIP PB2/TRIP RELAY 2-1 FAULT
  - CONTROL VALVE #1 LVDT SPREAD ALARM
  - CONTROL VALVE #2 LVDT SPREAD ALARM
  - CONTROL VALVE #3 LVDT SPREAD ALARM
  - CONTROL VALVE #4 LVDT SPREAD ALARM
  - CV1/2/3/4 CLOSED POSITION OR FA SOLENOID FAULT
  - CV1/2/3/4 CLOSING TIME SLOW (50 sec)

04106

(continued)

(continued) **WINDOW** **B-38**

- Minor Alarms: (continued)

  - CV CHEST INNER/OUTER METAL TE FAULT
  - CV CHEST INNER/OUTER METAL TE SIGNALS FAILED
  - ETD-1A/1B/2A/2B/3A/3B TRIP TIME IS EXCESSIVE (0.75 sec)
  - ETD-1A/1B/2A/2B/3A/3B POSITION MONITOR FAULT
  - ETD-1A/1B/2A/2B/3A/3B RESET TIME IS EXCESSIVE (0.75 sec)
  - EXCESSIVE SPEED ERROR
  - EXHAUST VACUUM LP A/B/C HOOD XMTR FAULT
  - FEEDWATER HEATER LEVEL INPUTS DISAGREE
  - FORCED LOGIC SIGNAL DETECTED
  - FRONT STD TRIP PB1/TRIP RELAY 1-2 FAULT
  - FRONT STD TRIP PB2/TRIP RELAY 2-2 FAULT
  - GEN PHASE CURRENT SPREAD VGEN
  - GEN STATOR CURRENT SIGNAL SPREAD HIGH
  - GEN STATOR CURRENT SIGNAL(S) FAULT
  - GEN STATOR CURRENT SIGNAL OUT OF RANGE
  - HP SHELL INNER/OUTER METAL TE SIGNALS FAILED
  - HP SHELL INNER/OUTER METAL TE SIGNAL(S) FAULT
  - HYD TRIP SYSTEM A/B TRIP TIME EXCESSIVE
  - HYDRAULIC HEADER FLUID PRESSURE LOW (1300 psi)
  - INCOMING DACA1-1/2-1 POWER LOST
  - INTERCEPT VALVE #1 LVDT SPREAD ALARM 04106
  - INTERCEPT VALVE #2 LVDT SPREAD ALARM
  - INTERCEPT VALVE #3 LVDT SPREAD ALARM
  - INTERMEDIATE PRESSURE SIGNAL LOST
  - INTERMEDIATE STEAM PRESSURE #1/#2/#3 SIGNAL SPREAD HIGH
  - INTERMEDIATE STEAM PRESSURE #1/#2/#3 SIGNAL(S) FAULT
  - INTERMEDIATE STEAM PRESSURE #1/#2/#3 SIGNALS FAILED
  - ISV1/2/3/4/5/6 LVDT FEEDBACK FAULT
  - ISV1/2/3/4/5/6 CLOSED POSITION OR FA SOLENOID FAULT
  - ISV1/2/3/4/5/6 CLOSING TIME SLOW (18 sec)
  - IV1/2/3/4/5/6 FAST ACTING SOLENOID RELAY FAULT
  - IV1/2/3/4/5/6 CLOSED POSITION OR FA SOLENOID FAULT
  - IV1/2/3 CLOSING TIME SLOW (12 sec)
  - IV4/5/6 CLOSING TIME SLOW (9 sec)
  - IV4/5/6 LVDT FEEDBACK FAULT
  - LP-A/B/C EXHAUST HOOD TEMPERATURE TC FAILURE
  - MAIN STOP VALVE #2 LVDT SPREAD ALARM 04106
  - MSR 11/12 TRIP INPUTS DISAGREE
  - MSV1/3/4 LVDT FEEDBACK FAULT
  - ON-LINE EMERGENCY OS TEST FAULT
  - ON-LINE PRIMARY OS TEST FAULT
  - <PLU>1/2 MECH POWER SIGNAL(S) FAULT
  - <PLU>1/2 MECH POWER SIGNAL OUT OF RANGE
  - <R>/<S>/<T> PROCESSOR OFFLINE
  - SHAFT OIL (MSOP) PRESS XMTR FAULT
  - STATOR LIQUID COOLANT PRESSURE XMTR FAULT
  - STATOR LIQUID COOLANT TE1/2/3 SIGNAL FAULT
  - STATOR LIQUID COOLANT TE1/2/3 SIGNALS FAILED
  - STATOR LIQUID COOLANT TE1/2/3 SPREAD HIGH
  - STEAM GENERATOR HIGH LEVEL INPUTS DISAGREE

(continued)

(continued) **WINDOW** **B-38**

- Minor Alarms: (continued)

  - SV1/2/3/4 CLOSED POSITION OR FA SOLENOID FAULT
  - SV1/3/4 CLOSING TIME SLOW (11 sec)
  - SV2 CLOSING TIME SLOW (54 sec)
  - TURBINE SPEED PICKUP FAULT OR FAILURE
  - UCVF AIR FLOW OR OVERTEMP TROUBLE
  - UCVF OVERTEMPERATURE

- Diagnostic Alarms:

  - 86G GENERATOR LOCKOUT INPUTS DISAGREE
  - AXIAL POSITION SPREAD HIGH - CHECK SENSORS
  - BEARING HEADER PRESSURE TRANSDUCER FAULT
  - CHEST PRESSURE INPUTS DISAGREE
  - CV1/2/3/4 FAST ACTING SOLENOID RELAY(S) FAULT
  - CV CHEST INNER/OUTER METAL TE SPREAD HIGH
  - EHC PUMP 11/12 DISCHARGE PRESSURE INPUTS DISAGREE
  - ETS INPUT FAULT - INPUTS DISAGREE
  - FIRST STAGE PRESSURE TB SPREAD HIGH
  - HP SHELL INNER/OUTER METAL SIGNAL SPREAD HIGH
  - HYDRAULIC HEADER PRESSURE INPUTS DISAGREE
  - MAIN STEAM PRESSURE INPUTS DISAGREE
  - MSR 11/12 1ST STAGE PRESSURE SIGNAL SPREAD HIGH
  - MSR 11/12 1ST STAGE PRESSURE SIGNAL(S) FAULT
  - MSR 11/12 2ND STAGE PRESSURE SIGNAL SPREAD HIGH
  - MSR 11/12 2ND STAGE PRESSURE SIGNAL(S) FAULT
  - MSR 11/12 DRAIN TNK LVL INPUTS DISAGREE
  - MSR 11/12 LEVEL INPUTS DISAGREE
  - OFF-LINE EMERGENCY OVERSPEED TEST FAULT
  - OFF-LINE PRIMARY OVERSPEED TEST FAULT
  - <PDM> 1 AND/OR 2 TROUBLE
  - <PDM> 1/2 POS-NEG 125 VDC HI/LO FAULT
  - <PDM> 1/2 POS-NEG 125 VDC SPREAD HIGH
  - <PLU>1/2 MECH POWER SIGNAL SPREAD HIGH
  - <PLU>1/2 MW SIGNAL FAULT
  - <PLU>1/2 MW SIGNAL OUT OF RANGE
  - <PLU>1/2 MW SIGNALS SPREAD HIGH
  - <R>/<S>/<T> SLOT 1 VCMI DIAGNOSTIC ALARM
  - <R>/<S>/<T> SLOT 2 UCVF DIAGNOSTIC ALARM
  - <R>/<S>/<T> SLOT 4 VCRC DIAGNOSTIC ALARM
  - <R>/<S>/<T> SLOT 5 VVIB DIAGNOSTIC ALARMS
  - <R>/<S>/<T> SLOT 6 VAIC DIAGNOSTIC ALARM
  - <R>/<S>/<T> SLOT 7 VSVO DIAGNOSTIC ALARM
  - <R>/<S>/<T> SLOT 8 VSVO DIAGNOSTIC ALARM
  - <R>/<S>/<T> SLOT 9 VSVO DIAGNOSTIC ALARM
  - <R>/<S>/<T> SLOT 10 VSVO DIAGNOSTIC ALARM
  - <R>/<S>/<T> SLOT 11 VCRC DIAGNOSTIC ALARM
  - <R>/<S>/<T> SLOT 12 VAIC DIAGNOSTIC ALARM
  - <R>/<S>/<T> SLOT 13 VCRC DIAGNOSTIC ALARM
  - <R>/<S>/<T> SLOT 14 VAIC DIAGNOSTIC ALARM
  - <R>/<S>/<T> SLOT 15 VTCC DIAGNOSTIC ALARM

(continued)

(continued) **WINDOW** **B-38**

- Diagnostic Alarms: (continued)

  - <R>/<S>/<T> SLOT 16 VAIC DIAGNOSTIC ALARM
  - <R>/<S>/<T> SLOT 17 VGEN DIAGNOSTIC ALARM
  - <R>/<S>/<T> SLOT 18 VGEN DIAGNOSTIC ALARM
  - <R>/<S>/<T> SLOT 19 VTUR DIAGNOSTIC ALARM
  - <R>/<S>/<T> SLOT 20 VTUR DIAGNOSTIC ALARM
  - <R>/<S>/<T> VCMI IO STATE EXCHANGE FAILED
  - <R> <X> VPRO DIAGNOSTIC ALARM
  - <S> <Y> VPRO DIAGNOSTIC ALARM
  - <T> <Z> VPRO DIAGNOSTIC ALARM
  - SPEED LOWER INPUT TB INPUTS DISAGREE
  - SPEED RAISE INPUT TB INPUTS DISAGREE
  - STATOR LIQUID COOLANT TE FAULT

AUTOMATIC ACTIONS

TURBINE MONITOR alarms.

CONDITION	RESPONSE
1. Major Alarm.	1. **PERFORM** the following: a. **MONITOR** Turbine operation. b. **NOTIFY** the System Engineer. c. **INITIATE** a high priority Condition Report.
2. Minor Alarm.	2. **PERFORM** the following: a. **INVESTIGATE** cause of the alarm. b. **NOTIFY** the System Engineer based on the cause of the alarm. c. **INITIATE** a Condition Report.
(continued)	(continued)

(continued)

(continued) **WINDOW** **B-38**

CONDITION	RESPONSE
3. Diagnostic Alarm.	3. **PERFORM** the following: a. **INITIATE** a Condition Report. b. **NOTIFY** the System Engineer based on the cause of the alarm. c. **IF** the condition has cleared **AND** it is desired to reset the alarm, **THEN PERFORM** the following: (1) **CLICK** on MASTER RESET S1. (2) **CLICK** on DIAG RESET S1. (3) **CHECK** alarm window B-38 is clear.

ANNUNCIATOR COMPENSATORY ACTIONS

None

REFERENCES

12054E-0001SH0014HA

General Electric Technical Manual, Mark IV Control System Guide GEH-6421H; Volumes I and II

DEVICE	SETPOINT	WINDOW	B-39
52-1216/A 52-1316/A	N/A	EHC B/U PP RUNNING	

POSSIBLE CAUSES

- EHC System pressure drops to 1292 to 1308 psig
- Handswitch to start

AUTOMATIC ACTIONS

None

CONDITION	RESPONSE
1. Backup pump running.	1. Perform the following: a. **CHECK** <Monitor><lube-hyd oil> Main Turbine EHC Pressure 1400 to 1600 PSIG. b. **SEND** an Operator to check the following: • EHC System for leaks • Pump discharge filter differential pressure indication • Accumulator pressure c. **WHEN** <Monitor><lube-hyd oil> Main Turbine EHC Pressure is 1400 to 1600 PSIG, **THEN STOP** one of the running pumps.

ANNUNCIATOR COMPENSATORY ACTIONS

MONITOR EHC unit and system pressure every four hours.

REFERENCES

61-074-E, Sheet 20

DEVICE	SETPOINT	WINDOW	B-40
1-LIS-4646	High: 25 inches from top of tank (+4 inches on reservoir gage) Low: 33 inches from top of tank(- 4 inches on reservoir gage)	EHC POWER UNIT RESVR LVL	

POSSIBLE CAUSES

- Overfilling
- Service Water leak in EHC Drain Heat Exchanger
- Reservoir draining
- EHC System leak

AUTOMATIC ACTIONS

None

(continued)

(continued) **WINDOW** **B-40**

NOTE

Do **NOT** run the EHC pumps if EHC reservoir level drops to less than (-) 13 inches. EHC pump performance may become erratic at (-) 10 inches on 1-LIS-4646. Top of suction line is located approximately (-) 15 inches on 1-LIS-4646. Loss of suction will result in pump damage and turbine trip.

WARNING

EHC fluid leaks may create a fine mist hazard, which may require respiratory protection.

CONDITION	RESPONSE
1. Reservoir level low.	1. Perform the following: a. **ADD** EHC fluid **PER** OI-9C, Main Turbine EHC System. b. **CHECK** EHC System for leakage.
2. Reservoir level high.	2. Perform the following: a. **DRAIN** EHC **PER** OI-9C, Main Turbine EHC System. b. **CHECK** EHC reservoir for indication of Service Water leakage.

ANNUNCIATOR COMPENSATORY ACTIONS

MONITOR EHC Reservoir level every four hours.

REFERENCES

61-074-E, Sheet 18; OM-900 (60-580-E)

DEVICE	SETPOINT	WINDOW	V-01
1-TE-2311-1 thru 72 1-TE-2310-1 thru 72 GTMS relay 00 (1-TR-2300)	82° C 77° C	STATOR TEMP HI	

POSSIBLE CAUSES

- Stator coolant flow blockage
- Generator overheating - localized fault

AUTOMATIC ACTIONS

None

CAUTION
A quick response is required to prevent damage due to overheating which can occur in a short period of time.

CONDITION	RESPONSE
1. Stator temperature high.	1. **IMPLEMENT** AOP-7E Main Turbine Malfunction.

ANNUNCIATOR COMPENSATORY ACTIONS

OBTAIN AND REVIEW the Historical Log Printout from GTMS hourly.

REFERENCES

61-087-E, Sheet 37

DEVICE	SETPOINT	WINDOW	V-02
GTMS relay 02 (1-TR-2300) 1-TE-2311-1 thru 72 1-TE-2310-1 thru 72	Max Thermocouple Delta T 3° C Max RTD Delta T 3° C(<225 MWe) Max RTD Delta T 6° C(225-689 MWe) Max RTD Delta T 10° C(>689 MWe)	**STATOR TEMP ALERT**	

POSSIBLE CAUSES

- Stator coolant flow blockage
- Generator overheating - localized fault

AUTOMATIC ACTIONS

None

CAUTION
A quick response is required to prevent damage due to overheating which can occur in a short period of time.

CONDITION	RESPONSE
1. Stator temperature alert.	1. **IMPLEMENT** AOP-7E Main Turbine Malfunction.

ANNUNCIATOR COMPENSATORY ACTIONS

OBTAIN AND REVIEW the Historical Log Printout from GTMS hourly.

REFERENCES

61-087-E, Sheet 37

DEVICE	SETPOINT	WINDOW	V-03
GTMS Relay 03 (1-TR-2300)	Various	GTMS	

POSSIBLE CAUSES

- Low hydrogen pressure
- Low hydrogen purity
- Inadequate Stator Water cooling
- High Service Water temperature

AUTOMATIC ACTIONS

None

CONDITION	RESPONSE
1. GTMS alarm.	1. **IMPLEMENT** AOP-7E Main Turbine Malfunction.

ANNUNCIATOR COMPENSATORY ACTIONS

MONITOR alarm input parameters every two hours.

REFERENCES

61-087-E, Sheet 37

DEVICE	SETPOINT	WINDOW	V-04
1FY2333	330 GPM (329 to 345 GPM)	COOLANT • FLO • PRESS • TEMP	
1RY1T11/2B4-K2	33.5 PSIG (32.5 to 34.5 PSIG) 47° C (46° C to 48° C)		

POSSIBLE CAUSES

- Improper valve lineup
- Pressure regulator malfunction
- Temperature control valve malfunction
- High Service Water temperature
- Loss of Service Water
- Fouled cooler

AUTOMATIC ACTIONS

TURBINE MONITOR alarms:

- STATOR LIQUID COOLANT SYSTEM PRESSURE LOW
- STATOR LIQUID COOLANT HIGH TEMP

(continued)

(continued) **WINDOW** **V-04**

NOTE
Low pressure or high temperature could lead to a Turbine runback.

CONDITION	RESPONSE
1. Improper valve lineup.	1. **ENSURE** valves are aligned **PER** OI-10C, Stator Cooling Water System.
2. Pressure regulator malfunction.	2. Perform the following: a. **ENSURE** standby pump is running. b. **REQUEST** the Instrument Shop determine cause of pressure regulator malfunction. c. **IF** the regulator can **NOT** maintain adequate pressure control, **THEN DETERMINE** if a Turbine shutdown is required.
3. Temperature control valve malfunction.	3. Perform the following: a. **ENSURE** standby pump is running. b. **REQUEST** the Instrument Shop determine cause of temperature regulator malfunction. c. **IF** the temperature control valve can **NOT** maintain adequate temperature control, **THEN DETERMINE** if a Turbine shutdown is required.
(continued)	(continued)

(continued)

(continued) **WINDOW** **V-04**

CONDITION	RESPONSE
4. High Service Water temperature/loss of Service Water/fouled cooler.	4. Perform the following: a. **IF** available, **THEN START** additional Service Water Pumps. b. **REDUCE** load to maintain normal temperatures. c. **IF** fouled coolers are suspected, **THEN INITIATE** a Condition Report to have them inspected.

ANNUNCIATOR COMPENSATORY ACTIONS

MONITOR Stator Liquid Cooling System performance every four hours.

REFERENCES

61073SH0007A; 12054E-0001SH0014HB

DEVICE	SETPOINT	WINDOW	V-05
1-AE-2320	50% (49 to 51%)	GEN CORE MONITOR	

POSSIBLE CAUSES

- Local overheating **AND** insulation breakdown within the Generator
- Loss of AC power to the Core Monitor
- Loss of sample flow
- High sample pressure
- Contamination of sample flow with oil or water
- Unit in Test

AUTOMATIC ACTIONS

None

(continued)

(continued) **WINDOW** **V-05**

NOTE
If no drop in meter output is observed, a transient may have caused the alarm. A slow decline in meter output to the alarm setpoint usually indicates an instrument problem.

CONDITION	RESPONSE
1. Core Monitor alarm	1. **PERFORM** the following: (P0041) **- NOTE -** RESET pushbutton is located inside the panel under the top cover. a. **RESET** the Core Monitor locally. b. **DEPRESS** the FILTER pushbutton for 15 to 20 seconds. c. While **DEPRESSING** the FILTER pushbutton: • **CHECK** POWER on • **CHECK** gas flow set at 1.5 In/H2O • **CHECK** meter output returns to normal d. **IF** meter output does **NOT** return to a normal value when the FILTER pushbutton is depressed, **THEN** the alarm is Invalid **AND** an instrument problem exists. e. **IF** the meter output returned to normal while the FILTER pushbutton was depressed **AND** meter output declines to the alarm setpoint when the FILTER pushbutton is released, **THEN** the alarm is VALID.
(continued)	(continued)

(continued)

(continued) **WINDOW** **V-05**

CONDITION	RESPONSE
1. (continued)	1.1. (continued) f. **IF** the alarm is Valid **AND** the "LOSS OF LOAD CHANNEL TRIP BYPASS" alarm is clear, **THEN** with the concurrence of the CRS or SM: • **TRIP** the Reactor • **IMPLEMENT** EOP-0, Post Trip Immediate Actions • **NOTIFY** the SO-BP g. **IF** the alarm is VALID **AND** the "LOSS OF LOAD CHANNEL TRIP BYPASS" is in alarm, **THEN** with the concurrence of the CRS or SM: • **TRIP** the Turbine • **IMPLEMENT** AOP-7E, Main Turbine Malfunction. • **NOTIFY** the SO-BP

ANNUNCIATOR COMPENSATORY ACTIONS

MONITOR Core Monitor Meter for trends every two hours.

REFERENCES

61-073-C, Sheet 7B

DEVICE	SETPOINT	WINDOW	V-06
1-PS-2321	Low Pressure: 58 PSIG (57.5 to 58.5 PSIG)	H_2 PRESS • PURITY • TEMP	
1-PS-2322	High Pressure: 62 PSIG (61.5 to 62.5 PSIG)		
1-TI-2321	High Temperature: 51° C (50° C to 52° C) 123.8° F (122° F to 125.6° F)		
1-AI-2322	Low Purity: 95% (94% to 96%)		

POSSIBLE CAUSES

- Generator overcharging prior to startup and subsequent heatup
- Hydrogen leak
- Loss of cooling water to the heat exchangers due to an improper valve lineup
- Reduced heat transfer in the heat exchangers due to fouling
- Loss of AC power to Panel 1C41
- Prolonged operation of the Emergency Seal Oil Pump
- Low vacuum in Vacuum Tank
- Temperature Control Valve Malfunction (TCV-1608)

AUTOMATIC ACTIONS

None

(continued)

(continued) **WINDOW** **V-06**

CONDITION	RESPONSE
1. Low hydrogen pressure.	1. **PERFORM** the following: a. **IF** 1-PI-2321 indicates less than setpoint, **THEN RAISE** hydrogen pressure **PER** OI-10B, Generator Gas System. b. **IF** hydrogen pressure can **NOT** be maintained above 58 PSIG, **THEN PERFORM** the following: (1) **REFER** to ERPIP 3.0, Immediate Actions, **AND** Attachment 22, Hazardous Material and Oil Spill Plan. (2) **PERFORM** protective actions: • **STOP** ALL hot work in the Turbine Building. • **EVACUATE** ALL unnecessary personnel from the Turbine Building. • **START** ALL available Turbine Building Exhaust Fans. • **OPEN** both Turbine Building Rolling Doors. • **SAMPLE** Turbine Building areas for hydrogen **AND ISOLATE** areas identified with greater than 25% LEL. (3) With the concurrence of the CRS or SM **PERFORM** an immediate shutdown.
(continued)	(continued)

(continued) **WINDOW** **V-06**

CONDITION	RESPONSE
1. (continued)	1.b. (continued) **CAUTION** **Generator hydrogen pressure must be a minimum of 50 PSIG when the Unit is paralleled to prevent inadvertant Turbine runback on low Stator Liquid Cooling pressure.** c. **IF** hydrogen pressure can **NOT** be maintained above OI-43A, REACTIVE CAPABILITY CURVE for the existing Generator Load, **THEN** with the concurrence of the CRS or SM: (1) **TRIP** the Reactor (2) **IMPLEMENT** EOP-0, Post Trip Immediate Actions
2. Low purity.	2. **PERFORM** the following: a. **IF** 1-AI-2321 indicates less than setpoint, **THEN RAISE** hydrogen concentration **PER** OI-10B, Generator Gas System. b. **IF** hydrogen purity can **NOT** be maintained greater than 90%, **THEN** with the concurrence of the CRS or SM **PERFORM** an immediate shutdown.
3. High hydrogen pressure. (continued)	3. **IF** 1-PI-2321 indicates greater than setpoint, **THEN LOWER** hydrogen pressure **PER** OI-10B, Generator Gas System. (continued)

(continued)

(continued) **WINDOW** **V-06**

CONDITION	RESPONSE
4. Loss of power to 1C41.	4. **PERFORM** the following: a. **CHECK** power supply in Panel 1Y09C, Breaker 1Y09C-69. b. **IF** the breaker is tripped, **THEN INITIATE** a Condition Report to determine the cause.
5. Low vacuum in vacuum tank.	5. **PERFORM** the following: a. **ENSURE** the Hydrogen Seal Oil Vacuum Pump is operating properly **PER** OI-10A, Seal Oil System. b. **DRAIN** water from the Separator Tank **PER** OI-10A, Seal Oil System.
(continued)	(continued)

(continued)

(continued) **WINDOW** **V-06**

CONDITION	RESPONSE
6. High Temperature	6. **PERFORM** the following: a. **VALIDATE** High Temperature alarm by checking 1-TI-2321 reading >122° F. b. **IF** 11 GEN H_2 TEMP CONTR, 1-TIC-1608, is in automatic, **THEN PLACE** 1-TIC-1608 in MANUAL **AND ADJUST** Hydrogen temperature to approximately 100° F. c. **IF** 11 GEN H_2 TEMP CONTR, 1-TIC-1608, is in manual, **THEN ADJUST** 1-TIC-1608 to maintain Hydrogen temperature at approximately 100° F. d. **IF** temperature can not be maintained with 1-TIC-1608, **THEN OPERATE** the Bypass Valve on 1-SRW-1608-CV **PER** OI-15, Service Water System. e. **IF** the high temperature condition does not clear, **THEN IMPLEMENT** AOP-7E, Main Turbine Malfunction.

ANNUNCIATOR COMPENSATORY ACTIONS

MONITOR alarm input parameters every four hours.

REFERENCES

61-073-C, Sheets 7, 7A

DEVICE	SETPOINT	WINDOW	V-07
None	None	SPARE	

POSSIBLE CAUSES

None

AUTOMATIC ACTIONS

None

CONDITION	RESPONSE
1. None	1. None

ANNUNCIATOR COMPENSATORY ACTIONS

None

REFERENCES

None

DEVICE	SETPOINT	WINDOW	V-08
None	None	SPARE	

POSSIBLE CAUSES

None

AUTOMATIC ACTIONS

None

CONDITION	RESPONSE
1. None	1. None

ANNUNCIATOR COMPENSATORY ACTIONS

None

REFERENCES

None

CALVERT CLIFFS NUCLEAR POWER PLANT

UNIT ONE

1C05-ALM

REACTIVITY CONTROL ALARM MANUAL

REVISION 40

Safety Related

REFERRAL USE

Approval Authority: Dave Holm / 10-18-2002
signature/date

Effective Date: 10/24/2002

LIST OF EFFECTIVE PAGES

PAGE NUMBERS	REVISION
1 - 75	40

PROCEDURE ALTERATIONS

PAGE NUMBER	REVISION/CHANGE
62,64	4000
43	4001
58	4002

1.0 PURPOSE

A. This Alarm Manual provides information to the Operator for diagnosis of alarm conditions and recommended actions to mitigate the consequences of the alarm condition.

B. This Alarm Manual provides pre-planned compensatory actions that should be considered for implementation when an alarm is not available.

2.0 APPLICABILITY/SCOPE

This Alarm Manual addresses Control Room annunciator panel 1C05.

3.0 REFERENCES AND DEFINITIONS

3.1 DEVELOPMENTAL REFERENCES

A. NO-1-201, Calvert Cliffs Operating Manual.

B. NO-1-206, Alarm Annunciator Control.

C. Additional references are listed in the response for each alarm window.

3.2 PERFORMANCE REFERENCES

A. AOP-1A, Inadvertent Boron Dilution

B. AOP-1B, CEA Malfunctions

C. AOP-3E, Loss of Flow/Natural Circulation

D. AOP-3G, Malfunctions of Main Feedwater System

E. AOP-7F, Loss of Load

F. AOP-7I, Loss of 4KV, 480 Volt or 208/120 Volt Instrument Bus Power

G. AOP-7J, Loss of 120 Volt Vital AC or 125 Volt Vital DC Power

H. EOP-0, Post Trip Immediate Actions

I. OI-7, Reactor Regulating System

J. OI-30, Nuclear Instrumentation

K. OI-42, CEDM System Operation

L. OP-3, Normal Power Operation

M. CCNPP Technical Specifications

N. Technical Requirements Manual (TRM)

3.3 DEFINITIONS

None

4.0 PREREQUISITES

Specific alarm received or not available.

5.0 PRECAUTIONS

A. Inappropriate actions may result if operational decisions are based solely on single alarms without consideration of associated alarms and instrumentation.

B. In no case does the information contained herein supersede any OP, OI, AOP or EOP.

6.0 PERFORMANCE

A. Upon receipt of an alarm, **DETERMINE** its validity by comparing appropriate indications to the setpoint, if there is one:

B. **IF** multiple alarms are received,
THEN EVALUATE alarms from highest to lowest priority.

> **NOTE**
> The CONDITIONS - RESPONSES are listed in hierarchical order **NOT** as step by step instructions. Perform the response that applies to the existing condition.

C. **UTILIZING** the information for each alarm:

1. **DIAGNOSE** the condition.

2. **IMPLEMENT** the appropriate EOP or AOP
OR INITIATE appropriate responses.

7.0 POST PERFORMANCE ACTIVITIES

None

8.0 BASES

A. **[B0269]** SOER 94-02, Recommendation 4.b. Verify that appropriate monitoring and/or alarm features are available or that other interim compensatory actions are taken when the system that has the potential to affect RCS boron concentration are in an abnormal configuration.

9.0 RECORDS

None

DEVICE	SETPOINT	WINDOW	D-01
52-11, 52-15 b b	N/A	CEA TCB 11/TCB 15 TRIP	

POSSIBLE CAUSES

- Reactor Trip signal from Reactor Protection System
- Manual Reactor trip
- Loss of 120 VAC 1Y01
- Loss of 125 VDC Bus 11
- Loss of 125 VDC Distribution Panel DC 11
- Surveillance testing

AUTOMATIC ACTIONS

None

CONDITION	RESPONSE
1. Reactor trip.	1. **IMPLEMENT** EOP-0, POST TRIP IMMEDIATE ACTIONS.
2. Loss of any of the following: • 120 VAC 1Y01 • 125 VDC Bus 11 • 125 VDC Distribution Panel DC 11	2. **IMPLEMENT** AOP-7J, LOSS OF 120 VOLT VITAL AC or 125 VOLT VITAL DC POWER.
3. Spurious trip of TCB 11 or TCB 15.	3. **PERFORM** the following: a. **DETERMINE** tripped breaker by observation of 1C15 TCB mimic. b. **NOTIFY** E&C to troubleshoot and repair.

ANNUNCIATOR COMPENSATORY ACTIONS

MONITOR 1C15 TCB mimic for breaker position, at least hourly.

REFERENCES

1E-87, Sh. 4

DEVICE	SETPOINT	WINDOW	D-02
52-13, 52-17 b b	N/A	CEA TCB 13/TCB 17 TRIP	

POSSIBLE CAUSES

- Reactor Trip signal from Reactor Protection System
- Manual Reactor trip
- Loss of 120 VAC 1Y03
- Loss of 125 VDC Bus 12
- Loss of 125 VDC Distribution Panel DC 14
- Surveillance testing

AUTOMATIC ACTIONS

None

CONDITION	RESPONSE
1. Reactor trip.	1. **IMPLEMENT** EOP-0, POST TRIP IMMEDIATE ACTIONS.
2. Loss of any of the following: • 120 VAC 1Y03 • 125 VDC Bus 12 • 125 VDC Distribution Panel DC 14	2. **IMPLEMENT** AOP-7J, LOSS OF 120 VOLT VITAL AC or 125 VOLT VITAL DC POWER.
3. Spurious trip of TCB 13 or TCB 17.	3. **PERFORM** the following: a. **DETERMINE** tripped breaker by observation of 1C15 TCB mimic. b. **NOTIFY** E&C to troubleshoot and repair.

ANNUNCIATOR COMPENSATORY ACTIONS

MONITOR 1C15 TCB mimic for breaker position, at least hourly.

REFERENCES

1E-87, Sh. 4

DEVICE	SETPOINT	WINDOW	D-03
52-12, 52-16 b b	N/A	CEA TCB 12/TCB 16 TRIP	

POSSIBLE CAUSES

- Reactor Trip signal from Reactor Protection System
- Manual Reactor trip
- Loss of 120 VAC 1Y02
- Loss of 125 VDC Bus 21
- Loss of 125 VDC Distribution Panel DC 15
- Surveillance testing

AUTOMATIC ACTIONS

None

CONDITION	RESPONSE
1. Reactor trip.	1. **IMPLEMENT** EOP-0, POST TRIP IMMEDIATE ACTIONS.
2. Loss of any of the following: • 120 VAC 1Y02 • 125 VDC Bus 21 • 125 VDC Distribution Panel DC 15	2. **IMPLEMENT** AOP-7J, LOSS OF 120 VOLT VITAL AC or 125 VOLT VITAL DC POWER.
3. Spurious trip of TCB 12 or TCB 16.	3. **PERFORM** the following: a. **DETERMINE** tripped breaker by observation of 1C15 TCB mimic. b. **NOTIFY** E&C to troubleshoot and repair.

ANNUNCIATOR COMPENSATORY ACTIONS

MONITOR 1C15 TCB mimic for breaker position, at least hourly.

REFERENCES

1E-87, Sh. 4

DEVICE	SETPOINT	WINDOW	D-04
52-14, 52-18 b b	N/A	CEA TCB 14/TCB 18 TRIP	

POSSIBLE CAUSES

- Reactor Trip signal from Reactor Protection System
- Manual Reactor trip
- Loss of 120 VAC 1Y04
- Loss of 125 VDC Bus 22
- Loss of 125 VDC Distribution Panel DC 24
- Surveillance testing

AUTOMATIC ACTIONS

None

CONDITION	RESPONSE
1. Reactor trip.	1. **IMPLEMENT** EOP-0, POST TRIP IMMEDIATE ACTIONS.
2. Loss of any of the following: • 120 VAC 1Y04 • 125 VDC Bus 22 • 125 VDC Distribution Panel DC 24	2. **IMPLEMENT** AOP-7J, LOSS OF 120 VOLT VITAL AC or 125 VOLT VITAL DC POWER.
3. Spurious trip of TCB 14 or TCB 18.	3. **PERFORM** the following: a. **DETERMINE** tripped breaker by observation of 1C15 TCB mimic. b. **NOTIFY** E&C to troubleshoot and repair.

ANNUNCIATOR COMPENSATORY ACTIONS

MONITOR 1C15 TCB mimic for breaker position, at least hourly.

REFERENCES

1E-87, Sh. 4

DEVICE	SETPOINT	WINDOW	D-05
Trip of any of the following RPS Trip Units:	(P0039)	PROT CH TRIP	
High Power	105.4 (104.9 to 105.9%)		
High SUR	2.43 (2.27 to 2.59 DPM)		
Lo RCS Flow	≥92% flow		
Lo Lvl S/G	(-)46.8 ((-)40.3 to (-)49.3 inches)		
Lo Press S/G	703 (700 to 733 PSIA)		
Hi Pzr Press	2385 (2381 to 2389 PSIA)		
TM/LP or ASGT	Variable		
Loss of Load	Turbine Trip with >15% Rx Power		
Hi Cntmt Press	2.4 (2.30 to 2.47 PSIG)		
Axial Pwr	Variable		

POSSIBLE CAUSES

Any one of the NSSS parameters listed above has reached its trip setpoint.

AUTOMATIC ACTIONS

2/4 coincidence logic of channel trips results in a Reactor trip.

(continued)

(continued) **WINDOW** **D-05**

CONDITION	RESPONSE
1. Reactor trip.	1. **IMPLEMENT** EOP-0, POST TRIP IMMEDIATE ACTIONS.
2. 2 or more RPS Trip Units tripped and NO Reactor trip.	2. **TRIP** the Reactor **AND IMPLEMENT** EOP-0, POST TRIP IMMEDIATE ACTIONS.
3. Single RPS Trip Unit has tripped.	3. **PERFORM** the following: a. **DETERMINE** which RPS Trip Unit has tripped. b. **IF** it is a valid trip of the RPS Trip Unit, **THEN OPERATE** controls as necessary to return the alarmed parameter within normal operating limits. c. **IF** it is **NOT** a valid trip of the RPS Trip Unit, **THEN NOTIFY** I&C to troubleshoot and repair.

ANNUNCIATOR COMPENSATORY ACTIONS

MONITOR RPS Trip Units for tripped condition, at least hourly.

REFERENCES

1E-87, Sh. 4

DEVICE	SETPOINT	WINDOW	D-06
CEDS CEA Reed Switch position indicator	0 inches	DROPPED CEA PI	

POSSIBLE CAUSES

- Dropped CEA
- Reactor trip

AUTOMATIC ACTIONS

A dropped CEA will initiate a CMI signal.

CONDITION	RESPONSE
1. Reactor Trip.	1. **IMPLEMENT** EOP-0, POST TRIP IMMEDIATE ACTIONS.
2. Dropped CEA.	2. **IMPLEMENT** AOP-1B, CEA MALFUNCTIONS.

ANNUNCIATOR COMPENSATORY ACTIONS

MONITOR core mimic for dropped CEA indication, at least hourly.

REFERENCES

1E-87, Sh.4

DEVICE	SETPOINT	WINDOW	D-07
NONE	NONE	SPARE	

POSSIBLE CAUSES

NONE

AUTOMATIC ACTIONS

NONE

CONDITION	RESPONSE
1. NONE	1. NONE

ANNUNCIATOR COMPENSATORY ACTIONS

NONE

REFERENCES

NONE

DEVICE	SETPOINT	WINDOW	D-08
AW15, BW15, CW15, DW15	5.8% (5.8% to 6.8%) power rise from previous reset, when Reactor power is greater than 30%	HI POWER TRIP RESET DEMAND	

POSSIBLE CAUSES

- Controlled power rise **PER** OP-3, NORMAL POWER OPERATION
- Uncontrolled power excursion

AUTOMATIC ACTIONS

None

NOTE
The High Power Reset Demand setpoint is 2.6% (2.6% to 3.6%)less than the Reactor trip setpoint of 8.4% (7.4% to 9.4%) power rise from previous reset.

CONDITION	RESPONSE
1. Uncontrolled power excursion due to Boron dilution event.	1. **IMPLEMENT** AOP-1A, INADVERTENT BORON DILUTION.
2. Uncontrolled power excursion due to uncontrolled CEA withdrawal.	2. **IMPLEMENT** AOP-1B, CEA MALFUNCTIONS.
3. Hi Power Trip Reset demand due to excess steam demand.	3. **PERFORM** the following: a. **LOWER** Turbine load **AND** Reactor power (if power raised due to cooldown) to match total steam demand to Reactor power **AND** to maintain programmed TC. b. **ATTEMPT** to isolate leakage path, including but not limited to: • TBVs • ADVs • Turbine Control Valve
4. Hi Power Trip Reset demand due to controlled power rise.	4. **RESET** VOPT setpoint.

(continued)

(continued) **WINDOW** **D-08**

ANNUNCIATOR COMPENSATORY ACTIONS

- **MONITOR** 1C05 VOPT backlit pushbutton for demand to reset, at least once every 6% power rise. **[B0269]**
- Other alarms to help the operator diagnose a dilution event are as follows: **[B0269]**

PANEL	WINDOW	DESCRIPTION
1C05	D-08	HI POWER TRIP
1C05	D-12	POWER LVL HI CH PRE-TRIP
1C05	D-40	TAVG - TREF
1C06	E-07	11A/11B COLD LEG TEMP HI
1C06	E-08	12A/12B COLD LEG TEMP HI
1C07	F-18	BA FLOW
1C07	F-22	DEMIN WTR FLOW
1C07	F-25	11 BA PP DISCH PRESS LO
1C07	F-37	12 BA PP DISCH PRESS LO

REFERENCES

1E-87, Sh. 4

DEVICE	SETPOINT	WINDOW	D-09
RPS S/G Low Pressure Trip Unit	753 (750 to 783 PSIA)	SG PRESS LO CH PRE-TRIP	

POSSIBLE CAUSES

- S/G cooldown to normal cold shutdown condition
- Excess steam demand
- Steam line rupture
- LOCA

AUTOMATIC ACTIONS

None

NOTE
Reactor trip and SGIS actuate on low S/G pressure of 703 PSIA.

CONDITION	RESPONSE
1. Steam line rupture, LOCA, or Tc less than 515° F.	1. **TRIP** the reactor **AND IMPLEMENT** EOP-0, POST TRIP IMMEDIATE ACTIONS.
2. Excess steam demand in Mode 1 or 2.	2. **IMPLEMENT** AOP-7K, OVERCOOLING EVENT IN MODE ONE OR TWO.
3. Excess steam demand in Mode 3.	3. **ATTEMPT** to isolate leakage path, including but not limited to: • TBVs • ADVs • Turbine Control Valve
4. Normal plant cooldown.	4. **ENSURE** SGIS logic blocked.

ANNUNCIATOR COMPENSATORY ACTIONS

MONITOR RPS SG PRESS LO Trip Units for pre-trip condition, at least hourly.

(continued)

(continued) **WINDOW** **D-09**

REFERENCES

1E-87, Sh. 4

DEVICE	SETPOINT	WINDOW	D-10
RPS CNTMT PRESS HI Trip Unit	1.6 (1.50 to 1.67 PSIG)	CNTMT PRESS HI CH PRE-TRIP	

POSSIBLE CAUSES

Primary or secondary system rupture inside containment.

AUTOMATIC ACTIONS

None

NOTE

- Reactor trips on 2/4 logic high Containment pressure of 2.4 PSIG
- SIAS **AND** CIS are actuated on 2/4 logic high Containment pressure of 2.8 PSIG
- CSAS is actuated on 2/4 logic high Containment pressure of 4.25 PSIG

CONDITION	RESPONSE
1. 2/4 Containment high pressure pre-trips are received and the source of the pressure rise has not been determined.	1. **CONSIDER TRIPPING** the Reactor and **IMPLEMENTING** EOP-0, POST TRIP IMMEDIATE ACTIONS.
2. Containment pressure at 1.6 PSIG (1.50 to 1.67 PSIG).	2. **ATTEMPT** to identify **AND ISOLATE** the source of leakage.

ANNUNCIATOR COMPENSATORY ACTIONS

MONITOR RPS CNTMT PRESS HI Trip Units for pre-trip condition, at least hourly.

REFERENCES

1E-87, Sh. 4

DEVICE	SETPOINT	WINDOW	D-11
RPS RCS LO FLOW Trip Unit	Greater than or equal to 94% reactor flow	RC FLOW LO CH PRE-TRIP	

POSSIBLE CAUSES

- RCP trip
- Loss of 13 KV power to RCP bus that is powering the running RCPs
- Normal minimum RCP operation during plant cooldown or shutdown

AUTOMATIC ACTIONS

None

(continued)

(continued) **WINDOW** **D-11**

NOTE
Reactor trip is initiated when less than 92% RCS flow.

CONDITION	RESPONSE
1. Loss of one or more RCPs while in Mode 1 or 2.	1. **TRIP** the reactor **AND IMPLEMENT** EOP-0, POST TRIP IMMEDIATE ACTIONS.
2. Loss of one or more RCPs while in Mode 3, 4 or 5.	2. **PERFORM** the following: a. **IF** 1 RCP remains running, **THEN TRIP** the RCP **AND IMPLEMENT** AOP-3E, LOSS OF ALL RCP FLOW, MODES 3, 4, or 5. b. **IF** 2 RCPs remain running in opposite loops, **THEN TRIP** both RCPs **AND IMPLEMENT** AOP-3E, LOSS OF ALL RCP FLOW, MODES 3, 4, or 5. c. **IF** 3 RCPs remain running, **THEN TRIP** the RCP in the same loop as the tripped RCP **AND NOTIFY** E&C to troubleshoot and repair. d. **IF** 2 RCPs remain running in the same loop, **THEN NOTIFY** E&C to troubleshoot and repair.
3. Normal plant cooldown.	3. None.

ANNUNCIATOR COMPENSATORY ACTIONS

None

REFERENCES

1E-87, Sh.4

DEVICE	SETPOINT	WINDOW	D-12
RPS HI POWER Trip Unit	Variable: 8% above previous reset with: Max of 103.6% (102.4 to 104.8%) Min of 29% (28 to 30%)	POWER LVL HI CH PRE-TRIP	

POSSIBLE CAUSES

- Failure to reset the VOPT setpoint while raising reactor power
- Excessive CEA withdrawal
- Boron dilution event
- Excess steam demand
- Feedwater Regulating System malfunction
- High reactor power with no contributing malfunctions

AUTOMATIC ACTIONS

2/4 Power Level Hi Channel Pre-trip logic will initiate a CWP.

(continued)

(continued) **WINDOW** **D-12**

NOTE
A Reactor trip will occur when power is 10% greater than previous reset with a maximum of 105.4%

CONDITION	RESPONSE
1. Excessive CEA withdrawal.	1. **IMPLEMENT** AOP-1B, CEA MALFUNCTIONS.
2. Boron dilution event.	2. **IMPLEMENT** AOP-1A, INADVERTENT BORON DILUTION.
3. Excess steam demand.	3. **PERFORM** the following: a. **LOWER** Turbine load **AND** Reactor power (if power raised due to cooldown) to match total steam demand to Reactor power **AND** to maintain programmed T_C. b. **ATTEMPT** to isolate leakage path, including but not limited to: • TBVs • ADVs • Turbine Control Valve c. **IF** Reactor power and steam demand can **NOT** be matched, **THEN TRIP** the reactor **AND IMPLEMENT** EOP-0, POST TRIP IMMEDIATE ACTIONS.
4. Feedwater Regulating System malfunction.	4. **IMPLEMENT** AOP-3G, MALFUNCTION OF MAIN FEEDWATER SYSTEM.
5. High reactor power.	5. **LOWER** reactor power **PER** OP-3, NORMAL POWER OPERATION.
6. Failure to reset VOPT setpoint.	6. **RESET** VOPT setpoint.

(continued)

(continued) **WINDOW** **D-12**

ANNUNCIATOR COMPENSATORY ACTIONS

- **MONITOR** 1C05 VOPT backlit pushbutton for demand to reset, at least once every 6% power rise during power escalations conducted **PER** OP-3, NORMAL POWER OPERATION.
- **MONITOR** Reactor power indicators that intended power level is being maintained, at least every fifteen minutes.
- Other alarms to help the operator diagnose a dilution event are as follows: **[B0269]**

PANEL	WINDOW	DESCRIPTION
1C05	D-08	HI POWER TRIP
1C05	D-12	POWER LVL HI CH PRE-TRIP
1C05	D-40	TAVG - TREF
1C06	E-07	11A/11B COLD LEG TEMP HI
1C06	E-08	12A/12B COLD LEG TEMP HI
1C07	F-18	BA FLOW
1C07	F-22	DEMIN WTR FLOW
1C07	F-25	11 BA PP DISCH PRESS LO
1C07	F-37	12 BA PP DISCH PRESS LO

REFERENCES

1E-87, Sh. 4

DEVICE	SETPOINT	WINDOW	D-13
RPS LO LEVEL SG Trip Unit	(-)28.8 (-22.3 to -31.3 inches)	SG LVL LO CH PRE-TRIP	

POSSIBLE CAUSES

- Abnormal load transient
- Feedwater Regulating System malfunction
- Loss of Feedwater Flow
- Excess steam demand

AUTOMATIC ACTIONS

None

(continued)

(continued) **WINDOW** **D-13**

NOTE
A Reactor trip will occur at a S/G level of (-)46.8 inches.

CONDITION	RESPONSE
1. Abnormal load transient.	1. **PERFORM** the following: a. **ATTEMPT** to match Turbine load and Reactor power. b. **IF** Reactor power and steam demand can **NOT** be matched, **THEN TRIP** the reactor **AND IMPLEMENT** EOP-0, POST TRIP IMMEDIATE ACTIONS.
2. Feedwater regulating system malfunction or loss of Feedwater flow.	2. **IMPLEMENT** AOP-3G, MALFUNCTION OF MAIN FEEDWATER SYSTEM.
3. Excess steam demand.	3. **PERFORM** the following: a. **LOWER** Turbine load **AND** Reactor power (if power raised due to cooldown) to match total steam demand to Reactor power **AND** to maintain programmed T_C. b. **ATTEMPT** to isolate leakage path, including but not limited to: • TBVs • ADVs • Turbine Control Valve

ANNUNCIATOR COMPENSATORY ACTIONS

MONITOR S/Gs for normal level, at least hourly.

REFERENCES

1E-87, Sh. 4

DEVICE	SETPOINT	WINDOW	D-14
RPS TM/LO PRES Trip Unit	50 PSI greater than TM/LP Calculator trip setpoint (Ptrip) 100 PSID between S/Gs (ASGT pre-trip)	TM/LP CH PRE-TRIP	

POSSIBLE CAUSES

- Normal plant cooldown to cold shutdown condition
- PZR Pressure Control System malfunction
- PORV open
- LOCA
- Steam line rupture
- Single MSIV closure (S/G ΔP)
- Excess steam demand

AUTOMATIC ACTIONS

2/4 T/M PRESS LO Channel Pre-trip logic will initiate a CWP

(continued)

(continued) **WINDOW** **D-14**

NOTE
S/G ΔP of 115 PSID will initiate a TM/LP trip.

CONDITION	RESPONSE
1. LOCA or Steam Line rupture or MSIV shut.	1. **TRIP** the reactor **AND IMPLEMENT** EOP-0, POST TRIP IMMEDIATE ACTIONS.
2. PZR Pressure Control System malfunction.	2. **PERFORM** the following: a. **IF** Pressurizer Heaters are lost, **THEN ENSURE SHUT** all Pressurizer Spray Valves. b. **IF** Spray Valves failed open, **THEN ENERGIZE** all Pressurizer Heaters and attempt to shut Spray Valves in MANUAL. c. **IF** a Pressurizer Pressure Control system instrument malfunction is evident, **THEN UTILIZE** 1-HS-100 to select the alternate Pressurizer pressure indicating controller (PIC-100X or PIC-100Y).
3. PORV open.	3. **SHUT** the PORV Block valve **AND REFER** to TS 3.4.11.
(continued)	(continued)

(continued)

(continued) **WINDOW** **D-14**

CONDITION	RESPONSE
4. Excess steam demand.	4. **PERFORM** the following: a. **LOWER** Turbine load **AND** Reactor power (if power raised due to cooldown) to match total steam demand to Reactor power **AND** to maintain programmed T_C. b. **ATTEMPT** to isolate leakage path, including but not limited to: • TBVs • ADVs • Turbine Control Valve c. **IF** Reactor power and steam demand can **NOT** be matched, **THEN TRIP** the reactor **AND IMPLEMENT** EOP-0, POST TRIP IMMEDIATE ACTIONS.
5. Normal plant cooldown.	5. None.

ANNUNCIATOR COMPENSATORY ACTIONS

MONITOR TM/LP Trip Units for pre-trip condition, at least hourly.

REFERENCES

1E-87, Sh. 4

DEVICE	SETPOINT	WINDOW	D-15
RPS HI RATE Trip Unit	1.34 (1.18 to 1.5 DPM)	POWER LVL RATE HI CH PRE-TRIP	

POSSIBLE CAUSES

Positive reactivity addition while operating between 10^{-4}% and 15% power by:

- Uncontrolled CEA withdrawal
- Excessive CEA withdrawal
- Moderator temperature changes (cooldown with negative MTC, heatup with positive MTC)
- Boron dilution event **[B0269]**

AUTOMATIC ACTIONS

2/4 Power Level Rate High Channel Pre-trip logic will initiate a CWP.

NOTE
A Reactor trip will occur at 2.43 DPM when power is between 10^{-4}% and 15%.

CONDITION	RESPONSE
1. Excessive CEA withdrawal.	1. **INSERT** CEAs to lower SUR to less than 1.0 DPM.
2. Uncontrolled CEA withdrawal.	2. **IMPLEMENT** AOP-1B, CEA MALFUNCTIONS.
3. Moderator temperature changes.	3. **RESTORE** RCS temperature **AND** **INSERT** CEAs or BORATE the RCS to lower SUR to less than 1.0 DPM.
4. Boron dilution event.	4. **IMPLEMENT** AOP-1A, INADVERENT BORON DILUTION. **[B0269]**

(continued)

(continued) **WINDOW** **D-15**

ANNUNCIATOR COMPENSATORY ACTIONS

When between 10^{-4} and 15%power:

- **MONITOR** DPM meter continuously while performing positive reactivity addition.
- **MONITOR** DPM meter at least every fifteen minutes while NO positive reactivity additions are being performed.
- Other alarms to help the operator diagnose a dilution event are as follows: **[B0269]**

PANEL	WINDOW	DESCRIPTION
1C05	D-15	POWER LVL RATE HI CH PRE-TRIP
1C05	D-33	S/D MON HI
1C07	F-18	BA FLOW
1C07	F-22	DEMIN WTR FLOW
1C07	F-25	11 BA PP DISCH PRESS LO
1C07	F-37	12 BA PP DISCH PRESS LO

REFERENCES

1E-87, Sh. 4

DEVICE	SETPOINT	WINDOW	D-16
RPS HI PZR PRES Trip Unit	2335 (2331 to 2339 PSIA)	PZR PRESS HI CH PRE-TRIP	

POSSIBLE CAUSES

- PZR Pressure Control System malfunction
- Pressurizer level control system malfunction
- Loss of load

AUTOMATIC ACTIONS

None

(continued)

(continued) **WINDOW** **D-16**

NOTE
A Reactor trip is initiated at 2385 PSIA.

CONDITION	RESPONSE
1. PZR Pressure Control System malfunction.	1. **PERFORM** the following: a. **DE-ENERGIZE** Pressurizer Heaters. b. **TAKE** manual control **AND OPEN** Pressurizer Spray Valves. c. **IF** a Pressurizer Pressure Control system instrument malfunction is evident, **THEN UTILIZE** 1-HS-100 to select the alternate Pressurizer pressure indicating controller (PIC-100X or PIC-100Y).
2. Pressurizer level control system malfunction.	2. **PERFORM** the following: a. **TAKE** manual control **AND LOWER** Pressurizer level. b. **MATCH** Charging and Letdown flow. c. **NOTIFY** I&C to troubleshoot and repair.
3. Loss of load.	3. **IMPLEMENT** AOP-7F, LOSS OF LOAD.

ANNUNCIATOR COMPENSATORY ACTIONS

MONITOR Pressurizer pressure to check pressure between 2225 PSIA and 2275 PSIA, at least hourly.

REFERENCES

1E-87, Sh. 4

DEVICE	SETPOINT	WINDOW	D-17
RPS AXIAL POWER Trip Unit	Variable	AXIAL FLUX CH PRE-TRIP	

POSSIBLE CAUSES

- Misaligned CEAs
- Xenon oscillation

AUTOMATIC ACTIONS

None

CONDITION	RESPONSE
1. Misaligned CEAs.	1. **IMPLEMENT** AOP-1B, CEA MALFUNCTIONS.
2. Xenon oscillation.	2. **UTILIZE** CEAs or change power in an attempt to control ASI within the limits of the COLR. (TS 3.2.1).

ANNUNCIATOR COMPENSATORY ACTIONS

MONITOR RPS AXIAL POWER Trip Units for pre-trip condition, at least hourly.

REFERENCES

1E-87, Sh. 4

DEVICE	SETPOINT	WINDOW	D-18
A Logic DSS Logic Trip Relay S1 B Logic DSS Logic Trip Relay S1	2450 (2435 to 2465 PSIA)	DSS TRIP	

POSSIBLE CAUSES

Failure of Reactor Protection System to trip the Reactor.

AUTOMATIC ACTIONS

DSS trip acts to trip the Reactor.

CONDITION	RESPONSE
1. DSS initiated Reactor trip.	1. **IMPLEMENT** EOP-0, POST TRIP IMMEDIATE ACTIONS.

ANNUNCIATOR COMPENSATORY ACTIONS

None

REFERENCES

1E-87, Sheets 9, 14W

DEVICE	SETPOINT	WINDOW	D-19
11 MG Set Bypass Contactor (4m) Aux Contacts 12 MG Set Bypass Contactor (4m) Aux Contacts	N/A	DSS LOAD CONTACTOR BYP	

POSSIBLE CAUSES

Surveillance Testing.

AUTOMATIC ACTIONS

None

NOTE
The Diverse Scram System is inoperable when either one or both of the DSS bypass contactors are closed.

CONDITION	RESPONSE
1. DSS bypass contactors closed.	1. **INVESTIGATE** the cause of the alarm **AND RESTORE** operability of DSS at the earliest opportunity.

ANNUNCIATOR COMPENSATORY ACTIONS

None

REFERENCES

1E-87, Sheets 9, 14W

DEVICE	SETPOINT	WINDOW	D-20
Auxiliary Excore Wide Range NI, 1NX015B (Channels B & D)	N/A	AUX EXCORE WIDE RANGE NEUTRON MON SYS	

POSSIBLE CAUSES

- Output voltage level shift when a non-operate condition exists
- High or low voltage power supply voltage low
- Abnormal detector output current

AUTOMATIC ACTIONS

None

CONDITION	RESPONSE
1. Auxiliary Excore Wide Range NI trouble.	1. **PERFORM** the following: a. **NOTIFY** I&C to troubleshoot and repair. b. **REFER** to TS 3.3.11 for required actions.

ANNUNCIATOR COMPENSATORY ACTIONS

MONITOR Wide Range NIs for normal operation, at least hourly.

REFERENCES

1E-87, Sh. 4

DEVICE	SETPOINT	WINDOW	D-21
Power Range Safety Channel NIs AW10, BW10, CW10, DW10 Wide Range Channel NIs AW2, BW2, CW2, DW2	Startup Rate trip enabled between 10^{-5}% and 13% power	**S/U RATE TRIP A,B,C,D ENABLED**	

POSSIBLE CAUSES

Reactor power between 10^{-5}% and 13%.

AUTOMATIC ACTIONS

None

NOTE

High Startup Rate trip is automatically bypassed below 10^{-5}% power and above 13% power.

CONDITION	RESPONSE
1. High Startup Rate trip enabled.	1. **ENSURE** SUR is less than or equal to 1 DPM when between 10^{-5}% and 13% power.

ANNUNCIATOR COMPENSATORY ACTIONS

None

REFERENCES

1E-87, Sh. 4

DEVICE	SETPOINT	WINDOW	D-22
Automatic Loss of Load Bypass, Level 2 Bistable, AW3, BW3, CW3, DW3	14% (13.4 to 14.6%) Reactor power (decreasing)	LOSS OF LOAD CH TRIP BYP	

POSSIBLE CAUSES

Reactor power less than 14%.

AUTOMATIC ACTIONS

Loss of Load trip is automatically bypassed at 14% Reactor power (decreasing).

CONDITION	RESPONSE
1. Loss of Load trip bypassed.	1. **ENSURE** Main Turbine RESET prior to exceeding 14% power.

ANNUNCIATOR COMPENSATORY ACTIONS

None

REFERENCES

1E-87, Sh. 4

DEVICE	SETPOINT	WINDOW	D-23
RPS LO PRES SG Trip Unit Bypass Switch AW10, BW10, CW10, DW10	N/A	SG PRESS LO CH TRIP BYP	

POSSIBLE CAUSES

Any one of the four Low S/G Pressure trip channels manually bypassed with S/G pressure less than 767 PSIA.

AUTOMATIC ACTIONS

None

NOTE

Low S/G Pressure trip channel bypass is automatically removed when S/G pressure exceeds 767 PSIA.

CONDITION	RESPONSE
1. None	1. None

ANNUNCIATOR COMPENSATORY ACTIONS

None

REFERENCES

1E-87, Sh. 4

DEVICE	SETPOINT	WINDOW	D-24
Zero Power Mode Bypass Switch AW10, BW10, CW10, DW10	N/A	ZERO POWER MODE CH TRIP BYP	

POSSIBLE CAUSES

Zero Power Mode Bypass Switch in BYPASS with Reactor Power less than 10^{-4}%.

AUTOMATIC ACTIONS

None

NOTE

- Zero Power Mode Bypass bypasses the Low Flow and TM/LP trips.
- Zero Power Mode Bypass is automatically removed above 10^{-4}%.

CONDITION	RESPONSE
1. None	1. None

ANNUNCIATOR COMPENSATORY ACTIONS

None

REFERENCES

1E-87, Sh. 4

DEVICE	SETPOINT	WINDOW	D-25
Plant Computer 1C0284/1C60	Variable, power dependant	PRIMARY PRE-POWER DEPEN INSERTION	

POSSIBLE CAUSES

- CEAs inserted too far for existing power level
- Dropped CEA

AUTOMATIC ACTIONS

None

NOTE
CEA Power Dependent Insertion Limit is specified in the COLR. (TS 3.1.6)

CONDITION	RESPONSE
1. CEAs inserted too far for existing power level.	1. **PERFORM** the following: a. **BORATE** as necessary to allow withdrawal of CEAs. b. **WITHDRAW** CEAs to above PPDIL and to clear this annunciator.
2. Dropped CEA.	2. **IMPLEMENT** AOP-1B, CEA MALFUNCTIONS.

ANNUNCIATOR COMPENSATORY ACTIONS

MONITOR CEA positions **PER** TS SR 3.1.6.1 within 1 hour and once per 4 hours thereafter.

REFERENCES

1E-107, Sh. 100; 1E-87, Sh. 4

DEVICE	SETPOINT	WINDOW	D-26
Plant Computer, 1C0285/1C60	Variable, power dependant	PRIMARY POWER DEPEN INSERTION	

POSSIBLE CAUSES

- CEAs inserted too far for existing power level
- Dropped CEA

AUTOMATIC ACTIONS

None

NOTE
CEA Power Dependent Insertion Limit is specified in the COLR. (TS 3.1.6)

CONDITION	RESPONSE
1. CEAs inserted too far for existing power level.	1. **PERFORM** the following: a. **BORATE** as necessary to allow withdrawal of CEAs. b. WITHDRAW CEAs to above PDIL and to clear this annunciator.
2. Dropped CEA.	2. **IMPLEMENT** AOP-1B, CEA MALFUNCTIONS.

ANNUNCIATOR COMPENSATORY ACTIONS

MONITOR CEA positions **PER** TS SR 3.1.6.1 within 1 hour and once per 4 hours thereafter.

REFERENCES

1E-107, Sh. 100; 1E-87, Sh. 4

DEVICE	SETPOINT	WINDOW	D-27
CEAPDS, PPDILA: J68-J69	Variable, power dependant	SECONDARY PRE-POWER DEPEN INSERTION	

POSSIBLE CAUSES

- CEAs inserted too far for existing power level
- Dropped CEA

AUTOMATIC ACTIONS

None

NOTE
CEA Power Dependent Insertion Limit is specified in the COLR. (TS 3.1.6)

CONDITION	RESPONSE
1. CEAs inserted too far for existing power level.	1. **PERFORM** the following: a. **BORATE** as necessary to allow withdrawal of CEAs. b. **WITHDRAW** CEAs to above PPDIL and to clear this annunciator.
2. Dropped CEA.	2. **IMPLEMENT** AOP-1B, CEA MALFUNCTIONS.

ANNUNCIATOR COMPENSATORY ACTIONS

MONITOR CEA positions **PER** TS SR 3.1.6.1 within 1 hour and once per 4 hours thereafter.

REFERENCES

1E-87, Sh.4

DEVICE	SETPOINT	WINDOW	D-28
CEAPDS, PDILA: J70-J71	Variable, power dependant	SECONDARY POWER DEPEN INSERTION	

POSSIBLE CAUSES

- CEAs inserted too far for existing power level 4001
- Dropped CEA

AUTOMATIC ACTIONS

Secondary PDIL will initiate a CMI signal.

NOTE

- CEA Power Dependent Insertion Limit is specified in the COLR. (TS 3.1.6)
- PDIL is disabled ≤ $8x10^{-5}$% power with a 4 of 4 concidence to disable 4001

CONDITION	RESPONSE
1. CEAs inserted too far for existing power level.	1. **PERFORM** the following: a. **BORATE** as necessary to allow withdrawal of CEAs. b. **OVERRIDE** the CEA Motion Inhibit relays at 1C05 as necessary **AND** WITHDRAW CEAs to above PDIL and to clear this annunciator.
2. Dropped CEA.	2. **IMPLEMENT** AOP-1B, CEA MALFUNCTIONS.

ANNUNCIATOR COMPENSATORY ACTIONS

MONITOR CEA positions **PER** TS SR 3.1.6.1 within 1 hour and once per 4 hours thereafter.

REFERENCES

1E-87, Sh. 4

DEVICE	SETPOINT	WINDOW	D-29
Plant Computer 1C0285/1C60	CEA deviating from its group by 3.75 inches	**PRIMARY CEA POSITION DEVIATION ± 4"**	

POSSIBLE CAUSES

- Stuck or dropped CEA
- Malfunctioning Coil Power Programmer
- Misaligned CEA

AUTOMATIC ACTIONS

None

CAUTION
Undesirable flux peaking may occur if CEA deviation exists.

CONDITION	RESPONSE
1. Dropped CEA.	1. **IMPLEMENT** AOP-1B, CEA Malfunction.
2. Misaligned CEA.	2. **ALIGN** CEA as soon as practical **PER** OI-42, Section titled, CEA Leveling with Less Than 7.5 Inch Deviation.

ANNUNCIATOR COMPENSATORY ACTIONS

MONITOR CEA positions **PER** TRM TVR 15.1.4.1, at least once per 4 hours.

REFERENCES

1E-107, Sh. 100; 1E-87, Sh. 4

DEVICE	SETPOINT	WINDOW	D-30
Plant Computer 1C0285/1C60	CEA deviating from its group by 7.5 inches	PRIMARY CEA POSITION DEVIATION ± 8"	

POSSIBLE CAUSES

- Stuck or dropped CEA
- Malfunctioning Coil Power Programmer
- Misaligned CEA

AUTOMATIC ACTIONS

None

CAUTION
Undesirable flux peaking may occur if CEA deviation exists.

CONDITION	RESPONSE
1. Dropped or misaligned CEA.	1. **IMPLEMENT** AOP-1B, CEA Malfunction.

ANNUNCIATOR COMPENSATORY ACTIONS

MONITOR CEA positions **PER** TRM TVR 15.1.4.1, at least once per 4 hours.

REFERENCES

1E-107, Sh. 100; 1E-87, Sh. 4

DEVICE	SETPOINT	WINDOW	D-31
CEAPDS, DEVA: J65-J66	CEA deviating from its group by 4 inches	SECONDARY CEA POSITION DEVIATION ±4"	

POSSIBLE CAUSES

- Stuck or dropped CEA
- Malfunctioning Coil Power Programmer
- Misaligned CEA

AUTOMATIC ACTIONS

Secondary CEA position deviation will initiate a CMI signal.

CAUTION
Undesirable flux peaking may occur if CEA deviation exists.

CONDITION	RESPONSE
1. Dropped CEA.	1. **IMPLEMENT** AOP-1B, CEA MALFUNCTION.
2. Misaligned CEA.	2. **ALIGN** CEA as soon as practical **PER** OI-42, Section titled, CEA Leveling with Less Than 7.5 Inch Deviation.

ANNUNCIATOR COMPENSATORY ACTIONS

MONITOR CEA positions **PER** TRM TVR 15.1.4.1, at least once per 4 hours.

REFERENCES

1E-87, Sh.4

DEVICE	SETPOINT	WINDOW	D-32
CEDS CEA reed switch position indication system 1Q03B	N/A	CEA MOTION INHIBIT	

POSSIBLE CAUSES

- Individual CEA deviation
- Regulating Group out of sequence
- Secondary PDIL
- Withdrawal of Regulating Group prior to complete withdrawal of all shutdown CEAs
- Insertion of Shutdown Groups prior to insertion of all Regulating CEAs
- Manual operation of master CEA Motion Inhibit pushbutton at 1C05

AUTOMATIC ACTIONS

CMI prevents movement of CEAs.

(continued)

(continued) **WINDOW** **D-32**

CONDITION	RESPONSE
1. Individual CEA deviation	1. **REFER** to 1C05 window D-31.
2. Regulating Group out of sequence.	2. **REFER** to 1C05 window D-38.
3. Secondary PDIL.	3. **REFER** to 1C05 window D-28.
4. Withdrawal of Regulating Group prior to complete withdrawal of all shutdown CEAs.	4. **REFER** to 1C05 window D-34.
5. Insertion of Shutdown Groups prior to insertion of all Regulating CEAs.	5. **PERFORM** the following: a. **OVERRIDE** CMI. b. **PERFORM** one of the following: • **INSERT** all Reg Group CEAs to less than 10 inches withdrawn. • **FULLY WITHDRAW** all Shutdown CEAs.
6. Manual operation of master CEA Motion Inhibit pushbutton at 1C05.	6. None.

ANNUNCIATOR COMPENSATORY ACTIONS

MONITOR CEA positions **PER** TS SR 3.1.4.1 within 1 hour and once per 4 hours thereafter.

REFERENCES

1E-87, Sh. 4

DEVICE	SETPOINT	WINDOW	D-33
SDM 1JKI-011	Actual count rate exceeds indicated setpoint	S/D MON HI	

POSSIBLE CAUSES

Countrate rise due to any of the following:

- CEA withdrawal
- RCS boron dilution
- Fuel movement

AUTOMATIC ACTIONS

None

(continued)

(continued) **WINDOW** **D-33**

NOTE
Setpoint is automatically calculated at 150% of the previous setpoint when ALARM SETPOINT RESET pushbutton is depressed.

CONDITION	RESPONSE
1. Alarm while Reactor subcritical.	1. **IMPLEMENT** AOP-1A, INADVERTENT BORON DILUTION.
2. Alarm while Reactor startup in progress.	2. **PERFORM** the following: a. **DEPRESS** the ALARM SETPOINT RESET pushbutton to calculate a new alarm setpoint. b. **DEPRESS** the ALARM RESET pushbutton to clear alarm.
3. Alarm while Reactor is critical.	3. **NOTE** **The SDM display will indicate "LO-E-" when secured.** **SECURE the SDM PER OI-30, NUCLEAR INSTRUMENTATION.**

(continued)

(continued) **WINDOW** **D-33**

ANNUNCIATOR COMPENSATORY ACTIONS

- **MONITOR** the SDM for increasing count rate, at least every one half hour when the Reactor is subcritical. **[B0269]**
- Other alarms to help the operator diagnose a dilution event are as follows: **[B0269]**

PANEL	WINDOW	DESCRIPTION
1C05	D-15	POWER LVL RATE HI CH PRE-TRIP
1C05	D-33	S/D MON HI
1C07	F-18	BA FLOW
1C07	F-22	DEMIN WTR FLOW
1C07	F-25	11 BA PP DISCH PRESS LO
1C07	F-37	12 BA PP DISCH PRESS LO
1C13	K-40	SFP LEVEL

REFERENCES

1E-87, Sh. 4

DEVICE	SETPOINT	WINDOW	D-34
CEDS, ISHB: B3R 08-B3R 09 CEAPDS, ISHB: J73-J74	Shutdown CEA less than 129 inches withdrawn	**REG GROUP MOTION PROHIBIT**	

POSSIBLE CAUSES

- Any Shutdown CEA less than 129 inches withdrawn.
- Dropped Shutdown CEA.

AUTOMATIC ACTIONS

Regulating group motion inhibit will initiate a CMI signal.

CONDITION	RESPONSE
1. Dropped Shutdown CEA.	1. **IMPLEMENT** AOP-1B, CEA MALFUNCTIONS.
2. Shutdown CEA less than 129 inches withdrawn.	2. **IMPLEMENT** AOP-1B, CEA MALFUNCTIONS.

ANNUNCIATOR COMPENSATORY ACTIONS

None

REFERENCES

1E-87, Sh.4

DEVICE	SETPOINT	WINDOW	D-35
2/4 High Power Pre-trip 2/4 High Power Rate of Change Pre-trip 2/4 TM/LP Pre-trip	N/A	CEA WITHDRAWAL PROHIBIT	

POSSIBLE CAUSES

NSSS variables are approaching undesirable conditions resulting in:

- 2/4 Logic TM/LP Pre-Trip
- 2/4 Logic High Reactor Power Pre-Trip
- 2/4 Logic High Rate of Change of Reactor Power Pre-Trip

AUTOMATIC ACTIONS

All outward CEA motion is prevented.

CONDITION	RESPONSE
1. 2/4 Logic High Reactor Power Pre-Trip.	1. **REFER** to 1C05 window D-12.
2. 2/4 Logic TM/LP Pre-Trip.	2. **REFER** to 1C05 window D-14.
3. 2/4 Logic High Rate of Change of Reactor Power Pre-Trip.	3. **REFER** to 1C05 window D-15.

ANNUNCIATOR COMPENSATORY ACTIONS

None

REFERENCES

1E-87, Sh. 4

DEVICE	SETPOINT	WINDOW	D-36
CMI Bypass Pushbutton	N/A	CEA MOTION INHIBIT BYP	

POSSIBLE CAUSES

CMI BYPASS pushbutton depressed.

AUTOMATIC ACTIONS

None

CONDITION	RESPONSE
1. None	1. None

ANNUNCIATOR COMPENSATORY ACTIONS

None

REFERENCES

1E-87, Sh. 4

DEVICE	SETPOINT	WINDOW	D-37
CEDS, IRGB: B3R 10-B3R 11 CEAPDS, IRGB: J75-J76	All Regulating CEAs less than 10 inches withdrawn (7 to 13 inches)	**S/D GROUP INSERTION PERMISSIVE**	

POSSIBLE CAUSES

All Regulating CEAs less than 10 inches withdrawn (7 to 13 inches).

AUTOMATIC ACTIONS

Shutdown CEAs are blocked from insertion, except in manual individual, when the insertion permissive is **NOT** activated.

CONDITION	RESPONSE
1. None	1. None

ANNUNCIATOR COMPENSATORY ACTIONS

None

REFERENCES

1E-87, Sh. 4

DEVICE	SETPOINT	WINDOW	D-38
CEAPDS, OOSA: J63-J64	Out of Sequence WITHDRAWAL: Alarm: Reg Group withdrawn to 11 inches (7 to 15 inches) with preceding Reg Group less than 88 inches withdrawn Reset: preceding Reg Group withdrawn to greater than 88 inches (84 to 92 inches) Out of Sequence INSERTION: Alarm: Reg Group inserted to 128 inches (124 to 132 inches) with subsequent Reg Group greater than 48 inches withdrawn Reset: subsequent Reg Group withdrawn less than 48 inches (44 to 52 inches)	SECONDARY CEA GROUP SEQUENCE	

POSSIBLE CAUSES

- CEAs moved out of sequence in MANUAL GROUP mode
- Stuck or dropped CEA
- CEDS Regulating Bank Sequencing System (RBSS) malfunction

AUTOMATIC ACTIONS

Secondary CEA group sequence will initiate a CMI signal.

(continued)

(continued) **WINDOW** **D-38**

CAUTION
The cause of the alarm should be determined and corrected as soon as possible to preclude undesirable peaking in the core.

CONDITION	RESPONSE
1. Dropped or stuck CEA.	1. **IMPLEMENT** AOP-1B CEA MALFUNCTIONS
2. RBSS malfunction or CEAs moved out of sequence in MANUAL GROUP mode.	2. **PERFORM** the following: a. **TERMINATE** power changes and CEA movement. b. **DETERMINE** which group is out of sequence. c. **OVERRIDE** CMI. d. **RETURN** CEAs to the proper configuration as follows: (1) **IF** withdrawing CEAs, **THEN LEVEL** all CEAs in the group to the highest CEA in group. (2) **IF** inserting CEAs, **THEN LEVEL** all CEAs in the group to the lowest CEA in the group.

ANNUNCIATOR COMPENSATORY ACTIONS

MONITOR CEA position for proper sequence and overlap during CEA movement.

REFERENCES

1E-87, Sh. 4

DEVICE	SETPOINT	WINDOW	D-39
Plant Computer 1C0283/1C60	1. Distance between the closest CEAs in adjacent Reg groups is less than or equal to 86.25" when those CEAs are between the upper CEA stop(UCS) and the lower CEA stop (LCS) 2. More than 1 Reg group has a CEA between the upper sequential permissive(USP) and the lower sequential permissive(LSP)	PRIMARY CEA GROUP SEQUENCE	4002

POSSIBLE CAUSES

- CEAs moved out of sequence in MANUAL GROUP mode
- Stuck or dropped CEA
- CEDS Regulating Bank Sequencing System (RBSS) malfunction

AUTOMATIC ACTIONS

None

(continued)

(continued) **WINDOW** **D-39**

CAUTION
The cause of the alarm should be determined and corrected as soon as possible to preclude undesirable peaking in the core.

CONDITION	RESPONSE
1. Dropped or stuck CEA.	1. **IMPLEMENT** AOP-1B CEA MALFUNCTIONS
2. RBSS malfunction or CEAs moved out of sequence in MANUAL GROUP mode.	2. **PERFORM** the following: a. **TERMINATE** power changes and CEA movement. b. **DETERMINE** which group is out of sequence. c. **IF** required **THEN OVERRIDE** CMI. d. **RETURN** CEAs to the proper configuration as follows: (1) **IF** withdrawing CEAs, **THEN LEVEL** all CEAs in the group to the highest CEA in group. (2) **IF** inserting CEAs, **THEN LEVEL** all CEAs in the group to the lowest CEA in the group.

ANNUNCIATOR COMPENSATORY ACTIONS

None

REFERENCES

1E-87, Sh. 4

DEVICE	SETPOINT	WINDOW	D-40
RRS/1 (1C05; 5I, 5H) K6-1 HI (1C31; 104, 105) RRS/1 (1C05; 6L, 6A) RRS/2 (1C05; 5I, 5J) K6-1 HI (1C32; 104,105) RRS/2 (1C05; 6B, 6A) (D105, D106) RRS/1 (1C05; 6E, 6D) K5-1 LO (1C31; 102, 103) RRS/1 (1C05; 6H, 6I) RRS/2 (1C05; 6E, 6F) K5-1 LO (1C32; 102, 103) RRS/2 (1C05; 6J, 6I) (D107, D108)	T_{AVG} deviates from TREF by more than 6° F.	TAVG - TREF	

POSSIBLE CAUSES

- RRS temperature element input or channel malfunction
- Mismatch between Reactor power and Turbine load
- Boron Dilution Event **[B0269]**

AUTOMATIC ACTIONS

None

CONDITION	RESPONSE
1. Reactor power Turbine load mismatch.	1. **MATCH** Reactor power and Turbine load.
2. RRS channel malfunction.	2. **PLACE** the non-affected RRS channel in service **PER** OI-7, REACTOR REGULATING SYSTEM.
3. Temperature element malfunction.	3. **PERFORM** the following: a. **DETERMINE** which temperature element is malfunctioning. b. **PLACE** the non-affected RRS channel in service **PER** OI-7, REACTOR REGULATING SYSTEM.
4. Boron Dilution Event **[B0269]**	4. **IMPLEMENT** AOP-1A, INADVERTENT BORON DILUTION.

(continued)

(continued) **WINDOW** **D-40**

ANNUNCIATOR COMPENSATORY ACTIONS

Other alarms to help the operator diagnose a dilution event are as follows: **[B0269]**

PANEL	WINDOW	DESCRIPTION
1C05	D-08	HI POWER TRIP
1C05	D-12	POWER LVL HI CH PRE-TRIP
1C05	D-40	TAVG - TREF
1C06	E-07	11A/11B COLD LEG TEMP HI
1C06	E-08	12A/12B COLD LEG TEMP HI
1C07	F-18	BA FLOW
1C07	F-22	DEMIN WTR FLOW
1C07	F-25	11 BA PP DISCH PRESS LO
1C07	F-37	12 BA PP DISCH PRESS LO

REFERENCES

1E-87, Sh. 4

DEVICE	SETPOINT	WINDOW	D-41
AW2, 3; BW2, 3; CW2, 3; DW2, 3 1-HS-002B1 1-HS-004D1	N/A	NI CH INOPERATIVE	4000

POSSIBLE CAUSES

- One of the Power Range NI channel switches **NOT** in the OPERATE **OR** U+L/2 position
- One of the Wide Range NI channels in TEST or CALIBRATE
- Malfunction of Wide Range NI channel high voltage power supply
- One of the Remote Shutdown Wide Range NI channels Test/Status Control switches **NOT** in CTRL ROOM 4000

AUTOMATIC ACTIONS

None

(continued)

(continued) **WINDOW** **D-41**

CONDITION	RESPONSE
1. Malfunction of Wide Range or Power Range NI channel high voltage power supply.	1. **PERFORM** the following: a. **REFER** to TS 3.3.1, 3.3.2 and 3.3.12 for required actions. b. **NOTIFY** I&C to troubleshoot and repair.
2. Wide Range or Power Range NI channel in TEST or CALIBRATE.	2. **PERFORM** the following: a. **CHECK** valid surveillance on or calibration of NIs in progress. b. **IF** surveillance on or calibration of NIs **NOT** in progress **THEN PERFORM** the following: (1) **NOTIFY** the CRS. (2) **REFER** to TS 3.3.1, 3.3.2 and 3.3.12 for required actions. (3) **NOTIFY** I&C to troubleshoot and repair.
3. Power Range NI channel **NOT** in the OPERATE **OR** U+L position. 2	3. **PERFORM** the following: a. **CHECK** valid surveillance on or calibration of NIs in progress. b. **IF** surveillance on or calibration of NIs **NOT** in progress **THEN PERFORM** the following: (1) **NOTIFY** the CRS. (2) **REFER** to TS 3.3.1, 3.3.2 and 3.3.12 for required actions. (3) **NOTIFY** I&C to troubleshoot and repair.
(continued)	(continued)

(continued)

(continued) **WINDOW** **D-41**

CONDITION	RESPONSE
4. Remote Shutdown Wide Range NI channel Test/Status Control **NOT** in CTRL ROOM.	4. **PERFORM** the following: a. **CHECK** Test/Status Control switches 1-HS-002B1 **AND** 1-HS-004D1 in CTRL ROOM. b. **INITIATE** a CR.

4000

ANNUNCIATOR COMPENSATORY ACTIONS

None

REFERENCES

1E-87, Sh. 4

DEVICE	SETPOINT	WINDOW	D-42
NONE	NONE	SPARE	

POSSIBLE CAUSES

NONE

AUTOMATIC ACTIONS

NONE

CONDITION	RESPONSE
1. NONE	1. NONE

ANNUNCIATOR COMPENSATORY ACTIONS

NONE

REFERENCES

NONE

DEVICE	SETPOINT	WINDOW	D-43
Any of the four RPS channel Sigma meters indicating deviation between Nuclear power and ΔT power. AW11, BW11, CW11, DW11	Absolute difference between NI Power and ΔT Power of 3% (2.8 to 3.2%)	NUCLEAR ΔT POWER CH DEVIATION	

POSSIBLE CAUSES

- Reactor power and Turbine load mismatch
- Excore NI channel or ΔT Power Calculator malfunction
- Excore NI channel or ΔT Power Calculator out of calibration
- Load change in progress

AUTOMATIC ACTIONS

None

(continued)

(continued) **WINDOW** **D-43**

CONDITION	RESPONSE
1. Absolute difference between NI Power and ΔT Power of 3%.	1. **COMPARE** NI and power ΔT power and **DETERMINE** the cause of the mismatch: a. **VERIFY** the Power Range NI drawers are operable by ensuring the power LED is illuminated. b. **IF** Unit is at a steady state condition, **THEN PERFORM** a NI calibration **PER** OI-30, NUCLEAR INSTRUMENTATION. c. **IF** raising power and NI power is greater than ΔT power, **THEN** after achieving the new steady state condition, **PERFORM** a NI calibration **PER** OI-30, NUCLEAR INSTRUMENTATION. d. **IF** raising power and ΔT power is greater than NI power, **THEN PLACE** the Unit in a steady state condition **AND PERFORM** a NI calibration **PER** OI-30, NUCLEAR INSTRUMENTATION. e. **IF** lowering power and ΔT power is greater than NI power, **THEN** after achieving the new steady state condition, **PERFORM** a NI calibration **PER** OI-30, NUCLEAR INSTRUMENTATION. f. **IF** lowering power and NI power is greater than ΔT power, **THEN PLACE** the Unit in a steady state condition **AND PERFORM** a NI calibration **PER** OI-30, NUCLEAR INSTRUMENTATION.

(continued)

(continued) **WINDOW** **D-43**

ANNUNCIATOR COMPENSATORY ACTIONS

MONITOR RPS Nuclear Power - ΔT Power Sigma meters for absolute difference of 3%, as follows:

- Steady state: at least once every 4 hours
- During power change: at every 10% power plateau and when targeted power level is reached

REFERENCES

1E-87, Sh. 14

DEVICE	SETPOINT	WINDOW	D-44
Deviation between Power Ratio setpoint and actual power ratio DW1	Variable	POWER RATIO	

POSSIBLE CAUSES

- Flux tilt due to xenon oscillation or misaligned CEAs
- Exceeding Power Ratio setpoint deviation when using excore instrumentation

AUTOMATIC ACTIONS

None

CONDITION	RESPONSE
1. Misaligned CEAs.	1. **IMPLEMENT** AOP-1B, CEA MALFUNCTION.
2. Xenon oscillation.	2. **PERFORM** the following: a. **UTILIZE** CEAs or change power in an attempt to control ASI within the limits of the COLR. (TS 3.2.1) b. **RESTORE** actual power ratio within deviation setpoint.

ANNUNCIATOR COMPENSATORY ACTIONS

None

REFERENCES

1E-87, Sh. 4

DEVICE	SETPOINT	WINDOW	D-45
BIS16/S1 (B7-8, B7-9) 27 (U/V) relay	Loss of voltage downstream of TCB	REACTOR TRIP BUS U/V RELAY TRIP	

POSSIBLE CAUSES

- RPS generated Reactor trip
- Manual Reactor trip
- DSS generated Reactor trip

AUTOMATIC ACTIONS

- 2/4 Reactor trip bus U/V relays actuating will initiate a Turbine trip.
- Feed System goes to Post Trip alignments.

CONDITION	RESPONSE
1. Two or more U/V relays actuated.	1. **IMPLEMENT** EOP-0, POST TRIP IMMEDIATE ACTIONS.
2. Single U/V relay actuated.	2. **NOTIFY** E&C to troubleshoot and repair.

ANNUNCIATOR COMPENSATORY ACTIONS

None

REFERENCES

1E-87, Sh.4

DEVICE	SETPOINT	WINDOW	D-46
MG Set output line contactors 3M	N/A	MG SET NO OUTPUT	

POSSIBLE CAUSES

- MG Set LOAD OFF pushbutton depressed
- MG Set tripped or secured

AUTOMATIC ACTIONS

None

NOTE
MG Sets 11 and 12 share this common alarm.

CONDITION	RESPONSE
1. Both MG Sets have no output with TCBs shut.	1. **IMPLEMENT** EOP-0, POST TRIP IMMEDIATE ACTIONS.
2. Single MG Set output lost with TCB 19 closed.	2. **NOTIFY** E&C to troubleshoot and repair.

ANNUNCIATOR COMPENSATORY ACTIONS

MONITOR MG Set output contactor indication on 1C15 mimic for normal operation, at least once every 2 hours.

REFERENCES

1E-87, Sh.4

DEVICE	SETPOINT	WINDOW	D-47
52-19 b	N/A	CEA TCB 19 BUS TIE BKR OPEN	

POSSIBLE CAUSES

TCB 19 open.

AUTOMATIC ACTIONS

None

NOTE
This breaker is normally closed during operation. It can only be operated locally in the cable spreading room.

CONDITION	RESPONSE
1. TCB 19 tripped.	1. **PERFORM** the following: a. **INVESTIGATE AND DETERMINE** cause of breaker trip. b. **IF** no faults discovered or suspected, **THEN CLOSE** TCB 19.

ANNUNCIATOR COMPENSATORY ACTIONS

MONITOR TCB 19 position indication on 1C15 TCB mimic, at least hourly.

REFERENCES

1E-87, Sh.4

DEVICE	SETPOINT	WINDOW	D-48
28 VDC Voltage Sensor. One sensor per group A, B, C, 1, 2, 3, 4, 5 and 7	0 volts	CEDS NO CONTR VOLT	

POSSIBLE CAUSES

- A low voltage condition for (+)15 or (-)15 VDC in any group.
- A low voltage condition for 28 VDC in any group.

NOTE

Low voltage of +15 or -15 VDC in any group will trip the 28 VDC sensor of the associated group which annunciates this window.

AUTOMATIC ACTIONS

None

(continued)

(continued) **WINDOW** **D-48**

NOTE

- CEAs are still trippable with a loss of (+)15, (-)15 or 28 VDC power.
- A loss of (+)15, (-)15 or 28 VDC power will **NOT** cause CEA motion.
- The Group 7 power supplies feed the Group and Mode select module. With the Group 7 voltage sensor tripped, the CEDS control panel is not operational. When the Group 7 voltage sensor is reset, the control panel will momentarily energize and an output signal will be sent to all Group Programmers, and the selected CEA in each group will insert one step.

CONDITION	RESPONSE
1. 28 VDC power sensor module tripped.	1. **PERFORM** the following: a. **DETERMINE** the affected Group by observation of the power sensor modules on the back of the CEDS cabinets in the Cable Spreading room. b. **NOTIFY** I&C to troubleshoot and repair. c. **IF** the undervoltage condition was on CEDS Group 7 and the cause of undervoltage condition has been determined and repaired, **THEN PERFORM** the following: (1) **RESET** the power sensor module. (2) **RESTORE** CEA alignment.
(continued)	(continued)

(continued) **WINDOW** **D-48**

CONDITION	RESPONSE
1. (continued)	1. (continued) d. **IF** the undervoltage condition was on one of the remaining CEDS Groups and the cause of undervoltage condition has been determined and repaired, **THEN PERFORM** the following: (1) **PLACE** the CEDS control panel in OFF. (2) **RESET** the power sensor module.

ANNUNCIATOR COMPENSATORY ACTIONS

MONITOR the 28 VDC power sensor modules on the back of the CEDS cabinets in the Cable Spreading room for indication of loss of voltage, at least once per 4 hours.

REFERENCES

1E-87, Sh. 4

CALVERT CLIFFS NUCLEAR POWER PLANT

UNIT ONE

1C06-ALM

RCS CONTROL ALARM MANUAL

REVISION 48

Safety Related

REFERENCE USE

Approval Authority: Tim Riti 2/17/2009
signature/date

Effective Date: 2/25/2009

LIST OF EFFECTIVE PAGES

PAGE NUMBERS	REVISION
1-128	48

PROCEDURE ALTERATIONS

PAGE NUMBER	REVISION/CHANGE
98,99,107,108,116,117,125,126	04800

1.0 PURPOSE

A. This Alarm Manual provides information to the Operator for diagnosis of alarm conditions and recommended actions to mitigate the consequences of the alarm condition.

B. This Alarm Manual provides pre-planned compensatory actions that should be considered for implementation when an alarm is not available.

2.0 APPLICABILITY/SCOPE

This Alarm Manual addresses Control Room annunciator panel 1C06.

3.0 REFERENCES AND DEFINITIONS

3.1 DEVELOPMENTAL REFERENCES

A. NO-1-201, Calvert Cliffs Operating Manual.

B. NO-1-206, Alarm Annunciator Control

C. 1E-87 (61-087-E), Reactor Coolant System Control Board 1C06, Sh.5

D. OM-72 (60-729-E), Reactor Coolant System

E. Additional references are listed in the response for each alarm window.

3.2 PERFORMANCE REFERENCES

A. Alarm Response Manual:

- 1C05
- 1C07B
- 1C30A
- 1C31
- 1C43
- 1C144A
- 1C144B

B. AOP-2A, Excessive Reactor Coolant Leakage

C. AOP-3B, Abnormal Shutdown Cooling Conditions

D. AOP-7C, Loss of Component Cooling Water

E. AOP-7H, Loss of Plant Computer in Mode One or Two

F. EOP-0, Post-Trip Immediate Actions

G. OI-1A, Reactor Coolant System and Pump Operations

H. OI-1B, Quench Tank Operations

I. OI-1G, Reactor Coolant Vessel Head and Pressurizer Vent System

J. OI-1H, Pressurizer Pressure Control

K. OI-1I, Reactor Vessel Level Monitoring System (RVLMS)

L. OI-2B, CVCS Boration, Dilution and Makeup Operations

M. OI-37, Loose Parts Monitoring System

N. OI-50A, Plant Computer

O. OI-50B, Safety Parameter Display System

P. OP-1, Plant Startup from Cold Shutdown

Q. OP-3, Normal Power Operation

R. OP-4, Plant Shutdown from Power Operation to Hot Standby

S. OP-5, Plant Shutdown from Hot Standby to Cold Shutdown

T. STP-O-27-1, Reactor Coolant System Leakage Evaluation

U. Technical Specifications

V. EN-1-115, Recording of Plant Transients/Operational Cycles

3.3 DEFINITIONS

None

4.0 PREREQUISITES

Specific alarm received or not available.

5.0 PRECAUTIONS

A. Inappropriate actions may result if operational decisions are based solely on single alarms without consideration of associated alarms and instrumentation.

B. In no case does the information contained herein supersede an OP, OI, AOP or EOP.

6.0 PERFORMANCE

A. Upon receipt of an alarm, **DETERMINE** its validity by comparing appropriate indications to the setpoint, if there is one:

B. **IF** multiple alarms are received,
THEN EVALUATE alarms from highest to lowest priority.

NOTE
The CONDITIONS - RESPONSES are listed in hierarchical order **NOT** as step by step instructions. Perform the response that applies to the existing condition.

C. **UTILIZING** the information for each alarm:

1. **DIAGNOSE** the condition.

2. **IMPLEMENT** the appropriate EOP or AOP or **INITIATE** appropriate responses.

7.0 POST PERFORMANCE ACTIVITIES

None

8.0 BASES

[B0034]: POSRC, LER 90-11; to have the Electric Shop check the PORVs overloads if the PORVs lift.

[B0053]: NEU 90-646; Unit 1 LTOP commitments.

[B0076]: NRC INSR 90-23/23; to proceduralize manual venting of Reactor Coolant System in non-accident conditions.

[B0269]: SOER 94-02, Recommendation 4.b: Verify that appropriate monitoring and/or alarm features are available or that other interm compensatory actions are taken when systems that have the potential to affect RCS boron concentration are in the abnormal configuration.

[B0368] RCAR 96-10, recommended adding the indications of how a Bentley-Nevada vibration instrument responds when it is overranged

9.0 RECORDS

None

DEVICE	SETPOINT	WINDOW	E-01
1-TIA-116	120° F (117 to 123° F)	QUENCH TK • TEMP • LVL • PRESS	
1-PIA-116	10 PSIG (9 to 11 PSIG)		
1-LIA-116	30.5 in. (29.5 to 31.5 in.)(High) 26.5 in. (25.5 to 27.5 in.)(Low)		

POSSIBLE CAUSES

- Lifting or leaking:
  - Reactor Coolant System safety valve(s), 1-RC-200-RV or 1-RC-201-RV
  - Reactor Coolant System PORV(s), 1-RC-402-ERV or 1-RC-404-ERV
  - Safety Injection System recirculation line relief valve, 1-SI-446-RV
  - Reactor Coolant Drain Tank header relief valve, 1-RCW-4252-RV
- Leaking or open:
  - Demineralized water valve, 1-DW-5460-CV
  - Nitrogen supply valve, 0-N2-238
  - Drain to Reactor Coolant Drain Tank, 1-RC-401-CV
  - Sample valve, 1-PS-6531-CV
  - Pressurizer vent solenoid valves, 1-RC-105-SV and 1-RC-106-SV
  - Reactor Vessel vent solenoid valves, 1-RC-103-SV and 1-RC-104-SV

AUTOMATIC ACTIONS

None

(continued)

(continued) **WINDOW** **E-01**

CONDITION	RESPONSE
1. Quench Tank parameter in alarm.	1. Perform the following: a. **SHUT** any open valves listed under leaking or open Possible Causes. b. **IF** a PORV is leaking or open and fails to shut when RCS pressure is reduced below its lift setpoint, **THEN CONSIDER** placing the applicable PORV Override handswitch, 1-HS-1402 or 1-HS-1404, in OVERRIDE, **OR SHUT** PORV Block, 1-RC-403-MOV or 1-RC-405-MOV. c. **RETURN** parameter to within normal limits by venting, filling, draining or feed and bleed as necessary **PER** OI-1B, Quench Tank Operations. d. **REFER** to Technical Specifications 3.4.11 and 3.4.12 for PORV operability requirements.

ANNUNCIATOR COMPENSATORY ACTIONS

- **MONITOR** Quench Tank parameters at least hourly
- **IF** alarm card E-01 is removed from the alarm panel in the cable spreading room, **THEN LOG** the following alarm windows out of service: E-05, E-07, E-08, E-29, E-33, E-34, E-35 and E-36

REFERENCES

None

DEVICE	SETPOINT	WINDOW	E-02
None	None	SPARE	

POSSIBLE CAUSES

None

AUTOMATIC ACTIONS

None

CONDITION	RESPONSE
1. None.	1. None.

ANNUNCIATOR COMPENSATORY ACTIONS

None

REFERENCES

None

DEVICE	SETPOINT	WINDOW	E-03
None	None	SPARE	

POSSIBLE CAUSES

None

AUTOMATIC ACTIONS

None

CONDITION	RESPONSE
1. None.	1. None.

ANNUNCIATOR COMPENSATORY ACTIONS

None

REFERENCES

None

DEVICE	SETPOINT	WINDOW	E-04
1-PS-118	1850 (1825 to 1875) PSIG	RXV HEAD SEAL PRESS HI	

POSSIBLE CAUSES

1. Failure of inner reactor vessel head seal.

AUTOMATIC ACTIONS

None

CONDITION	RESPONSE
1. Reactor head seal pressure high.	1. Perform the following: a. **MONITOR** for possible Reactor Coolant System leakage into containment. b. IF Reactor Coolant System leakage is indicated, **THEN IMPLEMENT** AOP-2A, Excessive Reactor Coolant Leakage. c. **CONTACT** the Reactor Vessel System Manager immediately to assist in evaluating the impact of seal leakage.

ANNUNCIATOR COMPENSATORY ACTIONS

MONITOR the reactor vessel head closure seal leakage detector system at least once per 24 hours.

REFERENCES

Tech Spec 3.4.13

DEVICE	SETPOINT	WINDOW	E-05
1-PIA-102A 1-PIA-102B 1-PIA-102C 1-PIA-102D	2225 PSIA (2220 to 2230 PSIA) 1875 PSIA (1870 to 1880 PSIA)	**TM/LP TRIP SETPOINT**	

POSSIBLE CAUSES

- Malfunction of Thermal Margin Low Pressure Calculator
- Plant cooldown
- ASGT condition

AUTOMATIC ACTIONS

ASGT will fail this calculated setpoint high into alarm.

CONDITION	RESPONSE
1. TM/LP setpoint tripped.	1. Perform the following: a. **DETERMINE** which channel(s) are in alarm. b. **IF** TM/LP trip setpoint is alarming high, **THEN COMPARE** 11 and 12 Steam Generators pressures to determine if an ASGT condition exists. c. **IF** a malfunction of the TM/LP Calculator is indicated, **THEN REFER** to Technical Specification 3.3.1.

ANNUNCIATOR COMPENSATORY ACTIONS

MONITOR the Pressurizer pressure safety channels at least hourly.

REFERENCES

None

DEVICE	SETPOINT	WINDOW	E-06
1-TIA-102	300° F (290 to 310° F)	RXV/PZR VENT LINE TEMP HI	

POSSIBLE CAUSES

- Reactor Vessel to Quench Tank Vents, 1-RC-103-SV and 1-RC-104-SV, leaking
- Pressurizer to Quench Tank Vents, 1-RC-105-SV and 1-RC-106-SV, leaking
- Venting the reactor vessel head or Pressurizer **PER** OI-1G, Reactor Coolant Vessel Head and Pressurizer Vent System

AUTOMATIC ACTIONS

None

CONDITION	RESPONSE
1. Vent line high temperature.	1. Perform the following: a. **IF** alarm is **NOT** anticipated due to venting, **THEN DETERMINE** Reactor Coolant System leakage **PER** STP-O-27-1, Reactor Coolant System Leakage Evaluation. b. **IF** either Reactor Vessel or Pressurizer Vent becomes inoperable, **THEN REFER** to TRM 15.4.6.

ANNUNCIATOR COMPENSATORY ACTIONS

MONITOR the vent line temperature at least hourly.

REFERENCES

1E-76 (61-076-C), Sh.47

DEVICE	SETPOINT	WINDOW	E-07
1-TIA-115	551° F (550 to 552° F)	11A/11B COLD LEG TEMP HI	

POSSIBLE CAUSES

- Failure to compensate for positive reactivity addition **[B0269]**
- Turbine load rejection
- Turbine malfunction

AUTOMATIC ACTIONS

Excessive temperature rise may cause Reactor Coolant System pressure to rise significantly. Adhere to Technical Specification 3.4.1, DNB related parameters.

CONDITION	RESPONSE
1. Reactor Coolant System cold leg temperature high.	1. **MAINTAIN** Reactor Coolant System program Tc by any combination of the following: • Inserting Regulating CEAs • Fast borating **PER** OI-2B, CVCS Boration, Dilution and Makeup Operations **[B0269]** • Matching turbine load with reactor power

(continued)

(continued) **WINDOW** **E-07**

ANNUNCIATOR COMPENSATORY ACTIONS

- **MONITOR** Reactor Coolant System cold leg temperatures at least hourly. **[B0269]**
- Other alarms to help the operator diagnose a dilution event are as follows: **[B0269]**

PANEL	WINDOW	DESCRIPTION
1C05	D-08	HI POWER TRIP
1C05	D-12	POWER LVL HI CH PRE-TRIP
1C05	D-40	Tave - Tref
1C06	E-07	11A/11B COLD LEG TEMP HI
1C06	E-08	12A/12B COLD LEG TEMP HI
1C07	F-18	BA FLOW
1C07	F-22	DEMIN WTR FLOW
1C07	F-25	11 BA PP DISCH PRESS LO
1C07	F-37	12 BA PP DISCH PRESS LO

REFERENCES

None

DEVICE	SETPOINT	WINDOW	E-08
1-TIA-125	551° F (550 to 552° F)	12A/12B COLD LEG TEMP HI	

POSSIBLE CAUSES

- Failure to compensate for positive reactivity addition **[B0269]**
- Turbine load rejection
- Turbine malfunction

AUTOMATIC ACTIONS

Excessive temperature rise may cause Reactor Coolant System pressure to rise significantly. Adhere to Technical Specification 3.4.1, DNB related parameters.

CONDITION	RESPONSE
1. Reactor Coolant System cold leg temperature high.	1. **MAINTAIN** Reactor Coolant System program Tc by any combination of the following: • Inserting Regulating CEAs • Fast borating **PER** OI-2B, CVCS Boration, Dilution and Makeup Operations **[B0269]** • Matching turbine load with reactor power

(continued)

(continued) **WINDOW** **E-08**

ANNUNCIATOR COMPENSATORY ACTIONS

- **MONITOR** Reactor Coolant System cold leg temperatures at least hourly. **[B0269]**
- Other alarms to help the operator diagnose a dilution event are as follows: **[B0269]**

PANEL	WINDOW	DESCRIPTION
1C05	D-08	HI POWER TRIP
1C05	D-12	POWER LVL HI CH PRE-TRIP
1C05	D-40	Tave - Tref
1C06	E-07	11A/11B COLD LEG TEMP HI
1C06	E-08	12A/12B COLD LEG TEMP HI
1C07	F-18	BA FLOW
1C07	F-22	DEMIN WTR FLOW
1C07	F-25	11 BA PP DISCH PRESS LO
1C07	F-37	12 BA PP DISCH PRESS LO

REFERENCES

None

DEVICE	SETPOINT	WINDOW	E-09
RVLMS Cabinet 1C144A or 1C144B	Reactor vessel water level less than 100% full as indicated by 1 or more level sensors uncovered as indicated on PAMS FPD	RXV WTR LVL LO	

POSSIBLE CAUSES

- Draining the Reactor Coolant System
- Void formation in the reactor vessel head
- Heated Junction Thermocouple developed an open circuit

AUTOMATIC ACTIONS

None

(continued)

(continued) **WINDOW** **E-09**

NOTE
Check FPD default screens indication and the HEATED JUNCTION THERMOCOUPLE screen to determine alarm condition.

CONDITION	RESPONSE
1. Reactor vessel water level low.	1. Perform the following: a. **IF** the low level alarm was caused by an unanticipated loss of reactor coolant, **THEN IMPLEMENT** AOP-2A, Excessive Reactor Coolant Leakage. b. **IF** the reactor trips, **THEN IMPLEMENT** EOP-0, Post-Trip Immediate Actions. c. **IF** in the process of draining the Reactor Coolant System **PER** OP-5, Plant Shutdown from Hot Standby to Cold Shutdown, **THEN VENT** the reactor vessel head by ONE of the following methods: **[B0076]** • **OPEN** RX VESS VENTs, 1-RC-103-SV and 1-RC-104-SV • **OPEN** manual Reactor Vessel Vent valves, 1-RC-274, 1-RC-275 and 1-RC-276 d. **IF** the RVLMS alarm is determined to be invalid, **THEN DETERMINE** RVLMS operability. Submit a CR **AND** Contact the System Manager.

ANNUNCIATOR COMPENSATORY ACTIONS

MONITOR the RVLMS mimic on PAMS at least hourly.

REFERENCES

None

DEVICE	SETPOINT	WINDOW	E-10
1C144A	Various	RVLMS CH A 1C144A	

POSSIBLE CAUSES

- Uncovered RVLMS Probe(s)
- Cabinet trouble alarms
- Cabinet diagnostic/error condition
- Function Enable switch or Software Load Enable switch placed in the ACTIVE position
- Cabinet temperature alarm condition

AUTOMATIC ACTIONS

None

(continued)

(continued) **WINDOW** **E-10**

NOTE

- Spurious alarms may occur in Mode 5 as a result of low temperature and pressure conditions. Spurious alarms during low temperature and low pressure conditions do not necessarily render a channel inoperable.
- Check FPD default screens indication and the SYSTEM HEALTH screen to determine alarm condition.

CONDITION	RESPONSE
1. RVLMS Channel A trouble.	1. Perform the following: a. **DETERMINE** the cause of alarm condition from the ALARM LOG screen and the HEATED JUNCTION THERMOCOUPLE screen. b. **IF** unable to determine cause for RVLMS Channel A, **THEN CONTACT** the System Engineer for assistance in determining channel operability. c. **IF** Cabinet temperature alarm actuated **AND** is valid, **THEN OPEN** Cabinet doors **AND** Declare Equipment inoperable. d. **IF** spurious alarms occur, **THEN CONTACT** the System Manager for assistance in determining channel operability.

ANNUNCIATOR COMPENSATORY ACTIONS

MONITOR the RVLMS on PAMS at least every 6 hours **AND** Cabinet temperature at least hourly.

REFERENCES

None

DEVICE	SETPOINT	WINDOW	E-11
1C144B	Various	RVLMS CH B 1C144B	

POSSIBLE CAUSES

- Uncovered RVLMS Probe(s)
- Cabinet trouble alarms
- Cabinet diagnostic/error condition
- Function Enable switch or Software Load Enable switch placed in the ACTIVE position
- Cabinet temperature alarm condition

AUTOMATIC ACTIONS

None

(continued)

(continued) **WINDOW** **E-11**

NOTE

- Spurious alarms may occur in Mode 5 as a result of low temperature and pressure conditions. Spurious alarms during low temperature and low pressure conditions do not necessarily render a channel inoperable.
- Check FPD default screens indication and the SYSTEM HEALTH screen to determine alarm condition.

CONDITION	RESPONSE
1. RVLMS Channel B trouble.	1. Perform the following: a. **DETERMINE** the cause of alarm condition from the ALARM LOG screen and the HEATED JUNCTION THERMOCOUPLE screen. b. **IF** unable to determine cause for RVLMS Channel B, **THEN CONTACT** the System Engineer for assistance in determining channel operability. c. **IF** Cabinet temperature alarm actuated **AND** is valid, **THEN OPEN** Cabinet doors **AND** Declare Equipment inoperable. d. **IF** spurious alarms occur, **THEN CONTACT** the System Manager for assistance in determining channel operability.

ANNUNCIATOR COMPENSATORY ACTIONS

MONITOR the RVLMS on PAMS at least every 6 hours **AND** Cabinet temperature at least hourly.

REFERENCES

None

DEVICE	SETPOINT	WINDOW	E-12
None	None	SPARE	

POSSIBLE CAUSES

None

AUTOMATIC ACTIONS

None

CONDITION	RESPONSE
1. None.	1. None.

ANNUNCIATOR COMPENSATORY ACTIONS

None

REFERENCES

None

DEVICE	SETPOINT	WINDOW	E-13
Loose Parts Monitoring Panel, 1C30A	N/A	LOOSE PARTS MON SYS PANEL 1C30A	

POSSIBLE CAUSES

- Starting a reactor coolant pump
- Loose parts in the Reactor Coolant System
- CEA manipulations
- Dropped CEA
- Loose Parts Monitor Panel channel malfunction

AUTOMATIC ACTIONS

None

CONDITION	RESPONSE
1. Loose Parts Monitoring System alarm.	1. **DETERMINE** cause of alarm on Loose Parts Monitor Panel 1C30A **AND** **REFER** to OI-37, Loose Parts Monitoring System, for alarm response.

ANNUNCIATOR COMPENSATORY ACTIONS

MONITOR Loose Parts Monitoring Panel, 1C30A, at least hourly.

REFERENCES

None

DEVICE	SETPOINT	WINDOW	E-14
1C182A	670° F	CET CH A 1C182A	

POSSIBLE CAUSES

NOTE

- CET alarm is disabled when a SCM alarm is actuated.
- Check FPD default screens indication and the SYSTEM HEALTH screen to determine alarm condition.

- High RCS temperature
- Cabinet trouble alarms
- Cabinet diagnostic/error condition
- Function Enable switch or Software Load Enable switch placed in the ACTIVE position
- Cabinet temperature alarm condition

AUTOMATIC ACTIONS

Alarm condition will reset when CET lowers to less than 665° F

CONDITION	RESPONSE
1. RCS temperature high.	1. **DETERMINE** cause of alarm. a. **IF** temperature increase is valid, **THEN ENSURE** actions are initiated to restore core cooling per the appropriate procedure. b. **IF** Cabinet temperature alarm actuated **AND** is valid, **THEN OPEN** Cabinet doors **AND** Declare Equipment for 1C182A and 1C144A inoperable. c. **IF** unable to determine cause of alarm, **THEN CONTACT** the System Manager for assistance in determining channel operability.

(continued)

(continued) **WINDOW** **E-14**

ANNUNCIATOR COMPENSATORY ACTIONS

MONITOR RCS temperatures **AND** Cabinet temperature at least hourly.

REFERENCES

None

DEVICE	SETPOINT	WINDOW	E-15
1C182B	670° F	CET CH B 1C182B	

POSSIBLE CAUSES

NOTE

- CET alarm is disabled when a SCM alarm is actuated.
- Check FPD default screens indication and the SYSTEM HEALTH screen to determine alarm condition.

- High RCS temperature
- Cabinet trouble alarms
- Cabinet diagnostic/error condition
- Function Enable switch or Software Load Enable switch placed in the ACTIVE position
- Cabinet temperature alarm condition

AUTOMATIC ACTIONS

Alarm condition will reset when CET lowers to less than 665° F

CONDITION	RESPONSE
1. RCS temperature high.	1. **DETERMINE** cause of alarm. a. **IF** temperature increase is valid, **THEN ENSURE** actions are initiated to restore core cooling per the appropriate procedure. b. **IF** Cabinet temperature alarm actuated **AND** is valid, **THEN OPEN** Cabinet doors **AND** Declare Equipment for 1C182B and 1C144B inoperable. c. **IF** unable to determine cause of alarm, **THEN CONTACT** the System Manager for assistance in determining channel operability.

(continued)

(continued) **WINDOW** **E-15**

ANNUNCIATOR COMPENSATORY ACTIONS

MONITOR RCS temperatures **AND** Cabinet temperature at least hourly.

REFERENCES

None

DEVICE	SETPOINT	WINDOW	E-16
1C182A/B	Variable when shutdown 700° F in operating modes	REFUELING RCS TEMP HIGH	

POSSIBLE CAUSES

- Improper SDC temperature operation.
- Improper SDC flow operation.

AUTOMATIC ACTIONS

None

CONDITION	RESPONSE
1. Designated CETs reading higher than the setpoint.	1. **DETERMINE** cause of alarm. a. **IF** temperature increase is a planned evolution, **THEN ADJUST** setpoint when RCS temperature is at the desired temperature. b. **IF** temperature increase is **NOT** a planned evolution, **THEN IMPLEMENT** the appropriate procedure to restore RCS temperature.

ANNUNCIATOR COMPENSATORY ACTIONS

MONITOR Reactor Coolant System temperature at least hourly.

REFERENCES

None

DEVICE	SETPOINT	WINDOW	E-17
1-HS-1406 1-PY-103	369° F increasing	**1-RC-402-ERV MPT PROT DISABLE**	

POSSIBLE CAUSES

- Reactor Coolant System temperature is greater than 365° F and PORV 402 MPT PROTECTION handswitch, 1-HS-1406, in VARIABLE MPT ENABLE.
- Reactor Coolant System temperature is greater than 365° F and PORV 402 MPT PROTECTION handswitch, 1-HS-1406, in SINGLE MPT ENABLE.

AUTOMATIC ACTIONS

- While in SINGLE MPT ENABLE, 1-RC-402-ERV will open when RCS pressure exceeds 410 PSIA.
- While in VARIABLE MPT ENABLE, 1-RC-402-ERV will open when RCS pressure exceeds the programmed variable PORV lift setpoint.

CONDITION	RESPONSE
1. Reactor Coolant System temperature is greater than 365° F **AND** PORV 402 MPT PROTECTION handswitch, 1-HS-1406, in MPT ENABLE.	1. Perform the following: a. **PLACE** PORV 402 MPT PROTECTION handswitch, 1-HS-1406, in NORMAL. b. **ENSURE** PORV 402 OVERRIDE handswitch, 1-HS-1402, in AUTO. **[B0053]**

ANNUNCIATOR COMPENSATORY ACTIONS

None

REFERENCES

1E-75 (61-075-C), Sh.53

DEVICE	SETPOINT	WINDOW	E-18
1-HS-1406 1-RC-403-MOV 1-PY-103	369° F decreasing	1-RC-402-ERV MPT PROT ENABLE	

POSSIBLE CAUSES

- Reactor Coolant System temperature is less than 365° F and PORV 402 MPT PROTECTION handswitch, 1-HS-1406, in NORMAL (365° F is the Tech Spec value)
- Reactor Coolant System temperature is less than 365° F and PORV 402 BLOCK, 1-RC-403-MOV, **NOT** full open (365° F is the Tech Spec value).

AUTOMATIC ACTIONS

- While in SINGLE MPT ENABLE, 1-RC-402-ERV will open when RCS pressure exceeds 410 PSIA.
- While in VARIABLE MPT ENABLE, 1-RC-402-ERV will open when RCS pressure exceeds the programmed variable PORV lift setpoint.

(continued)

(continued) **WINDOW** **E-18**

CONDITION	RESPONSE
1. Handswitch 1-HS-1406 in NORMAL or PORV 402 BLOCK, 1-RC-403-MOV, **NOT** full open.	1. Perform the following: a. **IF** the RCS is **NOT** on SDC, **THEN VERIFY** RCS pressure as read on PI-103 is at least 50 PSI less than the programmed variable PORV lift setpoint as read on ZI-103. b. **IF** the RCS IS on SDC, **THEN VERIFY** RCS pressure is less than 250 PSIA. c. **IF** required, **THEN OPEN** PORV 402 BLOCK, 1-RC-403-MOV. **[B0053]** d. **IF** the RCS is **NOT** on SDC, **THEN PLACE** PORV 402 MPT PROTECTION handswitch, 1-HS-1406, in the VARIABLE MPT ENABLE position. e. **IF** the RCS IS on SDC, **THEN PLACE** PORV 402 MPT PROTECTION handswitch, 1-HS-1406, in the SINGLE MPT ENABLE position.

ANNUNCIATOR COMPENSATORY ACTIONS

None

REFERENCES

1E-75 (61-075-C), Sh.53

DEVICE	SETPOINT	WINDOW	E-19
None	None	SPARE	

POSSIBLE CAUSES

None

AUTOMATIC ACTIONS

None

CONDITION	RESPONSE
1. None.	1. None.

ANNUNCIATOR COMPENSATORY ACTIONS

None

REFERENCES

None

DEVICE	SETPOINT	WINDOW	E-20
1-PY-103 1-HS-1406	• SINGLE MPT ENABLE Mode - 386 PSIA • VARIABLE MPT ENABLE Mode Nominally 10 PSIA below the Max Operating Pressure Curve	**1-RC-402-ERV LTOP PRESS HI**	

POSSIBLE CAUSES

- Improper pressurizer heater operation.
- Improper charging and letdown operation.
- Improper HPSI pump operation.
- Inadvertent RCP start.
- 1-PY-103 power failure.
- 1-PT-103 failure

AUTOMATIC ACTIONS

None

CONDITION	RESPONSE
1. RCS pressure high.	1. Perform the following: a. **DEENERGIZE** all Pressurizer heaters. b. **STOP** all running RCPs. c. **IF** in a LOCA condition, **THEN THROTTLE** HPSI flow **PER** AOP-2A, Excessive Reactor Coolant Leakage. d. **IF NOT** in a LOCA condition, **THEN**: (1) **SECURE** all HPSI pump(s). (2) **SECURE** Charging.

ANNUNCIATOR COMPENSATORY ACTIONS

1. **MONITOR** Reactor Coolant System temperature and pressure at least hourly.

REFERENCES

61-075-C Sh 53

DEVICE	SETPOINT	WINDOW	E-21
1ERV402X (NC contact) 1ERV404X (NC contact)	N/A	PORV ENERGIZED	

POSSIBLE CAUSES

- Two out of four Pressurizer pressure trips on the Reactor Protection System
- Reactor Coolant System pressure greater than 410 PSIA when in the SINGLE MPT ENABLE mode.
- Reactor Coolant System pressure greater than the programmed variable PORV lift setpoint as read on ZI-103 or ZI-103-1 when in the VARIABLE MPT ENABLE mode.
- Reactor Coolant System pressure transmitter(s), 1-PT-103 or 1-PT-103-1, failure

AUTOMATIC ACTIONS

None

(continued)

(continued) **WINDOW** **E-21**

CONDITION	RESPONSE
1. The PORVs are energized.	1. **PERFORM** the following: a. **IF** reactor trip occurs, **THEN IMPLEMENT** EOP-0, Post-Trip Immediate Actions. b. **NOTIFY** the electric shop to verify the trip status of the PORV thermal overloads to ensure PORV operability. **[B0034]** c. **IF** the PORVs are in NORMAL, **THEN**: (1) **CHECK** the PORVs shut after the high pressure condition clears. (2) **IF** a PORV fails to shut or is open due to a failed transmitter, **THEN PLACE** the applicable PORV Override handswitch, 1-HS-1402 or 1-HS-1404, in OVERRIDE TO CLOSE, **OR SHUT** PORV Block, 1-RC-403-MOV or 1-RC-405-MOV, as necessary.
(continued)	(continued)

(continued)

(continued) **WINDOW** **E-21**

CONDITION	RESPONSE
1. (continued)	1. (continued) d. **IF** the PORVs are in MPT ENABLE, **THEN**: (1) **TRIP** any RCPs operating in the NON-OPERATING AREA of the RCP curve. (2) **WHEN** the cause of the high pressure condition has been corrected, **THEN**: **[B0064]** (a) **PLACE** PORV Override handswitches, 1-HS-1402 and 1-HS-1404, in OVERRIDE TO CLOSE (b) **WHEN** the PORVs are shut, **THEN PLACE** PORV Override handswitches, 1-HS-1402 and 1-HS-1404, in AUTO. (3) **IF** a PORV fails to shut or is open due to a failed transmitter, **THEN SHUT** the applicable PORV Block, 1-RC-403-MOV or 1-RC-405-MOV.
(continued)	(continued)

(continued)

(continued) **WINDOW** **E-21**

CONDITION	RESPONSE
1. (continued)	1.d. (continued) (4) **DRAIN** the PORV discharge piping to the Quench Tank as follows: • **IF** the Pressurizer temperature is greater than or equal to 210° F, **THEN DRAIN** the Quench Tank **PER** Bleed and Feed Operation To Cool the Quench Tank section of OI-1B, Quench Tank Operations • **IF** the Pressurizer temperature is less than 210° F, **THEN DRAIN** the Quench Tank to less than 21 inches **PER** Draining the Quench Tank section of OI-1B, Quench Tank Operations e. **MONITOR** computer points T106, T107 and T108 for leak-off temperatures. f. **IF** a reactor trip is **NOT** imminent, **THEN IMPLEMENT** AOP-2A, Excessive Reactor Coolant Leakage. g. **REFER** to Technical Specifications 3.4.11 and 3.4.12 for PORV operability and reportability requirements.

ANNUNCIATOR COMPENSATORY ACTIONS

None

REFERENCES

1E-75 (61-075-C), Sh.53

DEVICE	SETPOINT	WINDOW	E-22
1-VE-200 1-VE-201 1-VE-402 1-VE-404	0.25 RMS Volts/Valve	PORV/SAFETY VLV ACOUSTIC MON	

POSSIBLE CAUSES

- Pressurizer safety valve(s), 1-RC-200-RV or 1-RC-201-RV, leaking or open
- PORV(s), 1-RC-402-ERV or 1-RC-404-ERV, leaking or open

AUTOMATIC ACTIONS

None

CONDITION	RESPONSE
1. PORV or Pressurizer safety valve leaking by or open.	1. Perform the following: a. **IF** reactor trip occurs, **THEN IMPLEMENT** EOP-0, Post-Trip Immediate Actions. b. **CHECK** Pressurizer RV Flow Monitor to determine which train of valves is indicating leakage or flow. c. **IF** the PORVs are in NORMAL, **THEN**: (1) **WHEN** the high pressure condition clears, **THEN ENSURE** the PORVs are shut. (2) **IF** a PORV fails to shut, **THEN PLACE** the applicable PORV Override handswitch, 1-HS-1402 or 1-HS-1404, in OVERRIDE TO CLOSE, **OR SHUT** PORV Block, 1-RC-403-MOV or 1-RC-405-MOV, as necessary.
(continued)	(continued)

(continued)

(continued) **WINDOW** **E-22**

CONDITION	RESPONSE
1. (continued)	1. (continued) d. **IF** the PORVs are in MPT ENABLE, **THEN**: (1) **TRIP** any RCPs operating in the NON-OPERATING AREA of the RCP curve. (2) **WHEN** the cause of the high pressure condition has been corrected, **THEN**: **[B0053]** (a) **PLACE** PORV Override handswitches, 1-HS-1402 and 1-HS-1404, in OVERRIDE TO CLOSE. (b) **WHEN** the PORVs are shut, **THEN PLACE** PORV Override handswitches, 1-HS-1402 and 1-HS-1404, in AUTO. (3) **IF** a PORV fails to shut or is open due to a failed transmitter, **THEN SHUT** the applicable PORV Block, 1-RC-403-MOV or 1-RC-405-MOV.
(continued)	(continued)

(continued)

(continued) **WINDOW** **E-22**

CONDITION	RESPONSE
1. (continued)	1.d. (continued) (4) **DRAIN** the PORV discharge piping to the Quench Tank as follows: • **IF** the Pressurizer temperature is greater than or equal to 210° F, **THEN DRAIN** the Quench Tank **PER** Bleed and Feed Operation To Cool the Quench Tank section of OI-1B, Quench Tank Operations • **IF** the Pressurizer temperature is less than 210° F, **THEN DRAIN** the Quench Tank to less than 21 inches **PER** Draining the Quench Tank section of OI-1B, Quench Tank Operations e. **MONITOR** computer points T106, T107 and T108 for leak-off temperatures. f. **IF** a reactor trip is **NOT** imminent, **THEN IMPLEMENT** AOP-2A, Excessive Reactor Coolant Leakage. g. **REFER** to Technical Specifications 3.4.11 and 3.4.12 for PORV operability requirements.

ANNUNCIATOR COMPENSATORY ACTIONS

MONITOR the Pressurizer RV Flow Monitor on 1C31 at least hourly.

REFERENCES

None

DEVICE	SETPOINT	WINDOW	E-23
1-HS-1402 1-HS-1404	N/A	**PORV OVERRIDE HS NOT IN AUTO**	

POSSIBLE CAUSES

- 1-HS-1402, not in AUTO.
- 1-HS-1404, not in AUTO.

AUTOMATIC ACTIONS

None.

CONDITION	RESPONSE
1. Either PORV Override HS, not in AUTO.	1. **DETERMINE** the appropriate position.

ANNUNCIATOR COMPENSATORY ACTIONS

CHECK both HS in AUTO at least every 6 hours during normal operations.

REFERENCES

61075SH0053

61087SH0005

DEVICE	SETPOINT	WINDOW	E-24
None	None	SPARE	

POSSIBLE CAUSES

None

AUTOMATIC ACTIONS

None

CONDITION	RESPONSE
1. None.	1. None.

ANNUNCIATOR COMPENSATORY ACTIONS

None

REFERENCES

None

DEVICE	SETPOINT	WINDOW	E-25
1-HS-1408 1-PY-103-1	369° F increasing	**1-RC-404-ERV MPT PROT DISABLE**	

POSSIBLE CAUSES

- RCS temperature is greater than 365° F and PORV 404 MPT PROTECTION handswitch, 1-HS-1408, in the VARIABLE MPT ENABLE position.
- RCS temperature is greater than 365° F and PORV 404 MPT PROTECTION handswitch, 1-HS-1408, in the SINGLE MPT ENABLE position.

AUTOMATIC ACTIONS

- While in SINGLE MPT ENABLE, 1-RC-404-ERV will open when RCS pressure exceeds 410 PSIA.
- While in VARIABLE MPT ENABLE, 1-RC-404-ERV will open when RCS pressure exceeds the programmed variable PORV lift setpoint.

CONDITION	RESPONSE
1. Handswitch 1-HS-1408 in MPT ENABLE.	1. Perform the following: a. **PLACE** PORV 404 MPT PROTECTION handswitch, 1-HS-1408, in the NORMAL position. b. **VERIFY** PORV 404 OVERRIDE handswitch, 1-HS-1404, is in the AUTO position.

ANNUNCIATOR COMPENSATORY ACTIONS

None

REFERENCES

1E-75 (61-075-C), Sh.53B

DEVICE	SETPOINT	WINDOW	E-26
1-HS-1408 1-RC-405-MOV 1-PY-103-1	369° F decreasing	1-RC-404-ERV MPT PROT ENABLE	

POSSIBLE CAUSES

- Reactor Coolant System temperature is less than 365° F and PORV 404 MPT PROTECTION handswitch, 1-HS-1408, in the NORMAL position. (365° F is the Tech Spec value)
- Reactor Coolant System temperature is less than 365° F and PORV 404 BLOCK, 1-RC-405-MOV, **NOT** full open (365° F is the Tech Spec value)

AUTOMATIC ACTIONS

- While in SINGLE MPT ENABLE, 1-RC-404-ERV will open when RCS pressure exceeds 410 PSIA.
- While in VARIABLE MPT ENABLE, 1-RC-404-ERV will open when RCS pressure exceeds the programmed variable PORV lift setpoint.

(continued)

(continued) **WINDOW** **E-26**

CONDITION	RESPONSE
1. Handswitch 1-HS-1408 in NORMAL or PORV 404 BLOCK, 1-RC-405-MOV, **NOT** full open.	1. Perform the following: a. **IF** the RCS is **NOT** on SDC, **THEN VERIFY** RCS pressure as read on PI-103-1 is at least 50 PSI less than the programmed variable PORV lift setpoint as read on ZI-103-1. b. **IF** the RCS IS on SDC, **THEN VERIFY** RCS pressure is less than 250 PSIA. c. **IF** required, **THEN OPEN** PORV 404 BLOCK, 1-RC-405-MOV. **[B0053]** d. **IF** the RCS is **NOT** on SDC, **THEN PLACE** PORV 404 MPT PROTECTION handswitch, 1-HS-1408, in the VARIABLE MPT ENABLE position. e. **IF** the RCS IS on SDC, **THEN PLACE** PORV 404 MPT PROTECTION handswitch, 1-HS-1408, in the SINGLE MPT ENABLE position.

ANNUNCIATOR COMPENSATORY ACTIONS

None

REFERENCES

1E-75 (61-075-C), Sh.53B

DEVICE	SETPOINT	WINDOW	E-27
None	None	SPARE	

POSSIBLE CAUSES

None

AUTOMATIC ACTIONS

None

CONDITION	RESPONSE
1. None.	1. None.

ANNUNCIATOR COMPENSATORY ACTIONS

None

REFERENCES

None

DEVICE	SETPOINT	WINDOW	E-28
1-PY-103-1 1-HS-1408	• SINGLE MPT ENABLE Mode 386 PSIA • VARIABLE MPT ENABLE Mode Nominally 10 PSIA below the Max Operating Pressure Curve	**1-RC-404-ERV LTOP PRESS HI**	

POSSIBLE CAUSES

- Improper pressurizer heater operation.
- Improper charging and letdown operation.
- Improper HPSI pump operation.
- Inadvertent RCP start.
- 1-PY-103-1 power failure.
- 1-PT-103-1 failure

AUTOMATIC ACTIONS

None

CONDITION	RESPONSE
1. RCS pressure high.	1. Perform the following: a. **DEENERGIZE** all Pressurizer heaters. b. **STOP** all running RCPs. c. **IF** in a LOCA condition, **THEN THROTTLE** HPSI flow **PER** AOP-2A, Excessive Reactor Coolant Leakage. d. **IF NOT** in a LOCA condition, **THEN**: (1) **SECURE** all HPSI pump(s). (2) **SECURE** Charging.

ANNUNCIATOR COMPENSATORY ACTIONS

1. **MONITOR** Reactor Coolant System temperature and pressure at least hourly.

REFERENCES

61-075-C Sh 53B

DEVICE	SETPOINT	WINDOW	E-29
1-PA-100X 1-PA-100Y	2350 (2325 to 2375) PSIA(High) 2100 (2075 to 2125) PSIA(Low)	PZR CH 100 PRESS	

POSSIBLE CAUSES

- High pressure:
  - Improper operation of Pressure Controller, 1-PIC-100X or 1-PIC-100Y
  - Loss of load
  - Failure of Level Controller, 1-LIC-110X or 1-LIC-110Y
- Low pressure:
  - Improper operation of Pressure Controller, 1-PIC-100X or 1-PIC-100Y
  - Reactor Coolant System leak
  - Pressurizer heater(s) malfunction
  - Plant cooldown
  - Steam line rupture
  - A failed OPEN Spray CV, 1-RC-100E or 1-RC-100F

AUTOMATIC ACTIONS

- PORVs open on high Pressurizer pressure of 2400 PSIA
- Reactor trip on high Pressurizer pressure of 2385 PSIA
- Reactor trip on low Pressurizer pressure of ≤1875 PSIA
- ESFAS actuation on low Pressurizer pressure of 1740 PSIA

(continued)

(continued) **WINDOW** **E-29**

CONDITION	RESPONSE
1. Pressurizer high pressure.	1. Perform the following: a. **CHECK** Pressurizer spray valves open. b. **CHECK** Pressurizer heaters deenergized. c. **IF** a level controller failure is indicated, **THEN SHIFT** Pressurizer level control channels as follows: (1) **SHIFT** Pressurizer level control channels. (2) **SHIFT** PZR HTR LO LVL CUT-OFF SEL switch, 1-HS-100-3, to the operating controller. d. **IF** required, **THEN PERFORM** any of the following: • **DEENERGIZE** Pressurizer heaters • **SHIFT** Pressurizer pressure control channels • **OPEN** Pressurizer spray valves using 1-HIC-100 in manual • **PLACE** CEDS in Manual Sequential **AND REDUCE** Tavg
(continued)	(continued)

(continued)

(continued) **WINDOW** **E-29**

CONDITION	RESPONSE
2. Pressurizer low pressure.	2. Perform the following: a. **CHECK** Pressurizer spray valves shut. b. **CHECK** Pressurizer heaters energized. c. **IF** required, **THEN PERFORM** any of the following: • **ENERGIZE** Pressurizer heaters • **SHIFT** Pressurizer pressure control channels • **SHUT** Pressurizer spray valves using 1-HIC-100 in manual • **IF** one Pressurizer spray valve has failed OPEN, **THEN** attempt to **SHUT** Pressurizer spray valve by swapping 1-HS-100-8 to the opposite Pressurizer spray valve. • **IF** Pressurizer spray valves can **NOT** be shut, **THEN PERFORM** the following: (1) **TRIP** the reactor. (2) **IMPLEMENT** Reactivity Control section of EOP-0, Post-Trip Immediate Actions. (3) **STOP** the RCP(s) associated with the open Pressurizer spray valve(s): • 11A for 1-RC-100E-CV • 11B for 1-RC-100F-CV (4) **COMPLETE** EOP-0, Post-Trip Immediate Actions.
(continued)	(continued)

(continued)

(continued) **WINDOW** **E-29**

CONDITION	RESPONSE
2. (continued)	2.c. (continued) • **CHECK** for indications of Reactor Coolant System leakage.

ANNUNCIATOR COMPENSATORY ACTIONS

MONITOR Pressurizer pressure at least hourly.

REFERENCES

None

DEVICE	SETPOINT	WINDOW	E-30
1C144A	15° F / 80 PSI (CET subcooling) 35° F / 80 PSI (Loop subcooling) 35° F / 80 PSI (Upper Head subcooling)	SUBCOOLING A MARGIN TO SATURATION LO	

POSSIBLE CAUSES

- Loss of natural circulation
- Loss of Reactor Coolant System inventory
- Steam generator tube rupture
- Reactor Coolant System depressurization

AUTOMATIC ACTIONS

Alarm condition will reset when CET subcooled margin rises to greater than 20° F / 90 PSI.

Alarm condition will reset when Loop subcooled margin rises to greater than 40° F / 90 PSI.

Alarm condition will reset when Upper Head subcooled margin rises to greater than 40° F / 90 PSI.

(continued)

(continued) **WINDOW** **E-30**

NOTE

- This is a Technical Specification 3.3.10 related instrument.
- Alarm is expected when in lower mode operation with planned lower pressure conditions.
- Alarm has reflash capability.

CONDITION	RESPONSE
1. Saturation margin low.	1. Perform the following: a. **IF** reactor trips, **THEN IMPLEMENT** EOP-0, Post-Trip Immediate Actions. b. **DETERMINE** low saturation alarm validity by checking Subcooled Margin indications on FPD. c. **IF** reactor has **NOT** tripped, **THEN RESTORE** Reactor Coolant System pressure and temperature to normal. d. SUBMIT a CR if alarm is **NOT** valid.

ANNUNCIATOR COMPENSATORY ACTIONS

MONITOR Subcooled Margin at least hourly.

REFERENCES

None

DEVICE	SETPOINT	WINDOW	E-31
1C144B	15° F / 80 PSI (CET subcooling) 35° F / 80 PSI (Loop subcooling) 35° F / 80 PSI (Upper Head subcooling)	SUBCOOLING B MARGIN TO SATURATION LO	

POSSIBLE CAUSES

- Loss of natural circulation
- Loss of Reactor Coolant System inventory
- Steam generator tube rupture
- Reactor Coolant System depressurization

AUTOMATIC ACTIONS

Alarm condition will reset when CET subcooled margin rises to greater than 20° F / 90 PSI.

Alarm condition will reset when Loop subcooled margin rises to greater than 40° F / 90 PSI.

Alarm condition will reset when Upper Head subcooled margin rises to greater than 40° F / 90 PSI.

(continued)

(continued) **WINDOW** **E-31**

NOTE

- This is a Technical Specification 3.3.10 related instrument.
- Alarm is expected when in lower mode operation with planned lower pressure conditions.
- Alarm has reflash capability.

CONDITION	RESPONSE
1. Saturation margin low.	1. Perform the following: a. **IF** reactor trips, **THEN IMPLEMENT** EOP-0, Post-Trip Immediate Actions. b. **DETERMINE** low saturation alarm validity by checking Subcooled Margin indications on FPD. c. **IF** reactor has **NOT** tripped, **THEN RESTORE** Reactor Coolant System pressure and temperature to normal. d. SUBMIT an Issue Report if alarm is **NOT** valid.

ANNUNCIATOR COMPENSATORY ACTIONS

MONITOR Subcooled Margin at least hourly.

REFERENCES

None

DEVICE	SETPOINT	WINDOW	E-32
1-TIA-105	580° F (570 to 590° F)	SURGE LINE TEMP LO	

POSSIBLE CAUSES

- Loss of minimum Pressurizer spray flow
- Plant cooldown
- Pressurizer in surge due to power increase

AUTOMATIC ACTIONS

None

CONDITION	RESPONSE
1. Pressurizer surge line low temperature.	1. Perform the following: a. **IF** condition is due to loss of minimum Pressurizer spray flow, **THEN CONSIDER**: • Raising spray flow • Adjusting Pressurizer spray bypass valves **PER** OI-1H, Pressurizer Pressure Control b. **IF** condition is due to plant cooldown or Pressurizer in surge, **THEN** no corrective action is required.

ANNUNCIATOR COMPENSATORY ACTIONS

MONITOR Pressurizer surge line temperature at least hourly.

REFERENCES

None

DEVICE	SETPOINT	WINDOW	E-33
1-LA-110XH	+39 in. above program level (+34 to +44 in.)	PZR CH X LVL	
1-LA-110XL	-15 in. below program level (-10 to -20 in.)		

POSSIBLE CAUSES

- Improper operation of Level Controller, 1-LIC-110X or 1-LIC-110Y
- Level Controller, 1-LIC-110X or 1-LIC-110Y, failure
- Reactor Coolant System leakage
- Steam demand and reactor power mismatch
- CVCS malfunction

AUTOMATIC ACTIONS

Low Pressurizer level (-15 in.) sends a backup signal to start all charging pumps.

(continued)

(continued) **WINDOW** **E-33**

CONDITION	RESPONSE
1. Pressurizer high level.	1. Perform the following: a. **ENSURE** backup charging pump(s) stopped. b. **ENSURE** Letdown flow at maximum. c. **IF** a level controller failure is indicated, **THEN SHIFT** Pressurizer level control channels as follows: (1) **SHIFT** PZR LVL CH SEL switch, 1-HS-110, to the operating controller. (2) **SHIFT** PZR HTR LO LVL CUT-OFF SEL switch, 1-HS-100-3, to the operating controller.
(continued)	(continued)

(continued)

(continued) **WINDOW** **E-33**

CONDITION	RESPONSE
2. Pressurizer low level.	2. Perform the following: a. **IF** reactor trips, **THEN IMPLEMENT** EOP-0, Post-Trip Immediate Actions. b. **ENSURE** all available charging pumps running. c. **ENSURE** Letdown flow at minimum. d. **IF** reactor has **NOT** tripped, **THEN REFER** to AOP-2A, Excessive Reactor Coolant Leakage. e. **IF** a level controller failure is indicated, **THEN SHIFT** Pressurizer level control channels as follows: (1) **SHIFT** PZR LVL CH SEL switch, 1-HS-110, to the operating controller. (2) **SHIFT** PZR HTR LO LVL CUT-OFF SEL switch, 1-HS-100-3, to the operating controller.

ANNUNCIATOR COMPENSATORY ACTIONS

- **MONITOR** Pressurizer level at least hourly.
- **IF** the 1C06 alarm window E-34 is also out of service, **THEN STATION** a dedicated Pressurizer level watch, **OR VERIFY** that no more than two charging pumps are available for operation.

REFERENCES

1E-75 (61-075-B), Sh.36

DEVICE	SETPOINT	WINDOW	E-34
1-LA-110YH	+39 in. above program level (+34 to +44 in.)	PZR CH Y LVL	
1-LA-110YL	-15 in. below program level (-10 to -20 in.)		

POSSIBLE CAUSES

- Improper operation of Level Controller, 1-LIC-110X or 1-LIC-110Y
- Level Controller, 1-LIC-110X or 1-LIC-110Y, failure
- Reactor Coolant System leakage
- Steam demand and reactor power mismatch
- CVCS malfunction

AUTOMATIC ACTIONS

Low Pressurizer level (-15 in.) sends a backup signal to start all charging pumps.

(continued)

(continued) **WINDOW** **E-34**

CONDITION	RESPONSE
1. Pressurizer high level.	1. Perform the following: a. **ENSURE** backup charging pump(s) stopped. b. **ENSURE** Letdown flow at maximum. c. **IF** a level controller failure is indicated, **THEN SHIFT** Pressurizer level control channels as follows: (1) **SHIFT** PZR LVL CH SEL switch, 1-HS-110, to the operating controller. (2) **SHIFT** PZR HTR LO LVL CUT-OFF SEL switch, 1-HS-100-3, to the operating controller.
(continued)	(continued)

(continued)

(continued) **WINDOW** **E-34**

CONDITION	RESPONSE
2. Pressurizer low level.	2. Perform the following: a. **IF** reactor trips, **THEN IMPLEMENT** EOP-0, Post-Trip Immediate Actions. b. **ENSURE** all available charging pumps running. c. **ENSURE** Letdown flow at minimum. d. **IF** reactor has **NOT** tripped, **THEN REFER** to AOP-2A, Excessive Reactor Coolant Leakage. e. **IF** a level controller failure is indicated, **THEN SHIFT** Pressurizer level control channels as follows: (1) **SHIFT** PZR LVL CH SEL switch, 1-HS-110, to the operating controller. (2) **SHIFT** PZR HTR LO LVL CUT-OFF SEL switch, 1-HS-100-3, to the operating controller.

ANNUNCIATOR COMPENSATORY ACTIONS

- **MONITOR** Pressurizer level at least hourly.
- **IF** the 1C06 alarm window E-33 is also out of service,
  THEN STATION a dedicated Pressurizer level watch,
  OR VERIFY that no more than two charging pumps are available for operation.

REFERENCES

1E-75 (61-075-B), Sh.36

DEVICE	SETPOINT	WINDOW	E-35
1-LC-110XL 1-LC-110YL	101 in. (96 to 106 in.)	PZR HTR CUTOFF	

POSSIBLE CAUSES

- Pressurizer level low
- Level Controller, 1-LIC-110X or 1-LIC-110Y, failure

AUTOMATIC ACTIONS

Deenergizes all Pressurizer heaters.

CONDITION	RESPONSE
1. Pressurizer low level.	1. Perform the following: a. **IF** reactor trips, **THEN IMPLEMENT** EOP-0, Post-Trip Immediate Actions. b. **ENSURE** all available charging pumps running. c. **ENSURE** Letdown flow at minimum. d. **IF** reactor has **NOT** tripped, **THEN REFER** to AOP-2A, Excessive Reactor Coolant Leakage. e. **IF** a level controller failure is indicated, **THEN SHIFT** Pressurizer level control channels as follows: (1) **SHIFT** PZR LVL CH SEL switch, 1-HS-110, to the operating controller. (2) **SHIFT** PZR HTR LO LVL CUT-OFF SEL switch, 1-HS-100-3, to the operating controller.
(continued)	(continued)

(continued)

(continued) **WINDOW** **E-35**

CONDITION	RESPONSE
1. (continued)	1. (continued) f. **IF** conditions warrant, **THEN RESET** proportional heaters by placing 11 PROP HTRS, 1-HS-100-1 **AND** 12 PROP HTRS, 1-HS-100-2 to OFF, **AND** **THEN** back to AUTO, as needed.

ANNUNCIATOR COMPENSATORY ACTIONS

MONITOR Pressurizer level and heaters at least hourly.

REFERENCES

1E-75 (61-075-C), Sh.24

DEVICE	SETPOINT	WINDOW	E-36
1-TIA-103 1-TIA-104	500° F (490 to 510° F)	SPRAY LINE TEMP LO	

POSSIBLE CAUSES

- Loss of minimum Pressurizer spray flow
- Plant cooldown
- Reactor Coolant Pumps 11A and 11B secured

AUTOMATIC ACTIONS

None

CONDITION	RESPONSE
1. Pressurizer spray line low temperature.	1. **PERFORM** the following: a. **IF** condition is due to loss of minimum Pressurizer spray flow, **THEN**: (1) **INITIATE** sufficient Pressurizer spray flow to maintain spray line temperature greater than 500° F. (2) **ADJUST** Pressurizer spray bypass valves **PER** OI-1H, Pressurizer Pressure Control. (3) **IF** condition is due to plant cooldown, **THEN** no corrective action is required.

ANNUNCIATOR COMPENSATORY ACTIONS

MONITOR Pressurizer spray line temperatures at least hourly.

REFERENCES

None

DEVICE	SETPOINT	WINDOW	E-37
None	None	SPARE	

POSSIBLE CAUSES

None

AUTOMATIC ACTIONS

None

CONDITION	RESPONSE
1. None.	1. None.

ANNUNCIATOR COMPENSATORY ACTIONS

None

REFERENCES

None

DEVICE	SETPOINT	WINDOW	E-38
Plant Computer	250 PSIA	SDC PRESS HI	

POSSIBLE CAUSES

- Improper Pressurizer heater operation
- Improper Charging and Letdown System operation
- Improper HPSI pump operation
- Plant Computer failure
- Inadvertent RCP start

AUTOMATIC ACTIONS

None

(continued)

(continued) **WINDOW** **E-38**

CONDITION	RESPONSE
1. RCS pressure high.	1. **PERFORM** the following: a. IF RCS pressure is being raised **PER** OP-1, Plant Startup from Cold Shutdown, **THEN MODIFY** computer points, P-103 and P-103A, to de-activate the alarm function **PER** OI-50A, section titled, POINT PROCESSING. b. IF an inadvertent RCS pressure raise is taking place, **THEN**: (1) **IMMEDIATELY** take action to lower RCS pressure less than 250 PSIA. (2) IF RCS pressure continues to rise, **THEN**: (a) **STOP** the running LPSI Pump(s). (b) **SHUT** the SDC Return MOVs, 1-SI-651-MOV and 1-SI-652-MOV. (c) **IMPLEMENT** AOP-3B, ABNORMAL SHUTDOWN COOLING CONDITIONS.

ANNUNCIATOR COMPENSATORY ACTIONS

MONITOR Reactor Coolant System temperature and pressure at least hourly.

REFERENCES

None

DEVICE	SETPOINT	WINDOW	E-39
1-HS-100-4A 1-HS-100-6A	N/A	PZR B/U HTR BANK 1,3 LOCAL CONTR 1C43	

POSSIBLE CAUSES

Backup Heater Transfer Control keyswitch(es) on 1C43, out of REMOTE.

AUTOMATIC ACTIONS

Pressurizer heater low level cutoff protection no longer provided.

CONDITION	RESPONSE
1. Pressurizer backup heater keyswitch(es) out of REMOTE.	1. **ENSURE** Pressurizer level is maintained above the low level cutoff setpoint while heaters are energized to prevent heater damage.

ANNUNCIATOR COMPENSATORY ACTIONS

CHECK Pressurizer backup heater keyswitches at 1C43 in REMOTE at least once per shift while **NOT** in local use.

REFERENCES

1E-75 (61-075-C), Sh.24; 1-LD-75 (60-616-B), Sh.24

DEVICE	SETPOINT	WINDOW	E-40
None	None	SPARE	

POSSIBLE CAUSES

None

AUTOMATIC ACTIONS

None

CONDITION	RESPONSE
1. None.	1. None.

ANNUNCIATOR COMPENSATORY ACTIONS

None

REFERENCES

None

DEVICE	SETPOINT	WINDOW	E-41
1C152: 2R12-5; 2R12-6	N/A	PLANT COMPUTER	

POSSIBLE CAUSES

- Loss of power
- Hardware failure
- Plant Computer stopped processing

AUTOMATIC ACTIONS

- SPDS is out of service
- LTOP monitoring by the plant computer is out of service

CONDITION	RESPONSE
1. Plant Computer failure.	1. **PERFORM** the following: a. **IF** the plant computer is OOS, **THEN STATION** a dedicated Pressurizer level watch, **OR VERIFY** that no more than two charging pumps are available for operation. b. Bootstrap the computer **PER** OI-50A, Plant Computer. c. **IF** in Mode 1 or 2 and bootstrapping is **NOT** successful, **THEN IMPLEMENT** AOP-7H, Loss of Plant Computer In Mode One or Two. d. **IF** in mode 3 or below and bootstrapping is not successful, **THEN LOG** plant transient data **PER** EN-1-115, RECORDING OF PLANT TRANSIENT/OPERATIONAL CYCLES.

(continued)

(continued) **WINDOW** **E-41**

ANNUNCIATOR COMPENSATORY ACTIONS

MONITOR the Plant Computer to ensure continued processing.

REFERENCES

None

DEVICE	SETPOINT	WINDOW	E-42
Computers: U-1 1-TS-5501 1-TS-5502 1-TS-5503 1-TS-5504 1-TS-5505 1-TS-5508 U-2 2-TS-5501 2-TS-5502 2-TS-5503 2-TS-5504 2-TS-5505 2-TS-5508 SPARE 1-TS-5506 1-TS-5507	90° F (nominal)	PLANT COMPUTER STATUS PANEL	

POSSIBLE CAUSES

- Computer room air conditioner malfunction
- Computer component overheating
- Computer component power failure

AUTOMATIC ACTIONS

None

(continued)

(continued) **WINDOW** **E-42**

CONDITION	RESPONSE
1. Computer overheating.	1. Perform the following: a. **DETERMINE** which cabinet is alarming from 72 ft computer room alarm panel 1K04 and **ACKNOWLEDGE** the alarm by depressing the ACK and RESET pushbuttons. b. **IF** the computer room air conditioner malfunction is suspected, **THEN CONTACT** the Unit 2 Machine Shop. c. **IF** power is lost, **THEN CHECK** the following and **ATTEMPT** to restore power: • Computer inverter(s) inservice or alternate source suppling load • Computer panel(s) 1P58, 2P58 or 2P61 breaker(s) d. **IF** the alarm can **NOT** be cleared, **THEN CONTACT** the Computer Maintenance group. e. **IF** in Mode 1 or 2, **THEN IMPLEMENT** AOP-7H, Loss of Plant Computer In Mode One or Two.

ANNUNCIATOR COMPENSATORY ACTIONS

None

REFERENCES

1E-87 (61-087-D), Sh.39; (61-087-B), Sh.39A

DEVICE	SETPOINT	WINDOW	E-43
Plant Computer	Group Display 165	SELECTED COMPUTER POINT	

POSSIBLE CAUSES

Any point monitored in Group Display 165 exceeding either a critical low or critical high alarm setpoint
OR digital point in an abnormal state.

AUTOMATIC ACTIONS

None

(continued)

(continued) **WINDOW** **E-43**

NOTE
Points which activate this alarm and the Plant Computer alarm display can be enabled, disabled, added or removed **PER** Selected Computer Point Annunciator section of OI-50A, Plant Computer.

CONDITION	RESPONSE
1. Plant Computer alarm.	1. **PERFORM** the following: a. **CHECK** the Plant Computer alarm display to determine which point(s) are out of limits. b. **ACKNOWLEDGE** the Plant Computer points in alarm. c. **PERFORM** any required actions necessary to mitigate the alarm. **NOTE** **NO** action is required for leak rate spikes if the indicated leak rate is returning to within 20 GPD of the previous value in less than 30 minutes. d. **IF** SG tube leakage is greater than 5 GPD, **THEN IMPLEMENT** AOP-10, ABNORMAL SECONDARY CHEMISTRY CONDITIONS.

ANNUNCIATOR COMPENSATORY ACTIONS

MONITOR Plant Computer Group Display 165 at least hourly.

REFERENCES

None

DEVICE	SETPOINT	WINDOW	E-44
EDGE Control Module	Less than 50K ohms to ground on an alarm circuit	ANN GROUND DETECTED	

POSSIBLE CAUSES

> **NOTE**
> The EDGE system is an annunciator ground detecting system operated by maintenance personnel.

Less than 50K ohms to ground on an alarm circuit and EDGE system being operated.

AUTOMATIC ACTIONS

None

CONDITION	RESPONSE
1. Annunciator ground.	1. Perform the following: a. **NOTIFY** the Electric Shop. b. **DETERMINE** the affected modules. c. **MONITOR** the parameters per the affected modules alarm manual's Annunciator Compensatory Actions.

ANNUNCIATOR COMPENSATORY ACTIONS

None

REFERENCES

Electro Devices vendor drawing, 520-001

DEVICE	SETPOINT	WINDOW	E-45
SPDS digital contact point ID: SPALMCCO	Any SPDS Critical Safety Function box yellow or red alarm	SPDS	

POSSIBLE CAUSES

Refer to the SPDS alarm manual.

AUTOMATIC ACTIONS

None

CONDITION	RESPONSE
1. SPDS alarm.	1. **DETERMINE AND ACKNOWLEDGE** the SPDS alarm **PER** Alarms and Indications section of OI-50B, Safety Parameter Display System.

ANNUNCIATOR COMPENSATORY ACTIONS

MONITOR the SPDS at least hourly.

REFERENCES

None

DEVICE	SETPOINT	WINDOW	E-46
DAS Panel Alarm	N/A	DAS	

POSSIBLE CAUSES

- High cabinet temperature
- Pulse accumulator overflow
- Internal power supply failure
- Automatic restart disable
- System shutdown or stall
- Loss of external clock
- Excess zero offset or span deviation
- Repeated data communication error
- Loss of remote multiplexer
- Loss of an A/D converter
- Loss of data highway A
- Loss of data highway B
- Incore Detector exceeds high alarm limit

AUTOMATIC ACTIONS

None

NOTE

If DAS "B" has failed, CEAs can **NOT** be moved in Manual Sequential. Also the digital display on 1C05 will **NOT** change if a new CEA is selected on the CEDS Control Panel.

(continued)

(continued) **WINDOW** **E-46**

CONDITION	RESPONSE
1. Data Acquisition System alarm.	1. **PERFORM** the following: a. **IF** any individual alarm (other than "EXCESS ZERO OFFSET/SPAN DEVIATION or INCORE") is indicated, **THEN CONTACT** the Computer Maintenance group. b. **IF** "EXCESS ZERO OFFSET/SPAN DEVIATION" alarm is indicated, **THEN RESET** the alarm and **CONTINUE** normal operation. c. **IF** "INCORE" Alarm is indicated, **THEN**: (1) **SIGN** onto the DAS computer to monitor the printer file as follows: (a) **IF** username is prompted, **THEN PERFORM** the following: 1. In username, **TYPE** omni 2. **DEPRESS** <Return>. (b) In password, **TYPE** das2000 (c) **DEPRESS** <Return>.
(continued)	(continued)

(continued)

(continued) **WINDOW** **E-46**

CONDITION	RESPONSE
1. (continued)	1.c. (continued) (2) **IF** the DAS Main Menu is **NOT** displayed, **THEN START** the DAS console: (a) **OPEN** a new terminal window by **CLICKING** on "Window" **AND** selecting "New" from the drop-down menu. (b) In the new window, **TYPE** cnsl (c) **DEPRESS** <Return>. (3) **OPEN** a new terminal window by **CLICKING** on "Window" **AND** selecting "New" from the drop-down menu. **NOTE** The new window should have a prompt identifying the Unit and DAS channel, ie. u1dasb$ identifies Unit-1 DAS channel B. This prompt is where to type commands. **NOTE** There is a single space after tail and before PRINTER. The entry is case sensitive. (4) **TYPE** tail -f PRINTER (5) **DEPRESS** <Return>. (6) **MONITOR** the DAS printer file to determine the Incore detector that is in alarm. (7) **RESET** the alarm.
(continued)	(continued)

(continued)

(continued) **WINDOW** **E-46**

CONDITION	RESPONSE
1. (continued)	1. (continued) d. **IF** DAS failure leads to a Plant Computer failure while in Mode 1 or 2, **THEN IMPLEMENT** AOP-7H, Loss of Plant Computer In Mode One or Two.

ANNUNCIATOR COMPENSATORY ACTIONS

IF the Plant Computer is failed while in Mode 1 or 2 and the DAS alarm is unavailable, **THEN REQUEST** the Supervisor, Computer Maintenance, to provide a method of receiving Incore Detector alarms in the Control Room.

Monitor Diagnostic Alarm Panel once per hour.

REFERENCES

None

DEVICE	SETPOINT	WINDOW	E-47
1CPU0C153 1AY0C153	None	TSC COMPUTER	

POSSIBLE CAUSES

The Technical Support Center Computer has failed or is not receiving information from the Data Acquisition System (DAS).

AUTOMATIC ACTIONS

None

CONDITION	RESPONSE
1. The TSC Computer has lost communications with the DAS.	1. **CHECK** that the DAS window is clear.
2. The TSC Computer server in the 72' Computer Room has failed.	2. **CONTACT** the Computer Group (CM or ISD).

ANNUNCIATOR COMPENSATORY ACTIONS

USE Plant Computer

REFERENCES

None

DEVICE	SETPOINT		WINDOW	E-48
1MODU1Y1021/ 1RY1Y1021	**ALERT GAP**	11A/11B/12A/12B	RCPS VIBRATION	
	LOW	-4.5v		
	HIGH	-9 .0v		
	***ALERT VIB**			
	HIGH	+3 mils		
	DANGER VIB			
	HIGH	25 mils		

* The ALERT setpoint is set 3 mils above normal running vibration - **NOT** to exceed 23 mils

POSSIBLE CAUSES

- Bearing failures
- Bowed shaft
- Loose or failed reactor coolant pump vibration probe
- Reactor Coolant System pipe rupture
- Reactor coolant pump coupling failure
- Reactor coolant pump normal shutdown
- Loss of power to vibration system
- Normal upon start of RCP

AUTOMATIC ACTIONS

- NONE

(continued)

(continued) **WINDOW** **E-48**

GENERAL INFORMATION:

NOTE

Vibration instrument malfunctions may be evaluated by comparing the individual Y3/X3 channels. If vibration instrument readings are within 3 mils of each other, then the vibration probe can be considered a valid reading. If vibration instrument readings are greater than 3 mils of each other, then the vibration probe may be failing.

- During normal non-event operation the "Overall Rack Status" LED, the "Display Unit OK" and the 8 individual channel "OK" LED should be lit.
- Loss of "OK" Status - Contact System Engineering and Maintenance & Component Engineering.
- Channel Alert - Is reported if an alert condition is sensed on **BOTH** RCP probes or if RCP probe has failed and alert condition is sensed on the operable probe.
  - Event acknowledge button must be depressed to provide reflash of the recent event light, if another event happens.
  - The danger and alert alarms are latching and must be manually cleared.

(continued)

(continued) **WINDOW** **E-48**

NOTE
To clear the channel alert or danger alarm, the condition that has caused the alarm must be cleared for a minimum of 3 seconds before resetting.

- To clear a channel alert or danger alarm LED:

  1. Press " event acknowledge" push button.
  2. Press "menu" push button.
  3. Use arrow buttons to select "Reset Rack".
  4. Press "select" push button.

- The alarm list may be accessed to determine alarm history.

  1. Press "menu" push button.
  2. Use arrow buttons to select "alarm events" list.
  3. Press "select" push button.

     a. Determine the specific alarm:

        - RCP 11A (X3) S2C1
          (Y3) S2C2
        - RCP 11B (X3) S2C3
          (Y3) S2C4
        - RCP 12A (X3) S3C1
          (Y3) S3C2
        - RCP 12B (X3) S3C3
          (Y3) S3C4

  4. To return to normal monitoring, press "select".

(continued)

(continued) **WINDOW** **E-48**

CONDITION	RESPONSE
1. Reactor coolant pump(s) vibration. (continued)	1. **PERFORM** the following: a. **IF** the Y3 **AND** X3 indications are HIGH out of range as indicated by: **[B0368]** • RCP indication reaches 40 mils - OR - • ALL the following conditions exist: • ZERO mils indicated on the meter • OK light is out • DANGER light lit (continued)

(continued)

(continued) **WINDOW** **E-48**

CONDITION	RESPONSE
1. (continued)	1.a. (continued) **THEN PERFORM** either of the following: • **IF** the reactor is shutdown, **THEN SECURE** the affected RCP **PER** OI-1A, Reactor Coolant System and Pump Operations, **AND COOLDOWN PER** OP-5, Plant Shutdown from Hot Standby to Cold Shutdown. - OR - • **IF** the reactor is **NOT** shutdown, **THEN**: (1) **TRIP** the reactor. (2) **IMPLEMENT** Reactivity Control section of EOP-0, Post-Trip Immediate Actions. (3) **SECURE** the affected RCP. (4) **COMPLETE** EOP-0, Post-Trip Immediate Actions.
(continued)	(continued)

(continued)

(continued) **WINDOW** **E-48**

CONDITION	RESPONSE
1. (continued)	1.a. (continued) **NOTE** Vibration instrument malfunctions may be evaluated by comparing the individual Y3 and X3 channels. If vibration instrument readings are within 3 mils of each other, then the vibration probe can be considered a valid reading. If vibration instrument readings are greater than 3 mils of each other, then the vibration probe may be failing. b. **IF** any Y3 or X3 indication rises to the ALERT level, **THEN CONTACT** Maintenance & Component Engineering Unit and System Engineering during working hours. c. **IF** any Y3 or X3 indication rises to the 20 mil level, **THEN CONTACT** Maintenance & Component Engineering Unit and System Engineering immediately. d. **IF** the Y3 and X3 indication exceed the 20 mil level, **THEN** an engineering evaluation shall be conducted within 6 hours for continued operation.
(continued)	(continued)

(continued) **WINDOW** **E-48**

CONDITION	RESPONSE
1. (continued)	1. (continued) e. **IF** the Y3 **AND** X3 indications exceed the 25 mils DANGER level for greater than 5 minutes, **THEN**: (1) **COMMENCE** an expeditious plant shutdown **PER** OP-3, Normal Power Operation, **AND** OP-4, Plant Shutdown from Power Operation to Hot Standby. (2) **CONTACT** the System Manager. (3) **IF** the Y3 **AND** X3 indications lower to below the 25 mil DANGER level during plant shutdown, **THEN**: • **STABILIZE** the plant at the current power level • **PERFORM** an engineering evaluation for continued operation (4) **WHEN** the reactor is shutdown, **THEN SECURE** the affected RCP **PER** OI-1A, Reactor Coolant System and Pump Operations, **AND COOLDOWN PER** OP-5, Plant Shutdown from Hot Standby to Cold Shutdown. f. **IF** the "OK" light is out **AND** no other alarms or high vibration conditions exist, **THEN CONTACT** I&C Maintenance.

(continued)

(continued) **WINDOW** **E-48**

ANNUNCIATOR COMPENSATORY ACTIONS

MONITOR reactor coolant pump Y3/X3 vibration readings at least hourly.

REFERENCES

1E-77 (61-077-B), Sh.106

DEVICE	SETPOINT	WINDOW	E-49
1C07B, RCP's 11A status panel	N/A	**11A RCP AUX STATUS PANEL**	

POSSIBLE CAUSES

1C07B, RCP's 11A status panel alarm.

AUTOMATIC ACTIONS

None

CONDITION	RESPONSE
1. 11A RCP alarm.	1. **DETERMINE** cause of alarm from 1C07B, RCP's 11A status panel **AND REFER** to 1C07B alarm manual.

ANNUNCIATOR COMPENSATORY ACTIONS

MONITOR 1C07B, RCP's 11A status panel at least hourly.

REFERENCES

1E-87 (61-087-B), Sh.14JJ

DEVICE	SETPOINT	WINDOW	E-50
1-TIA-158 1-TIA-159	190° F (186 to 194° F)	11A RCP THRUST BRG TEMP HI	

POSSIBLE CAUSES

- Loss of oil cooler Component Cooling flow
- Loss of bearing oil flow
- Bearing failure

AUTOMATIC ACTIONS

None

(continued)

(continued) **WINDOW** **E-50**

NOTE
The alarm is common for upward and downward faces of the thrust bearing. The alarm card, E-50, supplies power to alarm cards E-19, 51, 54, 55, 58, 59, 62 and 63.

CONDITION	RESPONSE
1. 11A RCP thrust bearing high temperature.	1. **PERFORM** the following: a. **CHECK** upper oil reservoir level normal. b. IF alarm is due to Component Cooling failure, THEN **IMPLEMENT** AOP-7C, Loss of Component Cooling Water. c. IF thrust bearing temperature exceeds 195° F, THEN with Shift Manager or Control Room Supervisor approval: (1) **TRIP** the reactor. (2) **IMPLEMENT** Reactivity Control section of EOP-0, Post-Trip Immediate Actions. (3) **SECURE** the affected RCP(s). (4) **COMPLETE** EOP-0, Post-Trip Immediate Actions.

ANNUNCIATOR COMPENSATORY ACTIONS

- **MONITOR** 11A RCP thrust bearing temperature at least hourly
- IF alarm card E-50 is removed from the cable spreading room alarm panel, THEN **LOG** alarm windows E-19, 51, 54, 55, 58, 59, 62 and 63 out of service

REFERENCES

1E-75 (61-075-C), Sh.2

DEVICE	SETPOINT	WINDOW	E-51
1-TIA-151	170 °F (±4° F)	11A RCP SEAL •TEMP HI •PRESS	
1-PIA-152	1716 PSIA (± 25 PSIA) (High) 1316 PSIA (± 25 PSIA) (Low)		
1-PIA-153	983 PSIA (± 25 PSIA) (High) 583 PSIA (± 25 PSIA) (Low)		

POSSIBLE CAUSES

- High temperature:
  - Component Cooling System high temperature
  - Reduced Component Cooling water flow
  - Low reactor coolant pump seal bleed-off flow
- High pressure:
  - Seal(s) failure
  - Loss of reactor coolant pump seal bleed-off flow
- Low pressure:
  - Downstream seal(s) failure
  - Seal pressure sensing line leak

AUTOMATIC ACTIONS

None

(continued)

(continued)

WINDOW **E-51**

CONDITION	RESPONSE
1. 11A RCP seal high temperature.	1. **PERFORM** the following: a. **CHECK** RCP seal bleed-off flow normal. b. IF alarm is due to Component Cooling failure, THEN **IMPLEMENT** AOP-7C, Loss of Component Cooling Water. c. IF the RCP seal bleed-off temperature exceeds 200° F, THEN with Shift Manager or Control Room Supervisor approval: (1) **TRIP** the reactor. (2) **IMPLEMENT** Reactivity Control section of EOP-0, Post-Trip Immediate Actions. (3) **SECURE** 11A RCP. (4) **COMPLETE** EOP-0, Post-Trip Immediate Actions.
(continued)	(continued)

(continued)

(continued) **WINDOW** **E-51**

CONDITION	RESPONSE
2. 11A RCP seal high or low pressure.	2. **PERFORM** the following: a. **CHECK** RCP seal bleed-off flow normal. **NOTE** If RCP seal bleed-off flow is less than normal (or zero) with normal seal pressure, the vapor seal may be failed. • **IF** the vapor seal is determined to be failed, **THEN IMPLEMENT** AOP-2A, Excessive Reactor Coolant Leakage **CAUTION** **Debris from a failed seal may propagate to remaining seal stages, eventually leading to complete seal failure.** b. **IF** alarm is due to the failure of ONE seal, **THEN** closely monitor and trend the remaining seals for an increased rate of degradation **AND CONTACT** the System Engineer immediately to provide an evaluation of continued operability **PER** CNG-OP-1.01-1002, Conduct of Operability Determinations/ Functionality Assessments. 04800
(continued)	(continued)

(continued)

(continued) **WINDOW** **E-51**

CONDITION	RESPONSE
2. (continued)	2. (continued) c. **IF** alarm is due to the failure of TWO or more seals, **THEN**: (1) **COMMENCE** an expeditious plant shutdown **PER** OP-3, Normal Power Operation, and OP-4, Plant Shutdown from Power Operation to Hot Standby. (2) **WHEN** the reactor is shutdown, **THEN COOLDOWN** the plant to less than 350° F **PER** OP-5, Plant Shutdown from Hot Standby to Cold Shutdown. (3) **IF** at any time during cooldown, THREE seals are failed, **THEN** immediately **SECURE** 11A RCP **PER** OI-1A, Reactor Coolant System and Pump Operations. (4) **ENSURE** 11A RCP is secured.

04800

ANNUNCIATOR COMPENSATORY ACTIONS

MONITOR 11A RCP seal temperature and pressures at least hourly.

REFERENCES

1E-75 (61-075-C), Sh.2

DEVICE	SETPOINT	WINDOW	E-52
1-VS-151 1-VS-152	0.7g (0.6 to 0.8g) above normal	11A RCP VIBRATION	

POSSIBLE CAUSES

- Bearing failures
- Reactor coolant pump coupling failure
- Bowed shaft
- Reactor Coolant System pipe rupture
- Reactor coolant pump normal shutdown

AUTOMATIC ACTIONS

None

(continued)

(continued) **WINDOW** **E-52**

CONDITION	RESPONSE
1. 11A RCP vibration.	1. **PERFORM** the following: a. **DETERMINE** the validity of the alarm compared with pump amperage, RPM and Bently-Nevada RCP vibration equipment. b. **CHECK** the RCP shaft vibration as indicated on the Bently-Nevada's equipment less than limits set in OI-1A, Reactor Coolant System and Pump Operations. c. **MONITOR** the RCP bearing oil levels and temperatures. d. **IF** the RCP vibration alarm is valid, **THEN CONTACT** Maintenance Rule Project and System Engineering immediately for an engineering evaluation. e. **IF** the RCP vibration alarm is valid and a significant rise in pump vibration is observed, **THEN** with Shift Manager or Control Room Supervisor approval: (1) **COMMENCE** an expeditious plant shutdown **PER** OP-3, Normal Power Operation, and OP-4, Plant Shutdown from Power Operation to Hot Standby. (2) **WHEN** the reactor is shutdown, **THEN SECURE** 11A RCP **PER** OI-1A, Reactor Coolant System and Pump Operations.

ANNUNCIATOR COMPENSATORY ACTIONS

MONITOR 11A RCP vibration at least hourly.

REFERENCES

1E-75 (61-075-C), Sh.2; OM-51 (60-710-E)

DEVICE	SETPOINT	WINDOW	E-53
1C07B, RCP's 11B status panel	N/A	**11B RCP AUX STATUS PANEL**	

POSSIBLE CAUSES

1C07B, RCP's 11B status panel alarm.

AUTOMATIC ACTIONS

None

CONDITION	RESPONSE
1. 11B RCP alarm.	1. **DETERMINE** cause of alarm from 1C07B, RCP's 11B status panel, **AND REFER** to 1C07B alarm manual.

ANNUNCIATOR COMPENSATORY ACTIONS

MONITOR 1C07B, RCP's 11B status panel at least hourly.

REFERENCES

1E-87 (61-087-B), Shs.14JJ, 14KK

DEVICE	SETPOINT	WINDOW	E-54
1-TIA-168 1-TIA-169	190° F (186 to 194° F) 190° F (186 to 194° F)	11B RCP THRUST BRG TEMP HI	

POSSIBLE CAUSES

- Loss of oil cooler Component Cooling flow
- Loss of bearing oil flow
- Bearing failure

AUTOMATIC ACTIONS

None

(continued)

(continued) **WINDOW** **E-54**

NOTE
The alarm is common for upward and downward faces of the thrust bearing.

CONDITION	RESPONSE
1. 11B RCP thrust bearing high temperature.	1. **PERFORM** the following: a. **CHECK** upper oil reservoir level normal. b. **IF** alarm is due to Component Cooling failure, **THEN IMPLEMENT** AOP-7C, Loss of Component Cooling Water. c. **IF** thrust bearing temperature exceeds 195° F, **THEN** with Shift Manager or Control Room Supervisor approval: (1) **TRIP** the reactor. (2) **IMPLEMENT** Reactivity Control section of EOP-0, Post-Trip Immediate Actions. (3) **SECURE** the affected RCP(s). (4) **COMPLETE** EOP-0, Post-Trip Immediate Actions.

ANNUNCIATOR COMPENSATORY ACTIONS

MONITOR 11B RCP thrust bearing temperature at least hourly.

REFERENCES

1E-75 (61-075-B), Sh.8

DEVICE	SETPOINT	WINDOW	E-55
1-TIA-161	170 °F (±4° F)	11B RCP SEAL • TEMP HI • PRESS	
1-PIA-162	1716 PSIA (± 25 PSIA) (High) 1316 PSIA (± 25 PSIA) (Low)		
1-PIA-163	983 PSIA (± 25 PSIA) (High) 583 PSIA (± 25 PSIA) (Low)		

POSSIBLE CAUSES

- High temperature:
  - Component Cooling System high temperature
  - Reduced Component Cooling water flow
  - Low reactor coolant pump seal bleed-off flow
- High pressure:
  - Seal(s) failure
  - Loss of reactor coolant pump seal bleed-off flow
- Low pressure:
  - Downstream seal(s) failure
  - Seal pressure sensing line leak

AUTOMATIC ACTIONS

None

(continued)

(continued) **WINDOW** **E-55**

CONDITION	RESPONSE
1. 11B RCP seal high temperature.	1. **PERFORM** the following: a. **CHECK** RCP seal bleed-off flow normal. b. **IF** alarm is due to Component Cooling failure, **THEN IMPLEMENT** AOP-7C, Loss of Component Cooling Water. c. **IF** the RCP seal bleed-off temperature exceeds 200° F, **THEN** with Shift Manager or Control Room Supervisor approval: (1) **TRIP** the reactor. (2) **IMPLEMENT** Reactivity Control section of EOP-0, Post-Trip Immediate Actions. (3) **SECURE** 11B RCP. (4) **COMPLETE** EOP-0, Post-Trip Immediate Actions.
(continued)	(continued)

(continued) **WINDOW** **E-55**

CONDITION	RESPONSE
2. 11B RCP seal high or low pressure.	2. **PERFORM** the following: a. **CHECK** RCP seal bleed-off flow normal. **NOTE** If RCP seal bleed-off flow is less than normal (or zero) with normal seal pressure, the vapor seal may be failed. • **IF** the vapor seal is determined to be failed, **THEN IMPLEMENT** AOP-2A, Excessive Reactor Coolant Leakage **CAUTION** **Debris from a failed seal may propagate to remaining seal stages, eventually leading to complete seal failure.** b. **IF** alarm is due to the failure of ONE seal, **THEN** closely monitor and trend the remaining seals for an increased rate of degradation **AND CONTACT** the System Engineer immediately to provide an evaluation of continued operability **PER** CNG-OP-1.01-1002, Conduct of Operability Determinations/ Functionality Assessments.
(continued)	(continued)

04800

(continued)

(continued) **WINDOW** **E-55**

CONDITION	RESPONSE
2. (continued)	2. (continued) c. **IF** alarm is due to the failure of TWO or more seals, **THEN**: (1) **COMMENCE** an expeditious plant shutdown **PER** OP-3, Normal Power Operation, and OP-4, Plant Shutdown from Power Operation to Hot Standby. (2) **WHEN** the reactor is shutdown, **THEN COOLDOWN** the plant to less than 350° F **PER** OP-5, Plant Shutdown from Hot Standby to Cold Shutdown. (3) **IF** at any time during cooldown, THREE seals are failed, **THEN** immediately **SECURE** 11B RCP **PER** OI-1A, Reactor Coolant System and Pump Operations. (4) **ENSURE** 11B RCP is secured.

04800

ANNUNCIATOR COMPENSATORY ACTIONS

MONITOR 11B RCP seal temperature and pressures at least hourly.

REFERENCES

1E-75 (61-075-B), Sh.8

DEVICE	SETPOINT	WINDOW	E-56
1-VS-161 1-VS-162	0.7g (0.6 to 0.8g) above normal	11B RCP VIBRATION	

POSSIBLE CAUSES

- Bearing failures
- Reactor coolant pump coupling failure
- Bowed shaft
- Reactor Coolant System pipe rupture
- Reactor coolant pump normal shutdown

AUTOMATIC ACTIONS

None

(continued)

(continued) **WINDOW** **E-56**

CONDITION	RESPONSE
1. 11B RCP vibration.	1. **PERFORM** the following: a. **DETERMINE** the validity of the alarm compared with pump amperage, RPM and Bently-Nevada RCP vibration equipment. b. **CHECK** the RCP shaft vibration as indicated on the Bently-Nevada's equipment less than limits set in OI-1A, Reactor Coolant System and Pump Operations. c. **MONITOR** the RCP bearing oil levels and temperatures. d. **IF** the RCP vibration alarm is valid, **THEN CONTACT** Maintenance Rule Project and System Engineering immediately for an engineering evaluation. e. **IF** the RCP vibration alarm is valid **AND** a significant rise in pump vibration is observed, **THEN** with Shift Manager or Control Room Supervisor approval: (1) **COMMENCE** an expeditious plant shutdown **PER** OP-3, Normal Power Operation, and OP-4, Plant Shutdown from Power Operation to Hot Standby. (2) **WHEN** the reactor is shutdown, **THEN SECURE** 11B RCP **PER** OI-1A, Reactor Coolant System and Pump Operations.

ANNUNCIATOR COMPENSATORY ACTIONS

MONITOR 11B RCP vibration at least hourly.

REFERENCES

1E-75 (61-075-B), Sh.8; OM-51 (60-710-E)

DEVICE	SETPOINT	WINDOW	E-57
1C07B, RCP's 12A status panel	N/A	12A RCP AUX STATUS PANEL	

POSSIBLE CAUSES

1C07B, RCP's 12A status panel alarm.

AUTOMATIC ACTIONS

None

CONDITION	RESPONSE
1. 12A RCP alarm.	1. **DETERMINE** cause of alarm from 1C07B, RCP's 12A status panel, **AND REFER** to 1C07B alarm manual.

ANNUNCIATOR COMPENSATORY ACTIONS

MONITOR 1C07B, RCP's 12A status panel at least hourly.

REFERENCES

1E-87 (61-087-B), Sh.14JJ

DEVICE	SETPOINT	WINDOW	E-58
1-TIA-178 1-TIA-179	190° F (186 to 194° F)	12A RCP THRUST BRG TEMP HI	

POSSIBLE CAUSES

- Loss of oil cooler Component Cooling flow
- Loss of bearing oil flow
- Bearing failure

AUTOMATIC ACTIONS

None

(continued)

(continued) **WINDOW** **E-58**

NOTE
The alarm is common for upward and downward faces of the thrust bearing.

CONDITION	RESPONSE
1. 12A RCP thrust bearing high temperature.	1. **PERFORM** the following: a. **CHECK** upper oil reservoir level normal. b. **IF** alarm is due to Component Cooling failure, **THEN IMPLEMENT** AOP-7C, Loss of Component Cooling Water. c. **IF** thrust bearing temperature exceeds 195° F, **THEN** with Shift Manager or Control Room Supervisor approval: (1) **TRIP** the reactor. (2) **IMPLEMENT** Reactivity Control section of EOP-0, Post-Trip Immediate Actions. (3) **SECURE** the affected RCP(s). (4) **COMPLETE** EOP-0, Post-Trip Immediate Actions.

ANNUNCIATOR COMPENSATORY ACTIONS

MONITOR 12A RCP thrust bearing temperature at least hourly.

REFERENCES

1E-75 (61-075-C), Sh.5

DEVICE	SETPOINT	WINDOW	E-59
1-TIA-171	170 °F (±4° F)	12A RCP SEAL •TEMP HI •PRESS	
1-PIA-172	1716 PSIA (± 25 PSIA) (High) 1316 PSIA (± 25 PSIA) (Low)		
1-PIA-173	983 PSIA (± 25 PSIA) (High) 583 PSIA (± 25 PSIA) (Low)		

POSSIBLE CAUSES

- High temperature:
  - Component Cooling System high temperature
  - Reduced Component Cooling water flow
  - Low reactor coolant pump seal bleed-off flow
- High pressure:
  - Seal(s) failure
  - Loss of reactor coolant pump seal bleed-off flow
- Low pressure:
  - Downstream seal(s) failure
  - Seal pressure sensing line leak

AUTOMATIC ACTIONS

None

(continued)

(continued) **WINDOW** **E-59**

CONDITION	RESPONSE
1. 12A RCP seal high temperature.	1. **PERFORM** the following: a. **CHECK** RCP seal bleed-off flow normal. b. **IF** alarm is due to Component Cooling failure, **THEN IMPLEMENT** AOP-7C, Loss of Component Cooling Water. c. **IF** the RCP seal bleed-off temperature exceeds 200° F, **THEN** with Shift Manager or Control Room Supervisor approval: (1) **TRIP** the reactor. (2) **IMPLEMENT** Reactivity Control section of EOP-0, Post-Trip Immediate Actions. (3) **SECURE** 12A RCP. (4) **COMPLETE** EOP-0, Post-Trip Immediate Actions.
(continued)	(continued)

(continued) **WINDOW** **E-59**

CONDITION	RESPONSE
2. 12A RCP seal high or low pressure.	2. **PERFORM** the following: a. **CHECK** RCP seal bleed-off flow normal. **NOTE** If RCP seal bleed-off flow is less than normal (or zero) with normal seal pressure, the vapor seal may be failed. • **IF** the vapor seal is determined to be failed, **THEN IMPLEMENT** AOP-2A, Excessive Reactor Coolant Leakage **CAUTION** **Debris from a failed seal may propagate to remaining seal stages, eventually leading to complete seal failure.** b. **IF** alarm is due to the failure of ONE seal, **THEN** closely monitor and trend the remaining seals for an increased rate of degradation **AND CONTACT** the System Engineer immediately to provide an evaluation of continued operability **PER** CNG-OP-1.01-1002, Conduct of Operability Determinations/ Functionality Assessments. 04800
(continued)	(continued)

(continued)

(continued) **WINDOW** **E-59**

CONDITION	RESPONSE
2. (continued)	2. (continued) c. **IF** alarm is due to the failure of TWO or more seals, **THEN**: (1) **COMMENCE** an expeditious plant shutdown **PER** OP-3, Normal Power Operation, and OP-4, Plant Shutdown from Power Operation to Hot Standby. (2) **WHEN** the reactor is shutdown, **THEN COOLDOWN** the plant to less than 350° F **PER** OP-5, Plant Shutdown from Hot Standby to Cold Shutdown. (3) **IF** at any time during cooldown, THREE seals are failed, **THEN** immediately **SECURE** 12A RCP **PER** OI-1A, Reactor Coolant System and Pump Operations. (4) **ENSURE** 12A RCP is secured.

04800

ANNUNCIATOR COMPENSATORY ACTIONS

MONITOR 12A RCP seal temperature and pressures at least hourly.

REFERENCES

1E-75 (61-075-C), Sh.5

DEVICE	SETPOINT	WINDOW	E-60
1-VS-171 1-VS-172	0.7g (0.6 to 0.8g) above normal	**12A RCP VIBRATION**	

POSSIBLE CAUSES

- Bearing failures
- Reactor coolant pump coupling failure
- Bowed shaft
- Reactor Coolant System pipe rupture
- Reactor coolant pump normal shutdown

AUTOMATIC ACTIONS

None

(continued)

(continued) **WINDOW** **E-60**

CONDITION	RESPONSE
1. 12A RCP vibration.	1. **PERFORM** the following: a. **DETERMINE** the validity of the alarm compared with pump amperage, RPM and Bently-Nevada RCP vibration equipment. b. **CHECK** the RCP shaft vibration as indicated on the Bently-Nevada's equipment less than limits set in OI-1A, Reactor Coolant System and Pump Operations. c. **MONITOR** the RCP bearing oil levels and temperatures. d. **IF** the RCP vibration alarm is valid, **THEN CONTACT** Maintenance Rule Project and System Engineering immediately for an engineering evaluation. e. **IF** the RCP vibration alarm is valid **AND** a significant rise in pump vibration is observed, **THEN** with Shift Manager or Control Room Supervisor approval: (1) **COMMENCE** an expeditious plant shutdown **PER** OP-3, Normal Power Operation, and OP-4, Plant Shutdown from Power Operation to Hot Standby. (2) **WHEN** the reactor is shutdown, **THEN SECURE** 12A RCP **PER** OI-1A, Reactor Coolant System and Pump Operations.

ANNUNCIATOR COMPENSATORY ACTIONS

MONITOR 12A RCP vibration at least hourly.

REFERENCES

1E-75 (61-075-C) Sh.5; OM-51 (60-710-E)

DEVICE	SETPOINT	WINDOW	E-61
1C07B, RCP's 12B status panel	N/A	**12B RCP AUX STATUS PANEL**	

POSSIBLE CAUSES

1C07B, RCP's 12B status panel alarm.

AUTOMATIC ACTIONS

None

CONDITION	RESPONSE
1. 12B RCP alarm.	1. **DETERMINE** cause of alarm from 1C07B, RCP's 12B status panel, **AND REFER** to 1C07B alarm manual.

ANNUNCIATOR COMPENSATORY ACTIONS

MONITOR 1C07B, RCP's 12B status panel at least hourly.

REFERENCES

1E-87 (61-087-B), Sh.14KK

DEVICE	SETPOINT	WINDOW	E-62
1-TIA-188 1-TIA-189	190° F (186 to 194° F)	12B RCP THRUST BRG TEMP HI	

POSSIBLE CAUSES

- Loss of oil cooler Component Cooling flow
- Loss of bearing oil flow
- Bearing failure

AUTOMATIC ACTIONS

None

(continued)

(continued) **WINDOW** **E-62**

NOTE
The alarm is common for upward and downward faces of the thrust bearing.

CONDITION	RESPONSE
1. 12B RCP thrust bearing high temperature.	1. **PERFORM** the following: a. **CHECK** upper oil reservoir level normal. b. **IF** alarm is due to Component Cooling failure, **THEN IMPLEMENT** AOP-7C, Loss of Component Cooling Water. c. **IF** thrust bearing temperature exceeds 195° F, **THEN** with Shift Manager or Control Room Supervisor approval: (1) **TRIP** the reactor. (2) **IMPLEMENT** Reactivity Control section of EOP-0, Post-Trip Immediate Actions. (3) **SECURE** the affected RCP(s). (4) **COMPLETE** EOP-0, Post-Trip Immediate Actions.

ANNUNCIATOR COMPENSATORY ACTIONS

MONITOR 12B RCP thrust bearing temperature at least hourly.

REFERENCES

1E-75 (61-075-C), Sh.11

DEVICE	SETPOINT	WINDOW	E-63
1-TIA-181	170 °F (±4° F)	12B RCP SEAL •TEMP HI •PRESS	
1-PIA-182	1716 PSIA (± 25 PSIA) (High) 1316 PSIA (± 25 PSIA) (Low)		
1-PIA-183	983 PSIA (± 25 PSIA) (High) 583 PSIA (± 25 PSIA) (Low)		

POSSIBLE CAUSES

- High temperature:
  - Component Cooling System high temperature
  - Reduced Component Cooling water flow
  - Low reactor coolant pump seal bleed-off flow
- High pressure:
  - Seal(s) failure
  - Loss of reactor coolant pump seal bleed-off flow
- Low pressure:
  - Downstream seal(s) failure
  - Seal pressure sensing line leak

AUTOMATIC ACTIONS

None

(continued)

(continued) **WINDOW** **E-63**

CONDITION	RESPONSE
1. 12B RCP seal high temperature.	1. **PERFORM** the following: a. **CHECK** RCP seal bleed-off flow normal. b. **IF** alarm is due to Component Cooling failure, **THEN IMPLEMENT** AOP-7C, Loss of Component Cooling Water. c. **IF** the RCP seal bleed-off temperature exceeds 200° F, **THEN** with Shift Manager or Control Room Supervisor approval: (1) **TRIP** the reactor. (2) **IMPLEMENT** Reactivity Control section of EOP-0, Post-Trip Immediate Actions. (3) **SECURE** 12B RCP. (4) **COMPLETE** EOP-0, Post-Trip Immediate Actions.
(continued)	(continued)

(continued) **WINDOW** **E-63**

CONDITION	RESPONSE
2. 12B RCP seal high or low pressure.	2. **PERFORM** the following: a. **CHECK** RCP seal bleed-off flow normal. **NOTE** If RCP seal bleed-off flow is less than normal (or zero) with normal seal pressure, the vapor seal may be failed. • **IF** the vapor seal is determined to be failed, **THEN IMPLEMENT** AOP-2A, Excessive Reactor Coolant Leakage **CAUTION** **Debris from a failed seal may propagate to remaining seal stages, eventually leading to complete seal failure.** b. **IF** alarm is due to the failure of ONE seal, **THEN** closely monitor and trend the remaining seals for an increased rate of degradation **AND CONTACT** the System Engineer immediately to provide an evaluation of continued operability **PER** CNG-OP-1.01-1002, Conduct of Operability Determinations/ Functionality Assessments. 04800
(continued)	(continued)

(continued)

(continued) **WINDOW** **E-63**

CONDITION	RESPONSE
2. (continued)	2. (continued) c. **IF** alarm is due to the failure of TWO or more seals, **THEN**: (1) **COMMENCE** an expeditious plant shutdown **PER** OP-3, Normal Power Operation, and OP-4, Plant Shutdown from Power Operation to Hot Standby. (2) **WHEN** the reactor is shutdown, **THEN COOLDOWN** the plant to less than 350° F **PER** OP-5, Plant Shutdown from Hot Standby to Cold Shutdown. (3) **IF** at any time during cooldown, THREE seals are failed, **THEN** immediately **SECURE** 12B RCP **PER** OI-1A, Reactor Coolant System and Pump Operations. (4) **ENSURE** 12B RCP is secured.

04800

ANNUNCIATOR COMPENSATORY ACTIONS

MONITOR 12B RCP seal temperature and pressures at least hourly.

REFERENCES

1E-75 (61-075-C), Sh.11

DEVICE	SETPOINT	WINDOW	E-64
1-VS-181 1-VS-182	0.7g (0.6 to 0.8g) above normal	12B RCP VIBRATION	

POSSIBLE CAUSES

- Bearing failures
- Reactor coolant pump coupling failure
- Bowed shaft
- Reactor Coolant System pipe rupture
- Reactor coolant pump normal shutdown

AUTOMATIC ACTIONS

None

(continued)

(continued) **WINDOW** **E-64**

CONDITION	RESPONSE
1. 12B RCP vibration.	1. **PERFORM** the following: a. **DETERMINE** the validity of the alarm compared with pump amperage, RPM and Bently-Nevada RCP vibration equipment. b. **CHECK** the RCP shaft vibration as indicated on the Bently-Nevada's equipment less than limits set in OI-1A, Reactor Coolant System and Pump Operations. c. **MONITOR** the RCP bearing oil levels and temperatures. d. **IF** the RCP vibration alarm is valid, **THEN CONTACT** Maintenance Rule Project and System Engineering immediately for an engineering evaluation. e. **IF** the RCP vibration alarm is valid and significant rise in pump vibration is observed, **THEN** with Shift Manager or Control Room Supervisor approval: (1) **COMMENCE** an expeditious plant shutdown **PER** OP-3, Normal Power Operation, and OP-4, Plant Shutdown from Power Operation to Hot Standby. (2) **WHEN** the reactor is shutdown, **THEN SECURE** 12B RCP **PER** OI-1A, Reactor Coolant System and Pump Operations.

ANNUNCIATOR COMPENSATORY ACTIONS

MONITOR 12B RCP vibration at least hourly.

REFERENCES

1E-75 (61-075-C), Sh.11; OM-51 (60-710-E)

CALVERT CLIFFS NUCLEAR POWER PLANT

UNIT ONE

1C07-ALM

CHEMICAL & VOLUME CONTROL ALARM MANUAL

REVISION 37

Safety Related

REFERRAL USE

Approval Authority: Kent Mills 3/18/2004
signature/date

Effective Date: 3/19/2004

LIST OF EFFECTIVE PAGES

PAGE NUMBER	REVISION
1-75	37

PROCEDURE ALTERATIONS

PAGE NUMBER	REVISION/CHANGE
21	03705

1.0 PURPOSE

A. This Alarm Manual provides information to the Operator for diagnosis of alarm conditions and recommended actions to mitigate the consequences of the alarm condition.

B. This Alarm Manual provides pre-planned compensatory actions that should be considered for implementation when an alarm is not available.

2.0 APPLICABILITY/SCOPE

This Alarm Manual addresses Control Room annunciator panel 1C07.

3.0 REFERENCES AND DEFINITIONS

3.1 DEVELOPMENTAL REFERENCES

A. Drawings:

1. 1E-87 (61-087-E), Sh.6, Chemical and Volume Control System Control Board 1C07

2. OM-73 (60-730-E), Chemical and Volume Control System

B. NO-1-201, Calvert Cliffs Operating Manual

C. NO-1-206, Alarm Annunciator Control

D. Additional references are listed in the response for each alarm window.

3.2 PERFORMANCE REFERENCES

A. Alarm Response Manual

1C43

1C98C

B. AOP-2A, Excessive Reactor Coolant Leakage

C. AOP-6A, High Reactor Coolant Activity

D. AOP-7D, Loss of Instrument Air

E. OI-1A, Reactor Coolant System and Pump Operations

F. OI-2A, Chemical and Volume Control System

G. OI-2B, CVCS Boration, Dilution and Makeup Operations

H. OI-2C, Concentrated Boric Acid System Operations

I. OI-2D, Purification System Operation

J. OI-44, Boronometer and Process Radiation Monitor

K. STP O-87-1, Borated Water Source 7 Day Operability Verification

L. TRM

M. Technical Specifications

3.3 DEFINITIONS

None

4.0 PREREQUISITES

Specific alarm received or not available.

5.0 PRECAUTIONS

A. Inappropriate actions may result if operational decisions are based solely on single alarms without consideration of associated alarms and instrumentation.

B. In no case does the information contained herein supersede an OP, OI, AOP or EOP.

6.0 PERFORMANCE

A. Upon receipt of an alarm, **DETERMINE** its validity by comparing appropriate indications to the setpoint, if there is one:

B. **IF** multiple alarms are received,
THEN EVALUATE alarms from highest to lowest priority.

> **NOTE**
> The CONDITIONS - RESPONSES are listed in hierarchical order, **NOT** as step by step instructions. Perform the response that applies to the existing condition.

C. **UTILIZING** the information for each alarm:

1. **DIAGNOSE** the condition.

2. **IMPLEMENT** the appropriate EOP or AOP
OR INITIATE appropriate responses.

7.0 POST PERFORMANCE ACTIVITIES

None

8.0 BASES

[B0121] Response to SOER 88-01, Recommendation 1, to provide indication of loss of Instrumentation Air, i.e. alarms.

[B0269] SOER 94-02, Recommendation 4.b. Verify that appropriate monitoring and/or alarm features are available or that other interim compensatory actions are taken when systems that have the potential to affect RCS boron concentration are in an abnormal configuration.

[B0427] SOER 97-01, Recommendation 3.a: Potential Loss of High Pressure Injection and Charging Capability from gas intrusion.

9.0 RECORDS

None

DEVICE	SETPOINT	WINDOW	F-01
1-TIC-221	460° F (454 to 466° F)	REGEN HX OUT TEMP HI	

POSSIBLE CAUSES

- Loss of Charging flow:
  - Charging pump(s) tripped
  - Air Binding **[B0427]**
- Excessive Letdown flow:
  - Pressurizer level too high with maximum unbalanced Letdown flow
  - Alternate Letdown control valve is open with its isolation valve open
  - Improper valve alignment
  - Regenerative HX Letdown Outlet Temperature controller, 1-TIC-221, malfunction
- Letdown Throttle Valve Controller, 1-HIC-110, failure

AUTOMATIC ACTIONS

Letdown Containment Isolation, 1-CVC-515-CV, shuts at 470° F on 1-TIC-221.

(continued)

(continued) **WINDOW** **F-01**

CONDITION	RESPONSE
1. Letdown regenerative heat exchanger outlet temperature high.	1. **PERFORM** the following: a. **IF** Letdown is isolated and operating conditions permit, **THEN SECURE** Charging **PER** OI-2A, Chemical and Volume Control System. b. **IF** Charging is required and the operating charging pump has tripped, **THEN RESTART** a charging pump **PER** OI-2A, Chemical and Volume Control System. c. **IF** Letdown Throttle Valve Controller malfunction is indicated, **THEN TAKE** manual control of 1-HIC-110. d. **RECORD** initiation of Letdown and Charging in Transient Tracking Log, as applicable.
(continued)	(continued)

(continued)

(continued) **WINDOW** **F-01**

CONDITION	RESPONSE
2. Loss of Charging Flow	2. **PERFORM** the following: a. **IF** a CHG PP is air bound as indicated by any of the following conditions, • Fluctuation of motor amps • Fluctuation in pump discharge pressure • Fluctuation in pump discharge flow • Excessive pump noise **THEN VENT** the pump **PER** OI-2A, Chemical and Volume Control System. **[B0427]** b. **IF** Charging is required and the operating charging pump has tripped, **THEN RESTART** a charging pump **PER** OI-2A, Chemical and Volume Control System. c. **RECORD** initiation of Letdown and Charging in Transient Tracking Log, as applicable.

ANNUNCIATOR COMPENSATORY ACTIONS

MONITOR Letdown regenerative heat exchanger outlet temperature at least hourly.

REFERENCES

1E-75 (61-075-B), Sh.40

DEVICE	SETPOINT	WINDOW	F-02
1-ZS-354	1-CVC-354-RV lifted	L/D 1-CVC-354-RV OPENED	

POSSIBLE CAUSES

- Diverting Letdown to WPS with CVCS Diversion to Degas Isolation, 1-CVC-325, shut
- Low Pressure Letdown Relief Valve, 1-CVC-354-RV, lifted
- Letdown Pressure controller, 1-PIC-201, failure
- Excessive Letdown flow

AUTOMATIC ACTIONS

Low Pressure Letdown Relief Valve, 1-CVC-354-RV lifts at a pressure of 205 PSIG (199 to 211 PSIG).

CONDITION	RESPONSE
1. Low Pressure Letdown Relief Valve, 1-CVC-354-RV, lifted.	1. **PERFORM** the following: a. **CHECK** Letdown flow control valves and back pressure regulators for proper operation. b. **IF** 1-CVC-354-RV fails to reseat, **THEN PERFORM** the following as necessary: • **ATTEMPT** to reseat the relief valve by mechanical agitation • **SECURE** Charging and Letdown **PER** OI-2A, Chemical and Volume Control System

ANNUNCIATOR COMPENSATORY ACTIONS

MONITOR 11 Reactor Coolant Waste Receiver Tank and Volume Control Tank for unexplained level changes or 1-CVC-354-RV tail-pipe temperature at least every 6 hours.

REFERENCES

None

DEVICE	SETPOINT	WINDOW	F-03
1-TR-4001	115° F (110 to 120° F)	BA CH A HEAT TRACING	
1-TR-4002	185° F (180 to 190° F)		

POSSIBLE CAUSES

- Dumping RCW evaporator to BAST(s)
- Loss of power
- High temperature:
  - Defective thermostat
  - Recorder malfunction
- Low temperature:
  - Blown fuse in thermostat
  - Heat tracing failure
  - Defective thermostat
  - Recorder malfunction

AUTOMATIC ACTIONS

None

(continued)

(continued) **WINDOW** **F-03**

CONDITION	RESPONSE
1. Boric acid Channel A heat trace circuit high or low temperature.	1. **PERFORM** the following: (P0048) a. **DETERMINE** which heat trace circuit is in alarm on 1C98C. b. **REFER** to OI-2C, Appendices 1 through 8 as applicable, **OR** the Auxiliary Building Operators Log to determine if the heat trace circuit is required for TRM 15.1.2 and 15.1.3. c. **IF** the heat trace circuit is required by the TRM, **THEN DETERMINE** circuit operability **PER** STP O-87-1, Borated Water Source 7 Day Operability Verification. d. **IF** dumping RCW evaporator to BAST(s), **THEN CHECK** alarm clears following the evolution.

ANNUNCIATOR COMPENSATORY ACTIONS

MONITOR the boric acid heat trace panels at least every six hours.

REFERENCES

1E-96 (61-096-E), Sh.1

DEVICE	SETPOINT	WINDOW	F-04
1-TR-4003 1-TR-4004	115° F (110 to 120° F) 185° F (180 to 190° F)	BA CH B HEAT TRACING	

POSSIBLE CAUSES

- Dumping RCW evaporator to BAST(s)
- Loss of power
- High temperature:
  - Defective thermostat
  - Recorder malfunction
- Low temperature:
  - Blown fuse in thermostat
  - Heat tracing failure
  - Defective thermostat
  - Recorder malfunction

AUTOMATIC ACTIONS

None

(continued)

(continued) **WINDOW** **F-04**

CONDITION	RESPONSE
1. Boric acid Channel B heat trace circuit high or low temperature.	1. **PERFORM** the following: (P0048) a. **DETERMINE** which heat trace circuit is in alarm on 1C99C. b. **REFER** to OI-2C, Appendices 1 through 8 as applicable, **OR** the Auxiliary Building Operators Log to determine if the heat trace circuit is required for TRM 15.1.2 and 15.1.3. c. **IF** the heat trace circuit is required by the TRM , **THEN DETERMINE** circuit operability **PER** STP O-87-1, Borated Water Source 7 Day Operability Verification. d. **IF** dumping RCW evaporator to BAST(s), **THEN CHECK** alarm clears following the evolution.

ANNUNCIATOR COMPENSATORY ACTIONS

MONITOR the boric acid heat trace panels at least every six hours.

REFERENCES

1E-96 (61-096-E), Sh.1

DEVICE	SETPOINT	WINDOW	F-05
1-TIC-224	140° F (138 to 142° F)	L/D HX OUT TEMP HI	

POSSIBLE CAUSES

- Loss of Component Cooling
- Unbalanced Letdown flow
- High Letdown Temperature Bypass controller, 1-TIC-224, malfunction
- Letdown HX Temperature Controller, 1-TIC-223, malfunction
- Component Cooling high temperature

AUTOMATIC ACTIONS

At 145° F on 1-TIC-224:

- IX Bypass, 1-CVC-520-CV, bypasses the IXs
- Radiation Monitor Isolation, 1-CVC-521-CV, shuts

(continued)

(continued) **WINDOW** **F-05**

CONDITION	RESPONSE
1. Letdown heat exchanger outlet temperature high.	1. **PERFORM** the following: a. **IF** L/D TEMP CONTR valve, 1-CC-223-CV, is in automatic, **THEN PLACE** 1-TIC-223 in MANUAL **AND ADJUST** Letdown heat exchanger outlet temperature to less than or equal to 120° F. b. **IF** L/D TEMP CONTR valve, 1-CC-223-CV, is in manual, **THEN ADJUST** 1-TIC-223 to maintain Letdown heat exchanger outlet temperature less than or equal to 120° F. c. **IF** Letdown temperature reaches 145° F on 1-TIC-224, **THEN ENSURE** 1-CVC-520-CV bypasses the IXs and 1-CVC-521-CV shuts. d. **MONITOR** RCS for temperature and power changes due to Letdown ion exchanger temperature fluctuations.

ANNUNCIATOR COMPENSATORY ACTIONS

MONITOR Letdown heat exchanger outlet temperature at least hourly.

REFERENCES

1E-75 (61-075-B), Sh.40A

DEVICE	SETPOINT	WINDOW	F-06
1-PDIS-3821	15 PSID (14 to 16 PSID)	L/D HX CCW DIFF PRESS HI	

POSSIBLE CAUSES

High Component Cooling Water flow through Letdown heat exchanger.

AUTOMATIC ACTIONS

None

CONDITION	RESPONSE
1. Letdown heat exchanger Component Cooling Water differential pressure high.	1. **REDUCE** Component Cooling Water flow to Letdown heat exchanger to clear the annunciator.

ANNUNCIATOR COMPENSATORY ACTIONS

None

REFERENCES

1E-80 (61-080-B), Sh.16B; OM-51 (60-710-E)

DEVICE	SETPOINT	WINDOW	F-07
1-PIA-215	120 PSIG (115 to 125 PSIG)	RCP CBO PRESS HI	

POSSIBLE CAUSES

- Bleed-off line valve alignment improper:
  - RCP Bleed-off to VCT Stop, 1-CVC-203, shut
  - RCP Bleed-off Outboard Isolation, 1-CVC-505-CV, shut
  - RCP Bleed-off Inboard Isolation, 1-CVC-506-CV, shut
- SIAS signal present
- RCP seal failure

AUTOMATIC ACTIONS

RCP Controlled Bleed-off relief, 1-CVC-199-RV, will lift at 148 PSIG (144 to 148 PSIG), diverting bleed-off flow to the Reactor Coolant Drain Tank.

CONDITION	RESPONSE
1. RCP controlled bleed-off high pressure.	1. **PERFORM** the following: a. **CHECK** RCP bleed-off valve alignment. b. **CHECK** RCP seals for proper operation **PER** OI-1A, Reactor Coolant System and Pump Operations.

ANNUNCIATOR COMPENSATORY ACTIONS

MONITOR RCP controlled bleed-off header pressure at least hourly.

REFERENCES

1E-75 (61-075-B), Sh.35

DEVICE	SETPOINT	WINDOW	F-08
1-PIA-215	250 PSIG (245 to 255 PSIG)	RCP CBO PRESS HI-HI	

POSSIBLE CAUSES

- Bleed-off line valve alignment improper:
  - RCP Bleed-off to VCT Stop, 1-CVC-203, shut
  - RCP Bleed-off Outboard Isolation, 1-CVC-505-CV, shut
  - RCP Bleed-off Inboard Isolation, 1-CVC-506-CV, shut
- SIAS signal present
- RCP seal failure

AUTOMATIC ACTIONS

RCP Controlled Bleed-off relief, 1-CVC-199-RV, will lift at 148 PSIG (144 to 148 PSIG), diverting bleed-off flow to the Reactor Coolant Drain Tank.

CONDITION	RESPONSE
1. RCP controlled bleed-off high pressure.	1. **PERFORM** the following: a. **CHECK** RCP bleed-off valve alignment. b. **CHECK** RCP seals for proper operation **PER** OI-1A, Reactor Coolant System and Pump Operations.

ANNUNCIATOR COMPENSATORY ACTIONS

MONITOR RCP controlled bleed-off header pressure at least hourly.

REFERENCES

1E-75 (61-075-B), Sh.35

DEVICE	SETPOINT	WINDOW	F-09
1-PA-201	580 PSIG (568 to 592 PSIG) 420 PSIG (408 to 432 PSIG)	L/D PRESS	

POSSIBLE CAUSES

- High pressure:
  - Improper operation of Letdown Pressure controller, 1-PIC-201
  - Letdown Pressure controller, 1-PIC-201, malfunction
- Low pressure:
  - Improper operation of Letdown Pressure controller, 1-PIC-201
  - Letdown Pressure controller, 1-PIC-201, malfunction
  - Low Pressure Letdown Relief Valve, 1-CVC-354-RV, lifting
  - Letdown System secured

AUTOMATIC ACTIONS

None

(continued)

(continued) **WINDOW** **F-09**

CONDITION	RESPONSE
1. Letdown System high or low pressure.	1. **PERFORM** the following: a. **IF** LETDOWN PRESSURE controller, 1-PIC-201, malfunction is indicated, **THEN PLACE** the controller in MANUAL, **AND MAINTAIN** Letdown pressure approximately 460 PSIG. b. **IF** L/D EXC FLOW RV, 1-CVC-345-RV, has lifted, **THEN MONITOR** RCS leakrate and tail pipe temperature to ensure relief valve has reseated. c. **IF** LOW PRESS L/D RV, 1-CVC-354-RV, has lifted and fails to reseat, **THEN PERFORM** the following as necessary: • **ATTEMPT** to reseat the relief valve by mechanical agitation • **SECURE** Charging **AND** Letdown **PER** OI-2A, Chemical and Volume Control System • **MONITOR** 11 RCWRT level

ANNUNCIATOR COMPENSATORY ACTIONS

MONITOR Letdown System pressure at least hourly.

REFERENCES

1E-75 (61-075-B), Sh.37

DEVICE	SETPOINT	WINDOW	F-10
1-TIA-225	130° F (128 to 132° F)	VCT TEMP HI	

POSSIBLE CAUSES

- Improper setting on Letdown HX Temperature Controller, 1-TIC-223
- Component Cooling System high temperature
- Unbalanced Letdown flow

AUTOMATIC ACTIONS

None

CONDITION	RESPONSE
1. VCT high temperature.	1. **PERFORM** the following: a. **CHECK** Component Cooling System temperature normal. b. **ENSURE** Charging and Letdown flows are balanced. c. **IF** Letdown HX Temperature Controller malfunction is indicated, **THEN TAKE** manual control of 1-TIC-223. d. **IF** Component Cooling flow has been lost to the Letdown HX, **THEN SECURE** Letdown **PER** OI-2A, Chemical and Volume Control System. 03705

ANNUNCIATOR COMPENSATORY ACTIONS

MONITOR VCT temperature at least hourly.

REFERENCES

1E-77 (61-077-A), Sh.203; (FP 12122-03)

DEVICE	SETPOINT	WINDOW	F-11
1-LA-226	112.5 in. (110.5 to 114.5 in.) 87.5 in. (85.5 to 89.5 in.)	VCT LVL	

POSSIBLE CAUSES

- High level:
  - VCT Inlet, 1-CVC-500-CV, failed to divert to WPS
  - Letdown diverted to WPS with VCT makeup in progress
  - Level Sensing System Failure **[B0427]**
- Low level:
  - VCT automatic makeup did not initiate if aligned
  - Reactor Coolant System inventory loss with VCT makeup in manual
  - Level Sensing System Failure **[B0427]**

AUTOMATIC ACTIONS

- VCT Inlet, 1-CVC-500-CV, diverts to WPS at a VCT level of 108 inches
- VCT Outlet, 1-CVC-501-MOV, shuts and RWT Charging Pump Suction, 1-CVC-504-MOV, opens at a VCT level of 3 inches

(continued)

(continued) **WINDOW** **F-11**

CONDITION	RESPONSE
1. VCT high level.	1. **PERFORM** the following: a. **ENSURE** VCT INL, 1-CVC-500-CV, has diverted to WPS. b. **IF** VCT makeup is in progress, **THEN REDUCE** makeup rate to lower VCT level or **SECURE** makeup, as applicable.
2. VCT low level.	2. **PERFORM** the following: a. **ENSURE** VCT INL, 1-CVC-500-CV, is **NOT** diverting Letdown to WPS. b. **INITIATE** makeup to the VCT **PER** OI-2B, CVCS Boration, Dilution and Makeup Operations. c. **IF** VCT level reaches 3 inches, **THEN ENSURE** VCT OUT, 1-CVC-501-MOV, shuts and RWT CHG PP SUCT, 1-CVC-504-MOV, opens. **[B0427]** d. **IF** RCS inventory loss is suspected, **THEN IMPLEMENT** AOP-2A, Excessive Reactor Coolant Leakage.

ANNUNCIATOR COMPENSATORY ACTIONS

MONITOR VCT level at least hourly.

REFERENCES

1E-75 (61-075-C), Sh.25

DEVICE	SETPOINT	WINDOW	F-12
1-PIA-225	50 PSIG (48.5 to 51.5 PSIG) 4 PSIG (2.5 to 5.5 PSIG)	VCT PRESS	

POSSIBLE CAUSES

- High pressure:
  - Overcharging of hydrogen or nitrogen
  - Makeup operation in progress
  - VCT level in the upper operating band
- Low pressure:
  - VCT Vent, 1-CVC-513-CV, open
  - VCT level in the lower operating band

AUTOMATIC ACTIONS

None

(continued)

(continued) **WINDOW** **F-12**

NOTE
A VCT Pressure decrease without a corresponding level decrease, when the VCT vent valve is closed, is a possible indication of a level sensing failure. **[B0427]**

CONDITION	RESPONSE
1. VCT high pressure.	1. **PERFORM** the following: a. **ENSURE** VCT hydrogen or nitrogen charging is **NOT** in progress. b. **PERFORM** any of the following to reduce VCT pressure: • **DIVERT** VCT INL, 1-CVC-500-CV, to WPS to lower VCT level • **REDUCE** VCT pressure by venting VCT **PER** OI-2A, Chemical and Volume Control System. **[B0427]**
2. VCT low pressure.	2. **PERFORM** the following: a. **ENSURE** VCT VENT, 1-CVC-513-CV, is shut. b. **RAISE** VCT nitrogen or hydrogen pressure, as applicable. c. **VENT** the idle charging pump(s) **PER** OI-2A, Chemical and Volume Control System, to verify they are **NOT** gas bound. **[B0427]**

ANNUNCIATOR COMPENSATORY ACTIONS

MONITOR VCT pressure at least hourly.

REFERENCES

1E-77 (61-077-A), SH.212; (FP 12122-05)

DEVICE	SETPOINT	WINDOW	F-13
1-FIA-202	135 GPM (132 to 138 GPM)	L/D FLOW HI	

POSSIBLE CAUSES

- Improper system alignment
- Letdown Throttle Valve Controller, 1-HIC-110, malfunction
- Pressurizer level transmitter failed high
- Letdown System pipe rupture

AUTOMATIC ACTIONS

- Letdown Excess Flow Check Valve, 1-CVC-343, may shut at greater than 200 GPM

CONDITION	RESPONSE
1. Letdown high flow.	1. **PERFORM** the following: a. **PLACE** IX BYPASS, 1-CVC-520-CV, in BYP. b. **IF** LETDOWN THROTTLE VLV CONTROLLER, 1-HIC-110, malfunction is indicated, **THEN PLACE** the controller in MANUAL **AND ADJUST** Letdown flow consistent with operating charging pump(s) and Pressurizer level. c. **IF** Letdown flow is pegged high, **THEN SHUT** L/D CNTMT ISOLs, 1-CVC-515-CV and 1-CVC-516-CV, **AND MAINTAIN** Pressurizer level by running charging pump(s) as necessary.

ANNUNCIATOR COMPENSATORY ACTIONS

MONITOR Letdown System flow at least hourly.

(continued)

(continued) **WINDOW** **F-13**

REFERENCES

1E-77 (61-077-A), SH.230; (FP 12122-20)

DEVICE	SETPOINT	WINDOW	F-14
1-PDIS-204	20 PSID (19 to 21 PSID)	L/D STRN DIFF PRESS HI	

POSSIBLE CAUSES

- Letdown strainer dirty
- Letdown System high flow rate
- Letdown ion exchanger retention element failure

AUTOMATIC ACTIONS

None

CONDITION	RESPONSE
1. Letdown strainer high differential pressure.	1. **PERFORM** the following: a. **IF** alarm is due to high Letdown flow rates, **THEN TAKE** appropriate actions to reduce Letdown flow consistent with operating charging pump(s) and Pressurizer level. b. **IF** alarm occurred with normal Letdown flow **OR** during SDC with purification in service, **THEN PLACE** IX BYPASS, 1-CVC-520-CV, in BYP. (1) **DETERMINE** if a purification ion exchanger resin retention element failure has occurred by radiological surveys in the area of the basket strainer. (2) **CLEAN** the Letdown strainer as necessary **AND RETURN** the purification IXs to service **PER** OI-2D, Purification System Operation.

(continued)

(continued) **WINDOW** **F-14**

ANNUNCIATOR COMPENSATORY ACTIONS

MONITOR the Letdown strainer differential pressure at least every 6 hours.

REFERENCES

None

DEVICE	SETPOINT	WINDOW	F-15
1-PDIS-202	50 PSID (49 to 51 PSID)	PURIF FILT DIFF PRESS HI	

POSSIBLE CAUSES

- Purification filter dirty
- Letdown System high flow rate
- Excessive throttling of purification filter inlet to establish flow through Process Radiation Monitor

AUTOMATIC ACTIONS

None

CONDITION	RESPONSE
1. Purification filter high differential pressure.	1. **PERFORM** the following: a. **IF** alarm is due to high Letdown flow rates, **THEN TAKE** appropriate actions to reduce Letdown flow consistent with operating charging pump(s) and Pressurizer level. b. **IF** the Process Radiation Monitor is in service, **THEN READJUST** the Process Radiation Monitor flow **PER** OI-44, to clear the alarm. c. **IF** the purification filter inlet is full open, **THEN PLACE** the standby filter in service or **OPEN** the L/D FILT BYP, 1-CVC-124, **PER** OI-2D, Purification System Operation. d. **IF** the alarm is VALID **THEN NOTIFY** the System Engineer and **INITIATE** an IR to change the filter.

(continued)

(continued) **WINDOW** **F-15**

ANNUNCIATOR COMPENSATORY ACTIONS

MONITOR the purification filter differential pressure at least every 6 hours.

REFERENCES

None

DEVICE	SETPOINT	WINDOW	F-16
1-PDIS-203	50 PSID (48 to 52 PSID)	PURIF IX DIFF PRESS HI	

POSSIBLE CAUSES

- Plugged retention element
- Resin fouled by insolubles

AUTOMATIC ACTIONS

None

CONDITION	RESPONSE
1. Purification ion exchanger high differential pressure.	1. **PERFORM** the following: a. **IF** Letdown is in service, **THEN**: (1) **PLACE** IX BYPASS, 1-CVC-520-CV, in BYP. (2) **NOTIFY** Plant Chemistry of problem **AND REQUEST** which ion exchanger to be placed in service. (3) **PLACE** ion exchanger designated by Plant Chemistry in service **PER** OI-2D, PURIFICATION SYSTEM OPERATION.
(continued)	(continued)

(continued)

(continued) **WINDOW** **F-16**

CONDITION	RESPONSE
1. (continued)	1. (continued) b. **IF** Purification is on SDC, **THEN**: (1) **PLACE** IX BYPASS, 1-CVC-520-CV, in BYP. (2) **NOTIFY** Plant Chemistry of problem **AND REQUEST** new flow rate through ion exchanger(s). (3) **THROTTLE** SDC SUPP CVCS B/U, 1-SI-464, to new desired flowrate. (4) **PLACE** IX BYPASS, 1-CVC-520-CV, in AUTO. (5) **IF** the alarm does not clear, **THEN PLACE** IX BYPASS, 1-CVC-520-CV, in BYP. (6) **NOTIFY** Plant Chemistry of problem **AND REQUEST** which ion exchanger(s) to be placed in service. (7) **PLACE** ion exchanger designated by Plant Chemistry in service **PER** OI-2D, PURIFICATION SYSTEM OPERATION CHEMICAL ADDITION.

ANNUNCIATOR COMPENSATORY ACTIONS

MONITOR purification ion exchanger differential pressure at least every 6 hours.

REFERENCES

None

DEVICE	SETPOINT	WINDOW	F-17
1-FIA-203	0.5 GPM (0.4 to 0.6 GPM)	RAD MON FLOW LO	

POSSIBLE CAUSES

- Letdown temperature high:
  - Letdown Containment Isolation, 1-CVC-515-CV, shuts at a regenerative heat exchanger outlet temperature of 470° F
  - Radiation Monitor Isolation, 1-CVC-521-CV, shuts at a Letdown heat exchanger outlet temperature of 145° F
- Improper Letdown System alignment
- Changing number of charging pumps in operation
- Process Radiation Monitor piping flow restriction

AUTOMATIC ACTIONS

None

CONDITION	RESPONSE
1. Process Radiation Monitor low flow.	1. **PERFORM** the following: a. **CHECK** Letdown temperatures within normal operating limits. b. **CHECK** local flow indication for actual flow. c. **CHECK** for correct valve alignment. d. **RETURN** Process Radiation Monitor flows to normal **PER** OI-44, as applicable.

ANNUNCIATOR COMPENSATORY ACTIONS

MONITOR Process Radiation Monitor flows at least every 6 hours.

REFERENCES

1E-77 (61-077-A), Sh.231

DEVICE	SETPOINT	WINDOW	F-18
1-FA-210Y 1-CVC-512-CV (62X) 1-HS-210	1 GPM (0.5 to 1.5 GPM) deviation from setpoint with 1-HS-210 **NOT** in DILUTE and 1-CVC-512-CV **NOT** fully shut	**BA FLOW**	

POSSIBLE CAUSES

- Loss of operating boric acid pump
- Rising backpressure from VCT during makeup
- Boric acid line flow restriction
- Concentrated Boric Acid Flow Controller, 1-FIC-210Y, malfunction

AUTOMATIC ACTIONS

None

CONDITION	RESPONSE
1. Boric acid flow low or erratic.	1. **PERFORM** the following: a. **IF** aligned for automatic makeup, **THEN RESTORE** boric acid flow to normal. b. **IF** boric acid flow is low or erratic, **THEN PLACE** CONC BORIC ACID FLOW CONTR, 1-FIC-210Y, in MANUAL and manually control makeup. c. **IF** boric acid flow was low or erratic, **THEN MONITOR** the RCS for inadvertent boration or dilution effects. **[B0269]**

(continued)

(continued) **WINDOW** **F-18**

ANNUNCIATOR COMPENSATORY ACTIONS

- **MONITOR** boric acid flow during automatic makeup evolutions. **[B0269]**
- Other alarms to help the operator diagnose a dilution event are as follows: **[B0269]**

PANEL	WINDOW	DESCRIPTION
1C05	D-08	HI POWER TRIP
1C05	D-12	POWER LVL HI CH PRE-TRIP
1C05	D-15	POWER LVL RATE HI CH PRE-TRIP
1C05	D-33	S/D MON HI
1C05	D-40	TAVG - TREF
1C06	E-07	11A/11B COLD LEG TEMP HI
1C06	E-08	12A/12B COLD LEG TEMP HI
1C07	F-18	BA FLOW
1C07	F-22	DEMIN WTR FLOW
1C07	F-25	11 BA PP DISCH PRESS LO
1C07	F-37	12 BA PP DISCH PRESS LO

REFERENCES

1E-75 (61-075-C), Sh.46

DEVICE	SETPOINT	WINDOW	F-19
None	None	SPARE	

POSSIBLE CAUSES

None

AUTOMATIC ACTIONS

None

CONDITION	RESPONSE
1. None.	1. None.

ANNUNCIATOR COMPENSATORY ACTIONS

None

REFERENCES

None

DEVICE	SETPOINT	WINDOW	F-20 [B0121]
1-IA-2085-CV (74X)	1-IA-2085-CV shut	CNTMT IA ISOL 1-IA-2085-CV CLOSED	

POSSIBLE CAUSES

- Instrument Air header pressure less than 75 PSIG downstream of 1-IA-2085-CV
- Containment Instrument Air Isolation, 1-IA-2085-CV, shut either manually or by keyswitch 1-HS-2085

AUTOMATIC ACTIONS

> **NOTE**
> Auxiliary Spray isolation, 1-CVC-517-CV, and Loop Charging Isolations, 1-CVC-518-CV and 1-CVC-519-CV, are supplied instrument air upstream of 1-IA-2085-CV and are not affected by its closure.

- Letdown Containment Isolations, 1-CVC-515-CV and 1-CVC-516-CV, shut
- Containment Spray Header isolations, 1-SI-4150-CV and 1-SI-4151-CV, open
- Pressurizer Spray valves, 1-RC-100E-CV and 1-RC-100F-CV, shut
- Containment Purge valves, 1-CP-1410-CV and 1-CP-1412-CV, shut
- Plant Air to Containment Isolation, 1-PA-2035-CV, shut

(continued)

(continued)

WINDOW **F-20 [B0121]**

CONDITION	RESPONSE
1. Containment Instrument Air, 1-IA-2085-CV, shut.	1. **PERFORM** the following: a. **REFER** to AOP-7D, Loss Of Instrument Air. b. **IF** Letdown is lost, **THEN MATCH** Letdown Containment Isolation handswitches with current valve positions. c. **MAINTAIN** Pressurizer level within 15 inches of programmed level, **NOT** to exceed 225 inches, by manual control of Charging System. d. **MANUALLY** operate Pressurizer heaters to maintain RCS pressure 2225 to 2275 PSIA. e. **IF** Pressurizer spray is required, **THEN INITIATE** auxiliary spray, as applicable. f. **IF** containment purge was in progress, **THEN SECURE** the purge alignment. g. **LOG** the initiation of Charging, Letdown and auxiliary spray in the Transient Tracking Log as applicable. h. **EVALUATE** the effect of loosing Plant Air to the containment Plant Air stations.

ANNUNCIATOR COMPENSATORY ACTIONS

- **MONITOR** Containment Instrument Air isolation, 1-IA-2085-CV, position at least every 6 hours.

REFERENCES

1E-82 (61-082-B), Sh.7; OM-53 (60-712-E); OM-65 (60-723-E); OM-72 (60-729-E); OM-74 (60-731-E); OM-479 (60-746-E)

DEVICE **SETPOINT** **WINDOW** **F-21**

	Alert	High
1-RY-202-1 (Log)	5E5 CPM	1E6 CPM (Gross)
1-RY-202-2 (Linear)	0.8 CPM	1.0 CPM (I-135)

RAD MON LVL HI

POSSIBLE CAUSES

- Fuel failure
- Crud burst
- Selected isotope high (Iodine 135)
- High radiation source near detector

AUTOMATIC ACTIONS

None

(continued)

(continued) **WINDOW** **F-21**

CONDITION	RESPONSE
1. Radiation monitor high level.	1. **PERFORM** the following: a. **DETERMINE** the RMS alarm validity by checking: • Green FAIL light on the local panel under 1C07 for either the Linear Ratemeter (Selected Isotope) or Log Ratemeter (Gross Activity) is illuminated • Selected scale on the Linear Ratemeter drawer is positioned where indication is greater than 0.1 **NOTE** RI-202 reads out in Counts per Minute, not μCi/gm as used in the Tech Specs. b. **REQUEST** Plant Chemistry to take samples to validate RMS readings. c. **IF** RMS readings are valid, **THEN IMPLEMENT** AOP-6A, High Reactor Coolant Activity.

ANNUNCIATOR COMPENSATORY ACTIONS

IF Rad Monitor is OOS,
THEN NOTIFY Plant Chemistry to sample the RCS per CP-204.

IF Alarm is OOS,
THEN MONITOR Rad Monitor Once per Shift.

REFERENCES

(FP 12122-38)

DEVICE	SETPOINT	WINDOW	F-22
1-FA-210X 1-CVC-512-CV (62X) 1-HS-210	10 GPM (8 to 12 GPM) deviation from setpoint with 1-HS-210 **NOT** in BORATE and 1-CVC-512-CV **NOT** fully shut	**DEMIN WTR FLOW**	

POSSIBLE CAUSES

- Loss of operating reactor coolant makeup pump
- Rising backpressure from VCT during makeup
- Makeup Water Flow Controller, 1-FIC-210X, malfunction

AUTOMATIC ACTIONS

None

CONDITION	RESPONSE
1. Reactor coolant makeup water flow low or erratic.	1. **PERFORM** the following: a. **IF** aligned for automatic makeup, **THEN RESTORE** reactor coolant makeup water flow to normal. b. **IF** reactor coolant makeup water flow is low or erratic, **THEN PLACE** MAKEUP WTR FLOW CONTR, 1-FIC-210X, in MANUAL and manually control makeup. c. **IF** reactor coolant makeup water flow was low or erratic, **THEN MONITOR** the RCS for inadvertent boration or dilution effects. **[B0269]**

(continued)

(continued) **WINDOW** **F-22**

ANNUNCIATOR COMPENSATORY ACTIONS

- **MONITOR** reactor coolant makeup water flow during automatic makeup evolutions. **[B0269]**
- Other alarms to help the operator diagnose a dilution event are as follows: **[B0269]**

PANEL	WINDOW	DESCRIPTION
1C05	D-08	HI POWER TRIP
1C05	D-12	POWER LVL HI CH PRE-TRIP
1C05	D-15	POWER LVL RATE HI CH PRE-TRIP
1C05	D-33	S/D MON HI
1C05	D-40	TAVG - TREF
1C06	E-07	11A/11B COLD LEG TEMP HI
1C06	E-08	12A/12B COLD LEG TEMP HI
1C07	F-18	BA FLOW
1C07	F-22	DEMIN WTR FLOW
1C07	F-25	11 BA PP DISCH PRESS LO
1C07	F-37	12 BA PP DISCH PRESS LO

REFERENCES

1E-75 (61-075-C), Sh.46

DEVICE	SETPOINT	WINDOW	F-23
1-LS-207 1-LS-209	103.75 in. (102.75 to 104.75 in.)	BAST(S) LVL LO	

POSSIBLE CAUSES

- Excessive use
- Improper BAST recirculation
- Improper valve alignment
- Boric Acid Pumps Common Discharge Relief Valve, 1-CVC-157-RV, leaking by (11 BAST transfer to 12 BAST only)

AUTOMATIC ACTIONS

None

CONDITION	RESPONSE
1. 11 or 12 BAST(s) low level.	1. **PERFORM** the following: a. **IF** a BAST in recirculation, **THEN SECURE** recirculation and **CHECK** valve alignment. b. **IF** alarm is **NOT** anticipated due to makeup or borated water transfer evolution, **THEN CHECK** system alignment. c. **IF** required, **THEN MAKEUP** to the affected BAST **PER** OI-2C, Concentrated Boric Acid System Operations. d. **REFER** to TRM 15.1.2 and 15.1.3 for BAST level limitations.

ANNUNCIATOR COMPENSATORY ACTIONS

MONITOR 11 and 12 BASTs level at least hourly.

REFERENCES

1E-75 (61-075-B), Sh.26

DEVICE	SETPOINT	WINDOW	F-24
1-HS-2516A	1-HS-2516A in CLOSE	L/D LINE CNTMT ISOL CV LOCAL AT 1C43	

POSSIBLE CAUSES

Letdown Containment Isolation handswitch, 1-HS-2516A, in CLOSE at 1C43.

AUTOMATIC ACTIONS

Removes control of Letdown Containment Isolation, 1-CVC-516-CV, from the Control Room.

CONDITION	RESPONSE
1. Handswitch 1-HS-2516A in CLOSE at 1C43.	1. **IF** Letdown was isolated, **THEN PERFORM** the following: a. **SHUT** L/D CNTMT ISOL, 1-CVC-515-CV. b. **OPERATE** charging pumps as necessary to maintain Pressurizer level. c. **IF NOT** required to be in CLOSE at 1C43, **THEN RETURN** 1-HS-2516A to NORMAL. d. **RESTORE** Charging and Letdown **PER** OI-2A, Chemical and Volume Control System.

ANNUNCIATOR COMPENSATORY ACTIONS

IF Letdown is lost due to Letdown Containment Isolation, 1-CVC-516-CV, closure, **THEN CHECK** L/D CNTMT ISOL handswitch, 1-HS-2516A, position on 1C43.

REFERENCES

1E-75 (61-075-B), Sh.41

DEVICE	SETPOINT	WINDOW	F-25
1-HS-226	BA PP SEL SW selected 11 BA PP **AND**	**11 BA PP AUTO M/U START FAIL**	
1-LIC-226	VCT Level less than 90 in.(88 to 92) **AND**		
1-PS-206	Pump discharge pressure less than 60 PSIG (55 to 65 PSIG) AND		
1-HS-210	Mode Selector Switch is in AUTO		

POSSIBLE CAUSES

See alarm setpoint section.

AUTOMATIC ACTIONS

None

NOTE

IF 11 Boric Acid Pump is used for VCT makeup and sufficient discharge pressure is **NOT** developed to reset the low pressure switch,
THEN the VCT level must be raised to the high level setpoint (104 in.) to clear the alarm.

CONDITION	RESPONSE
1. Boric acid pump low pressure.	1. **PERFORM** the following: a. **IF** CVCS makeup is in the manual mode of operation, **THEN RESTORE** VCT level to greater than 90 inches as soon as possible. b. **IF** 11 Boric Acid Pump fails to start or develop sufficient discharge pressure, **THEN ATTEMPT** to use 12 Boric Acid Pump for makeup operations. c. **IF** boric acid flow was low or erratic, **THEN MONITOR** the RCS for inadvertent boration or dilution. **[B0269]**

(continued)

(continued) **WINDOW** **F-25**

ANNUNCIATOR COMPENSATORY ACTIONS

- **MONITOR** 11 Boric Acid Pump operation during makeup evolutions and VCT level at least hourly. **[B0269]**
- Other alarms to help the operator diagnose a dilution event are as follows: **[B0269]**

PANEL	WINDOW	DESCRIPTION
1C05	D-08	HI POWER TRIP
1C05	D-12	POWER LVL HI CH PRE-TRIP
1C05	D-15	POWER LVL RATE HI CH PRE-TRIP
1C05	D-33	S/D MON HI
1C05	D-40	TAVG - TREF
1C06	E-07	11A/11B COLD LEG TEMP HI
1C06	E-08	12A/12B COLD LEG TEMP HI
1C07	F-18	BA FLOW
1C07	F-22	DEMIN WTR FLOW
1C07	F-25	11 BA PP DISCH PRESS LO
1C07	F-37	12 BA PP DISCH PRESS LO

REFERENCES

1E-75 (61-075-C), Sh.25C

DEVICE	SETPOINT	WINDOW	F-26
Time Delay Relays: 2/SA6, 2/226X	N/A	**11 BA PP** **•SIAS BLOCKED** **•AUTO START**	

POSSIBLE CAUSES

- 11 Boric Acid Pump handswitch, 1-HS-226X, in PULL TO LOCK for greater than 5 seconds
- 11 Boric Acid Pump handswitch, 1-HS-226X, in STOP for greater than 5 seconds
- Any start signal to 11 Boric Acid Pump for greater than 1 second and the pump breaker does not close

AUTOMATIC ACTIONS

None

CONDITION	RESPONSE
1. 11 Boric Acid Pump automatic start failure or out of service.	1. **PERFORM** the following: a. **PLACE** 12 Boric Acid Pump in service for makeup operations by selecting 12 BAP with BA PP SEL SW, 1-HS-226. b. **NOTIFY** Electric Shop to check breaker 52-11406 for proper operation. c. **REFER** to TRM 15.1.2. and 15.1.3 for boric acid pump operability requirements.

ANNUNCIATOR COMPENSATORY ACTIONS

MONITOR 11 Boric Acid Pump for proper operation during automatic starting evolutions.

REFERENCES

1E-75 (61-075-C), Sh.25C

DEVICE	SETPOINT	WINDOW	F-27
None	None	SPARE	

POSSIBLE CAUSES

None

AUTOMATIC ACTIONS

None

CONDITION	RESPONSE
1. None.	1. None.

ANNUNCIATOR COMPENSATORY ACTIONS

None

REFERENCES

None

DEVICE	SETPOINT	WINDOW	F-28
1-HS-2505A	1-HS-2505A in CLOSE	RCP CBO CNTMT ISOL CV LOCAL AT 1C43	

POSSIBLE CAUSES

RCP Bleed-off Isolation handswitch, 1-HS-2505A, in CLOSE at 1C43.

AUTOMATIC ACTIONS

- Removes control of RCP Bleed-off Outboard Isolation, 1-CVC-505-CV, from the Control Room
- RCP bleed-off will be aligned to the Reactor Coolant Drain Tank via RCP Bleed-off Relief Isolation, 1-CVC-507-CV, and allowing 1-CVC-199-RV to lift at 148 PSIG (144 to 148 PSIG)

CONDITION	RESPONSE
1. Handswitch 1-HS-2505A in CLOSE at 1C43.	1. **PERFORM** the following: a. **IF NOT** required to be in CLOSE at 1C43, **THEN RETURN** 1-HS-2505A to NORMAL. b. **REESTABLISH** RCP Bleed-off flow to the VCT. c. **MONITOR** Reactor Coolant Pump seal performance for normal operation.

ANNUNCIATOR COMPENSATORY ACTIONS

CHECK handswitch 1-HS-2505A in NORMAL at least once a shift when not required to be operated from 1C43.

REFERENCES

1E-75 (61-075-B), Sh.44

DEVICE	SETPOINT	WINDOW	F-29
1-TIC-206 (Low) 1-TIC-207 (High)	135° F (130 to 140° F)(Low) 165° F (160 to 170° F)(High)	**11 BAST TEMP**	

POSSIBLE CAUSES

- Heater malfunction
- Heaters turned off
- Batching to BAST at too high or low a temperature

AUTOMATIC ACTIONS

None

CONDITION	RESPONSE
1. 11 BAST high or low temperature.	1. **PERFORM** the following: a. **CHECK** 11 BAST Temperature Controller(s) for proper operation. b. **IF** temperature controller(s) malfunction is indicated, **THEN OPERATE** the heaters manually as necessary. c. **REFER** to TRM 15.1.2 and 15.1.3 for operable BAST temperature ranges.

ANNUNCIATOR COMPENSATORY ACTIONS

MONITOR 11 BAST temperature at least every 6 hours.

REFERENCES

1E-75 (61-075-B), Sh.26

DEVICE	SETPOINT	WINDOW	F-30
1-LIA-206	136 in. (134 to 138 in.) 10 in. (8 to 12 in.)	**11 BAST** **•LVL HI** **•LVL LO-LO**	

POSSIBLE CAUSES

- Improper recirculation alignment
- Improper valve alignment
- Local sample valve open
- Excessive batching
- Excessive use
- Condensed fluid in overflow loop seal

AUTOMATIC ACTIONS

None

CONDITION	RESPONSE
1. 11 BAST level high or low.	1. **PERFORM** the following: a. **IF** in recirculation, **THEN SECURE** recirculation and **CHECK** valve alignment. b. **IF** alarm is **NOT** anticipated due to makeup or borated water transfer evolution, **THEN CHECK** system alignment. c. **IF** required, **THEN MAKEUP** to the BAST **PER** OI-2C, CONCENTRATED BORIC ACID SYSTEM OPERATIONS. d. **REFER** to TRM 15.1.2 and 15.1.3 for minimum operable BAST levels.

(continued)

(continued) **WINDOW** **F-30**

ANNUNCIATOR COMPENSATORY ACTIONS

MONITOR 11 BAST level during recirculation, makeup and batching evolutions.

REFERENCES

1E-75 (61-075-B), Sh.26

DEVICE	SETPOINT	WINDOW	F-31
1-LA-206	100 in. (LIA-206 indication) (122.75 in. actual)	**11 BAST LVL LO**	

POSSIBLE CAUSES

- Excessive use
- Improper recirculation alignment
- Improper valve alignment
- Local sample valve open

AUTOMATIC ACTIONS

None

CONDITION	RESPONSE
1. 11 BAST low level.	1. **PERFORM** the following: a. IF in recirculation, THEN **SECURE** recirculation and **CHECK** valve alignment. b. IF alarm is NOT anticipated due to makeup or borated water transfer evolution, THEN **CHECK** system alignment. c. IF required, THEN **MAKEUP** to the BAST **PER** OI-2C, Concentrated Boric Acid System Operations. d. **REFER** to TRM 15.1.2 and 15.1.3 for borated water source limitations.

ANNUNCIATOR COMPENSATORY ACTIONS

MONITOR 11 BAST level during recirculation and makeup evolutions.

REFERENCES

None

DEVICE	SETPOINT	WINDOW	F-32
None	None	SPARE	

POSSIBLE CAUSES

None

AUTOMATIC ACTIONS

None

CONDITION	RESPONSE
1. None.	1. None.

ANNUNCIATOR COMPENSATORY ACTIONS

None

REFERENCES

None

DEVICE	SETPOINT	WINDOW	F-33
1-TIC-208 (Low) 1-TIC-209 (High)	135° F (130 to 140° F)(Low) 165° F (160 to 170° F)(High)	**12 BAST TEMP**	

POSSIBLE CAUSES

- Heater malfunction
- Heaters turned off
- Batching to BAST at too high or low a temperature

AUTOMATIC ACTIONS

None

CONDITION	RESPONSE
1. 12 BAST high or low temperature.	1. **PERFORM** the following: a. **CHECK** 12 BAST Temperature Controller(s) for proper operation. b. **IF** temperature controller(s) malfunction is indicated, **THEN OPERATE** the heaters manually as necessary. c. **REFER** to TRM 15.1.2 and 15.1.3 for operable BAST temperature ranges.

ANNUNCIATOR COMPENSATORY ACTIONS

MONITOR 12 BAST temperature at least every 6 hours.

REFERENCES

1E-75 (61-075-B), Sh.26

DEVICE	SETPOINT	WINDOW	F-34
1-LIA-208	136 in. (134 to 138 in.) 10 in. (8 to 12 in.)	**12 BAST** **•LVL HI** **•LVL LO-LO**	

POSSIBLE CAUSES

- Improper recirculation alignment
- Improper valve alignment
- Local sample valve open
- Excessive batching
- Excessive use
- Condensed fluid in overflow loop seal

AUTOMATIC ACTIONS

None

CONDITION	RESPONSE
1. 12 BAST level high or low.	1. **PERFORM** the following: a. **IF** in recirculation, **THEN SECURE** recirculation and **CHECK** valve alignment. b. **IF** alarm is **NOT** anticipated due to makeup or borated water transfer evolution, **THEN CHECK** system alignment. c. **IF** required, **THEN MAKEUP** to the BAST **PER** OI-2C, CONCENTRATED BORIC ACID SYSTEM OPERATIONS. d. **REFER** to TRM 15.1.2 and 15.1.3 for minimum operable BAST levels.

(continued)

(continued) **WINDOW** **F-34**

ANNUNCIATOR COMPENSATORY ACTIONS

MONITOR 12 BAST level during recirculation, makeup and batching evolutions.

REFERENCES

1E-75 (61-075-B), Sh.26

DEVICE	SETPOINT	WINDOW	F-35
1-LA-208	100 in. (LIA-208 indication) (122.75 in. actual)	12 BAST LVL LO	

POSSIBLE CAUSES

- Excessive use
- Improper recirculation alignment
- Improper valve alignment
- Local sample valve open

AUTOMATIC ACTIONS

None

CONDITION	RESPONSE
1. 12 BAST low level.	1. **PERFORM** the following: a. **IF** in recirculation, **THEN SECURE** recirculation **AND CHECK** valve alignment. b. **IF** alarm is **NOT** anticipated due to makeup or borated water transfer evolution, **THEN CHECK** system alignment. c. **IF** required, **THEN MAKEUP** to the BAST **PER** OI-2C, Concentrated Boric Acid System Operations. d. **REFER** to TRM 15.1.2 and 15.1.3 for borated water source limitations.

ANNUNCIATOR COMPENSATORY ACTIONS

MONITOR 12 BAST level during recirculation and makeup evolutions.

REFERENCES

None

DEVICE	SETPOINT	WINDOW	F-36
None	None	SPARE	

POSSIBLE CAUSES

None

AUTOMATIC ACTIONS

None

CONDITION	RESPONSE
1. None.	1. None.

ANNUNCIATOR COMPENSATORY ACTIONS

None

REFERENCES

None

DEVICE	SETPOINT	WINDOW	F-37
1-HS-226	BA PP SEL SW selected to 12 BA PP **AND**	**12 BA PP AUTO M/U START FAIL**	
1-LIC-226	VCT Level less than 90 in. (88 to 92 in) **AND**		
1-PS-208	Pump discharge pressure less than 60 PSIG (55 to 65 PSIG) AND		
1-HS-210	Mode Selector Switch is in AUTO		

POSSIBLE CAUSES

See alarm setpoint section.

AUTOMATIC ACTIONS

None

NOTE
IF 12 Boric Acid Pump is used for VCT makeup **AND** sufficient discharge pressure is **NOT** developed to reset the low pressure switch,
THEN the VCT level must be raised to the high level setpoint (104 in.) to clear the alarm.

CONDITION	RESPONSE
1. Boric acid pump low pressure.	1. **PERFORM** the following: a. **IF** CVCS makeup is in the manual mode of operation, **THEN RESTORE** VCT level to greater than 90 inches as soon as possible. b. **IF** 12 Boric Acid Pump fails to start or develop sufficient discharge pressure, **THEN ATTEMPT** to use 11 Boric Acid Pump for makeup operations. c. **IF** boric acid flow was low or erratic, **THEN MONITOR** the RCS for inadvertent boration or dilution. **[B0269]**

(continued)

(continued) **WINDOW** **F-37**

ANNUNCIATOR COMPENSATORY ACTIONS

- **MONITOR** 12 Boric Acid Pump operation during makeup evolutions **AND** VCT level at least hourly. **[B0269]**
- Other alarms to help the operator diagnose a dilution event are as follows: **[B0269]**

PANEL	WINDOW	DESCRIPTION
1C05	D-08	HI POWER TRIP
1C05	D-12	POWER LVL HI CH PRE-TRIP
1C05	D-15	POWER LVL RATE HI CH PRE-TRIP
1C05	D-33	S/D MON HI
1C05	D-40	TAVG - TREF
1C06	E-07	11A/11B COLD LEG TEMP HI
1C06	E-08	12A/12B COLD LEG TEMP HI
1C07	F-18	BA FLOW
1C07	F-22	DEMIN WTR FLOW
1C07	F-25	11 BA PP DISCH PRESS LO
1C07	F-37	12 BA PP DISCH PRESS LO

REFERENCES

1E-75 (61-075-C), Sh.25

DEVICE	SETPOINT	WINDOW	F-38
Time Delay Relays: 2/SB6, 2/226Y	N/A	12 BA PP •SIAS BLOCKED •AUTO START	

POSSIBLE CAUSES

- 12 Boric Acid Pump handswitch, 1-HS-226Y, in PULL TO LOCK for greater than 5 seconds
- 12 Boric Acid Pump handswitch, 1-HS-226Y, in STOP for greater than 5 seconds
- Any start signal to 12 Boric Acid Pump for greater than 1 second and the pump breaker does not close

AUTOMATIC ACTIONS

None

CONDITION	RESPONSE
1. 12 Boric Acid Pump automatic start failure or out of service.	1. **PERFORM** the following: a. **PLACE** 11 Boric Acid Pump in service for makeup operations. b. **NOTIFY** Electric Shop to check breaker 52-10406 for proper operation. c. **REFER** to TRM 15.1.2 and 15.1.3 for boric acid pump operability requirements.

ANNUNCIATOR COMPENSATORY ACTIONS

MONITOR 12 Boric Acid Pump for proper operation during automatic starting evolutions.

REFERENCES

1E-75 (61-075-C), Sh.25

DEVICE	SETPOINT	WINDOW	F-39
None	None	SPARE	

POSSIBLE CAUSES

None

AUTOMATIC ACTIONS

None

CONDITION	RESPONSE
1. None.	1. None.

ANNUNCIATOR COMPENSATORY ACTIONS

None

REFERENCES

None

DEVICE	SETPOINT	WINDOW	F-40
1-PDIS-2530	35 PSID (34 to 36 PSID)	RCMU PPS DISCH FILT DIFF PRESS HI	

POSSIBLE CAUSES

Dirty filter elements.

AUTOMATIC ACTIONS

None

CONDITION	RESPONSE
1. RCMU Pumps discharge filter high differential pressure.	1. **IF** continued system operation is required, **THEN** with Plant Chemistry concurrence, **OPEN** RCMU FILTER BYP, 1-CVC-317.

ANNUNCIATOR COMPENSATORY ACTIONS

MONITOR RCMU pumps discharge filter differential pressure at least every 6 hours when in operation.

REFERENCES

None

DEVICE	SETPOINT	WINDOW	F-41
1-HS-224X 2/SA 611 (TDPU) 52-1115 POS SW	N/A	**11 CHG PP** **•SIAS BLOCKED** **•AUTO START**	

POSSIBLE CAUSES

- 11 Charging Pump handswitch, 1-HS-224X, in PULL TO LOCK
- Any start signal to 11 Charging Pump for 1 second and the pump breaker does not close
- 11 Charging Pump breaker, 52-1115, not racked in

AUTOMATIC ACTIONS

None

CONDITION	RESPONSE
1. 11 Charging Pump automatic start failure or out of service.	1. **PERFORM** the following: a. **IF** 11 Charging Pump does **NOT** start, **THEN START** another charging pump as applicable. b. **IF** 11 Charging Pump is out of service, **THEN REFER** to TRM 15.1.2 and 15.1.3 for charging pump availability requirements.

ANNUNCIATOR COMPENSATORY ACTIONS

MONITOR 11 Charging Pump performance during pump starting evolutions.

REFERENCES

1E-75 (61-075-D), Sh.23

DEVICE	SETPOINT	WINDOW	F-42
1-HS-224Y 2/SB 612 (TDPU) 52-1415 POS SW	N/A	**12 CHG PP** **• SIAS BLOCKED** **• AUTO START**	

POSSIBLE CAUSES

- 12 Charging Pump handswitch, 1-HS-224Y, in PULL TO LOCK
- Any start signal to 12 Charging Pump for 1 second and the pump breaker does not close
- 12 Charging Pump breaker, 52-1415, not racked in

AUTOMATIC ACTIONS

None

CONDITION	RESPONSE
1. 12 Charging Pump automatic start failure or out of service.	1. **PERFORM** the following: a. **IF** 12 Charging Pump does **NOT** start, **THEN START** another charging pump as applicable. b. **IF** 12 Charging Pump is out of service, **THEN REFER** to TRM 15.1.2 and 15.1.3 for charging pump availability requirements.

ANNUNCIATOR COMPENSATORY ACTIONS

MONITOR 12 Charging Pump performance during pump starting evolutions.

REFERENCES

1E-75 (61-075-C), Sh.23A

DEVICE	SETPOINT	WINDOW	F-43
1-HS-224Z 2/SA 613 (TDPU) 2/SB 613 (TDPU)	N/A	**13 CHG PP** **•SIAS BLOCKED** **•AUTO START**	

POSSIBLE CAUSES

- 13 Charging Pump handswitch, 1-HS-224Z, in PULL TO LOCK
- Any start signal to 13 Charging Pump for 1 second and the pump breaker does not close

AUTOMATIC ACTIONS

None

CONDITION	RESPONSE
1. 13 Charging Pump automatic start failure or out of service.	1. **PERFORM** the following: a. **IF** 13 Charging Pump does **NOT** start, **THEN START** another charging pump as applicable. b. **IF** 13 Charging Pump is out of service, **THEN REFER** to TRM 15.1.2 and 15.1.3 for charging pump availability requirements.

ANNUNCIATOR COMPENSATORY ACTIONS

MONITOR 13 Charging Pump performance during pump starting evolutions.

REFERENCES

1E-75 (61-075-C), Sh.23B, 23C, 23D

DEVICE	SETPOINT	WINDOW	F-44
52-1104 52-1404 89-1104 89-1404 89-1104 KS 89-1404 KS 89-1104A 89-1404A 89-1104A KS 89-1404A KS	N/A	**13 CHG PP BKR L/U IMPR**	

POSSIBLE CAUSES

Breaker or disconnect alignment improper.

AUTOMATIC ACTIONS

Either disconnect, 89-1104A or 89-1404A, will cause alarm when unlocked.

CONDITION	RESPONSE
1. 13 Charging Pump electrical alignment improper.	1. **PERFORM** the following: a. **PLACE** 13 CHG PP handswitch, 1-HS-224Z, in PULL TO LOCK and **CHECK** electrical alignment. b. **CHECK** disconnects 89-1104A and 89-1404A locked in their proper positions. c. **IF** 13 Charging Pump power supply is being changed, **THEN CHECK** annunciator clear following completion of transfer.

ANNUNCIATOR COMPENSATORY ACTIONS

CHECK 13 Charging Pump electrical alignment correct when not in operation at least every 6 hours.

REFERENCES

1E-75 (61-075-C), Shs.23B, 23C, 23D; (61-075-B), Shs.23x10, 23F

DEVICE	SETPOINT	WINDOW	F-45
1-FIA-212 1-PIA-212	25 GPM (22 to 28 GPM) 2000 PSIG (1950 to 2050 PSIG)	CHG HDR •FLOW LO •PRESS LO	

POSSIBLE CAUSES

- Loss of charging pump(s): **[B0427]**
  - Backup Charging Pump Select switch in wrong position for desired pump
  - Low charging pump suction pressure trip
  - Charging pump motor overload
  - Engineered Safety Features load shed
- Charging pump(s) discharge relief valve lifting **[B0427]**
- Plant cooldown and depressurization
- Charging pump(s) gas bound **[B0427]**
- Charging header pipe rupture
- Failed/Degraded Discharge Desurger

AUTOMATIC ACTIONS

None

(continued)

(continued) **WINDOW** **F-45**

CONDITION	RESPONSE
1. Charging is lost.	1. **PERFORM** the following: a. **IF** available, **THEN START** another charging pump. b. **IF** Letdown is in service **AND** Charging can **NOT** be reestablished, **THEN SECURE** Letdown. c. **IF** Charging can **NOT** be reestablished, **THEN ENSURE** the Zinc Additon Skid is secured **PER** OI-2E. d. **IF** charging pump(s) are gas bound, **THEN VENT** pump(s) **PER** Venting Charging Pump Suction Desurger and Fluid Cylinder for PE 1-41-11-O-D section of OI-2A, Chemical and Volume Control System. **[B0427]** e. **IF** charging header pipe rupture is suspected, **THEN IMPLEMENT** AOP-2A, Excessive Reactor Coolant Leakage. f. **REFER** to TRM 15.1.2 and 15.1.3 for charging pump availability requirements.

ANNUNCIATOR COMPENSATORY ACTIONS

MONITOR Charging System operation at least hourly.

REFERENCES

1E-75 (61-075-C), Sh.23B

DEVICE	SETPOINT	WINDOW	F-46
1-LC-227 (63X)	3 in. (2 to 4 in.)	CHG PP SUCT FROM RWT	

POSSIBLE CAUSES

- Low-Low VCT level
- 1-LC-227 malfunction

AUTOMATIC ACTIONS

- RWT Charging Pump Suction, 1-CVC-504-MOV, opens
- VCT Outlet, 1-CVC-501-MOV, shuts

NOTE
Shifting charging pump suction from the VCT to the RWT while at power will cause a rapid reactor shutdown due to boration.

CONDITION	RESPONSE
1. Volume Control Tank low-low level.	1. **PERFORM** the following: **[B0427]** a. **ENSURE** RWT CHG PP SUCT, 1-CVC-504-MOV, open. b. **ENSURE** VCT OUT, 1-CVC-501-MOV, shut. c. IF necessary, THEN **MAKEUP** to the VCT **PER** OI-2B, CVCS Boration, Dilution and Makeup Operations.

ANNUNCIATOR COMPENSATORY ACTIONS

MONITOR VCT level at least hourly.

REFERENCES

1E-75 (61-075-C), Sh.31, 32; (FP 12122-25)

DEVICE	SETPOINT	WINDOW	F-47
1-LIA-233X 1-LIA-233Y 1-LIA-233Z	1.5 in. (1.0 to 2.0 in.) below the half full point	CHG PP(S) OIL LVL LO	

POSSIBLE CAUSES

Leak in oil system.

AUTOMATIC ACTIONS

None

CONDITION	RESPONSE
1. Charging pump(s) oil level low.	1. **PERFORM** the following: a. **DETERMINE** which charging pump(s) has the low oil level condition. b. **PLACE** another charging pump in service as applicable. c. **IF** oil is required, **THEN ENSURE** the applicable charging pump(s) are secured prior to adding oil.

ANNUNCIATOR COMPENSATORY ACTIONS

MONITOR charging pumps oil level at least every 6 hours.

REFERENCES

1E-75 (61-075-D), Sh.23; (61-075-C), Shs.23A, 23D

DEVICE	SETPOINT	WINDOW	F-48
1-LS-235X 1-LS-235Y 1-LS-235Z	9.5 in. (8.5 to 10.5 in.) from bottom of tank (with pump running or breaker racked out)	**CHG PP(S) PACKING COOLANT LVL LO**	

POSSIBLE CAUSES

- Excessive packing coolant system leakage
- Evaporation

AUTOMATIC ACTIONS

Annunciator clears when applicable charging pump(s) are secured.

CONDITION	RESPONSE
1. Charging pump Seal Water Tank low level.	1. **PERFORM** the following: a. **DETERMINE** which charging pump(s) has the low Seal Water Tank level. b. **IF** unable to refill the Seal Water Tank, **THEN SHIFT** to another charging pump. c. **IF** Charging is required, **THEN** the affected charging pump(s) may be used for emergencies until the Seal Water Tank is refilled. d. **FILL** the applicable charging pump(s) Seal Water Tank with demineralized water. e. **IF** alarm is due to an OOS charging pump, **THEN MONITOR** operating pump(s) Seal Water Tank level at least every 6 hours.

(continued)

(continued) **WINDOW** **F-48**

ANNUNCIATOR COMPENSATORY ACTIONS

MONITOR charging pumps Seal Water Tank level at least every 6 hours.

REFERENCES

1E-75 (61-075-D), Sh.23; (61-075-C), Shs.23A, 23C

CALVERT CLIFFS NUCLEAR POWER PLANT

UNIT ONE

1C08-ALM

ESFAS 11 ALARM MANUAL

REVISION 34

Safety Related

REFERRAL USE

Approval Authority: M. V. Sukow 7/17/00
signature/date

Effective Date: 7/20/00

LIST OF EFFECTIVE PAGES

PAGE NUMBER	REVISION
1 - 47	34

PROCEDURE ALTERATIONS

PAGE NUMBER	REVISION/CHANGE
4, 28, 30, 32, 34	34/00
8	34/01
44	34/02

1.0 PURPOSE

A. This Alarm Manual provides information to the Operator for diagnosis of alarm conditions and recommended actions to mitigate the consequences of the alarm condition.

B. This Alarm Manual provides pre-planned compensatory actions that should be considered for implementation when an alarm is not available.

2.0 APPLICABILITY/SCOPE

This Alarm Manual addresses Control Room annunciator panel 1C08.

3.0 REFERENCES AND DEFINITIONS

3.1 DEVELOPMENTAL REFERENCES

A. NO-1-201, Calvert Cliffs Operating Manual

B. NO-1-206, Alarm Annunciator Control

C. Additional references are listed in the response for each alarm window.

3.2 PERFORMANCE REFERENCES

A. 1C07A-ALM, Chemical & Volume Control Status Panel Alarm Manual

B. AOP-6D, Fuel Handling Incident

C. AOP-7I, Loss of 4KV, 480 Volt or 208/120 Volt Instrument Bus Power

D. RM-1-101, Regulatory Reporting

E. EOP-0, Post-Trip Immediate Actions

F. OI-2A, Chemical and Volume Control System

G. OI-34, Engineered Safety Features Actuation System

H. Technical Specifications

I. EOP Attchments

3.3 DEFINITIONS

None

4.0 PREREQUISITES

Specific alarm received or not available.

5.0 PRECAUTIONS

A. Inappropriate actions may result if operational decisions are based solely on single alarms without consideration of associated alarms and instrumentation.

B. In no case does the information contained herein supersede an OP, OI, AOP or EOP.

6.0 PERFORMANCE

A. Upon receipt of an alarm, **DETERMINE** its validity by comparing appropriate indications to the setpoint, if there is one.

B. IF multiple alarms are received,
THEN **EVALUATE** alarms from highest to lowest priority.

> **NOTE**
> The CONDITIONS - RESPONSES are listed in hierarchical order, NOT as step by step instructions. Perform the response that applies to the existing condition.

C. Utilizing the information provided in the individual alarm response, **PERFORM** the following:

1. **DIAGNOSE** the condition.

2. **IMPLEMENT** the appropriate EOP or AOP or **INITIATE** appropriate responses.

7.0 POST PERFORMANCE ACTIVITIES

None

8.0 BASES

[B0427] SOER 97-01, Recommendation 3.a: Potential Loss of High Pressure Injection and Charging Capability from gas intrusion.

[B0628] ABB Combustion Engineering Infobulletin No. 97-02, Spurious Recirculation Actuation Signal, dtd 5/23/97. 34/00

9.0 RECORDS

None

DEVICE	SETPOINT	WINDOW	G-01
1C07A, CNTMT ISOL OVERRIDES status panel	N/A	CISO STATUS PANEL	

POSSIBLE CAUSES

Any alarm on 1C07A, CNTMT ISOL OVERRIDES status panel.

AUTOMATIC ACTIONS

None

CONDITION	RESPONSE
1. CNTMT ISOL OVERRIDES status panel alarm.	1. **DETERMINE** cause of alarm on 1C07A, CNTMT ISOL OVERRIDES status panel, and **REFER** to 1C07A alarm manual.

ANNUNCIATOR COMPENSATORY ACTIONS

MONITOR 1C07A, CNTMT ISOL OVERRIDES status panel, for alarms at least hourly.

REFERENCES

None

DEVICE	SETPOINT	WINDOW	G-02
1C07A, MISC VLV STATUS panel	N/A	MISC VLV STATUS PANEL	

POSSIBLE CAUSES

Any alarm on 1C07A, MISC VLV STATUS panel.

AUTOMATIC ACTIONS

None

CONDITION	RESPONSE
1. MISC VLV STATUS panel alarm.	1. **DETERMINE** cause of alarm on 1C07A, MISC VLV STATUS panel, and **REFER** to 1C07A alarm manual.

ANNUNCIATOR COMPENSATORY ACTIONS

MONITOR 1C07A, MISC VLV STATUS panel, for alarms at least hourly.

REFERENCES

None

DEVICE	SETPOINT	WINDOW	G-03
1C07A, BLOCKED SI VLVS status panel	N/A	BLOCKED SI VLV STATUS PANEL	

POSSIBLE CAUSES

Any alarm on 1C07A, BLOCKED SI VLVS status panel.

AUTOMATIC ACTIONS

None

CONDITION	RESPONSE
1. BLOCKED SI VLVS status panel alarm.	1. **DETERMINE** cause of alarm on 1C07A, BLOCKED SI VLVS status panel, and **REFER** to 1C07A alarm manual.

ANNUNCIATOR COMPENSATORY ACTIONS

MONITOR 1C07A, BLOCKED SI VLVS status panel, for alarms at least hourly.

REFERENCES

None

DEVICE	SETPOINT	WINDOW	G-04
1RY1AX/313A 1RY1AX/313B 1RY1AX/313C 1RY1AX/313D	N/A	CNTMT PT(S) ISOL	34/01

POSSIBLE CAUSES

CNTMT PRESS XMTR ISOL handswitch(es), 1-HS-5313A, 1-HS-5313B, 1-HS-5313C or 1-HS-5313D, **NOT** in OPEN.

AUTOMATIC ACTIONS

None

CONDITION	RESPONSE
1. Containment pressure transmitter isolation handswitch(es) in CLOSE.	1. **PERFORM** the following: a. **ENSURE** OPEN CNTMT PRESS XMTR ISOLs: • 1-CPI-5313A-SV • 1-CPI-5313B-SV • 1-CPI-5313C-SV • 1-CPI-5313D-SV b. **IF** any valve can **NOT** be opened, **THEN REFER** to TS 3.3.1, 3.3.4 and 3.3.10.

ANNUNCIATOR COMPENSATORY ACTIONS

CHECK OPEN CNTMT PRESS XMTR ISOLs, 1-CPI-5313A-SV, 1-CPI-5313B-SV, 1-CPI-5313C-SV and 1-CPI-5313D-SV, at least hourly.

REFERENCES

1E-76 (61-076-B), Sh.39; OM-65 (60-723-E), Sh.2

DEVICE	SETPOINT	WINDOW	G-05
CNTMT PRESS: 1-PT-5313A 1-PT-5313B 1-PT-5313C 1-PT-5313D	2.8 PSIG (2.6 to 3.0 PSIG)(2/4 logic on ESFAS A or B)	**ACTUATION SYS SIAS TRIP**	
PZR PRESS: 1-PT-102A 1-PT-102B 1-PT-102C 1-PT-102D	1740 PSIA (1725 to 1755 PSIA)(2/4 logic on ESFAS A or B)		

POSSIBLE CAUSES

- Automatic initiation of SIAS A or B logic on:
  - Containment pressure high
  - Pressurizer pressure low
- Manual initiation of SIAS A or B logic
- Failure to block Pressurizer pressure low SIAS A or B on a plant cooldown

AUTOMATIC ACTIONS

REFER to Attachment 2 of EOP Attachments or 1-LD-58A for a complete listing of SIAS automatic actions.

CONDITION	RESPONSE
1. SIAS A or B actuation.	1. **PERFORM** the following: a. **IF** the reactor trips, **THEN IMPLEMENT** EOP-0, Post-Trip Immediate Actions. b. **DETERMINE** the validity of the SIAS by observing alternate channels of indication for the same parameter. c. **IF** the SIAS is invalid or inadvertent, **THEN**, with Shift Manager or Control Room Supervisor approval, **RESET** the SIAS and **RETURN** components to their normal or desired status. d. **REFER** to RM-1-101, Regulatory Reporting, for reportability criteria.

(continued)

(continued) **WINDOW** **G-05**

ANNUNCIATOR COMPENSATORY ACTIONS

MONITOR components listed under Automatic Actions for a SIAS actuation.

REFERENCES

None

DEVICE	SETPOINT	WINDOW	G-06
1-PT-5315A 1-PT-5315B 1-PT-5315C 1-PT-5315D	2.8 PSIG (2.6 to 3.0 PSIG)(2/4 logic on ESFAS A or B)	ACTUATION SYS CIS TRIP	

POSSIBLE CAUSES

- Manual initiation of CIS A or B logic
- Automatic initiation of CIS A or B logic on containment high pressure

AUTOMATIC ACTIONS

REFER to Attachment 4 of EOP Attachments or 1-LD-58A for a complete listing of CIS automatic actions.

CONDITION	RESPONSE
1. CIS A or B actuation.	1. **PERFORM** the following: a. **DETERMINE** the validity of the CIS by observing alternate channels of indication for the same parameter. b. **IF** the CIS is valid, **THEN**: (1) **ENSURE** the reactor has tripped. (2) **IMPLEMENT** EOP-0, Post-Trip Immediate Actions.
(continued)	(continued)

(continued)

(continued) **WINDOW** **G-06**

CONDITION	RESPONSE
1. (continued)	1. (continued) c. IF the CIS is invalid, **THEN MONITOR** the RCPs Controlled Bleed-off and bearing temperatures while performing the following: (1) IF the RCP Controlled Bleed-off temperature(s) exceed 200° F or bearing temperature(s) exceed 195° F, THEN: (a) **TRIP** the reactor. (b) **IMPLEMENT** Reactivity Control section of EOP-0, Post-Trip Immediate Actions. (c) **SECURE** the affected RCP(s). (d) **COMPLETE** EOP-0, Post-Trip Immediate Actions. (2) With Shift Manager or Control Room Supervisor approval, **RESET** the CIS, using Attachment 4 of EOP's as guidance, and **RETURN** components to their normal status. d. **REFER** to RM-1-101, Regulatory Reporting, for reportability criteria.

ANNUNCIATOR COMPENSATORY ACTIONS

MONITOR components listed under Automatic Actions for a CIS actuation.

REFERENCES

None

DEVICE	SETPOINT	WINDOW	G-07
1-PT-5314A 1-PT-5314B 1-PT-5314C 1-PT-5314D	4.25 PSIG (4.05 to 4.45 PSIG)(2/4 logic on ESFAS A or B)	ACTUATION SYS CSAS TRIP	

POSSIBLE CAUSES

- Manual initiation of CSAS A or B logic
- Automatic initiation of CSAS A or B logic on containment high pressure

AUTOMATIC ACTIONS

REFER to Attachment 3 of EOP Attachments or 1-LD-58A for a complete listing of CSAS automatic actions.

CONDITION	RESPONSE
1. CSAS A or B actuation.	1. **PERFORM** the following: a. IF the reactor trips, THEN **IMPLEMENT** EOP-0, Post-Trip Immediate Actions. b. **DETERMINE** the validity of the CSAS by observing alternate channels of indication for the same parameter. c. IF the CSAS is invalid, THEN, with Shift Manager or Control Room Supervisor approval, **RESET** the CSAS and **RETURN** components to their normal status. d. **REFER** to RM-1-101, Regulatory Reporting, for reportability criteria.

ANNUNCIATOR COMPENSATORY ACTIONS

MONITOR components listed under Automatic Actions for a CSAS actuation.

REFERENCES

None

DEVICE	SETPOINT	WINDOW	G-08
1-LS-4142A 1-LS-4142B 1-LS-4142C 1-LS-4142D	30 in. RWT level (27 to 31 in.)(2/4 logic on ESFAS A or B) **NOTE** Setpoint corresponds to 9-13 inches as indicated on 1-LIA-4143	ACTUATION SYS RAS TRIP	

POSSIBLE CAUSES

- Manual initiation of RAS A or B logic
- Automatic initiation of RAS A or B logic on RWT low level

AUTOMATIC ACTIONS

REFER to Attachment 6 of EOP Attachments or 1-LD-58A for a complete listing of RAS automatic actions.

(continued)

(continued) **WINDOW** **G-08**

CONDITION	RESPONSE
1. RAS A or B actuation.	1. **PERFORM** the following: a. IF the alarm is invalid, RWT level is greater than 13 inches as indicated on 1-LIA-4143, with the concurrence of the SM or CRS, THEN **RESET** the RAS. **[B0427]** b. IF the alarm is valid, RWT level is less than 13 inches as indicated on 1-LIA-4143, THEN: • **ENSURE** the following: (1) CNTMT SUMP DISCHs, 1-SI-4144-MOV and 1-SI-4145-MOV are open. (2) **SHUT** 11 RWT OUT, 1-SI-4142-MOV and 1-SI-4143-MOV. • **PLACE** SI PP RECIRC LOCKOUT handswitches, 1-HS-3659A and 1-HS-3660A, to ON. • **ENSURE SHUT** MINI FLOW RETURN TO RWT ISOLs, 1-SI-659-MOV and 1-SI-660-MOV. • **ENSURE** 11 and 12 LPSI Pumps stopped.

ANNUNCIATOR COMPENSATORY ACTIONS

MONITOR components listed under Automatic Actions for a RAS actuation.

REFERENCES

None

DEVICE	SETPOINT	WINDOW	G-09
1-PT-1013A 1-PT-1013B 1-PT-1013C 1-PT-1013D	703 PSIA (685 to 721 PSIA)(2/4 11 SG pressure sensors tripped)	ACTUATION SYS SGIS A TRIP	

POSSIBLE CAUSES

- Automatic initiation of SGIS A logic due to a steam line rupture
- Failure to block SGIS A on a plant cooldown

AUTOMATIC ACTIONS

REFER to Attachment 7 of EOP Attachments or 1-LD-58A for a complete listing of SGIS automatic actions.

CONDITION	RESPONSE
1. SGIS A actuation.	1. **PERFORM** the following: a. **IF** the reactor trips, **THEN IMPLEMENT** EOP-0, Post-Trip Immediate Actions. b. **IF** performing a plant cooldown, **THEN PERFORM** the following: (1) **BLOCK** SGIS A. (2) **RESET** SGIS A. (3) **RETURN** components required for cooldown to their required status. (4) **CONTINUE** plant cooldown per the applicable Operating Procedure. c. **REFER** to RM-1-101, Regulatory Reporting, for reportability criteria.

ANNUNCIATOR COMPENSATORY ACTIONS

MONITOR components listed under Automatic Actions for an SGIS A actuation.

REFERENCES

None

DEVICE	SETPOINT	WINDOW	G-10
1-PT-1023A 1-PT-1023B 1-PT-1023C 1-PT-1023D	703 PSIA (685 to 721 PSIA)(2/4 12 SG pressure sensors tripped)	ACTUATION SYS SGIS B TRIP	

POSSIBLE CAUSES

- Automatic initiation of SGIS B logic due to a steam line rupture
- Failure to block SGIS B on a plant cooldown

AUTOMATIC ACTIONS

REFER to Attachment 7 of EOP Attachments or 1-LD-58A for a complete listing of SGIS automatic actions.

CONDITION	RESPONSE
1. SGIS B actuation.	1. **PERFORM** the following: a. IF the reactor trips, THEN **IMPLEMENT** EOP-0, Post-Trip Immediate Actions. b. IF performing a plant cooldown, THEN **PERFORM** the following: (1) **BLOCK** SGIS B. (2) **RESET** SGIS B. (3) **RETURN** components required for cooldown to their required status. (4) **CONTINUE** plant cooldown per the applicable Operating Procedure. c. **REFER** to RM-1-101, Regulatory Reporting, for reportability criteria.

ANNUNCIATOR COMPENSATORY ACTIONS

MONITOR components listed under Automatic Actions for an SGIS B actuation.

REFERENCES

None

DEVICE	SETPOINT	WINDOW	G-11
1-RI-5316A 1-RI-5316B 1-RI-5316C 1-RI-5316D	170 mR/hr (160 to 180 mR/hr)(2/4 sensors channels tripped)	ACTUATION SYS CRS TRIP	

POSSIBLE CAUSES

- Manual initiation of CRS A or B logic
- Automatic initiation of CRS A or B logic due to:
  - Rupture of fuel element(s) during refueling
  - Rupture of Reactor Coolant System during power operation

AUTOMATIC ACTIONS

REFER to Attachment 5 of EOP Attachments or 1-LD-58A for a complete listing of CRS automatic actions.

CONDITION	RESPONSE
1. CRS A or B actuation.	1. **PERFORM** the following: a. **IF** the reactor trips, **THEN IMPLEMENT** EOP-0, Post-Trip Immediate Actions. b. **IF** unit is performing refueling operations, **THEN IMPLEMENT** AOP-6D, Fuel Handling Incident.

ANNUNCIATOR COMPENSATORY ACTIONS

MONITOR components listed under Automatic Actions for a CRS actuation.

REFERENCES

None

DEVICE	SETPOINT	WINDOW	G-12
None	None	SPARE	

POSSIBLE CAUSES

None

AUTOMATIC ACTIONS

None

CONDITION	RESPONSE
1. None.	1. None.

ANNUNCIATOR COMPENSATORY ACTIONS

None

REFERENCES

None

DEVICE	SETPOINT	WINDOW	G-13
BIS12/S1 BIS13/S1 (4 bistables each)	N/A	ACTUATION SYS U/V RELAY TRIP	

POSSIBLE CAUSES

- Undervoltage on either 11 or 14 4KV Buses as detected by one of the four undervoltage sensors connected to each bus
- Power lost or secured to a sensor cabinet

AUTOMATIC ACTIONS

Tripping of two or more undervoltage relays will result in load shed, DG start **AND** sequencer actuation.

CONDITION	RESPONSE
1. 11 or 14 4KV Bus undervoltage relay actuation.	1. **PERFORM** the following: a. **IF** the reactor trips, **THEN IMPLEMENT** EOP-0, Post-Trip Immediate Actions. b. **IF** more than one undervoltage relay has tripped, **THEN IMPLEMENT** applicable sections of AOP-7I, Loss of 4KV, 480 Volt or 208/120 Volt Instrument Bus Power. c. **IF** only ONE undervoltage relay has tripped or power was lost, **THEN DETERMINE** the cause for the relay trip or loss of power. d. **IF** power was secured to a sensor cabinet, **THEN** no operator action is required.

ANNUNCIATOR COMPENSATORY ACTIONS

CHECK ESFAS sensor bistable cabinets for UV trips at least every 6 hours.

REFERENCES

None

DEVICE	SETPOINT	WINDOW	G-14
UV/S2 (2 bistables)	N/A	ACTUATION SYS 2/4 4KV U/V TRIP	

POSSIBLE CAUSES

Loss of voltage on either 11 or 14 4KV Bus due to feeder breakers opening.

AUTOMATIC ACTIONS

For the affected bus: (as determined by observation of panels 1C18, 1C18A, 1C18B and 1C19)

- The DG bus will start
- A Load Shed will occur for the bus

CONDITION	RESPONSE
1. 11 or 14 4KV Bus undervoltage.	1. **PERFORM** the following: a. **IF** the reactor trips, **THEN IMPLEMENT** EOP-0, Post-Trip Immediate Actions. b. **DETERMINE** which bus(es) has lost power. c. **IMPLEMENT** applicable sections of AOP-7I, Loss of 4KV, 480 Volt or 208/120 Volt Instrument Bus Power.

ANNUNCIATOR COMPENSATORY ACTIONS

MONITOR components supplied by 11 and 14 4KV Bus for load shedding and DG automatic start.

REFERENCES

None

DEVICE	SETPOINT	WINDOW	G-15
SASB/S2 (2 bistables)	N/A	ACTUATION SIGNAL BLOCKED	

POSSIBLE CAUSES

- Breakers 152-1101 and 152-1115 open and an undervoltage condition exists on 11 4KV Bus
- Breakers 152-1401 and 152-1414 open and an undervoltage condition exists on 14 4KV Bus

AUTOMATIC ACTIONS

Once the alarm is initiated, the alarm will remain in effect until all LOCI sequencing steps are completed. If a step failed to time out, this alarm will remain in. (Alarm will remain in for SDS sequencer.)

CONDITION	RESPONSE
1. Alarm received.	1. **ENSURE** applicable bus(es) have power restored as soon as practicable.

ANNUNCIATOR COMPENSATORY ACTIONS

CHECK breakers 152-1101, 152-1115, 152-1401 and 152-1414 closed at least every 6 hours.

REFERENCES

None

DEVICE	SETPOINT	WINDOW	G-16
SDS/SI LOCI/SI (2 bistables each)	N/A	SEQUENCER INITIATED	

POSSIBLE CAUSES

- Any of the following DG Output Breakers closed to provide power to 11 or 14 4KV Bus:
  - 152-1703 (1A DG)
  - 152-1106 (0C DG)
  - 152-1403 (1B DG)
  - 152-1406 (0C DG)
- The associated 4KV Bus LOCIS/SDS Sequencer Manual Initiate keyswitch is placed in ON with the normal or alternate 4KV feeder breaker closed

AUTOMATIC ACTIONS

- LOCI Sequencer will be initiated on an under voltage condition with a SIAS signal present
- Shutdown Sequencer will be initiated when a DG breaker shuts or the associated 4KV Bus LOCIS/SDS Sequencer Manual Initiate keyswitch is placed in ON and no SIAS signal is present

CONDITION	RESPONSE
1. LOCI or Shutdown Sequencer is initiated.	1. **PERFORM** the following: a. **IF** a DG starts due to an automatic start function, **THEN IMPLEMENT** the appropriate EOP or AOP, as applicable. b. **IF** a DG is being manually paralleled onto a bus, **THEN** no operator action is required.

ANNUNCIATOR COMPENSATORY ACTIONS

MONITOR components supplied by 11 and 14 4KV Bus for load shedding and DG automatic start.

REFERENCES

61-058

DEVICE	SETPOINT	WINDOW	G-17
1-PT-5316A 1-PT-5316B 1-PT-5316C 1-PT-5316D	0.43 PSIG (0.36 to 0.50 PSIG)(2/4 logic on ESFAS A)	ACTUATION SYS CVCS A TRIP	

POSSIBLE CAUSES

0.43 PSIG in either the Letdown Heat Exchanger Room or West Piping Penetration Room.

AUTOMATIC ACTIONS

L/D CNTMT ISOL, 1-CVC-515-CV, will shut at 0.43 PSIG.

CONDITION	RESPONSE
1. Letdown Heat Exchanger Room or West Piping Penetration Room high pressure.	1. **PERFORM** the following: a. **ENSURE** L/D CNTMT ISOL, 1-CVC-515-CV, shut. b. **SECURE** Charging **PER** OI-2A, Chemical and Volume Control System. c. **DETERMINE** and **CORRECT** cause for alarm.

ANNUNCIATOR COMPENSATORY ACTIONS

MONITOR Letdown flow and L/D CNTMT ISOL, 1-CVC-515-CV, for a CVCS A actuation.

REFERENCES

None

DEVICE	SETPOINT	WINDOW	G-18
1-PT-5316A 1-PT-5316B 1-PT-5316C 1-PT-5316D	0.43 PSIG (0.36 to 0.50 PSIG)(2/4 logic on ESFAS B)	**ACTUATION SYS CVCS B TRIP**	

POSSIBLE CAUSES

0.43 PSIG in either the Letdown Heat Exchanger Room or West Piping Penetration Room.

AUTOMATIC ACTIONS

L/D CNTMT ISOL, 1-CVC-516-CV, will shut at 0.43 PSIG.

CONDITION	RESPONSE
1. Letdown Heat Exchanger Room or West Piping Penetration Room high pressure.	1. **PERFORM** the following: a. **ENSURE** L/D CNTMT ISOL, 1-CVC-516-CV, shut. b. **SECURE** Charging **PER** OI-2A, Chemical and Volume Control System. c. **DETERMINE** and **CORRECT** cause for alarm.

ANNUNCIATOR COMPENSATORY ACTIONS

MONITOR Letdown flow and L/D CNTMT ISOL, 1-CVC-516-CV, for a CVCS B actuation.

REFERENCES

None

DEVICE	SETPOINT	WINDOW	G-19
None	None	SPARE	

POSSIBLE CAUSES

None

AUTOMATIC ACTIONS

None

CONDITION	RESPONSE
1. None.	1. None.

ANNUNCIATOR COMPENSATORY ACTIONS

None

REFERENCES

None

DEVICE	SETPOINT	WINDOW	G-20
Any one of 80 ESFAS sensor channel keys placed in BYP	None	SENSOR CH MAINTENANCE BYP	

POSSIBLE CAUSES

- One or more ESFAS sensor channels placed in bypass
- Power lost or secured to a sensor cabinet

AUTOMATIC ACTIONS

- ESFAS trip coincidence is changed from a two-out-of-four (2/4) to a two-out-of-three (2/3) logic when placed in bypass
- SIAS or SGIS block permissive coincidence is changed from a three-out-of-four (3/4) to a three-out-of-three (3/3) logic when placed in bypass

CONDITION	RESPONSE
1. Sensor channel power is lost.	1. **PERFORM** the following: a. **DETERMINE** the cause for loss of power to the sensor channel. b. **RESTORE** power to the sensor channel **PER** OI-34, Engineered Safety Features Actuation System, as applicable.
2. Sensor channel is bypassed or power secured.	2. **IF** a sensor channel was bypassed or power secured, **THEN** no operator action is required.

ANNUNCIATOR COMPENSATORY ACTIONS

CHECK ESFAS sensor cabinets power and bypass keys positions are correct for current plant conditions at least every 6 hours.

REFERENCES

None

DEVICE	SETPOINT	WINDOW	G-21
Any one of Channel ZD 12 sensor bistables:		ACTUATION SYS SENSOR CH ZD TRIP	
PZR Pressure (SIAS)	1740 PSIA (1725 to 1755)		
PZR Pressure (DSS)	2450 PSIA (2435 to 2465)		
PZR pressure block permitted	1785 PSIA (1770 to 1800)		
CNTMT pressure (SIAS)	2.8 PSIG (2.6 to 3.0)		
CNTMT pressure (CIS)	2.8 PSIG (2.6 to 3.0)		
CNTMT pressure (CSAS)	4.25 PSIG (4.05 to 4.45)		
CNTMT RAD Signal (CRS)	170 mR/hr (160 to 180)		
11 SG pressure (SGIS)	703 PSIA (685 to 721)		
12 SG pressure (SGIS)	703 PSIA (685 to 721)		
11 SG pressure block permitted	767 PSIA (749 to 785)		
12 SG pressure block permitted	767 PSIA (749 to 785)		
CVCS Isolation (CVCIS)	0.43 PSIG (0.36 to 0.5)		
RWT Level (RAS)	30 in. (27 to 31)		

CAUTION

Due to the risk of inadvertent RAS, if an individual RAS sensor channel remains tripped, then the GS-NPO should be contacted to evaluate unit shutdown. [B0628]

34/00

POSSIBLE CAUSES

Actuation signal from one of twelve sensors listed under initiating device.

AUTOMATIC ACTIONS

None

(continued)

(continued) **WINDOW** **G-21**

CONDITION	RESPONSE
1. Actuation system Channel ZD sensor tripped.	1. **PERFORM** the following: a. **DETERMINE** which sensor has tripped on ESFAS sensor cabinet ZD. b. **DETERMINE** the validity of the actuation by observing alternate channels of indication for the same parameter. c. **IF** the actuation is valid, **THEN REFER** to the applicable AOP or EOP. d. **IF** the actuation is invalid, **THEN REFER** to TS 3.3.4, 3.3.7 and 3.3.9 for ESFAS channel operability.

ANNUNCIATOR COMPENSATORY ACTIONS

MONITOR ESFAS sensor cabinet ZD for tripped sensor(s) bistables at least every 6 hours.

REFERENCES

None

DEVICE	SETPOINT	WINDOW	G-22
Any one of Channel ZE 12 sensor bistables:		ACTUATION SYS SENSOR CH ZE TRIP	
PZR pressure (SIAS)	1740 PSIA (1725 to 1755)		
PZR pressure (DSS)	2450 PSIA (2435 to 2465)		
PZR pressure block permitted	1785 PSIA (1770 to 1800)		
CNTMT pressure (SIAS)	2.8 PSIG (2.6 to 3.0)		
CNTMT pressure (CIS)	2.8 PSIG (2.6 to 3.0)		
CNTMT pressure (CSAS)	4.25 PSIG (4.05 to 4.45)		
CNTMT RAD Signal (CRS)	170 mR/hr (160 to 180)		
11 SG pressure (SGIS)	703 PSIA (685 to 721)		
12 SG pressure (SGIS)	703 PSIA (685 to 721)		
11 SG pressure block permitted	767 PSIA (749 to 785)		
12 SG pressure block permitted	767 PSIA (749 to 785)		
CVCS Isolation (CVCIS)	0.43 PSIG (0.36 to 0.5)		
RWT Level (RAS)	30 in. (27 to 31)		

CAUTION

Due to the risk of inadvertent RAS, if an individual RAS sensor channel remains tripped, then the GS-NPO should be contacted to evaluate unit shutdown. [B0628]

34/00

POSSIBLE CAUSES

Actuation signal from one of twelve sensors listed under initiating device.

AUTOMATIC ACTIONS

None

(continued)

(continued) **WINDOW** **G-22**

CONDITION	RESPONSE
1. Actuation system Channel ZE sensor tripped.	1. **PERFORM** the following: a. **DETERMINE** which sensor has tripped on ESFAS sensor cabinet ZE. b. **DETERMINE** the validity of the actuation by observing alternate channels of indication for the same parameter. c. **IF** the actuation is valid, **THEN REFER** to the applicable AOP or EOP. d. **IF** the actuation is invalid, **THEN REFER** to TS 3.3.4, 3.3.7 and 3.3.9 for ESFAS channel operability.

ANNUNCIATOR COMPENSATORY ACTIONS

MONITOR ESFAS sensor cabinet ZE for tripped sensor(s) bistables at least every 6 hours.

REFERENCES

None

DEVICE	SETPOINT	WINDOW	G-23
Any one of Channel ZF 12 sensor bistables:		ACTUATION SYS SENSOR CH ZF TRIP	
PZR pressure (SIAS)	1740 PSIA (1725 to 1755)		
PZR pressure (DSS)	2450 PSIA (2435 to 2465)		
PZR pressure block permitted	1785 PSIA (1770 to 1800)		
CNTMT pressure (SIAS)	2.8 PSIG (2.6 to 3.0)		
CNTMT pressure (CIS)	2.8 PSIG (2.6 to 3.0)		
CNTMT pressure (CSAS)	4.25 PSIG (4.05 to 4.45)		
CNTMT RAD Signal (CRS)	170 mR/hr (160 to 180)		
11 SG pressure (SGIS)	703 PSIA (685 to 721)		
12 SG pressure (SGIS)	703 PSIA (685 to 721)		
11 SG pressure block permitted	767 PSIA (749 to 785)		
12 SG pressure block permitted	767 PSIA (749 to 785)		
CVCS Isolation (CVCIS)	0.43 PSIG (0.36 to 0.5)		
RWT Level (RAS)	30 in. (27 to 31)		

CAUTION

Due to the risk of inadvertent RAS, if an individual RAS sensor channel remains tripped, then the GS-NPO should be contacted to evaluate unit shutdown. [B0628] 34/00

POSSIBLE CAUSES

Actuation signal from one of twelve sensors listed under initiating device.

AUTOMATIC ACTIONS

None

(continued)

(continued) **WINDOW** G-23

CONDITION	RESPONSE
1. Actuation system Channel ZF sensor tripped.	1. **PERFORM** the following: a. **DETERMINE** which sensor has tripped on ESFAS sensor cabinet ZF. b. **DETERMINE** the validity of the actuation by observing alternate channels of indication for the same parameter. c. **IF** the actuation is valid, **THEN REFER** to the applicable AOP or EOP. d. **IF** the actuation is invalid, **THEN REFER** to TS 3.3.4, 3.3.7 and 3.3.9 for ESFAS channel operability.

ANNUNCIATOR COMPENSATORY ACTIONS

MONITOR ESFAS sensor cabinet ZF for tripped sensor(s) bistables at least every 6 hours.

REFERENCES

None

DEVICE	SETPOINT	WINDOW	G-24
Any one of Channel ZG 12 sensor bistables:		ACTUATION SYS SENSOR CH ZG TRIP	
PZR pressure (SIAS)	1740 PSIA (1725 to 1755)		
PZR pressure (DSS)	2450 PSIA (2435 to 2465)		
PZR pressure block permitted	1785 PSIA (1770 to 1800)		
CNTMT pressure (SIAS)	2.8 PSIG (2.6 to 3.0)		
CNTMT pressure (CIS)	2.8 PSIG (2.6 to 3.0)		
CNTMT pressure (CSAS)	4.25 PSIG (4.05 to 4.45)		
CNTMT RAD Signal (CRS)	170 mR/hr (160 to 180)		
11 SG pressure (SGIS)	703 PSIA (685 to 721)		
12 SG pressure (SGIS)	703 PSIA (685 to 721)		
11 SG pressure block permitted	767 PSIA (749 to 785)		
12 SG pressure block permitted	767 PSIA (749 to 785)		
CVCS Isolation (CVCIS)	0.43 PSIG (0.36 to 0.5)		
RWT Level (RAS)	30 in. (27 to 31)		

CAUTION

Due to the risk of inadvertent RAS, if an individual RAS sensor channel remains tripped, then the GS-NPO should be contacted to evaluate unit shutdown. [B0628]

34/00

POSSIBLE CAUSES

Actuation signal from one of twelve sensors listed under initiating device.

AUTOMATIC ACTIONS

None

(continued)

(continued) **WINDOW** **G-24**

CONDITION	RESPONSE
1. Actuation system Channel ZG sensor tripped.	1. **PERFORM** the following: a. **DETERMINE** which sensor has tripped on ESFAS sensor cabinet ZG. b. **DETERMINE** the validity of the actuation by observing alternate channels of indication for the same parameter. c. **IF** the actuation is valid, **THEN REFER** to the applicable AOP or EOP. d. **IF** the actuation is invalid, **THEN REFER** to TS 3.3.4, 3.3.7 and 3.3.9 for ESFAS channel operability.

ANNUNCIATOR COMPENSATORY ACTIONS

MONITOR ESFAS sensor cabinet ZG for tripped sensor(s) bistables at least every 6 hours.

REFERENCES

None

DEVICE	SETPOINT	WINDOW	G-25
SIAS PRZR PRESS BLOCK CH-A keyswitch, 1-HS-5	See Possible Causes	PZR PRESS BLOCK A	

POSSIBLE CAUSES

Placing SIAS PRZR PRESS BLOCK CH-A keyswitch, 1-HS-5, to BLOCK when three out of four Pressurizer pressure detectors sense less than 1785 PSIA.

AUTOMATIC ACTIONS

- ESFAS Pressurizer pressure low SIAS Channel A automatic actuation becomes inoperative
- SIAS will automatically unblock when two out of four Pressurizer pressure detectors sense greater than 1785 PSIA

CONDITION	RESPONSE
1. None.	1. None.

ANNUNCIATOR COMPENSATORY ACTIONS

CHECK ESFAS logic cabinet AL SIAS Block logic module BLOCK light illuminated when SIAS is blocked at least every 6 hours.

REFERENCES

None

DEVICE	SETPOINT	WINDOW	G-26
SIAS PRZR PRESS BLOCK CH-B keyswitch, 1-HS-6	See Possible Causes	PZR PRESS BLOCK B	

POSSIBLE CAUSES

Placing SIAS PRZR PRESS BLOCK CH-B keyswitch, 1-HS-6, to BLOCK when three out of four Pressurizer pressure detectors sense less than 1785 PSIA.

AUTOMATIC ACTIONS

- ESFAS Pressurizer pressure low SIAS Channel B automatic actuation becomes inoperative
- SIAS will automatically unblock when two out of four Pressurizer pressure detectors sense greater than 1785 PSIA

CONDITION	RESPONSE
1. None.	1. None.

ANNUNCIATOR COMPENSATORY ACTIONS

CHECK ESFAS logic cabinet BL SIAS Block logic module BLOCK light illuminated when SIAS is blocked at least every 6 hours.

REFERENCES

None

DEVICE	SETPOINT	WINDOW	G-27
None	None	SPARE	

POSSIBLE CAUSES

None

AUTOMATIC ACTIONS

None

CONDITION	RESPONSE
1. None.	1. None.

ANNUNCIATOR COMPENSATORY ACTIONS

None

REFERENCES

None

DEVICE	SETPOINT	WINDOW	G-28
None	None	SPARE	

POSSIBLE CAUSES

None

AUTOMATIC ACTIONS

None

CONDITION	RESPONSE
1. None.	1. None.

ANNUNCIATOR COMPENSATORY ACTIONS

None

REFERENCES

None

DEVICE	SETPOINT	WINDOW	G-29
1-PT-102A 1-PT-102B 1-PT-102C 1-PT-102D	Three out of four PZR pressure detectors sense less than 1785 PSIA (1770 to 1800 PSIA)	PZR PRESS BLOCK A PERMITTED	

POSSIBLE CAUSES

- Loss of coolant accident
- Steam line rupture
- Normal plant cooldown and depressurization

AUTOMATIC ACTIONS

Blocking of Pressurizer pressure low SIAS Channel A actuation is permitted.

NOTE

Placement of SIAS PRZR PRESS BLOCK CH-A keyswitch, 1-HS-5, to BLOCK prior to reaching a Pressurizer pressure of 1740 PSIA is required to preclude an inadvertent SIAS actuation.

CONDITION	RESPONSE
1. Three out of four Pressurizer pressure detectors sense less than 1785 PSIA.	1. **PERFORM** the following: a. **IF** a plant cooldown is in progress, **THEN BLOCK** SIAS A. b. **IF** directed by an AOP or EOP, **THEN BLOCK** SIAS A.

ANNUNCIATOR COMPENSATORY ACTIONS

MONITOR ESFAS logic cabinet AL for the SIAS Block logic module PERMISSION TO BLOCK light to illuminate while performing a plant cooldown.

REFERENCES

None

DEVICE	SETPOINT	WINDOW	G-30
1-PT-102A 1-PT-102B 1-PT-102C 1-PT-102D	Three out of four PZR pressure detectors sense less than 1785 PSIA (1770 to 1800 PSIA)	PZR PRESS BLOCK B PERMITTED	

POSSIBLE CAUSES

- Loss of coolant accident
- Steam line rupture
- Normal plant cooldown and depressurization

AUTOMATIC ACTIONS

Blocking of Pressurizer pressure low SIAS Channel B actuation is permitted.

NOTE

Placement of SIAS PRZR PRESS BLOCK CH-B keyswitch, 1-HS-6, to BLOCK prior to reaching a Pressurizer pressure of 1740 PSIA is required to preclude an inadvertent SIAS actuation.

CONDITION	RESPONSE
1. Three out of four Pressurizer pressure detectors sense less than 1785 PSIA.	1. **PERFORM** the following: a. **IF** a plant cooldown is in progress, **THEN BLOCK** SIAS B. b. **IF** directed by an AOP or EOP, **THEN BLOCK** SIAS B.

ANNUNCIATOR COMPENSATORY ACTIONS

MONITOR ESFAS logic cabinet BL for the SIAS Block logic module PERMISSION TO BLOCK light to illuminate while performing a plant cooldown.

REFERENCES

None

DEVICE	SETPOINT	WINDOW	G-31
None	None	SPARE	

POSSIBLE CAUSES

None

AUTOMATIC ACTIONS

None

CONDITION	RESPONSE
1. None.	1. None.

ANNUNCIATOR COMPENSATORY ACTIONS

None

REFERENCES

None

DEVICE	SETPOINT	WINDOW	G-32
None	None	SPARE	

POSSIBLE CAUSES

None

AUTOMATIC ACTIONS

None

CONDITION	RESPONSE
1. None.	1. None.

ANNUNCIATOR COMPENSATORY ACTIONS

None

REFERENCES

None

DEVICE	SETPOINT	WINDOW	G-33
Actuation system sensor cabinet door (4 bistables) 1C91, 1C92, 1C93 and 1C94	N/A	ACTUATION SYS CABINET DOOR OPEN	34/02

POSSIBLE CAUSES

- ESFAS sensor cabinet front door unlocked
- ESFAS sensor cabinet back door unlocked
- ESFAS sensor cabinet DOOR OPEN test pushbutton depressed
- ESFAS sensor cabinet door bistable jarred to a tripped condition by someone in the vicinity

34/02

AUTOMATIC ACTIONS

None

CONDITION	RESPONSE
1. ESFAS sensor cabinet door open alarm received.	1. **PERFORM** the following: a. **IF** ESFAS testing is **NOT** in progress, **THEN DETERMINE** cause of alarm at the ESFAS sensor cabinets. b. **RESET** the ESFAS sensor cabinet door open bistable by ensuring the applicable door is closed.

34/02

ANNUNCIATOR COMPENSATORY ACTIONS

CHECK ESFAS sensor cabinet doors closed and locked at least every 6 hours or attended by qualified personnel. 34/02

REFERENCES

None

DEVICE	SETPOINT	WINDOW	G-34
None	None	SPARE	

POSSIBLE CAUSES

None

AUTOMATIC ACTIONS

None

CONDITION	RESPONSE
1. None.	1. None.

ANNUNCIATOR COMPENSATORY ACTIONS

None

REFERENCES

None

DEVICE	SETPOINT	WINDOW	G-35
Actuation system loss of power circuit breaker (6 relays)	N/A	ACTUATION SYS LOSS OF POWER	

POSSIBLE CAUSES

Power lost or secured to a sensor or actuation cabinet.

AUTOMATIC ACTIONS

- Loss of power to a sensor cabinet results in a trip output from each of the sensor bistables located in that sensor cabinet
- Loss of power to an actuation cabinet results in the loss of that channel and no safety feature will be actuated by the channel deenergized

CONDITION	RESPONSE
1. Actuation system loss of power.	1. **PERFORM** the following: a. **RESTORE** power as soon as practicable **PER** OI-34, Engineered Safety Features Actuation System. b. **REFER** to TS 3.3.4, 3.3.5, 3.3.6, 3.3.7, 3.3.9, 3.8.1 and 3.8.2 for partial loss of ESFAS instrumentation.

ANNUNCIATOR COMPENSATORY ACTIONS

CHECK ESFAS cabinets Main Breakers closed at least every 6 hours.

REFERENCES

None

DEVICE	SETPOINT	WINDOW	G-36
None	None	SPARE	

POSSIBLE CAUSES

None

AUTOMATIC ACTIONS

None

CONDITION	RESPONSE
1. None.	1. None.

ANNUNCIATOR COMPENSATORY ACTIONS

None

REFERENCES

None

CALVERT CLIFFS NUCLEAR POWER PLANT

UNIT ONE

1C10-ALM

ESFAS 13 ALARM MANUAL

REVISION 41

Safety Related

REFERENCE USE

Approval Authority: Kent Mills 3/25/2002
signature/date

Effective Date: 3/25/2002

LIST OF EFFECTIVE PAGES

PAGE NUMBERS	REVISION
1-57	41

PROCEDURE ALTERATIONS

PAGE NUMBERS	REVISION/CHANGE
18	04108

1.0 PURPOSE

A. This Alarm Manual provides information to the Operator for diagnosis of alarm conditions and recommended actions to mitigate the consequences of the alarm condition.

B. This Alarm Manual provides pre-planned compensatory actions that should be considered for implementation when an alarm is not available.

2.0 APPLICABILITY/SCOPE

This Alarm Manual addresses Control Room annunciator panel 1C10.

3.0 REFERENCES AND DEFINITIONS

3.1 DEVELOPMENTAL REFERENCES

A. Drawings:

1. 1-LD-58 (61-058-E), Logic Diagram Engineered Safety Features Actuation System Unit 1

2. 1E-59 (61-059-E), Engineered Safety Features Actuation System

3. 1E-87 (61-087-E), Engineered Safety Features Control Board 1C10

B. NO-1-201, Calvert Cliffs Operating Manual

C. NO-1-206, Alarm Annunciator Control

D. Additional references are listed in the response for each alarm window.

3.2 PERFORMANCE REFERENCES

A. Alarm Manuals

1C22
1C101
1C102
1C139
1K12
2C24B

B. AOP-2A, Excessive Reactor Coolant Leakage

C. AOP-3B, Loss of Shutdown Cooling

D. AOP-3G, Malfunctions of Main Feedwater System

E. AOP-7A, Loss of Saltwater Cooling

F. AOP-7B, Loss of Service Water Cooling

G. AOP-7C, Loss of Component Cooling

H. EOP-0, Post-Trip Immediate Actions

I. EOP-4, Excess Steam Demand Event

J. EOP-5, Loss of Coolant Accident

K. Emergency Response Plan Implementing Procedure

L. OI-4, Nitrogen Gas System

M. OI-14A, Circulating Water System

N. OI-17D, Miscellaneous Waste Processing System

O. OI-22C, ECCS Pump Room Ventilation

P. OI-22G, Penetration Room Exhaust System

Q. OI-22H, Switchgear Ventilation and Air Conditioning

R. OI-29A, Salt Water Chemical Addition System

S. OI-32A, Auxiliary Feedwater System

T. OI-35, Radiation Monitoring System

U. OI-47, Miscellaneous and Equipment Area Drains

V. OI-48, Wide Range Noble Gas Monitor

W. STP O-27-1, Reactor Coolant System Leakage Evaluation

X. CCNPP Technical Specifications

Y. Technical Requirements Manual (TRM)

3.3 DEFINITIONS

None

4.0 PREREQUISITES

Specific alarm received or not available.

5.0 PRECAUTIONS

A. Inappropriate actions may result if operational decisions are based solely on single alarms without consideration of associated alarms and instrumentation.

B. In no case does the information contained herein supersede an OP, OI, AOP or EOP.

6.0 PERFORMANCE

A. Upon receipt of an alarm, **DETERMINE** its validity by comparing appropriate indications to the setpoint, if there is one:

B. **IF** multiple alarms are received,
THEN EVALUATE alarms from highest to lowest priority.

> **NOTE**
> The CONDITIONS - RESPONSES are listed in hierarchical order, **NOT** as step by step instructions. Perform the response that applies to the existing condition.

C. **UTILIZING** the information for each alarm:

1. **DIAGNOSE** the condition.

2. **IMPLEMENT** the appropriate EOP or AOP or **INITIATE** appropriate responses.

7.0 POST PERFORMANCE ACTIVITIES

None

8.0 BASES

[B0098] Design Engineering Memo, MEU 91-999-232: Engineering Evaluation recommends for all Saltwater Pump bearings to be inspected and repacked if the Intake Structure is flooded.

[B0101] Response to Recommendation 4 of SOER 85-05 (INPO): Specific procedure steps developed for areas in the plant where Safe Shutdown system functions could be lost due to flooding.

[B0131] Response to NRC Inspection Report 92-80/80 (EDSFI Audit), Engineering Memo No. 92-B-032-110-RO: Procedural steps developed for a total loss of Switchgear Room HVAC.

[B0796] IR3-050-813, NRC Inspection Report 200-12 NCV 01-012-004, failure to prepare IR to document failure of both 11 & 12 SWGR HVAC compressors necessitated aligning the system in the fresh air mode, the 12 SWGR ventilation fan was unable to maintain switchgear room temperature.

9.0 RECORDS

None

DEVICE	SETPOINT	WINDOW	J-01
1-PIA-5277 1-PIA-5278	2.0 in. H_2O (1.8 to 2.2 in. H_2O)	EAST PENET RM PRESS HI	

POSSIBLE CAUSES

- Piping rupture in the East Penetration Room
- High pressure in Containment with a corresponding failure of a Containment Penetration

AUTOMATIC ACTIONS

Penetration Room Exhaust Fans automatically start on a CIS initiation.

WARNING

- High pressure in the East Penetration Room could result in the spread of contamination to the surrounding rooms.
- Danger to personnel could be present due to contamination or steam in the penetration rooms.

CONDITION	RESPONSE
1. High pressure in the East Penetration Room.	1. Perform the following: a. **IF** a piping rupture has occurred within the room, **THEN**: (1) Manually **START** the exhaust fans **PER** the Manual Startup section of OI-22G, Penetration Room Exhaust System. (2) **DETERMINE** the cause **AND ISOLATE** if possible. b. **IF** CIS has initiated, **THEN CHECK** the penetration room exhaust fans have automatically started.

(continued)

(continued) **WINDOW** **J-01**

ANNUNCIATOR COMPENSATORY ACTIONS

MONITOR East Penetration Room pressure at least hourly.

REFERENCES

OM-65 (60-723-E) Sh.1 1E-85 (61-085-D) Sh.4 1E-87 (61-087-E) Sh.7A

DEVICE	SETPOINT	WINDOW	J-02
1-74E (1K06 or 1K07)	15 PSIG (10 to 20 PSIG)	EAST PENET RM CANISTER PRESS LO	

POSSIBLE CAUSES

One of the electrical penetrations nitrogen pressure low in East Penetration Room.

AUTOMATIC ACTIONS

None

CONDITION	RESPONSE
1. Electrical penetration canister pressure low in East Penetration Room.	1. Perform the following: a. **DETERMINE** canister with alarming condition from local alarm panel (dropped flag in window of local panel). b. **CHECK** local pressure indication of the canister in alarm to verify alarm. c. **RECHARGE** canister with nitrogen **PER** Electrical Penetration Canister Nitrogen Operations section of OI-4, Nitrogen Gas System. d. **WHEN** nitrogen pressure within the canister is normal (approximately 25 to 30 PSIG), **THEN RESET** the alarm at the local panel: (1) **RESET** the dropped flag by placing the T-handle switch in DROP RESET. (2) **RESET** the alarm by placing the T-handle switch in SIGNAL RESET.
(continued)	(continued)

(continued)

(continued) **WINDOW** **J-02**

CONDITION	RESPONSE
1. (continued)	1. (continued) e. **IF** the same canister is losing pressure consistently, **THEN ENSURE** a CR is submitted for repair.

ANNUNCIATOR COMPENSATORY ACTIONS

MONITOR pressure indications of penetration canisters in East Penetration Room at least every 6 hours.

REFERENCES

1E-87 (61-087-E) Sh.7A and 24

DEVICE	SETPOINT	WINDOW	J-03
1-PDIS-5285 1-PDIS-5287	2.7 in. H_2O (2.43 to 2.97 in. H_2O)	PENET RM FILT DIFF PRESS HI	

POSSIBLE CAUSES

- Dirty filter
- Both exhaust fans running with flow through only one filter

AUTOMATIC ACTIONS

None

CAUTION

Filter failure could occur if both exhaust fans are running with flow through only one filter.

WARNING

A dirty filter will cause a reduction in exhaust flow which could result in a positive pressure in the Penetration Room. This could result in the spread of radioactive contamination.

(continued)

(continued) **WINDOW** **J-03**

CONDITION	RESPONSE
1. Penetration Room filter high differential pressure.	1. Perform the following: a. **ENSURE** the dampers for the required filter(s) are open. b. **IF** both exhaust fans are running with flow through only one filter **AND** flow can **NOT** be established through the second filter, **THEN SECURE** one exhaust fan. c. **CHECK** Penetration Room Exhaust Filter dP indication locally, 1-PDIS-5285: (1) **IF** dP is greater than 2.7 in. H_2O, **THEN INITIATE** a CR to replace filter(s). d. **REFER** to TS 3.7.12 for operability requirements of Penetration Room filter trains.

ANNUNCIATOR COMPENSATORY ACTIONS

MONITOR differential pressure across the in service Penetration Room filter(s) at least every 6 hours.

REFERENCES

OM-65 (60-723-E) Sh.2 1E-85 (61-085-D) Sh.4A 1E-87 (61-087-E) Sh.7A

DEVICE	SETPOINT	WINDOW	J-04
1-RI-5317A 1-RI-5317B	6 R/hr (2 to 10 R/hr)	CNTMT RAD LVL HI	

POSSIBLE CAUSES

- RCS rupture
- Degraded core configuration
- Gross failed fuel
- Fuel handling incident
- Loss of Refuel Pool level

AUTOMATIC ACTIONS

At 20 R/hr (16 to 24 R/hr) the following MOVs shut:

- H_2 PURGE INBD ISOL, 1-HP-6900-MOV (1-RI-5317A)
- H_2 PURGE OUTBD ISOL, 1-HP-6901-MOV (1-RI-5317B)

CONDITION	RESPONSE
1. Containment radiation level high.	1. Perform the following: a. **CHECK** 1-RI-5317A and 1-RI-5317B on 2C24B to verify alarm conditions. b. **REFER** to applicable portions of the ERPIP. c. **IMPLEMENT** applicable EOP or AOP. d. While in Modes 1-3, **IF** either or both devices are inoperable, **THEN REFER** to TS 3.3.10 **AND** Table 1 of OI-35, Radiation Monitoring System.

(continued)

(continued) **WINDOW** **J-04**

ANNUNCIATOR COMPENSATORY ACTIONS

MONITOR Containment radiation levels at least every 6 hours (2C24B).

REFERENCES

OM-98 (60-738-E) Sh.1 1E-87 (61-087-E) Sh.7A

DEVICE	SETPOINT	WINDOW	J-05
1-PIA-5281 1-PIA-5282	2.0 in H_2O (1.8 to 2.2 in H_2O)	WEST PENET RM PRESS HI	

POSSIBLE CAUSES

- Piping rupture in the West Penetration Room
- High pressure in Containment with a corresponding failure of a Containment Penetration

AUTOMATIC ACTIONS

- Penetration Room Exhaust Fans automatically start on a CIS initiation.
- CVCIS will initiate if pressure rises to 0.43 PSIG (11.9 in. H_2O).

GO TO NEXT PAGE

(continued)

(continued) **WINDOW** **J-05**

WARNING

- High pressure in the West Penetration Room could result in the spread of contamination to the surrounding rooms.
- Danger to personnel could be present due to contamination or steam in the penetration rooms.

CONDITION	RESPONSE
1. High pressure in the West Penetration Room.	1. Perform the following: a. **IF** a piping rupture has occurred within the room, **THEN**: (1) Manually **START** the exhaust fans **PER** the Manual Startup section of OI-22G, Penetration Room Exhaust System. (2) **DETERMINE** the cause **AND ISOLATE** if possible. b. **IF** CIS has initiated, **THEN CHECK** the penetration room exhaust fans have automatically started. c. **IF** CVCIS has actuated, **THEN ENSURE** SHUT L/D STOP, 1-CVC-515-CV and L/D CONTMT ISOL, 1-CVC-516-CV.

ANNUNCIATOR COMPENSATORY ACTIONS

MONITOR West Penetration Room pressure at least hourly.

REFERENCES

OM-65 (60-723-E) Sh.1 1E-85 (61-085-D) Sh.4 1E-87 (61-087-E) Sh.7A

DEVICE	SETPOINT	WINDOW	J-06
1-74W (1K08 or 1K09)	15 PSIG (10 to 20 PSIG)	WEST PENET RM CANISTER PRESS LO	

POSSIBLE CAUSES

One of the electrical penetrations nitrogen pressure low in West Penetration Room.

AUTOMATIC ACTIONS

None

CONDITION	RESPONSE
1. Electrical penetration canister pressure low in West Penetration Room.	1. Perform the following: a. **DETERMINE** canister with alarming condition from local alarm panel (dropped flag in window of local panel). b. **CHECK** local pressure indication of canister in alarm to verify alarm. c. **RECHARGE** canister with nitrogen **PER** Electrical Penetration Canister Nitrogen Operations section of OI-4, Nitrogen Gas System. d. **WHEN** nitrogen pressure within the canister is normal (approximately 25 to 30 PSIG), **THEN RESET** the alarm at the local panel: (1) **RESET** the dropped flag by placing the T-handle switch in DROP RESET. (2) **RESET** the alarm by placing the T-handle switch in SIGNAL RESET.
(continued)	(continued)

(continued)

(continued) **WINDOW** **J-06**

CONDITION	RESPONSE
1. (continued)	1. (continued) e. **IF** the same canister is losing pressure consistently, **THEN ENSURE** a CR is submitted for repair.

ANNUNCIATOR COMPENSATORY ACTIONS

MONITOR pressure indications of penetration canisters in West Penetration Room at least every 6 hours.

REFERENCES

1E-87 (61-087-E) Sh.7A and 25

DEVICE	SETPOINT	WINDOW	J-07
None	None	SPARE	04108 04108

POSSIBLE CAUSES

- None 04108

AUTOMATIC ACTIONS

None 04108

CONDITION	RESPONSE
1. None	

04108

ANNUNCIATOR COMPENSATORY ACTIONS

None 04108

REFERENCES

None 04108

DEVICE	SETPOINT	WINDOW	J-08
1-RIC-5415	• Alert 1.02 x 10^5 μCi/sec • High 1.37 x 10^5 μCi/sec • Instrument Failure	U-1 WIDE RANGE NOBLE GAS MON	

POSSIBLE CAUSES

- Reactor Coolant to Steam Generator leak
- Leakage or rupture of any system containing radioactive liquids, gases, or both outside the Containment (examples: CVCS, RCW, Sampling, Waste Gas)
- Containment Sump valves open
- High background at detector
- Instrument failure

AUTOMATIC ACTIONS

None

(continued)

(continued) **WINDOW** **J-08**

NOTE
In the event of a valid alarm on 1-RIC-5415, Plant Chemistry shall determine the maximum acceptable RMS reading based on wind direction **AND** make a recommendation to the Shift Manager regarding reportability of the release considering current meteorological conditions. To make this determination, the peak RMS reading, current RMS reading, and wind direction (degrees) at the time of the peak RMS reading, must be provided.

CONDITION	RESPONSE
1. Alarm present on the Unit 1 Wide Range Noble Gas Radiation Monitor.	1. Perform the following: a. **DETERMINE** the cause of the alarm, **AND CORRECT** if possible: (1) **REFER** to the Determination of Noble Gas Monitor Status section of OI-48, Wide Range Noble Gas Monitor. b. **IF** alarm is valid, **THEN**: • **NOTIFY** Radiation Safety Supervision • **REFER** to the applicable portions of the ERPIP c. **NOTIFY** Plant Chemistry to obtain a grab sample to verify the alarm, **AND PROVIDE** to Plant Chemistry the following information: • Peak RMS reading • Current RMS reading • Wind direction (degrees) (60 meters) at the time of the peak RMS reading d. **IF** the Wide Range Noble Gas Monitor is inoperable, **THEN CHECK** Main Vent Gaseous Monitor is operable **AND REFER** to TRM 15.3.1 and Table 1 of OI-35, Radiation Monitoring System.
(continued)	(continued)

(continued)

(continued) **WINDOW** **J-08**

CONDITION	RESPONSE
1. (continued)	1. (continued) e. **IF** BOTH the Wide Range Noble Gas Monitor **AND** the Main Vent Gaseous Monitor are inoperable, **THEN NOTIFY** Plant Chemistry to perform grab sampling at least once per 12 hours.

ANNUNCIATOR COMPENSATORY ACTIONS

MONITOR 1-RIC-5415 (Noble Gas Monitor) for alarms at least hourly.

REFERENCES

OM-98 (60-738-E) Sh.2 1E-87 (61-087-E) Sh.7A

DEVICE	SETPOINT	WINDOW	J-09
AAH-1, AAH-2 (either 1C101 or 1C102)	4% H_2 Concentration	H_2 ANALYZER SYS	
Common Failure Relay alarms	Any of the following present: • Low Gas Pressure (20 PSIG) • Cell Failure • Loss of Flow (75 cc/min) • Low Cell Temperature (250 to 275° F)		

POSSIBLE CAUSES

- High H_2 concentration in Containment Atmosphere, RCWRT, or RCWMT
- Common Failure Alarm on local H_2 Analyzer panel, 1C139

AUTOMATIC ACTIONS

None

(continued)

(continued) **WINDOW** **J-09**

NOTE
Switch HS-5, MAIN POWER SWITCH (either 1C101 or 1C102), in OFF will cause any or all of the Common Failure Alarms.

CONDITION	RESPONSE
1. H_2 Analyzer System alarm present.	1. Perform the following: a. **CHECK** H_2 Analyzer panel to determine cause of alarm. b. **IF** high H_2 concentration, **THEN NOTIFY** Plant Chemistry. c. **IF** high Containment H_2 concentration, **THEN REFER** to AOP-2A, Excessive Reactor Coolant Leakage or EOP-5, Loss of Coolant Accident, as applicable. d. **IF** alarm is for other than high H_2, **THEN NOTIFY** Instrument Maintenance. e. **IF** in Mode 1-3 and either or both H_2 Analyzers are inoperable, **THEN REFER** to TS 3.3.10.

ANNUNCIATOR COMPENSATORY ACTIONS

MONITOR H_2 concentration at least every 6 hours, when analyzer is required to be in operation, **AND CHECK** 1C139 for alarms at least every 12 hours.

REFERENCES

Vendor Technical Manual 12-277-24

DEVICE	SETPOINT	WINDOW	J-10
0-TS-5303A (E-W Hallway, 5 ft AB)	105° F (100 to 110° F)	AUX BLDG TEMP HI	
0-TS-5303B (E-W Hallway, 5 ft AB)	105° F (100 to 110° F)		
0-TS-5303C (E-W Hallway, 5 ft AB)	105° F (100 to 110° F)		
1-TS-5300A (MS PEN RM)	155° F (150 to 160° F)		
1-TS-5300B (MS PEN RM)	155° F (150 to 160° F)		
1-TS-5301A (27 ft E PEN RM)	138° F (136 to 140° F)		
1-TS-5301B (45 ft B/D TANK AREA)	118° F (116 to 120° F)		
1-TS-5302A (27 ft W PEN RM)	115° F (110 to 120° F)		
1-TS-5302B (L/D HX RM)	115° F (110 to 120° F)		
1-TS-5436 (E ECCS PP RM)	105° F (100 to 110° F)		
1-TS-5437 (W ECCS PP RM)	105° F (100 to 110° F)		

POSSIBLE CAUSES

- High Energy System(s) rupture:
  - Main Steam
  - Auxiliary Steam
  - Main Feedwater
  - S/G Blowdown
  - CVCS
  - Shutdown Cooling
- Heat generated in the ECCS Pump Room during LOCA or SDC system rupture **[B0101]**
- ECCS Pump Room Air Cooler(s) malfunction
- Malfunction or overloading of the normal ventilation systems during hot weather

AUTOMATIC ACTIONS

None

(continued)

(continued) **WINDOW** **J-10**

CAUTION

- **Rupture of a high energy system may cause flooding in the affected room, which may affect safe shutdown system functions. [B0101]**
- **During SDC operation at higher temperatures, a system rupture may cause actuation of the East ECCS Pump Room sprinkler system which may lead to flooding. [B0101]**

CONDITION	RESPONSE
1. At least one monitored Auxiliary Building temperature exceeds the alarm setpoint.	1. Perform the following: a. **DETERMINE** the source of the alarm by observing local panel 1K12 in the AB 27 ft Switchgear Room. b. **IF** a rupture has occurred, **THEN IMPLEMENT** the appropriate EOP or AOP. c. **IF** the high temperature is in the ECCS Pump Room, **THEN CHECK** for proper operation of the ECCS Pump Room Coolers. (1) **REFER** to OI-22C, ECCS Pump Room Ventilation. d. **CHECK** for correct operation of the normal ventilation system of the affected area. (1) **REFER** to the Operating Instruction (OI) for the affected ventilation system. e. **IF** the normal ventilation is **NOT** working, **THEN NOTIFY** the System Engineer for the Component Cooling System for equipment qualification (EQ) trending purposes.

(continued)

(continued) **WINDOW** **J-10**

ANNUNCIATOR COMPENSATORY ACTIONS

MONITOR Auxiliary Building temperature indications on local panel (27 ft SWGR Room) at least every 6 hours.

REFERENCES

1E-87 (61-087-B) Sh.30, 31 1E-87 (61-087-E) Sh.7A

DEVICE	SETPOINT	WINDOW	J-11
1-TS-5439	100° F (97.5 to 102.5° F)	45' SWGR RM TEMP HI	

POSSIBLE CAUSES

- Loss or malfunction of ventilation, air conditioning
- Fire

AUTOMATIC ACTIONS

None

CONDITION	RESPONSE
1. High temperature in the 45 ft SWGR Room.	1. Perform the following: a. **CHECK** Fire Alarm Panel for other indications of a fire. (1) **IF** a fire is indicated, **THEN IMPLEMENT** the applicable portions of the ERPIP. b. **CHECK** the operating SWGR HVAC unit and associated A/C compressor for proper operation. c. **IF** the operating SWGR HVAC unit has failed, **THEN PLACE** the standby HVAC unit in service **PER** the applicable section of OI-22H, Switchgear Ventilation and Air Conditioning. d. **IF** both SWGR HVAC Refrigeration units have failed **AND** a SWGR HVAC fan is available, **THEN PERFORM** the applicable section of OI-22H, Switchgear Ventilation and Air Conditioning.
(continued)	(continued)

(continued)

(continued) **WINDOW** **J-11**

CONDITION	RESPONSE
1. (continued)	1. (continued) e. **IF** unable to clear this alarm while cooling with a SWGR Fan **AND** no HVAC Refrigeration, **THEN INITIATE** a CR to have System Engineer evaluate the associated fan to determine if it is functioning properly. **[B0796]** f. **IF** the SWGR Room temperature can **NOT** be reduced to less than or equal to 104° F **OR** BOTH HVAC trains are unavailable, **THEN REFER TO** T.S. 3.8.9. **[B0131]** g. **IF** the SWGR Room temperature exceeds Turbine building temperature, **THEN INITIATE** emergency SWGR Room Ventilation **PER** the applicable section of OI-22H, Switchgear Ventilation and Air Conditioning. **[B0131]**

ANNUNCIATOR COMPENSATORY ACTIONS

MONITOR 45 ft SWGR Room temperature at least every 6 hours.

REFERENCES

OM-64 (60-722-E) Sh.2 1E-85 (61-085-D) Sh.9B 1E-87 (61-087-E) Sh.7A

DEVICE	SETPOINT	WINDOW	J-12
1-TS-5438	100° F (97.5 to 102.5° F)	27' SWGR RM TEMP HI	

POSSIBLE CAUSES

- Loss or malfunction of ventilation, air conditioning
- Fire

AUTOMATIC ACTIONS

None

CONDITION	RESPONSE
1. High temperature in the 27 ft SWGR Room.	1. Perform the following: a. **CHECK** Fire Alarm Panel for other indications of a fire. (1) **IF** a fire is indicated, **THEN IMPLEMENT** the applicable portions of the ERPIP. b. **CHECK** the operating SWGR HVAC unit and associated A/C compressor for proper operation. c. **IF** the operating SWGR HVAC unit has failed, **THEN PLACE** the standby HVAC unit in service **PER** the applicable section of OI-22H, Switchgear Ventilation and Air Conditioning. d. **IF** both SWGR HVAC Refrigeration units have failed **AND** a SWGR HVAC fan is available, **THEN PERFORM** the applicable section of OI-22H, Switchgear Ventilation and Air Conditioning.
(continued)	(continued)

(continued)

(continued) **WINDOW** **J-12**

CONDITION	RESPONSE
1. (continued)	1. (continued) e. **IF** unable to clear this alarm while cooling with a SWGR Fan **AND** no HVAC Refrigeration, **THEN INITIATE** a CR to have System Engineer evaluate the associated fan to determine if it is functioning properly. **[B0796]** f. **IF** the SWGR Room temperature can **NOT** be reduced to less than or equal to 104° F **OR** BOTH HVAC trains are unavailable, **THEN REFER TO** T.S. 3.8.9. **[B0131]** g. **IF** the SWGR Room temperature exceeds Turbine building temperature, **THEN INITIATE** emergency SWGR Room Ventilation **PER** the applicable section of OI-22H, Switchgear Ventilation and Air Conditioning. **[B0131]**

ANNUNCIATOR COMPENSATORY ACTIONS

MONITOR 27 ft SWGR Room temperature at least every 6 hours.

REFERENCES

OM-64 (60-722-E) Sh.2 1E-85 (61-085-D) Sh.9B 1E-87 (61-087-E) Sh.7A

DEVICE	SETPOINT	WINDOW	J-13
1-LIA-4144 1-LIA-4145	4 in. (3 to 5 in.) indicated level	CNTMT SUMP LVL HI	

POSSIBLE CAUSES

Leakage from or rupture of a fluid system in the Containment.

AUTOMATIC ACTIONS

None

CONDITION	RESPONSE
1. High level of the Containment Sump.	1. Perform the following: a. **CHECK** the indications listed for Entry Conditions in EOP-5, Loss of Coolant Accident **AND** EOP-4, Excess steam Demand Event. (1) **IF** a Reactor Coolant System or Steam Line Rupture (Excess Steam Demand Event) exists in the Containment, **THEN IMPLEMENT** the applicable EOP. b. **IF** a SRW leak or rupture (in Containment) is suspected, **THEN IMPLEMENT** AOP-7B, Loss of Service Water.

ANNUNCIATOR COMPENSATORY ACTIONS

MONITOR Containment Sump level at least every 6 hours.

REFERENCES

OM-074 (60-731-E) Sh.3 1E-76 (61-076-D) Sh.30 1E-87 (61-087-E) Sh.7A

DEVICE	SETPOINT	WINDOW	J-14
1-LS-5437	5 in. above floor (3 to 7 in. above floor)	EAST ECCS PP RM LVL HI	

POSSIBLE CAUSES

- Rupture of any fluid system in the ECCS Pump Room
- Leakage from the 5 ft elevation through the Component Cooling Room access hatch **[B0101]**
- Improper valve lineup

AUTOMATIC ACTIONS

None

(continued)

(continued) **WINDOW** **J-14**

CAUTION
During Shutdown Cooling operation at elevated temperatures, a system rupture may cause fire system sprinklers to actuate, which may cause greater flooding potential. [B0101]

WARNING
- Flood levels in the room higher than approximately 14 inches may cause electrical hazards.
- Shutdown Cooling System rupture at elevated temperatures will cause excessive room temperatures.

CONDITION	RESPONSE
1. High level in the East ECCS Pump Room.	1. Perform the following: a. **CHECK** East ECCS Pump Room to determine if a line has ruptured. b. **IF** a rupture has occurred, **THEN ISOLATE** the ruptured line, if possible. c. **REFER** to the following AOPs, as applicable: • AOP-3B, Loss of Shutdown Cooling • AOP-7A, Loss of Saltwater Cooling • AOP-7C, Loss of Component Cooling d. **CHECK** ECCS Pump Room sump pumps for proper operation. e. **IF** the MWRT or MWMT does **NOT** show a rise in level, **THEN ENSURE** correct valve lineup from sump pumps to the Miscellaneous Waste Process System **PER** OI-47, Miscellaneous and Equipment Area Drains.
(continued)	(continued)

(continued)

(continued) **WINDOW** **J-14**

CONDITION	RESPONSE
1. (continued)	1. (continued) f. **NOTIFY** Plant Chemistry that the Miscellaneous Waste System may be contaminated with saltwater or Component Cooling water. (1) **IF** directed by Plant Chemistry, **THEN BYPASS** the Miscellaneous Waste Ion Exchanger **PER** OI-17D, Miscellaneous Waste Processing System.

ANNUNCIATOR COMPENSATORY ACTIONS

CHECK East ECCS Pump Room for indications of flooding at least every 6 hours.

REFERENCES

OM-64 (60-722-E) Sh.1 1E-87 (61-087-E) Sh.7A

DEVICE	SETPOINT	WINDOW	J-15
1-LS-5439	5 in. above floor (3 to 7 in. above floor)	WEST ECCS PP RM LVL HI	

POSSIBLE CAUSES

- Rupture of any fluid system in the ECCS Pump Room
- Leakage from the 5 ft elevation through the Component Cooling Room access hatch or Containment Sump valves access to the West ECCS Pump Room **[B0101]**
- Improper valve lineup

AUTOMATIC ACTIONS

None

(continued)

(continued) **WINDOW** **J-15**

CAUTION
Rupture of a high energy system may cause flooding, which may affect safe shutdown system functions. [B0101]

WARNING
Flood levels in the room higher than approximately 14 inches may cause electrical hazards.

CONDITION	RESPONSE
1. High level in the West ECCS Pump Room.	1. Perform the following: a. **CHECK** West ECCS Pump Room to determine if a line has ruptured. b. **IF** a rupture has occurred, **THEN ISOLATE** the ruptured line, if possible. c. **REFER** to the following AOPs, as applicable: • AOP-3B, Loss of Shutdown Cooling • AOP-7A, Loss of Saltwater Cooling • AOP-7C, Loss of Component Cooling d. **CHECK** ECCS Pump Room sump pumps for proper operation. e. **IF** the MWRT or MWMT does **NOT** show a rise in level, **THEN ENSURE** correct valve lineup from sump pumps to the Miscellaneous Waste Process System **PER** OI-47, Miscellaneous and Equipment Area Drains.
(continued)	(continued)

(continued)

(continued) **WINDOW** **J-15**

CONDITION	RESPONSE
1. (continued)	1. (continued) f. **NOTIFY** Plant Chemistry that the Miscellaneous Waste System may be contaminated with saltwater or Component Cooling water. (1) **IF** directed by Plant Chemistry, **THEN BYPASS** the Miscellaneous Waste Ion Exchanger **PER** OI-17D, Miscellaneous Waste Processing System.

ANNUNCIATOR COMPENSATORY ACTIONS

CHECK West ECCS Pump Room for indications of flooding at least every 6 hours.

REFERENCES

OM-64 (60-722-E) Sh.1 1E-87 (61-087-E) Sh.7A

DEVICE	SETPOINT	WINDOW	J-16
1-LS-9838	22 in. (18 to 26 in.) from bottom of sump	MAIN STM HYD AREA SUMP LVL HI	

POSSIBLE CAUSES

High level in the 11 Hydraulic Fluid Waste Sump.

AUTOMATIC ACTIONS

None

CONDITION	RESPONSE
1. High level in the 11 Hydraulic Fluid Waste Sump.	1. **PUMP** the sump into the drums provided **AND NOTIFY** Radiation Plant Support for disposal.

ANNUNCIATOR COMPENSATORY ACTIONS

CHECK level in 11 Hydraulic Fluid Waste Sump at least every 6 hours.

REFERENCES

OM-76 (60-733-E) Sh.3 1E-87 (61-087-E) Sh.7A

DEVICE	SETPOINT	WINDOW	J-17
1-LS-3860 1-LS-3861	3.5 in. (3.25 to 3.75 in.)	CC PP RM LVL HI	

POSSIBLE CAUSES

- Piping rupture or leak from the Component Cooling System or Salt Water System components
- Rupture or leak from the Safety Injection System
- Floor drains blocked

AUTOMATIC ACTIONS

None

(continued)

(continued) **WINDOW** **J-17**

NOTE
High water level in the Component Cooling Room may cause high water level in 11 ECCS Pump Room. **[B0101]**

CAUTION
Component Cooling floor drains drain to the Miscellaneous Waste Receiver Tank (MWRT).

CONDITION	RESPONSE
1. High water level in the Component Cooling Pump Room.	1. Perform the following: a. **INVESTIGATE** source of water, **AND ISOLATE,** if possible. b. **IF** the Component Cooling Room water level is due to a system rupture, **THEN IMPLEMENT** the appropriate AOP as follows: • AOP-3B, Loss of Shutdown Cooling • AOP-7A, Loss of Saltwater Cooling • AOP-7C, Loss of Component Cooling c. **ENSURE** the floor drains are clear. d. **MONITOR** MWRT level.
(continued)	(continued)

(continued) **WINDOW** **J-17**

CONDITION	RESPONSE
1. (continued)	1. (continued) e. **NOTIFY** Plant Chemistry that the Miscellaneous Waste System may be contaminated with saltwater or Component Cooling water. (1) **IF** directed by Plant Chemistry, **THEN BYPASS** the Miscellaneous Waste Ion Exchanger **PER** OI-17D, Miscellaneous Waste Processing System.

ANNUNCIATOR COMPENSATORY ACTIONS

CHECK the Component Cooling Pump Room level at least every 6 hours.

REFERENCES

1E-80 (61-080-C) Sh.11 1E-87 (61-087-E) Sh.7A

DEVICE	SETPOINT	WINDOW	J-18
1-LS-1650 1-LS-1651	5 in. (4.5 to 5.5 in.)	**SRW PP RM LVL HI**	

POSSIBLE CAUSES

- Saltwater system rupture
- Service Water System leak or drain valves open
- Clogged floor drains

AUTOMATIC ACTIONS

None

NOTE
SRW Pump Room water levels of approximately 1 foot 6 inches will render the Motor Driven Aux Feed Pump inoperable **PER** TS 3.7.3 due to flooding. **[B0101]**

CONDITION	RESPONSE
1. High water level in the SRW Pump Room.	1. Perform the following: a. **INVESTIGATE** the source of water **AND ISOLATE,** if possible. b. **IF** the SRW Pump Room water level is due to a system rupture, **THEN IMPLEMENT** the appropriate AOP: • AOP-7A, Loss of Saltwater Cooling • AOP-7B, Loss of Service Water Cooling c. **ENSURE** floor drains are clear. d. **MONITOR** Turbine Building sumps for proper operation.

(continued)

(continued) **WINDOW** **J-18**

ANNUNCIATOR COMPENSATORY ACTIONS

CHECK for water in the SRW Pump Room at least every 6 hours.

REFERENCES

1E-87 (61-087-E) Sh.7A

DEVICE	SETPOINT	WINDOW	J-19
0-PS-7216	47 in. H_2O (45 to 49 in. H_2O)	SEWAGE TRTMT TROUBLE	
High Level Backup Switch	Approximately 42 in.		
ORY0C197/30/12	Loss of power to two of three chemical injection Pumps.		
LS-A27-1/LS-A27-2	120 in.		

POSSIBLE CAUSES

- Sewage Lift Pumps **NOT** operating properly
- Loss of power to the Sewage Treatment Plant (Breaker 52-1507)
- Loss of power to two of three chemical injection pumps
- Sand Filter level high

AUTOMATIC ACTIONS

High Level Backup Switch starts the Lag Sewage Lift Pump.

NOTE

There is an audible alarm at the Sewage Treatment Plant. Depressing the local "silence" button will clear the Control Room alarm.

CAUTION

A violation of the site discharge permit may occur if the cause of an alarm is NOT corrected promptly.

CONDITION	RESPONSE
1. Sewage Treatment alarm present.	1. **NOTIFY** Chemistry Analytical Services or Plant Chemistry Technician.

ANNUNCIATOR COMPENSATORY ACTIONS

CHECK Sewage Treatment level at least every 12 hours.

REFERENCES

82-748-E Sh.2

DEVICE	SETPOINT	WINDOW	J-20
1-LS-9837	43 in. (41 to 45 in.) from bottom of sump	**AFW PP RM SUMP LVL HI**	

POSSIBLE CAUSES

- Failure of level switch (1-LS-9835) to start sump pumps
- Loss of power to both sump pumps (Breakers 52-10337 and 52- 10338)
- Excessive AFW pump seal leakage
- AFW piping rupture

AUTOMATIC ACTIONS

None

CONDITION	RESPONSE
1. High level in AFW Pump Room Sump.	1. Perform the following: a. **IF** sump pumps are **NOT** running, **THEN START** sump pump(s) manually to lower level. b. **IF** AFW piping has ruptured, **THEN**: (1) **ISOLATE** the source of the leakage. **[B0101]** (2) **IF** emergency AFW makeup is required, **THEN PLACE** 13 AFW Pump in service **PER** OI-32A, Auxiliary Feedwater System. (3) **REFER** to TS 3.7.3 inoperable AFW Pump(s).

ANNUNCIATOR COMPENSATORY ACTIONS

CHECK the level in the AFW Pump Room sump at least every 6 hours.

(continued)

(continued) **WINDOW** **J-20**

REFERENCES

OM-76 (60-733-E) Sh.3 1E-87 (61-087-E) Sh.7A 1E-93 (61-093-D) Sh.10

DEVICE	SETPOINT	WINDOW	J-21
1-LS-5463 1-LS-5464	5 in. (4.5 to 5.5 in.) above sump bottom	CNTMT NORMAL SUMP LVL HI	

POSSIBLE CAUSES

- Drains from Containment Air Cooler
- Drains from Reactor Vessel Head washdown area
- Leak or rupture of a fluid carrying system
- Refueling Pool overfill
- Containment Spray Header

AUTOMATIC ACTIONS

None

(continued)

(continued) **WINDOW** **J-21**

NOTE
This will be a frequent alarm when the Containment is open or refueling operations are in progress.

CONDITION	RESPONSE
1. High level of the Containment Normal Sump.	1. Perform the following: a. **DRAIN** the Containment Normal Sump to 12 ECCS Pump Room **PER** OI-17D, Miscellaneous Waste Processing System. b. **IF** in Mode 1, 2, 3 or 4, **THEN LOG** the frequency of draining the Containment Normal Sump: (1) **DETERMINE** if the frequency is equal to or less than 49 minutes, which corresponds to a possible RCS leak rate of equal to or greater than 1 GPM. (2) **IF** the determined frequency is equal to or less than 49 minutes, **THEN CHECK** RCS leak rate using STP O-27-1, Reactor Coolant System Leakage Evaluation.
(continued)	(continued)

(continued)

(continued) **WINDOW** **J-21**

CONDITION	RESPONSE
1. (continued)	1. (continued) c. **EVALUATE** the following AOPs for implementation as appropriate: • AOP-2A, Excessive Reactor Coolant Leakage • AOP-3B, Abnormal Shutdown Cooling Conditions • AOP-3G, Malfunction of Main Feedwater System • AOP-6E, Loss of Unit 1 (Unit 2) Refueling Pool Level • AOP-7B, Loss of Service Water • AOP-7C, Loss of Component Cooling Water d. **REFER** to TS 3.4.13 and 3.4.14.

ANNUNCIATOR COMPENSATORY ACTIONS

- **IF** in Mode 1,2,3 or 4,
  THEN COMPLY with the requirements of TS 3.4.13 and 3.4.14 for an inoperable Containment Sump Level Alarm System

- **IF** Containment is accessible,
  THEN CHECK Normal Containment Sump Level at least every 12 hours

REFERENCES

OM-76 (60-733-E) Sh.4 1E-76 (61-076-C) Sh.18 1E-87 (61-087-E) Sh.7A

DEVICE	SETPOINT	WINDOW	J-22
1-LS-4412 1-LS-4414	3 in. (2 to 4 in.)	CNDSR PIT LVL HI	

POSSIBLE CAUSES

- Rupture of any of the following systems:
  - Circulating Water
  - Condensate
  - Feedwater
  - Service Water
- Overflow of the Miscellaneous Drain Tank
- Failure of the 11, 12, or both TB Clean Area Sump pumps
  - Loss of electrical power to Sump 11 pumps (West Condenser Pit drains):
    - Breakers 52-11642 and 52-11643
  - Loss of electrical power to Sump 12 pumps (East Condenser Pit drains):
    - Breakers 52-11663 and 52-11664
  - Mechanical failure
  - Excessive drainage to pits

AUTOMATIC ACTIONS

None

(continued)

(continued) **WINDOW** **J-22**

CONDITION	RESPONSE
1. High level in the Condenser Pit.	1. Perform the following: a. **INVESTIGATE** the Condenser Pits to determine cause of high level. b. **IF** the Circulating Water System has ruptured, **THEN STOP** the affected Circulating Water Pump(s) **PER** OI-14A, Circulating Water System. **[B0101]** c. **IF** the Condensate or Feedwater System has ruptured, **THEN IMPLEMENT** AOP-3G, Malfunctions of Main Feedwater System. **[B0101]** d. **IF** the Service Water System has ruptured, **THEN IMPLEMENT** AOP-7B, Loss of Service Water. **[B0101]** e. **CHECK** for proper operation of ALL Condenser Pit sump pumps. f. **IF** sump pumps have failed, **THEN INSTALL** and **OPERATE** portable sump pumps, as necessary, to reduce and maintain Condenser Pit level. **[B0101]**

ANNUNCIATOR COMPENSATORY ACTIONS

CHECK for water in the Condenser Pit at least every 6 hours.

REFERENCES

1E-81 (61-081-D) Sh.2 1E-87 (61-087-E) Sh.7A

DEVICE	SETPOINT	WINDOW	J-23
1-LS-5250	Floor level; EL 3 ft. (2 ft. 11.75 in. to 3 ft. 0.25 in.)	INTAKE • SUMP • STRUCTURE LVL HI	
1-LS-9801 2-LS-9803 2-LS-9805	73 in. (70 to 76 in.) sump level		

POSSIBLE CAUSES

- Rupture of a Circulating Water Pump Discharge Expansion Joint
- Rupture of a Saltwater Header
- Failure of Normal Sump Pumps
- Loss of Power to BOTH Sump Pumps in the same sump (Sump 11/12/13) with the associated Loss of Power Relay Alarm Switch in "LPR Alarm Enabled"

AUTOMATIC ACTIONS

None

(continued)

(continued) **WINDOW** **J-23**

NOTE
All Circulating Water Pumps will trip if the level rises to 3.5 inches above floor level.

CONDITION	RESPONSE
1. High level in the Intake Structure.	1. Perform the following: a. **DETERMINE** the source **AND ISOLATE,** if possible. b. **IF** a Circulating Water Pump discharge expansion joint has ruptured, **THEN SHUTDOWN** the appropriate Circulating Water Pump **PER** OI-14A, Circulating Water System. **[B0101]** c. **IF** a Saltwater Header has ruptured, **THEN IMPLEMENT** AOP-7A, Loss of Saltwater Cooling. **[B0101]** d. **CHECK** for proper operation of sump pumps. e. **IF** all CWP's have tripped, **THEN ENSURE** SWCA is secured to 11 **AND** 12 SW HDR's, **PER** OI-29A, Salt Water Chemical Addition System.
(continued)	(continued)

(continued)

(continued) **WINDOW** **J-23**

CONDITION	RESPONSE
2. Loss of Power to Sump Pump(s) (Sump 11/12/13).	2. Perform the following: a. **CHECK** power to Sump Pump(s) • 11 Sump/11 Pump(52-10732) • 11 Sump/12 Pump(52-10733) • 12 Sump/21 Pump(52-20732) • 12 Sump/22 Pump(52-20733) • 13 Sump/21 Pump(52-20734) • 13 Sump/22 Pump(52-20735) b. **IF** power can **NOT** be restored, **THEN OPERATE** the Intake Structure Sumps **PER** OI-47, MISCELLANEOUS AND EQUIPMENT AREA DRAINS.

ANNUNCIATOR COMPENSATORY ACTIONS

CHECK Intake Structure (Unit 1 and 2) for high level conditions at least every 6 hours.

REFERENCES

OM-76 (60-733-E) Sh.3 1E-81 (61-081-D) Sh.2 2E-81 (63-081-D) Sh.2 1E-87 (61-087-E) Sh.7A 1E-93 (61-093) Sh 11 2E-93 (63-093) Sh 11,11A,11B

DEVICE	SETPOINT	WINDOW	J-24
1-LS-5251A 1-LS-5251B 1-LS-5251C 1-LS-5251D	3.5 in. above floor (3.25 to 3.75 in. above floor) 2/4 logic	INTAKE STRUCTURE CH TRIP	

POSSIBLE CAUSES

High water level in the Intake Structure:

- Rupture of a Circulating Water Pump Discharge Expansion Joint
- Rupture of a Saltwater Header
- Failure of Intake Structure sump pumps

AUTOMATIC ACTIONS

The Circulating Water Pumps trip on 2/4 logic of the level switches.

(continued)

(continued) **WINDOW** **J-24**

CONDITION	RESPONSE
1. Flooding of the Intake Structure.	1. Perform the following: a. **IF** the Main Turbine trips, **THEN IMPLEMENT** EOP-0, Post Trip Immediate Actions. b. **IF** the Main Turbine does **NOT** trip, **THEN**: (1) Manually **TRIP** the Reactor. (2) **IMPLEMENT** EOP-0, Post Trip Immediate Actions. c. **ENSURE** the Circulating Water Pumps are tripped. **[B0101]** d. **IF** there are indications of a Salt Water System rupture, **THEN**: **[B0101]** (1) **SHUTDOWN** the affected Saltwater Pump **AND PLACE** the handswitch in PULL TO LOCK. (2) **SHUT** the Sluice Gates for the affected Saltwater Pump. (3) **IMPLEMENT** AOP-7A, Loss of Saltwater System Cooling. e. **SHUTDOWN** the Circulating Water System **PER** OI-14A, Circulating Water System. f. **PUMPDOWN** the water level using the sump pumps, portable pumps, or both, to prevent high level on Unit 2 side. **[B0101]** g. **NOTIFY** Mechanical Maintenance to schedule ALL Saltwater Pumps to have the bearings inspected **AND** repacked. **[B0101] [B0098]**

(continued)

(continued) **WINDOW** **J-24**

ANNUNCIATOR COMPENSATORY ACTIONS

- **IF** Window J-23 is operable **AND** clear,
  THEN no compensatory actions are required

- **IF** Window J-23 is in alarm or inoperable,
  THEN CHECK Intake Structure for high level conditions at least every 6 hours

REFERENCES

1E-81 (61-081-B) Sh.2A 1E-87 (61-087-E) Sh.7A

CALVERT CLIFFS NUCLEAR POWER PLANT

UNIT TWO

2C07-ALM

CHEMICAL & VOLUME CONTROL ALARM MANUAL

REVISION 38

Safety Related

REFERRAL USE

Approval Authority: Kent Mills 3/18/2004
signature/date

Effective Date: 3/19/2004

LIST OF EFFECTIVE PAGES

PAGE NUMBER	REVISION
1-73	38

PROCEDURE ALTERATIONS

PAGE NUMBER	REVISION/CHANGE
21	03805

1.0 PURPOSE

A. This Alarm Manual provides information to the Operator for diagnosis of alarm conditions and recommended actions to mitigate the consequences of the alarm condition.

B. This Alarm Manual provides pre-planned compensatory actions that should be considered for implementation when an alarm is not available.

2.0 APPLICABILITY/SCOPE

This Alarm Manual addresses Control Room annunciator panel 2C07.

3.0 REFERENCES AND DEFINITIONS

3.1 DEVELOPMENTAL REFERENCES

A. Drawings:

1. 2E-87 (63-087-E), Sh.6, Chemical and Volume Control System Control Board 2C07

2. OM-461 (62-730-E), Chemical and Volume Control System

B. NO-1-201, Calvert Cliffs Operating Manual

C. NO-1-206, Alarm Annunciator Control

D. Additional references are listed in the response for each alarm window.

3.2 PERFORMANCE REFERENCES

A. AOP-2A, Excessive Reactor Coolant Leakage

B. AOP-6A, High Reactor Coolant Activity

C. AOP-7D, Loss of Instrument Air

D. OI-1A, Reactor Coolant System and Pump Operations

E. OI-2A, Chemical and Volume Control System

F. OI-2B, CVCS Boration, Dilution and Makeup Operations

G. OI-2C, Concentrated Boric Acid System Operations

H. OI-2D, Purification System Operation

I. OI-44, Boronometer and Process Radiation Monitor

J. STP O-87-2, Borated Water Source 7 Day Operability Verification

K. TRM

L. Technical Specifications

3.3 DEFINITIONS

None

4.0 PREREQUISITES

Specific alarm received or not available.

5.0 PRECAUTIONS

A. Inappropriate actions may result if operational decisions are based solely on single alarms without consideration of associated alarms and instrumentation.

B. In no case does the information contained herein supersede an OP, OI, AOP or EOP.

6.0 PERFORMANCE

A. Upon receipt of an alarm, **DETERMINE** its validity by comparing appropriate indications to the setpoint, if there is one:

B. **IF** multiple alarms are received,
THEN EVALUATE alarms from highest to lowest priority.

> **NOTE**
> The CONDITIONS - RESPONSES are listed in hierarchical order, **NOT** as step by step instructions. Perform the response that applies to the existing condition.

C. **UTILIZING** the information for each alarm:

1. **DIAGNOSE** the condition.

2. **IMPLEMENT** the appropriate EOP or AOP
OR INITIATE appropriate responses.

7.0 POST PERFORMANCE ACTIVITIES

None

8.0 BASES

[B0121] Response to SOER 88-01, Recommendation 1, to provide indication of loss of Instrumentation Air, i.e. alarms.

[B0269] SOER 94-02, Recommendation 4.b. Verify that appropriate monitoring and/or alarm features are available or that other interm compensatory actions are taken when systems that have the potential to affect RCS boron concentration are in an abnormal configuration.

[B0427] SOER 97-01, Recommendation 3.a: Potential Loss of High Pressure Injection and Charging Capability from gas intrusion.

9.0 RECORDS

None

DEVICE	SETPOINT	WINDOW	F-01
2-TIC-221	460° F (454 to 466° F)	REGEN HX OUT TEMP HI	

POSSIBLE CAUSES

- Loss of Charging flow:
  - Charging pump(s) tripped
  - Air Binding **[B0427]**
- Excessive Letdown flow:
  - Pressurizer level too high with maximum unbalanced Letdown flow
  - Alternate Letdown control valve is open with its isolation valve open
  - Improper valve alignment
  - Regenerative HX Letdown Outlet Temperature controller, 2-TIC-221, malfunction
- Letdown Throttle Valve Controller, 2-HIC-110, failure

AUTOMATIC ACTIONS

Letdown Containment Isolation, 2-CVC-515-CV, shuts at 470° F on 2-TIC-221.

(continued)

(continued) **WINDOW** **F-01**

CONDITION	RESPONSE
1. Letdown regenerative heat exchanger outlet temperature high.	1. **PERFORM** the following: a. **IF** Letdown is isolated and operating conditions permit, **THEN SECURE** Charging **PER** OI-2A, Chemical and Volume Control System. b. **IF** Charging is required and the operating charging pump has tripped, **THEN RESTART** a charging pump **PER** OI-2A, Chemical and Volume Control System. c. **IF** Letdown Throttle Valve Controller malfunction is indicated, **THEN TAKE** manual control of 2-HIC-110. d. **RECORD** initiation of Letdown and Charging in Transient Tracking Log, as applicable.
(continued)	(continued)

(continued)

(continued) **WINDOW** **F-01**

CONDITION	RESPONSE
2. Loss of Charging Flow	2. **PERFORM** the following: a. **IF** a CHG PP is air bound as indicated by any of the following conditions, • Fluctuation of motor amps • Fluctuation in pump discharge pressure • Fluctuation in pump discharge flow • Excessive pump noise **THEN VENT** the pump **PER** OI-2A, Chemical and Volume Control System. **[B0427]** b. **IF** Charging is required and the operating charging pump has tripped, **THEN RESTART** a charging pump **PER** OI-2A, Chemical and Volume Control System. c. **RECORD** initiation of Letdown and Charging in Transient Tracking Log, as applicable.

ANNUNCIATOR COMPENSATORY ACTIONS

MONITOR Letdown regenerative heat exchanger outlet temperature at least hourly.

REFERENCES

2E-75 (63-075-D), Sh.40

DEVICE	SETPOINT	WINDOW	F-02
2-ZS-354	2-CVC-354-RV lifted	L/D 2-CVC-354-RV OPENED	

POSSIBLE CAUSES

- Diverting Letdown to WPS with CVCS Diversion to Degas Isolation, 2-CVC-325, shut
- Low Pressure Letdown Relief Valve, 2-CVC-354-RV, lifted
- Letdown Pressure controller, 2-PIC-201, failure
- Excessive Letdown flow

AUTOMATIC ACTIONS

Low Pressure Letdown Relief Valve, 2-CVC-354-RV lifts at a pressure of 200 PSIG (194 to 200 PSIG).

CONDITION	RESPONSE
1. Low Pressure Letdown Relief Valve, 2-CVC-354-RV, lifted.	1. **PERFORM** the following: a. **CHECK** Letdown flow control valves and back pressure regulators for proper operation. b. IF 2-CVC-354-RV fails to reseat, THEN **PERFORM** the following as necessary: • **ATTEMPT** to reseat the relief valve by mechanical agitation • **SECURE** Charging and Letdown **PER** OI-2A, Chemical and Volume Control System

ANNUNCIATOR COMPENSATORY ACTIONS

REFERENCES

None

DEVICE	SETPOINT	WINDOW	F-03
2-TR-4001 2-TR-4002	115° F (110 to 120° F) 185° F (180 to 190° F)	BA CH A HEAT TRACING	

POSSIBLE CAUSES

- Dumping RCW evaporator to BAST(s)
- Loss of power
- High temperature:
  - Defective thermostat
  - Recorder malfunction
- Low temperature:
  - Blown fuse in thermostat
  - Heat tracing failure
  - Defective thermostat
  - Recorder malfunction

AUTOMATIC ACTIONS

None

(continued)

(continued) **WINDOW** **F-03**

CONDITION	RESPONSE
1. Boric acid Channel A heat trace circuit high or low temperature.	1. **PERFORM** the following: (P0048) a. **DETERMINE** which heat trace circuit is in alarm on 2C98C. b. **REFER** to OI-2C, Appendices 1 through 8 as applicable, **OR** the Auxiliary Building Operators Log to determine if the heat trace circuit is required for TRM 15.1.2 and 15.1.3. c. **IF** the heat trace circuit is required by the TRM, **THEN DETERMINE** circuit operability **PER** STP O-87-2, Borated Water Source 7 Day Operability Verification. d. **IF** dumping RCW evaporator to BAST(s), **THEN CHECK** alarm clears following the evolution.

ANNUNCIATOR COMPENSATORY ACTIONS

MONITOR the boric acid heat trace panels at least every six hours.

REFERENCES

2E-96 (63-096-E), Sh.1

DEVICE	SETPOINT	WINDOW	F-04
2-TR-4003 2-TR-4004	115° F (110 to 120° F) 185° F (180 to 190° F)	BA CH B HEAT TRACING	

POSSIBLE CAUSES

- Dumping RCW evaporator to BAST(s)
- Loss of power
- High temperature:
  - Defective thermostat
  - Recorder malfunction
- Low temperature:
  - Blown fuse in thermostat
  - Heat tracing failure
  - Defective thermostat
  - Recorder malfunction

AUTOMATIC ACTIONS

None

(continued)

(continued) **WINDOW** **F-04**

CONDITION	RESPONSE
1. Boric acid Channel B heat trace circuit high or low temperature.	1. **PERFORM** the following: (P0048) a. **DETERMINE** which heat trace circuit is in alarm on 2C99C. b. **REFER** to OI-2C, Appendices 1 through 8 as applicable, **OR** the Auxiliary Building Operators Log to determine if the heat trace circuit is required for TRM 15.1.2 and 15.1.3. c. **IF** the heat trace circuit is required by the TRM, **THEN DETERMINE** circuit operability **PER** STP O-87-2, Borated Water Source 7 Day Operability Verification. d. **IF** dumping RCW evaporator to BAST(s), **THEN CHECK** alarm clears following the evolution.

ANNUNCIATOR COMPENSATORY ACTIONS

MONITOR the boric acid heat trace panels at least every six hours.

REFERENCES

2E-96 (63-096-E), Sh.1

DEVICE	SETPOINT	WINDOW	F-05
2-TIC-224	140° F (138 to 142° F)	L/D HX OUT TEMP HI	

POSSIBLE CAUSES

- Loss of Component Cooling
- Unbalanced Letdown flow
- Letdown High Temperature Bypass Controller, 2-TIC-224, malfunction
- Letdown HX Temperature Controller, 2-TIC-223, malfunction
- Component Cooling high temperature

AUTOMATIC ACTIONS

At 145° F on 2-TIC-224:

- IX Bypass, 2-CVC-520-CV, bypasses the IXs
- Boronometer and Radiation Monitor Isolation, 2-CVC-521-CV, shuts

(continued)

(continued) **WINDOW** **F-05**

CONDITION	RESPONSE
1. Letdown heat exchanger outlet temperature high.	1. **PERFORM** the following: a. **IF** L/D TEMP CONTR valve, 2-CC-223-CV, is in automatic, **THEN PLACE** 2-TIC-223 in MANUAL **AND ADJUST** Letdown heat exchanger outlet temperature to less than or equal to 120° F. b. **IF** L/D TEMP CONTR valve, 2-CC-223-CV, is in manual, **THEN ADJUST** 2-TIC-223 to maintain Letdown heat exchanger outlet temperature to less than or equal to 120° F. c. **IF** Letdown temperature reaches 145° F on 2-TIC-224, **THEN ENSURE** 2-CVC-520-CV bypasses the IXs **AND** 2-CVC-521-CV shuts. d. **MONITOR** RCS for temperature **AND** power changes due to Letdown ion exchanger temperature fluctuations.

ANNUNCIATOR COMPENSATORY ACTIONS

MONITOR Letdown heat exchanger outlet temperature at least hourly.

REFERENCES

2E-75 (63-075-C), Sh.40A

DEVICE	SETPOINT	WINDOW	F-06
2-PDIS-3821	15 PSID (14 to 16 PSID)	L/D HX CCW DIFF PRESS HI	

POSSIBLE CAUSES

High Component Cooling Water flow through Letdown heat exchanger.

AUTOMATIC ACTIONS

None

CONDITION	RESPONSE
1. Letdown heat exchanger Component Cooling Water differential pressure high.	1. **REDUCE** Component Cooling Water flow to Letdown heat exchanger to clear the alarm.

ANNUNCIATOR COMPENSATORY ACTIONS

None

REFERENCES

2E-80 (63-080-D), Sh.16B; OM-452 (62-710-E)

DEVICE	SETPOINT	WINDOW	F-07
2-PIA-215	120 PSIG (115 to 125 PSIG)	RCP CBO PRESS HI	

POSSIBLE CAUSES

- Bleed-off line valve alignment improper:
  - RCP Bleed-off to VCT, 2-CVC-203, shut
  - RCP Bleed-off Outboard Isolation, 2-CVC-505-CV, shut
  - RCP Bleed-off Inboard Isolation, 2-CVC-506-CV, shut
- SIAS signal present
- RCP seal failure

AUTOMATIC ACTIONS

RCP Controlled Bleed-off Relief Valve, 2-CVC-199-RV, will lift at 148 PSIG (144 to 148 PSIG), diverting bleed-off flow to the Reactor Coolant Drain Tank.

CONDITION	RESPONSE
1. RCP controlled bleed-off high pressure.	1. **PERFORM** the following: a. **CHECK** RCP bleed-off valve alignment. b. **CHECK** RCP seals for proper operation **PER** OI-1A, Reactor Coolant System and Pump Operations.

ANNUNCIATOR COMPENSATORY ACTIONS

MONITOR RCP controlled bleed-off header pressure at least hourly.

REFERENCES

2E-75 (63-075-C), Sh.35

DEVICE	SETPOINT	WINDOW	F-08
2-PIA-215	250 PSIG (245 to 255 PSIG)	RCP CBO PRESS HI-HI	

POSSIBLE CAUSES

- Bleed-off line valve alignment improper:
  - RCP Bleed-off to VCT, 2-CVC-203, shut
  - RCP Bleed-off Outboard Isolation, 2-CVC-505-CV, shut
  - RCP Bleed-off Inboard Isolation, 2-CVC-506-CV, shut
- SIAS signal present
- RCP seal failure

AUTOMATIC ACTIONS

RCP Controlled Bleed-off Relief Valve, 2-CVC-199-RV, will lift at 148 PSIG (144 to 148 PSIG), diverting bleed-off flow to the Reactor Coolant Drain Tank.

CONDITION	RESPONSE
1. RCP controlled bleed-off high pressure.	1. **PERFORM** the following: a. **CHECK** RCP bleed-off valve alignment. b. **CHECK** RCP seals for proper operation **PER** OI-1A, Reactor Coolant System and Pump Operations.

ANNUNCIATOR COMPENSATORY ACTIONS

MONITOR RCP controlled bleed-off header pressure at least hourly.

REFERENCES

2E-75 (63-075-C), Sh.35

DEVICE	SETPOINT	WINDOW	F-09
2-PA-201	580 PSIG (568 to 592 PSIG) 420 PSIG (408 to 432 PSIG)	L/D PRESS	

POSSIBLE CAUSES

- High pressure:
  - Improper operation of Letdown Pressure controller, 2-PIC-201
  - Letdown Pressure controller, 2-PIC-201, malfunction
- Low pressure:
  - Improper operation of Letdown Pressure controller, 2-PIC-201
  - Letdown Pressure controller, 2-PIC-201, malfunction
  - Low Pressure Letdown Relief Valve, 2-CVC-354-RV, lifting
  - Letdown System secured

AUTOMATIC ACTIONS

None

(continued)

(continued) **WINDOW** **F-09**

CONDITION	RESPONSE
1. Letdown System high or low pressure.	1. **PERFORM** the following: a. **IF** Letdown Pressure controller, 2-PIC-201, malfunction is indicated, **THEN PLACE** the controller in MANUAL, and **MAINTAIN** Letdown pressure approximately 460 PSIG. b. **IF** L/D RV, 2-CVC-345-RV, has lifted, **THEN MONITOR** RCS leakrate and tail pipe temperature to ensure relief valve has reseated. c. **IF** LP L/D RV, 2-CVC-354-RV, has lifted and fails to reseat, **THEN PERFORM** the following as necessary: • **ATTEMPT** to reseat the relief valve by mechanical agitation • **SECURE** Charging **AND** Letdown **PER** OI-2A, Chemical and Volume Control System • **MONITOR** 12 RCWRT level

ANNUNCIATOR COMPENSATORY ACTIONS

MONITOR Letdown System pressure at least hourly.

REFERENCES

2E-75 (63-075-D), Sh.37

DEVICE	SETPOINT	WINDOW	F-10
2-TIA-225	130° F (128 to 132° F)	VCT TEMP HI	

POSSIBLE CAUSES

- Improper setting on Letdown HX Temperature Controller, 2-TIC-223
- Component Cooling System high temperature
- Unbalanced Letdown flow

AUTOMATIC ACTIONS

None

CONDITION	RESPONSE
1. VCT high temperature.	1. **PERFORM** the following: a. **CHECK** Component Cooling System temperature normal. b. **ENSURE** Charging and Letdown flows are balanced. c. **IF** Letdown HX Temperature Controller malfunction is indicated, **THEN TAKE** manual control of 2-TIC-223. d. **IF** Component Cooling flow has been lost to the Letdown HX, **THEN SECURE** Letdown **PER** OI-2A, Chemical and Volume Control System. 03805

ANNUNCIATOR COMPENSATORY ACTIONS

MONITOR VCT temperature at least hourly.

REFERENCES

(FP 12122-03)

DEVICE	SETPOINT	WINDOW	F-11
2-LA-226	112.5 in. (110.5 to 114.5 in.) 87.5 in. (85.5 to 89.5 in.)	VCT LVL	

POSSIBLE CAUSES

- High level:
  - VCT Inlet, 2-CVC-500-CV, failed to divert to WPS
  - Letdown diverted to WPS with VCT makeup in progress
  - Level Sensing System Failure **[B0427]**
- Low level:
  - VCT automatic makeup did not initiate if aligned
  - Reactor Coolant System inventory loss with VCT makeup in manual
  - Level Sensing System Failure **[B0427]**

AUTOMATIC ACTIONS

- VCT Inlet, 2-CVC-500-CV, diverts to WPS at a VCT level of 108 inches
- VCT Outlet, 2-CVC-501-MOV, shuts and RWT Charging Pump Suction, 2-CVC-504-MOV, opens at a VCT level of 3 inches

(continued)

(continued) **WINDOW** **F-11**

CONDITION	RESPONSE
1. VCT high level.	1. **PERFORM** the following: a. **ENSURE** VCT INL, 2-CVC-500-CV, has diverted to WPS. b. **IF** VCT makeup is in progress, **THEN REDUCE** makeup rate to lower VCT level **OR SECURE** makeup, as applicable.
2. VCT low level.	2. **PERFORM** the following: a. **ENSURE** VCT INL, 2-CVC-500-CV, is **NOT** diverting Letdown to WPS. b. **INITIATE** makeup to the VCT **PER** OI-2B, CVCS Boration, Dilution and Makeup Operations. c. **IF** VCT level reaches 3 inches, **THEN ENSURE** VCT OUT, 2-CVC-501-MOV, shuts and RWT CHG PP SUCT, 2-CVC-504-MOV, opens. **[B0427]** d. **IF** RCS inventory loss is suspected, **THEN IMPLEMENT** AOP-2A, Excessive Reactor Coolant Leakage.

ANNUNCIATOR COMPENSATORY ACTIONS

MONITOR VCT level at least hourly.

REFERENCES

2E-75 (63-075-D), Sh.25

DEVICE	SETPOINT	WINDOW	F-12
2-PIA-225	50 PSIG (48.5 to 51.5 PSIG) 4 PSIG (2.5 to 5.5 PSIG)	VCT PRESS	

POSSIBLE CAUSES

- High pressure:
  - Overcharging of hydrogen or nitrogen
  - Makeup operation in progress
  - VCT level in the upper operating band
- Low pressure:
  - VCT Vent, 2-CVC-513-CV, open
  - VCT level in the lower operating band

AUTOMATIC ACTIONS

None

(continued)

(continued) **WINDOW** **F-12**

NOTE
A VCT Pressure decrease without a corresponding level decrease, when the VCT vent valve is closed, is a possible indication of a level sensing failure. **[B0427]**

CONDITION	RESPONSE
1. VCT high pressure.	1. **PERFORM** the following: a. **ENSURE** VCT hydrogen or nitrogen charging is **NOT** in progress. b. **PERFORM** any of the following to reduce VCT pressure: • **DIVERT** VCT INL, 2-CVC-500-CV, to WPS to lower VCT level • **REDUCE** VCT pressure by venting VCT **PER** OI-2A, Chemical and Volume Control System. **[B0427]**
2. VCT low pressure.	2. **PERFORM** the following: a. **ENSURE** VCT VENT, 2-CVC-513-CV, is shut. b. **RAISE** VCT nitrogen or hydrogen pressure, as applicable. c. **VENT** the idle charging pump(s) **PER** OI-2A, Chemical and Volume Control System. to verify they are **NOT** gas bound. **[B0427]**

ANNUNCIATOR COMPENSATORY ACTIONS

MONITOR VCT pressure at least hourly.

REFERENCES

(FP 12122-05)

DEVICE	SETPOINT	WINDOW	F-13
2-FIA-202	135 GPM (132 to 138 GPM)	L/D FLOW HI	

POSSIBLE CAUSES

- Improper system alignment
- Letdown Throttle Valve controller, 2-HIC-110, malfunction
- Pressurizer level transmitter failed high
- Letdown System pipe rupture

AUTOMATIC ACTIONS

- Letdown Excess Flow Check Valve, 2-CVC-343, may shut at greater than 200 GPM

CONDITION	RESPONSE
1. Letdown high flow.	1. **PERFORM** the following: a. **PLACE** IX BYP, 2-CVC-520-CV, in BYP. b. **IF** L/D **THROTTLE** VLV controller, 2-HIC-110, malfunction is indicated, **THEN PLACE** the controller in MANUAL and **ADJUST** Letdown flow consistent with operating charging pump(s) and Pressurizer level. c. **IF** Letdown flow is pegged high, **THEN SHUT** L/D CNTMT ISOLs, 2-CVC-515-CV and 2-CVC-516-CV, and **MAINTAIN** Pressurizer level by running charging pump(s) as necessary.

ANNUNCIATOR COMPENSATORY ACTIONS

MONITOR Letdown System flow at least hourly.

REFERENCES

(FP 12122-20)

DEVICE	SETPOINT	WINDOW	F-14
2-PDIS-204	20 PSID (19 to 21 PSID)	L/D STRN DIFF PRESS HI	

POSSIBLE CAUSES

- Letdown strainer dirty
- Letdown System high flow rate
- Letdown ion exchanger retention element failure

AUTOMATIC ACTIONS

None

CONDITION	RESPONSE
1. Letdown strainer high differential pressure.	1. **PERFORM** the following: a. **IF** alarm is due to high Letdown flow rates, **THEN TAKE** appropriate actions to reduce Letdown flow consistent with operating charging pump(s) and Pressurizer level. b. **IF** alarm occurred with normal Letdown flow, **THEN PLACE** IX BYP, 2-CVC-520-CV, in BYP. (1) **DETERMINE** if a purification ion exchanger resin retention element failure has occurred by radiological surveys in the area of the basket strainer. (2) **CLEAN** the Letdown strainer as necessary and **RETURN** the purification IXs to service **PER** OI-2D, Purification System Operation.

(continued)

(continued) **WINDOW** **F-14**

ANNUNCIATOR COMPENSATORY ACTIONS

MONITOR the Letdown strainer differential pressure at least every 6 hours.

REFERENCES

None

DEVICE	SETPOINT	WINDOW	F-15
2-PDIS-202	50 PSID (49 to 51 PSID)	PURIF FILT DIFF PRESS HI	

POSSIBLE CAUSES

- Purification filter dirty
- Letdown System high flow rate
- Excessive throttling of purification filter inlet to establish flow through Boronometer and Process Radiation Monitor

AUTOMATIC ACTIONS

None

(continued)

(continued) **WINDOW** **F-15**

CONDITION	RESPONSE
1. Purification filter high differential pressure.	1. **PERFORM** the following: a. **IF** alarm is due to high Letdown flow rates, **THEN TAKE** appropriate actions to reduce Letdown flow consistent with operating charging pump(s) and Pressurizer level. b. **IF** the Boronometer or Process Radiation Monitor is in service, **THEN READJUST** the Boronometer and Process Radiation Monitor flow **PER** OI-44, Boronometer and Process Radiation Monitor, to clear the alarm. c. **IF** the purification filter inlet is full open, **THEN PLACE** the standby filter in service or **OPEN** the L/D FILT BYP, 2-CVC-124, **PER** OI-2D, Purification System Operation. d. **IF** the alarm is VALID **THEN NOTIFY** the System Engineer and **INITIATE** a CR to change the filter.

ANNUNCIATOR COMPENSATORY ACTIONS

MONITOR the purification filter differential pressure at least every 6 hours.

REFERENCES

None

DEVICE	SETPOINT	WINDOW	F-16
2-PDIS-203	50 PSID (48 to 52 PSID)	PURIF IX DIFF PRESS HI	

POSSIBLE CAUSES

- Plugged retention element
- Resin fouled by insolubles

AUTOMATIC ACTIONS

None

CONDITION	RESPONSE
1. Purification ion exchanger high differential pressure.	1. **PERFORM** the following: a. **PLACE** IX BYPASS, 2-CVC-520-CV, in BYP. b. **NOTIFY** Plant Chemistry of problem **AND REQUEST** which ion exchanger to be placed in service. c. **PLACE** ion exchanger designated by Plant Chemistry in service **PER** OI-2D, PURIFICATION SYSTEM OPERATION.

ANNUNCIATOR COMPENSATORY ACTIONS

MONITOR purification ion exchanger differential pressure at least every 6 hours.

REFERENCES

None

DEVICE	SETPOINT	WINDOW	F-17
2-FIA-203	0.5 GPM (0.4 to 0.6 GPM)	RAD MON FLOW LO	

POSSIBLE CAUSES

- Letdown temperature high:
  - Letdown Containment Isolation, 2-CVC-515-CV, shuts at a regenerative heat exchanger outlet temperature of 470° F
  - Radiation Monitor Isolation, 2-CVC-521-CV, shuts at a Letdown heat exchanger outlet temperature of 145° F
- Improper Letdown System alignment
- Changing number of charging pumps in operation
- Process Radiation Monitor piping flow restriction

AUTOMATIC ACTIONS

None

CONDITION	RESPONSE
1. Process Radiation Monitor low flow.	1. **PERFORM** the following: a. **CHECK** Letdown temperatures within normal operating limits. b. **CHECK** local flow indication for actual flow. c. **CHECK** for correct valve alignment. d. **RETURN** Process Radiation Monitor flows to normal **PER** OI-44, as applicable.

ANNUNCIATOR COMPENSATORY ACTIONS

MONITOR Process Radiation Monitor flows at least every 6 hours.

REFERENCES

(FP 12122-17), 63087 Sh 6, 63087 Sh 14P, 62730 Sh 3

DEVICE	SETPOINT	WINDOW	F-18
2-FA-210Y 2-CVC-512-CV (62X) 2-HS-210	1 GPM (0.5 to 1.5 GPM) deviation from setpoint with 2-HS-210 **NOT** in **DILUTE AND** 2-CVC-512-CV **NOT** fully shut	**BA FLOW**	

POSSIBLE CAUSES

- Loss of operating boric acid pump
- Rising backpressure from VCT during makeup
- Boric acid line flow restriction
- Concentrated Boric Acid Flow controller, 2-FIC-210Y, malfunction

AUTOMATIC ACTIONS

None

CONDITION	RESPONSE
1. Boric acid flow low or erratic.	1. **PERFORM** the following: a. **IF** aligned for automatic makeup, **THEN RESTORE** boric acid flow to normal. b. **IF** boric acid flow is low or erratic, **THEN PLACE** CONC BA FLOW controller, 2-FIC-210Y, in MANUAL and manually control makeup. c. **IF** boric acid flow was low or erratic, **THEN MONITOR** the RCS for inadvertent boration or dilution effects. **[B0269]**

(continued)

(continued) **WINDOW** **F-18**

ANNUNCIATOR COMPENSATORY ACTIONS

- **MONITOR** *boric acid flow during automatic makeup evolutions.* **[B0269]**
- Other alarms to help the operator diagnose a dilution event are as follows: **[B0269]**

PANEL	WINDOW	DESCRIPTION
2C05	D-08	HI POWER TRIP
2C05	D-12	POWER LVL HI CH PRE-TRIP
2C05	D-15	POWER LVL RATE HI CH PRE-TRIP
2C05	D-33	S/D MON HI
2C05	D-40	TAVG - TREF
2C06	E-07	21A/21B COLD LEG TEMP HI
2C06	E-08	22A/22B COLD LEG TEMP HI
2C07	F-18	BA FLOW
2C07	F-22	DEMIN WTR FLOW
2C07	F-25	21 BA PP DISCH PRESS LO
2C07	F-37	22 BA PP DISCH PRESS LO

REFERENCES

2E-75 (63-075-D), Sh.46

DEVICE	SETPOINT	WINDOW	F-19
None	None	SPARE	

POSSIBLE CAUSES

None

AUTOMATIC ACTIONS

None

CONDITION	RESPONSE
1. None.	1. None.

ANNUNCIATOR COMPENSATORY ACTIONS

None

REFERENCES

None

DEVICE	SETPOINT	WINDOW	F-20 [B0121]
2-IA-2085-CV (74X)	2-IA-2085-CV shut		

CNTMT IA ISOL
2-IA-2085-CV
CLOSED

POSSIBLE CAUSES

- Instrument Air header pressure less than 75 PSIG downstream of 2-IA-2085-CV
- Containment Instrument Air Isolation, 2-IA-2085-CV, shut either manually or by keyswitch 2-HS-2085

AUTOMATIC ACTIONS

NOTE
Auxiliary Spray isolation, 2-CVC-517-CV, and Loop Charging isolations, 2-CVC-518-CV and 2-CVC-519-CV, are supplied instrument air upstream of 2-IA-2085-CV and are not affected by its closure.

- Letdown Containment Isolations, 2-CVC-515-CV and 2-CVC-516-CV, shut
- Containment Spray Header isolations, 2-SI-4150-CV and 2-SI-4151-CV, open
- Pressurizer Spray valves, 2-RC-100E-CV and 2-RC-100F-CV, shut
- Containment Purge valves, 2-CP-1410-CV and 2-CP-1412-CV, shut
- Plant Air to Containment Isolation, 2-PA-2035-CV, shut

(continued)

(continued) **WINDOW** **F-20 [B0121]**

CONDITION	RESPONSE
1. Containment Instrument Air, 2-IA-2085-CV, shut.	1. **PERFORM** the following: a. **REFER** to AOP-7D, Loss Of Instrument Air. b. **IF** Letdown is lost, **THEN MATCH** Letdown Containment Isolation handswitches with current valve positions. c. **MAINTAIN** Pressurizer level within 15 inches of programmed level, **NOT** to exceed 225 inches, by manual control of Charging System. d. **MANUALLY** operate Pressurizer heaters to maintain RCS pressure 2225 to 2275 PSIA. e. **IF** Pressurizer spray is required, **THEN INITIATE** auxiliary spray, as applicable. f. **IF** containment purge was in progress, **THEN SECURE** the purge alignment. g. **LOG** the initiation of Charging, Letdown and auxiliary spray in the Transient Tracking Log as applicable. h. **EVALUATE** the effect of losing Plant Air to the containment Plant Air stations.

ANNUNCIATOR COMPENSATORY ACTIONS

- **MONITOR** Containment Instrument Air isolation, 2-IA-2085-CV, position at least every 6 hours.

REFERENCES

2E-82 (63-082-C), Sh.7; OM-65 (60-723-E); OM-454 (62-712-E); OM-460 (62-729-E); OM-462 (62-731-E); OM-479 (60-746-E)

DEVICE **SETPOINT** **WINDOW** **F-21**

	Alert	High
2-RY-202-1 (Log)	5E5 CPM	1E6 CPM (Gross)
2-RY-202-2 (Linear)	0.8 CPM	1.0 CPM (I-135)

RAD MON LVL HI

POSSIBLE CAUSES

- Fuel failure
- Crud burst
- Selected isotope high (Iodine 135)
- High radiation source near detector

AUTOMATIC ACTIONS

None

(continued)

(continued) **WINDOW** **F-21**

CONDITION	RESPONSE
1. Radiation monitor high level.	1. **PERFORM** the following: a. **DETERMINE** the RMS alarm validity by checking: • Green FAIL light on the local panel under 2C07 for either the Linear Ratemeter (Selected Isotope) or Log Ratemeter (Gross Activity) is illuminated • Selected scale on the Linear Ratemeter drawer is positioned where indication is greater than 0.1 **NOTE** RI-202 reads out in Counts per Minute, not μCi/gm as used in the Tech Specs. b. **REQUEST** Plant Chemistry to take samples to validate RMS readings. c. **IF** RMS readings are valid, **THEN IMPLEMENT** AOP-6A, High Reactor Coolant Activity.

ANNUNCIATOR COMPENSATORY ACTIONS

IF Rad Monitor is OOS,
THEN NOTIFY Plant Chemistry to sample the RCS per CP-204.

IF Alarm is OOS,
THEN MONITOR Rad Monitor Once per Shift.

REFERENCES

(FP 12122-38), 63087 Sh 14P, 62696 Sh 2, 62730 Sh 3

DEVICE	SETPOINT	WINDOW	F-22
2-FA-210X 2-CVC-512-CV (62X) 2-HS-210	10 GPM (8.0 to 12 GPM) deviation from setpoint with 2-HS-210 **NOT** in **BORATE AND** 2-CVC-512-CV **NOT** fully shut	**DEMIN WTR FLOW**	

POSSIBLE CAUSES

- Loss of operating reactor coolant makeup pump
- Rising backpressure from VCT during makeup
- Makeup Water Flow Controller, 2-FIC-210X, malfunction

AUTOMATIC ACTIONS

None

CONDITION	RESPONSE
1. Reactor coolant makeup water flow low or erratic.	1. **PERFORM** the following: a. **IF** aligned for automatic makeup, **THEN RESTORE** reactor coolant makeup water flow to normal. b. **IF** reactor coolant makeup water flow is low or erratic, **THEN PLACE** M/U WTR FLOW CONTR, 2-FIC-210X, in MANUAL and manually control makeup. c. **IF** reactor coolant makeup water flow was low or erratic, **THEN MONITOR** the RCS for inadvertent boration or dilution effects. **[B0269]**

(continued)

(continued) **WINDOW** **F-22**

ANNUNCIATOR COMPENSATORY ACTIONS

- **MONITOR** reactor coolant makeup water flow during automatic makeup evolutions. **[B0269]**
- Other alarms to help the operator diagnose a dilution event are as follows: **[B0269]**

PANEL	WINDOW	DESCRIPTION
2C05	D-08	HI POWER TRIP
2C05	D-12	POWER LVL HI CH PRE-TRIP
2C05	D-15	POWER LVL RATE HI CH PRE-TRIP
2C05	D-33	S/D MON HI
2C05	D-40	TAVG - TREF
2C06	E-07	21A/21B COLD LEG TEMP HI
2C06	E-08	22A/22B COLD LEG TEMP HI
2C07	F-18	BA FLOW
2C07	F-22	DEMIN WTR FLOW
2C07	F-25	21 BA PP DISCH PRESS LO
2C07	F-37	22 BA PP DISCH PRESS LO

REFERENCES

86-537-E

DEVICE	SETPOINT	WINDOW	F-23
2-LS-207 2-LS-209	103.75 in. (102.75 to 104.75 in.)* from 0 reference at tank 81" indicated at 2-LIA-207/209	BAST(S) LVL LO	

POSSIBLE CAUSES

- Excessive use
- Improper BAST recirculation
- Improper valve alignment

AUTOMATIC ACTIONS

None

CONDITION	RESPONSE
1. 21 or 22 BAST(s) low level.	1. **PERFORM** the following: a. **IF** a BAST in recirculation, **THEN SECURE** recirculation and **CHECK** valve alignment. b. **IF** alarm is **NOT** anticipated due to makeup or borated water transfer evolution, **THEN CHECK** system alignment. c. **IF** required, **THEN MAKEUP** to the affected BAST **PER** OI-2C, Concentrated Boric Acid System Operations. d. **REFER** to TRM 15.1.2 and 15.1.3 for BAST level limitations.

ANNUNCIATOR COMPENSATORY ACTIONS

MONITOR 21 and 22 BASTs level at least hourly.

REFERENCES

2E-75 (63-075-D), Sh.26

DEVICE	SETPOINT	WINDOW	F-24
2-HS-2516A	2-HS-2516A in CLOSE	L/D LINE CNTMT ISOL CV LOCAL AT 2C43	

POSSIBLE CAUSES

Letdown Containment Isolation handswitch, 2-HS-2516A, in CLOSE at 2C43.

AUTOMATIC ACTIONS

Removes control of Letdown Containment Isolation, 2-CVC-516-CV, from the Control Room.

CONDITION	RESPONSE
1. Handswitch 2-HS-2516A in CLOSE at 2C43.	1. **IF** Letdown was isolated, **THEN PERFORM** the following: a. **SHUT** L/D CNTMT ISOL, 2-CVC-515-CV. b. **OPERATE** charging pumps as necessary to maintain Pressurizer level. c. **IF NOT** required to be in CLOSE at 2C43, **THEN RETURN** 2-HS-2516A to NORMAL. d. **RESTORE** Charging and Letdown **PER** OI-2A, Chemical and Volume Control System.

ANNUNCIATOR COMPENSATORY ACTIONS

IF Letdown is lost due to Letdown Containment Isolation, 2-CVC-516-CV, closure, **THEN CHECK** L/D CNTMT ISOL handswitch, 2-HS-2516A, position on 2C43.

REFERENCES

2E-75 (63-075-C), Sh.41

DEVICE	SETPOINT	WINDOW	F-25
2-HS-226 2-LIC-226 2-PS-206	VCT level less than 90 in. (88 to 92 in.) with BA PP SEL SW, 2-HS-226, selecting 21 BA PP to run **AND** 21 BA PP pressure less than 60 PSIG (55 to 65 PSIG)	**21 BA PP AUTO M/U START FAIL**	

POSSIBLE CAUSES

See alarm setpoint section.

AUTOMATIC ACTIONS

None

NOTE
IF 21 Boric Acid Pump is used for VCT makeup and sufficient discharge pressure is **NOT** developed to reset the low pressure switch,
THEN the VCT level must be raised to the high level setpoint (104 in.) to clear the alarm.

CONDITION	RESPONSE
1. Boric acid pump low pressure.	1. **PERFORM** the following: a. **IF** CVCS makeup is in the manual mode of operation, **THEN RESTORE** VCT level to greater than 90 inches as soon as possible. b. **IF** 21 Boric Acid Pump fails to start or develop sufficient discharge pressure, **THEN ATTEMPT** to use 22 Boric Acid Pump for makeup operations. c. **IF** boric acid flow was low or erratic, **THEN MONITOR** the RCS for inadvertent boration or dilution effects. **[B0269]**

(continued)

(continued) **WINDOW** **F-25**

ANNUNCIATOR COMPENSATORY ACTIONS

- **MONITOR** 21 Boric Acid Pump operation during makeup evolutions and VCT level at least hourly. **[B0269]**
- Other alarms to help the operator diagnose a dilution event are as follows: **[B0269]**

PANEL	WINDOW	DESCRIPTION
2C05	D-08	HI POWER TRIP
2C05	D-12	POWER LVL HI CH PRE-TRIP
2C05	D-15	POWER LVL RATE HI CH PRE-TRIP
2C05	D-33	S/D MON HI
2C05	D-40	TAVG - TREF
2C06	E-07	21A/21B COLD LEG TEMP HI
2C06	E-08	22A/22B COLD LEG TEMP HI
2C07	F-18	BA FLOW
2C07	F-22	DEMIN WTR FLOW
2C07	F-25	21 BA PP DISCH PRESS LO
2C07	F-37	22 BA PP DISCH PRESS LO

REFERENCES

2E-75 (63-075-D), Sh.25

DEVICE	SETPOINT	WINDOW	F-26
Time Delay Relays: 2/SA6, 2/226X	N/A	21 BA PP • SIAS BLOCKED • AUTO START	

POSSIBLE CAUSES

- 21 Boric Acid Pump handswitch, 2-HS-226X, in PULL TO LOCK for greater than 5 seconds
- 21 Boric Acid Pump handswitch, 2-HS-226X, in STOP for greater than 5 seconds
- Any start signal to 21 Boric Acid Pump for greater than 1 second and the pump breaker does not close

AUTOMATIC ACTIONS

None

CONDITION	RESPONSE
1. 21 Boric Acid Pump automatic start failure or out of service.	1. **PERFORM** the following: a. **PLACE** 22 Boric Acid Pump in service for makeup operations by selecting 22 BAP with BA PP SEL SW, 2-HS-226. . b. **NOTIFY** Electric Shop to check breaker 52-21406 for proper operation. c. **REFER** to TRM 15.1.2 and 15.1.3 for boric acid pump operability requirements.

ANNUNCIATOR COMPENSATORY ACTIONS

MONITOR 21 Boric Acid Pump for proper operation during automatic starting evolutions.

REFERENCES

2E-75 (63-075-D), Sh.25

DEVICE	SETPOINT	WINDOW	F-27
None	None	SPARE	

POSSIBLE CAUSES

None

AUTOMATIC ACTIONS

None

CONDITION	RESPONSE
1. None.	1. None.

ANNUNCIATOR COMPENSATORY ACTIONS

None

REFERENCES

None

DEVICE	SETPOINT	WINDOW	F-28
2-HS-2505A	2-HS-2505A in CLOSE	RCP CBO CNTMT ISOL CV LOCAL AT 2C43	

POSSIBLE CAUSES

RCP CBO Isolation handswitch, 2-HS-2505A, in CLOSE at 2C43.

AUTOMATIC ACTIONS

- Removes control of RCP Bleed-off Outboard Isolation, 2-CVC-505-CV, from the Control Room
- RCP bleed-off will be aligned to the Reactor Coolant Drain Tank via RCP CBO Relief Isolation, 2-CVC-507-CV, and allowing 2-CVC-199-RV to lift at 148 PSIG (144 to 148 PSIG)

CONDITION	RESPONSE
1. Handswitch 2-HS-2505A in CLOSE at 2C43.	1. **PERFORM** the following: a. **IF NOT** required to be in CLOSE at 2C43, **THEN RETURN** 2-HS-2505A to NORMAL. b. **REESTABLISH** RCP Bleed-off flow to the VCT. c. **MONITOR** Reactor Coolant Pump seal performance for normal operation.

ANNUNCIATOR COMPENSATORY ACTIONS

CHECK handswitch 2-HS-2505A in NORMAL at least once a shift when not required to be operated from 2C43.

REFERENCES

2E-75 (63-075-C), Sh.44

DEVICE	SETPOINT	WINDOW	F-29
2-TIC-206 (Low) 2-TIC-207 (High)	135° F (130 to 140° F)(Low) 165° F (160 to 170° F)(High)	**21 BAST TEMP**	

POSSIBLE CAUSES

- Heater malfunction
- Heaters turned off
- Batching to BAST at too high or low a temperature

AUTOMATIC ACTIONS

None

CONDITION	RESPONSE
1. 21 BAST high or low temperature.	1. **PERFORM** the following: a. **CHECK** 21 BAST Temperature Controller(s) for proper operation. b. **IF** temperature controller(s) malfunction is indicated, **THEN OPERATE** the heaters manually as necessary. c. **REFER** to TRM 15.1.2 and 15.1.3 for operable BAST temperature ranges.

ANNUNCIATOR COMPENSATORY ACTIONS

MONITOR 21 BAST temperature at least every 6 hours.

REFERENCES

2E-75 (63-075-D), Sh.26

DEVICE	SETPOINT	WINDOW	F-30
2-LIA-206	136 in. (134 to 138 in.) 10 in. (8 to 12 in.)	**21 BAST** **•LVL HI** **•LVL LO-LO**	

POSSIBLE CAUSES

- Improper recirculation alignment
- Improper valve alignment
- Local sample valve open
- Excessive batching
- Excessive use
- Condensed fluid in overflow loop seal

AUTOMATIC ACTIONS

None

CONDITION	RESPONSE
1. 21 BAST level high or low.	1. **PERFORM** the following: a. **IF** in recirculation, **THEN SECURE** recirculation and **CHECK** valve alignment. b. **IF** alarm is **NOT** anticipated due to makeup or borated water transfer evolution, **THEN CHECK** system alignment. c. **IF** required, **THEN MAKEUP** to the BAST **PER** OI-2C, Concentrated Boric Acid System Operations. d. **REFER** to TRM 15.1.2 and 15.1.3 for minimum operable BAST levels.

(continued)

(continued) **WINDOW** **F-30**

ANNUNCIATOR COMPENSATORY ACTIONS

MONITOR 21 BAST level during recirculation, makeup and batching evolutions.

REFERENCES

2E-75 (63-075-D), Sh.26

DEVICE	SETPOINT	WINDOW	F-31
2-LA-206	100 in. (LIA-206 indication) (122.75 in. actual)	21 BAST LVL LO	

POSSIBLE CAUSES

- Excessive use
- Improper recirculation alignment
- Improper valve alignment
- Local sample valve open

AUTOMATIC ACTIONS

None

CONDITION	RESPONSE
1. 21 BAST low level.	1. **PERFORM** the following: a. **IF** in recirculation, **THEN SECURE** recirculation and **CHECK** valve alignment. b. **IF** alarm is **NOT** anticipated due to makeup or borated water transfer evolution, **THEN CHECK** system alignment. c. **IF** required, **THEN** MAKEUP to the BAST **PER** OI-2C, Concentrated Boric Acid System Operations. d. **REFER** to TRM 15.1.2 and 15.1.3 for borated water source limitations.

ANNUNCIATOR COMPENSATORY ACTIONS

MONITOR 21 BAST level during recirculation and makeup evolutions.

REFERENCES

None

DEVICE	SETPOINT	WINDOW	F-32
None	None	SPARE	

POSSIBLE CAUSES

None

AUTOMATIC ACTIONS

None

CONDITION	RESPONSE
1. None.	1. None.

ANNUNCIATOR COMPENSATORY ACTIONS

None

REFERENCES

None

DEVICE	SETPOINT	WINDOW	F-33
2-TIC-208 (Low) 2-TIC-209 (High)	135° F (130 to 140° F)(Low) 165° F (160 to 170° F)(High)	**22 BAST TEMP**	

POSSIBLE CAUSES

- Heater malfunction
- Heaters turned off
- Batching to BAST at too high or low a temperature

AUTOMATIC ACTIONS

None

CONDITION	RESPONSE
1. 22 BAST high or low temperature.	1. **PERFORM** the following: a. **CHECK** 22 BAST Temperature Controller(s) for proper operation. b. **IF** temperature controller(s) malfunction is indicated, **THEN OPERATE** the heaters manually as necessary. c. **REFER** to TRM 15.1.2 and 15.1.3 for operable BAST temperature ranges.

ANNUNCIATOR COMPENSATORY ACTIONS

MONITOR 22 BAST temperature at least every 6 hours.

REFERENCES

2E-75 (63-075-D), Sh.26

DEVICE	SETPOINT	WINDOW	F-34
2-LIA-208	136 in. (134 to 138 in.) 10 in. (8 to 12 in.)	22 BAST •LVL HI •LVL LO-LO	

POSSIBLE CAUSES

- Improper recirculation alignment
- Improper valve alignment
- Local sample valve open
- Excessive batching
- Excessive use
- Condensed fluid in overflow loop seal

AUTOMATIC ACTIONS

None

CONDITION	RESPONSE
1. 22 BAST level high or low.	1. **PERFORM** the following: a. **IF** in recirculation, **THEN SECURE** recirculation and **CHECK** valve alignment. b. **IF** alarm is **NOT** anticipated due to makeup or borated water transfer evolution, **THEN CHECK** system alignment. c. **IF** required, **THEN MAKEUP** to the BAST **PER** OI-2C, Concentrated Boric Acid System Operations. d. **REFER** to TRM 15.1 2 and 15.1.3 for minimum operable BAST levels.

(continued)

(continued) **WINDOW** **F-34**

ANNUNCIATOR COMPENSATORY ACTIONS

MONITOR 22 BAST level during recirculation, makeup and batching evolutions.

REFERENCES

2E-75 (63-075-D), Sh.26

DEVICE	SETPOINT	WINDOW	F-35
2-LA-208	100 in. (LIA-208 indication) (122.75 in. actual)	22 BAST LVL LO	

POSSIBLE CAUSES

- Excessive use
- Improper recirculation alignment
- Improper valve alignment
- Local sample valve open

AUTOMATIC ACTIONS

None

CONDITION	RESPONSE
1. 22 BAST low level.	1. **PERFORM** the following: a. **IF** in recirculation, **THEN SECURE** recirculation and **CHECK** valve alignment. b. **IF** alarm is **NOT** anticipated due to makeup or borated water transfer evolution, **THEN CHECK** system alignment. c. **IF** required, **THEN MAKEUP** to the BAST **PER** OI-2C, Concentrated Boric Acid System Operations. d. **REFER** to TRM 15.1.2 and 15.1.3 for borated water source limitations.

ANNUNCIATOR COMPENSATORY ACTIONS

MONITOR 22 BAST level during recirculation and makeup evolutions.

REFERENCES

None

DEVICE	SETPOINT	WINDOW	F-36
None	None	SPARE	

POSSIBLE CAUSES

None

AUTOMATIC ACTIONS

None

CONDITION	RESPONSE
1. None.	1. None.

ANNUNCIATOR COMPENSATORY ACTIONS

None

REFERENCES

None

DEVICE	SETPOINT	WINDOW	F-37
2-HS-226 2-LIC-226 2-PS-208	VCT level less than 90 in. (88 to 92 in.) with BA PP SEL SW, 2-HS-226, selecting 22 BA PP to run **AND** 22 BA PP pressure less than 60 PSIG (55 to 65 PSIG)	**22 BA PP AUTO M/U START FAIL**	

POSSIBLE CAUSES

See alarm setpoint section.

AUTOMATIC ACTIONS

None

NOTE
IF 22 Boric Acid Pump is used for VCT makeup **AND** sufficient discharge pressure is **NOT** developed to reset the low pressure switch,
THEN the VCT level must be raised to the high level setpoint (104 in.) to clear the alarm.

CONDITION	RESPONSE
1. Boric acid pump low pressure.	1. **PERFORM** the following: a. **IF** CVCS makeup is in the manual mode of operation, **THEN RESTORE** VCT level to greater than 90 inches as soon as possible. b. **IF** 22 Boric Acid Pump fails to start or develop sufficient discharge pressure, **THEN ATTEMPT** to use 21 Boric Acid Pump for makeup operations. c. **IF** boric acid flow was low or erratic, **THEN MONITOR** the RCS for inadvertent boration or dilution effects. **[B0269]**

(continued)

(continued) **WINDOW** **F-37**

ANNUNCIATOR COMPENSATORY ACTIONS

- **MONITOR** 22 Boric Acid Pump operation during makeup evolutions **AND** VCT level at least hourly. **[B0269]**
- Other alarms to help the operator diagnose a dilution event are as follows: **[B0269]**

PANEL	WINDOW	DESCRIPTION
2C05	D-08	HI POWER TRIP
2C05	D-12	POWER LVL HI CH PRE-TRIP
2C05	D-15	POWER LVL RATE HI CH PRE-TRIP
2C05	D-33	S/D MON HI
2C05	D-40	TAVG - TREF
2C06	E-07	21A/21B COLD LEG TEMP HI
2C06	E-08	22A/22B COLD LEG TEMP HI
2C07	F-18	BA FLOW
2C07	F-22	DEMIN WTR FLOW
2C07	F-25	21 BA PP DISCH PRESS LO
2C07	F-37	22 BA PP DISCH PRESS LO

REFERENCES

2E-75 (63-075-D), Sh.25

DEVICE	SETPOINT	WINDOW	F-38
Time Delay Relays: 2/SB6, 2/226Y	N/A	22 BA PP • SIAS BLOCKED • AUTO START	

POSSIBLE CAUSES

- 22 Boric Acid Pump handswitch, 2-HS-226Y, in PULL TO LOCK for greater than 5 seconds
- 22 Boric Acid Pump handswitch, 2-HS-226Y, in STOP for greater than 5 seconds
- Any start signal to 22 Boric Acid Pump for greater than 1 second and the pump breaker does not close

AUTOMATIC ACTIONS

None

CONDITION	RESPONSE
1. 22 Boric Acid Pump automatic start failure or out of service.	1. **PERFORM** the following: a. **PLACE** 21 Boric Acid Pump in service for makeup operations by selecting 21 BAP with BA PP SEL SW, 2-HS-226. b. **NOTIFY** Electric Shop to check breaker 52-20406 for proper operation. c. **REFER** to TRM 15.1.2 and 15.1.3 for boric acid pump operability requirements.

ANNUNCIATOR COMPENSATORY ACTIONS

MONITOR 22 Boric Acid Pump for proper operation during automatic starting evolutions.

REFERENCES

2E-75 (63-075-D), Sh.25

DEVICE	SETPOINT	WINDOW	F-39
None	None	SPARE	

POSSIBLE CAUSES

None

AUTOMATIC ACTIONS

None

CONDITION	RESPONSE
1. None.	1. None.

ANNUNCIATOR COMPENSATORY ACTIONS

None

REFERENCES

None

DEVICE	SETPOINT	WINDOW	F-40
2-PDIS-2530	35 PSID (34 to 36 PSID)	RCMU PPS DISCH FILT DIFF PRESS HI	

POSSIBLE CAUSES

Dirty filter elements.

AUTOMATIC ACTIONS

None

CONDITION	RESPONSE
1. RCMU Pumps discharge filter high differential pressure.	1. **IF** continued system operation is required, **THEN** with Plant Chemistry concurrence, **OPEN** RCMW FILT BYP, 2-CVC-317.

ANNUNCIATOR COMPENSATORY ACTIONS

MONITOR RCMW pumps discharge filter differential pressure when operating.

REFERENCES

None

DEVICE	SETPOINT	WINDOW	F-41
2-HS-224X 2/SA 611 (TDPU) 52-2115 POS SW	N/A	**21 CHG PP** **•SIAS BLOCKED** **•AUTO START**	

POSSIBLE CAUSES

- 21 Charging Pump handswitch, 2-HS-224X, in PULL TO LOCK
- Any start signal to 21 Charging Pump for 1 second and the pump breaker does not close
- 21 Charging Pump breaker, 52-2115, not racked in

AUTOMATIC ACTIONS

None

CONDITION	RESPONSE
1. 21 Charging Pump automatic start failure or out of service.	1. **PERFORM** the following: a. **IF** 21 Charging Pump does **NOT** start, **THEN START** another charging pump as applicable. b. **IF** 21 Charging Pump is out of service, **THEN REFER** to TRM 15.1.2 and 15.1.3 for charging pump availability requirements.

ANNUNCIATOR COMPENSATORY ACTIONS

MONITOR 21 Charging Pump performance during pump starting evolutions.

REFERENCES

2E-75 (63-075-D), Sh.23

DEVICE	SETPOINT	WINDOW	F-42
2-HS-224Y 2/SB 612 (TDPU) 52-2415 POS SW	N/A	**22 CHG PP** **• SIAS BLOCKED** **• AUTO START**	

POSSIBLE CAUSES

- 22 Charging Pump handswitch, 2-HS-224Y, in PULL TO LOCK
- Any start signal to 22 Charging Pump for 1 second and the pump breaker does not close
- 22 Charging Pump breaker, 52-2415, not racked in

AUTOMATIC ACTIONS

None

CONDITION	RESPONSE
1. 22 Charging Pump automatic start failure or out of service.	1. **PERFORM** the following: a. **IF** 22 Charging Pump does **NOT** start, **THEN START** another charging pump as applicable. b. **IF** 22 Charging Pump is out of service, **THEN REFER** to TRM 15.1.2 and 15.1.3 for charging pump availability requirements.

ANNUNCIATOR COMPENSATORY ACTIONS

MONITOR 22 Charging Pump performance during pump starting evolutions.

REFERENCES

2E-75 (63-075-D), Sh.23A

DEVICE	SETPOINT	WINDOW	F-43
2-HS-224Z 2/SA 613 (TDPU) 2/SB 613 (TDPU)	N/A	**23 CHG PP** **•SIAS BLOCKED** **•AUTO START**	

POSSIBLE CAUSES

- 23 Charging Pump handswitch, 2-HS-224Z, in PULL TO LOCK
- Any start signal to 23 Charging Pump for 1 second and the pump breaker does not close

AUTOMATIC ACTIONS

None

CONDITION	RESPONSE
1. 23 Charging Pump automatic start failure or out of service.	1. **PERFORM** the following: a. **IF** 23 Charging Pump does **NOT** start, **THEN START** another charging pump as applicable. b. **IF** 23 Charging Pump is out of service, **THEN REFER** to TRM 15.1.2 and 15.1.3 for charging pump availability requirements.

ANNUNCIATOR COMPENSATORY ACTIONS

MONITOR 23 Charging Pump performance during pump starting evolutions.

REFERENCES

2E-75 (63-075-D), Shs.23C, 23D

DEVICE	SETPOINT	WINDOW	F-44
52-2104 52-2404 89-2104 89-2404 89-2104 KS 89-2404 KS 89-2104A 89-2404A 89-2104A KS 89-2404A KS	N/A	**23 CHG PP BKR L/U IMPR**	

POSSIBLE CAUSES

Breaker or disconnect alignment improper.

AUTOMATIC ACTIONS

Either disconnect, 89-2104A or 89-2404A, will cause alarm when unlocked.

CONDITION	RESPONSE
1. 23 Charging Pump electrical alignment improper.	1. **PERFORM** the following: a. **PLACE** 23 CHG PP handswitch, 2-HS-224Z, in PULL TO LOCK and **CHECK** electrical alignment. b. **CHECK** disconnects 89-2104A and 89-2404A locked in their proper positions. c. **IF** 23 Charging Pump power supply is being changed, **THEN CHECK** annunciator clear following completion of transfer.

ANNUNCIATOR COMPENSATORY ACTIONS

CHECK 23 Charging Pump electrical alignment correct when not in operation at least every 6 hours.

REFERENCES

2E-75 (63-075-D), Shs.23A, 23B, 23C, 23D, 23E, 23F

DEVICE	SETPOINT	WINDOW	F-45
2-FIA-212 2-PIA-212	25 GPM (22 to 28 GPM) 2000 PSIG (1950 to 2050 PSIG)	CHG HDR •FLOW LO •PRESS LO	

POSSIBLE CAUSES

- Loss of charging pump(s): **[B0427]**
  - Backup Charging Pump Select switch in wrong position for desired pump
  - Low charging pump suction pressure trip
  - Charging pump motor overload
  - Engineered Safety Features load shed
- Charging pump(s) discharge relief valve lifting **[B0427]**
- Plant cooldown and depressurization
- Charging pump(s) gas bound **[B0427]**
- Charging header pipe rupture
- Failed/Degraded Discharge Desurger

AUTOMATIC ACTIONS

None

(continued)

(continued) **WINDOW** **F-45**

CONDITION	RESPONSE
1. Charging is lost.	1. **PERFORM** the following: a. **IF** available, **THEN START** another charging pump. b. **IF** Letdown is in service **AND** Charging can **NOT** be reestablished, **THEN SECURE** Letdown. c. **IF** charging pump(s) are gas bound, **THEN VENT** pump(s) per Venting Charging Pump Suction Desurger and Fluid Cylinder for PE 2-41-11-O-D section of OI-2A, Chemical and Volume Control System. **[B0427]** d. **IF** charging header pipe rupture is suspected, **THEN IMPLEMENT** AOP-2A, Excessive Reactor Coolant Leakage. e. **REFER** to TRM 15.1.2 and 15.1.3 for charging pump availability requirements.

ANNUNCIATOR COMPENSATORY ACTIONS

MONITOR Charging System operation at least hourly.

REFERENCES

2E-75 (63-075-D), Sh.23B

DEVICE	SETPOINT	WINDOW	F-46
2-LC-227 (63X)	3 in. (2 to 4 in.)	CHG PP SUCT FROM RWT	

POSSIBLE CAUSES

- Low-Low VCT level
- 2-LC-227 malfunction

AUTOMATIC ACTIONS

- RWT Charging Pump Suction, 2-CVC-504-MOV, opens
- VCT Outlet, 2-CVC-501-MOV, shuts

NOTE
Shifting charging pump suction from the VCT to the RWT while at power will cause a rapid reactor shutdown due to boration.

CONDITION	RESPONSE
1. Volume Control Tank low-low level.	1. **PERFORM** the following: **[B0427]** a. **ENSURE** RWT CHG PP SUCT, 2-CVC-504-MOV, open. b. **ENSURE** VCT OUT, 2-CVC-501-MOV, shut. c. **IF** necessary, **THEN** MAKEUP to the VCT **PER** OI-2B, CVCS Boration, Dilution and Makeup Operations.

ANNUNCIATOR COMPENSATORY ACTIONS

MONITOR VCT level at least hourly.

REFERENCES

2E-75 (63-075-D), Sh.31

DEVICE	SETPOINT	WINDOW	F-47
2-LIA-233X 2-LIA-233Y 2-LIA-233Z	3.75 in. (3.25 to 4.25 in.) above bottom of inside casting	CHG PP(S) OIL LVL LO	

POSSIBLE CAUSES

Leak in oil system.

AUTOMATIC ACTIONS

None

CONDITION	RESPONSE
1. Charging pump(s) oil level low.	1. **PERFORM** the following: a. **DETERMINE** which charging pump(s) has the low oil level condition. b. **PLACE** another charging pump in service as applicable. c. **IF** oil is required, **THEN ENSURE** the applicable charging pump(s) are secured prior to adding oil.

ANNUNCIATOR COMPENSATORY ACTIONS

MONITOR charging pumps oil level at least every 6 hours.

REFERENCES

2E-75 (63-075-D), Shs.23, 23A, 23C

DEVICE	SETPOINT	WINDOW	F-48
2-LS-235X 2-LS-235Y 2-LS-235Z	9.5 in. (8.5 to 10.5 in.) from bottom of tank (with pump running or breaker racked out)	**CHG PP(S) PACKING COOLANT LVL LO**	

POSSIBLE CAUSES

- Excessive packing coolant system leakage
- Evaporation

AUTOMATIC ACTIONS

Annunciator clears when applicable charging pump(s) are secured.

CONDITION	RESPONSE
1. Charging pump Seal Water Tank low level.	1. **PERFORM** the following: a. **DETERMINE** which charging pump(s) has the low Seal Water Tank level. b. **IF** unable to refill the Seal Water Tank, **THEN SHIFT** to another charging pump. c. **IF** Charging is required, **THEN** the affected charging pump(s) may be used for emergencies until the Seal Water Tank is refilled. d. **FILL** the applicable charging pump(s) Seal Water Tank with demineralized water. e. **IF** alarm is due to an OOS charging pump, **THEN MONITOR** operating pump(s) Seal Water Tank level at least every 6 hours.

(continued)

(continued) **WINDOW** **F-48**

ANNUNCIATOR COMPENSATORY ACTIONS

MONITOR charging pumps Seal Water Tank level at least every 6 hours.

REFERENCES

2E-75 (63-075-D), Shs.23, 23A, 23C, 23D