US-APWR DCD Tier 1 Enhancement Project

Tuesday 3/15 AM Handout 3

Table of Contents

Section Title	Handout Page Number
2.7.6.7 Process and Post-accident Sampling System (PSS)	
Section 2.7.6.7 Mark-up	2
Section 2.7.6.7 Basis Document	19
2.4.6 Chemical and Volume Control System (CVCS)	
Section 2.4.6 Mark-up	25
Section 2.4.6 Basis Document	54

2.7.6.7 Process and Post-accident Sampling System (PSS)

2.7.6.7.1 Design Description

~~**System Purpose and Functions**~~

~~These~~The PSS~~ systems~~ contains equipment to collect ~~representative~~ samples of the various process fluids (liquid and gaseous) ~~in a safe and convenient manner~~ during normal and post-accident conditions ~~and provides the means~~ to monitor ~~the unit and~~ various ~~system~~ conditions using the collected and analyzed samples. ~~These systems include sample lines, pressure reduction valves, sample heat exchangers, sampling units and automatic analysis equipment.~~ A B

The PSS serves no safety function, and therefore has no safety design basis, except for providing containment isolation. The containment isolation function is described in Subsection 2.11.2.

~~**Location and Functional Arrangement**~~ C

~~The PSS is located in the auxiliary building, reactor building, access control building and turbine building.~~

1. The functional arrangement of the ~~containment isolation capabilities of the~~ PSS is as described in the Design Description of Subsection 2.7.6.7.1 and in Table 2.7.6.7-2, and as shown ~~on~~ in Figure 2.7.6.7-1. D

~~**Key Design Features**~~ E

~~The PSS is designed to cool and depressurize samples collected at high temperature and high pressure, ensure that containment isolation is not violated while collecting samples following an accident. The PSS permits the collection of liquid and gas samples from various locations during normal plant operation.~~

~~The PSS is also designed to obtain post-accident liquid and gaseous samples following the accident for the purpose of analyzing the post-accident conditions to augment the monitoring capability in the long term.~~

~~**Seismic and ASME Code Classifications**~~ F

~~The seismic and ASME code classifications of the containment isolation components and piping for the PSS are identified in Table 2.7.6.7-1 and Table 2.7.6.7-3. The ASME Code Section III requirements for system components and piping are also identified in Table 2.7.6.7-1 and Table 2.7.6.7-3. Pressure boundary welds in ASME Code Section III components and piping meet ASME Code Section III requirements.~~

2.a.i The ASME Code Section III components of the PSS identified in Table 2.7.6.7-1 are fabricated, installed, and inspected in accordance with ASME Code Section III requirements. G

2.a.ii The ASME Code Section III components of the PSS identified in Table 2.7.6.7-1 are reconciled with the design requirements. G

2.b.i The ASME Code Section III piping of the PSS, including supports, identified in Table 2.7.6.7-3, is fabricated, installed, and inspected in accordance with ASME Code Section III requirements.

2.b.ii The ASME Code Section III piping of the PSS, including supports, identified in Table 2.7.6.7-3 is reconciled with the design requirements.

3.a Pressure boundary welds in ASME Code Section III components identified in Table 2.7.6.7-1 meet ASME Code Section III requirements for non-destructive examination of welds. H

3.b Pressure boundary welds in ASME Code Section III piping identified in Table 2.7.6.7-3 meet ASME Code Section III requirements for non-destructive examination of welds.

4.a The ASME Code Section III components, identified in Table 2.7.6.7-1, retain their pressure boundary integrity at their design pressure.

4.b The ASME Code Section III piping, identified in Table 2.7.6.7-3, retains its pressure boundary integrity at its design pressure.

5.a The seismic Category I equipment identified in Table 2.7.6.7-1 can withstand seismic design basis loads without loss of safety function.

5.b The seismic Category I piping, including supports, identified in Table 2.7.6.7-3 can withstand seismic design basis loads without a loss of its safety function.

6.a The Class 1E equipment identified in Table 2.7.6.7-1 as being qualified for a harsh environment can withstand the environmental conditions that would exist before, during, and following a design basis event without loss of safety function for the time required to perform the safety function. I

6.b Class 1E equipment, identified in Table 2.7.6.7-1, is powered from its respective Class 1E division. J

6.c Separation is provided between redundant divisions of PSS Class 1E cables, and between Class 1E cables and non-Class 1E cables.

7. Deleted. X

8. The PSS provides the capability of obtaining reactor coolant and containment atmosphere samples. K

9. The motor operated valves, air-operated valves and check valves, identified in Table 2.7.6.7-1, perform an active safety function to change position as indicated in the table. L

10.a Controls are provided in the MCR to open and close the remotely operated valves identified in Table 2.7.6.7-1. M

10.b The valves identified in Table 2.7.6.7-1 as having PSMS control perform an active safety function after receiving a signal from PSMS. N

11. After loss of motive power, the remotely operated valves identified in Table 2.7.6.7-1 assume the indicated loss of motive power position.

12. Alarms and displays identified in Table 2.7.6.7-4 are provided in the MCR. O

13. Alarms, displays and controls identified in Table 2.7.6.7-4 are provided in the RSC. Y

~~**System Operation**~~

~~The PSS is manually initiated and adjusting the sample conditions for collecting the samples and collects the liquid and gaseous samples during normal operation and post accident.~~ P

~~**Alarms, Displays, and Controls**~~

~~The valves identified in table 2.7.6.7-1 as having PSMS control perform an active safety function after receiving a signal from PSMS. Table 2.7.6.7-4 identifies the alarms, displays and controls associated with the PSS that are located in the MCR.~~

~~**Logic**~~

~~The containment isolation valves in the PSS operate properly with receipt of a containment isolation signal as described in Subsection 2.11.1.~~

~~**Interlocks**~~

~~There are no interlocks needed for direct safety functions related to the PSS.~~

~~**Class 1E Electrical Power Sources and Divisions**~~

~~The PSS equipment identified in Table 2.7.6.7-1 as Class 1E is powered from their respective Class 1E divisions, and separation is provided between Class 1E divisions, and between Class 1E divisions and non-Class 1E cable.~~

~~**Equipment to be Qualified for Harsh Environments**~~

~~The equipment identified in Table 2.7.6.7-1 as being qualified for a harsh environment can withstand the environmental conditions that would exist before, during, and following a design basis accident without loss of safety function for the time required to perform the safety function.~~

~~**Interface Requirements**~~

~~There are no safety-related interfaces with systems outside of the certified design.~~

~~**Numeric Performance Values**~~

~~Not applicable.~~

2.7.6.7.2 Inspections, Tests, Analyses, and Acceptance Criteria

Table 2.7.6.7-5 describes the ITAAC for process and post-accident sampling system.

The ITAAC associated with the PSS ~~equipment,~~ components, and piping ~~and~~ that comprise a portion of the CIS are described in Table 2.11.2-2.

Table 2.7.6.7-1 Process and Post-accident Sampling System Equipment Characteristics

Equipment Name	Tag No.	ASME Code Section III Class	Seismic Category I	Remotely Operated Valve	Class 1E/ Qual. For Harsh Envir.	PSMS Control	Active Safety Function	Loss of Motive Power Position
Isolation valves on RHR down stream of containment spray and residual heat removal heat exchanger	PSS-MOV-052A,B,C,D	2	Yes	Yes	Yes / No	—	Transfer Closed	As Is
Containment isolation valves inside CV on sample from RCS Hot Leg	PSS-MOV-013,023	2	Yes	Yes	Yes/Yes	Containment Isolation Phase A	Transfer Closed	As Is
Containment isolation valves outside containment on sample from RCS Hot Leg	PSS-MOV-031A,B	2	Yes	Yes	Yes/ No	Containment Isolation Phase A	Transfer Closed	As Is
Containment isolation valve outside CV on post-accident liquid sample return to containment sump	PSS-MOV-071	2	Yes	Yes	Yes/ No	Containment Isolation Phase A	Transfer Closed	As Is
Containment isolation valve inside CV on post-accident liquid sample return to containment sump	PSS-VLV-072	2	Yes	No	— / —	—	Transfer Closed	—
Containment isolation valve inside CV on gas sample from Pressurizer	PSS-AOV-003	2	Yes	Yes	Yes/Yes	Containment Isolation Phase A	Transfer Closed	Closed
Containment isolation valve inside CV on liquid sample from Pressurizer	PSS-MOV-006	2	Yes	Yes	Yes/Yes	Containment Isolation Phase A	Transfer Closed	As Is
Containment isolation valves inside CV on sample from Accumulator	PSS-AOV-062A,B,C,D	2	Yes	Yes	Yes /Yes	Containment Isolation Phase A	Transfer Closed	Closed
Containment isolation valve outside CV on sample from Accumulator	PSS-AOV-063	2	Yes	Yes	Yes /No	Containment Isolation Phase A	Transfer Closed	Closed

Note: Dash (-) indicates not applicable

Table 2.7.6.7-2 Process and Post-accident Sampling System Location of the Equipment

System and Components	Location
Isolation valves on RHR downstream of containment spray and residual heat removal heat exchanger	Reactor Building
Containment isolation valves inside CV on sample from RCS Hot Leg	Containment
Containment isolation valves outside containment on sample from RCS Hot Leg	Reactor Building
Containment isolation valve outside CV on post-accident liquid sample return to containment sump	Reactor Building
Containment isolation valve inside CV on post-accident liquid sample return to containment sump	Containment
Containment isolation valve inside CV on gas sample from Pressurizer	Containment
Containment isolation valve inside CV on liquid sample from Pressurizer	Containment
Containment isolation valves inside CV on sample from Accumulator	Containment
Containment isolation valve outside CV on sample from Accumulator	Reactor Building

Table 2.7.6.7-3 Process and Post-accident Sampling System Piping Characteristics

Pipe Line Name	ASME Code Section III Class	Seismic Category I
Accumulator sampling piping and valves from accumulator up to and including the outermost containment isolation valve PSS-AOV-063	2	Yes
Hot leg sampling piping and valves from hot leg up to and including the outermost containment isolation valve PSS-MOV-031A,B	2	Yes
Pressurizer liquid sampling piping and valves from hot leg up to and including the outermost containment isolation valve PSS-MOV-031A,B	2	Yes
Containment isolation valves PSS-MOV-071and PSS-VLV-072 and piping between them	2	Yes
RHS loop sampling piping and valves up to and including the valves PSS-MOV-052A,B,C,D	2	Yes

Table 2.7.6.7-4 Process and Post-accident Sampling System Equipment Alarms, Displays, and Control Functions

Equipment/Instrument Name	MCR/RSC Alarm	MCR Display	MCR/RSC Control Function	RSC Display
Containment isolation valve inside CV on gas sample from Pressurizer (PSS-AOV-003)	No	Yes	Yes	Yes
Containment isolation valve inside CV on liquid sample from Pressurizer (PSS-MOV-006)	No	Yes	Yes	Yes
Containment isolation valves inside CV on sample from RCS Hot Leg (PSS-MOV-013, 023)	No	Yes	Yes	Yes
Containment isolation valves outside containment on sample from RCS Hot Leg (PSS-MOV-031 A,B)	No	Yes	Yes	Yes
Containment isolation valves inside CV on sample from Accumulator (PSS-AOV-062A,B,C,D)	No	Yes	Yes	Yes
Containment isolation valve outside CV on sample from Accumulator (PSS-AOV-063)	No	Yes	Yes	Yes
Containment isolation valve outside CV on post-accident liquid sample return to containment sump (PSS-MOV-071)	No	Yes	Yes	Yes
Isolation valves on RHR down stream of containment spray and residual heat removal heat exchanger (PSS-MOV-052A,B,C,D)	No	Yes	Yes	Yes

Table 2.7.6.7-5 Process and Post-accident Sampling System Inspections, Tests, Analyses, and Acceptance Criteria (Sheet 1 of 6)

Design Commitment	Inspections, Tests, Analyses	Acceptance Criteria
1. The functional arrangement of the PSS is as described in the Design Description of Subsection 2.7.6.7.1 and in Table2.7.6.7-2 and as shown in Figure 2.7.6.7-1.	1. ~~An i~~Inspection of the as-built PSS will be performed.	1. The as-built PSS conforms ~~with~~ to the functional arrangement as described in Design Description of ~~this~~ Subsection 2.7.6.7.1 and in Table 2.7.6.7-2 and as shown in Figure 2.7.6.7-1.
2.a.i The ASME Code Section III components of the PSS identified in Table 2.7.6.7-1 are fabricated, installed, and inspected in accordance with ASME Code Section III requirements.	2.a.i ~~An i~~Inspection of the as-built ASME Code Section III components of the PSS identified in Table 2.7.6.7-1 will be performed.	2.a.i The ASME Code Section III data report(s) (certified, when required by ASME Code) and inspection reports (including N-5 Data Reports where applicable) exist and conclude that the as-built ASME Code Section III components of the PSS identified in Table 2.7.6.7-1 are fabricated, installed, and inspected in accordance with ASME Code Section III requirements.
2.a.ii The ASME Code Section III components of the PSS identified in Table 2.7.6.7-1 are reconciled with the design requirements.	2.a.ii A reconciliation analysis of the components identified in Table 2.7.6.7-1 using as-designed and as-built information and ASME Code Section III design report(s) (NCA-3550) will be performed.	2.a.ii The ASME Code Section III design report(s) (certified, when required by ASME Code) exist and conclude that design reconciliation has been completed in accordance with the ASME Code, for the as-built ASME Code Section III components of the PSS identified in Table 2.7.6.7-1. ~~the as-built ASME Code Section III components of the PSS identified in Table 2.7.6.7-1 are reconciled with the design requirements~~. The report documents the results of the reconciliation analysis.

Table 2.7.6.7-5 Process and Post-accident Sampling System Inspections, Tests, Analyses, and Acceptance Criteria (Sheet 2 of 6)

Design Commitment	Inspections, Tests, Analyses	Acceptance Criteria
2.b.i The ASME Code Section III piping of the PSS, including supports, identified in Table 2.7.6.7-3, is fabricated, installed, and inspected in accordance with ASME Code Section III requirements	2.b.i ~~An i~~Inspection of the as-built ASME Code Section III piping of the PSS, including supports, identified in Table 2.7.6.7-3, will be performed.	2.b.i The ASME Code Section III data report(s) (certified, when required by ASME Code) and inspection reports (including N-5 Data Reports where applicable) exist and conclude that the as-built ASME Code Section III piping of the PSS, including supports, identified in Table 2.7.6.7-3 is fabricated, installed, and inspected in accordance with ASME Code Section III requirements.
2.b.ii The ASME Code Section III piping of the PSS, including supports, identified in Table 2.7.6.7-3 is reconciled with the design requirements	2.b.ii A reconciliation analysis of the piping of the PSS, including supports, identified in Table 2.7.6.7-3, using as-designed and as-built information and ASME Code Section III design report(s) (NCA-3550) will be performed.	2.b.ii The ASME Code Section III design report(s) (certified when required by ASME Code) exist and conclude that design reconciliation has been completed in accordance with the ASME Code, for the as-built ASME Code Section III piping of the PSS, including supports, identified in Table 2.7.6.7-3 ~~is reconciled with the design requirements~~. The report documents the results of the reconciliation analysis.
3.a Pressure boundary welds in ASME Code Section III components identified in Table 2.7.6.7-1 meet ASME Code Section III requirements for non-destructive examination of welds.	3.a Inspections of the as-built pressure boundary welds identified in ASME Code Section III components identified in Table 2.7.6.7-1, will be performed in accordance with the ASME Code Section III.	3.a The ASME Code Section III code reports exist and conclude that the ASME Code Section III requirements are met for non-destructive examination of the as-built pressure boundary welds in ASME Code Section III components identified in Table 2.7.6.7-1.

Table 2.7.6.7-5 Process and Post-accident Sampling System Inspections, Tests, Analyses, and Acceptance Criteria (Sheet 3 of 6)

Design Commitment		Inspections, Tests, Analyses		Acceptance Criteria	
3.b	Pressure boundary welds in ASME Code Section III piping identified in Table 2.7.6.7-3 meet ASME Code Section III requirements for non-destructive examination of welds.	3.b	Inspections of the as-built pressure boundary welds in ASME Code Section III piping identified in Table 2.7.6.7-3 will be performed in accordance with the ASME Code Section III.	3.b	The ASME Code Section III code reports exist and conclude that the ASME Code Section III requirements are met for non-destructive examination of the as-built pressure boundary welds in ASME Code Section III piping identified in Table 2.7.6.7-3.
4.a	The ASME Code Section III components, identified in Table 2.7.6.7-1, retain their pressure boundary integrity at their design pressure.	4.a	A ~~H~~hydrostatic test~~s~~ will be performed on the as-built components, identified in Table 2.7.6.7-1, required by the ASME Code Section III to be hydrostatically tested.	4.a	ASME Code Data Report(s) exist and conclude that ~~T~~the results of the hydrostatic test~~s~~ of the as-built components identified in Table 2.7.6.7-1 as ASME Code Section III conform ~~with~~ to the requirements of the ASME Code Section III.
4.b	The ASME Code Section III piping, identified in Table 2.7.6.7-3, retains its pressure boundary integrity at its design pressure.	4.b	A ~~H~~hydrostatic test~~s~~ will be performed on the as-built piping, identified in Table 2.7.6.7-3, required by the ASME Code Section III to be hydrostatically tested.	4.b	ASME Code Data Report(s) exist and conclude that ~~T~~the results of the hydrostatic tests of the as-built piping identified in Table 2.7.6.7-3 as ASME Code Section III conform to~~with~~ the requirements of the ASME Code Section III.
5.a	The seismic Category I equipment identified in Table 2.7.6.7-1 ~~is designed to~~can withstand seismic design basis loads without loss of safety function.	5.a.i	Inspections will be performed to verify that the ~~seismic Category I~~ as-built seismic Category I equipment identified in Table 2.7.6.7-1~~,~~ is ~~located in the~~ located in ~~containment or the reactor building~~a seismic Category I structure.	5.a.i	The as-built seismic Category I ~~as-built~~ equipment identified in Table 2.7.6.7-1 is located in ~~the containment or the reactor building~~a seismic Category I structure(s).

	5.a.ii Type tests, ~~and/or~~ analyses, or a combination of type tests and analyses of the seismic Category I equipment identified in Table 2.7.6.7-1 will be performed using analytical assumptions, or will be performed under conditions, which bound the seismic design basis requirements.	5.a.ii A report exists and ~~The results of the type tests and/or analyses~~ concludes that the seismic Category I equipment identified in Table 2.7.6.7-1 can withstand seismic design basis loads without loss of safety function.
	5.a.iii Inspections and analyses will be performed to verify that the as-built seismic Category I equipment identified in Table 2.7.6.7-1, including anchorages, is seismically bounded by the tested or analyzed conditions.~~on the as-built equipment including anchorage.~~	5.a.iii A report exists and concludes that ~~T~~the as-built seismic Category I equipment identified in Table 2.7.6.7-1, including anchorages, is seismically bounded by the tested or analyzed conditions.

Table 2.7.6.7-5 Process and Post-accident Sampling System Inspections, Tests, Analyses, and Acceptance Criteria (Sheet 4 of 6)

Design Commitment	Inspections, Tests, Analyses	Acceptance Criteria
5.b ~~Each of t~~The seismic Category I piping, including supports, identified in Table 2.7.6.7-3 ~~is designed to~~can withstand ~~combined normal and~~ seismic design basis loads without a loss of its safety function.	5.b.i Inspections will be performed to verify that the as-built seismic Category I piping, including supports, identified in Table 2.7.6.7-3 ~~are~~ is supported by a seismic Category I structure(s).	5.b.i ~~Reports(s) document that each of t~~The as-built seismic Category I piping, including supports, identified in Table 2.7.6.7-3 is supported by a seismic Category I structure(s).
	5.b.ii Inspections and analyses will be performed ~~for the existence of a report~~to verify~~ing~~ that the as-built seismic Category I piping, including supports, identified in Table 2.7.6.7-3 can withstand ~~combined normal and~~ seismic design basis loads without a loss of its safety function.	5.b.ii A report exists and concludes that ~~each of~~ the as-built seismic Category I piping, including supports, identified in Table 2.7.6.7-3 can withstand ~~combined normal and~~ seismic design basis loads without a loss of its safety function.
6.a The Class 1E equipment identified in Table~~s~~ 2.7.6.7-1 as being qualified for a harsh environment ~~is designed to~~can withstand the environmental conditions that would exist before, during, and following a design basis ~~event~~ accident without loss of safety function for the time required to perform the safety function.	6.a.i Type tests ~~and/or~~or a combination of type tests and analyses using the design environmental conditions, or under the conditions which bound the design environmental conditions, will be performed on the Class 1E equipment identified in Table 2.7.6.7-1 as being qualified for~~located in~~ a harsh environment.	6.a.i ~~The results of the type tests~~ A report exists and~~/or analyses~~ concludes that the Class 1E equipment identified in Table 2.7.6.7-1 as being qualified for a harsh environment withstands the environmental conditions that would exist before, during, and following a design basis ~~event~~ accident without loss of ~~their~~ safety function, for the time required to perform the safety function.

	6.a.ii ~~An i~~Inspection will be performed ~~on~~ of the as-built Class 1E equipment identified in Table 2.7.6.7-1 as being qualified for a harsh environment and the associated wiring, cables, and terminations located in a harsh environment.	6.a.ii The as-built Class 1E equipment and the associated wiring, cables, and terminations identified in Table 2.7.6.7-1 as being qualified for a harsh environment are bounded by type tests, ~~and/or~~or a combination of type tests and analyses.
6.b ~~The~~ Class 1E equipment, identified in Table 2.7.6.7-1 is powered from ~~their~~ its respective Class 1E division.	6.b A test will be performed on each division of the as-built Class 1E equipment identified in Table 2.7.6.7-1 by providing a simulated test signal only in the Class 1E division under test.	6.b The simulated test signal exists at the as-built Class 1E equipment, identified in Table 2.7.6.7-1~~,~~ under test.

Table 2.7.6.7-5 Process and Post-accident Sampling System Inspections, Tests, Analyses, and Acceptance Criteria (Sheet 5 of 6)

Design Commitment	Inspections, Tests, Analyses	Acceptance Criteria
6.c Separation is provided between redundant divisions of PSS Class 1E ~~divisions~~cables, and between Class 1E ~~divisions~~ cables and non-Class 1E cables.	6.c Inspections of the as-built Class 1E divisional cables will be performed.	6.c Physical separation or electrical isolation is provided in accordance with RG 1.75, between the as-built cables of redundant PSS Class 1E divisions and between Class 1E ~~divisions~~ cables and non-Class 1E cables.
7. Deleted.	7. Deleted.	7. Deleted.
8. The PSS provides ~~the non safety-related function of providing~~ the capability of obtaining reactor coolant and containment atmosphere samples.	8. Tests of the as-built system will be performed to obtain samples of the reactor coolant and containment atmosphere.	8. The as-built PSS ~~provides the non-safety related function of providing the capability of~~ obtains~~ing~~ reactor coolant and containment atmosphere samples.

9.	The motor-operated valves, air-operated valves and check valves, identified in Table 2.7.6.7-1 as having an active safety function perform an active safety function to change position as indicated in the table.	9.i	Type ~~T~~tests or a combination of type tests and analyses of the ~~remotely~~ motor-operated valves and air-operated valves identified in Table 2.7.6.7-1 as having an active safety function will be performed that demonstrate the capability of the valve to operate under its design conditions.	9.i A report exists and concludes that ~~E~~each ~~remotely operated~~ motor-operated valve and air-operated valve identified in Table 2.7.6.7-1 as having an active safety function changes position as identified ~~indicated~~ in Table 2.7.6.7-1 under design conditions.
		9.ii	Tests of the as-built ~~remotely~~ motor-operated valves and air-operated valves identified in Table 2.7.6.7-1 as having an active safety function will be performed under pre-operational flow, differential pressure, and temperature conditions.	9.ii Each as-built ~~remotely operated~~ motor-operated valve and air-operated valve identified in Table 2.7.6.7-1 as having an active safety function changes position as ~~indicated~~ identified in Table 2.7.6.7-1 under ~~the~~ pre-operational test conditions.
		9.iii	Inspections will be performed of the as-built motor-operated and air operated valves identified in Table 2.7.6.7-1 as having an active safety function.	9.iii Each as-built motor-operated and air-operated valve identified in Table 2.7.6.7-1 as having an active safety function is bounded by the type tests, or a combination of type tests and analyses.
		9.~~ii~~iv	Tests of the as-built check valves ~~with active safety functions~~ identified in Table 2.7.6.7-1 as having an active safety function will be performed under preoperational test pressure, temperature, and fluid flow conditions.	9.~~ii~~iv Each as-built check valve identified in Table 2.7.6.7-1 as having an active safety function changes position as indicated in Table 2.7.6.7-1.

Table 2.7.6.7-5 Process and Post-accident Sampling System Inspections, Tests, Analyses, and Acceptance Criteria (Sheet 6 of 6)

Design Commitment	Inspections, Tests, Analyses	Acceptance Criteria
10.a Controls ~~exist~~ are provided in the MCR to open and close the remotely operated valves identified in Table 2.7.6.7-1.	10.a Tests will be performed on the as-built remotely operated valves identified in Table 2.7.6.7-1 using the controls in the as-built MCR.	10.a Controls ~~exist~~ in the as-built MCR ~~to~~ open and close the as-built remotely operated valves identified in Table 2.7.6.7-1.
10.b The valves identified in Table 2.7.6.7-1 as having PSMS control perform an active safety function after receiving a signal from PSMS.	10.b Tests will be performed on the as-built remotely operated valves listed in Table 2.7.6.7-1 as having PSMS control using simulated signals.	10.b The as-built remotely operated valves identified in Table 2.7.6.7-1 as having PSMS control, perform the active function identified in the table after receiving a simulated signal.
11. After loss of motive power, the remotely operated valves identified in Table 2.7.6.7-1 assume the indicated loss of motive power position.	11. Tests of the as-built remotely operated valves identified in Table 2.7.6.7-1 will be performed under the conditions of loss of motive power.	11. ~~After~~ Upon loss of motive power, each as-built remotely operated valve identified in Table 2.7.6.7-1 assumes the indicated loss of motive power position.
12. ~~MCR a~~Alarms and displays ~~of the parameters~~ identified in Table 2.7.6.7-4 ~~can be retrieved~~are provided in the MCR.	12. Inspection~~s~~ will be performed for retrievability of the ~~PSS parameters~~alarms and displays identified in Table 2.7.6.7-4 in the as-built MCR.	12. ~~MCR a~~Alarms and displays identified in Table 2.7.6.7-4 can be retrieved in the as-built MCR.
13. ~~RSC a~~Alarms, displays, and controls ~~are~~ identified in Table 2.7.6.7-4 are provided in the RSC.	13.i Inspection~~s~~ will be performed for retrievability of the ~~as-built RSC~~ alarms and ~~,~~ displays identified in Table 2.7.6.7-4 in the as-built RSC.~~and controls will be performed.~~	13.i Alarms and~~,~~ displays identified in Table 2.7.6.7-4 can be ~~and controls exist on~~ retrieved in the as-built RSC ~~as identified in Table 2.7.6.7-4~~.
	13.ii Tests of the as-built RSC control functions identified in Table 2.7.6.7-4 will be performed.	13.ii Controls in the as-built RSC operate the as-built equipment identified in Table 2.7.6.7-4 with an RSC control function.

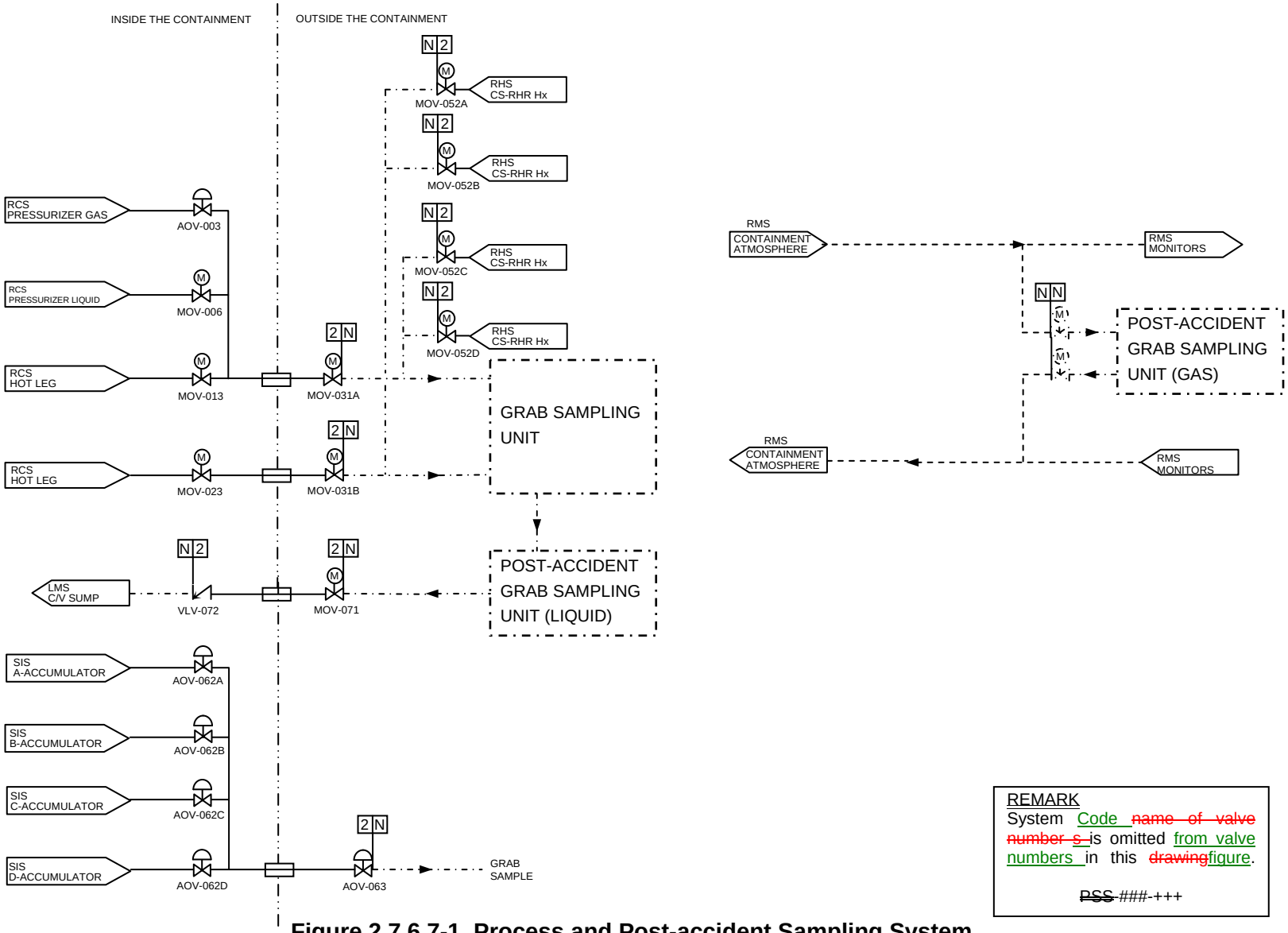

REMARK
System Code ~~name of valve number s~~ is omitted from valve numbers in this ~~drawing~~figure.

~~PSS~~ ###-+++

Figure 2.7.6.7-1 Process and Post-accident Sampling System

Tier 1 Changes Explanation/Basis Document
Tier 1, Section 2.7.6.7 - Process and Post-accident Sampling System

Item No.	Explanation/Basis for Change
Design Description 2.7.6.7.1	
Editorial corrections and changes made to provide consistency among Tier 1 sections. Subheadings are deleted from the Design Description.	
A	Text revised to align with the Tier 2 description and for consistency within other areas of Tier 1 Section 2.7.6.7.1, including the Key Design Features. See Item E.
B	Note 1.
C	Notes 1 and 2. See Item D.
D	Note 1. See Item C.
E	Text deleted as this information is not consistent with SRP 14.3 guidance and some pertinent information has been relocated to the first paragraph. See Item A.
F	Notes 1 and 2. See Items G and H
G	Notes 1 and 2. See Item F
H	Notes 1 and 2. See Item F
I	Notes 1 and 2. See Item U
J	Notes 1 and 2. See Item T
K	Notes 1 and 2. See Items E and P
L	Notes 1 and 2. See Item Q
M	Notes 1 and 2. See Item Q
N	Notes 1 and 2. See Items R and Q
O	Notes 1 and 2. See Item Q
P	Notes 1 and 2. See Item K
Q	Notes 1 and 2. See Items L, M, N and O. This change alters the response to RAI 183-1935, Revision 0, 14.03.07-8.
R	Notes 1 and 2. See Item N
S	Negative statement deleted from Tier 1 Design Description.
T	Notes 1 and 2. See Item J
U	Notes 1 and 2. See Item I
V	Negative statement deleted from Tier 1 Design Description.
W	Negative statement deleted from Tier 1 Design Description.
X	Note 1.
Y	Note 1.
Z	Changed the statement to use a similar wording. This change alters the response to RAI 184-1912, Question 14.03.07-27.
Table 2.7.6.7-1	
	No Change.
Table 2.7.6.7-2	
	No Change.
Table 2.7.6.7-3	
	Inserted “PSS-VLV-“ prior to 072 to match all other valve tags listed in table.
Table 2.7.6.7-4	
	No Change.

Item No.	Explanation/Basis for Change
ITAAC Table 2.7.6.7-5	
1	DC, ITA, and AC: Generic changes to ITAAC for functional arrangement to provide clarity and consistency. [RIS R1, p7, Standardization and Consistency, 2nd bullet]
2.a.i	ITA and AC: Generic changes to ITAAC for ASME Code Section III component inspection to provide clarity and consistency. [RIS R1, p7, Standardization and Consistency, 2nd bullet] These changes alter the response to RAI 242-2153 14.03.03-5 and RAI 404-3063 14.03.03-20.
2.a.ii	ITA: Generic changes made to ITAAC for ASME Code Section III component design reconciliation to provide clarity and consistency. [RIS R1, p7, Standardization and Consistency, 2nd bullet] AC: Generic change made to provide consistency with the DC. [RIS R1, p5, Logic, 6th bullet] These changes alter the response to RAI 242-2153 14.03.03-5 and RAI 404-3063 14.03.03-20.
2.b.i	DC: ITA: Generic changes made to ITAAC for ASME Code Section III piping and supports to provide clarity and consistency. [RIS R1, p7, Standardization and Consistency, 2nd bullet] These changes alter the response to RAI 242-2153 14.03.03-6 and RAI 404-3063 14.03.03-21.
2.b.ii	ITA: Generic changes made to ITAAC for ASME Code Section III piping and support design reconciliation to provide clarity and consistency. [RIS R1, p7, Standardization and Consistency, 2nd bullet] AC: Generic change made to provide consistency with the DC. [RIS R1, p5, Logic, 6th bullet] These changes alter the response to RAI 242-2153 14.03.03-6 and RAI 404-3063 14.03.03-21.
3.a	ITA, AC: Generic changes made to ITAAC for ASME Code Section III component NDE to provide clarity and consistency. [RIS R1, p7, Standardization and Consistency, 2nd bullet] These changes do not alter the response to RAI 242-2153 14.03.03-8.

Item No.	Explanation/Basis for Change
3.b	ITA, AC: Generic changes made to ITAAC for ASME Code Section III piping NDE to provide clarity and consistency. [RIS R1, p7, Standardization and Consistency, 2nd bullet] These changes do not alter the response to RAI 242-2153 14.03.03-8.
4.a	ITA: Generic changes made to ITAAC for ASME Code Section III component hydrostatic testing to provide clarity and consistency. [RIS R1, p7, Standardization and Consistency, 2nd bullet] AC: Generic change made to provide consistency with the DC. [RIS R1, p5, Logic, 6th bullet]
4.b	ITA: Generic changes made to ITAAC for ASME Code Section III piping hydrostatic testing to provide clarity and consistency. [RIS R1, p7, Standardization and Consistency, 2nd bullet] AC: Generic change made to provide consistency with the DC. [RIS R1, p5, Logic, 6th bullet]
5.a	DC: Generic changes made to ITAAC for seismic Category I equipment to provide clarity and consistency. [RIS R1, p7, Standardization and Consistency, 2nd bullet] This change alters the response to RAI 183-1935, Revision 0, 14.03.07-7.
5.a.i	ITA, AC: Generic changes made to ITAAC for seismic Category I equipment location to provide clarity and consistency. [RIS R1, p7, Standardization and Consistency, 2nd bullet] This change alters the response to RAI 183-1935, Revision 0, 14.03.07-7.
5.a.ii	ITA, AC: Generic changes made to ITAAC for seismic Category I equipment loads to provide clarity and consistency. [RIS R1, p7, Standardization and Consistency, 2nd bullet] This change alters the response to RAI 183-1935, Revision 0, 14.03.07-7.
5.a.iii	ITA, AC: Generic changes made to ITAAC for seismic Category I equipment bounding to provide clarity and consistency. [RIS R1, p7, Standardization and Consistency, 2nd bullet]

Item No.	Explanation/Basis for Change
5.b	DC: Generic changes made to ITAAC for seismic Category 1 piping to provide clarity and consistency. [RIS R1, p7, Standardization and Consistency, 2nd bullet]
5.b.i	ITA, AC: Generic changes made to ITAAC for seismic Category I piping to provide clarity and consistency. [RIS R1, p3, Language, 4th bullet] This change does not alter the response to RAI 452-3297, Revision 1, 14.03.02-12.
5.b.ii	ITA, AC: Generic changes made to ITAAC for seismic Category I piping to provide clarity and consistency. [RIS R1, p3, Language, 4th bullet] This change alters the response to RAI 452-3297, Revision 1, 14.03.02-12. This change alters the changes made in UAP-HF-10043.
6.a	DC: Generic changes made to ITAAC for 1E equipment qualified for a harsh environment to provide clarity and consistency. [RIS R1, p7, Standardization and Consistency, 2nd bullet] , [RIS R1, p3, Language, 4th bullet]
6.a.i	ITA: Generic changes made to ITAAC for 1E equipment qualified for a harsh environment to provide clarity and consistency. [RIS R1, p7, Standardization and Consistency, 2nd bullet], [RIS R1, p3, Language, 4th bullet] This change alters the response to RAI 191-2048, Revision 0, 14.03.04-03 and RAI 511-3739, Revision 0, 03.11-21.
6.a.ii	ITA, AC: Generic changes made to ITAAC for 1E equipment qualified for a harsh environment to provide clarity and consistency. [RIS R1, p7, Standardization and Consistency, 2nd bullet]
6.b	DC: Generic changes made to ITAAC for 1E power divisions to provide clarity and consistency. [RIS R1, p7, Standardization and Consistency, 2nd bullet] This change alters the response to RAI 184-1912, Revision 0, 14.03.07-16
6.c	DC, AC: Generic changes made to ITAAC for 1E separation to provide clarity and consistency. [RIS R1, p7, Standardization and Consistency, 2nd bullet], [RIS R1, p3, Language, 4th bullet] This change alters the response to RAI 191-2048, Revision 0, 14.03.04-09
7.	DC, ITA, AC: No change. This ITAAC remains deleted.

Item No.	Explanation/Basis for Change
8.	DC, AC: Generic changes made to ITAAC for PSS functional capabilities to provide clarity and consistency. [RIS R1, p7, Standardization and Consistency, 2nd bullet] This change alters the response to RAI 184-1912, Revision 0, 14.03.07-21.
9.	DC: Generic changes made to ITAAC for MOVs, AOVs and check valves with safety functions to provide clarity and consistency. [RIS R1, p7, Standardization and Consistency, 2nd bullet]
9.i	ITA, AC: Generic changes made to ITAAC for MOVs and AOVs with active safety functions to provide clarity and consistency. [RIS R1, p7, Standardization and Consistency, 2nd bullet]
9.ii	ITA, AC: Generic changes made to ITAAC for MOVs and AOVs with active safety functions to provide clarity and consistency. [RIS R1, p7, Standardization and Consistency, 2nd bullet]
9.iii	ITA, AC: Generic changes made to ITAAC for MOVs and AOVs with active safety functions to provide clarity and consistency. [RIS R1, p7, Standardization and Consistency, 2nd bullet]
9.iv	ITA, AC: Generic changes made to ITAAC for check valves with active safety functions to provide clarity and consistency. [RIS R1, p7, Standardization and Consistency, 2nd bullet]
10.a	DC, ITA, AC: Generic changes made to ITAAC for MOV controls in the MCR to provide clarity and consistency. [RIS R1, p7, Standardization and Consistency, 2nd bullet] This change does not alter the response to RAI 193-1842, Revision 0, 14.03.04-29.
10.b	DC, ITA, AC: No change
11	AC: Generic changes made to ITAAC for MOV motive power to provide clarity and consistency. [RIS R1, p7, Standardization and Consistency, 2nd bullet]
12	DC, ITA, AC: Generic changes made to ITAAC for MCR alarms and displays to provide clarity and consistency. [RIS R1, p7, Standardization and Consistency, 2nd bullet] This change alters the response to RAI 222-1933, Revision 1, 14.03.11-24.

Item No.	Explanation/Basis for Change
13	DC: Generic changes made to ITAAC for RSC alarms, displays and controls to provide clarity and consistency. [RIS R1, p7, Standardization and Consistency, 2nd bullet] This change alters the response to RAI 222-1933, Revision 1, 14.03.11-24.
13.i	ITA, AC: Generic changes made to ITAAC for RSC alarms, displays and controls retrievability to provide clarity and consistency. [RIS R1, p7, Standardization and Consistency, 2nd bullet] This change alters the response to RAI 222-1933, Revision 1, 14.03.11-24, and does not alter the changes made in UAP-HF-10043.
13.ii	ITA, AC: Generic changes made to ITAAC for RSC alarms, displays and controls operability to provide clarity and consistency. [RIS R1, p7, Standardization and Consistency, 2nd bullet] This change alters the changes made in UAP-HF-10043.
Figure 2.7.6.7-1 Process and Post-accident Sampling System	
REMARK	Revised to correct grammar and changed system “name” to “Code” and “drawing” to “figure” for consistency.
The non-safety related portion is in dash dot line to be consistent with Figure symbol defined in Tier 1 Section 1.3.	

Note 1: Revised to provide consistency between the Design Description (DD) and the Design Commitment (DC) in the ITAAC table. Revised text to include only the necessary attributes for ITAAC.

Note 2: Text relocated within the DD section to align with the sequence and numbering of the corresponding DC in the ITAAC Table.

2.4.6 Chemical and Volume Control System (CVCS)

2.4.6.1 Design Description

~~System Purpose and Functions~~

The purpose of the CVCS ~~are~~ is to maintain the coolant inventory of the RCS and to provide chemical and radioactive cleanup of the RCS. Some components of the CVCS, such as the containment isolation valves, are safety-related, while other CVCS components, such as those associated with the boron recycle system (BRS), are non-safety related. A

CVCS safety functions include:

- ~~Providing a portion of~~Maintaining the reactor coolant pressure boundary
- Providing the containment isolation function, as described in Section 2.11.2, of CVCS lines penetrating the containment
- Providing isolation of a source of water connected to the RCS to prevent inadvertent dilution of boron in the coolant
- Providing isolation of ~~a~~the charging line ~~upon an ECCS actuation signal and high pressurizer water level signal~~ B

~~CVCS non-safety functions include:~~ C

- ~~Maintaining appropriate volume and quality of reactor coolant for the RCS~~ D
- ~~Regulating the boron concentration for the chemical shim control~~ C
- ~~Removing fission products and ionic corrosion products in the reactor coolant~~ C
- ~~Supplying seal water to the reactor coolant pump seals~~ E
- ~~Receiving borated water discharged from the RCS~~ C
- ~~Providing pressurizer auxiliary spray water for depressurization of the RCS when none of the RCPs are operating~~ C

~~Location and Functional Arrangement~~

1. ~~The CVCS is located in the containment, in the reactor building, and in auxiliary building. Table 2.4.6-1 identifies the locations of specific CVCS equipment and piping.~~ The functional arrangement of the CVCS ~~equipment and piping is shown on Figure 2.4.6-1.~~is as described in the Design Description of Subsection 2.4.6.1 and in Table 2.4.6-1 and as shown in Figure 2.4.6-1.~~Table 2.4.6-2 and 2.4.6-3 provide~~ F

~~information on design characteristics of system components and system piping, respectively. Information in these tables is discussed below.~~

~~**Key Design Features**~~

~~The key design features of the CVCS are reflected in the system design bases, as follows:~~ G

- ~~Letdown flow comes from the RCS and flows through the regenerative heat exchanger, where its temperature is reduced by transferring heat to the incoming charging flow. The coolant is then depressurized and is further cooled in the letdown heat exchanger.~~ G

- ~~The letdown water then flows through the purification loop, and purified coolant is routed to the volume control tank (VCT), where hydrogen is supplied to strip fission gases from the reactor coolant. The pressure of hydrogen in the VCT is controlled to establish the concentration of hydrogen dissolved in the reactor coolant.~~ G

- ~~The centrifugal charging pumps are provided to take suction from the VCT and return the cooled, purified reactor coolant to the RCS. The charging flow is pumped to the RCS through the regenerative heat exchanger, and injected into a cold leg of the reactor coolant system. A portion of the charging pump flow is directed to the reactor coolant pumps through a seal water injection filter.~~ H

- ~~An auxiliary pressurizer spray provides a means of cooling and depressurizing the pressurizer when the reactor coolant pumps are not operated.~~ I

- ~~An excess letdown path is provided in the event that the normal letdown path is inoperable. The excess letdown flow path is also used to provide additional letdown capability during the final stages of plant heatup.~~ G

- ~~The CVCS is designed to provide containment isolation of CVCS lines penetrating the containment.~~ G

~~**Seismic and ASME Code Classifications**~~

~~The seismic classifications for system component and piping are identified in Table 2.4.6-2 and 2.4.6-3. The ASME Code Section III requirements for system component and piping are also identified in Table 2.4.6-2 and 2.4.6-3. Pressure boundary welds in ASME Code Section III component and piping meet ASME Code Section III requirements.~~ J K L

2.a.i The ASME Code Section III components of the CVCS, ~~requirements for system component and piping are also~~ identified in Table 2.4.6-2 ~~and 2.4.6-3.~~, are fabricated, installed and inspected in accordance with ASME Code Section III requirements. M

2.a.ii The ASME Code Section III components of the CVCS identified in Table 2.4.6-2 are reconciled with the design requirements. N

2.b.i The ASME Code Section III piping of the CVCS, including supports, ~~requirements for system component and piping are also~~ identified in Table ~~2.4.6-2 and~~ 2.4.6-3 is fabricated, installed, and inspected in accordance with ASME Code Section III requirements. O

2.b.ii The ASME Code Section III piping of the CVCS, including supports, identified in Table 2.4.6-3 is reconciled with the design requirements. P

3.a Pressure boundary welds in ASME Code Section III components, identified in Table 2.4.6-2, ~~and piping~~ meet ASME Code Section III requirements for non-destructive examination of welds. Q

3.b Pressure boundary welds in ASME Code Section III ~~component and~~ piping, identified in Table 2.4.6-3, meet ASME Code Section III requirements for non-destructive examination of welds. R

4.a The ASME Code Section III components, identified in Table 2.4.6-2, retain their pressure boundary integrity at their design pressure. S

4.b The ASME Code Section III piping, identified in Table 2.4.6-3, retains its pressure boundary integrity at its design pressure. T

5.a The seismic ~~classifications for system component and piping are~~ Category I equipment identified in Table 2.4.6-2 ~~and 2.4.6-3~~ can withstand seismic design basis loads without loss of safety function. U

5.b The seismic Category I piping, including supports, identified in Table 2.4.6-3 can withstand seismic design basis loads without a loss of its safety function. V

~~The materials used in the RCPB conform to the applicable ASME code rules. The welding materials used for joining RCPB materials conform to the requirements of the ASME Code Section III.~~ W

~~**System Operation**~~

~~System operation under different conditions – power operation, cooldown, shutdown, etc. – is addressed under key design features. The CVCS performs these functions during normal modes of operation, including power generation and shutdown.~~ X

~~**Alarms, Displays, and Controls**~~

~~Table 2.4.6-4 identifies the important alarms, displays, and controls associated with the CVCS that are located in the main control room.~~ Y

~~**Logic**~~

~~The containment isolation valves in the CVCS letdown line and charging line close on a containment isolation signal. The seal water return line close on a containment isolation signal with the undervoltage signal present; where as the containment isolation valves in the seal water injection line are closed manually.~~ Z

~~**Interlocks**~~

~~The CVCS is provided with a boron dilution interlock that blocks primary makeup water flow, preventing over dilution of the RCS. The CVCS is also provided with charging line isolation upon an ECCS actuation signal and high pressurizer water level signal.~~ AA

~~**Class 1E Electrical Power Sources and Divisions**~~

~~The CVCS equipment identified in Table 2.4.6-2 as Class 1E is powered from their respective Class 1E divisions, and separation is provided between Class 1E divisions, and between Class 1E divisions and non-Class 1E cable.~~ BB

~~**Equipment to be Qualified for Harsh Environments**~~

6.a The Class 1E equipment identified in Table 2.4.6-2 as being qualified for a harsh environment can withstand the environmental conditions that would exist before, during, and following a design basis accident ~~event~~ without loss of safety function for the time required to perform the safety function. CC

6.b Class 1E equipment ~~The CVCS equipment~~ identified in Table 2.4.6-2 ~~as Class 1E~~ is powered from its~~their~~ respective Class 1E division. ~~s, and separation is provided between Class 1E divisions, and between Class 1E divisions and non-Class 1E cable.~~ DD

6.c ~~The CVCS equipment identified in Table 2.4.6-2 as Class 1E is powered from their respective Class 1E divisions, and s~~Separation is provided between redundant~~Class 1E~~ divisions of CVCS Class 1E cables, and between Class 1E cables ~~divisions~~ and non-Class 1E cables. EE

7. Deleted. FF

8.a The CVCS provides makeup capability to maintain the RCS volume. GG

8.b Deleted. HH

8.c The CVCS supplies seal water to the RCP seals. I I

9. Controls are provided in the MCR to open and close the remotely operated valves identified in Table 2.4.6-24. ~~identifies the important alarms, displays, and controls associated with the CVCS that are located in the main control room.~~ JJ

10.a The motor-operated valves, air-operated valves and check valves identified in Table 2.4.6-2 as having an active safety function perform an active safety function to change position as indicated in the table. KK

10.b After loss of motive power, the remotely operated valves, identified in Table 2.4.6-2, assume the indicated loss of motive power position. LL

11. Controls are provided in the MCR to start and stop the CVCS pumps identified in Table 2.4.6-4. MM

12. Alarms and displays identified in Table 2.4.6-4 ~~identifies the important alarms, displays, and controls associated with the CVCS that~~ are provided ~~located~~ in the MCR~~main control room~~. NN

13. Alarms, displays and controls identified in Table 2.4.6-4 are provided in the RSC. OO

14.a Deleted. PP

14.b Deleted. QQ

~~**Interface Requirements**~~

~~There are no safety-related interfaces with systems outside of the certified design.~~ RR

~~**Numeric Performance Values**~~

~~When necessary to demonstrate satisfaction of a design commitment, numeric performance values for selected components have been specified as ITAAC acceptance criteria in Table 2.4.6-5.~~ SS

2.4.6.2 Inspections, Tests, Analyses, and Acceptance Criteria

Table 2.4.6-5 describes the ITAAC for the CVCS.

The ITAAC associated with the CVCS equipment, components, and piping ~~and~~ that comprise a portion of the CIS are described in Table 2.11.2-2.

The ITAAC associated with CVCS piping systems and components that are designated high energy or ASME Class 1 are described in Table 2.3-2. TT

Table 2.4.6-1 Chemical and Volume Control System Location of Equipment and Piping (Sheet 1 of 2)

System and Components	Location
Regenerative heat exchanger	Containment
Letdown heat exchanger	Containment
Excess letdown heat exchanger	Containment
Seal Water Heat Exchanger	Reactor Building
Volume control tank	Reactor Building
Charging pumps	Reactor Building
Letdown line and valves from RCS to and including valve CVS-LCV-362 prior to Regenerative Heat Exchanger.	Containment
Letdown line piping and valves from and excluding the valve CVS-LCV-362 prior to Regenerative Heat Exchanger to the following valves: RHRS valves (2 each) (excluding the valves) RHS-AOV-024 B, C; Containment isolation valve (excluding the valve) CVS-AOV-005	Containment
All CVCS containment isolation valves and piping between the valves.	Containment and Reactor Building
Excess letdown piping and valves from RCS to and excluding containment isolation valves CVS-MOV-203 and CVS-VLV-202. This includes piping related to seal water return line from and excluding 4 valves CVS-AOV-192 A, B, C, D and to seal water return line relief valve CVS-SRV-201 (including the valve).	Containment
RCP seal water return piping and valves from RCP seal to and including 4 valves CVS-AOV-192 A, B, C, D	Containment
RCP seal water injection piping and valves excluding following valves and piping: containment isolation valves, piping between these valves; piping downstream of CVS-VLV-180 A, B, C, D (including valves); seal injection filter line from CVS-VLV-168 to CVS-VLV-173 (excluding valves)	Reactor Building and Containment
RCP seal water injection piping and valves downstream of including valves CVS-VLV-180 A, B, C, D	Containment
Charging lines from and including valves CVS-VLV-158 and CVS-AOV-159 to their penetration into the RCS	Containment
Auxiliary Spray line from and including valves CVS-AOV-155 to the penetration into the RCS	Containment
Charging line and Auxiliary Spray line piping and valves between the following valves (excluding the valves) downstream of the Regenerative Heat Exchanger: CVS-VLV-158, CVS-AOV-159, CVS-AOV-155 and the containment isolation valve CVS-VLV-153	Containment

Table 2.4.6-1 Chemical and Volume Control System Location of Equipment and Piping (Sheet 2 of 2)

System and Components	Location
Charging line piping and valves from and including the volume control outlet valve CVS-LCV-031B to charging pump minimum flow orifices and following valves: CVS-VLV-213 (including valve); CVS-VLV-585 (including valve); CVS-VLV-557 (including valve) ; CVS-VLV-163 and 164 (excluding valves); CVS-VLV-591 and 593 (including valve); and CVS-MOV-152 (excluding valve)	Reactor Building
CVCS piping and valves related to the primary makeup water supply isolation from and including the isolation valve CVS-FCV-128 to primary makeup flow control valve CVS-FCV-133A (including valve).	Reactor Building
CVCS Charging Line Isolation (CVS-MOV-151)	Reactor Building
CVCS Charging Line Containment Isolation (CVS-MOV-152)	Reactor Building
RCP Seal Water Return Line Containment Isolation (CVS-MOV-203, 204)	Containment/ Reactor Building
RCP Seal Water Injection Line Containment Isolation (CVS-MOV-178 A, B, C, D)	Reactor Building
RCP Seal Water Injection Line Containment Isolation Check (CVS-VLV-179 A, B, C, D)	Containment
Letdown Orifice Stop (CVS-AOV-001 A, B, C)	Containment
Auxiliary Pressurizer Spray Line Isolation (CVS-AOV-155)	Containment
CVCS Charging Line Isolation (CVS-AOV-159)	Containment
CVCS Letdown Line Isolation (CVS-LCV-361, 362)	Containment
Air Operated Valve (CVS-AOV-192 A, B, C, D)	Containment
Excess Letdown Isolation CVS-AOV-221, 222	Containment
Auxiliary Pressurizer Spray Line Check (CVS-VLV-156)	Containment
Letdown Containment Isolation (CVS-AOV-005, 006)	Containment/ Reactor Building
Volume Control Tank Outlet Valve (CVS-LCV-031B, C)	Reactor Building
Charging Pump Alternate Makeup Line Stop (CVS-LCV-031 D, E, F, G)	Reactor Building
Primary Makeup Water Supply Isolation (CVS-FCV-128, 129)	Reactor Building

Table 2.4.6-2 Chemical and Volume Control System Equipment Characteristics (Sheet 1 of 6)

Equipment Name	Tag No.	ASME Code Section III Class	Seismic Category I	Remotely Operated Valve	Class 1E/ Qual. For Harsh Envir.	PSMS Control	Active Safety Function	Loss of Motive Power Position
Charging pumps	CVS-MPP-001 A, B	3	Yes	—	Yes / No	Undervoltage Signal	Start	—
Regenerative heat exchanger	CVS-MHX-001	3	Yes	—	— / —	—	—	—
Letdown heat exchanger – Tube Side	CVS-MHX-002	3	Yes	—	— / —	—	—	—
Letdown heat exchanger – CCW Side		2	Yes	—	— / —	—	—	—
Excess letdown heat exchanger – Tube Side	CVS-MHX-003	3	Yes	—	— / —	—	—	—
Excess letdown heat exchanger – CCW side		2	Yes	—	— / —	—	—	—
Letdown Orifice Stop Valve	CVS-AOV-001 A, B, C	3	Yes	Yes	Yes/Yes	Containment Isolation Phase A	Transfer Closed	Closed
Letdown Containment Isolation Valve (First)	CVS-AOV-005	2	Yes	Yes	Yes/Yes	Containment Isolation Phase A	Transfer Closed	Closed
Letdown Containment Isolation Valve (Second)	CVS-AOV-006	2	Yes	Yes	Yes/No	Containment Isolation Phase A	Transfer Closed	Closed

Table 2.4.6-2 Chemical and Volume Control System Equipment Characteristics (Sheet 2 of 6)

Equipment Name	Tag No.	ASME Code Section III Class	Seismic Category I	Remotely Operated Valve	Class 1E/ Qual. For Harsh Envir.	PSMS Control	Active Safety Function	Loss of Motive Power Position
Volume Control Tank Outlet Valve	CVS-LCV-031 B, C	3	Yes	Yes	Yes/No	—	Transfer Closed	As Is
Charging Pump Alternate Makeup Valve	CVS-LCV-031 D, E,F,G	3	Yes	Yes	Yes/No	—	Transfer Closed/ Open	As Is
Volume control tank outlet check Valve	CVS-VLV-125	3	Yes	No	— / —	—	Transfer Closed	—
Charging pump minimum flow check Valve	CVS-VLV-129A, B	3	Yes	No	— / —	—	Transfer Closed/ Open	—
Charging pump discharge check Valve	CVS-VLV-131A, B	3	Yes	No	— / —	—	Transfer Closed/ Open	—
CVCS Charging Line Isolation Valve	CVS-MOV-151	3	Yes	Yes	Yes/No	ECCS Actuation and CVCS isolation	Transfer Closed	As Is
CVCS Charging Line Containment Isolation Valve	CVS-MOV-152	2	Yes	Yes	Yes/No	ECCS Actuation and CVCS isolation	Transfer Closed	As Is

Table 2.4.6-2 Chemical and Volume Control System Equipment Characteristics (Sheet 3 of 6)

Equipment Name	Tag No.	ASME Code Section III Class	Seismic Category I	Remotely Operated Valve	Class 1E/ Qual. For Harsh Envir.	PSMS Control	Active Safety Function	Loss of Motive Power Position
CVCS Charging Line Isolation Check Valve	CVS-VLV-153	2	Yes	No	— / —	—	Transfer Closed	—
Auxiliary Pressurizer Spray Line Isolation Valve	CVS-AOV-155	1	Yes	Yes	Yes/Yes	—	Transfer Closed	Closed
Auxiliary Pressurizer Spray Line Check Valve	CVS-VLV-156	1	Yes	No	— / —	—	Transfer Closed	—
Charging Line Check Valve	CVS-VLV-158	1	Yes	No	— / —	—	—	—
CVCS Charging Line Isolation Valve	CVS-AOV-159	1	Yes	Yes	Yes/Yes	—	Transfer Closed/ Open	Open
CVCS Charging Line Check Valve	CVS-VLV-160, 161	1	Yes	No	— / —	—	Transfer Closed	—
RCP Seal Injection Line Containment Isolation	CVS-MOV-178 A, B, C, D	2	Yes	Yes	Yes/No	—	Transfer Closed	As Is
RCP Seal Injection Line Containment Isolation Check Valve	CVS-VLV-179 A, B, C, D	2	Yes	No	— / —	—	Transfer Closed/ Open	—
RCP Seal Water Injection Valve	CVS-VLV-180 A, B, C, D	1	Yes	No	— / —	—	—	—

Table 2.4.6-2 Chemical and Volume Control System Equipment Characteristics (Sheet 4 of 6)

Equipment Name	Tag No.	ASME Code Section III Class	Seismic Category I	Remotely Operated Valve	Class 1E/ Qual. For Harsh Envir.	PSMS Control	Active Safety Function	Loss of Motive Power Position
RCP Seal Injection Line Check Valve (First)	CVS-VLV-181 A, B, C, D	1	Yes	No	— / —	—	Transfer Closed/ Open	—
RCP Seal Injection Line Check Valve (Second)	CVS-VLV-182 A, B, C, D	1	Yes	No	— / —	—	Transfer Closed/ Open	—
Air Operated Valve	CVS-AOV-192 A, B, C, D	2	Yes	Yes	Yes/Yes	Undervoltage Signal	Transfer Closed	Closed
RCP Seal Return Line Containment Isolation Valve	CVS-MOV-203	2	Yes	Yes	Yes/Yes	Containment Isolation Phase A with Undervoltage Signal Containment Isolation Phase B ~~with~~ ~~Undervoltage Signal~~	Transfer Closed	As Is
Air Operated Valve	CVS-AOV-196 A, B, C, D	3	Yes	Yes	Yes/Yes	Undervoltage signal	Transfer Closed	Closed
RCP Seal Return Line Containment Isolation Check valve	CVS-VLV-202	2	Yes	No	— / —	—	Transfer Closed	—

Table 2.4.6-2 Chemical and Volume Control System Equipment Characteristics (Sheet 5 of 6)

Equipment Name	Tag No.	ASME Code Section III Class	Seismic Category I	Remotely Operated Valve	Class 1E/ Qual. For Harsh Envir.	PSMS Control	Active Safety Function	Loss of Motive Power Position
RCP Seal Return Line Containment Isolation Valve	CVS-MOV-204	2	Yes	Yes	Yes/No	Containment Isolation Phase A with Undervoltage Signal Containment Isolation Phase B ~~with Undervoltage Signal~~	Transfer Closed	As Is
Primary Makeup Water Supply Isolation	CVS-FCV-128, 129	3	Yes	Yes	Yes/No	Reactor Makeup Water Line Isolation	Transfer Closed	As Is
Excess Letdown Isolation Valve	CVS-AOV-221, 222	1	Yes	Yes	Yes/Yes	—	Transfer Closed	Closed
CVCS Letdown Line Isolation Valve	CVS-LCV-361	1	Yes	Yes	Yes/Yes	—	Transfer Closed	Closed
CVCS Letdown Line Isolation Valve	CVS-LCV-362	1	Yes	Yes	Yes/Yes	—	Transfer Closed	Closed
Charging pump alternate makeup line check	CVS-VLV-592	3	Yes	No	— / —	—	Transfer Open	—

Table 2.4.6-2 Chemical and Volume Control System Equipment Characteristics (Sheet 6 of6)

Equipment Name	Tag No.	ASME Code Section III Class	Seismic Category I	Remotely Operated Valve	Class 1E/ Qual. For Harsh Envir.	PSMS Control	Active Safety Function	Loss of Motive Power Position
Charging pump alternate makeup line check	CVS-VLV-594	3	Yes	No	— / —	—	Transfer Open	—
Charging pump alternate makeup line check	CVS-VLV-595	3	Yes	No	— / —	—	Transfer Closed/ Open	—
Primary Makeup Water Supply Flow	CVS-FT-128, 129	—	Yes	—	Yes/No	—	—	—

NOTE:
Dash (—) indicates not applicable

Table 2.4.6-3 Chemical and Volume Control System Piping Characteristics (Sheet 1 of 2)

Pipe Line Name	ASME Code Section III Class	Seismic Category I
Letdown line and valves from RCS to and including valve CVS-LCV-362 prior to Regenerative Heat Exchanger.	1	Yes
Letdown line piping and valves from and excluding the valve CVS-LCV-362 prior to Regenerative Heat Exchanger to the following valves: RHRS valves (2 each) (excluding the valves) RHS-AOV-024 B, C; Containment isolation valve (excluding the valve) CVS-AOV-005.	3	Yes
All CVCS containment isolation valves and piping between the valves.	2	Yes
Excess letdown piping and valves from RCS to and including valve CVS-AOV-222 just prior to excess letdown heat exchanger.	1	Yes
Excess letdown piping and valves from but excluding valve CVS-AOV-222 just prior to excess letdown heat exchanger to and excluding containment isolation valves CVS-MOV-203 and CVS-VLV-202. This includes piping related to seal water return from RCP seals to but excluding 4 valves CVS-AOV-192 A, B, C, D.	3	Yes
RCP seal water return piping and valves from RCP seal to and including valves CVS-AOV-192 A, B, C, D	2	Yes
RCP seal water injection piping and valves excluding following valves and piping: containment isolation valves, piping between these valves; piping downstream of CVS-VLV-180 A, B, C, D (including valves); seal injection filter line from CVS-VLV-168 to CVS-VLV-173 (excluding valves)	3	Yes
RCP seal water injection piping and valves downstream of including valves CVS-VLV-180 A, B, C, D	1	Yes
Charging lines from and including valves CVS-VLV-158 and CVS-AOV-159 to their penetration into the RCS	1	Yes
Charging line piping and valves between the following valves (excluding the valves) downstream of the Regenerative Heat Exchanger: CVS-VLV-158 and CVS-AOV-159. And, containment isolation valve CVS-VLV-153 (excluding the valve)	3	Yes
Auxiliary Spray line from and including valves CVS-AOV-155 to the penetration into the RCS	1	Yes
Auxiliary Spray piping up to but excluding CVS-AOV-155	3	Yes

Table 2.4.6-3 Chemical and Volume Control System Piping Characteristics (Sheet 2 of 2)

Pipe Line Name	ASME Code Section III Class	Seismic Category I
Charging line piping and valves from and including the volume control outlet valve CVS-LCV-031B to charging pump minimum flow orifices and the following valves: CVS-VLV-213 (including valve); CVS-VLV-585 (including valve); CVS-VLV-557 (including valve); CVS-VLV-163 and 164 (excluding valves); CVS- VLV-591 and 593 (including valves); and CVS-MOV-152 (excluding valve)	3	Yes
CVCS piping and valves related to the primary makeup water supply isolation from and including the isolation valve CVS-FCV-128 to primary makeup flow control valve CVS-FCV-133A (including valve).	3	Yes

Table 2.4.6-4 Chemical and Volume Control System Equipment, Alarms, Displays, and Control Functions (Sheet 1 of 2)

Equipment Name	MCR/RSC Alarm	MCR Display	MCR/RSC Control Function	RSC Display
Charging Pump (Run Status)	No	Yes	Yes	Yes
Primary Makeup Water Supply Flow	Yes	Yes	No	Yes
Letdown Containment Isolation Valves (CVS-AOV-005,006)	No	Yes	Yes	Yes
CVCS Charging Line Containment Isolation Valve (CVS-MOV-152)	No	Yes	Yes	Yes
RCP Seal Injection Line Containment Isolation (CVS-MOV-178 A, B, C, D)	No	Yes	Yes	Yes
RCP Seal Return Line Containment Isolation Valves (CVS-MOV-203,204)	No	Yes	Yes	Yes
Volume Control Tank Outlet Valves (CVS-LCV-031 B, C)	No	Yes	Yes	Yes
Charging Pump Alternate Makeup Valves (CVS-LCV-031 D,E,F,G)	No	Yes	Yes	Yes
CVCS Charging Line Isolation Valve (CVS-MOV-151)	No	Yes	Yes	Yes
Auxiliary Pressurizer Spray Line Isolation Valve (CVS-AOV-155)	No	Yes	Yes	Yes
CVCS Charging Line Isolation Valve (CVS-AOV-159)	No	Yes	Yes	Yes
Air Operated Valves (CVS-AOV-192 A, B, C, D)	No	Yes	Yes	Yes
Air Operated Valves (CVS-AOV-196 A, B, C, D)	No	Yes	Yes	Yes
Primary Makeup Water Supply Isolation (CVS-FCV-128, 129)	No	Yes	Yes	Yes

Table 2.4.6-4 Chemical and Volume Control System Equipment, Alarms, Displays, and Control Functions (Sheet 2 of 2)

Equipment Name	MCR/RSC Alarm	MCR Display	MCR/RSC Control Function	RSC Display
Excess Letdown Isolation Valve (CVS-AOV-221, 222)	No	Yes	Yes	Yes
CVCS Letdown Line Isolation Valve (CVS-LCV-361)	No	Yes	Yes	Yes
CVCS Letdown Line Isolation Valve (CVS-LCV-362)	No	Yes	Yes	Yes

Table 2.4.6-5 Chemical and Volume Control System Inspections, Tests, Analyses, and Acceptance Criteria (Sheet 1 of 6)

Design Commitment	Inspections, Tests, Analyses	Acceptance Criteria
1. The functional arrangement of the CVCS is as described in the Design Description of Subsection 2.4.6.1 and in Table 2.4.6-1 and as shown ~~on~~ in Figure 2.4.6-1.	1. ~~An i~~Inspection of the as-built CVCS will be performed.	1. The as-built CVCS conforms ~~with~~ to the functional arrangement as described in the Design Description of ~~this~~ Subsection 2.4.6.1 and in Table 2.4.6-1 and as shown in~~on~~ Figure 2.4.6-1.
2.a.i The ASME Code Section III components of the CVCS, identified in Table 2.4.6-2, are fabricated, installed and inspected in accordance with ASME Code Section III requirements.	2.a.i ~~An i~~Inspection of the as-built ASME Code Section III components of the CVCS, identified in Table 2.4.6-2, will be performed.	2.a.i The ASME Code Section III data report(s) (certified, when required by ASME Code) and inspection reports (including N-5 Data Reports where applicable) exist and conclude that the as-built ASME Code Section III components of the CVCS identified in Table 2.4.6-2 are fabricated, installed, and inspected in accordance with ASME Code Section III requirements.
2.a.ii The ASME Code Section III components of the CVCS identified in Table 2.4.6-2 are reconciled with the design requirements.	2.a.ii A reconciliation analysis of the components identified in Table 2.4.6-2 using as-designed and as-built information and ASME Code Section III design report(s) (NCA-3550) will be performed.	2.a.ii The ASME Code Section III design report(s) (certified, when required by ASME Code) exist and conclude that design reconciliation has been completed in accordance with the ASME Code, for the as-built ASME Code Section III components of the CVCS identified in Table 2.4.6-2. ~~are reconciled with the design requirements.~~ The report documents the results of the reconciliation analysis.
2.b.i The ASME Code Section III piping of the CVCS, including supports, identified in Table 2.4.6-3, is fabricated, installed, and inspected in accordance with ASME Code Section III requirements.	2.b.i ~~An i~~Inspection of the as-built ASME Code Section III piping of the CVCS, including supports, identified in Table 2.4.6-3, will be performed.	2.b.i The ASME Code Section III data report(s) (certified when required by ASME Code) and inspection reports (including N-5 Data Reports where applicable) exist and conclude that the as-built ASME Code Section III piping of the CVCS, including supports, identified in Table 2.4.6-3 is fabricated, installed, and inspected in accordance with ASME Code Section III requirements.

Table 2.4.6-5 Chemical and Volume Control System Inspections, Tests, Analyses, and Acceptance Criteria (Sheet 2 of 6)

Design Commitment	Inspections, Tests, Analyses	Acceptance Criteria
2.b.ii The ASME Code Section III piping of the CVCS, including supports, identified in Table 2.4.6-3 ~~are~~is reconciled with the design requirements.	2.b.ii A reconciliation analysis of the piping of the CVCS, including supports, identified in Table 2.4.6-3, using as-designed and as-built information and ASME Code Section III design report(s) (NCA-3550) will be performed.	2.b.ii The ASME Code Section III design report(s) (certified, when required by ASME Code) exist and conclude that design reconciliation has been completed in accordance with the ASME Code, for the as-built ASME Code Section III piping of the CVCS, including supports, identified in Table 2.4.6-3. ~~is reconciled with the design requirements.~~ The report documents the results of the reconciliation analysis.
3.a Pressure boundary welds in ASME Code Section III components, identified in Table 2.4.6-2, meet ASME Code Section III requirements for non-destructive examination of welds.	3.a Inspections of the as-built pressure boundary welds in ASME Code Section III components identified in Table 2.4.6-2, will be performed in accordance with the ASME Code Section III.	3.a The ASME Code Section III code reports exist and conclude that the ASME Code Section III requirements are met for non-destructive examination of the as-built pressure boundary welds in ASME Code Section III components identified in Table 2.4.6-2.
3.b Pressure boundary welds in ASME Code Section III piping, identified in Table 2.4.6-3, meet ASME Code Section III requirements for non-destructive examination of welds.	3.b Inspections of the as-built pressure boundary welds in ASME Code Section III piping identified in Table 2.4.6-3 will be performed in accordance with the ASME Code Section III.	3.b The ASME Code Section III code reports exist and conclude that the ASME Code Section III requirements are met for non-destructive examination of the as-built pressure boundary welds in ASME Code Section III piping identified in Table 2.4.6-3.
4.a The ASME Code Section III components, identified in Table 2.4.6-2, retain their pressure boundary integrity at their design pressure.	4.a A hydrostatic test will be performed on the as-built components, identified in Table 2.4.6-2, required by the ASME Code Section III to be hydrostatically tested.	4.a ASME Code Data Report(s) exist and conclude that ~~T~~the results of the hydrostatic test of the as-built components identified in Table 2.4.6-2 as ASME Code Section III conform to~~with~~ the requirements of the ASME Code Section III.

4.b The ASME Code Section III piping, identified in Table 2.4.6-3, retains its pressure boundary integrity at its design pressure.	4.b A hydrostatic test will be performed on the as-built piping, identified in Table 2.4.6-3, required by the ASME Code Section III to be hydrostatically tested.	4.b ASME Code Data Report(s) exist and conclude that ~~T~~the results of the hydrostatic test of the as-built piping identified in Table 2.4.6-3 as ASME Code Section III conform to ~~with~~ the requirements of the ASME Code, Section III.

Table 2.4.6-5 Chemical and Volume Control System Inspections, Tests, Analyses, and Acceptance Criteria (Sheet 3 of 6)

Design Commitment	Inspections, Tests, Analyses	Acceptance Criteria
5.a The seismic Category I equipment~~,~~ identified in Table 2.4.6-2~~,~~ can ~~is designed to~~ withstand seismic design basis loads without loss of safety function.	5.a.i Inspections will be performed to verify that the as-built seismic Category I ~~as-built~~ equipment ~~and valves~~ identified in Table 2.4.6-2 is ~~are~~ located in a seismic Category I structure~~the containment or reactor building~~.	5.a.i The as-built seismic Category I ~~as-built~~ equipment identified in Table 2.4.6-2 is located in a seismic Category I structure.~~the containment or reactor building.~~
	5.a.ii Type tests, analyses, ~~and/~~or a combination of type tests and analyses of ~~the~~ seismic Category I equipment identified in Table 2.4.6-2 will be performed using analytical assumptions, or will be performed under conditions, which bound the seismic design basis requirements.	5.a.ii A report exists and ~~The results of the type tests and/or analyses~~ concludes that the seismic Category I equipment identified in Table 2.4.6-2 can withstand seismic design basis loads without loss of safety function.
	5.a.iii ~~An i~~Inspections and analyses will be performed to verify that ~~on~~ the as-built seismic Category I equipment identified in Table 2.4.6-2, including anchorages, is seismically bounded by the tested or analyzed conditions.	5.a.iii A report exists and concludes that ~~T~~the as-built seismic Category I equipment identified in Table 2.4.6-2, including anchorages, is seismically bounded by the tested or analyzed conditions.
5.b ~~Each of t~~The seismic Category I piping, including supports, identified in Table 2.4.6-3 can ~~is designed to~~ withstand ~~combined normal and~~ seismic design basis loads without a loss of its safety function.	5.b.i Inspections will be performed to verify that the as-built seismic Category I piping, including supports, identified in Table 2.4.6-3 is~~are~~ supported by a seismic Category I structure(s).	5.b.i ~~Reports(s) document that each of t~~The as-built seismic Category I piping, including supports, identified in Table 2.4.6-3 is supported by a seismic Category I structure(s).

	5.b.ii	Inspections and analyses will be performed to verifyfor the existence of a report verifying that the as-built seismic Category I piping, including supports, identified in Table 2.4.6-3 can withstand combined normal and seismic design basis loads without a loss of its safety function.	5.b.ii	A report exists and concludes that each of the as-built seismic Category I piping, including supports, identified in Table 2.4.6-3 can withstand combined normal and seismic design basis loads without a loss of its safety function.

Table 2.4.6-5 Chemical and Volume Control System Inspections, Tests, Analyses, and Acceptance Criteria (Sheet 4 of 6)

Design Commitment	Inspections, Tests, Analyses	Acceptance Criteria
6.a The Class 1E equipment identified in Table 2.4.6-2 as being qualified for a harsh environment can ~~is designed to~~ withstand the environmental conditions that would exist before, during, and following a design basis accident ~~event~~ without loss of safety function for the time required to perform the safety function.	6.a.i Type tests ~~and/~~or a combination of type tests and analyses using the design environmental conditions, or under the conditions which bound the design environmental conditions, will be performed on Class 1E equipment identified in Table 2.4.6-2 as being qualified ~~located in~~ for a harsh environment.	6.a.i ~~The results of the type tests and/or analyses~~A report exists and concludes that the Class 1E equipment identified in Table 2.4.6-2 as being qualified for a harsh environment can withstand the environmental conditions that would exist before, during, and following a design basis accident~~event~~ without loss of safety function for the time required to perform the safety function.
	6a.ii Inspection~~s~~ will be performed ~~on~~ of the as-built Class 1E equipment identified in Table 2.4.6-2 as being qualified for a harsh environment and the associated wiring, cables, and terminations located in a harsh environment.	6.a.ii The as-built Class 1E equipment and the associated wiring, cables, and terminations identified in Table 2.4.6-2 as being qualified for a harsh environment are bounded by type tests ~~and/~~or a combination of type tests and analyses.
6.b ~~The~~ Class 1E equipment, identified in Table 2.4.6-2, is powered from ~~their~~its respective Class 1E division.	6.b A test will be performed on each division of the as-built Class 1E equipment identified in Table 2.4.6-2 by providing a simulated test signal only in the Class 1E division under test.	6.b The simulated test signal exists at the as-built Class 1E equipment identified in Table 2.4.6-2 under test.
6.c Separation is provided between redundant divisions of CVCS Class 1E cables~~divisions~~, and between Class 1E ~~divisions~~cables and non-Class 1E cables.	6.c Inspections of the as-built Class 1E divisional cables will be performed.	6.c Physical separation or electrical isolation is provided in accordance with R.G. 1.75 between the as-built cables of redundant Class 1E divisions and between Class 1E ~~divisions~~ cables and non-Class 1E cables.
7. Deleted.	7. Deleted.	7. Deleted.

8.a The CVCS provides makeup capability to maintain the RCS volume.	8.a A test of the as-built CVCS will be performed to measure the makeup flow rate.	8.a Each as-built CVCS charging pump delivers ~~provides~~ a flow rate to the RCS of greater than or equal to 160 gpm at normal operating pressure of RCS.

Table 2.4.6-5 Chemical and Volume Control System Inspections, Tests, Analyses, and Acceptance Criteria (Sheet 5 of 6)

Design Commitment	Inspections, Tests, Analyses	Acceptance Criteria
8.b Deleted.~~The CVCS provides pressurizer auxiliary spray water for depressurization.~~	8.b Deleted.~~A test of the as-built CVCS will be performed by aligning a flow path from each CVCS charging pump to the pressurizer auxiliary spray.~~	8.b Deleted.~~Each as-built CVCS charging pump provides spray flow to the pressurizer.~~
8.c The CVCS supplies seal water to the RCP seals.	8.c A test of the as-built CVCS will be performed by aligning a flow path to each RCP.	8.c Each as-built CVCS charging pump provides a flow rate of greater than or equal to 8 gpm to each RCP ~~seal~~.
9. Controls are provided~~exist~~ in the MCR to open and close the remotely operated valves identified in Table 2.4.6-2~~ to perform active functions~~.	9. Tests will be performed on the as-built remotely operated valves ~~listed~~identified in Table 2.4.6-2 using controls in the as-built MCR.	9. Controls ~~exist~~ in the as-built MCR ~~to~~ open and close the as-built remotely operated valves identified in Table 2.4.6-2~~to perform active functions~~.
10.a. The motor-operated valves, air-operated valves and check valves~~,~~ identified in Table 2.4.6-2~~,~~ as having an active safety function perform an active safety function to change position as indicated in the table.	10.a.i Type ~~T~~tests or a combination of type tests and analyses of the motor-operated valves and air-operated valves identified in Table 2.4.6-2 as having an active safety function will be performed that demonstrate the capability of the valve to operate under its design conditions.	10.a.i A report exists and concludes that ~~E~~each motor-operated and air-operated valve identified in Table 2.4.6-2 as having an active safety function changes position as indicated in Table 2.4.6-2 under design conditions.
	10.a.ii Tests of the as-built motor-operated valves and air-operated valves identified in Table 2.4.6-2 as having an active safety function will be performed under pre-operational flow, differential pressure, and temperature conditions.	10.a.ii Each as-built motor-operated and air-operated valve identified in Table 2.4.6-2 as having an active safety function changes position as indicated in Table 2.4.6-2 under pre-operational test conditions.

	10.a.iii Inspections will be performed of the as-built motor-operated and air-operated valves identified in Table 2.4.6-2 as having an active safety function.	10.a.iii Each as-built motor-operated and air-operated valve identified in Table 2.4.6-2 as having an active safety function is bounded by the type tests, or a combination of type tests and analyses.
	10.a.~~iii~~iv Tests of the as-built check valves ~~with active safety functions~~ identified in Table 2.4.6-2 as having an active safety function will be performed under pre-operational test pressure, temperature, and fluid flow conditions.	10.a.~~iii~~iv Each as-built check valve identified in Table 2.4.6-2 as having an active safety function changes position as indicated in Table 2.4.6-2.
10.b After loss of motive power, the remotely operated valves, identified in Table 2.4.6-2, assume the indicated loss of motive power position.	10.b Tests of the as-built remotely-operated valves identified in Table 2.4.6-2 will be performed under the conditions of loss of motive power.	10.b Upon loss of motive power, each as-built remotely operated valve identified in Table 2.4.6-2 assumes the indicated loss of motive power position.

Table 2.4.6-5 Chemical and Volume Control System Inspections, Tests, Analyses, and Acceptance Criteria (Sheet 6 of 6)

Design Commitment	Inspections, Tests, Analyses	Acceptance Criteria
11. Controls are provided~~exist~~ in the MCR to start and stop the CVCS pumps identified in Table 2.4.6-4.	11. Tests will be performed on the as-built CVCS pumps identified in Table 2.4.6-4 using controls in the as-built MCR.	11. Controls ~~exist~~ in the as-built MCR ~~to~~ start and stop the as-built CVCS pumps ~~listed~~identified in Table 2.4.6-4.
12. ~~MCR a~~Alarms and displays ~~of the parameters~~ identified in Table 2.4.6-4 are provided~~can be retrieved~~ in the MCR.	12. Inspection~~s~~ will be performed for retrievability of the ~~CVCS parameters~~alarms and displays identified in Table 2.4.6-4 in the as-built MCR.	12. ~~MCR a~~Alarms and displays identified in Table 2.4.6-4 can be retrieved in the as-built MCR.
13. ~~RSC a~~Alarms, displays and controls ~~are~~ identified in Table 2.4.6-4 are provided in the RSC.	13.i Inspection~~s~~ will be performed for retrievability of the ~~as-built RSC~~ alarms and~~,~~ displays identified in Table 2.4.6-4 in the as-built RSC~~ and controls will be performed~~.	13.i Alarms and~~,~~ displays identified in Table 2.4.6-4 can be retrieved~~ and controls exist on~~ in the as-built RSC.~~ as identified in Table 2.4.6-4~~.
	13.ii Tests of the as-built RSC control functions identified in Table 2.4.6-4 will be performed.	13.ii Controls in the as-built RSC operate the as-built equipment identified in Table 2.4.6-4 with an RSC control function.
14.a Deleted.~~The materials of construction of the ASME Code Section III, Class 1 components, identified in Table 2.4.6-2, are in accordance with ASME Code requirements.~~	14.a Deleted.~~Inspection of the certified material test reports will be performed.~~	14.a Deleted. ~~The materials of construction of the ASME Code Section III, Class 1 components identified in Table 2.4.6-2 conform to the requirements of the ASME Code.~~
14.b Deleted.~~The materials of construction of the ASME Code Section III, Class 1 piping, identified in Table 2.4.6-3, are in accordance with ASME Code requirements.~~	14.b Deleted. ~~Inspection of the certified material test reports will be performed.~~	14.b Deleted.~~The materials of construction of the ASME Code Section III, Class 1 piping identified in Table 2.4.6-3 conform to the requirements of the ASME Code.~~

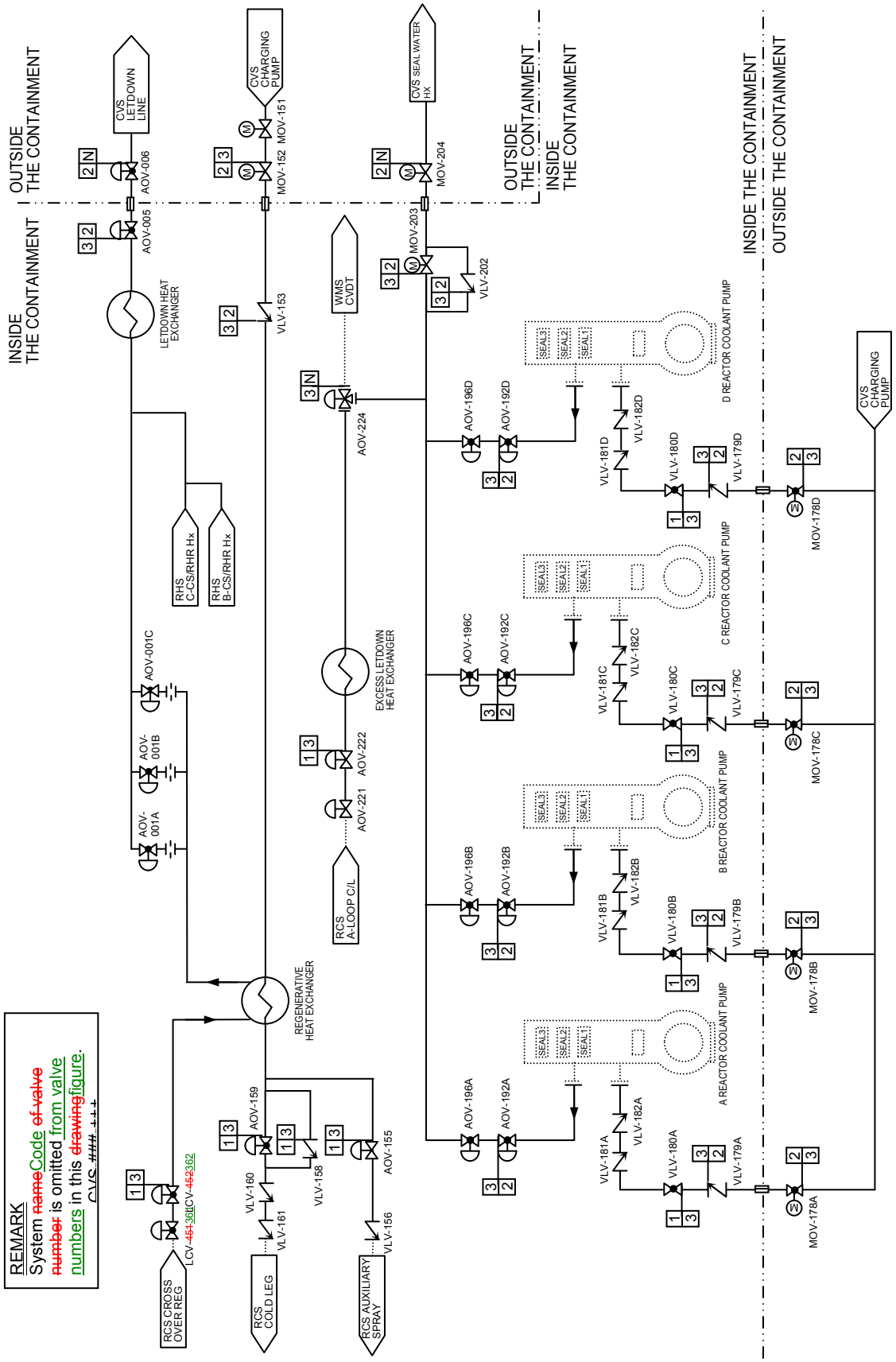

Figure 2.4.6-1 Chemical and Volume Control System (Sheet 1 of 2)

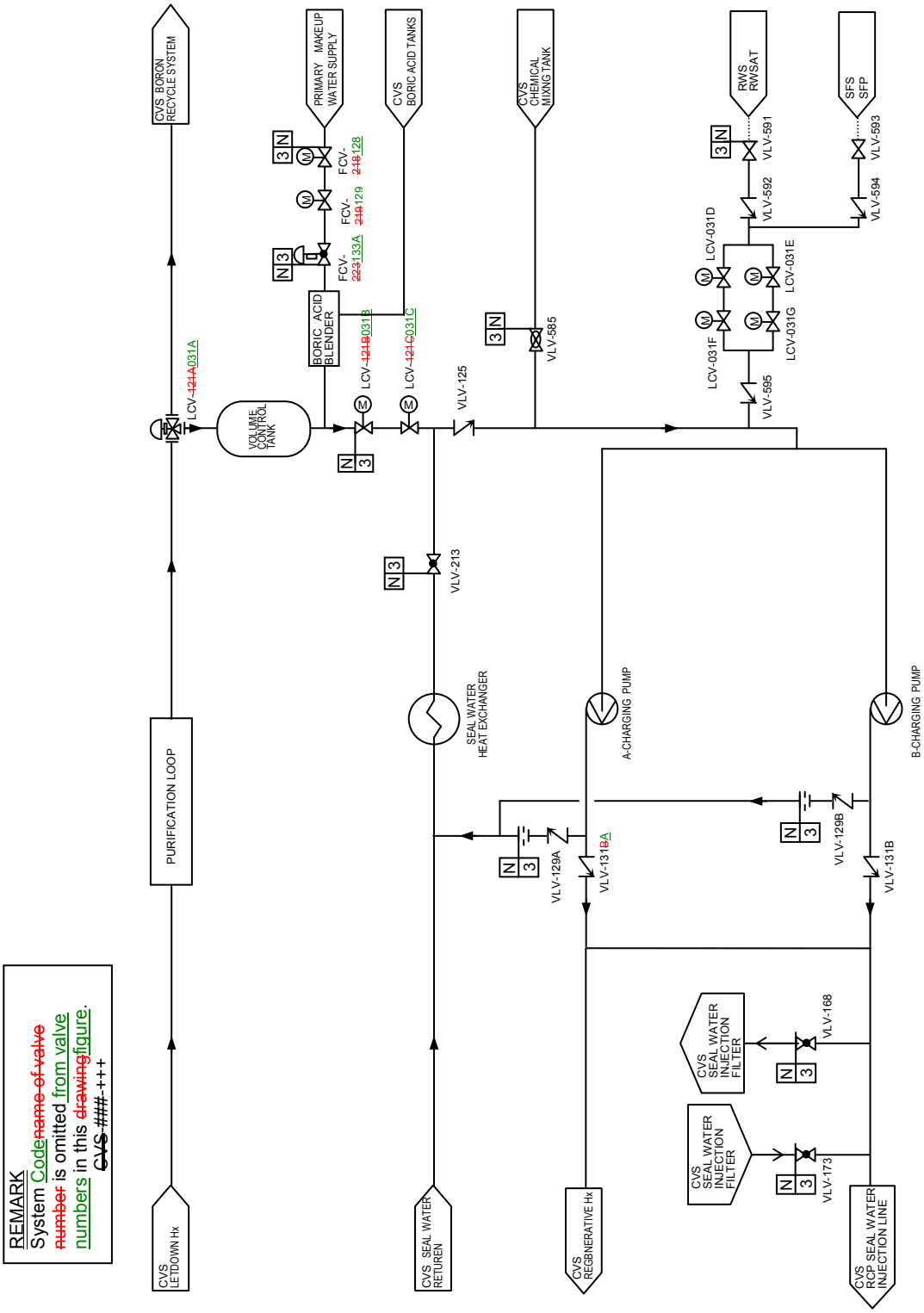

REMARK
System Code~~name of valve number~~ is omitted from valve numbers in this ~~drawing~~figure.
~~CVS ###~~ +++

Figure 2.4.6-1 Chemical and Volume Control System (Sheet 2 of 2)

Tier 1 Changes Explanation/Basis Document
Tier 1, Section 2.4.6

Item No.	Explanation/Basis for Change
Design Description 2.4.6.1	
A	Editorial This change does not impact the response to RAI 184, Question 14.03.07-27.
B	Text deleted as the actuation signals are in Table 2.4.6-2.
C	CVCS Nonsafety-Related Functions: - Text deleted because it is not consistent with SRP 14.3 guidance regarding selection of Tier 1 information.
D	Note 1. Note 2. See items A and GG.
E	Note 1. Note 2. See item I I.
F	Note 1. See item H.
G	Text deleted as this information is inconsistent with SRP 14.3 guidance. This change alters the response to RAI 184, Question 14.03.07-27.
H	Note 1. Note 2. See item F for the first two sentences. See item I I for the last sentence.
I	Text deleted because it is not consistent with SRP 14.3 guidance regarding selection of Tier 1 information. See item HH and KK.
J	Note 1. Note 2. See items U and V.
K	Note 1. Note 2. See item M,N,O,P,S, and T.
L	Note 1. Note 2. See item Q and R.
M	Note 1. See item K and W.
N	Note 1. See item K.
O	Note 1. See item K and W.
P	Note 1. See item K.
Q	Note 1. See item L.
R	Note 1. See item L.
S	Note 1. See item K.
T	Note 1. See item K.
U	Note 1. See item J.
V	Note 1. See item J.
W	Note 1. Note 2. See items M, O, PP, and QQ as well as bases for ITAAC #14.a below.
X	Delete the System Operation subsection as this information is too detailed for Tier 1 and not consistent with SRP 14.3 guidance.
Y	Note 1. Note 2. See item JJ, MM, and NN.
Z	Delete the Logic subsection as the containment isolation feature is discussed in general in the Design Description introductory information as well as Table 2.4.6-2. Note 1. Note 2. See items KK and LL. This change alters the response to RAI 384, Question 09.03.04-17.
AA	Delete the Interlocks subsection as the containment isolation feature is described in the Design Description introductory information.
BB	Note 1. Note 2. See item DD and EE.
CC	Note 1.
DD	Note 1. See item BB.
EE	Note 1. See item BB.
FF	Note 1.

Item No.	Explanation/Basis for Change
GG	Note 1. See items A (water quality) and D (volume control).
HH	Note 1. See item PP. This ITAAC 8.b pertained to providing the PZR auxiliary spray function but has been deleted because it is not consistent with SRP 14.3 guidance regarding selection of Tier 1 information..
I I	Note 1. See item E and item H.
JJ	Note 1. See item Y.
KK	Note 1. See item Z and I.
LL	Note 1. See item Z.
MM	Note 1. See item Y.
NN	Note 1. See item Y.
OO	Note 1.
PP	Note 1. See item W, M and bases for ITAAC #14.a below.
QQ	Note 1. See item W, M and bases for ITAAC #14.b below.
RR	Delete to remove negative statement.
SS	Statement is redundant with what is provided in Table 2.4.6-5 ITAAC acceptance criteria.
TT	Text added to reference the ITAAC in Tier 1 Section 2.3.
Table 2.4.6-1	
	No change.
Table 2.4.6-2	
	Sheets 4 and 5 have been revised to correct an error.
Table 2.4.6-3	
	No change.
Table 2.4.6-4	
	No change.
ITAAC Table 2.4.6-5	
1	DC, ITA, and AC - Changes made to align with generic wording of the Functional Arrangement ITAAC to provide clarity and consistency. [RIS p7, ITAAC Scope, 2nd Bullet]
2.a.i	ITA and AC - Changes made to align with generic wording of the ASME Code Section III ITAAC to provide clarity and consistency. [RIS p7, ITAAC Scope, 2nd Bullet] These changes do not impact the responses to DCD RAI 242, Question 14.03.03-5 or RAI 404, Question 14.03.03-20.
2.a.ii	ITA and AC - Changes made to align with generic wording of the ASME Code Section III ITAAC to provide clarity and consistency. [RIS p7, ITAAC Scope, 2nd Bullet] These changes in the AC wording alter the responses to DCD RAI 242, Question 14.03.03-5 and DCD RAI 404, Question 14.03.03-20.

Tier 1 Changes Explanation/Basis Document
Tier 1, Section 2.4.6

Item No.	Explanation/Basis for Change
2.b.i	ITA - Changes made to align with generic wording of the ASME Code Section III ITAAC to provide clarity and consistency. [RIS p7, ITAAC Scope, 2nd Bullet] These changes alter the responses to DCD RAI 242, Question 14.03.03-6 and DCD RAI 404, Question 14.03.03-21.
2.b.ii	ITA and AC - Changes made to align with generic wording of the ASME Code Section III ITAAC to provide clarity and consistency. [RIS p7, ITAAC Scope, 2nd Bullet] The changes in AC wording alter the responses to DCD RAI 242, Question 14.03.03-6 and DCD RAI 404, Question 14.03.03-21.
3.a	ITA and AC - Changes made to align with generic wording of the ASME Code Section III ITAAC to provide clarity and consistency. [RIS p7, ITAAC Scope, 2nd Bullet] These changes do not impact the response to DCD RAI 242, Question 14.03.03-8.
3.b	ITA and AC - Changes made to align with generic wording of the ASME Code Section III ITAAC to provide clarity and consistency. [RIS p7, ITAAC Scope, 2nd Bullet] These changes do not impact the response to DCD RAI 242, Question 14.03.03-8.
4.a	ITA - Changes made to align with generic wording of the ASME Code Section III ITAAC to provide clarity and consistency. [RIS p7, ITAAC Scope, 2nd Bullet] AC - Added "…reports exist and conclude that…" [RIS p3, Language, 5th bullet]
4.b	ITA - Changes made to align with generic wording of the ASME Code Section III ITAAC to provide clarity and consistency. [RIS p7, ITAAC Scope, 2nd Bullet] AC - Added "…reports exist and conclude that…" [RIS p3, Language, 5th bullet]
5.a	DC, ITA, AC - Changes made to align with generic wording of the Seismic Category I ITAAC to provide clarity and consistency. [RIS p7, ITAAC Scope, 2nd Bullet] These changes alter the responses to DCD RAI 192, Question 14.03.04-13 and DCD RAI 193, Question 14.03.04-19.
5.b	DC, ITA, AC - Changes made to align with generic wording of the Seismic Category I ITAAC to provide clarity and consistency. [RIS p7, ITAAC Scope, 2nd Bullet]. These changes alter the responses to DCD RAI 192, Question 14.03.04-13 and DCD RAI 452, Question 14.03.02-12 as well as UAP-HF-10043.

Tier 1 Changes Explanation/Basis Document
Tier 1, Section 2.4.6

Item No.	Explanation/Basis for Change
6.a	DC, ITA, AC - Changes made to align with generic wording of the EQ ITAAC to provide clarity and consistency. [RIS p7, ITAAC Scope, 2nd Bullet] The changes alter the responses to DCD RAI 193, Question 14.03.04-22 and DCD RAI 511, Question 3.11-21.
6.b	DC and ITA - Changes made to align with generic wording of the Electrical Separation ITAAC to provide clarity and consistency. [RIS p7, ITAAC Scope, 2nd Bullet] These changes do not impact the response to DCD RAI 193, Question 14.03.04-23.
6.c	DC and AC - Changes made to align with generic wording of the Electrical Separation ITAAC to provide clarity and consistency. [RIS p7, ITAAC Scope, 2nd Bullet] The changes in DC and AC wording alter the response to DCD RAI 191, Question 14.03.04-9.
7	No change.
8.a	AC - Change made to ensure clarity of the requirements necessary for acceptance. [RIS, Standardization, 2nd bullet and Scope, 2nd bullet]
8.b	DC, ITA and AC - ITAAC deleted because it is not consistent with SRP 14.3 guidance regarding selection of Tier 1 information. [RIS, p4, Language, 7th bullet.]
8.c	AC - Change made for consistency with ITA. [RIS, p7, Standardization, 4th bullet].
9	DC, ITA and AC - Changes made to align with generic wording of the MCR Controls ITAAC to provide clarity and consistency. [RIS p7, ITAAC Scope, 2nd Bullet] These changes alter the response to DCD RAI 193, Question 14.03.04-29.
10.a	DC, ITA and AC - Changes made to align with generic wording of the MOV ITAAC to provide clarity and consistency. [RIS p7, ITAAC Scope, 2nd Bullet] These changes alter the response to DCD RAI 193, Question 14.03.04-28.
10.b	ITA - Changes made to align with generic wording of the MOV ITAAC to provide clarity and consistency. [RIS p7, ITAAC Scope, 2nd Bullet]
11	DC, ITA, AC - Changes made to align with generic wording of the MCR Controls ITAAC to provide clarity and consistency. [RIS p7, ITAAC Scope, 2nd Bullet] These changes alter the response to DCD RAI 193, Question 14.03.04-29.

Item No.	Explanation/Basis for Change
12	DC, ITA, AC - Changes made to align with generic wording of the MCR Controls ITAAC to provide clarity and consistency. [RIS p7, ITAAC Scope, 2nd Bullet] These changes alter the response to DCD RAI 193, Question 14.03.04-30.
13	DC, ITA, AC - Changes made to align with generic wording of the RSC Controls ITAAC to provide clarity and consistency. [RIS p7, ITAAC Scope, 2nd Bullet] These changes alter the responses to DCD RAI 193, Question 14.03.04-30 and UAP-HF-10043.
14.a	ITA - This ITAAC is deleted as the information intended to be verified by this ITAAC is redundant to information which will be verified as part of the generic ASME Components and Piping ITAAC, #2.a [or 2.b], which states the ASME Code Section III components [or piping] of the CVCS system, identified in Table 2.4.6-2 [or Table 2.4.6-3], are fabricated, installed, and inspected in accordance with ASME Code Section III requirements. These changes alter the response to DCD RAI 242, Question 14.03.03-10.
14.b	ITA - This ITAAC is deleted as the information intended to be verified by this ITAAC is redundant to information which will be verified as part of the generic ASME Components and Piping ITAAC, #2.a [or 2.b], which states the ASME Code Section III components [or piping] of the CVCS system, identified in Table 2.4.6-2 [or Table 2.4.6-3], are fabricated, installed, and inspected in accordance with ASME Code Section III requirements. These changes alter the response to DCD RAI 242, Question 14.03.03-10.
Figure 2.4.6-1	
	Editorial changes made to "Remark" box. Correction of following valve tag numbers to be consistent with Tier 2. LCV-451/452 to LCV-361/362 LCV-121A/B/C to LCV-031A/B/C FCV-218/219/223 to FCV-128/129/133A VLV-131B to VLV-131 A on discharge line of A-charging pump

Note 1: Revised to provide consistency between the Design Description (DD) and the Design Commitment (DC) in the ITAAC table. Revised text to include only the necessary attributes for ITAAC.

Note 2: Text relocated within the DD section to align with the sequence and numbering of the corresponding DC in the ITAAC table.