AREVA	Form 3.2-1 Calculation Cover Sheet TIP 3.2 (Revision 2)[1]	Calculation No.:	P04F.M2.02-02
		Revision No.:	0
		Page 1 of 65	

DCR NO (if applicable) : NA	PROJECT NAME: HalfPACT Shielded Container
PROJECT NO: P04F.M2.02	CLIENT: Washington TRU Solutions

CALCULATION TITLE: HalfPACT Shielded Container Criticality Analysis

SUMMARY DESCRIPTION:

1) Calculation Summary: This calculation presents the criticality analysis for the HalfPACT with a payload of three shielded containers. Two scenarios are considered: (1) 325 FGE for manually compacted waste with less than 1% by weight beryllium, and (2) 245 FGE for machine compacted waste with less than 1% by weight beryllium. The most reactive condition is below the USL, and a CSI=0 is justified.

2) Storage Media Description: One compact disc.

If original issue, is licensing review per TIP 3.5 required?

Yes ☐ No ☒ (explain below) Licensing Review No.: _____

This is not a Part 72 project. Also, PacTec is not responsible for the HalfPACT license.

Software Utilized:	SCALE	Version: 5.0
	USLSTATS	Version: 1.4.2

Calculation is complete: Originator Name and Signature: RJ Migliore	Date: 11/7/07
Calculation has been checked for consistency, completeness and correctness: Checker Name and Signature: M Mason	Date: 11/7/07
Calculation is approved for use: Project Engineer Name and Signature: GL Clark	Date: 12/18/07

TABLE OF CONTENTS

TABLE OF CONTENTS **2**

LIST OF TABLES **3**

1.0 INTRODUCTION **4**

2.0 DESCRIPTION OF CRITICALITY DESIGN **4**

2.1 DESIGN FEATURES 4

2.2 SUMMARY TABLE OF CRITICALITY EVALUATION 4

2.3 CRITICALITY SAFETY INDEX 5

3.0 FISSILE MATERIAL CONTENTS **6**

4.0 GENERAL CONSIDERATIONS **11**

4.1 MODEL CONFIGURATION 11

4.2 MATERIAL PROPERTIES 15

4.3 COMPUTER CODES AND CROSS-SECTION LIBRARIES 15

4.4 DEMONSTRATION OF MAXIMUM REACTIVITY 15

5.0 SINGLE PACKAGE EVALUATION **17**

5.1 SINGLE PACKAGE CONFIGURATION 17

5.1.1 NCT Single Package Configuration *17*

5.1.2 HAC Single Package Configuration *17*

5.2 SINGLE PACKAGE RESULTS 18

6.0 EVALUATION OF PACKAGE ARRAYS UNDER NORMAL CONDITIONS OF TRANSPORT **26**

6.1 NCT ARRAY CONFIGURATION 26

6.2 NCT ARRAY RESULTS 26

7.0 PACKAGE ARRAYS UNDER HYPOTHETICAL ACCIDENT CONDITIONS **30**

7.1 HAC ARRAY CONFIGURATION 30

7.2 HAC ARRAY RESULTS 33

8.0 FISSILE MATERIAL PACKAGES FOR AIR TRANSPORT **43**

9.0 BENCHMARK EVALUATIONS **43**

9.1 APPLICABILITY OF BENCHMARK EXPERIMENTS 43

9.2 BIAS DETERMINATION 44

10.0 APPENDIX 53

10.1 REFERENCES 53

10.2 SAMPLE MODELS 54

10.3 COMPUTER RUN RECORD 55

LIST OF FIGURES

Figure 4-1 – NCT Single Package Model 13

Figure 4-2 – HAC Single Package Model 14

Figure 5-1 – NCT Single Package Geometry 23

Figure 5-2 – HAC Single Package Geometry, Case G 24

Figure 5-3 – HAC Single Package Geometry, Case H 25

Figure 6-1 – NCT Array Geometry 29

Figure 7-1 – HAC Array Geometry, Case G 40

Figure 7-2 – HAC Array Geometry, Case H 42

LIST OF TABLES

Table 2-1 – Summary of Criticality Evaluation 5

Table 3-1 – Case G Fissile Sphere KENO Input [1] 9

Table 3-2 – Case G Fissile Sphere Number Densities 9

Table 3-3 – Case H Fissile Sphere Number Densities 10

Table 5-1 – NCT Single Package Results, Case G, 325 FGE 19

Table 5-2 – NCT Single Package Results, Case H, 245 FGE 19

Table 5-3 – HAC Single Package Results, Case G, 325 FGE 20

Table 5-4 – HAC Single Package Results, Case H, 245 FGE 22

Table 6-1 – NCT Array Results, Case G, 325 FGE 27

Table 6-2 – NCT Array Results, Case H, 245 FGE 28

Table 7-1 – HAC Array Results, Case G, 325 FGE 34

Table 7-2 – HAC Array Results, Case H, 245 FGE 38

Table 9-1 – Benchmark Experiments Utilized 46

Table 9-2 – Benchmark Experiment Data 47

Table 9-3 – Calculation of USL 52

1.0 Introduction

The HalfPACT license will be modified to ship three shielded containers containing remote-handled transuranic (RH-TRU) material. Two scenarios are considered: (1) manually compacted (i.e., not machine compacted) waste, and (2) machine compacted waste. A maximum 325 fissile gram equivalent (FGE) of Pu-239 is justified for manually compacted waste, while a lower limit of 245 FGE is justified for machine compacted waste. The methodology and assumptions utilized in the existing HalfPACT Safety Analysis Report (SAR) is also utilized in the current analysis. The following analyses demonstrate that this configuration complies with the requirements of 10 CFR §71.55 and §71.59. The criticality safety index, per 10 CFR §71.59, is 0.

2.0 Description of Criticality Design

2.1 Design Features

No special design features are required to maintain criticality safety, and no poisons are utilized in the package. The separation provided by the HalfPACT is sufficient to maintain criticality safety.

2.2 Summary Table of Criticality Evaluation

The upper subcritical limit (USL) for ensuring that the HalfPACT is acceptably subcritical, as determined in Section 9.0, *Benchmark Evaluations*, is:

$$USL = 0.9377$$

The package is considered to be acceptably subcritical if the computed k_{safe} (k_s), which is defined as $k_{effective}$ (k_{eff}) plus twice the statistical uncertainty (σ), is less than the USL, or:

$$k_s = k_{eff} + 2\sigma < USL$$

The USL is determined on the basis of a benchmark analysis and incorporates the combined effects of code computational bias, the uncertainty in the bias based on benchmark-model uncertainties, and an administrative margin. The results of the benchmark analysis indicate that the USL is adequate to ensure subcriticality of the package.

Fully flooded conditions are utilized in both the normal conditions of transport (NCT) and hypothetical accident condition (HAC) models. Cases are developed both for manually compacted and machine compacted waste. Manually compacted waste models utilize 325 FGE Pu-239 and reflector material composed of 25% polyethylene, 1% beryllium, and 74% water (by volume). Machine compacted waste models utilize 245 FGE Pu-239 and reflector material composed of 99% polyethylene and 1% beryllium (by volume).

The maximum results of the criticality calculations are summarized in Table 2-1. The maximum calculated k_s under HAC is 0.9372, which occurs for the optimally moderated HAC single package model with manually compacted waste.

Table 2-1 – Summary of Criticality Evaluation

Limit	Case G 325 FGE Manually Compacted Waste	Case H 245 FGE Machine Compacted Waste
Normal Conditions of Transport (NCT)		
	k_s	k_s
Single Unit Maximum	0.9354	0.9302
Infinite Array Maximum	0.9355	0.9313
Hypothetical Accident Conditions (HAC)		
	k_s	k_s
Single Unit Maximum	0.9372	0.9298
Infinite Array Maximum	0.9368	0.9340
USL = 0.9377		

2.3 Criticality Safety Index

A criticality safety index (CSI) of 0 is justified. The CSI is defined in 10 CFR 71.59 [11] as 50/N, where N = infinite for a CSI = 0. Both the NCT and HAC array cases utilize an infinite number of packages.

3.0 Fissile Material Contents

The quantities of all fissile isotopes other than Pu-239 present in the waste material and other authorized payloads may be converted to an FGE using the conversion factors outlined in the CH-TRAMPAC [2]. For modeling purposes, the package is assumed to contain Pu-239 at the FGE limit. The fissile composition of the payload will typically be as follows:

Nuclide	Weight-Percent
Pu-238	Trace
Pu-239	93.0
Pu-240	5.8
Pu-241	0.4
Pu-242	Trace
Am-241	Trace
All other fissile isotopes	0.7

No credit is taken for parasitic neutron absorption in waste materials or dunnage. The entire contents of a HalfPACT package are conservatively modeled as an optimally moderated sphere of Pu-239 as determined by varying the H/Pu atom ratio. The size of the sphere is calculated based on the H/Pu ratio and the Pu mass.

Two general cases are developed. In Case G[1], the waste stream is manually compacted (i.e, not machine compacted) and a limit of 325 FGE per HalfPACT is justified. In the Case G models, the moderator is composed of 25% polyethylene and 75% water (by volume), and the internal reflector is composed of 25% polyethylene, 74% water, and 1% beryllium (by volume). In Case H, the waste is machine compacted, and a limit of 245 FGE per HalfPACT is justified. In the Case H models, the moderator is composed of 100% polyethylene, and the internal reflector is composed of 99% polyethylene and 1% beryllium (by volume). The dimension and composition of the fissile sphere as a function of the H/Pu ratio for Case G are summarized in Table 3-1. These values are input to KENO and are identical to the input values used in the HalfPACT SAR criticality analysis [1]. KENO uses this input to compute number densities for the various constituents, which are extracted from the output and reported in Table 3-2[2]. For Case H, the

[1] To avoid confusion, the Case designations are selected to be additions to those utilized in the current HalfPACT SAR [1]. Cases G and H are equivalent to Cases A and C, respectively, with modifications specific to the shielded container.

[2] The KENO number densities are slightly different in the current calculation when compared to the existing HalfPACT SAR analysis, although the material input is the same. The likely reason is that SCALE5 was used in the current analysis, while SCALE 4.4a was used in the previous analysis. The differences are negligible.

number densities are computed directly in spreadsheet *INPUT_CASEH.XLS* and provided in Table 3-3[3]. Note that for Case H the number densities are input directly to KENO.

For both Case G and Case H, each shielded container is limited to 200 FGE for shipping purposes. The shielded container limit of 200 FGE is somewhat arbitrary and is selected to be consistent with the drum limit for Cases A and C in the existing HalfPACT SAR.

The utilization of polyethylene as the bounding hydrogenous moderating material is justified by the SAIC-1322-0013 study [3] which concludes that polyethylene is the most reactive moderator that could credibly moderate TRU waste in a pure form. A 25% volumetric packing fraction for polyethylene is used as a conservative value, which is based on physical testing that bounds the packing fraction of polyethylene in manually compacted TRU waste of 13.36% [4].

Materials that can credibly provide better than 25% polyethylene/75% water equivalent reflection are termed "special reflectors" and not authorized for shipment in quantities that exceed 1% by weight except in specific configurations discussed below. Based on the results from SAIC-1322-0013, Be, BeO, C, D_2O, MgO and depleted U (≥0.3% 235U) are the only materials that can provide reflection equivalent to a 2 ft thickness of 25% polyethylene and 75% water mixture under any of the following conditions and are therefore the only materials considered as special reflectors:

- Less than 5/8 inch thick at 100% of theoretical density[4] in the form of large solids
- Less than 11/16 inch thick at 70% of theoretical density in the form of tightly-packed particulate solids
- Less than 20% packing fraction at 24 inches thick in the form of randomly dispersed particulate solids

Lead and carbon steel, which are present in the wall and lid of the shielded containers, do not meet the definition of a special reflector as defined above in the bulleted list. However, these materials are demonstrated in SAIC-1322-0013 to be superior reflectors to a water/poly mix for large thicknesses. Therefore, the shielded containers are modeled explicitly.

The utilization of 1% by volume beryllium in the reflector material filling the inner containment vessel (ICV) bounds the presence of up to 1% by weight quantities of special reflectors that are randomly dispersed in the payload containers based on the volume of the ICV and the maximum allowed weight of the payload containers in the package. SAIC-1322-001 found that beryllium is the bounding special reflector as it provides the best reflection of the system resulting in the highest reactivity.

If the fissile material is bound to the special reflector material, these materials will provide moderation of the fissile material but will not be available to reflect the fissile region. The reference study, SAIC-1322-001, found that adding special reflector materials, with the exception of beryllium, to the fissile region reduced the reactivity of a single 325 FGE 25% polyethylene/75% water reflected sphere. The moderating effect of heavy water was not studied,

---

[3] As the number densities for Case H are computed independently of those utilized in the HalfPACT SAR for Case C, small differences are noted, although these differences are negligible.

[4] Theoretical densities used in the study are 1.85 g/cm^3 for Be, 2.69 g/cm^3 for BeO, 2.1 g/cm^3 for C, 1.1054 g/cm^3 for D_2O, 3.22 g/cm^3 for MgO, and 19.05 g/cm^3 for U.

but the quantity of liquid allowed in the HalfPACT is limited such that heavy water would not be present in greater than 1% by weight quantities. Thus, for both Case G and Case H, if the special reflector, excluding beryllium, is chemically or mechanically bound to the fissile material, the FGE limits apply even in the presence of greater than 1% by weight quantities of the special reflector. Chemically bound means that the special reflector materials are chemically reacted with the fissile material such that the reflector materials and the fissile materials are chemically interacted and are stable. Mechanically bound means the fissile material is mechanically bound to the reflector such that the reflector material will not disengage from the fissile material because it is topographically imbedded, topographically interlocked, or surface contaminated. Each special reflector with regard to its possible presence in TRU waste is discussed below.

Beryllium and Beryllium Oxide – Be and BeO may be present in RH-TRU waste in quantities which exceed 1% by weight. However, for transport of shielded containers in the HalfPACT, Be and BeO are specifically limited to quantities not exceeding 1% by weight.

Carbon – Carbon is present as a constituent in RH-TRU waste but not in forms that can reconfigure as a reflector. For example: (1) Carbon may be present as graphite molds or crucibles. In these forms the carbon will be chemically and irreversibly bound to the plutonium or other fissile material and cannot be separated. (2) Carbon may be present in filter media as spent or activated carbon. The plutonium or other fissile material would then be attached to the carbon filter media and would not be easily separated. (3) Carbon may also be present in alloys, which are by definition chemically and/or mechanically bound. In summary, there is no identified mechanism that could cause the carbon in RH-TRU waste to be separated from the fissile material and to be reconfigured as a reflector.

Deuterium – The presence of liquid waste in the payload containers, except for residual amounts in well-drained containers, is prohibited. As specified by the CH-TRAMPAC, the total volume of residual liquid in a payload container shall be less than 1 percent (volume) of the payload container. This limitation on the authorized contents is such that deuterium will not be present in concentrations of greater than 1% by weight.

Magnesium Oxide – Magnesium oxide crucibles used in high-temperature control applications, such as reduction processes, may be present in solid inorganic waste forms such as glass, metal, and pyrochemical salts. If present, magnesium oxide will be bound to the fissile material and would not be easily separated. Magnesium oxide used for neutralization in solidified material cannot be separated out as it is chemically reacted in the waste generation process. There is no identified mechanism that could cause the magnesium oxide in RH-TRU waste to be reconfigured as a reflector.

Depleted Uranium – Depleted uranium may be present in RH-TRU waste, but it will be chemically and/or mechanically bound to the plutonium or physically inseparable because the densities of uranium and plutonium are similar. Separation by mechanical means or by leaching is extremely difficult and is considered highly unlikely in RH-TRU waste after packaging. Depleted uranium in RH-TRU waste will, therefore, not be separated from the fissile material and reconfigured as a reflector.

Table 3-1 – Case G Fissile Sphere KENO Input [1]

H/Pu	Radius (cm)	Mixture Density (g/cm^3)	Pu-239 (wt. %)	Hydrogen (wt. %)	Carbon (wt. %)	Oxygen (wt. %)
500	11.1934	1.0320	5.361	11.301	19.091	64.247
600	11.8929	1.0232	4.508	11.403	19.263	64.826
700	12.5186	1.0170	3.889	11.477	19.388	65.247
800	13.0873	1.0123	3.419	11.533	19.482	65.565
900	13.6105	1.0087	3.051	11.577	19.557	65.815
1000	14.0962	1.0057	2.754	11.613	19.616	66.017
1100	14.5506	1.0033	2.510	11.642	19.666	66.182
1200	14.9783	1.0013	2.306	11.666	19.707	66.321
1300	15.3829	0.9997	2.132	11.687	19.742	66.439
1400	15.7672	0.9982	1.983	11.705	19.772	66.540
1500	16.1337	0.9970	1.853	11.720	19.798	66.628

Table 3-2 – Case G Fissile Sphere Number Densities

H/Pu	Pu (atoms/b-cm)	H (atoms/b-cm)	O (atoms/b-cm)	C (atoms/b-cm)
500	1.39374E-04	6.96904E-02	2.49625E-02	9.88731E-03
600	1.16199E-04	6.97198E-02	2.49727E-02	9.89132E-03
700	9.96360E-05	6.97471E-02	2.49826E-02	9.89518E-03
800	8.71898E-05	6.97635E-02	2.49883E-02	9.89720E-03
900	7.75286E-05	6.97806E-02	2.49944E-02	9.89997E-03
1000	6.97734E-05	6.97894E-02	2.49966E-02	9.90031E-03
1100	6.34398E-05	6.97967E-02	2.49992E-02	9.90186E-03
1200	5.81676E-05	6.98012E-02	2.50018E-02	9.90272E-03
1300	5.36926E-05	6.98151E-02	2.50063E-02	9.90446E-03
1400	4.98652E-05	6.98177E-02	2.50067E-02	9.90462E-03
1500	4.65402E-05	6.98231E-02	2.50097E-02	9.90572E-03

Table 3-3 – Case H Fissile Sphere Number Densities

H/Pu	Radius (cm)	Pu (atoms/b-cm)	H (atoms/b-cm)	C (atoms/b-cm)
500	9.7672	1.58136E-04	7.90678E-02	3.95339E-02
600	10.3773	1.31849E-04	7.91096E-02	3.95548E-02
700	10.9231	1.13056E-04	7.91394E-02	3.95697E-02
800	11.4192	9.89522E-05	7.91618E-02	3.95809E-02
900	11.8756	8.79769E-05	7.91792E-02	3.95896E-02
1000	12.2994	7.91931E-05	7.91931E-02	3.95966E-02
1100	12.6958	7.20041E-05	7.92045E-02	3.96023E-02
1200	13.0689	6.60117E-05	7.92140E-02	3.96070E-02
1300	13.4218	6.09401E-05	7.92221E-02	3.96110E-02

4.0 General Considerations

4.1 Model Configuration

Criticality calculations for the HalfPACT package are performed using the three-dimensional Monte Carlo computer code KENO-V.a, executed as part of the SCALE-PC v5 system [5] using the CSAS25 driver utility.

The limiting mass of fissile material that may be transported in a single HalfPACT package is shown to provide adequate subcritical margin based on detailed KENO-V.a analyses. These calculations are performed for an optimally moderated single-unit model and an infinite array model of HalfPACT packages under both normal conditions of transport (NCT) and hypothetical accident conditions (HAC).

The basic HalfPACT model is taken directly from the HalfPACT SAR [1]. The only difference is the shielded containers, which have been added to the models to increase reflection of the fissile material.

The packaging model represents the package structural materials, including the stainless steel shells and polyurethane foam. The model consists of nested, right circular cylindrical shells of Type 304 stainless steel (SS304). The right cylindrical geometry of the model conservatively neglects the torispherical shape of the inner and outer containment vessel ends. The model's inner shell represents the combined inner containment vessel (ICV) and outer containment vessel (OCV) components of the actual package. The narrow gap between the ICV and OCV shells is neglected, and the two components are modeled as a single shell of thickness 1/4 + 3/16 = 7/16 inches thick (1.1113 cm) on the side, and 1/4 + 1/4 = 1/2 inches thick (1.200 cm) on the top and bottom. The outside radius of the cylindrical shell representing the combined ICV and OCV components is 38 21/32 inches (98.1869 cm), preserving the outer radius of OCV lid shell. The height of the cylinder, 44 15/16 inches (114.1413 cm), preserves the distance between the upper and lower aluminum honeycomb spacer assemblies within the ICV.

The second, outermost, cylindrical shell is 1/4 inches (0.6350 cm) thick, also of Type 304 stainless steel, and represents the outer containment assembly (OCA) outer shell. The 3/8 inch thick portion of the OCA outer shell is conservatively ignored. Under NCT, the inside radius and inside height of the OCA outer shell are 46 15/16 inches (119.2213 cm) and 70 inches (177.8000 cm), respectively and the outer radius and height are 47 3/16 inches (119.8563 cm) and 70 1/2 inches (179.0700 cm), respectively. Under HAC, the inner radius and height of the OCA outer shell are based on the observed maximum deformation of the OCA following certification testing. At the conclusion of testing, approximately 5 inches of foam remained in the certification test units, except for local areas damaged by puncture bar drops. Hence, the inside of the OCA outer shell is set a distance of 5 inches (12.7000 cm) from the outside of the combined ICV and OCV shell and the 1/4 inches (0.6350 cm) thick OCA shell is modeled. Under both NCT and HAC, no credit is taken for parasitic neutron absorption properties of the polyurethane foam. Instead, the foam is replaced with the 25% polyethylene/ 74% water/1% beryllium mixture as a bounding reflecting material at a volume fraction that maximizes reactivity. Consideration is made for the structural properties of the foam by assuming that the inner cylindrical shell is maintained in its central position subsequent to all HAC tests. The

KENO-V.a representation of single-unit undamaged and damaged HalfPACT packages (without the shielded containers) are illustrated in Figure 4-1 and Figure 4-2, respectively. The following simplifying assumptions tend to decrease the amount of structural material represented in the calculational model and decrease the center-to-center separation between HalfPACT packages in the array analyses and are, therefore, conservative.

- The domed surfaces of the torispherical heads are represented as flat surfaces and are positioned such that the overall height of the HalfPACT packaging is reduced.
- Under HAC, the thickness of the polyurethane foam region is reduced to 5 inches (12.7000 cm) throughout the entire OCA. In all cases, polyurethane foam is ignored and replaced with a polyethylene/water/beryllium mixture that fills the space at a volume fraction that optimizes reactivity

The shielded containers are modeled in a simplified manner based on dimensions obtained from the shielded container SAR drawings [8]. The overall height of a shielded container is 35 3/4 inches (90.805 cm), with an outer diameter of 23 inches (58.42 cm). The lid and bottom plate are 3 inches (7.62 cm) thick and are modeled as carbon steel. The side wall is comprised of lead clad in inner and outer shells of carbon steel. The thickness of the inner steel shell is 0.179 inches (0.4547 cm), the thickness of the outer steel shell is 0.12 inches (0.3048 cm), and the lead thickness is 1 inch (2.54 cm).

Figure Withheld Under 10 CFR 2.390

Figure 4-1 – NCT Single Package Model

Figure Withheld Under 10 CFR 2.390

Figure 4-2 – HAC Single Package Model

4.2 Material Properties

The fissile sphere number densities for Case G and Case H are provided in Table 3-2 and Table 3-3, respectively.

The packaging materials are comprised of stainless steel, carbon steel, and lead. The default material properties within SCALE are utilized for these materials [10].

The reflector represents the regions outside the fissile sphere. The composition of the reflector region inside the ICV varies with the case being modeled. For Case G (manually compacted waste), the ICV reflector is comprised of 25% polyethylene, 1% beryllium, and 74% water (by volume). For Case H (machine compacted waste), the reflector is comprised of 99% polyethylene and 1% beryllium (by volume). The density of each base constituent is 0.9982 g/cm^3 for water, 0.923 g/cm^3 for polyethylene, and 1.85 g/cm^3 for beryllium. For some array models, the density of the reflector regions are varied by using volume fraction multipliers.

The external water reflector is modeled at full density (0.9982 g/cm^3) for the single package models, and at variable density for the array models.

4.3 Computer Codes and Cross-Section Libraries

Calculations for the HalfPACT package are performed with the three-dimensional Monte Carlo transport theory code, KENO-V.a v5.0.2. The SCALE-PC v5, CSAS25 utility is used as a driver for the KENO code. In this role, CSAS25 determines nuclide number densities, performs resonance processing, and automatically prepares the necessary input for the KENO code based on a simplified input description. The 238 energy-group (238GROUPNDF5), cross-section library based on ENDF/B-V cross-section data is used as the nuclear data library for the KENO-V.a code.

The KENO code has been used extensively in the criticality safety industry. KENO-V.a is an extension of earlier versions of the KENO code and includes many versatile geometry capabilities and screen plots to facilitate geometry verification. The KENO-V.a code and the associated 238GROUPNDF5 cross-section data set are validated for proper operation on the PC platform by performing criticality analyses of a number of relevant benchmark criticality experiments. A description of these benchmark calculations, along with justification for the computed bias in the code and library for the relevant region of applicability, is provided in Section 9.0.

Models are run with 1000 neutrons per generation for 850 generations, skipping the first 50. The 1-sigma uncertainty is approximately 0.001 for all cases.

4.4 Demonstration of Maximum Reactivity

Calculations are performed for 325 FGE manually compacted waste (Case G), and 245 FGE machine compacted waste (Case H). The HAC single package and array scenarios for Case G are studied the most extensively. The NCT analyses for both Cases G and H are focused on the most reactive configurations determined for the HAC analyses, as the NCT and HAC configurations are very similar. Also, the Case H analysis is focused on the most reactive configurations determined in the Case G analysis.

For Case G, the moderator is modeled as a composition of 25% polyethylene and 75% water (by volume). As polyethylene is a superior moderator than water, this composition results in higher reactivites than would be achieved by water moderation alone. This volume fraction of polyethylene is conservatively higher than the maximum value achievable for manually compacted (i.e., not machine compacted) waste determined by experiment. The reflector is modeled as a mixture of 25% polyethylene, 74% water, and 1% beryllium (by volume). Beryllium is a superior reflector than either water or polyethylene and the inclusion of beryllium is conservative, although at such a small volume fraction, the beryllium has only a small effect on the system reactivity.

For Case H, the moderator is modeled as 100% polyethylene. As polyethylene is a superior moderator than water, this composition results in higher reactivites than would be achieved by water moderation alone. The reflector is modeled as a mixture of 99% polyethylene and 1% beryllium (by volume). Beryllium is a superior reflector than polyethylene and the inclusion of beryllium is conservative, although at such a small volume fraction, the beryllium has only a small effect on the system reactivity.

In all models, the fissile material is assumed to form a single optimally moderated sphere. In actual practice, such a scenario is not credible because each shielded container is limited to 200 FGE. It is extremely unlikely that fissile material could escape from the shielded containers and reconfigure, or travel from one shielded container to another and reconfigure.

Conservative damage assumptions are utilized in both the NCT and HAC analysis. No credit is taken for the torispherical head of the HalfPACT, which would increase separation distance in the array configuration. All foam and aluminum regions are replaced with reflector at the most reactive density. In the array models, the internal and external reflector densities are varied in order to maximize neutron interaction between packages.

This calculation addresses only <1% by weight special reflectors (beryllium). Special reflectors that are in >1% by weight quantities are not allowed unless chemically or mechanically bound to the fissile material. Lead and steel are not considered "special reflectors," although these materials are more reflective than poly/water at large thicknesses. As the shielded containers have thick steel lids and bottoms, and lead side walls clad in steel, the presence of the shielded containers slightly increases the reactivity. Various configurations of fissile sphere and shielded container are utilized. The most reactive configuration (for both single package and array) always occurs when the fissile sphere is in a corner of a shielded container, which maximizes reflection.

The maximum reactivity of the single package and infinite array models are nearly identical for most cases. This indicates that neutron communication between packages is rather limited, and the fissile material is largely isolated. Note that differences of approximately 0.002 between the various model results is often simply due to statistical fluctuation. The most reactive HAC single package model (Model F5, k_s = 0.9372) is statistically equivalent to the most reactive HAC array model (Model T5, k_s = 0.9368), although the arrangements within the package are quite different. Case G results in higher reactivities than Case H, although Case H has a much lower fissile mass. All results are below the USL of 0.9377.

5.0 Single Package Evaluation

5.1 Single Package Configuration

5.1.1 NCT Single Package Configuration

Only a limited number of NCT array cases are developed, for the following reasons: (1) the NCT and HAC array models are nearly identical, and (2) under NCT, reconfiguration of the fissile material from three shielded containers into a single sphere is not credible, as each shielded container is limited to a maximum of 200 FGE. Therefore, conclusions drawn from the HAC models are applicable to the NCT models. A number of HAC single package configurations are investigated in Section 5.1.2, and the most reactive HAC single package configurations (i.e, Configuration F for Case G, and Configuration J for Case H) are modified to increase the OCA dimensions to be consistent with the NCT geometry described in Section 4.1.

Two configurations[5] are examined, corresponding to Case G (manually compacted waste) and Case H (machine compacted waste), as shown in Figure 5-1:

1. Configuration A: Case G, three shielded containers are modeled in a row, axially centered within the ICV, fissile sphere in upper right hand corner of center shielded container. Externally reflected with 30 cm of water.
2. Configuration B: Case H, three shielded containers are modeled in a row, axially centered within the ICV, fissile sphere in upper right hand corner of center shielded container. Externally reflected with 30 cm of water.

Modeling the fissile sphere in the upper right corner of the shielded container maximizes reflection by the carbon steel lid and carbon steel/lead side wall. Justification that this configuration is the most reactive is provided in Section 5.1.2.

Results for Case G and Case H are provided in Table 5-1 and Table 5-2, respectively. All results are below the USL of 0.9377.

5.1.2 HAC Single Package Configuration

Six different configurations are examined in the HAC single package models for Case G (manually compacted waste), as shown in Figure 5-2. All models are externally reflected with 30 cm of water. These configurations are as follows:

1. Configuration C: Shielded containers not modeled, fissile sphere modeled in center of package.
2. Configuration D: Fissile sphere in center of package, surrounded by three shielded containers.

[5] In this analysis, each specific calculation series is given a unique letter configuration designation for identification purposes. This allows easy cross referencing between text, tables, and figures. The assignment of configuration letter is arbitrary and not necessarily sequential. "Configuration" should not be confused with "Case." Only two Cases are examined: Case G (manually compacted waste) and Case H (machine compacted waste).

3. Configuration E: Three shielded containers in row, sphere in center of middle shielded container.
4. Configuration F: Fissile sphere in center shielded container, shifted to the upper right corner.
5. Configuration G: Fissile sphere in center shielded container, shifted to the side.
6. Configuration H: Shielded containers shifted to the top of the cavity, fissile sphere in center shielded container, shifted to the upper right corner.

Results for Case G are provided in Table 5-3. Due to statistical fluctuation, the peak reactivities for each configuration occurs at either H/Pu = 800 or 900. The presence of the shielded containers has a statistically insignificant effect on the reactivity if the fissile sphere is away from the wall of the shielded container. The most reactive condition (Model F5) occurs when the fissile sphere is in the upper right hand corner of the center shielded container. This configuration increases reactivity due to the increased reflection of both the steel lid and the steel/lead side wall. The multiplication factor is 0.9372 for the most reactive model, which is below the USL of 0.9377.

For Case H (machine compacted waste), only the two configurations are examined, as the response of the system will trend in the same fashion as Case G.

1. Configuration I: Three shielded containers in row, sphere in center of middle shielded container (compare to Configuration E).
2. Configuration J: Fissile sphere in center shielded container, shifted to the side (compare to Configuration F).

The most reactive configuration for Case H is the same for Case G, namely, with the fissile sphere in the upper right corner of the center shielded container. The multiplication factor is 0.9298 for the most reactive model (Model J6), which is below the USL of 0.9377.

5.2 Single Package Results

Following are the tabulated results for the single package cases. The most reactive model in each configuration is listed in boldface.

Table 5-1 – NCT Single Package Results, Case G, 325 FGE

ID	Filename	H/Pu	Configuration A	k_{eff}	σ	k_s
A1	ns_insc_up	500	Moderator = 25% poly/75% water Reflector in ICV and OCA = 25% poly/74% water/1% beryllium Fissile sphere located in upper right corner of center shielded container (see Figure 5-1)	0.9022	0.0010	0.9042
A2	ns_insc_up	600		0.9178	0.0010	0.9198
A3	ns_insc_up	700		0.9267	0.0010	0.9287
A4	ns_insc_up	800		0.9330	0.0011	0.9352
A5	ns_insc_up	900		0.9324	0.0010	0.9344
A6	**ns_insc_up**	**1,000**		**0.9334**	**0.0010**	**0.9354**
A7	ns_insc_up	1,100		0.9280	0.0010	0.9300
A8	ns_insc_up	1,200		0.9231	0.0010	0.9251
A9	ns_insc_up	1,300		0.9186	0.0010	0.9206

Table 5-2 – NCT Single Package Results, Case H, 245 FGE

ID	Filename	H/Pu	Configuration B	k_{eff}	σ	k_s
B1	ns245_insc_up	500	Moderator = 100% poly Reflector in ICV = 99% poly/1% beryllium Reflector in OCA = 25% poly/74% water/1% beryllium Fissile sphere located in upper right corner of center shielded container (see Figure 5-1)	0.8942	0.0010	0.8961
B2	ns245_insc_up	600		0.9124	0.0010	0.9144
B3	ns245_insc_up	700		0.9225	0.0010	0.9245
B4	ns245_insc_up	800		0.9256	0.0010	0.9275
B5	**ns245_insc_up**	**900**		**0.9282**	**0.0010**	**0.9302**
B6	ns245_insc_up	1,000		0.9271	0.0010	0.9290
B7	ns245_insc_up	1,100		0.9223	0.0010	0.9243
B8	ns245_insc_up	1,200		0.9192	0.0010	0.9212
B9	ns245_insc_up	1,300		0.9145	0.0009	0.9163

Table 5-3 – HAC Single Package Results, Case G, 325 FGE

ID	Filename	H/Pu	Configuration C	k_{eff}	σ	k_s
C1	hs_nosc	500	Moderator = 25% poly/75% water Reflector in ICV and OCA = 25% poly/74% water/1% beryllium Fissile sphere located in center of package, no shielded containers (see Figure 5-2).	0.8994	0.0011	0.9016
C2	hs_nosc	600		0.9155	0.0010	0.9175
C3	hs_nosc	700		0.9264	0.0010	0.9283
C4	hs_nosc	800		0.9296	0.0010	0.9316
C5	**hs_nosc**	**900**		**0.9303**	**0.0010**	**0.9323**
C6	hs_nosc	1000		0.9277	0.0010	0.9297
C7	hs_nosc	1100		0.9265	0.0009	0.9283
C8	hs_nosc	1200		0.9228	0.0010	0.9248
C9	hs_nosc	1300		0.9166	0.0009	0.9185
ID	**Filename**	**H/Pu**	**Configuration D**	**k_{eff}**	**σ**	**k_s**
D1	hs_center	500	Moderator = 25% poly/75% water Reflector in ICV and OCA = 25% poly/74% water/1% beryllium Fissile sphere located in center of package, surrounded by three shielded containers (see Figure 5-2).	0.8970	0.0010	0.8990
D2	hs_center	600		0.9151	0.0010	0.9171
D3	hs_center	700		0.9259	0.0010	0.9279
D4	hs_center	800		0.9289	0.0010	0.9309
D5	**hs_center**	**900**		**0.9316**	**0.0010**	**0.9336**
D6	hs_center	1000		0.9291	0.0010	0.9311
D7	hs_center	1100		0.9259	0.0009	0.9276
D8	hs_center	1200		0.9243	0.0009	0.9262
D9	hs_center	1300		0.9149	0.0009	0.9167
ID	**Filename**	**H/Pu**	**Configuration E**	**k_{eff}**	**σ**	**k_s**
E1	hs_insc	500	Moderator = 25% poly/75% water Reflector in ICV and OCA = 25% poly/74% water/1% beryllium Shielded containers in a row, fissile sphere located in center of middle shielded container (see Figure 5-2).	0.8988	0.0010	0.9008
E2	hs_insc	600		0.9160	0.0011	0.9182
E3	hs_insc	700		0.9249	0.0010	0.9269
E4	hs_insc	800		0.9296	0.0010	0.9316
E5	**hs_insc**	**900**		**0.9310**	**0.0010**	**0.9330**
E6	hs_insc	1000		0.9307	0.0010	0.9326
E7	hs_insc	1100		0.9258	0.0010	0.9278
E8	hs_insc	1200		0.9209	0.0009	0.9227
E9	hs_insc	1300		0.9161	0.0009	0.9178

(continued)

Table 5-3 – HAC Single Package Results, Case G, 325 FGE (concluded)

ID	Filename	H/Pu	Configuration F	k_{eff}	σ	k_s
F1	hs_insc_up	500	Moderator = 25% poly/75% water Reflector in ICV and OCA = 25% poly/74% water/1% beryllium Fissile sphere located in upper right corner of center shielded container (see Figure 5-2).	0.9023	0.0012	0.9047
F2	hs_insc_up	600		0.9180	0.0010	0.9200
F3	hs_insc_up	700		0.9262	0.0010	0.9282
F4	hs_insc_up	800		0.9319	0.0010	0.9338
F5	**hs_insc_up**	**900**		**0.9350**	**0.0011**	**0.9372**
F6	hs_insc_up	1000		0.9340	0.0010	0.9360
F7	hs_insc_up	1100		0.9294	0.0010	0.9314
F8	hs_insc_up	1200		0.9236	0.0010	0.9256
F9	hs_insc_up	1300		0.9180	0.0010	0.9200
ID	**Filename**	**H/Pu**	**Configuration G**	**k_{eff}**	**σ**	**k_s**
G1	hs_insc_side	500	Moderator = 25% poly/75% water Reflector in ICV and OCA = 25% poly/74% water/1% beryllium Fissile sphere located in center shielded container, off to side (see Figure 5-2).	0.8997	0.0010	0.9017
G2	hs_insc_side	600		0.9132	0.0010	0.9152
G3	hs_insc_side	700		0.9244	0.0010	0.9264
G4	**hs_insc_side**	**800**		**0.9304**	**0.0010**	**0.9324**
G5	hs_insc_side	900		0.9301	0.0011	0.9323
G6	hs_insc_side	1000		0.9295	0.0010	0.9315
G7	hs_insc_side	1100		0.9277	0.0010	0.9297
G8	hs_insc_side	1200		0.9226	0.0010	0.9246
G9	hs_insc_side	1300		0.9165	0.0010	0.9184
ID	**Filename**	**H/Pu**	**Configuration H**	**k_{eff}**	**σ**	**k_s**
H1	hs_insc_up2	500	Moderator = 25% poly/75% water Reflector in ICV and OCA = 25% poly/74% water/1% beryllium Shielded containers shifted up, fissile sphere in upper right corner of center shielded container (see Figure 5-2).	0.9035	0.0010	0.9054
H2	hs_insc_up2	600		0.9204	0.0010	0.9224
H3	hs_insc_up2	700		0.9311	0.0010	0.9331
H4	**hs_insc_up2**	**800**		**0.9341**	**0.0010**	**0.9360**
H5	hs_insc_up2	900		0.9319	0.0011	0.9341
H6	hs_insc_up2	1000		0.9339	0.0010	0.9358
H7	hs_insc_up2	1100		0.9290	0.0009	0.9308
H8	hs_insc_up2	1200		0.9246	0.0010	0.9266
H9	hs_insc_up2	1300		0.9177	0.0009	0.9196

Table 5-4 – HAC Single Package Results, Case H, 245 FGE

ID	Filename	H/Pu	Configuration I	k_{eff}	σ	k_s
I1	hs245_insc	500	Moderator = 100% poly Reflector in ICV = 99% poly/1% beryllium Reflector in OCA = 25% poly/74% water/1% beryllium Fissile sphere located in center of package, three shielded containers in row.	0.8914	0.0010	0.8934
I2	hs245_insc	600		0.9112	0.0010	0.9132
I3	hs245_insc	700		0.9188	0.0010	0.9208
I4	hs245_insc	800		0.9240	0.0010	0.9260
I5	**hs245_insc**	**900**		**0.9267**	**0.0011**	**0.9289**
I6	hs245_insc	1000		0.9248	0.0010	0.9267
I7	hs245_insc	1100		0.9236	0.0010	0.9256
I8	hs245_insc	1200		0.9176	0.0010	0.9196
I9	hs245_insc	1300		0.9106	0.0010	0.9126
ID	**Filename**	**H/Pu**	**Configuration J**	**k_{eff}**	**σ**	**k_s**
J1	hs245_insc_up	500	Moderator = 100% poly Reflector in ICV = 99% poly/1% beryllium Reflector in OCA = 25% poly/74% water/1% beryllium Fissile sphere located in upper right corner of center shielded container.	0.8927	0.0013	0.8953
J2	hs245_insc_up	600		0.9115	0.0010	0.9135
J3	hs245_insc_up	700		0.9197	0.0010	0.9217
J4	hs245_insc_up	800		0.9251	0.0010	0.9271
J5	hs245_insc_up	900		0.9275	0.0011	0.9297
J6	**hs245_insc_up**	**1000**		**0.9278**	**0.0010**	**0.9298**
J7	hs245_insc_up	1100		0.9240	0.0010	0.9260
J8	hs245_insc_up	1200		0.9205	0.0010	0.9224
J9	hs245_insc_up	1300		0.9144	0.0009	0.9163

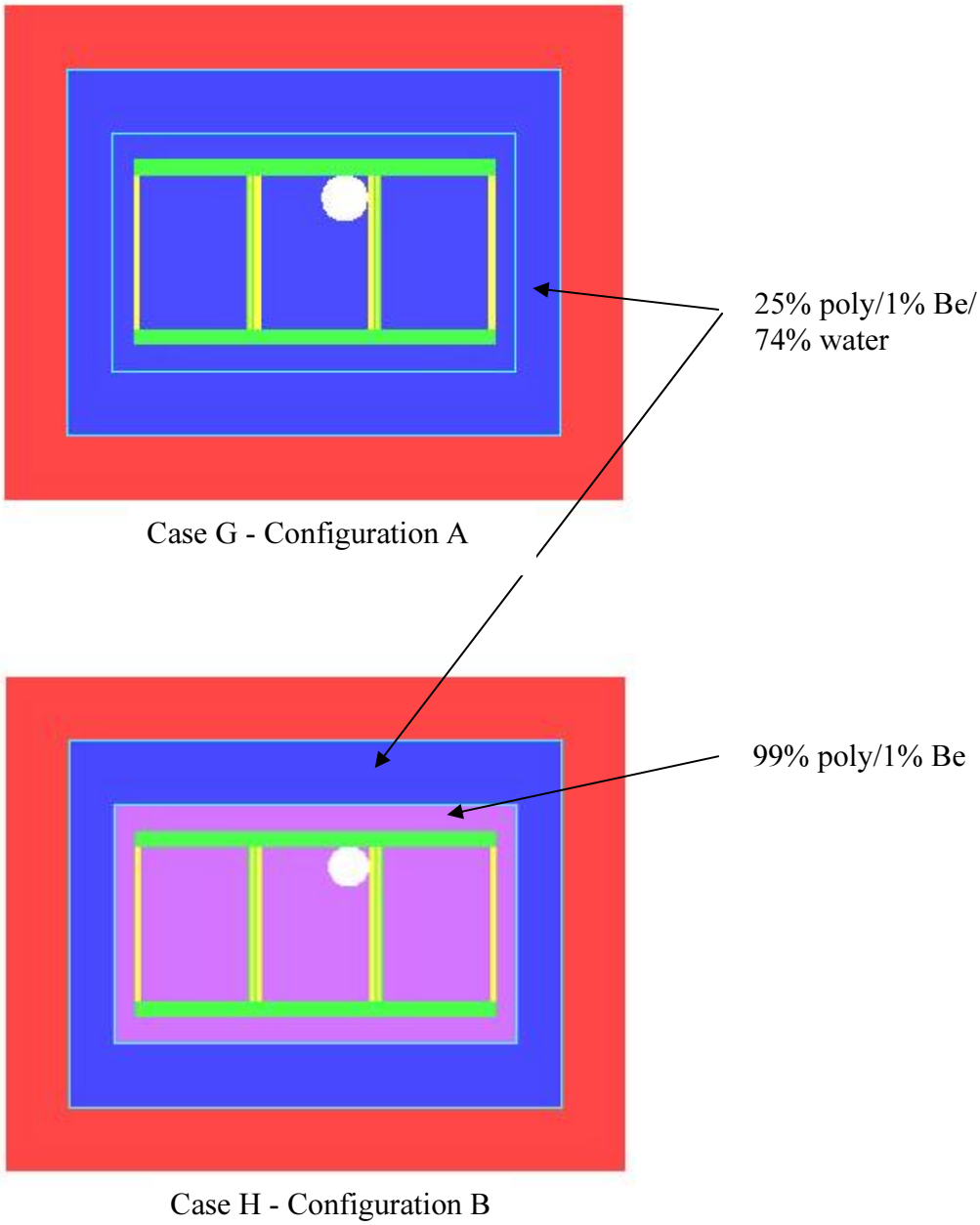

Figure 5-1 – NCT Single Package Geometry

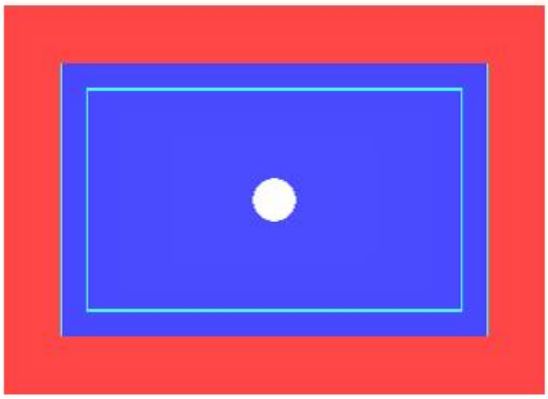

Configuration C

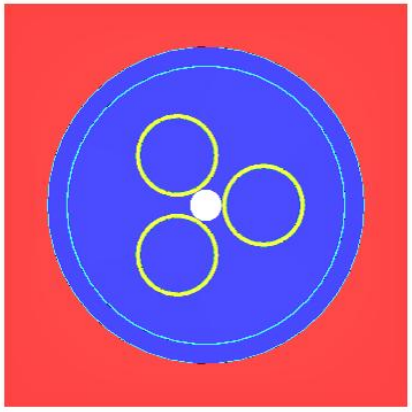

Configuration D

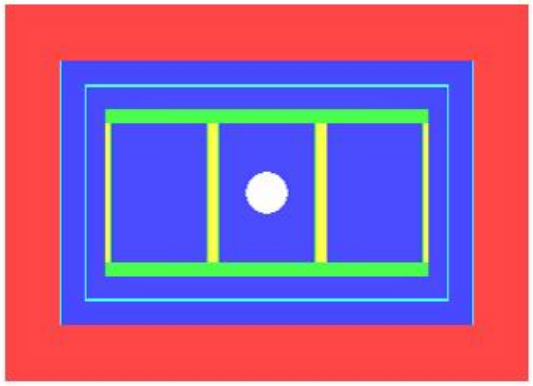

Configuration E

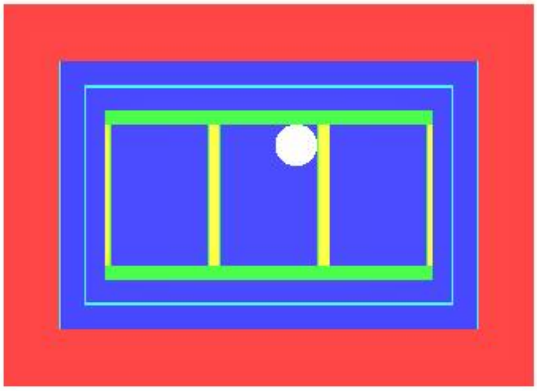

Configuration F

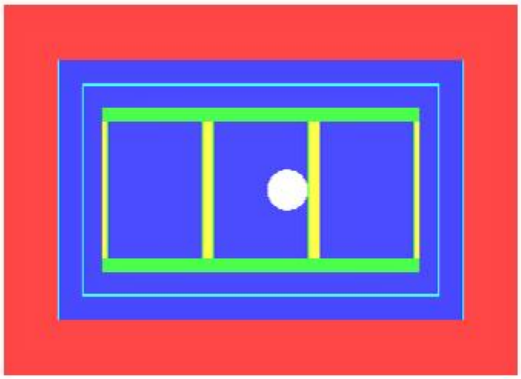

Configuration G

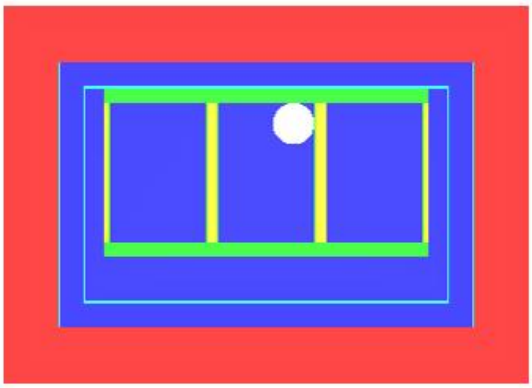

Configuration H

Figure 5-2 – HAC Single Package Geometry, Case G

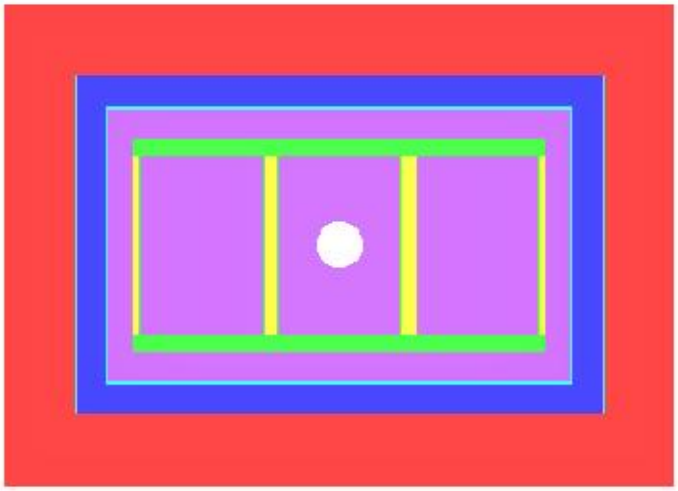

Configuration I

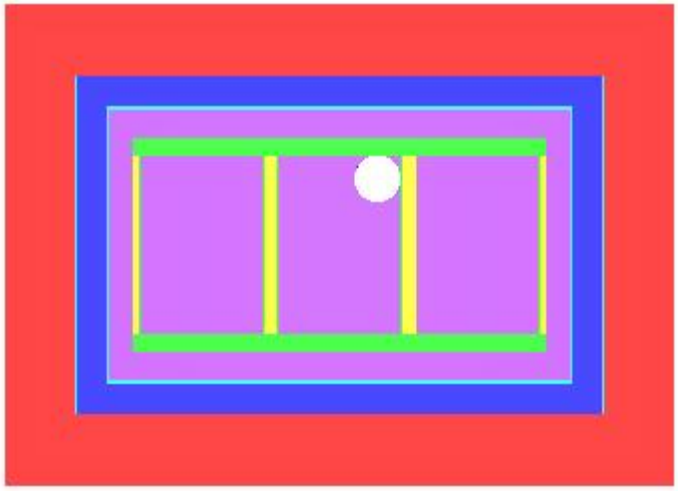

Configuration J

Figure 5-3 – HAC Single Package Geometry, Case H

6.0 Evaluation of Package Arrays under Normal Conditions of Transport

6.1 NCT Array Configuration

Only a limited number of NCT array cases are developed, for the following reasons: (1) the NCT and HAC array models are nearly identical, and (2) under NCT, reconfiguration of the fissile material from three shielded containers into a single sphere is not credible, as each shielded container is limited to a maximum of 200 FGE. A number of HAC array configurations are investigated (see Section 7.0), and this analysis is not repeated for the NCT array cases. All of the NCT array configurations are shown in Figure 6-1.

For Case G (manually compacted waste), two configurations are examined:

1. Configuration K: NCT single package model (Configuration A), reflected on all 6 sides in an infinite square array.
2. Configuration L: Most reactive HAC array configuration (Configuration T) modified for NCT geometry, reflected on all 6 sides in an infinite square array. A single shielded container is pushed up and to the side, the other shielded containers are not modeled. The fissile sphere is located in the upper right corner of the shielded container. With the reflective boundary condition, this effectively places four fissile spheres in close proximity. The ICV reflector is modeled as 25% poly/74% water/1% Be at full density, while the OCV and external region is modeled as void.

For Case H (machine compacted waste), three configurations are examined:

1. Configuration M: Same as Configuration K, but with Case H moderator/reflector assumptions.
2. Configuration N: Same as Configuration L, but with Case H moderator/reflector assumptions.
3. Configuration NN: Same as Configuration N, but with void inside the ICV and reflector inside the shielded container. Note that the moderator/reflector that fills the shielded container is present under normal conditions, so it is reasonable to consider this configuration for Case H. This configuration is not credible for Case G because the reactivity will drop substantially in the absence of water inleakege for manually compacted waste.

Results for Case G and Case H are provided in Table 6-1 and Table 6-2, respectively. For Case G, the maximum reactivites of the two configurations examined are statistically equivalent. For Case H, Configuration M and Configuration NN are statistically equivalent, although the geometry of these two models are quite different. All results are below the USL of 0.9377.

6.2 NCT Array Results

The results for the NCT array cases are provided in the following tables. The most reactive model in each configuration is listed in boldface.

Table 6-1 – NCT Array Results, Case G, 325 FGE

ID	Filename	H/Pu	Configuration K	k_{eff}	σ	k_s
K1	na_insc_up	500	Moderator = 25% poly/75% water Reflector in ICV and OCA = 25% poly/74% water/1% beryllium External reflector = 100% water Fissile sphere located in upper right corner of center shielded container, infinitely reflected (see Figure 6-1).	0.9019	0.0010	0.9039
K2	na_insc_up	600		0.9194	0.0010	0.9214
K3	na_insc_up	700		0.9274	0.0011	0.9296
K4	na_insc_up	800		0.9314	0.0010	0.9334
K5	na_insc_up	900		0.9326	0.0010	0.9346
K6	**na_insc_up**	**1000**		**0.9332**	**0.0010**	**0.9352**
K7	na_insc_up	1100		0.9287	0.0010	0.9307
K8	na_insc_up	1200		0.9234	0.0010	0.9254
K9	na_insc_up	1300		0.9184	0.0010	0.9203
ID	**Filename**	**H/Pu**	**Configuration L**	**k_{eff}**	**σ**	**k_s**
L1	na_insc_up2x	500	Moderator = 25% poly/75% water Reflector in ICV = 25% poly/74% water/1% beryllium Reflector in OCA and external = void Shielded container located at side and top of cavity, fissile sphere located at side and top of shielded container, infinitely reflected (see Figure 6-1).	0.9011	0.0010	0.9031
L2	na_insc_up2x	600		0.9157	0.0010	0.9177
L3	na_insc_up2x	700		0.9273	0.0010	0.9293
L4	na_insc_up2x	800		0.9303	0.0010	0.9323
L5	**na_insc_up2x**	**900**		**0.9336**	**0.0010**	**0.9355**
L6	na_insc_up2x	1000		0.9306	0.0009	0.9324
L7	na_insc_up2x	1100		0.9281	0.0009	0.9299
L8	na_insc_up2x	1200		0.9246	0.0009	0.9265
L9	na_insc_up2x	1300		0.9194	0.0010	0.9213

Table 6-2 – NCT Array Results, Case H, 245 FGE

ID	Filename	H/Pu	Configuration M	k_{eff}	σ	k_s
M1	na245_insc_up	500	Moderator = 100% poly Reflector in ICV = 99% poly/1% beryllium Reflector in OCA = 25% poly/74% water/1% beryllium External reflector = 100% water Fissile sphere located in upper right corner of center shielded container, infinitely reflected (see Figure 6-1).	0.8951	0.0011	0.8973
M2	na245_insc_up	600		0.9115	0.0010	0.9135
M3	na245_insc_up	700		0.9200	0.0009	0.9218
M4	na245_insc_up	800		0.9253	0.0010	0.9273
M5	**na245_insc_up**	**900**		**0.9286**	**0.0010**	**0.9306**
M6	na245_insc_up	1000		0.9279	0.0010	0.9299
M7	na245_insc_up	1100		0.9244	0.0010	0.9264
M8	na245_insc_up	1200		0.9191	0.0010	0.9211
M9	na245_insc_up	1300		0.9116	0.0010	0.9136
ID	**Filename**	**H/Pu**	**Configuration N**	**k_{eff}**	**σ**	**k_s**
N1	na245_insc_up2x	500	Moderator = 100% poly Reflector in ICV = 99% poly/1% beryllium Reflector in OCA and external = void Shielded container located at side and top of cavity, fissile sphere located at side and top of shielded container, infinitely reflected (see Figure 6-1).	0.8926	0.0010	0.8946
N2	na245_insc_up2x	600		0.9115	0.0010	0.9135
N3	na245_insc_up2x	700		0.9198	0.0011	0.9220
N4	na245_insc_up2x	800		0.9251	0.0010	0.9271
N5	**na245_insc_up2x**	**900**		**0.9259**	**0.0012**	**0.9283**
N6	na245_insc_up2x	1000		0.9243	0.0010	0.9263
N7	na245_insc_up2x	1100		0.9233	0.0010	0.9252
N8	na245_insc_up2x	1200		0.9178	0.0009	0.9196
N9	na245_insc_up2x	1300		0.9131	0.0010	0.9150
ID	**Filename**	**H/Pu**	**Configuration NN**	**k_{eff}**	**σ**	**k_s**
NN1	na245_insc_up2xp	500	Moderator = 100% poly Reflector in SC = 99% poly/1% beryllium Reflector in ICV, OCA and external = void Shielded container located at side and top of cavity, fissile sphere located at side and top of shielded container, infinitely reflected (see Figure 6-1).	0.8938	0.0011	0.8960
NN2	na245_insc_up2xp	600		0.9111	0.0011	0.9133
NN3	na245_insc_up2xp	700		0.9194	0.0010	0.9214
NN4	na245_insc_up2xp	800		0.9273	0.0011	0.9295
NN5	**na245_insc_up2xp**	**900**		**0.9293**	**0.0010**	**0.9313**
NN6	na245_insc_up2xp	1000		0.9270	0.0009	0.9289
NN7	na245_insc_up2xp	1100		0.9245	0.0009	0.9262
NN8	na245_insc_up2xp	1200		0.9216	0.0009	0.9234
NN9	na245_insc_up2xp	1300		0.9155	0.0009	0.9174

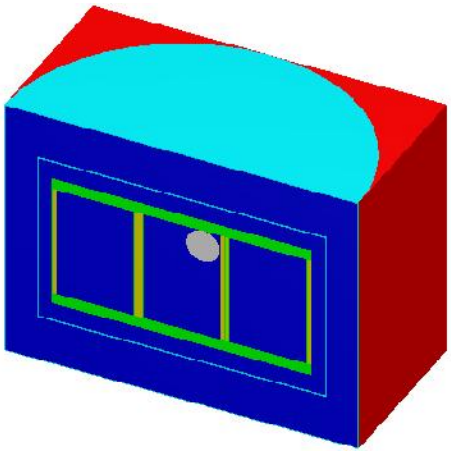

Case G - Configuration K

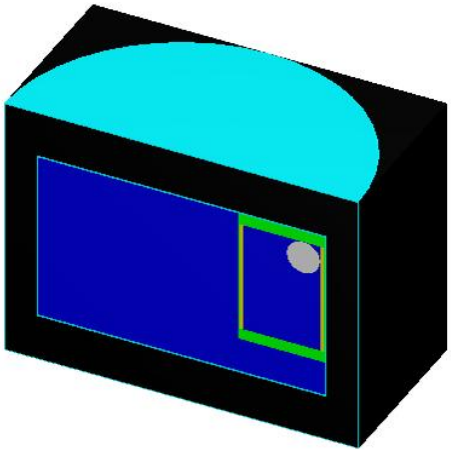

Case G - Configuration L

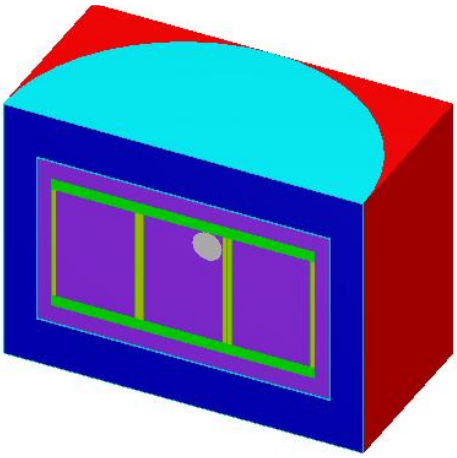

Case H - Configuration M

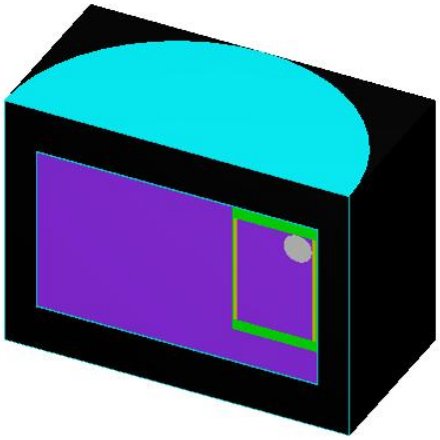

Case H - Configuration N

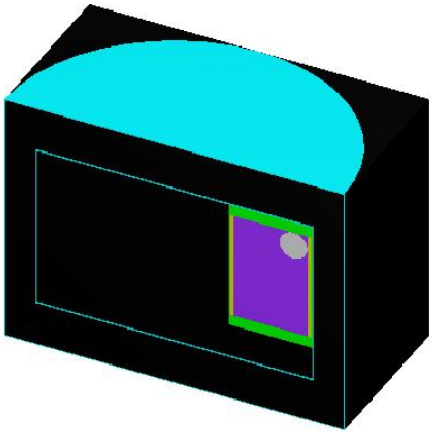

Case H - Configuration NN

Figure 6-1 – NCT Array Geometry

7.0 Package Arrays under Hypothetical Accident Conditions

7.1 HAC Array Configuration

A large number of HAC array configurations are examined. A number of competing factors must be considered in the array calculations, such as:

- Fissile sphere placement: Placing the fissile sphere near a package corner may increase neutron communication between packages (positive reactivity effect), but may reduce reflection (negative reactivity effect).
- Presence of shielded container: Because of the shielded container wall thickness, if the fissile sphere is in the package corner, the distance to a fissile sphere in an adjacent package is minimized if the shielded containers are not modeled. Modeling fissile sphere inside a shielded container will increase the separation distance (negative reactivity effect), but will also increase neutron reflection (positive reactivity effect).
- Reflector density: A lower reflector density will reduce neutron reflection (negative reactivity effect), but may increase neutron communication between adjacent packages (positive reactivity effect).

All models are infinitely reflected in a square lattice. The specific configurations examined for Case G (manually compacted waste) are listed below. A sketch of the geometry of each configuration is provided in Figure 7-1.

1. Configuration O: No shielded containers modeled, fissile sphere in center of package, fully reflected in each region.
2. Configuration P: Three shielded containers in a row, fissile sphere in center of middle shielded container, fully reflected in each region.
3. Configuration Q: Three shielded containers in a row, fissile sphere in middle container, shifted to upper right corner, fully reflected in each region.
4. Configuration R: Three shielded containers in a row shifted up, fissile sphere in middle container, shifted to upper right corner, fully reflected in each region. With the reflective boundary condition, this essentially places two fissile spheres in close proximity.
5. Configuration S: One shielded container shifted up and to the side, fissile sphere in shielded container, shifted to the upper right corner, fully reflected in each region. With the reflective boundary condition, this essentially places four fissile spheres in close proximity.
6. Configuration T: Same as Configuration S, except the OCA reflector and external reflector have been replaced with void. This will reduce reflection but increase package to package neutron transmission.
7. Configuration U: Same as Configuration T, except the shielded container is moved to a “corner” position so that essentially eight fissile spheres are in close proximity.

8. Configuration V: Same as Configuration T, except the shielded container is not modeled. This allows the fissile sphere to move closer to an adjacent package.
9. Configuration W: Same as Configuration U, except that the shielded container is not modeled. This allows the fissile sphere to move closer to an adjacent package.
10. Configuration X: Same as Configuration T, except the fissile sphere is now outside of the shielded container. This minimizes the distance between adjacent fissile spheres, and also will increase reflection when compared to the configuration without a shielded container.
11. Configuration Y: Same as Configuration T, except all hydrogenous reflecting material is modeled as void.
12. Configuration Z: Same as Configuration S, except the density of all reflecting material (ICV, OCA, external) is varied with a multiplier ranging from 1 to 0 while the H/Pu = 900. Reducing the reflector density will reduce reflection but increase transmission.
13. Configuration AA: Same as Configuration S, except the density of all reflecting material (ICV, OCA, external) is varied with a multiplier ranging from 1 to 0 while the H/Pu = 1000. Reducing the reflector density will reduce reflection but increase transmission.

Results for Case G are provided in Table 7-1. The individual configurations are discussed in the following paragraphs.

Configuration O represents the basic fully-reflected model with the fissile sphere in the center and no shielded containers. The reactivity is statistically equivalent to Configuration P, for which the three shielded containers are modeled but the fissile sphere is not contacting any of the shielded container walls. In Configuration Q, the fissile sphere is shifted upward to the upper right corner of the center shielded container. The maximum reactivity of Configuration Q is slightly higher than either Configurations O or P, indicating increased reflection from the carbon steel and lead has a positive reactivity effect. This result is consistent with the single package HAC results, which also showed a positive reactivity effect from placing the fissile sphere in this location. Note that the shielded containers have a negligible effect on the reactivity if the fissile sphere is not contacting a shielded container wall.

In Configuration R, the shielded containers are shifted upward to the maximum possible extent. This slightly increases the steel reflection, and also places the fissile sphere close to the reflective boundary. However, the reactivity is statistically equivalent to the Configuration Q. In Configuration S, the shielded container with the fissile sphere is shifted to the far right of the ICV. As it has been established that shielded containers affect the reactivity only when they contact the fissile sphere, for convenience, the other two shielded containers are not modeled. With the reflective boundary conditions, this arrangement results in a close-packed cluster of four fissile spheres. However, the reactivity is statistically equivalent to both Configurations Q and R, indicating that package to package interactions are negligible if full-density moderator is included in the ICV, OCA, and external reflector.

To maximize package to package interactions, in Configuration T both the OCA and external reflector regions are modeled as void. This arrangement reduces reflection, although the net effect is a slight reactivity gain due to increased package interactions (note the effect is small and

may simply be statistical fluctuation). Model T5, with k_s = 0.9368, results in the highest reactivity of all the Case G HAC array cases.

A number of further variations to the most reactive configuration are developed, but are shown to be less reactive than Configuration T. In Configuration U, the shielded container is moved to the "corner" of the ICV. With the reflective boundary conditions, this arrangement results in eight fissile spheres in the closest possible cluster. The reactivity is slightly less than Configuration T. In Configuration V, Configuration T is modified to remove the shielded container entirely. This allows the fissile spheres from adjacent packages to pack into a tighter cluster, as the shielded container adds separation distance. The reactivity drops noticeably, indicating that reflection is more important to the reactivity than package to package transmission. Configuration W is the same as Configuration U except the shielded container has been removed. The reactivity of Configuration W is lower than either Configuration T or U.

In Configuration X, the fissile sphere is modeled outside the shielded container, but with the fissile sphere at the ICV side and the shielded container reflecting the sphere from the left. This configuration is more reactive than the configuration with no shielded container (Configuration V), but less reactive than the configuration when the fissile sphere is inside the shielded container (Configuration T).

In the previous configurations, the ICV is filled with full-density reflector. Such a configuration limits package to package neutron interaction. In the remaining configurations, the models are adjusted to maximize interactions between packages. In Configuration Y, Configuration T is modified so that all model regions are filled with void. The reactivity is significantly less than when the ICV is filled with reflector. In Configuration Z, the H/Pu is fixed at 900, and the density multiplier for each of the three reflector regions (ICV, OCA, and external) is varied from 1.0 to 0. Configuration AA is the same as Configuration Z except that the H/Pu is fixed at 1100. Both Configurations Z and AA are less reactive than Configuration T, in which the OCA and external reflector are modeled as void. Therefore, full-density reflection in the ICV is the most reactive configuration.

In summary, for Case G, Configuration T is the most reactive configuration analyzed, with k_s = 0.9368. This value is less than the USL of 0.9377. Note that the most reactive array reactivity is slightly less than the maximum single package reactivity, which indicates array interactions are minimal and differences may be due to statistical fluctuation. Also, while it is not practical to examine every possible configuration of shielded container, fissile sphere, and reflector density (which could vary from region to region), the small variation in reactivity with the many different configurations examined indicates that the reactivity for the HAC array is similar to the reactivity of the HAC single package.

For Case H (machine compacted waste), the system response will be the same as for Case G. Therefore, it is not necessary to repeat all of the calculations described above. Rather, only four Case H configurations are developed and are listed below. A sketch of the geometry of each configuration is provided in Figure 7-2.

1. Configuration BB: Three shielded containers in a row, fissile sphere in middle container, shifted to upper right corner, fully reflected in each region (same as Configuration Q but with Case H moderator/reflector assumptions).

2. Configuration CC: One shielded container shifted up and to the side, fissile sphere in shielded container, shifted to the upper right corner, OCA and external reflector as void, fully reflected ICV (same as Configuration T but with Case H moderator/reflector assumptions).
3. Configuration DD: Same as Configuration CC, except the ICV is modeled as void with full-density reflector in the shielded container. Note that the 100% poly moderator/reflector that fills the shielded container is present under normal conditions, so it is reasonable to consider this configuration for Case H. This configuration is not credible for Case G because the reactivity will drop substantially in the absence of water inleakege for manually compacted waste.
4. Configuration EE: Same as Configuration DD, except the volume fraction multiplier for both the OCA and external reflector is allowed to vary.

Configuration CC (Model CC5) is the most reactive, with k_s = 0.9340, although Configurations CC and DD are statistically equivalent. This value is less than the USL of 0.9377.

7.2 HAC Array Results

The results for the HAC array cases are provided in the following tables. The most reactive model in each configuration is listed in boldface.

Table 7-1 – HAC Array Results, Case G, 325 FGE

ID	Filename	H/Pu	Configuration O	k_{eff}	σ	k_s
O1	ha_nosc	500	Moderator = 25% poly/75% water Reflector in ICV and OCA = 25% poly/74% water/1% beryllium External reflector = 100% water Fissile sphere located in center of package, no shielded containers (see Figure 7-1).	0.9013	0.0010	0.9033
O2	ha_nosc	600		0.9152	0.0010	0.9172
O3	ha_nosc	700		0.9253	0.0010	0.9273
O4	**ha_nosc**	**800**		**0.9302**	**0.0010**	**0.9322**
O5	ha_nosc	900		0.9299	0.0010	0.9319
O6	ha_nosc	1000		0.9284	0.0009	0.9302
O7	ha_nosc	1100		0.9252	0.0010	0.9272
O8	ha_nosc	1200		0.9214	0.0010	0.9234
O9	ha_nosc	1300		0.9154	0.0010	0.9174
ID	**Filename**	**H/Pu**	**Configuration P**	**k_{eff}**	**σ**	**k_s**
P1	ha_insc	500	Moderator = 25% poly/75% water Reflector in ICV and OCA = 25% poly/74% water/1% beryllium External reflector = 100% water Three shielded containers in a row, fissile sphere located in center of middle shielded container (see Figure 7-1).	0.9000	0.0012	0.9024
P2	ha_insc	600		0.9152	0.0010	0.9172
P3	ha_insc	700		0.9237	0.0010	0.9257
P4	ha_insc	800		0.9279	0.0010	0.9299
P5	**ha_insc**	**900**		**0.9317**	**0.0010**	**0.9337**
P6	ha_insc	1000		0.9293	0.0010	0.9313
P7	ha_insc	1100		0.9254	0.0010	0.9274
P8	ha_insc	1200		0.9203	0.0010	0.9222
P9	ha_insc	1300		0.9157	0.0010	0.9176
ID	**Filename**	**H/Pu**	**Configuration Q**	**k_{eff}**	**σ**	**k_s**
Q1	ha_insc_up	500	Moderator = 25% poly/75% water Reflector in ICV and OCA = 25% poly/74% water/1% beryllium External reflector = 100% water Three shielded containers in a row, fissile sphere located in upper right corner of middle shielded container (see Figure 7-1).	0.9009	0.0010	0.9029
Q2	ha_insc_up	600		0.9182	0.0010	0.9202
Q3	ha_insc_up	700		0.9270	0.0010	0.9289
Q4	ha_insc_up	800		0.9331	0.0010	0.9350
Q5	**ha_insc_up**	**900**		**0.9336**	**0.0010**	**0.9356**
Q6	ha_insc_up	1000		0.9319	0.0010	0.9339
Q7	ha_insc_up	1100		0.9265	0.0009	0.9283
Q8	ha_insc_up	1200		0.9236	0.0010	0.9256
Q9	ha_insc_up	1300		0.9184	0.0010	0.9204
ID	**Filename**	**H/Pu**	**Configuration R**	**k_{eff}**	**σ**	**k_s**
R1	ha_insc_up2	500	Moderator = 25% poly/75% water Reflector in ICV and OCA = 25% poly/74% water/1% beryllium External reflector = 100% water Three shielded containers in a row shifted up, fissile sphere located in upper right corner of middle shielded container (see Figure 7-1).	0.9008	0.0011	0.9030
R2	ha_insc_up2	600		0.9194	0.0010	0.9214
R3	ha_insc_up2	700		0.9276	0.0010	0.9296
R4	**ha_insc_up2**	**800**		**0.9338**	**0.0010**	**0.9358**
R5	ha_insc_up2	900		0.9336	0.0010	0.9356
R6	ha_insc_up2	1000		0.9327	0.0010	0.9347
R7	ha_insc_up2	1100		0.9310	0.0010	0.9330
R8	ha_insc_up2	1200		0.9236	0.0010	0.9256
R9	ha_insc_up2	1300		0.9205	0.0010	0.9225

(continued)

Table 7-1 – HAC Array Results, Case G, 325 FGE (2 of 4)

ID	Filename	H/Pu	Configuration S	k_{eff}	σ	k_s
S1	ha_insc_up2xr	500	Moderator = 25% poly/75% water ICV and OCA = 25% poly/74% water/1% beryllium External reflector = 100% water One shielded container modeled at side and top of ICV, fissile sphere located at side and top of shielded container (see Figure 7-1).	0.9012	0.0010	0.9032
S2	ha_insc_up2xr	600		0.9168	0.0010	0.9188
S3	ha_insc_up2xr	700		0.9271	0.0010	0.9291
S4	ha_insc_up2xr	800		0.9335	0.0010	0.9355
S5	**ha_insc_up2xr**	**900**		**0.9338**	**0.0010**	**0.9358**
S6	ha_insc_up2xr	1000		0.9333	0.0009	0.9351
S7	ha_insc_up2xr	1100		0.9269	0.0009	0.9287
S8	ha_insc_up2xr	1200		0.9235	0.0009	0.9254
S9	ha_insc_up2xr	1300		0.9186	0.0010	0.9206
ID	**Filename**	**H/Pu**	**Configuration T**	**k_{eff}**	**σ**	**k_s**
T1	ha_insc_up2x	500	Moderator = 25% poly/75% water ICV = 25% poly/74% water/1% beryllium OCA and external reflector = void One shielded container modeled at side and top of ICV, fissile sphere located at side and top of shielded container (see Figure 7-1).	0.9037	0.0011	0.9059
T2	ha_insc_up2x	600		0.9200	0.0010	0.9219
T3	ha_insc_up2x	700		0.9296	0.0010	0.9316
T4	ha_insc_up2x	800		0.9334	0.0010	0.9354
T5	**ha_insc_up2x**	**900**		**0.9348**	**0.0010**	**0.9368**
T6	ha_insc_up2x	1000		0.9334	0.0010	0.9354
T7	ha_insc_up2x	1100		0.9305	0.0010	0.9325
T8	ha_insc_up2x	1200		0.9268	0.0010	0.9287
T9	ha_insc_up2x	1300		0.9197	0.0010	0.9217
ID	**Filename**	**H/Pu**	**Configuration U**	**k_{eff}**	**σ**	**k_s**
U1	ha_insc_up2xy	500	Moderator = 25% poly/75% water ICV = 25% poly/74% water/1% beryllium OCA and external reflector = void One shielded container modeled at side “corner” and top of ICV, fissile sphere located at side “corner” and top of shielded container (see Figure 7-1).	0.9010	0.0010	0.9030
U2	ha_insc_up2xy	600		0.9171	0.0012	0.9195
U3	ha_insc_up2xy	700		0.9279	0.0011	0.9301
U4	ha_insc_up2xy	800		0.9321	0.0010	0.9341
U5	**ha_insc_up2xy**	**900**		**0.9336**	**0.0009**	**0.9355**
U6	ha_insc_up2xy	1000		0.9323	0.0011	0.9345
U7	ha_insc_up2xy	1100		0.9299	0.0009	0.9318
U8	ha_insc_up2xy	1200		0.9252	0.0009	0.9270
U9	ha_insc_up2xy	1300		0.9197	0.0010	0.9217
ID	**Filename**	**H/Pu**	**Configuration V**	**k_{eff}**	**σ**	**k_s**
V1	ha_nosc_x	500	Moderator = 25% poly/75% water ICV = 25% poly/74% water/1% beryllium OCA and external reflector = void No shielded container, fissile sphere located at side and top of ICV (see Figure 7-1).	0.8900	0.0010	0.8920
V2	ha_nosc_x	600		0.9083	0.0010	0.9103
V3	ha_nosc_x	700		0.9179	0.0010	0.9199
V4	ha_nosc_x	800		0.9255	0.0010	0.9275
V5	**ha_nosc_x**	**900**		**0.9273**	**0.0011**	**0.9295**
V6	ha_nosc_x	1000		0.9263	0.0010	0.9283
V7	ha_nosc_x	1100		0.9233	0.0010	0.9253
V8	ha_nosc_x	1200		0.9187	0.0009	0.9206
V9	ha_nosc_x	1300		0.9135	0.0009	0.9152

(continued)

Table 7-1 – HAC Array Results, Case G, 325 FGE (3 of 4)

ID	Filename	H/Pu	Configuration W	k_{eff}	σ	k_s
W1	ha_nosc_upxy	500	Moderator = 25% poly/75% water ICV = 25% poly/74% water/1% beryllium OCA and external reflector = void No shielded container, fissile sphere located at "corner" and top of ICV (see Figure 7-1).	0.8862	0.0013	0.8888
W2	ha_nosc_upxy	600		0.9037	0.0010	0.9057
W3	ha_nosc_upxy	700		0.9144	0.0010	0.9164
W4	ha_nosc_upxy	800		0.9206	0.0010	0.9226
W5	**ha_nosc_upxy**	**900**		**0.9233**	**0.0010**	**0.9253**
W6	ha_nosc_upxy	1000		0.9233	0.0009	0.9251
W7	ha_nosc_upxy	1100		0.9193	0.0010	0.9213
W8	ha_nosc_upxy	1200		0.9177	0.0010	0.9196
W9	ha_nosc_upxy	1300		0.9112	0.0009	0.9130
ID	**Filename**	**H/Pu**	**Configuration X**	**k_{eff}**	**σ**	**k_s**
X1	ha_osc_x	500	Moderator = 25% poly/75% water ICV = 25% poly/74% water/1% beryllium OCA and external reflector = void One shielded container modeled to the left of the fissile sphere, fissile sphere located at side and top of shielded container (see Figure 7-1).	0.8899	0.0011	0.8921
X2	ha_osc_x	600		0.9095	0.0010	0.9115
X3	ha_osc_x	700		0.9193	0.0011	0.9215
X4	ha_osc_x	800		0.9260	0.0010	0.9280
X5	**ha_osc_x**	**900**		**0.9288**	**0.0011**	**0.9310**
X6	ha_osc_x	1000		0.9270	0.0011	0.9292
X7	ha_osc_x	1100		0.9234	0.0009	0.9253
X8	ha_osc_x	1200		0.9206	0.0010	0.9226
X9	ha_osc_x	1300		0.9120	0.0010	0.9140
ID	**Filename**	**H/Pu**	**Configuration Y**	**k_{eff}**	**σ**	**k_s**
Y1	ha_insc_up2x_void	800	Moderator = 25% poly/75% water ICV, OCA, and external reflector = void One shielded container modeled at side and top of ICV, fissile sphere located at side and top of shielded container (see Figure 7-1).	0.8955	0.0010	0.8975
Y2	ha_insc_up2x_void	900		0.9013	0.0010	0.9033
Y3	ha_insc_up2x_void	1000		0.9072	0.0010	0.9091
Y4	**ha_insc_up2x_void**	**1100**		**0.9087**	**0.0010**	**0.9106**
Y5	ha_insc_up2x_void	1200		0.9079	0.0009	0.9097
Y6	ha_insc_up2x_void	1300		0.9060	0.0009	0.9077
Y7	ha_insc_up2x_void	1400		0.9037	0.0009	0.9054
Y8	ha_insc_up2x_void	1500		0.8980	0.0009	0.8998

(continued)

Table 7-1 – HAC Array Results, Case G, 325 FGE (4 of 4)

ID	Filename	H/Pu	VF	Configuration Z	k_{eff}	σ	k_s
S5	**ha_insc_up2xr**	**900**	**1**	Moderator = 25% poly/75% water	**0.9338**	**0.0010**	**0.9358**
Z1	ha_insc_up2xr_intv	900	0.95	The densities of all reflector regions (ICV, OCA, external) are multiplied by the volume fraction (VF) listed.	0.9303	0.0010	0.9323
Z2	ha_insc_up2xr_intv	900	0.9		0.9290	0.0010	0.9310
Z3	ha_insc_up2xr_intv	900	0.75		0.9203	0.0010	0.9223
Z4	ha_insc_up2xr_intv	900	0.5	ICV and OCA= 25% poly/74% water/1% beryllium	0.9005	0.0012	0.9029
Z5	ha_insc_up2xr_intv	900	0.25		0.8675	0.0010	0.8695
Z6	ha_insc_up2xr_intv	900	0.1	External reflector = 100% water	0.8431	0.0011	0.8453
Z7	ha_insc_up2xr_intv	900	0.01	One shielded container modeled at side and top of ICV, fissile sphere located at side and top of shielded container (see Figure 7-1).	0.8321	0.0010	0.8341
Z8	ha_insc_up2xr_intv	900	0.001		0.8710	0.0010	0.8730
Y2	ha_insc_up2x_void	900	0		0.9013	0.0010	0.9033
ID	**Filename**	**H/Pu**	**VF**	**Configuration AA**	**k_{eff}**	**σ**	**k_s**
S7	**ha_insc_up2xr**	**1100**	**1**	Moderator = 25% poly/75% water	**0.9269**	**0.0009**	**0.9287**
AA1	ha_insc_up2xr_intv2	1100	0.95	The densities of all reflector regions (ICV, OCA, external) are multiplied by the volume fraction (VF) listed.	0.9264	0.0010	0.9284
AA2	ha_insc_up2xr_intv2	1100	0.9		0.9243	0.0009	0.9262
AA3	ha_insc_up2xr_intv2	1100	0.75		0.9162	0.0011	0.9184
AA4	ha_insc_up2xr_intv2	1100	0.5	ICV and OCA= 25% poly/74% water/1% beryllium	0.8984	0.0010	0.9004
AA5	ha_insc_up2xr_intv2	1100	0.25		0.8735	0.0010	0.8755
AA6	ha_insc_up2xr_intv2	1100	0.1	External reflector = 100% water	0.8494	0.0010	0.8514
AA7	ha_insc_up2xr_intv2	1100	0.01	One shielded container modeled at side and top of ICV, fissile sphere located at side and top of shielded container (see Figure 7-1).	0.8406	0.0010	0.8426
AA8	ha_insc_up2xr_intv2	1100	0.001		0.8814	0.0010	0.8834
Y4	ha_insc_up2x_void	1100	0		0.9087	0.0010	0.9106

Table 7-2 – HAC Array Results, Case H, 245 FGE

ID	Filename	H/Pu	Configuration BB	k_{eff}	σ	k_s
BB1	ha245_insc_up	500	Moderator = 100% poly ICV and shielded container = 99% poly/1% beryllium OCA = 25% poly/74% water/1% beryllium External reflector = 100% water Three shielded containers in a row, fissile sphere located in upper right corner of middle shielded container (see Figure 7-2).	0.8935	0.0010	0.8955
BB2	ha245_insc_up	600		0.9114	0.0010	0.9134
BB3	ha245_insc_up	700		0.9188	0.0010	0.9208
BB4	ha245_insc_up	800		0.9249	0.0010	0.9269
BB5	**ha245_insc_up**	**900**		**0.9279**	**0.0011**	**0.9301**
BB6	ha245_insc_up	1000		0.9257	0.0010	0.9277
BB7	ha245_insc_up	1100		0.9254	0.0010	0.9273
BB8	ha245_insc_up	1200		0.9195	0.0010	0.9215
BB9	ha245_insc_up	1300		0.9118	0.0011	0.9140
ID	**Filename**	**H/Pu**	**Configuration CC**	**k_{eff}**	**σ**	**k_s**
CC1	ha245_insc_up2x	500	Moderator = 100% poly ICV and shielded container = 99% poly/1% beryllium OCA and external reflector = void One shielded container modeled at side and top of ICV, fissile sphere located at side and top of shielded container (see Figure 7-2).	0.8947	0.0011	0.8969
CC2	ha245_insc_up2x	600		0.9136	0.0010	0.9156
CC3	ha245_insc_up2x	700		0.9236	0.0010	0.9256
CC4	ha245_insc_up2x	800		0.9275	0.0010	0.9295
CC5	**ha245_insc_up2x**	**900**		**0.9321**	**0.0009**	**0.9340**
CC6	ha245_insc_up2x	1000		0.9284	0.0010	0.9304
CC7	ha245_insc_up2x	1100		0.9235	0.0009	0.9254
CC8	ha245_insc_up2x	1200		0.9213	0.0009	0.9232
CC9	ha245_insc_up2x	1300		0.9163	0.0009	0.9180
ID	**Filename**	**H/Pu**	**Configuration DD**	**k_{eff}**	**σ**	**k_s**
DD1	ha245_insc_up2xp	500	Moderator = 100% poly Shielded container = 99% poly/1% beryllium ICV, OCA and external reflector = void One shielded container modeled at side and top of ICV, fissile sphere located at side and top of shielded container (see Figure 7-2).	0.8985	0.0010	0.9005
DD2	ha245_insc_up2xp	600		0.9145	0.0010	0.9165
DD3	ha245_insc_up2xp	700		0.9237	0.0011	0.9259
DD4	ha245_insc_up2xp	800		0.9307	0.0010	0.9326
DD5	**ha245_insc_up2xp**	**900**		**0.9315**	**0.0010**	**0.9334**
DD6	ha245_insc_up2xp	1000		0.9291	0.0010	0.9311
DD7	ha245_insc_up2xp	1100		0.9264	0.0009	0.9282
DD8	ha245_insc_up2xp	1200		0.9211	0.0010	0.9230
DD9	ha245_insc_up2xp	1300		0.9162	0.0009	0.9181

(continued)

Table 7-2 – HAC Array Results, Case H, 245 FGE (concluded)

ID	Filename	H/Pu	VF	Configuration EE	k_{eff}	σ	k_s
EE1	ha245_insc_up2xp_intv	900	1	Moderator = 100% poly Shielded container = 99% poly/1% beryllium ICV = void OCA and external reflector = multiplied by the volume fraction (VF) listed One shielded container modeled at side and top of ICV, fissile sphere located at side and top of shielded container (see Figure 7-2).	0.9281	0.0012	0.9305
EE2	ha245_insc_up2xp_intv	900	0.95		0.9271	0.0010	0.9291
EE3	ha245_insc_up2xp_intv	900	0.9		0.9256	0.0010	0.9276
EE4	ha245_insc_up2xp_intv	900	0.75		0.9274	0.0010	0.9294
EE5	ha245_insc_up2xp_intv	900	0.5		0.9276	0.0010	0.9296
EE6	ha245_insc_up2xp_intv	900	0.25		0.9275	0.0010	0.9295
EE7	ha245_insc_up2xp_intv	900	0.1		0.9292	0.0010	0.9312
EE8	ha245_insc_up2xp_intv	900	0.01		0.9296	0.0009	0.9315
EE9	ha245_insc_up2xp_intv	900	0.001		0.9306	0.0010	0.9326
DD5	**ha245_insc_up2xp**	**900**	**0**		**0.9315**	**0.0010**	**0.9334**

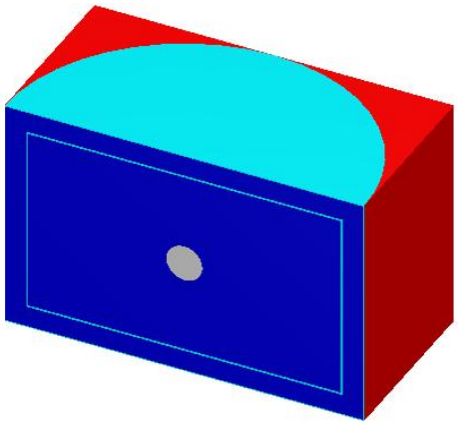

Configuration O

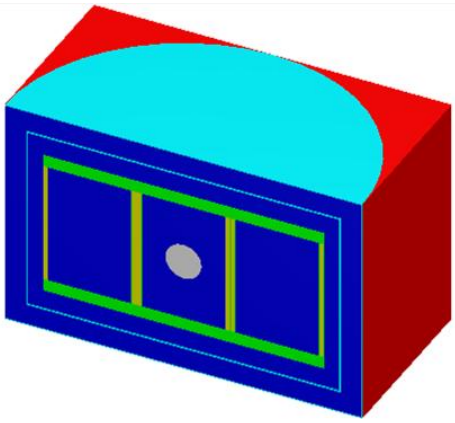

Configuration P

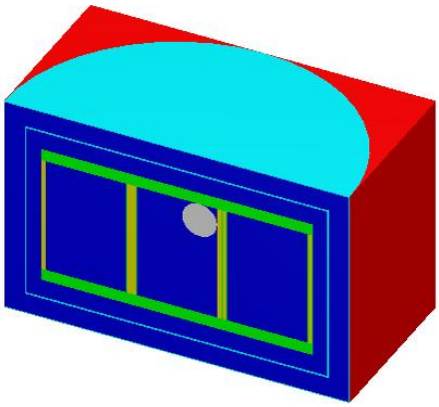

Configuration Q

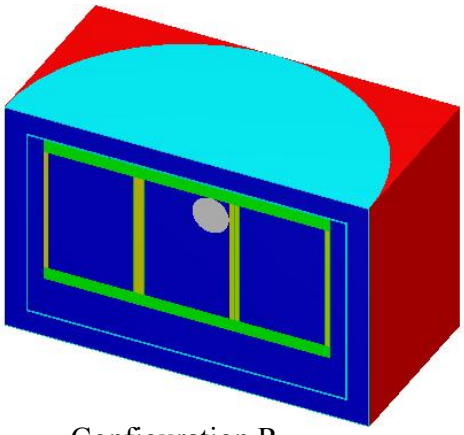

Configuration R

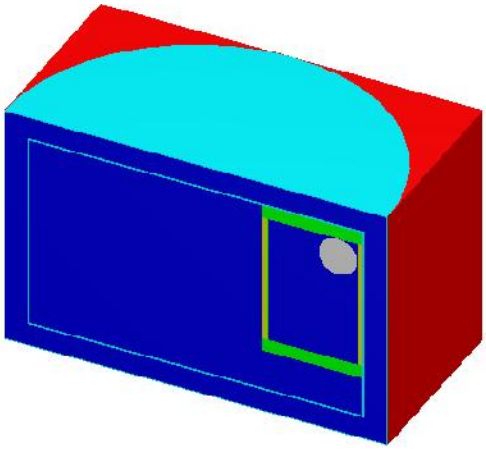

Configuration S

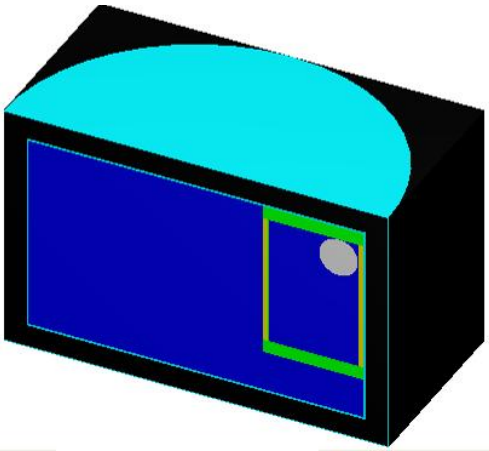

Configuration T

(continued)

Figure 7-1 – HAC Array Geometry, Case G

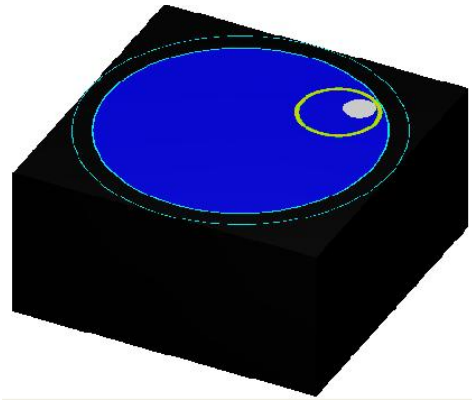

Configuration U

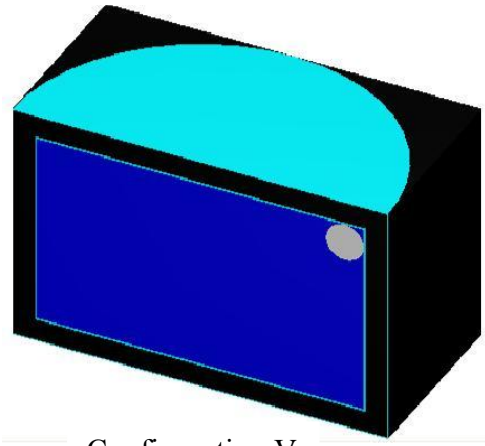

Configuration V

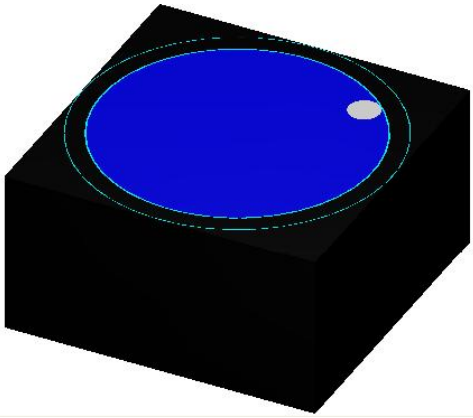

Configuration W

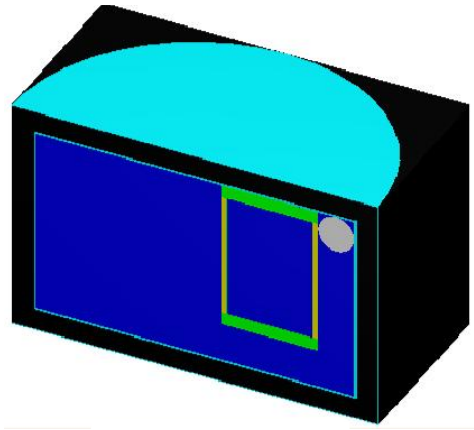

Configuration X

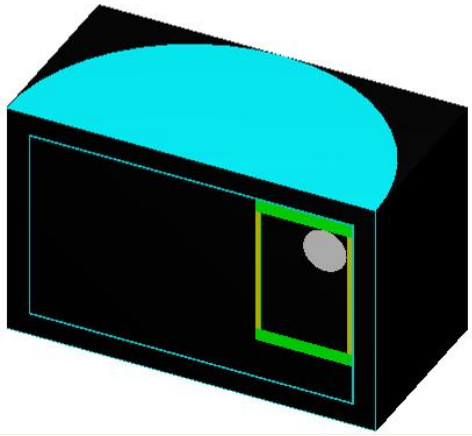

Configuration Y

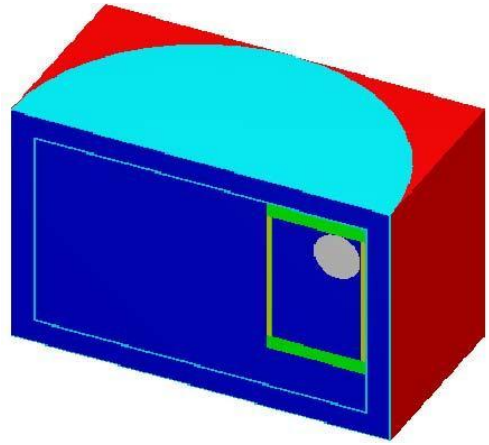

Configuration Z/AA

Figure 7-1 – HAC Array Geometry, Case G (concluded)

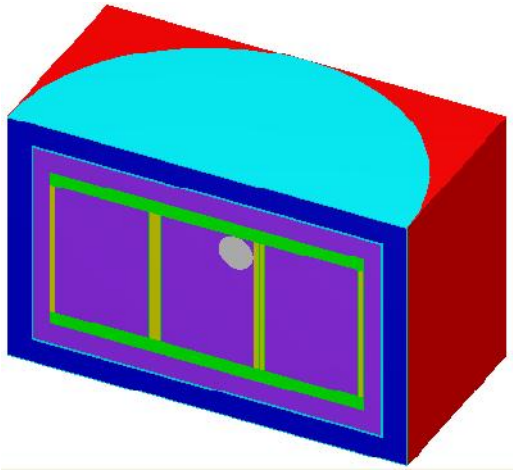

Configuration BB

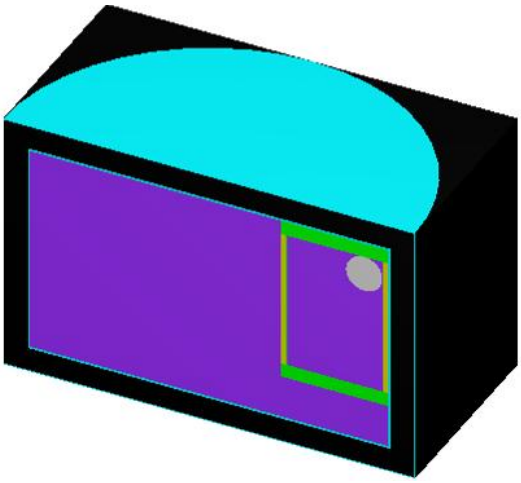

Configuration CC

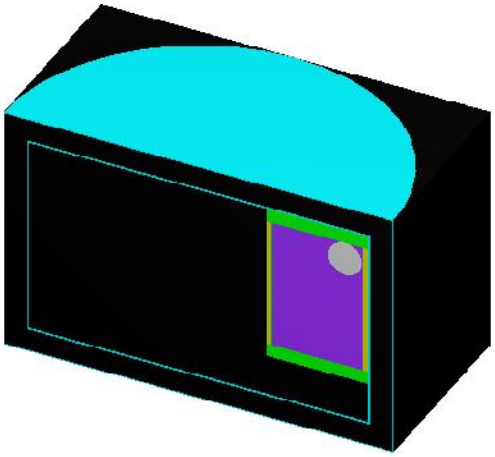

Configuration DD

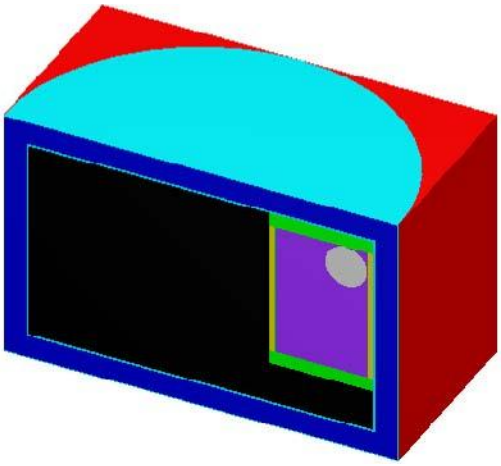

Configuration EE

Figure 7-2 – HAC Array Geometry, Case H

8.0 Fissile Material Packages for Air Transport

This section is not applicable.

9.0 Benchmark Evaluations

The KENO-V.a Monte Carlo criticality code has been used extensively in criticality evaluations. The 238 energy-group, ENDF-B/V cross-section library employed here has been selected based on its relatively fine neutron energy group structure. This section justifies the validity of this computation tool and data library combination for application to the HalfPACT package criticality analysis.

The ORNL USLSTATS code, described in Appendix C, User's Manual for USLSTATS V1.0, of NUREG/CR-6361 [7], is used to establish an upper subcriticality limit, USL, for the analysis. Computed multiplication factors, k_{eff}, for the HalfPACT package are deemed to be adequately subcritical if the computed value of k_{eff} plus two standard deviations is below the USL as follows:

$$k_s = k_{eff} + 2\sigma < USL$$

The USL includes the combined effects of code bias, uncertainty in the benchmark experiments, uncertainty in the computational evaluation of the benchmark experiments, and an administrative margin of subcriticality. The USL is determined using the confidence band with administrative margin technique (USLSTATS Method 1). The result of the statistical analysis of the benchmark experiments is a USL of 0.9377. Due to the significant positive bias exhibited by the code and library for the benchmark experiments, the USL is constant with respect to the various parameters selected for the benchmark analysis.

9.1 Applicability of Benchmark Experiments

A total of 196 benchmark experiments of water-reflected solutions of plutonium nitrate are evaluated using the KENO-V.a Monte Carlo criticality code with the SCALE-PC v5, 238 energy-group, ENDF-B/V cross-section library. The benchmark cases are evaluated with respect to two independent parameters: 1) the H/Pu ratio, and 2) the average fission energy group (AEG).

Detailed descriptions of the benchmark experiments are obtained from the OECD Nuclear Energy Agency's *International Handbook of Evaluated Criticality Safety Benchmark Experiments* [9]. The critical experiments selected for this analysis are presented in Table 9-1. Experiments with beryllium and Pu as the fissile component are not available. The only experiments with beryllium in the thermal energy range identified from the OECD Handbook contained U-233 as the fissile isotope. Thus, 31 benchmarks with U-233 and beryllium in the thermal energy range and 15 benchmarks with U-233 and no beryllium also in the thermal energy range are evaluated. With respect to validation of polyethylene, CH_2, in the models, some of the U-233 benchmarks contained polyethylene and some of the plutonium experiments contained Plexiglas, which also contains carbon.

Because the shielded containers have a lead wall, thermal benchmarks for lead-reflected Pu systems are also desired. As no such benchmarks are available, eight lead or steel reflected low-enriched uranium (LEU) benchmarks are utilized.

All criticality models of the HalfPACT package fall within the range of applicability of the benchmark experiments for the H/Pu ratio and AEG trending parameters as follows:

Range of Applicability for HalfPACT Criticality Analysis	Range of Applicability for Trending Parameters
$500 \leq$ H/Pu Ratio $\leq 1{,}500$ $214 \leq$ AEG ≤ 219	$45 \leq$ H/Pu Ratio $\leq 2{,}730$ $171 \leq$ AEG ≤ 220

Only thermal benchmark experiments are analyzed. Multiplication factors are insignificant when the package contents are unmoderated.

9.2 Bias Determination

The USL is calculated by application of the USLSTATS computer program [7]. USLSTATS receives as input the k_{eff} as calculated by KENO, the total 1-σ uncertainty (combined benchmark and KENO uncertainties), and a trending parameter.

The uncertainty value, σ_{total}, assigned to each case is a combination of the benchmark uncertainty for each experiment, σ_{bench}, and the Monte Carlo uncertainty associated with the particular computational evaluation of the case, σ_{KENO}, or:

$$\sigma_{total} = (\sigma_{bench}^2 + \sigma_{KENO}^2)^{1/2}$$

These values are input into the USLSTATS program in addition to the following parameters, which are the values recommended by the USLSTATS user's manual [7]:

- P, proportion of population falling above lower tolerance level = 0.995 (note that this parameter is required input but is not utilized in the calculation of USL Method 1)
- 1-γ, confidence on fit = 0.95
- α, confidence on proportion P = 0.95 (note that this parameter is required input but is not utilized in the calculation of USL Method 1)
- Δk_m, administrative margin used to ensure subcriticality = 0.05.

These data are followed by triplets of trending parameter value, computed k_{eff}, and uncertainty for each case. A confidence band analysis is performed on the data for each trending parameter using USL Method 1. All benchmark data used as input to USLSTATS are reported in Table 9-2.

Two trending parameters are identified for determination of the bias. First, the AEG is used in order to characterize any code bias with respect to neutron spectral effects. The USL is calculated vs. AEG separately for five scenarios:

1. U-233 experiments without beryllium
2. U-233 experiments with beryllium
3. Pu experiments
4. Combined Pu experiments and U-233 experiments with beryllium
5. Combined Pu experiments, U-233 experiments with beryllium, and lead/steel reflector experiments

Note that several of the U-233 benchmarks (with beryllium) are quite poor (k ~ 0.97). Because the U-233 fissile isotope introduces a component that is not relative to the calculations performed for the HalfPACT and may have a distinct bias of its own, comparison of the USL for the U-233 experiments with beryllium to the USL for those without beryllium allows the effect of the beryllium reflector to be separated from the effect of the U-233 isotope. Next, the H/Pu ratio of each experimental case containing Pu is used in order to characterize the material and geometric properties of each sphere. The U-233 and LEU lead and steel reflector results are not considered in the trending with respect to H/Pu as this parameter is not directly applicable. Finally, the Pu experiments are combined with the U-233 (with beryllium) and LEU lead and steel reflector experiments.

The USLs calculated using USLSTATS Method 1 for the benchmark combinations discussed above are tabulated in Table 9-3. The USL (AEG) calculated based on the combined results of the U-233 (with beryllium) and Pu experiments of 0.9377 is chosen as the USL for this analysis. This USL value is 0.0017 below that of the Pu experiments alone. The addition of the LEU steel and lead reflected benchmarks has little effect on the USL.

At the high AEG values applicable to HalfPACT, the U-233 benchmarks without beryllium result in a lower USL (0.0019) than calculated from the U-233 benchmarks with beryllium. Both of the U-233 USL values are lower than the Pu experiment USL values, indicating that the U-233 isotope in the experiments has a more significant effect on the USL than the beryllium. Thus, the USL based on the combined results of the U-233 (with beryllium) and Pu experiments chosen adequately accounts for any bias attributable to beryllium.

In addition, the USL calculated for the Pu experiments using the H/Pu ratio as the trending parameter do not differ significantly from the USL for the Pu experiments using AEG, and are bounded by the chosen USL value of 0.9377. USLSTATS calculates constant USL values with respect to the H/Pu ratio, indicating no appreciable trend with respect to this parameter.

Table 9-1 – Benchmark Experiments Utilized

Series	Title
PU-SOL-THERM-001	Water-Reflected 11.5-Inch Diameter Spheres Of Plutonium Nitrate Solutions
PU-SOL-THERM-002	Water-Reflected 12-Inch Diameter Spheres Of Plutonium Nitrate Solutions
PU-SOL-THERM-003	Water-Reflected 13-Inch Diameter Spheres Of Plutonium Nitrate Solutions
PU-SOL-THERM-004	Water-Reflected 14-Inch Diameter Spheres Of Plutonium Nitrate Solutions 0.54% To 3.43% Pu240
PU-SOL-THERM-005	Water-Reflected 14-Inch Diameter Spheres Of Plutonium Nitrate Solutions 4.05% And 4.40% Pu240
PU-SOL-THERM-006	Water-Reflected 15-Inch Diameter Spheres Of Plutonium Nitrate Solutions
PU-SOL-THERM-007	Water-Reflected 11.5-Inch Diameter Spheres Partly Filled with Plutonium Nitrate Solutions
PU-SOL-THERM-009	Unreflected 48-Inch-Diameter Sphere Of Plutonium Nitrate Solution
PU-SOL-THERM-010	Water-Reflected 9-, 10-, 11-, And 12-Inch-Diameter Cylinders Of Plutonium Nitrate Solutions
PU-SOL-THERM-011	Bare 16- And 18-Inch-Diameter Spheres Of Plutonium Nitrate Solutions
PU-SOL-THERM-014	Interacting Cylinders of 300-mm Diameter Spheres of Plutonium Nitrate Solution (115.1gPu/L) in Air
PU-SOL-THERM-015	Interacting Cylinders of 300-mm Diameter with Plutonium Nitrate Solution (152.5gPu/L) in Air
PU-SOL-THERM-016	Interacting Cylinders of 300-mm and 256-mm Diameters with Plutonium Nitrate Solution (152.5 and 115.1 gPu/L) and Nitric Acid (2n) in Air
PU-SOL-THERM-017	Interacting Cylinders of 256-mm and 300-mm Diameters with Plutonium Nitrate Solution (115.1 gPu/L) in Air
PU-SOL-THERM-020	Water-Reflected and Water-Cadmium Reflected 14-inch Diameter Spheres of Plutonium Nitrate Solutions
PU-SOL-THERM-021	Water-Reflected and Bare 15.2-inch Diameter Spheres of Plutonium Nitrate Solutions
PU-SOL-THERM-024	Slabs of Plutonium Nitrate Solutions Reflected by 1-inch Thick Plexiglas
U233-SOL-THERM-001	Unreflected Spheres of ^{233}U Nitrate Solutions
U233-SOL-THERM-003	Paraffin-Reflected 5-, 5.4-, 6-, 6.6-, 7.5-, 8-, 8.5-, 9-, and 12-inch Diameter Cylinders of ^{233}U Uranyl Fluoride Solutions
U233-SOL-THERM-015	Uranyl-Fluoride (^{233}U) Solutions in Spherical Stainless Steel Vessels with Reflectors of Be, CH_2, and Be-CH_2 Composites
LEU-COMP-THERM-010	Water-Moderated U(4.31)O_2 Fuel Rods Reflected by Two Lead, Uranium, or Steel Walls

Table 9-2 – Benchmark Experiment Data

No.	Case Name	k_{eff}	σ_{KENO}	σ_{BENCH}	σ_{TOTAL}	AEG	H/Pu
1	pust001_case_1	1.0080	0.0011	0.0050	0.0051	212.494	352.9
2	pust001_case_2	1.0102	0.0010	0.0050	0.0051	209.982	258.1
3	pust001_case_3	1.0126	0.0011	0.0050	0.0051	207.749	204.1
4	pust001_case_4	1.0068	0.0010	0.0050	0.0051	206.409	181
5	pust001_case_5	1.0095	0.0011	0.0050	0.0051	205.787	171.2
6	pust001_case_6	1.0085	0.0010	0.0050	0.0051	195.740	86.7
7	pust002_case_1	1.0076	0.0010	0.0047	0.0048	214.684	508
8	pust002_case_2	1.0093	0.0009	0.0047	0.0048	214.459	489.2
9	pust002_case_3	1.0066	0.0010	0.0047	0.0048	213.805	437.3
10	pust002_case_4	1.0104	0.0009	0.0047	0.0048	213.351	407.5
11	pust002_case_5	1.0125	0.0010	0.0047	0.0048	212.894	380.6
12	pust002_case_6	1.0080	0.0010	0.0047	0.0048	211.961	333.5
13	pust002_case_7	1.0113	0.0012	0.0047	0.0049	211.138	299.3
14	pust003_case_1	1.0066	0.0010	0.0047	0.0048	216.626	774.1
15	pust003_case_2	1.0067	0.0010	0.0047	0.0048	216.438	742.7
16	pust003_case_3	1.0084	0.0009	0.0047	0.0048	216.067	677.2
17	pust003_case_4	1.0086	0.0010	0.0047	0.0048	215.944	660.5
18	pust003_case_5	1.0115	0.0010	0.0047	0.0048	215.528	607.2
19	pust003_case_6	1.0100	0.0010	0.0047	0.0048	214.967	545.3
20	pust003_case_7	1.0112	0.0009	0.0047	0.0048	216.485	714.8
21	pust003_case_8	1.0097	0.0010	0.0047	0.0048	216.331	692.1
22	pust004_case_1	1.0076	0.0010	0.0047	0.0048	217.461	981.7
23	pust004_case_2	1.0043	0.0009	0.0047	0.0048	217.415	898.6
24	pust004_case_3	1.0041	0.0009	0.0047	0.0048	217.240	864
25	pust004_case_4	1.0043	0.0010	0.0047	0.0048	217.028	842
26	pust004_case_5	1.0034	0.0010	0.0047	0.0048	217.259	780.2
27	pust004_case_6	1.0065	0.0009	0.0047	0.0048	217.190	668
28	pust004_case_7	1.0099	0.0009	0.0047	0.0048	217.033	573.3
29	pust004_case_8	1.0041	0.0010	0.0047	0.0048	216.915	865
30	pust004_case_9	1.0048	0.0010	0.0047	0.0048	216.587	872.2
31	pust004_case_10	1.0070	0.0009	0.0047	0.0048	215.880	971.6
32	pust004_case_11	1.0052	0.0009	0.0047	0.0048	215.116	929.6
33	pust004_case_12	1.0065	0.0009	0.0047	0.0048	217.031	884.1
34	pust004_case_13	1.0048	0.0009	0.0047	0.0048	217.078	925.5
35	pust005_case_1	1.0079	0.0009	0.0047	0.0048	217.079	866.4
36	pust005_case_2	1.0089	0.0010	0.0047	0.0048	216.910	832.7
37	pust005_case_3	1.0076	0.0011	0.0047	0.0048	216.726	800.7
38	pust005_case_4	1.0099	0.0009	0.0047	0.0048	216.361	734.4
39	pust005_case_5	1.0095	0.0008	0.0047	0.0048	215.902	666.1
40	pust005_case_6	1.0097	0.0010	0.0047	0.0048	215.448	607.9
41	pust005_case_7	1.0069	0.0009	0.0047	0.0048	214.994	557.2
42	pust005_case_8	1.0048	0.0008	0.0047	0.0048	216.897	830.6
43	pust005_case_9	1.0040	0.0010	0.0047	0.0048	216.677	788.9
44	pust006_case_1	1.0056	0.0009	0.0035	0.0036	217.611	1028.2
45	pust006_case_2	1.0078	0.0009	0.0035	0.0036	217.462	986.2

No.	Case Name	k_{eff}	σ_{KENO}	σ_{BENCH}	σ_{TOTAL}	AEG	H/Pu
46	pust006_case_3	1.0072	0.0009	0.0035	0.0036	217.147	910.9
47	pust007_case_2	1.0092	0.0010	0.0047	0.0048	198.875	102.6
48	pust007_case_3	1.0046	0.0010	0.0047	0.0048	199.604	110.11
49	pust007_case_5	1.0089	0.0010	0.0047	0.0048	209.856	253.3
50	pust007_case_6	1.0061	0.0010	0.0047	0.0048	209.694	247.3
51	pust007_case_7	1.0076	0.0010	0.0047	0.0048	209.796	250.5
52	pust007_case_8	1.0011	0.0010	0.0047	0.0048	209.565	246.5
53	pust007_case_9	0.9988	0.0010	0.0047	0.0048	209.627	246.5
54	pust007_case_10	1.0027	0.0011	0.0047	0.0048	210.442	275.5
55	pust009_case_1	1.0197	0.0007	0.0033	0.0034	219.728	2579.3
56	pust009_case_2	1.0245	0.0008	0.0033	0.0034	219.816	2706.5
57	pust009_case_3	1.0240	0.0006	0.0033	0.0034	219.832	2729.8
58	pust010_case_1.11	1.0161	0.0010	0.0048	0.0049	214.116	471.3
59	pust010_case_1.12	1.0130	0.0010	0.0048	0.0049	214.881	527.7
60	pust010_case_1.9	1.0211	0.0010	0.0048	0.0049	210.101	259.3
61	pust010_case_2.11	1.0134	0.0010	0.0048	0.0049	214.879	542.3
62	pust010_case_2.12	1.0139	0.0009	0.0048	0.0049	215.519	600.5
63	pust010_case_2.9	1.0182	0.0009	0.0048	0.0049	212.377	346.8
64	pust010_case_3.11	1.0126	0.0009	0.0048	0.0049	215.027	542.3
65	pust010_case_3.12	1.0200	0.0010	0.0048	0.0049	216.242	707
66	pust010_case_3.9	1.0126	0.0010	0.0048	0.0049	214.301	470.4
67	pust010_case_4.11	1.0064	0.0010	0.0048	0.0049	215.363	588.7
68	pust010_case_4.12	1.0150	0.0009	0.0048	0.0049	216.856	825.1
69	pust010_case_5.11	1.0061	0.0010	0.0048	0.0049	215.735	646.5
70	pust010_case_6.11	1.0176	0.0010	0.0048	0.0049	213.329	402.3
71	pust010_case_7.11	1.0055	0.0010	0.0048	0.0049	214.804	519.8
72	pust011_case_1.16	1.0142	0.0010	0.0052	0.0053	215.821	733
73	pust011_case_1.18	1.0001	0.0009	0.0052	0.0053	217.686	1157.3
74	pust011_case_2.16	1.0199	0.0010	0.0052	0.0053	215.637	705.5
75	pust011_case_2.18	1.0071	0.0009	0.0052	0.0053	217.520	1103.2
76	pust011_case_3.16	1.0214	0.0010	0.0052	0.0053	215.294	662.8
77	pust011_case_3.18	1.0024	0.0009	0.0052	0.0053	217.526	1109.8
78	pust011_case_4.16	1.0131	0.0010	0.0052	0.0053	215.190	653.4
79	pust011_case_4.18	0.9990	0.0009	0.0052	0.0053	217.314	1053.7
80	pust011_case_5.16	1.0109	0.0011	0.0052	0.0053	214.156	550.7
81	pust011_case_5.18	1.0086	0.0009	0.0052	0.0053	217.078	995.4
82	pust011_case_6.18	1.0055	0.0009	0.0052	0.0053	216.477	870.4
83	pust011_case_7.18	1.0066	0.0010	0.0052	0.0053	217.354	1056.4
84	pust014_case_1	1.0077	0.0012	0.0032	0.0034	205.465	210.2
85	pust014_case_3	1.0054	0.0010	0.0032	0.0034	205.499	210.2
86	pust014_case_4	1.0035	0.0011	0.0032	0.0034	205.494	210.2
87	pust014_case_5	1.0065	0.0011	0.0032	0.0034	205.508	210.2
88	pust014_case_6	1.0072	0.0011	0.0032	0.0034	205.514	210.2
89	pust014_case_7	1.0070	0.0010	0.0043	0.0044	205.439	210.2
90	pust014_case_8	1.0063	0.0010	0.0032	0.0034	205.438	210.2
91	pust014_case_9	1.0044	0.0010	0.0032	0.0034	205.480	210.2
92	pust014_case_10	1.0069	0.0011	0.0032	0.0034	205.499	210.2

No.	Case Name	k_{eff}	σ_{KENO}	σ_{BENCH}	σ_{TOTAL}	AEG	H/Pu
93	pust014_case_11	1.0054	0.0010	0.0032	0.0034	205.519	210.2
94	pust014_case_12	1.0057	0.0010	0.0032	0.0034	205.525	210.2
95	pust014_case_13	1.0078	0.0010	0.0043	0.0044	205.424	210.2
96	pust014_case_14	1.0047	0.0010	0.0043	0.0044	205.440	210.2
97	pust014_case_15	1.0069	0.0010	0.0043	0.0044	205.509	210.2
98	pust014_case_16	1.0070	0.0011	0.0043	0.0044	205.533	210.2
99	pust014_case_17	1.0069	0.0010	0.0043	0.0044	205.527	210.2
100	pust014_case_18	1.0080	0.0011	0.0043	0.0044	205.442	210.2
101	pust014_case_19	1.0070	0.0010	0.0043	0.0044	205.456	210.2
102	pust014_case_20	1.0063	0.0010	0.0043	0.0044	205.508	210.2
103	pust014_case_21	1.0065	0.0010	0.0043	0.0044	205.516	210.2
104	pust014_case_22	1.0039	0.0011	0.0043	0.0044	205.533	210.2
105	pust014_case_23	1.0062	0.0011	0.0043	0.0044	205.534	210.2
106	pust014_case_24	1.0080	0.0011	0.0043	0.0044	205.385	210.2
107	pust014_case_25	1.0041	0.0011	0.0043	0.0044	205.430	210.2
108	pust014_case_26	1.0056	0.0010	0.0043	0.0044	205.479	210.2
109	pust014_case_27	1.0041	0.0011	0.0043	0.0044	205.516	210.2
110	pust014_case_28	1.0073	0.0011	0.0043	0.0044	205.524	210.2
111	pust014_case_29	1.0053	0.0011	0.0043	0.0044	205.527	210.2
112	pust014_case_30	1.0073	0.0011	0.0043	0.0044	205.427	210.2
113	pust014_case_31	1.0013	0.0012	0.0043	0.0045	205.417	210.2
114	pust014_case_33	1.0036	0.0010	0.0043	0.0044	205.477	210.2
115	pust014_case_34	1.0049	0.0010	0.0043	0.0044	205.480	210.2
116	pust015_case_1	1.0056	0.0011	0.0038	0.0040	201.235	155.3
117	pust015_case_2	1.0079	0.0010	0.0038	0.0039	201.270	155.3
118	pust015_case_3	1.0064	0.0011	0.0038	0.0040	201.276	155.3
119	pust015_case_4	1.0078	0.0011	0.0038	0.0040	201.307	155.3
120	pust015_case_5	1.0064	0.0010	0.0038	0.0039	201.319	155.3
121	pust015_case_6	1.0090	0.0011	0.0038	0.0040	201.342	155.3
122	pust015_case_7	1.0077	0.0010	0.0047	0.0048	201.232	155.3
123	pust015_case_8	1.0054	0.0011	0.0047	0.0048	201.244	155.3
124	pust015_case_9	1.0057	0.0011	0.0047	0.0048	201.284	155.3
125	pust015_case_10	1.0066	0.0010	0.0047	0.0048	201.338	155.3
126	pust015_case_11	1.0052	0.0011	0.0047	0.0048	201.213	155.3
127	pust015_case_12	1.0026	0.0011	0.0047	0.0048	201.247	155.3
128	pust015_case_13	1.0049	0.0010	0.0047	0.0048	201.292	155.3
129	pust015_case_14	1.0060	0.0012	0.0047	0.0049	201.329	155.3
130	pust015_case_15	1.0085	0.0010	0.0047	0.0048	201.196	155.3
131	pust015_case_16	1.0056	0.0010	0.0047	0.0048	201.233	155.3
132	pust015_case_17	1.0073	0.0010	0.0047	0.0048	201.285	155.3
133	pust016_case_1	1.0056	0.0011	0.0043	0.0044	201.232	155.3
134	pust016_case_2	1.0050	0.0010	0.0043	0.0044	201.259	155.3
135	pust016_case_3	1.0071	0.0010	0.0043	0.0044	201.300	155.3
136	pust016_case_4	1.0068	0.0011	0.0043	0.0044	201.297	155.3
137	pust016_case_5	1.0065	0.0011	0.0038	0.0040	205.458	210.2
138	pust016_case_6	1.0053	0.0011	0.0038	0.0040	205.487	210.2
139	pust016_case_7	1.0064	0.0010	0.0038	0.0039	205.503	210.2

No.	Case Name	k_{eff}	σ_{KENO}	σ_{BENCH}	σ_{TOTAL}	AEG	H/Pu
140	pust016_case_8	1.0081	0.0012	0.0038	0.0040	205.531	210.2
141	pust016_case_9	1.0056	0.0010	0.0033	0.0034	205.610	210.2
142	pust016_case_10	1.0062	0.0011	0.0033	0.0035	205.553	210.2
143	pust016_case_11	1.0060	0.0011	0.0033	0.0035	205.527	210.2
144	pust017_case_1	1.0047	0.0010	0.0038	0.0039	205.532	210.2
145	pust017_case_2	1.0059	0.0011	0.0038	0.0040	205.502	210.2
146	pust017_case_3	1.0064	0.0011	0.0038	0.0040	205.497	210.2
147	pust017_case_4	1.0035	0.0012	0.0038	0.0040	205.497	210.2
148	pust017_case_5	1.0054	0.0011	0.0038	0.0040	205.494	210.2
149	pust017_case_6	1.0073	0.0011	0.0038	0.0040	205.493	210.2
150	pust017_case_7	1.0061	0.0010	0.0038	0.0039	205.494	210.2
151	pust017_case_8	1.0076	0.0011	0.0038	0.0040	205.514	210.2
152	pust017_case_9	1.0028	0.0011	0.0038	0.0040	205.490	210.2
153	pust017_case_10	1.0059	0.0012	0.0038	0.0040	205.496	210.2
154	pust017_case_11	1.0061	0.0011	0.0038	0.0040	205.526	210.2
155	pust017_case_12	1.0063	0.0010	0.0038	0.0039	205.520	210.2
156	pust017_case_13	1.0064	0.0011	0.0038	0.0040	205.495	210.2
157	pust017_case_14	1.0056	0.0012	0.0038	0.0040	205.475	210.2
158	pust017_case_15	1.0066	0.0011	0.0038	0.0040	205.535	210.2
159	pust017_case_16	1.0063	0.0011	0.0038	0.0040	205.496	210.2
160	pust017_case_17	1.0072	0.0011	0.0038	0.0040	205.509	210.2
161	pust017_case_18	1.0056	0.0010	0.0038	0.0039	205.509	210.2
162	pust020_case_1	1.0086	0.0009	0.0059	0.0060	215.478	596.5
163	pust020_case_2	1.0086	0.0010	0.0059	0.0060	215.614	615.6
164	pust020_case_3	1.0063	0.0009	0.0059	0.0060	216.510	743.8
165	pust020_case_5	1.0085	0.0010	0.0059	0.0060	213.989	462.9
166	pust020_case_6	1.0091	0.0011	0.0059	0.0060	213.643	450.5
167	pust020_case_7	1.0024	0.0009	0.0059	0.0060	216.280	722.9
168	pust020_case_8	1.0078	0.0011	0.0059	0.0060	210.643	341.1
169	pust020_case_9	1.0001	0.0010	0.0059	0.0060	214.044	543.2
170	pust021_case_7	1.0107	0.0010	0.0032	0.0034	215.394	662
171	pust021_case_8	1.0034	0.0010	0.0065	0.0066	197.693	125
172	pust021_case_9	1.0111	0.0009	0.0032	0.0033	215.118	634
173	pust021_case_10	1.0114	0.0008	0.0025	0.0026	218.032	1107
174	pust024_case_1	1.0004	0.0009	0.0062	0.0063	191.669	87.5
175	pust024_case_2	1.0010	0.0011	0.0062	0.0063	191.830	87.5
176	pust024_case_3	0.9998	0.0009	0.0062	0.0063	191.900	87.5
177	pust024_case_4	1.0023	0.0010	0.0062	0.0063	192.020	87.5
178	pust024_case_5	0.9990	0.0010	0.0062	0.0063	192.017	87.5
179	pust024_case_6	0.9992	0.0009	0.0077	0.0077	173.510	44.9
180	pust024_case_7	1.0096	0.0010	0.0053	0.0054	201.087	143.9
181	pust024_case_8	1.0073	0.0010	0.0053	0.0054	201.162	143.9
182	pust024_case_9	1.0062	0.0010	0.0053	0.0054	201.192	143.9
183	pust024_case_10	1.0082	0.0010	0.0053	0.0054	201.338	143.9
184	pust024_case_11	1.0064	0.0010	0.0053	0.0054	201.377	143.9
185	pust024_case_12	1.0065	0.0009	0.0053	0.0054	201.435	143.9
186	pust024_case_13	1.0051	0.0009	0.0053	0.0054	201.438	143.9

No.	Case Name	k_{eff}	σ_{KENO}	σ_{BENCH}	σ_{TOTAL}	AEG	H/Pu
187	pust024_case_14	1.0021	0.0010	0.0053	0.0054	197.700	115.8
188	pust024_case_15	1.0008	0.0010	0.0053	0.0054	197.735	115.8
189	pust024_case_16	1.0010	0.0010	0.0053	0.0054	197.813	115.8
190	pust024_case_17	1.0032	0.0011	0.0053	0.0054	197.945	115.8
191	pust024_case_18	1.0079	0.0010	0.0051	0.0052	211.991	367.3
192	pust024_case_19	1.0093	0.0010	0.0051	0.0052	212.024	367.3
193	pust024_case_20	1.0074	0.0010	0.0051	0.0052	212.035	367.3
194	pust024_case_21	1.0100	0.0009	0.0051	0.0052	212.085	367.3
195	pust024_case_22	1.0062	0.0009	0.0051	0.0052	212.110	367.3
196	pust024_case_23	1.0050	0.0010	0.0051	0.0052	212.118	367.3
197	233st001case_1	0.9953	0.0008	0.0031	0.0032	218.369	NA
198	233st001case_2	0.9970	0.0007	0.0033	0.0034	218.181	NA
199	233st001case_3	0.9970	0.0007	0.0033	0.0034	218.001	NA
200	233st001case_4	0.9962	0.0007	0.0033	0.0034	217.823	NA
201	233st001case_5	0.9953	0.0007	0.0033	0.0034	217.647	NA
202	233st003case_40	1.0027	0.0011	0.0087	0.0088	192.739	NA
203	233st003case_41	1.0157	0.0011	0.0151	0.0151	191.259	NA
204	233st003case_42	1.0018	0.0010	0.0087	0.0088	191.871	NA
205	233st003case_45	1.0044	0.0011	0.0126	0.0126	180.273	NA
206	233st003case_55	1.0090	0.0013	0.0122	0.0123	176.193	NA
207	233st003case_57	1.0200	0.0012	0.0087	0.0088	203.986	NA
208	233st003case_58	1.0118	0.0011	0.0087	0.0088	209.418	NA
209	233st003case_61	1.0066	0.0011	0.0087	0.0088	211.700	NA
210	233st003case_62	1.0033	0.0010	0.0087	0.0088	213.014	NA
211	233st003case_65	1.0022	0.0010	0.0087	0.0088	216.508	NA
212	233st015_case_1	0.9908	0.0011	0.0075	0.0076	175.184	NA
213	233st015_case_2	0.9857	0.0011	0.0070	0.0071	173.488	NA
214	233st015_case_3	0.9879	0.0011	0.0068	0.0069	181.085	NA
215	233st015_case_4	0.9879	0.0011	0.0041	0.0042	181.085	NA
216	233st015_case_5	0.9850	0.0012	0.0055	0.0056	172.110	NA
217	233st015_case_6	0.9725	0.0011	0.0099	0.0100	171.621	NA
218	233st015_case_7	0.9833	0.0011	0.0070	0.0071	179.940	NA
219	233st015_case_8	0.9714	0.0011	0.0067	0.0068	171.274	NA
220	233st015_case_9	0.9654	0.0011	0.0050	0.0051	171.006	NA
221	233st015_case_10	0.9848	0.0013	0.0051	0.0053	174.998	NA
222	233st015_case_11	0.9930	0.0012	0.0075	0.0076	181.573	NA
223	233st015_case_12	0.9940	0.0012	0.0069	0.0070	180.251	NA
224	233st015_case_13	0.9886	0.0012	0.0069	0.0070	179.462	NA
225	233st015_case_14	0.9954	0.0011	0.0036	0.0038	187.100	NA
226	233st015_case_15	0.9862	0.0011	0.0060	0.0061	178.849	NA
227	233st015_case_16	0.9854	0.0012	0.0043	0.0045	178.537	NA
228	233st015_case_17	0.9896	0.0013	0.0029	0.0032	186.127	NA
229	233st015_case_18	0.9718	0.0012	0.0056	0.0057	178.030	NA
230	233st015_case_19	0.9694	0.0012	0.0052	0.0053	177.852	NA
231	233st015_case_20	0.9920	0.0011	0.0079	0.0080	193.394	NA
232	233st015_case_21	0.9947	0.0011	0.0070	0.0071	192.209	NA
233	233st015_case_22	0.9924	0.0011	0.0062	0.0063	191.601	NA

No.	Case Name	k_{eff}	σ_{KENO}	σ_{BENCH}	σ_{TOTAL}	AEG	H/Pu
234	233st015_case_23	0.9931	0.0011	0.0055	0.0056	191.115	NA
235	233st015_case_24	0.9870	0.0012	0.0051	0.0052	190.756	NA
236	233st015_case_25	0.9946	0.0010	0.0023	0.0025	196.906	NA
237	233st015_case_26	0.9907	0.0011	0.0066	0.0067	204.058	NA
238	233st015_case_27	0.9956	0.0010	0.0063	0.0064	203.644	NA
239	233st015_case_28	0.9925	0.0010	0.0058	0.0059	203.384	NA
240	233st015_case_29	0.9911	0.0011	0.0051	0.0052	203.169	NA
241	233st015_case_30	0.9900	0.0010	0.0048	0.0049	203.045	NA
242	233st015_case_31	0.9901	0.0011	0.0055	0.0056	202.981	NA
243	lct_010_c01	1.0054	0.0007	0.0021	0.0022	206.871	NA
244	lct_010_c02	1.0041	0.0007	0.0021	0.0022	207.161	NA
245	lct_010_c03	1.0034	0.0008	0.0021	0.0022	207.391	NA
246	lct_010_c04	0.9929	0.0008	0.0021	0.0022	207.749	NA
247	lct_010_c20	0.9993	0.0007	0.0028	0.0029	195.435	NA
248	lct_010_c21	0.9999	0.0008	0.0028	0.0029	195.732	NA
249	lct_010_c22	0.9980	0.0008	0.0028	0.0029	196.316	NA
250	lct_010_c23	0.9956	0.0008	0.0028	0.0029	196.653	NA

Table 9-3 – Calculation of USL

Benchmark Set	Case	Number of Cases	USLSTATS Filename	USL vs. AEG	USL vs. H/Pu
U-233 without Be	197-211	15	AEG1	0.9273	NA
U-233 with Be	212-242	31	AEG2	0.9292(1)	NA
Pu	1-196	196	AEG3/HX	0.9394	0.9392
Pu + U-233 with Be	1-196, 212-242	227	AEG4	0.9377(2)	NA
Pu + U-233 with Be + LEU with steel/lead	1-196, 212-250	235	AEG5	0.9378	NA

(1) Calculated at maximum AEG of the set (204.06). USL increases with AEG such that this is conservative for the AEG of the HalfPACT calculations (approximately 214 to 219).
(2) Range of applicability is $198.11 \leq AEG \leq 219.83$

10.0 Appendix

10.1 References

1. *HalfPACT Safety Analysis Report*, Rev. 4, May 2005.
2. U.S. Department of Energy (DOE), *Contact-Handled Transuranic Waste Authorized Methods for Payload Control(CH-TRAMPAC)*, U.S. Department of Energy, Carlsbad Field Office, Carlsbad, New Mexico.
3. Neeley, G. W., D. L. Newell, S. L. Larson, and R. J. Green, *Reactivity Effects of Moderator and Reflector Materials on a Finite Plutonium System*, SAIC-1322-001, Revision 1, Science Applications International Corporation, Oak Ridge, Tennessee, May 2004.
4. WP 08-PT.09, *Test Plan to Determine the TRU Waste Polyethylene Packing Fraction*, Washington TRU Solutions, LLC., Revision 0, June 2003.
5. *SCALE: A Modular Code System for Performing Standardized Computer Analyses for Licensing Evaluation*, ORNL/TM-2005/39, Version 5, Vols. I-III, April 2005.
6. *SCALE5 Verification Test Report – Windows XP,* TR-VV-05-002, Rev. 2, Packaging Technology, Inc., May 2007.
7. USLSTATS, "*USLSTATS: A Utility To Calculate Upper Subcritical Limits For Criticality Safety Applications,"* Version 1.4.2, Oak Ridge National Laboratory, April 23, 2003. Note: USLSTATS is described in Appendix C, *User's Manual for USLSTATS V1.0*, in NUREG/CR-6361 *Criticality Benchmark Guide for Light-Water-Reactor Fuel in Transportation and Storage Packages*, March 1997. No new user's manual has been developed for later updates to the program.
8. Drawing 163-008, Rev. 0, *Shielded Container SAR Drawing*.
9. *International Handbook of Evaluated Criticality Safety Benchmark Experiments*, Nuclear Energy Agency, NEA/NSC/DOC(95)03, September 2006.
10. Standard Composition Library, ORNL/TM-2005/39, Version 5, Vol. III, Section M8, April 2005.
11. Title 10, Code of Federal Regulations, Part 71 (10 CFR 71), *Packaging and Transportation of Radioactive Material*.

10.2 Sample Models

Sample models are provided for the most reactive HAC single package and array cases.

HAC Single Package Model F5 (hs_insc_up, H/Pu = 900)

```
=csas25
HAC single        H/X=  900
238groupndf5 infhommedium
arbmpuhp    1.0087      4 0 0 1     1001  11.577      6012  19.557
      8016  65.815      94239 3.051 1 1.0 293 end
h2o   2 den=0.9982 0.74 293 end
poly(h2o)   2 den=0.9230 0.25 293 end
bebound     2 den=1.85 0.01 293 end
ss304 3 1.00 293 end
carbonsteel 4 1.00 293 end
pb    5 1.00 293 end
h2o   6 den=0.9982 1.00 293 end
end comp
dummy
read param nsk=50 gen=850 end param
read geom
global unit 1
sphere      1 1   13.6105     origin      12.2900     0     24.1620
cylinder    2 1   25.9105     2p37.7825
cylinder    4 1   26.3652     2p37.7825
cylinder    5 1   28.9052     2p37.7825
cylinder    4 1   29.21 2p45.4025
cylinder    2 1   97.0756     2p57.0706
hole  2     58.4300     0     0
hole  2     -58.4300    0     0
cylinder    3 1   98.1869     2p58.3406
cylinder    2 1   110.8869    2p71.0406
cylinder    3 1   111.5219    2p71.6756
cuboid      6 1   4p141.5219  2p101.6756
unit 2
cylinder    2 1   25.9105     2p37.7825
cylinder    4 1   26.3652     2p37.7825
cylinder    5 1   28.9052     2p37.7825
cylinder    4 1   29.21 2p45.4025
end geom
end data
end
```

HAC Array Model T5 (ha_insc_up2x, H/Pu = 900)

```
=csas25
HAC array         H/X=  900
238groupndf5 infhommedium
arbmpuhp    1.0087      4 0 0 1     1001  11.577      6012  19.557
      8016  65.815      94239 3.051 1 1.0 293 end
h2o   2 den=0.9982 0.74 293 end
poly(h2o)   2 den=0.9230 0.25 293 end
bebound     2 den=1.85 0.01 293 end
ss304 3 1.00 293 end
carbonsteel 4 1.00 293 end
pb    5 1.00 293 end
h2o   6 den=0.9982 1.00 293 end
end comp
dummy
```

```
read param nsk=50 gen=850 end param
read geom
global unit 1
sphere      1 1   13.6105     origin      80.1456     0     35.8301
cylinder    2 1   25.9105     49.4506     -26.1144    origin 67.8556 0
cylinder    4 1   26.3652     49.4506     -26.1144    origin 67.8556 0
cylinder    5 1   28.9052     49.4506     -26.1144    origin 67.8556 0
cylinder    4 1   29.21 57.0706     -33.7344    origin 67.8556 0
cylinder    2 1   97.0756     2p57.0706
cylinder    3 1   98.1869     2p58.3406
cylinder    0 1   110.8869    2p71.0406
cylinder    3 1   111.5219    2p71.6756
cuboid      0 1   4p111.5219  2p71.6756
end geom
read bounds all=mirror end bounds
end data
end
```

10.3 Computer Run Record

	COMPUTER RUN RECORD
Computer Run Number	See Input File Names
Analysis Software	SCALE5
Hardware Description	Windows XP/Xeon Processor QA verification for SCALE5 has been performed for this hardware platform [6]. Models were executed on computer ADANC491TC.
Disk Storage Description	Compact Disc

NCT Single Package Cases

```
10/25/2007  03:45 PM          10,864 ns245_insc_up.in
10/25/2007  04:40 PM       3,947,023 ns245_insc_up.out
10/18/2007  10:30 AM          12,224 ns_insc_up.in
10/18/2007  10:50 AM       4,778,714 ns_insc_up.out
```

NCT Array Cases

```
10/25/2007  03:36 PM          11,215 na245_insc_up.in
10/25/2007  04:08 PM       3,949,275 na245_insc_up.out
10/25/2007  03:34 PM          10,234 na245_insc_up2x.in
10/25/2007  04:23 PM       3,927,982 na245_insc_up2x.out
10/25/2007  03:20 PM          10,234 na245_insc_up2xp.in
10/25/2007  03:36 PM       3,929,726 na245_insc_up2xp.out
10/18/2007  11:23 AM          12,664 na_insc_up.in
10/18/2007  11:43 AM       4,780,589 na_insc_up.out
10/18/2007  10:44 AM          11,455 na_insc_up2x.in
10/18/2007  11:03 AM       4,756,585 na_insc_up2x.out
```

HAC Single Package Cases

```
10/25/2007  02:28 PM          10,675 hs245_insc.in
10/25/2007  02:47 PM       3,948,781 hs245_insc.out
10/25/2007  02:22 PM          10,864 hs245_insc_up.in
10/25/2007  02:39 PM       3,947,740 hs245_insc_up.out
```

```
10/09/2007  08:57 AM            10,532 hs_center.in
10/09/2007  09:21 AM         4,759,792 hs_center.out
10/09/2007  09:26 AM            11,994 hs_insc.in
10/09/2007  09:48 AM         4,780,840 hs_insc.out
10/09/2007  11:24 AM            12,158 hs_insc_side.in
10/09/2007  11:45 AM         4,778,181 hs_insc_side.out
10/09/2007  10:18 AM            12,224 hs_insc_up.in
10/09/2007  10:38 AM         4,778,327 hs_insc_up.out
10/09/2007  12:09 PM            12,620 hs_insc_up2.in
10/09/2007  12:28 PM         4,778,969 hs_insc_up2.out
10/09/2007  09:04 AM             8,309 hs_nosc.in
10/09/2007  09:26 AM         4,732,351 hs_nosc.out
```

HAC Array Cases

```
10/25/2007  03:47 PM            11,215 ha245_insc_up.in
10/25/2007  04:04 PM         3,949,165 ha245_insc_up.out
10/25/2007  01:03 PM            10,234 ha245_insc_up2x.in
10/25/2007  01:18 PM         3,929,608 ha245_insc_up2x.out
10/25/2007  12:53 PM            10,234 ha245_insc_up2xp.in
10/25/2007  01:08 PM         3,928,056 ha245_insc_up2xp.out
10/25/2007  01:38 PM            10,259 ha245_insc_up2xp_intv.in
10/25/2007  01:53 PM         3,929,942 ha245_insc_up2xp_intv.out
10/15/2007  03:55 PM            12,522 ha_insc.in
10/15/2007  04:17 PM         4,782,205 ha_insc.out
10/09/2007  01:43 PM            12,664 ha_insc_up.in
10/09/2007  02:02 PM         4,780,147 ha_insc_up.out
10/15/2007  04:41 PM            13,049 ha_insc_up2.in
10/15/2007  05:00 PM         4,780,043 ha_insc_up2.out
10/16/2007  08:30 AM            11,455 ha_insc_up2x.in
10/16/2007  08:49 AM         4,757,832 ha_insc_up2x.out
10/17/2007  02:37 PM            11,456 ha_insc_up2xr.in
10/17/2007  02:57 PM         4,756,436 ha_insc_up2xr.out
10/18/2007  09:40 AM             8,380 ha_insc_up2xr_intv.in
10/18/2007  10:06 AM         3,462,686 ha_insc_up2xr_intv.out
10/18/2007  09:44 AM             8,378 ha_insc_up2xr_intv2.in
10/18/2007  09:57 AM         3,460,765 ha_insc_up2xr_intv2.out
10/16/2007  09:06 AM            11,697 ha_insc_up2xy.in
10/16/2007  09:24 AM         4,755,695 ha_insc_up2xy.out
10/16/2007  10:18 AM             8,332 ha_insc_up2x_void.in
10/16/2007  10:34 AM         3,457,908 ha_insc_up2x_void.out
10/17/2007  01:58 PM             9,036 ha_nosc.in
10/17/2007  02:20 PM         4,732,214 ha_nosc.out
10/17/2007  02:25 PM             9,035 ha_nosc_upxy.in
10/17/2007  02:44 PM         4,733,093 ha_nosc_upxy.out
10/16/2007  11:38 AM             9,266 ha_nosc_x.in
10/16/2007  11:57 AM         4,734,228 ha_nosc_x.out
10/16/2007  10:55 AM            11,310 ha_osc_x.in
10/16/2007  11:15 AM         4,758,724 ha_osc_x.out
```

Benchmarks

```
04/08/2003  05:07 AM               598 233st001case_1.inp
09/24/2007  03:48 PM           501,164 233st001case_1.out
04/08/2003  05:07 AM               652 233st001case_2.inp
09/24/2007  03:51 PM           504,264 233st001case_2.out
06/21/2003  09:10 AM               636 233st001case_3.inp
09/24/2007  03:53 PM           503,683 233st001case_3.out
04/08/2003  05:08 AM               653 233st001case_4.inp
09/24/2007  03:55 PM           505,750 233st001case_4.out
04/08/2003  05:08 AM               653 233st001case_5.inp
09/24/2007  03:57 PM           504,165 233st001case_5.out
```

```
04/08/2003  02:19 PM              836 233st003CASE_40.inp
09/24/2007  03:59 PM          494,416 233st003CASE_40.out
04/08/2003  02:19 PM            1,067 233st003CASE_41.inp
09/24/2007  04:01 PM          548,848 233st003CASE_41.out
04/08/2003  02:19 PM              959 233st003CASE_42.inp
09/24/2007  04:03 PM          543,899 233st003CASE_42.out
04/08/2003  02:20 PM            1,038 233st003CASE_45.inp
09/24/2007  04:04 PM          548,180 233st003CASE_45.out
04/08/2003  02:20 PM            1,077 233st003CASE_55.inp
09/24/2007  04:06 PM          550,064 233st003CASE_55.out
04/08/2003  02:20 PM              960 233st003CASE_57.inp
09/24/2007  04:08 PM          544,151 233st003CASE_57.out
04/08/2003  02:20 PM              976 233st003CASE_58.inp
09/24/2007  04:10 PM          543,638 233st003CASE_58.out
04/08/2003  02:20 PM              946 233st003CASE_61.inp
09/24/2007  04:12 PM          544,060 233st003CASE_61.out
04/08/2003  02:20 PM              934 233st003CASE_62.inp
09/24/2007  04:14 PM          543,790 233st003CASE_62.out
04/08/2003  02:21 PM              944 233st003CASE_65.inp
09/24/2007  04:17 PM          543,662 233st003CASE_65.out
06/20/2003  02:37 PM              616 233st015_case_1.inp
09/24/2007  04:17 PM          496,585 233st015_case_1.out
06/20/2003  02:44 PM              626 233st015_case_10.inp
09/24/2007  04:18 PM          497,952 233st015_case_10.out
06/20/2003  02:54 PM              620 233st015_case_11.inp
09/24/2007  04:18 PM          497,339 233st015_case_11.out
06/20/2003  02:54 PM              620 233st015_case_12.inp
09/24/2007  04:18 PM          497,489 233st015_case_12.out
06/20/2003  02:54 PM              620 233st015_case_13.inp
09/24/2007  04:19 PM          498,087 233st015_case_13.out
06/20/2003  02:54 PM              642 233st015_case_14.inp
09/24/2007  04:20 PM          497,561 233st015_case_14.out
06/20/2003  02:54 PM              620 233st015_case_15.inp
09/24/2007  04:20 PM          497,981 233st015_case_15.out
06/20/2003  02:54 PM              623 233st015_case_16.inp
09/24/2007  04:20 PM          497,377 233st015_case_16.out
06/20/2003  02:54 PM              623 233st015_case_17.inp
09/24/2007  04:21 PM          497,636 233st015_case_17.out
06/20/2003  02:47 PM              616 233st015_case_18.inp
09/24/2007  04:21 PM          497,741 233st015_case_18.out
06/20/2003  02:54 PM              623 233st015_case_19.inp
09/24/2007  04:22 PM          497,823 233st015_case_19.out
06/20/2003  02:39 PM              620 233st015_case_2.inp
09/24/2007  04:22 PM          496,819 233st015_case_2.out
06/20/2003  02:53 PM              620 233st015_case_20.inp
09/24/2007  04:23 PM          496,965 233st015_case_20.out
06/20/2003  02:53 PM              620 233st015_case_21.inp
09/24/2007  04:23 PM          497,749 233st015_case_21.out
06/20/2003  02:53 PM              620 233st015_case_22.inp
09/24/2007  04:24 PM          496,691 233st015_case_22.out
06/20/2003  02:54 PM              620 233st015_case_23.inp
09/24/2007  04:24 PM          497,430 233st015_case_23.out
06/20/2003  02:53 PM              623 233st015_case_24.inp
09/24/2007  04:24 PM          497,065 233st015_case_24.out
06/20/2003  02:53 PM              627 233st015_case_25.inp
09/24/2007  04:25 PM          497,372 233st015_case_25.out
06/20/2003  02:50 PM              620 233st015_case_26.inp
09/24/2007  04:26 PM          497,280 233st015_case_26.out
06/20/2003  02:51 PM              618 233st015_case_27.inp
09/24/2007  04:26 PM          497,464 233st015_case_27.out
```

```
06/20/2003  02:51 PM              623 233st015_case_28.inp
09/24/2007  04:27 PM          498,309 233st015_case_28.out
06/20/2003  02:51 PM              623 233st015_case_29.inp
09/24/2007  04:28 PM          497,079 233st015_case_29.out
06/20/2003  02:39 PM              640 233st015_case_3.inp
09/24/2007  04:28 PM          499,041 233st015_case_3.out
06/20/2003  02:52 PM              623 233st015_case_30.inp
09/24/2007  04:29 PM          497,621 233st015_case_30.out
06/20/2003  02:54 PM              623 233st015_case_31.inp
09/24/2007  04:29 PM          497,328 233st015_case_31.out
06/20/2003  02:42 PM              642 233st015_case_4.inp
09/24/2007  04:30 PM          499,041 233st015_case_4.out
06/20/2003  02:43 PM              620 233st015_case_5.inp
09/24/2007  04:30 PM          498,808 233st015_case_5.out
06/20/2003  02:43 PM              623 233st015_case_6.inp
09/24/2007  04:31 PM          498,648 233st015_case_6.out
06/20/2003  02:43 PM              624 233st015_case_7.inp
09/24/2007  04:31 PM          496,864 233st015_case_7.out
06/20/2003  02:44 PM              623 233st015_case_8.inp
09/24/2007  04:31 PM          497,181 233st015_case_8.out
06/20/2003  02:44 PM              623 233st015_case_9.inp
09/24/2007  04:32 PM          497,901 233st015_case_9.out
10/08/2007  11:44 AM            2,086 lct_010_c01.in
10/08/2007  11:46 AM          655,349 lct_010_c01.out
10/08/2007  11:47 AM            2,130 lct_010_c02.in
10/08/2007  11:49 AM          656,441 lct_010_c02.out
10/08/2007  11:47 AM            2,131 lct_010_c03.in
10/08/2007  11:51 AM          655,653 lct_010_c03.out
10/08/2007  11:47 AM            2,131 lct_010_c04.in
10/08/2007  11:53 AM          656,045 lct_010_c04.out
10/08/2007  11:47 AM            2,087 lct_010_c20.in
10/08/2007  11:55 AM          655,951 lct_010_c20.out
10/08/2007  11:48 AM            2,131 lct_010_c21.in
10/08/2007  11:58 AM          655,952 lct_010_c21.out
10/08/2007  11:48 AM            2,133 lct_010_c22.in
10/08/2007  12:00 PM          656,374 lct_010_c22.out
10/08/2007  11:48 AM            2,133 lct_010_c23.in
10/08/2007  12:02 PM          655,853 lct_010_c23.out
04/08/2003  02:22 PM              994 pust001_case_1.inp
09/24/2007  04:33 PM          611,738 pust001_case_1.out
04/08/2003  02:22 PM              993 pust001_case_2.inp
09/24/2007  04:35 PM          611,476 pust001_case_2.out
04/08/2003  02:23 PM              995 pust001_case_3.inp
09/24/2007  04:37 PM          612,479 pust001_case_3.out
04/08/2003  02:23 PM              994 pust001_case_4.inp
09/24/2007  04:38 PM          610,793 pust001_case_4.out
04/08/2003  02:23 PM              994 pust001_case_5.inp
09/24/2007  04:40 PM          611,066 pust001_case_5.out
04/08/2003  02:23 PM            1,000 pust001_case_6.inp
09/24/2007  04:41 PM          611,874 pust001_case_6.out
04/08/2003  02:24 PM              899 pust002_case_1.inp
09/24/2007  04:43 PM          586,390 pust002_case_1.out
04/08/2003  02:24 PM              899 pust002_case_2.inp
09/24/2007  04:45 PM          585,931 pust002_case_2.out
04/08/2003  02:24 PM              899 pust002_case_3.inp
09/24/2007  04:46 PM          587,596 pust002_case_3.out
04/08/2003  02:24 PM              899 pust002_case_4.inp
09/24/2007  04:48 PM          586,021 pust002_case_4.out
04/08/2003  02:25 PM              905 pust002_case_5.inp
09/24/2007  04:50 PM          587,178 pust002_case_5.out
```

```
04/08/2003  02:25 PM              905 pust002_case_6.inp
09/24/2007  04:51 PM          586,829 pust002_case_6.out
04/08/2003  02:25 PM              899 pust002_case_7.inp
09/24/2007  04:53 PM          585,920 pust002_case_7.out
04/09/2003  03:11 PM            1,063 pust003_case_1.inp
09/24/2007  04:55 PM          600,013 pust003_case_1.out
04/09/2003  03:11 PM            1,063 pust003_case_2.inp
09/24/2007  04:57 PM          599,582 pust003_case_2.out
04/09/2003  03:11 PM            1,063 pust003_case_3.inp
09/24/2007  04:58 PM          600,275 pust003_case_3.out
04/09/2003  03:11 PM            1,063 pust003_case_4.inp
09/24/2007  05:00 PM          599,516 pust003_case_4.out
04/09/2003  03:11 PM            1,063 pust003_case_5.inp
09/24/2007  05:02 PM          600,311 pust003_case_5.out
04/09/2003  03:11 PM            1,063 pust003_case_6.inp
09/24/2007  05:04 PM          600,150 pust003_case_6.out
04/09/2003  03:11 PM            1,063 pust003_case_7.inp
09/24/2007  05:06 PM          600,127 pust003_case_7.out
04/09/2003  03:11 PM            1,063 pust003_case_8.inp
09/24/2007  05:08 PM          599,440 pust003_case_8.out
04/09/2003  03:13 PM              909 pust004_case_1.inp
09/24/2007  05:10 PM          585,946 pust004_case_1.out
04/09/2003  03:13 PM              907 pust004_case_10.inp
09/24/2007  05:12 PM          586,696 pust004_case_10.out
04/09/2003  03:13 PM              907 pust004_case_11.inp
09/24/2007  05:13 PM          586,873 pust004_case_11.out
04/09/2003  03:13 PM              908 pust004_case_12.inp
09/24/2007  05:15 PM          586,390 pust004_case_12.out
04/09/2003  03:13 PM              908 pust004_case_13.inp
09/24/2007  05:17 PM          586,432 pust004_case_13.out
04/09/2003  03:13 PM              906 pust004_case_2.inp
09/24/2007  05:19 PM          586,578 pust004_case_2.out
04/09/2003  03:13 PM              905 pust004_case_3.inp
09/24/2007  05:21 PM          586,601 pust004_case_3.out
04/09/2003  03:14 PM              902 pust004_case_4.inp
09/24/2007  05:23 PM          586,833 pust004_case_4.out
04/09/2003  03:14 PM              905 pust004_case_5.inp
09/24/2007  05:25 PM          587,645 pust004_case_5.out
04/09/2003  03:14 PM              905 pust004_case_6.inp
09/24/2007  05:27 PM          586,934 pust004_case_6.out
04/09/2003  03:14 PM              905 pust004_case_7.inp
09/24/2007  05:29 PM          587,217 pust004_case_7.out
04/09/2003  03:14 PM              905 pust004_case_8.inp
09/24/2007  05:31 PM          586,520 pust004_case_8.out
04/09/2003  03:14 PM              905 pust004_case_9.inp
09/24/2007  05:33 PM          586,850 pust004_case_9.out
04/17/2003  03:27 PM              900 pust005_case_1.inp
09/24/2007  05:35 PM          587,025 pust005_case_1.out
04/17/2003  03:27 PM              902 pust005_case_2.inp
09/24/2007  05:37 PM          586,602 pust005_case_2.out
04/17/2003  03:27 PM              898 pust005_case_3.inp
09/24/2007  05:38 PM          586,100 pust005_case_3.out
04/17/2003  03:27 PM              901 pust005_case_4.inp
09/24/2007  05:40 PM          586,721 pust005_case_4.out
04/17/2003  03:27 PM              898 pust005_case_5.inp
09/24/2007  05:42 PM          586,188 pust005_case_5.out
04/17/2003  03:27 PM              898 pust005_case_6.inp
09/24/2007  05:44 PM          585,683 pust005_case_6.out
04/17/2003  03:27 PM              899 pust005_case_7.inp
09/24/2007  05:46 PM          586,036 pust005_case_7.out
```

```
04/17/2003  03:27 PM              899 pust005_case_8.inp
09/24/2007  05:47 PM          585,838 pust005_case_8.out
04/17/2003  03:27 PM              899 pust005_case_9.inp
09/24/2007  05:49 PM          586,487 pust005_case_9.out
06/21/2003  11:08 AM            1,000 pust006_case_1.inp
09/24/2007  05:51 PM          490,291 pust006_case_1.out
06/21/2003  11:08 AM              980 pust006_case_2.inp
09/24/2007  05:53 PM          491,207 pust006_case_2.out
06/21/2003  11:08 AM              960 pust006_case_3.inp
09/24/2007  05:55 PM          491,697 pust006_case_3.out
04/17/2003  03:31 PM            1,348 pust007_case_10.inp
09/24/2007  05:57 PM          659,406 pust007_case_10.out
04/17/2003  03:31 PM            1,349 pust007_case_2.inp
09/24/2007  05:58 PM          659,899 pust007_case_2.out
04/17/2003  03:31 PM            1,349 pust007_case_3.inp
09/24/2007  06:00 PM          659,082 pust007_case_3.out
04/17/2003  03:31 PM            1,348 pust007_case_5.inp
09/24/2007  06:01 PM          658,974 pust007_case_5.out
04/17/2003  03:30 PM            1,348 pust007_case_6.inp
09/24/2007  06:03 PM          659,289 pust007_case_6.out
04/17/2003  03:31 PM            1,348 pust007_case_7.inp
09/24/2007  06:05 PM          659,743 pust007_case_7.out
04/17/2003  03:31 PM            1,348 pust007_case_8.inp
09/24/2007  06:06 PM          658,914 pust007_case_8.out
04/17/2003  03:31 PM            1,348 pust007_case_9.inp
09/24/2007  06:08 PM          659,255 pust007_case_9.out
04/18/2003  06:36 AM            1,695 pust009_case_1.inp
09/24/2007  06:11 PM          714,017 pust009_case_1.out
04/18/2003  06:37 AM            1,696 pust009_case_2.inp
09/24/2007  06:13 PM          716,127 pust009_case_2.out
04/18/2003  06:37 AM            1,493 pust009_case_3.inp
09/24/2007  06:16 PM          692,200 pust009_case_3.out
09/25/2007  09:07 AM            1,643 pust010_case_1.11.inp
09/25/2007  09:24 AM          514,920 pust010_case_1.11.out
09/25/2007  09:07 AM            1,669 pust010_case_1.12.inp
09/25/2007  09:26 AM          496,180 pust010_case_1.12.out
09/25/2007  08:58 AM            1,629 pust010_case_1.9.inp
09/25/2007  09:28 AM          514,534 pust010_case_1.9.out
09/25/2007  09:19 AM            1,644 pust010_case_2.11.inp
09/25/2007  09:30 AM          514,555 pust010_case_2.11.out
09/25/2007  09:19 AM            1,643 pust010_case_2.12.inp
09/25/2007  09:32 AM          515,689 pust010_case_2.12.out
09/25/2007  10:04 AM            1,632 pust010_case_2.9.inp
09/25/2007  10:06 AM          515,687 pust010_case_2.9.out
09/25/2007  09:20 AM            1,615 pust010_case_3.11.inp
09/25/2007  09:33 AM          515,412 pust010_case_3.11.out
09/25/2007  09:20 AM            1,660 pust010_case_3.12.inp
09/25/2007  09:35 AM          495,164 pust010_case_3.12.out
09/25/2007  09:19 AM            1,640 pust010_case_3.9.inp
09/25/2007  09:37 AM          515,521 pust010_case_3.9.out
09/25/2007  09:20 AM            1,639 pust010_case_4.11.inp
09/25/2007  09:39 AM          513,702 pust010_case_4.11.out
09/25/2007  09:20 AM            1,591 pust010_case_4.12.inp
09/25/2007  09:41 AM          496,593 pust010_case_4.12.out
09/25/2007  09:20 AM            1,642 pust010_case_5.11.inp
09/25/2007  09:43 AM          515,874 pust010_case_5.11.out
09/25/2007  09:20 AM            1,645 pust010_case_6.11.inp
09/25/2007  09:45 AM          514,887 pust010_case_6.11.out
09/25/2007  09:20 AM            1,643 pust010_case_7.11.inp
09/25/2007  09:47 AM          515,466 pust010_case_7.11.out
```

```
09/25/2007  09:20 AM              829 pust011_case_1.16.inp
09/25/2007  09:47 AM          486,988 pust011_case_1.16.out
09/25/2007  09:20 AM              962 pust011_case_1.18.inp
09/25/2007  09:49 AM          490,122 pust011_case_1.18.out
09/25/2007  09:20 AM              829 pust011_case_2.16.inp
09/25/2007  09:49 AM          487,292 pust011_case_2.16.out
09/25/2007  09:21 AM              961 pust011_case_2.18.inp
09/25/2007  09:51 AM          489,647 pust011_case_2.18.out
09/25/2007  09:21 AM              829 pust011_case_3.16.inp
09/25/2007  09:51 AM          487,490 pust011_case_3.16.out
09/25/2007  09:21 AM              963 pust011_case_3.18.inp
09/25/2007  09:53 AM          490,405 pust011_case_3.18.out
09/25/2007  09:21 AM              830 pust011_case_4.16.inp
09/25/2007  09:53 AM          487,811 pust011_case_4.16.out
09/25/2007  09:21 AM              960 pust011_case_4.18.inp
09/25/2007  09:54 AM          489,128 pust011_case_4.18.out
09/25/2007  09:21 AM              830 pust011_case_5.16.inp
09/25/2007  09:55 AM          487,069 pust011_case_5.16.out
09/25/2007  09:21 AM              960 pust011_case_5.18.inp
09/25/2007  09:56 AM          489,720 pust011_case_5.18.out
09/25/2007  09:21 AM              960 pust011_case_6.18.inp
09/25/2007  09:57 AM          488,493 pust011_case_6.18.out
09/25/2007  09:21 AM              961 pust011_case_7.18.inp
09/25/2007  09:58 AM          489,154 pust011_case_7.18.out
06/20/2003  02:12 PM            2,989 pust014_case_1.inp
09/24/2007  06:17 PM          564,823 pust014_case_1.out
06/20/2003  02:11 PM            2,952 pust014_case_10.inp
09/24/2007  06:19 PM          564,850 pust014_case_10.out
06/20/2003  02:11 PM            2,953 pust014_case_11.inp
09/24/2007  06:20 PM          565,185 pust014_case_11.out
06/20/2003  02:11 PM            2,956 pust014_case_12.inp
09/24/2007  06:21 PM          565,480 pust014_case_12.out
06/20/2003  02:11 PM            2,966 pust014_case_13.inp
09/24/2007  06:22 PM          565,260 pust014_case_13.out
06/20/2003  02:11 PM            2,960 pust014_case_14.inp
09/24/2007  06:23 PM          565,086 pust014_case_14.out
06/20/2003  02:11 PM            2,961 pust014_case_15.inp
09/24/2007  06:25 PM          565,660 pust014_case_15.out
06/20/2003  02:12 PM            2,961 pust014_case_16.inp
09/24/2007  06:26 PM          565,270 pust014_case_16.out
06/20/2003  02:12 PM            2,964 pust014_case_17.inp
09/24/2007  06:27 PM          565,377 pust014_case_17.out
06/20/2003  02:11 PM            3,011 pust014_case_18.inp
09/24/2007  06:28 PM          565,251 pust014_case_18.out
06/20/2003  02:11 PM            3,001 pust014_case_19.inp
09/24/2007  06:29 PM          565,935 pust014_case_19.out
06/20/2003  02:12 PM            3,000 pust014_case_20.inp
09/24/2007  06:31 PM          565,795 pust014_case_20.out
06/20/2003  02:13 PM            3,002 pust014_case_21.inp
09/24/2007  06:32 PM          565,812 pust014_case_21.out
06/20/2003  02:13 PM            3,004 pust014_case_22.inp
09/24/2007  06:33 PM          565,249 pust014_case_22.out
06/20/2003  02:12 PM            3,006 pust014_case_23.inp
09/24/2007  06:34 PM          564,412 pust014_case_23.out
06/20/2003  02:12 PM            3,108 pust014_case_24.inp
09/24/2007  06:35 PM          565,862 pust014_case_24.out
04/08/2003  05:06 AM            3,121 pust014_case_25.inp
09/24/2007  06:37 PM          565,523 pust014_case_25.out
06/20/2003  02:19 PM            3,089 pust014_case_26.inp
09/24/2007  06:38 PM          564,974 pust014_case_26.out
```

```
06/20/2003  02:19 PM            3,089 pust014_case_27.inp
09/24/2007  06:39 PM          565,476 pust014_case_27.out
06/20/2003  02:19 PM            3,091 pust014_case_28.inp
09/24/2007  06:40 PM          566,041 pust014_case_28.out
06/20/2003  02:19 PM            3,093 pust014_case_29.inp
09/24/2007  06:41 PM          564,932 pust014_case_29.out
06/20/2003  02:19 PM            2,981 pust014_case_3.inp
09/24/2007  06:42 PM          564,953 pust014_case_3.out
06/20/2003  02:19 PM            3,144 pust014_case_30.inp
09/24/2007  06:44 PM          565,285 pust014_case_30.out
06/20/2003  02:19 PM            3,132 pust014_case_31.inp
09/24/2007  06:45 PM          564,504 pust014_case_31.out
06/20/2003  02:19 PM            3,098 pust014_case_33.inp
09/24/2007  06:46 PM          565,174 pust014_case_33.out
06/20/2003  02:19 PM            3,098 pust014_case_34.inp
09/24/2007  06:47 PM          565,326 pust014_case_34.out
06/20/2003  02:19 PM            3,013 pust014_case_4.inp
09/24/2007  06:48 PM          565,381 pust014_case_4.out
06/20/2003  02:19 PM            2,981 pust014_case_5.inp
09/24/2007  06:50 PM          565,065 pust014_case_5.out
06/20/2003  02:19 PM            2,982 pust014_case_6.inp
09/24/2007  06:51 PM          565,310 pust014_case_6.out
06/20/2003  02:18 PM            2,979 pust014_case_7.inp
09/24/2007  06:52 PM          564,489 pust014_case_7.out
06/20/2003  02:19 PM            2,951 pust014_case_8.inp
09/24/2007  06:53 PM          565,265 pust014_case_8.out
06/20/2003  02:20 PM            2,952 pust014_case_9.inp
09/24/2007  06:54 PM          564,610 pust014_case_9.out
06/20/2003  02:23 PM            3,061 pust015_case_1.inp
09/24/2007  06:56 PM          564,848 pust015_case_1.out
06/20/2003  02:23 PM            3,168 pust015_case_10.inp
09/24/2007  06:57 PM          564,116 pust015_case_10.out
06/20/2003  02:23 PM            3,177 pust015_case_11.inp
09/24/2007  06:58 PM          565,210 pust015_case_11.out
06/20/2003  02:23 PM            3,159 pust015_case_12.inp
09/24/2007  06:59 PM          564,412 pust015_case_12.out
06/20/2003  02:23 PM            3,162 pust015_case_13.inp
09/24/2007  07:00 PM          565,838 pust015_case_13.out
06/20/2003  02:23 PM            3,162 pust015_case_14.inp
09/24/2007  07:02 PM          565,172 pust015_case_14.out
06/20/2003  02:23 PM            3,174 pust015_case_15.inp
09/24/2007  07:03 PM          565,197 pust015_case_15.out
06/20/2003  02:23 PM            3,150 pust015_case_16.inp
09/24/2007  07:04 PM          564,972 pust015_case_16.out
06/20/2003  02:24 PM            3,153 pust015_case_17.inp
09/24/2007  07:05 PM          565,540 pust015_case_17.out
06/20/2003  02:23 PM            3,060 pust015_case_2.inp
09/24/2007  07:06 PM          564,185 pust015_case_2.out
06/20/2003  02:23 PM            3,061 pust015_case_3.inp
09/24/2007  07:07 PM          565,099 pust015_case_3.out
06/20/2003  02:23 PM            3,061 pust015_case_4.inp
09/24/2007  07:09 PM          565,007 pust015_case_4.out
06/20/2003  02:23 PM            3,060 pust015_case_5.inp
09/24/2007  07:10 PM          565,211 pust015_case_5.out
04/09/2003  03:15 PM            2,996 pust015_case_6.inp
09/24/2007  07:11 PM          565,195 pust015_case_6.out
04/09/2003  03:15 PM            3,788 pust015_case_7.inp
09/24/2007  07:13 PM          565,057 pust015_case_7.out
04/09/2003  03:15 PM            3,199 pust015_case_8.inp
09/24/2007  07:14 PM          566,643 pust015_case_8.out
```

```
04/09/2003  03:15 PM            3,200 pust015_case_9.inp
09/24/2007  07:15 PM          566,059 pust015_case_9.out
06/20/2003  02:26 PM            2,793 pust016_case_1.inp
09/24/2007  07:15 PM          551,310 pust016_case_1.out
06/20/2003  02:26 PM            2,720 pust016_case_10.inp
09/24/2007  07:16 PM          541,390 pust016_case_10.out
06/20/2003  02:26 PM            2,721 pust016_case_11.inp
09/24/2007  07:17 PM          540,894 pust016_case_11.out
06/20/2003  02:26 PM            2,790 pust016_case_2.inp
09/24/2007  07:18 PM          551,580 pust016_case_2.out
06/20/2003  02:26 PM            2,790 pust016_case_3.inp
09/24/2007  07:18 PM          552,255 pust016_case_3.out
06/20/2003  02:26 PM            2,792 pust016_case_4.inp
09/24/2007  07:19 PM          552,039 pust016_case_4.out
06/20/2003  02:26 PM            2,781 pust016_case_5.inp
09/24/2007  07:20 PM          552,083 pust016_case_5.out
06/20/2003  02:26 PM            2,778 pust016_case_6.inp
09/24/2007  07:20 PM          550,805 pust016_case_6.out
06/20/2003  02:26 PM            2,778 pust016_case_7.inp
09/24/2007  07:21 PM          552,053 pust016_case_7.out
06/20/2003  02:26 PM            2,778 pust016_case_8.inp
09/24/2007  07:22 PM          551,678 pust016_case_8.out
06/20/2003  02:26 PM            2,724 pust016_case_9.inp
09/24/2007  07:22 PM          542,660 pust016_case_9.out
06/20/2003  02:29 PM            2,796 pust017_case_1.inp
09/24/2007  07:23 PM          551,279 pust017_case_1.out
06/20/2003  02:30 PM            2,846 pust017_case_10.inp
09/24/2007  07:24 PM          551,455 pust017_case_10.out
06/20/2003  02:30 PM            2,755 pust017_case_11.inp
09/24/2007  07:25 PM          551,373 pust017_case_11.out
06/20/2003  02:30 PM            2,853 pust017_case_12.inp
09/24/2007  07:25 PM          551,457 pust017_case_12.out
06/20/2003  02:30 PM            2,858 pust017_case_13.inp
09/24/2007  07:26 PM          551,677 pust017_case_13.out
06/20/2003  02:30 PM            2,855 pust017_case_14.inp
09/24/2007  07:27 PM          551,869 pust017_case_14.out
06/20/2003  02:29 PM            2,855 pust017_case_15.inp
09/24/2007  07:28 PM          551,270 pust017_case_15.out
06/21/2003  11:09 AM            2,890 pust017_case_16.inp
09/24/2007  07:28 PM          551,439 pust017_case_16.out
06/20/2003  02:29 PM            2,860 pust017_case_17.inp
09/24/2007  07:29 PM          551,968 pust017_case_17.out
06/21/2003  11:09 AM            2,892 pust017_case_18.inp
09/24/2007  07:30 PM          551,026 pust017_case_18.out
06/20/2003  02:29 PM            2,845 pust017_case_2.inp
09/24/2007  07:30 PM          551,967 pust017_case_2.out
06/20/2003  02:29 PM            2,847 pust017_case_3.inp
09/24/2007  07:31 PM          551,651 pust017_case_3.out
06/20/2003  02:29 PM            2,847 pust017_case_4.inp
09/24/2007  07:32 PM          551,157 pust017_case_4.out
06/20/2003  02:29 PM            2,847 pust017_case_5.inp
09/24/2007  07:32 PM          551,783 pust017_case_5.out
06/20/2003  02:29 PM            2,847 pust017_case_6.inp
09/24/2007  07:33 PM          550,921 pust017_case_6.out
06/20/2003  02:29 PM            2,847 pust017_case_7.inp
09/24/2007  07:34 PM          551,063 pust017_case_7.out
06/20/2003  02:29 PM            2,844 pust017_case_8.inp
09/24/2007  07:34 PM          551,491 pust017_case_8.out
06/20/2003  02:29 PM            2,846 pust017_case_9.inp
09/24/2007  07:35 PM          552,307 pust017_case_9.out
```

```
04/05/2003  06:30 PM             1,367 pust020_case_1.inp
09/24/2007  07:37 PM           658,977 pust020_case_1.out
04/05/2003  06:26 PM             1,368 pust020_case_2.inp
09/24/2007  07:39 PM           660,404 pust020_case_2.out
04/05/2003  06:30 PM             1,367 pust020_case_3.inp
09/24/2007  07:41 PM           659,666 pust020_case_3.out
04/05/2003  06:30 PM             1,367 pust020_case_5.inp
09/24/2007  07:42 PM           659,611 pust020_case_5.out
04/05/2003  06:31 PM             1,367 pust020_case_6.inp
09/24/2007  07:44 PM           658,730 pust020_case_6.out
04/05/2003  06:31 PM             1,367 pust020_case_7.inp
09/24/2007  07:46 PM           658,547 pust020_case_7.out
04/05/2003  06:32 PM             1,444 pust020_case_8.inp
09/24/2007  07:47 PM           685,325 pust020_case_8.out
04/05/2003  06:32 PM             1,444 pust020_case_9.inp
09/24/2007  07:49 PM           684,401 pust020_case_9.out
04/09/2003  03:02 PM               779 pust021_case_10.inp
09/24/2007  07:51 PM           566,314 pust021_case_10.out
04/09/2003  03:02 PM               635 pust021_case_7.inp
09/24/2007  07:52 PM           541,196 pust021_case_7.out
04/09/2003  03:02 PM               637 pust021_case_8.inp
09/24/2007  07:52 PM           541,239 pust021_case_8.out
04/09/2003  03:02 PM               638 pust021_case_9.inp
09/24/2007  07:53 PM           541,113 pust021_case_9.out
04/09/2003  03:07 PM             2,156 pust024_case_1.inp
09/24/2007  07:53 PM           554,326 pust024_case_1.out
04/09/2003  03:04 PM             2,167 pust024_case_10.inp
09/24/2007  07:54 PM           555,321 pust024_case_10.out
04/09/2003  03:04 PM             2,169 pust024_case_11.inp
09/24/2007  07:54 PM           554,168 pust024_case_11.out
04/09/2003  03:04 PM             2,169 pust024_case_12.inp
09/24/2007  07:55 PM           554,850 pust024_case_12.out
04/09/2003  03:04 PM             2,169 pust024_case_13.inp
09/24/2007  07:55 PM           554,438 pust024_case_13.out
04/09/2003  03:04 PM             2,178 pust024_case_14.inp
09/24/2007  07:56 PM           553,515 pust024_case_14.out
04/09/2003  03:04 PM             2,177 pust024_case_15.inp
09/24/2007  07:56 PM           554,742 pust024_case_15.out
04/09/2003  03:04 PM             2,177 pust024_case_16.inp
09/24/2007  07:57 PM           554,812 pust024_case_16.out
04/09/2003  03:04 PM             2,174 pust024_case_17.inp
09/24/2007  07:57 PM           553,719 pust024_case_17.out
04/09/2003  03:04 PM             2,179 pust024_case_18.inp
09/24/2007  07:58 PM           554,401 pust024_case_18.out
04/09/2003  03:04 PM             2,179 pust024_case_19.inp
09/24/2007  07:58 PM           554,379 pust024_case_19.out
04/09/2003  03:08 PM             2,149 pust024_case_2.inp
09/24/2007  07:59 PM           554,178 pust024_case_2.out
04/09/2003  03:06 PM             2,175 pust024_case_20.inp
09/24/2007  08:00 PM           554,137 pust024_case_20.out
04/09/2003  03:06 PM             2,174 pust024_case_21.inp
09/24/2007  08:00 PM           554,908 pust024_case_21.out
04/09/2003  03:06 PM             2,175 pust024_case_22.inp
09/24/2007  08:01 PM           555,191 pust024_case_22.out
04/09/2003  03:06 PM             2,175 pust024_case_23.inp
09/24/2007  08:02 PM           554,705 pust024_case_23.out
04/09/2003  03:08 PM             2,153 pust024_case_3.inp
09/24/2007  08:02 PM           554,527 pust024_case_3.out
04/09/2003  03:08 PM             2,153 pust024_case_4.inp
09/24/2007  08:03 PM           553,790 pust024_case_4.out
```

```
04/09/2003  03:08 PM            2,150 pust024_case_5.inp
09/24/2007  08:03 PM          554,777 pust024_case_5.out
04/09/2003  03:07 PM            2,172 pust024_case_6.inp
09/24/2007  08:03 PM          553,711 pust024_case_6.out
04/09/2003  03:07 PM            2,172 pust024_case_7.inp
09/24/2007  08:04 PM          553,600 pust024_case_7.out
04/09/2003  03:07 PM            2,172 pust024_case_8.inp
09/24/2007  08:04 PM          555,023 pust024_case_8.out
04/08/2003  05:06 AM            2,168 pust024_case_9.inp
09/24/2007  08:05 PM          554,631 pust024_case_9.out
```

	COMPUTER RUN RECORD
Computer Run Number	See Input File Names
Analysis Software	USLSTATS Version 1.4.2
Hardware Description	Windows XP/Xeon Processor QA verification for USLSTATS is included with the SCALE5 QA verification documentation [6]. Models were executed on computer ADANC491TC.
Disk Storage Description	Compact Disc

```
10/08/2007  09:13 AM              396 AEG1.i
10/08/2007  09:13 AM            4,365 aeg1.o
10/08/2007  09:14 AM              764 AEG2.i
10/08/2007  09:14 AM            5,343 aeg2.o
10/08/2007  09:11 AM            4,559 AEG3.i
10/08/2007  09:11 AM           14,145 aeg3.o
10/05/2007  04:17 PM            5,273 AEG4.i
10/05/2007  04:17 PM           15,769 aeg4.o
10/08/2007  12:33 PM            5,457 AEG5.i
10/08/2007  12:33 PM           16,189 aeg5.o
10/08/2007  09:18 AM            4,562 HX.i
10/08/2007  09:18 AM           13,949 hx.o
```

Analysis Software	Excel
Disk Storage Description	Compact Disc

Several Excel files are used in this analysis. Input files are developed in Excel to minimize errors and simplify input preparation. Case G and Case H input files are located in files INPUT_CASEG.XLS and INPUT_CASEH.XLS, respectively. KENO results are summarized in RESULTS.XLS, and benchmark results are summarized in BENCH.XLS.

```
input_caseG.xls
input_caseH.xls
Results.xls
bench.xls
```