PMSTPCOL PEmails

From: Mookhoek, William [wemookhoek@STPEGS.COM]
Sent: Thursday, January 20, 2011 2:14 PM
To: Wunder, George
Cc: Head, Scott; Chappell, Coley; Cashell, George S
Subject: SSAR References
Attachments: COLA 1 1 1 Markup.pdf

George,
Scott Head asked me to provide you a copy of the proposed draft on how we will handle your question on references in the DCD/CLOA to the SSAR. We have researched all such references and have the attached proposed markup that would be included in COLA Revision 6. I need to know if this proposal meets what you need included in the application to close this question. We have made a couple of edits from the copy Scott left with Mark Tonacci. I look forward to hearing back from you on this.

Bill Mookhoek
Licensing Supervisor STP 3 & 4
wemookhoek@stpegs.com
office 361-972-7274
cell - 979-429-0384

Hearing Identifier: SouthTexas34Public_EX
Email Number: 2600

Mail Envelope Properties (20A706591B736645936B55E5E6BA22F325947C07DB)

Subject: SSAR References
Sent Date: 1/20/2011 2:14:19 PM
Received Date: 1/20/2011 2:19:57 PM
From: Mookhoek, William

Created By: wemookhoek@STPEGS.COM

Recipients:
"Head, Scott" <smhead@STPEGS.COM>
Tracking Status: None
"Chappell, Coley" <ccchappell@STPEGS.COM>
Tracking Status: None
"Cashell, George S" <gscashell@STPEGS.COM>
Tracking Status: None
"Wunder, George" <George.Wunder@nrc.gov>
Tracking Status: None

Post Office: exgmb1.CORP.STPEGS.NET

Files	**Size**	**Date & Time**
MESSAGE	639	1/20/2011 2:19:57 PM
COLA 1 1 1 Markup.pdf	7144343	

Options
Priority: Standard
Return Notification: No
Reply Requested: No
Sensitivity: Normal
Expiration Date:
Recipients Received:

1.1 Introduction

The information in this section of the reference ABWR DCD, including all subsections and figures, is incorporated by reference with departures and supplements.

STD DEP 1.1-1

STP DEP 1.1-2

STP DEP 10.1-3 (Figure 1.1-2)

STD DEP Vendor

1.1.1 Format and Content

The information in this subsection of the reference ABWR DCD is incorporated by reference with the following site-specific supplement.

The STP Combined License Application (COLA), Part 2, Final Safety Analysis Report (FSAR) incorporates the ABWR DCD, as applicable, by reference, without repeating the information from the DCD. The reference ABWR DCD refers to U.S. ABWR Design Control Document, GE Nuclear Energy, Revision 4 dated March 1997, as approved in 10 CFR Part 52, Appendix A, and as modified by the STP Nuclear Operating Company Application to Amend the Design Certification Rule for the U.S. Advanced Boiling Water Reactor (ABWR), dated June 30, 2009.

The FSAR, as required by the ABWR design certification rule (10 CFR 52, Appendix A, Section IV.A.2.a), maintains the ABWR DCD organization and numbering system.

In some cases, new sections have been added to accommodate Regulatory Guide (RG) 1.206 guidance. In general, those new sections are designated with an “S”. For example, ABWR DCD Tier 2, Section 1.9 is entitled “COL License Information.” However, Regulatory Guide 1.206, Section 1.9 is entitled “Conformance with Regulatory Criteria.” Therefore, STP Nuclear Operating Company (STPNOC) has incorporated by reference Tier 2, Section 1.9 and has added a new Section 1.9S entitled “Conformance with Regulatory Criteria.”

There are two exceptions to the “S” section format convention.

- The individual Chapter 18 sections in Regulatory Guide 1.206 have different titles than the reference ABWR DCD, so they would be candidates for having the “S” designator. However, Regulatory Guide 1.206 requests the description of a Human Factors Engineering (HFE) process consisting of 12 program review elements. The guidance for describing an HFE process at the time the ABWR was certified consisted of eight elements, as described in Appendix 18E and other sections of the FSAR. The approved, and largely equivalent, HFE process information from the ABWR DCD is incorporated by reference.

- DG-1145 identified six new sections in Chapter 19 and STPNOC developed six “S” sections to meet those requirements. Regulatory Guide 1.206 identifies only three

sections, but they have different content requirements than DG-1145. STPNOC will incorporate the reference ABWR DCD Chapter 19 sections by reference and supplement that information with one “S” section that provides a roadmap to the location of the information requested by Regulatory Guide 1.206.

The information in each section of the FSAR (or subsection, based on section length and complexity) is presented in the order of text first, tables second, and figures third. Text pages are oriented in portrait with tables and figures in portrait or landscape. Figure pages may be as large as 11” x 17”. Page numbering uses the section number followed by a hyphen and sequential numbering for the page in that section (e.g., the fourth page in section 3.2 is numbered as 3.2-4).

There are primarily two types of new information in the FSAR:

- Departures from the information in the DCD; and
- Supplements to the information in the DCD (including information to address COL License Information Items; information to replace conceptual design information in the DCD; information on siting and site-specific systems, organizations, and programs; and information requested by Regulatory Guide 1.206 that pertains to issues not addressed in the DCD).

The STP 3 & 4 COLA is the reference-COLA (R-COLA) for the ABWR standard design. Departures and supplements are designated as either:

- “standard,” meaning that the information is suitable for use in subsequent COLAs (S-COLAs), e.g., STD DEP 6.2-1; and
- “site-specific,” meaning that the information is applicable only to STP 3 & 4, e.g., STP DEP 6.2-1.

Each departure is designated with a unique number. For example, STD DEP 17.6-2 is a standard departure in section 17.6 and is the second departure in that section. If departures are in Tier 1, the designation “T1” is added, e.g. STD DEP T1 3.6-1. Site-specific departures begin with “STP” instead of “STD”. Departures are numbered based on the primary section that describes the system containing the departure. Because departures can affect many sections, the single departure number is used in all sections affected by the departure. There is a category of administrative departures that correct non-technical errors in the DCD, such as incorrect figure references or typographical errors in equations. These are designated as STD DEP Admin.

In situations where it is necessary to provide both reference ABWR DCD and FSAR information within a paragraph (e.g., for departures from the DCD), the text is presented as follows. *Italicized text* is used for ABWR DCD information printed in the FSAR. Deleted ABWR DCD information is identified with italicized strikethrough (e.g., ~~*strikethrough*~~) text.Arial <u>underlined unitalicized text</u> is used for new information.

To the maximum extent practical, the FSAR uses the table and figure numbering directly from the reference ABWR DCD. Tables and figures use the same numbering

sequence. Tables and figures associated with a #.# section number are numbered in a #.# -# format, and are numbered in the order in which they are addressed in the section (e.g., the third figure discussed in Section 15.4 is numbered "Figure 15.4-3.") To indicate ABWR DCD vs. combined license application (COLA) information within a table or figure, an Arial font is used for ABWR DCD information that is retained and a bold **Arial** font is used for new information. Deleted reference ABWR DCD information in a table or figure is identified by a strikethrough (e.g., ~~*strikethrough*~~). Revisions to figures are highlighted with bubbles. If a bubble contains information, the contents have been added or revised, if the bubble is empty, previous content has been deleted.

Proprietary and security sensitive information contained within the FSAR is presented in accordance with the guidance provided in COLA Part 1, Introduction.

Acronyms are used in the FSAR text, tables, and figures to reference frequently used or repeated systems, components, or parameters. Each acronym is defined the first time it is used in a section (X.Y).

The term "incorporated by reference" (IBR) means the words that are incorporated by reference from the ABWR DCD are considered to be part of the COLA as though each word had been retyped into the COLA. A descriptive phrase is used each time the term "incorporated by reference" is used to explain the specific situation. For example,

- "Incorporated by reference with no departures or supplements" specifically indicates that there are no changes whatsoever to the reference ABWR DCD information incorporated by reference.
- "Incorporated by reference with the following departure" indicates that a certain departure from the reference ABWR DCD verbiage is taken.
- "Incorporated by reference with the following supplement" indicates that the ABWR DCD words are included in their entirety, but additional information is also included. Supplements are designated as site-specific or standard, but are not numbered.
- "Incorporated by reference with the following departures and supplements" indicates that both departures (which are numbered) are taken and supplemental information is added.
- Some sections may include both departures and supplements; other sections may include only departures or supplements. The introductory language for each section indicates which case applies.

The FSAR incorporates by reference information from the reference ABWR DCD at the "X.Y" section level. This incorporation by reference includes all lower level subsections within the DCD (e.g., "X.Y.Z" subsections) and all tables and figures associated with the sections, unless otherwise specified.

In general, when a departure affects relatively few paragraphs within a section, only those paragraphs are reproduced within the FSAR identifying the changes in the text of the reference ABWR DCD. In a few cases, sections (e.g., 9.1 and 6C) have enough

departures that they are reproduced entirely in italics with ~~*strikeouts*~~ and underlining to indicate the changes. In other cases, the DCD text within a section is deleted in its entirety and replaced with completely new text. These cases are explained at the beginning of the respective sections.

The reference ABWR DCD contains some information termed "conceptual," indicating that the design was not finalized and was not approved by the NRC. The STP 3 & 4 COLA addresses this conceptual information with supplemental design information. The replacement of conceptual design information with supplemental design information is considered a supplement.

COL License Information Items are addressed in the COL License Information summary subsections which occur at the end of each FSAR section. In a few cases there are COL License Information Items that are not summarized at the end of DCD sections. In these cases, the COLA addresses them as supplements as part of the subsection in which they are located. The information that addresses the COL License Information Items is a supplement.

When the FSAR refers to Section X.Y, Appendix XA, Figure X.Y-1, or Table X.Y-2, the reference is to the associated section, appendix, figure, or table in this FSAR. If there is a reference to a section, appendix, figure, or table in the reference ABWR DCD, the FSAR specifically refers to the DCD, e.g., "DCD Section X.Y". If there is a reference to a section in another part of the COLA, the COLA Part number or title will precede the section referral, e.g., "Environmental Report Section X.Y".

Regulatory Guide 1.206 requests a supplemental list of acronyms for items not included in the referenced certified design. Acronyms are defined the first time they are used in each section (X.Y) of the FSAR, so a list of definitions is unnecessary. There is a list of standard acronyms that are universally understood in this application and do not require definition the first time they are used in a section. That list of standard acronyms is limited to ABWR, DCD, DOE, GE, LWR, NINA, NRC, STP, STPNOC, U.S., and USA. In Part 1 of the COLA and Part 2, Tier 2, Chapters 1, 13 and 17, the acronym "STPNOC" means STP Nuclear Operating Company. Otherwise, "STPNOC" means the lead applicant or lead licensee responsible for either design and construction (i.e., NINA) or operations (i.e., STPNOC) depending upon the applicable time period or historical context. As such, unless referring to a historical action that occurred prior to November xx, 2010, "STPNOC" means NINA until the date on which the Commission makes a finding that acceptance criteria are met under 10 CFR 52.103(g) or allows operation during an interim period under the combined license under 10 CFR 52.103(c). Thereafter, it means STPNOC.

Insert SSAR

1.1.4 Design Process

The following supplement addresses COL License Information Item 1.1.

The project design process is fully described in the STP 3 & 4 Quality Assurance Program Description submitted under separate cover and referenced in FSAR Section 17.5S.

DRAFT

Insert SSAR

The ABWR DCD has references to the ABWR Standard Safety Analysis Report (SSAR).

These DCD references to the SSAR can be divided into seven categories:

1) Proprietary information that must be included in the plant-specific DCD in accordance with Section IV.A.3 of Appendix A to Part 52 of the ABWR Design Certification Rule. This information, referenced in Tier 2, Sections 3B, 4.3, 4A, 4B, 4D, 6.3, and 18H, is contained in COLA Part 10.

2) Proprietary information not included in the DCD, but referenced in the SSAR as being submitted under separate cover. This information, referenced in Tier 2, Section 1.3, is possessed by a STPNOC contractor and is available under contract for possession and use by STPNOC

3) Safeguards information that must be included in the plant-specific DCD in accordance with Section IV.A.3 of Appendix A to Part 52 of the ABWR Design Certification Rule. This information, referenced in Tier 2, Section 13 is contained in COLA Part 8, or is possessed by a STPNOC contractor and is available under contract for possession and use by STPNOC.

4) Detailed PRA information. This information, referenced in Tier 2, Sections 15D and 19, is specifically not incorporated into the DCD in accordance with 10 CFR 52, Appendix A, Section IIIB.

5) Proprietary information not included in the DCD that has been fully incorporated into the COLA and is no longer proprietary. This information, referenced in Tier 2, Section 11A has been fully incorporated into FSAR Sections 11.2 and 11.4.

6) Tier 2 references that consist of historical responses by GE Nuclear Energy to NRC requests for additional information associated with preparation of the DCD. This information, referenced in Tier 2, Section 20, has been retained and is interpreted as a reference to Tier 2 of the DCD, as stated in Section 20.0, "Question and Response Guide."

7) Use of the term SSAR to reference sections or subsections that are identical to the corresponding DCD sections or subsections. This information, referenced in Tier 2, Sections 3.13, 7.7, 8.3 and 9A has been verified to be identical to the information contained in the SSAR.

Table 1.1-1 provides a breakdown of the Tier 2 references to the SSAR and how they have been resolved.

DRAFT

1.1.5 Type of License Required

STD DEP 1.1-1

This subsection of the reference ABWR DCD is replaced in its entirety by the following site-specific departure.

The STP 3 & 4 FSAR is submitted in support of the application for a Class 103 Combined License under 10 CFR 52.

The following site-specific supplement is added to this subsection.

The scheduled completion dates (fuel load) for STP 3 & 4 are September 2014 and October 2015, respectively, with anticipated commercial operation dates of June 2015 and July 2016, respectively.

1.1.6 Number of Plant Units

STP DEP 1.1-2

This subsection of the reference ABWR DCD is replaced in its entirety by the following site-specific departure.

STP 3 & 4 is a two unit facility.

1.1.7 Description of Location

The information in this subsection of the reference ABWR DCD is incorporated by reference with the following site-specific supplement.

The STP 3 & 4 site is located in south-central Matagorda County, Texas; west of the Colorado River, 8 miles north-northwest of the town of Matagorda; and approximately 89 miles southwest of Houston as shown on Figure 1.1-3. The facility is co-located with STP 1 & 2, two existing pressurized water reactors, as shown in Figure 1.1-4.

1.1.8 Type of Nuclear Steam Supply

STD DEP Vendor

This plant will have a boiling water reactor (BWR) nuclear steam supply system (NSSS) ~~designed and supplied by GE and~~ designated as ABWR.

1.1.11.1 Design Process to Establish Detailed Design Documentation

The following site-specific supplemental information addresses COL License Information Item 1.1.

The design process utilized to establish the STP 3 & 4 detailed design documentation is described in Subsection 1.1.4.

Insert Table 1.1-1

DRAFT

Insert Table 1.1-1

Table 1.1-1 DCD References to the SSAR

Section	Item	Resolution
1.3	Table 1.3-1 Footnote 3	Proprietary information is possessed by a STPNOC contractor and is available under contract for possession and use by STPNOC.
3.13	3.13.3 General ABWR Containment Structures, Systems and Barrier Descriptions	DCD identical to the SSAR
3B	Tables 3B-2, 3, 4, 5, 6, 7, 8, 9 and Figures 3B-2, 3, 8, 9, 10, 14, 15, 16, 17, 18, 19, 20, 22, 23, 24, 25, 27, 29, 31, 32, 33, and 34	Incorporated into COLA Part 10
4.3	Figure 4.3-2	Incorporated into COLA Part 10
4A	Figures 4A-1a, 4A-1d, 4A-1e, 4A-2a, 4A-2d, 4A-2e, 4A-3a, 4A-3d, 4A-3e, 4A-4a, 4A-4d, 4A-4e, 4A-5a, 4A-5d, 4A-5e, 4A-6a, 4A-6d, 4A-6e, 4A-7a, 4A-7d, 4A-7e, 4A-8a, 4A-8d, 4A-8e, 4A-9a, 4A-9d, 4A-9e, 4A-10a, 4A-10d, 4A-10e, 4A-11a, 4A-11d, 4A-11e, 4A-12a, 4A-12d,4A-12e, 4A-13a, 4A-13d, and 4A-13e.	Incorporated into COLA Part 10
4B	4B.2 References	Incorporated into COLA Part 10
4D	Reference Fuel Design Compliance with Acceptance Criteria	Incorporated into COLA Part 10
6.3	Table 6.3-6 and Figures 6.3-10 through 6.3-79	Incorporated into COLA Part 10
7.7	7.7.2.11 Other Non-Safety-Related Control Systems	DCD identical to SSAR
7.7	Figure 7.7-3, Sheet 71 of 87	DCD identical to SSAR with exception of interim drawing identification information
8.3	8.3.5 References	DCD identical to SSAR
9A	9A.4.2.4.1 Control Room Complex	DCD identical to SSAR

DRAFT

DRAFT

9A	9A.4.2.6.1 Control Room HVAC Supply "B" (Rm No. 621)	DCD identical to SSAR
9A	Table 9A.6-2	DCD identical to SSAR
9A	Table 9A.6-4	Reference to the SSAR removed in COLA
11A	11A.2 Liquid Waste Management	Proprietary information incorporated into COLA and made non-proprietary
11A	11A.4 Solid Waste Management System	Proprietary information incorporated into COLA and made non-proprietary
13.6	13.6.2 Security Plan	Safeguards Information is possessed by a STPNOC contractor and is available under contract for possession and use by STPNOC.
13.6	13.6.3 COL License Information	Incorporated into COLA Part 8
15D	Table 15D-1 Logic Equations	PRA information referenced in the SSAR is not incorporated in the DCD as stated in Part 52, Appendix A, Section III.B.
15D	Figures 15D-2 through 15D-5	PRA information referenced in the SSAR is not incorporated in the DCD as stated in Part 52, Appendix A, Section III.B.
18H	Tables 18H-1 through 18H-14	Incorporated into COLA Part 10
19	Various	PRA information referenced in the SSAR is not incorporated in the DCD as stated in Part 52, Appendix A, Section III.B.
20	20.0 Question and Response Guide	As provided in DCD Tier 2 Chapter 20, "Each Tier 2 reference to the SSAR in this chapter shall be interpreted as a reference to Tier 2 of the DCD."

DRAFT

DRAFT

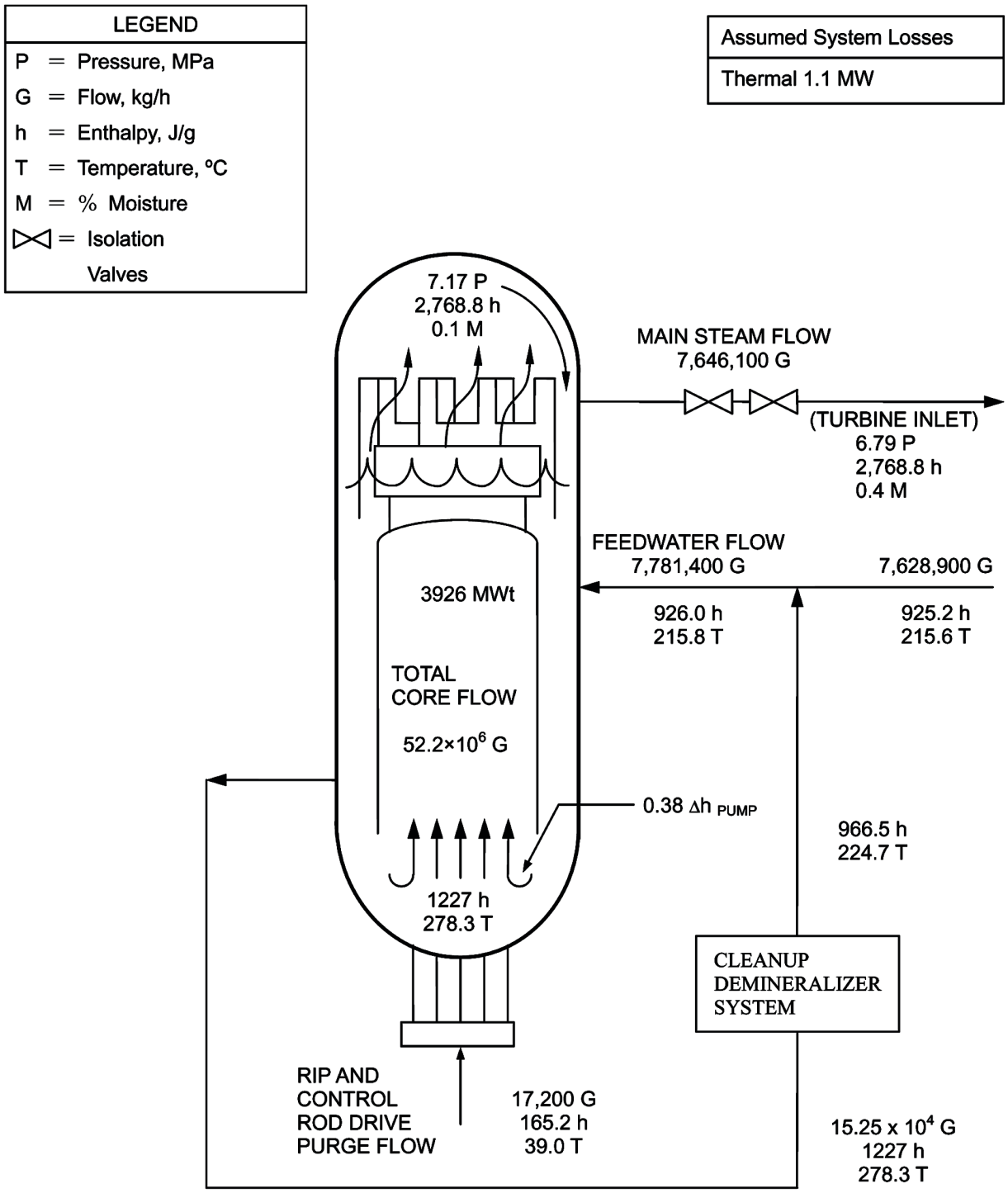

Figure 1.1-2 Heat Balance at Rated Power

DRAFT

DRAFT

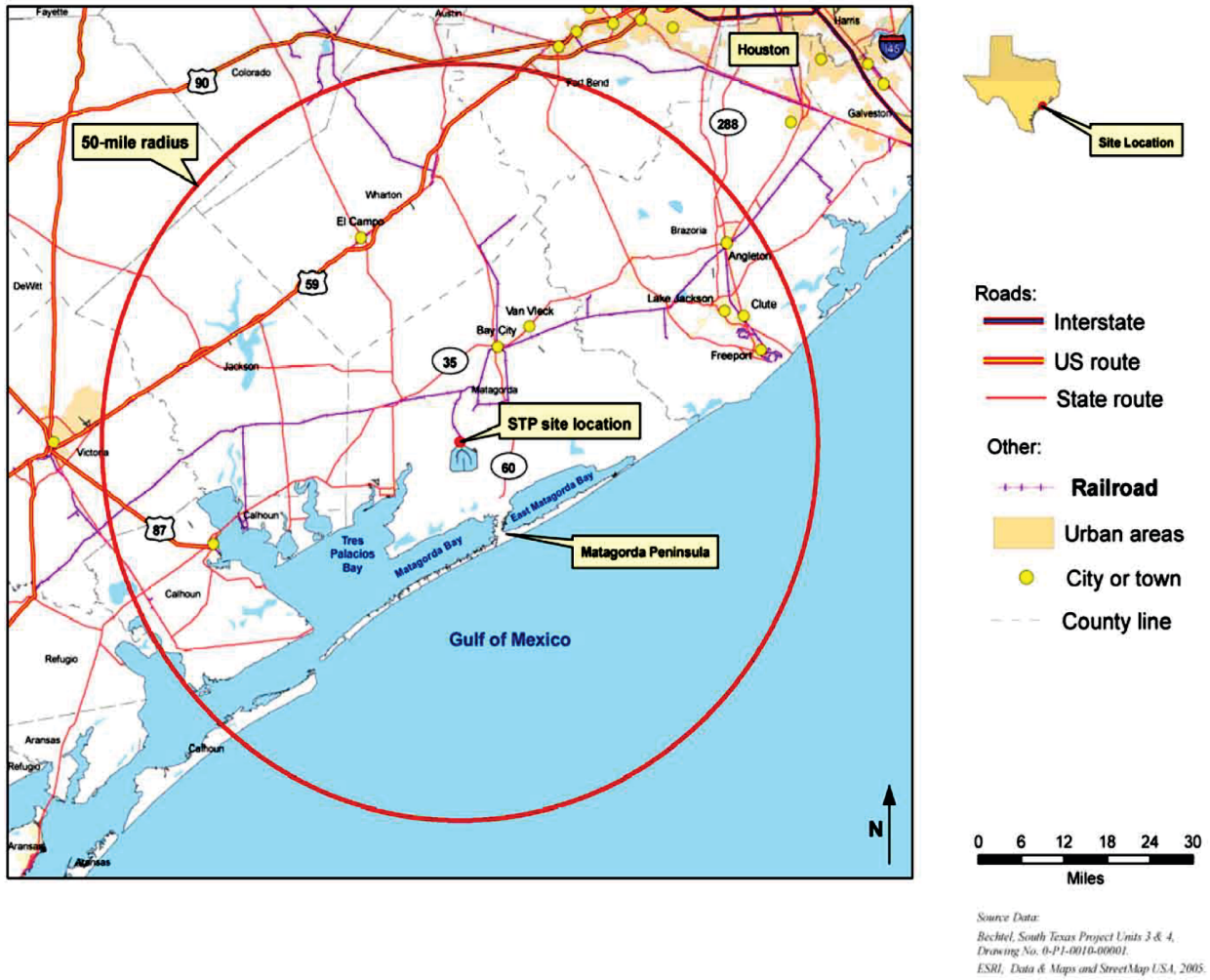

Figure 1.1-3 Surrounding Area Map

DRAFT

DRAFT

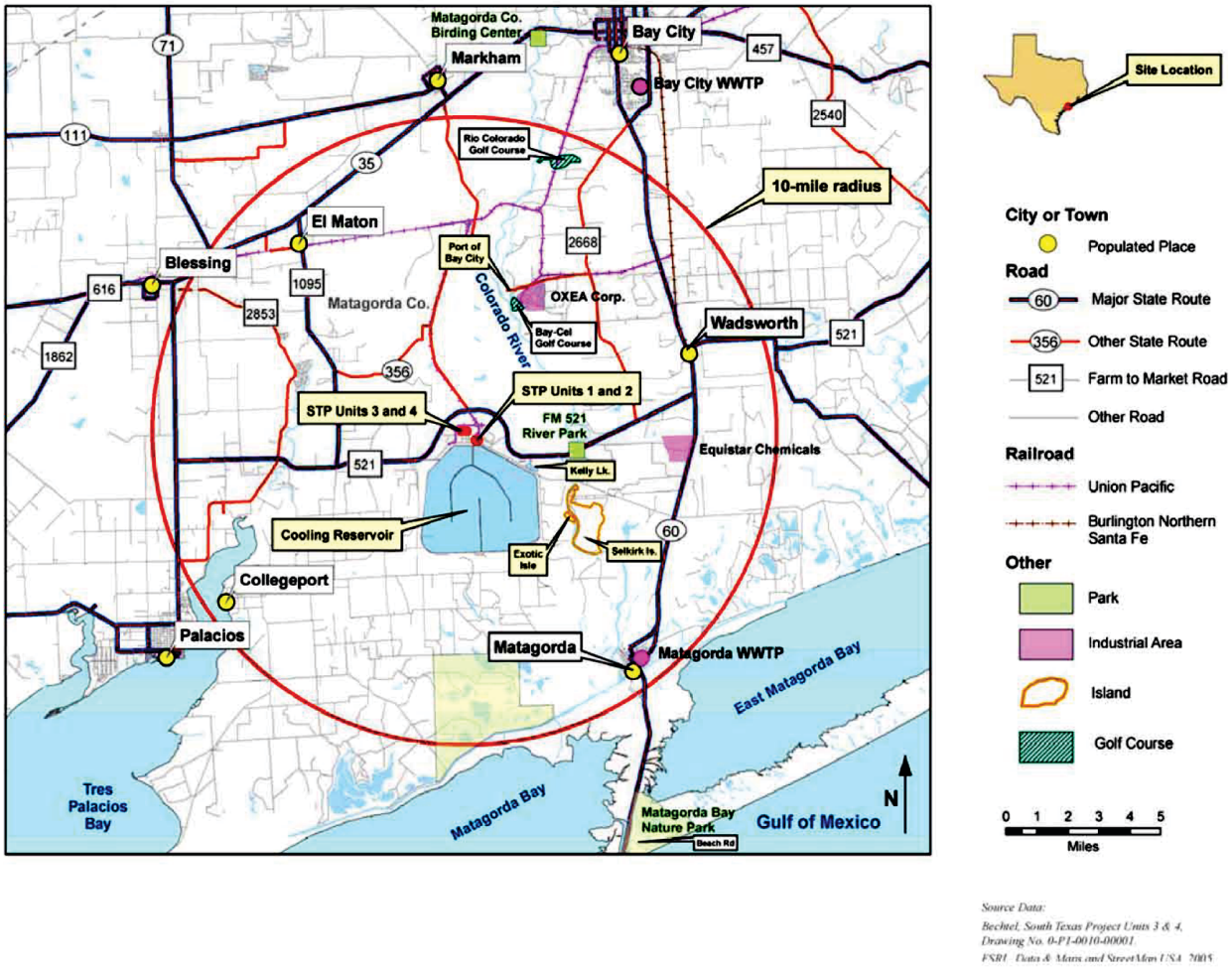

Figure 1.1-4 10-Mile Radius Map

DRAFT