ArevaEPRDCPEm Resource

From: BRYAN Martin (EXTERNAL AREVA) [Martin.Bryan.ext@areva.com]
Sent: Friday, February 18, 2011 4:30 PM
To: Tesfaye, Getachew
Cc: DELANO Karen (AREVA); ROMINE Judy (AREVA); BENNETT Kathy (AREVA); KOWALSKI David (AREVA); WELLS Russell (AREVA)
Subject: Response to U.S. EPR Design Certification Application RAI No. 465, FSARCh. 9
Attachments: RAI 465 Response US EPR DC.pdf

Getachew,

Attached please find AREVA NP Inc.'s response to the subject request for additional information (RAI). The attached file, "RAI 465 Response US EPR DC.pdf" provides a technically correct and complete response to the question.

Because the response file contains security-related sensitive information that should be withheld from public disclosure in accordance with 10 CFR 2.390, a public version is provided with the security-related sensitive information redacted. This email does not contain any security-related information. The unredacted SUNSI version is provided under separate email.

Appended to this file are affected pages of the U.S. EPR Final Safety Analysis Report, which support previously-submitted RAI responses.

The following table indicates the respective pages in the response document, "RAI 465 Response US EPR DC.pdf," that contain AREVA NP's response to the subject question.

Question #	Start Page	End Page
RAI 465 — 09.02.01-51	2	3

This concludes the formal AREVA NP response to RAI 465, and there are no questions from this RAI for which AREVA NP has not provided responses.

Sincerely,

Martin (Marty) C. Bryan
U.S. EPR Design Certification Licensing Manager
AREVA NP Inc.
Tel: (434) 832-3016
702 561-3528 cell
Martin.Bryan.ext@areva.com

From: Tesfaye, Getachew [mailto:Getachew.Tesfaye@nrc.gov]
Sent: Tuesday, January 25, 2011 6:35 AM
To: ZZ-DL-A-USEPR-DL
Cc: Wheeler, Larry; Eul, Ryan; Lee, Samuel; Segala, John; Hearn, Peter; Colaccino, Joseph; ArevaEPRDCPEm Resource
Subject: U.S. EPR Design Certification Application RAI No. 465 (5305), FSARCh. 9

Attached please find the subject requests for additional information (RAI). A draft of the RAI was provided to you on December 8, 2010, and on December 20, 2010, you informed us that the RAI is clear and no further clarification is needed. As a result, no change is made to the draft RAI. The schedule we have established for review of your application assumes technically correct and complete responses within 30 days of receipt of RAIs. For any RAIs that cannot be answered within 30, it is expected that a date for receipt of this information

will be provided to the staff within the 40-day period so that the staff can assess how this information will impact the published schedule.

Thanks,
Getachew Tesfaye
Sr. Project Manager
NRO/DNRL/NARP
(301) 415-3361

Hearing Identifier: AREVA_EPR_DC_RAIs
Email Number: 2579

Mail Envelope Properties (199EBB4D1CD9644D9472AA84D5D8EFA71FB92F)

Subject: Response to U.S. EPR Design Certification Application RAI No. 465, FSARCh. 9
Sent Date: 2/18/2011 4:30:07 PM
Received Date: 2/18/2011 4:34:33 PM
From: BRYAN Martin (EXTERNAL AREVA)

Created By: Martin.Bryan.ext@areva.com

Recipients:
"DELANO Karen (AREVA)" <Karen.Delano@areva.com>
Tracking Status: None
"ROMINE Judy (AREVA)" <Judy.Romine@areva.com>
Tracking Status: None
"BENNETT Kathy (AREVA)" <Kathy.Bennett@areva.com>
Tracking Status: None
"KOWALSKI David (AREVA)" <David.Kowalski@areva.com>
Tracking Status: None
"WELLS Russell (AREVA)" <Russell.Wells@areva.com>
Tracking Status: None
"Tesfaye, Getachew" <Getachew.Tesfaye@nrc.gov>
Tracking Status: None

Post Office: AUSLYNCMX02.adom.ad.corp

Files	**Size**	**Date & Time**
MESSAGE	2536	2/18/2011 4:34:33 PM
RAI 465 Response US EPR DC.pdf	5223140	

Options
Priority: Standard
Return Notification: No
Reply Requested: No
Sensitivity: Normal
Expiration Date:
Recipients Received:

Response to

Request for Additional Information No. 465(5305), Revision 0

1/25/2011

U. S. EPR Standard Design Certification
AREVA NP Inc.
Docket No. 52-020
SRP Section: 09.02.01 - Station Service Water System
Application Section: FSAR Chapter 9

QUESTIONS for EPR Projects Branch (NARP)

Question 09.02.01-51:

Provide Interim Revision 3 FSAR markups for the following sections:
Tier 1
2.7.1 (text, tables, and figures)
2.7.2 (Text, tables, and figures
Section 2.7.11 (all tables + all figures)
Section 4.6
Section 4.7
Tier 2
Table 1.8-1
Table 2.1-1
Table 1.8-2
Section 2.3.1.2
Table 3.2.2-1
Section 3.4.3.3
Section 3.8.4.7
Figure 3.8-101
Table 3.9.6-2
Table 3.10-1
Table 3.11-1
Table 6.2.4-1 (based on RAI 406, Question 9.2.2-114)
Section 7.6.1.2.3 (based on RAI 406, Question 9.2.2-114) page 7.6-5
Section 9.2.1 (all sections + all figures + all tables)
Section 9.2.2 (all sections + all figures + all tables)
Section 9.2.5 (all text, tables, and figures)
Section 9.2.7 (all text, tables, and figures)
Section 9.2.8 (all text, tables, and figures)
Section 9.3.3.3
Section 9.5.1.1 (based on RAI 406, Question 9.2.2-112)
14.2.12.5 (Include the whole section since it is all the tests for various water systems)
Chapter 16, TS 3.7.7 + Bases TS 3.7.8 (not the entire chapter)
Chapter 16, TS 3.7.8 + Bases TS 3.7.8 (not the entire chapter)
Chapter 16, TS 3.7.9 + Bases TS 3.7.9
Chapter 16, section 3.7.19 (TS and Bases documents for UHS

Response to Question 09.02.01-51:

U.S. EPR FSAR, Interim Revision 3 markups will be provided for the U.S. EPR FSAR sections, tables, and figures listed in Table 09.02.01-51-1.

These U.S. EPR FSAR, Interim Revision 3 markups support previously-submitted RAI responses.

FSAR Impact:

The U.S. EPR FSAR will not be changed as a result of this question.

Table 09.02.01-51-1—List of U.S. EPR FSAR Markup Sections

U.S. EPR FSAR Section/Table/Figure
Tier 1, Section 2.7.1 (all text, tables, and figures)
Tier 1, Section 2.7.2 (all text, tables, and figures)
Tier 1, Section 2.7.11 (all text, tables, and figures)
Tier 1, Section 4.6
Tier 1, Section 4.7
Tier 2, Table 1.8-1
Tier 2, Table 2.1-1
Tier 2, Section 2.3.1.2
Tier 2, Table 3.2.2-1
Tier 2, Section 3.4.3.3
Tier 2, Section 3.8.4.7
Tier 2, Figure 3.8-101
Tier 2, Table 3.9.6-2
Tier 2, Table 3.10-1
Tier 2, Table 3.11-1
Tier 2, Table 6.2.4-1
Tier 2, Section 7.6.1.2.3
Tier 2, Section 9.2.1 (all text, tables, and figures)
Tier 2, Section 9.2.2 (all text, tables, and figures)
Tier 2, Section 9.2.5 (all text, tables, and figures)
Tier 2, Section 9.2.7 (all text, tables, and figures)
Tier 2, Section 9.2.8 (all text, tables, and figures)
Tier 2, Section 9.3.3.3
Tier 2, Section 9.5.1.1
Tier 2, Section 14.2.12.5
Tier 2, Chapter 16, TS 3.7.7 and Bases TS 3.7.7
Tier 2, Chapter 16, TS 3.7.8 and Bases TS 3.7.8
Tier 2, Chapter 16, TS 3.7.9 and Bases TS 3.7.9
Tier 2, Chapter 16, Section 3.7.19 (TS and Bases)

U.S. EPR Final Safety Analysis Report Markups

2.7 Support Systems

2.7.1 Component Cooling Water System

1.0 Description

The component cooling water system (CCWS) is a safety related closed loop cooling water system comprising four divisions that remove heat generated from safety related and non-safety related components connected to the CCWS. Heat transferred from these components to the CCWS is rejected to the essential service water system (ESWS) via the component cooling water heat exchangers.

The CCWS provides the following significant safety related functions:

- The CCWS provides the transport of the heat from the safety injection system (SIS) and residual heat removal system (RHRS) to the ESWS.
- The CCWS provides the cooling of the thermal barrier of the reactor coolant pump (RCP) seals during all plant operating modes when the RCPs are running. There is a cross-connect in the header that supplies cooling to the RCP thermal barriers to allow thermal barrier cooling from either CCWS Common 1.b or 2.b headers. The cross-connect is inside containment, downstream of the CIVs on each of the Common 1.b and 2.b headers.
- The CCWS provides heat removal from the safety chilled water system (SCWS) divisions 2 and 3.
- The CCWS provides the removal of the decay heat from the fuel pool cooling water heat exchanger.
- The CCWS containment isolation valves close upon receipt of a containment isolation signal.

The CCWS provides the following significant non-safety-related functions:

- The non-safety-related dedicated CCWS train removes heat from the severe accident heat removal system (SAHRS).

2.0 Arrangement

2.1 The functional arrangement of the CCWS is as shown on Figure 2.7.1-1—Component Cooling Water System Functional Arrangement.

2.2 The location of CCWS equipment is as listed in Table 2.7.1-1—Component Cooling Water System Equipment Mechanical Design.

2.3 Physical separation exists between divisions of the CCWS.

3.0 Mechanical Design Features

3.1 Deleted.

3.2 Check valves will function as listed in Table 2.7.1-1.

3.3 Deleted.

3.4 Components identified as Seismic Category I in Table 2.7.1-1 can withstand seismic design basis loads without a loss of the function listed in Table 2.7.1-1.

3.5 Deleted.

3.6 Deleted.

3.7 Deleted.

3.8 Deleted.

3.9 CCWS piping shown as ASME Code Section III on Figure 2.7.1-1 is designed in accordance with ASME Code Section III requirements.

3.10 CCWS piping shown as ASME Code Section III on Figure 2.7.1-1 is installed in accordance with an ASME Code Section III Design Report.

3.11 Pressure boundary welds in CCWS piping shown as ASME Code Section III on Figure 2.7.1-1 are in accordance with ASME Code Section III.

3.12 CCWS piping shown as ASME Code Section III on Figure 2.7.1-1 retains pressure boundary integrity at design pressure.

3.13 Deleted.~~CCWS piping shown as ASME Code Section III on Figure 2.7.1-1 is installed and inspected in accordance with ASME Code Section III requirements.~~

3.14 Components listed in Table 2.7.1-1 as ASME Code Section III are designed in accordance with ASME Code Section III requirements.

3.15 Components listed in Table 2.7.1-1 as ASME Code Section III are fabricated in accordance with ASME Code Section III requirements.

3.16 Pressure boundary welds on components listed in Table 2.7.1-1 as ASME Code Section III are in accordance with ASME Code Section III requirements.

3.17 Components listed in Table 2.7.1-1 as ASME Code Section III retain pressure boundary integrity at design pressure.

3.18 Components listed in Table 2.7.1-1 as ASME Code Section III are installed in accordance with ASME Code Section III requirements.

4.0 I&C Design Features, Displays and Controls

4.1 Displays listed in Table 2.7.1-2—Component Cooling Water System Equipment I&C and Electrical Design are retrievable in the main control room (MCR) and the remote shutdown station (RSS) as listed in Table 2.7.1-2.

4.2 The CCWS equipment controls are provided in the MCR and the RSS as listed in Table 2.7.1-2.

4.3 Equipment listed as being controlled by a priority and actuator control system (PACS) module in Table 2.7.1-2 responds to the state requested by a test signal.

4.4 A CCWS low flow condition automatically opens the low head safety injection (LHSI)/residual heat removal (RHR) heat exchanger (HX) inlet valve.

4.5 A surge tank level of MIN3 automatically isolates the associated train common header switchover valves.

4.6 A surge tank level of MIN4 automatically trips the associated CCWS pump and unlocks the common header switchover function to allow restoration of flow to the common users.~~Deleted.~~

4.7 A low surge tank level and a flow rate difference between the supply and return from the Nuclear Auxiliary Building (NAB) and the Radioactive Waste Building (RWB) automatically isolates the non-safety-related branch.

4.8 Loss of one CCWS train initiates an automatic switchover to allow cooling of the common ‘a’ and/or ‘b’ headers.

4.9 Deleted.

4.10 CCWS train separation to RCP thermal barriers is maintained by interlocks provided on the supply and return thermal barrier containment isolation valves. The interlocks require that CIVs associated with one common header be closed before the other common header CIVs can be opened.

4.11 Manual or automatic actuation of a CCWS pump automatically actuates the corresponding ESWS pump.

4.12 Upon receipt of a SIS, the four CCWS trains are started, supplying SIS pump coolers and the four LHSI heat exchangers. The non-safety-related users outside of the Reactor Building are also isolated. The following CCWS actuations are automatically initiated:

- Start operable CCWS pumps (KAA10/20/30/40 AP001), if not previously running.
- Open LHSI HX isolation valves (KAA 12/22/32/43 AA005).
- Open LHSI pump seal cooler isolation valves (KAA22/32 AA013).
- Close isolation valves for non-safety-related users outside of the Reactor Building (KAB50 AA001/004/0006 and KAB80 AA015/016/019).

5.0 Electrical Power Design Features

5.1 The components designated as Class 1E in Table 2.7.1-2 are powered from the Class 1E division as listed in Table 2.7.1-2 in a normal or alternate feed condition.

5.2 Valves listed in Table 2.7.1-2 fail as-is on loss of power.

6.0 Environmental Qualifications

6.1 Components in Table 2.7.1-2, that are designated as harsh environment, will perform the function listed in Table 2.7.1-1 in the environments that exist during and following design basis events.

7.0 Equipment and System Performance

7.1 The CCWS heat exchangers as listed in Table 2.7.1-1 have the capacity to transfer the design heat load to the ESWS.

7.2 The pumps listed in Table 2.7.1-1 have net positive suction head available (NPSHA) that is greater than net positive suction head required (NPSHR) at system run-out flow.

7.3 The CCWS delivers water to the LHSI/RHRS heat exchangers to provide cooling.

7.4 The CCWS delivers water to the RCP thermal barrier ~~seals~~ coolers at the required flow from Common 1.b header and also from Common 2.b header.

7.5 The CCWS delivers water to Divisions 2 and 3 of the SCWS chiller heat exchangers.

7.6 The CCWS delivers water to the spent fuel pool cooling heat exchangers.

7.7 Class 1E valves listed in Table 2.7.1-2 can perform the function listed in Table 2.7.1-1 under system operating conditions.

7.8 The CCWS provides for flow testing of CCWS pumps during plant operation.

7.9 Containment isolation valves listed in Table 2.7.1-1 close within the containment isolation response time following initiation of a containment isolation signal.

7.10 The CCWS surge tanks provide adequate capacity for system operation.

7.11 Each CCWS surge tank maintains a reserve volume of 750 gallons to accommodate potential total train leakage of 4 gallons per hour for 7 days of continuous operation with no makeup source available.

8.0 System Inspections, Tests, Analyses, and Acceptance Criteria

Table 2.7.1-3 lists the CCWS ITAAC.

Table 2.7.1-1—Component Cooling Water System Equipment Mechanical Design (7 Sheets)

Description	Tag Number (1)	Location	ASME Code Section III	Function	Seismic Category
Component Cooling Water Pumps	KAA10AP001 KAA20AP001 KAA30AP001 KAA40AP001	Safeguard Building 1 Safeguard Building 2 Safeguard Building 3 Safeguard Building 4	Yes	Run	I
Heat Exchangers	KAA10AC001 KAA20AC001 KAA30AC001 KAA40AC001	Safeguard Building 1 Safeguard Building 2 Safeguard Building 3 Safeguard Building 4	Yes	Heat Transfer Device	I
Surge Tanks	KAA10BB001 KAA20BB001 KAA30BB001 KAA40BB001	Safeguard Building 1 Safeguard Building 2 Safeguard Building 3 Safeguard Building 4	Yes	Provide the following: 1. Pump NPSH 2. Adequate Surge Volume 3. Makeup Volume for normal leakage	I
CCWS Pump/Heat Exchanger Downstream Check Valves	KAA10AA004 KAA20AA004 KAA30AA004 KAA40AA004	Safeguard Building 1 Safeguard Building 2 Safeguard Building 3 Safeguard Building 4	Yes	Prevent Backflow	I
Heat Exchanger Bypass Valves	KAA10AA112 KAA20AA112 KAA30AA112 KAA40AA112	Safeguard Building 1 Safeguard Building 2 Safeguard Building 3 Safeguard Building 4	Yes	Temperature control	I

Table 2.7.1-1—Component Cooling Water System Equipment Mechanical Design (7 Sheets)

Description	Tag Number (1)	Location	ASME Code Section III	Function	Seismic Category
Surge Tank Demin. Water Makeup Isolation Valves	KAA10AA027 KAA20AA027 KAA30AA027 KAA40AA027	Safeguard Building 1 Safeguard Building 2 Safeguard Building 3 Safeguard Building 4	Yes	Open/Close	I
Train Switchover Valves	KAA10AA033 KAA10AA032 KAA20AA033 KAA20AA032	Safeguard Building 1 Safeguard Building 1 Safeguard Building 2 Safeguard Building 2	Yes	Open/Close	I
Train Switchover Valves	KAA30AA033 KAA30AA032 KAA40AA033 KAA40AA032	Safeguard Building 3 Safeguard Building 3 Safeguard Building 4 Safeguard Building 4	Yes	Open/Close	I
Train Switchover Valves	KAA10AA006 KAA10AA010 KAA20AA006 KAA20AA010	Safeguard Building 1 Safeguard Building 1 Safeguard Building 2 Safeguard Building 2	Yes	Open/Close	I
Train Switchover Valves	KAA30AA006 KAA30AA010 KAA40AA006 KAA40AA010	Safeguard Building 3 Safeguard Building 3 Safeguard Building 4 Safeguard Building 4	Yes	Open/Close	I

Table 2.7.1-1—Component Cooling Water System Equipment Mechanical Design (7 Sheets)

Description	Tag Number (1)	Location	ASME Code Section III	Function	Seismic Category
LHSI HX Isolation Valves	KAA12AA005 KAA22AA005 KAA32AA005 KAA42AA005	Safeguard Building 1 Safeguard Building 2 Safeguard Building 3 Safeguard Building 4	Yes	Open	I
LHSI Pump Seal Cooler Isolation Valves	KAA22AA013 KAA32AA013	Safeguard Building 2 Safeguard Building 3	Yes	Open	I
CCWS to Low Head Safety Injection Heat Exchanger Downstream Check Valves	KAA12AA012 KAA22AA012 KAA32AA012 KAA42AA012	Safeguard Building 1 Safeguard Building 2 Safeguard Building 3 Safeguard Building 4	Yes	Prevent Backflow	I
CCWS to Low Head Safety Injection Pump Seal Fluid Cooler Downstream Check Valves	KAA22AA014 KAA32AA014	Safeguard Building 2 Safeguard Building 3	Yes	Prevent Backflow	I
Safety Chilled Water Chiller CCWS Flow Control Valves	KAA22AA101 KAA32AA101	Safeguard Building 2 Safeguard Building 3	Yes	Open/Close	I
Common Header 1.a Fuel Pool Cooling Heat Exchanger 1 Downstream Control Valve	KAB10AA134	Fuel Building	Yes	Open/Close	I
Common Header 2.a Fuel Pool Cooling Heat Exchanger 2 Downstream Control Valve	KAB20AA134	Fuel Building	Yes	Open/Close	I

Table 2.7.1-1—Component Cooling Water System Equipment Mechanical Design (7 Sheets)

Description	Tag Number (1)	Location	ASME Code Section III	Function	Seismic Category
Common Header 1.b RCP Thermal Barriers Containment Isolation Valves	KAB30AA049 KAB30AA050 KAB30AA051 KAB30AA052	Safeguard Building 1 Reactor Building Reactor Building Safeguard Building 1	Yes	Close (Manually Initiated)	I
~~Common Header 1.b RCP Thermal Barriers 1/2 Upstream Containment Isolation Check Valve~~	~~KAB30AA050~~	~~Reactor Building~~	~~Yes~~	~~Prevent Backflow~~	~~I~~
Common Header 2.b RCP Thermal Barriers Containment Isolation Valves	KAB30AA053 KAB30AA054 KAB30AA055 KAB30AA056	Safeguard Building 4 Reactor Building Reactor Building Safeguard Building 4	Yes	Close (Manually Initiated)	I
~~Common Header 2.b Containment Supply Isolation Check Valve~~	~~KAB30AA054~~	~~Reactor Building~~	~~Yes~~	~~Close~~	~~I~~
Common Header 1.b Non-Safety Loads Containment Isolation Valves	KAB40AA001 KAB40AA006 KAB40AA012	Safeguard Building 1 Reactor Building Safeguard Building 1	Yes	Close	I
Common Header 1.b Containment Supply Isolation Check Valve	KAB40AA002	Reactor Building	Yes	Close	I
Common Header 2.b Auxiliary Building and Waste Building Isolation Valves	KAB50AA001 KAB50AA006 KAB50AA004	Safeguard Building 4 Safeguard Building 4 Safeguard Building 4	Yes	Close	I
Common Header 2.b Auxiliary and Waste Building Return Isolation Check Valve	KAB50AA008	Safeguard Building 4	Yes	Close	I

Table 2.7.1-1—Component Cooling Water System Equipment Mechanical Design (7 Sheets)

Description	Tag Number (1)	Location	ASME Code Section III	Function	Seismic Category
Common Header 1.b Safety-Related Containment Isolation Valves	KAB60AA013 KAB60AA018 KAB60AA019	Safeguard Building 1 Reactor Building Safeguard Building 1	Yes	Close	I
Common Header 1.b CVCS HP Cooler 1 and RCP Coolers 1/2 Containment Supply Isolation Check Valve	KAB60AA014	Reactor Building	Yes	Prevent Backflow	I
Common Header 1.b CVCS HP Cooler 1 Downstream Control Valve	KAB60AA116	Reactor Building	Yes	Close	I
Common Header 2.b Safety-Related Loads Containment Isolation Valves	KAB70AA013 KAB70AA018 KAB70AA019	Safeguard Building 4 Reactor Building Safeguard Building 4	Yes	Close	I
Common Header 2.b Containment Supply Isolation Check Valve	KAB70AA014	Reactor Building	Yes	Prevent Backflow	I
Common Header 2.b CVCS HP Cooler 2 Downstream Control Valve	KAB70AA116	Reactor Building	Yes	Close	I
Common Header 1.b Auxiliary Building Isolation Valves	KAB80AA015 KAB80AA016	Safeguard Building 1 Safeguard Building 1	Yes	Close	I
Common Header 1.b Auxiliary Building Isolation Valve	KAB80AA019	Safeguard Building 1	Yes	Close	I
Common Header 1.b Nuclear Auxiliary Building Downstream Check Valve	KAB80AA020	Safeguard Building 1	Yes	Close	I
Dedicated CCWS Surge Tank Isolation Valve	KAA80AA020	Safeguard Building 4	No	Open	N/A

Table 2.7.1-1—Component Cooling Water System Equipment Mechanical Design (7 Sheets)

Description	Tag Number (1)	Location	ASME Code Section III	Function	Seismic Category
Dedicated CCWS Surge Tank Nitrogen Supply Valve	KAA80AA021	Safeguard Building 4	No	Open	N/A
Dedicated CCWS Demin Water Makeup Water Supply Valve	KAA80AA202	Safeguard Building 4	No	Open	N/A
Dedicated CCWS Pump	KAA80AP001	Safeguard Building 4	No	Run	N/A
Dedicated CCWS Demin Water Makeup Pump	KAA80AP201	Safeguard Building 4	No	Run	N/A
Dedicated CCWS Heat Exchanger	KAA80AC001	Safeguard Building 4	No	Heat Transfer Device	N/A
Dedicated CCWS Surge Tank	KAA80BB001	Safeguard Building 4	No	Provide the following: 1. Pump NPSH 2. Adequate surge volume 3. Makeup volume for normal leakage	N/A
Train 1 Surge Tank Makeup Isolation Valves	KAA10AA141 KAA10AA142	Safeguard Building 1 Safeguard Building 1	Yes	Open	I
Train 2 Surge Tank Makeup Isolation Valves	KAA20AA141 KAA20AA142	Safeguard Building 2 Safeguard Building 2	Yes	Open	I
Train 3 Surge Tank Makeup Isolation Valves	KAA30AA141 KAA30AA142	Safeguard Building 3 Safeguard Building 3	Yes	Open	I
Train 4 Surge Tank Makeup Isolation Valves	KAA40AA141 KAA40AA142	Safeguard Building 4 Safeguard Building 4	Yes	Open	I

1) Equipment tag numbers are provided for information only and are not part of the certified design.

Table 2.7.1-2—Component Cooling Water System Equipment I&C and Electrical Design (7 Sheets)

Description	Tag Number (1)	Location	IEEE Class 1E (2)	EQ – Harsh Env.	PACS	MCR/RSS Displays	MCR/RSS Controls
Component Cooling Water Pumps	KAA10AP001 KAA20AP001 KAA30AP001 KAA40AP001	Safeguard Building 1 Safeguard Building 2 Safeguard Building 3 Safeguard Building 4	1 2 3 4	Yes	Yes	On-Off	Start-Stop
Train Switchover Valves	KAA10AA006 KAA10AA010 KAA10AA032 KAA10AA033	Safeguard Building 1	NA (3)	Yes	Yes	Pos	Open-Close
Train Switchover Valves	KAA20AA006 KAA20AA010 KAA20AA032 KAA20AA033	Safeguard Building 2	NA (3)	Yes	Yes	Pos	Open-Close
Train Switchover Valves	KAA30AA006 KAA30AA010 KAA30AA032 KAA30AA033	Safeguard Building 3	NA (3)	Yes	Yes	Pos	Open-Close
Train Switchover Valves	KAA40AA006 KAA40AA010 KAA40AA032 KAA40AA033	Safeguard Building 4	NA (3)	Yes	Yes	Pos	Open-Close
Heat Exchanger Bypass Valve	KAA10AA112	Safeguard Building 1	1^N 2^A	Yes	Yes	Pos	Open-Close
Heat Exchanger Bypass Valve	KAA20AA112	Safeguard Building 2	2^N 1^A	Yes	Yes	Pos	Open-Close

Table 2.7.1-2—Component Cooling Water System Equipment I&C and Electrical Design (7 Sheets)

Description	Tag Number (1)	Location	IEEE Class 1E (2)	EQ – Harsh Env.	PACS	MCR/RSS Displays	MCR/RSS Controls
Heat Exchanger Bypass Valve	KAA30AA112	Safeguard Building 3	3^N 4^A	Yes	Yes	Pos	Open-Close
Heat Exchanger Bypass Valve	KAA40AA112	Safeguard Building 4	4^N 3^A	Yes	Yes	Pos	Open-Close
Surge Tank Level	KAA10CL094	Safeguard Building 1	1	N/A	No	Level	NA / NA
Surge Tank Level	KAA10CL099	Safeguard Building 1	1	N/A	No	Level	NA / NA
Surge Tank Level	KAA20CL094	Safeguard Building 2	2	N/A	No	Level	NA / NA
Surge Tank Level	KAA20CL099	Safeguard Building 2	2	N/A	No	Level	NA / NA
Surge Tank Level	KAA30CL094	Safeguard Building 3	3	N/A	No	Level	NA / NA
Surge Tank Level	KAA30CL099	Safeguard Building 3	3	N/A	No	Level	NA / NA
Surge Tank Level	KAA40CL094	Safeguard Building 4	4	N/A	No	Level	NA / NA
Surge Tank Level	KAA40CL099	Safeguard Building 4	4	N/A	No	Level	NA / NA
LHSI HX Isolation Valve	KAA12AA005	Safeguard Building 1	1^N 2^A	Yes	Yes	Pos	Open-Close
LHSI HX Isolation Valve	KAA22AA005	Safeguard Building 2	2^N 1^A	Yes	Yes	Pos	Open-Close
LHSI HX Isolation Valve	KAA32AA005	Safeguard Building 3	3^N 4^A	Yes	Yes	Pos	Open-Close
LHSI HX Isolation Valve	KAA42AA005	Safeguard Building 4	4^N 3^A	Yes	Yes	Pos	Open-Close

Table 2.7.1-2—Component Cooling Water System Equipment I&C and Electrical Design (7 Sheets)

Description	Tag Number (1)	Location	IEEE Class 1E (2)	EQ – Harsh Env.	PACS	MCR/RSS Displays	MCR/RSS Controls
LHSI Pump Seal Cooler Isolation Valve	KAA22AA013	Safeguard Building 2	2^N 1^A	Yes	Yes	Pos	Open-Close
LHSI Pump Seal Cooler Isolation Valve	KAA32AA013	Safeguard Building 3	3^N 4^A	Yes	Yes	Pos	Open-Close
Common Header 2.b Auxiliary Building and Waste Building Isolation Valves	KAB50AA001 KAB50AA004 KAB50AA006	Safeguard Building 4	NA(3)	N/A	Yes	Pos	Open-Close
Common Header 1.b Auxiliary Building Isolation Valves	KAB80AA015 KAB80AA016 KAB80AA019	Safeguard Building 1	NA(3)	N/A	Yes	Pos	Open-Close
Common Header 1.b Non-Safety Loads Containment Isolation Valves	KAB40AA001 KAB40AA006 KAB40AA012	Safeguard Building 1 Safeguard Building 1 Reactor Building	1^N 2^A 1^N 2^A 4^N 3^A	Yes	Yes	Pos	Open-Close

Table 2.7.1-2—Component Cooling Water System Equipment I&C and Electrical Design (7 Sheets)

Description	Tag Number (1)	Location	IEEE Class 1E (2)	EQ – Harsh Env.	PACS	MCR/RSS Displays	MCR/RSS Controls
Common Header 1.b Safety Related Loads Containment Isolation Valves	KAB60AA013	Safeguard Building 1	1^N 2^A	Yes	Yes	Pos	Open-Close
	KAB60AA018	Reactor Building	4^N 3^A				
	KAB60AA019	Safeguard Building 1	1^N 2^A				
Common Header 2.b Safety Related Loads Containment Isolation Valves	KAB70AA013	Safeguard Building 4	4^N 3^A	Yes	Yes	Pos	Open-Close
	KAB70AA018	Reactor Building	1^N 2^A				
	KAB70AA019	Safeguard Building 4	4^N 3^A				
Common Header 1.b RCP Thermal Barriers Containment Isolation Valves	KAB30AA049	Safeguard Building 1	1^N 2^A	Yes	Yes	Pos	Open-Close
	KAB30AA050	Reactor Building	4^N 3^A				
	KAB30AA051	Reactor Building	4^N 3^A				
	KAB30AA052	Safeguard Building 1	1^N 2^A				

Table 2.7.1-2—Component Cooling Water System Equipment I&C and Electrical Design (7 Sheets)

Description	Tag Number (1)	Location	IEEE Class 1E (2)	EQ – Harsh Env.	PACS	MCR/RSS Displays	MCR/RSS Controls
Common Header 2.b RCP Thermal Barriers Containment Isolation Valves	KAB30AA053	Safeguard Building 4	4^N 3^A	Yes	Yes	Pos	Open-Close
	KAB30AA054	Reactor Building	1^N 2^A				
	KAB30AA055	Reactor Building	1^N 2^A				
	KAB30AA056	Safeguard Building 4	4^N 3^A				
Surge Tank Demin. Water Makeup Isolation Valves	KAA10AA027	Safeguard Building 1	1^N 2^A	N/A	Yes	Pos	Open-Close
	KAA20AA027	Safeguard Building 2	2^N 1^A				
	KAA30AA027	Safeguard Building 3	3^N 4^A				
	KAA40AA027	Safeguard Building 4	4^N 3^A				
Common Header 1.a Fuel Pool Cooling Heat Exchanger 1 Downstream Control Valve	KAB10AA134	Fuel Building	1^N 2^A	N/A	Yes	NA / NA	NA / NA

Table 2.7.1-2—Component Cooling Water System Equipment I&C and Electrical Design (7 Sheets)

Description	Tag Number (1)	Location	IEEE Class 1E (2)	EQ – Harsh Env.	PACS	MCR/RSS Displays	MCR/RSS Controls
Common Header 2.a Fuel Pool Cooling Heat Exchanger 2 Downstream Control Valve	KAB20AA134	Fuel Building	4^{N} 3^{A}	N/A	Yes	NA / NA	NA / NA
Common Header 1.b Safety Related Loads CVCS HP Cooler 1 Downstream Control Valve	KAB60AA116	Reactor Building	NA	N/A	Yes	Pos	Open-Close
Common Header 2.b Safety Related Loads CVCS HP Cooler 2 Downstream Control Valve	KAB70AA116	Reactor Building	NA	N/A	Yes	Pos	Open-Close
Dedicated CCWS Surge Tank Isolation Valve	KAA80AA020	Safeguard Building 4	4 (4)	N/A	Yes	Pos	Open-Close
Dedicated CCWS Surge Tank Nitrogen Supply Valve	KAA80AA021	Safeguard Building 4	4 (4)	N/A	Yes	Pos	Open-Close
Dedicated CCWS Demin Water Makeup Water Supply Valve	KAA80AA202	Safeguard Building 4	4 (4)	N/A	Yes	Pos	Open-Close

Table 2.7.1-2—Component Cooling Water System Equipment I&C and Electrical Design (7 Sheets)

Description	Tag Number (1)	Location	IEEE Class 1E (2)	EQ – Harsh Env.	PACS	MCR/RSS Displays	MCR/RSS Controls
Dedicated CCWS Pump	KAA80AP001	Safeguard Building 4	4 (4)	N/A	Yes	On-Off / NA	Start-Stop / NA
Dedicated CCWS Demin Water Makeup Pump	KAA80AP201	Safeguard Building 4	4 (4)	N/A	Yes	On-Off / NA	Start-Stop / NA
Safety Chilled Water Chiller CCWS Flow Control Valve	KAA22AA101	Safeguard Building 2	2^N 1^A	N/A	Yes	NA / NA	NA / NA
Safety Chilled Water Chiller CCWS Flow Control Valve	KAA32AA101	Safeguard Building 3	3^N 4^A	N/A	Yes	NA / NA	NA / NA

1) Equipment tag numbers are provided for information only and are not part of the certified design.

2) ^{N} denotes the division the component is normally powered from; ^{A} denotes the division the component is powered from when alternate feed is implemented.

3) Each hydraulically operated valve has multiple solenoid-operated pilot valves and hydraulic fluid pumps. Pilot valves and hydraulic fluid pumps are powered from different Class 1E divisions to provide redundancy. ~~Each pilot valve is powered from a different Class 1E uninterruptible power supply division to provide redundancy.~~

4) Dedicated components are non-Class 1E components but are powered from the Class 1E division as shown.

Table 2.7.1-3—Component Cooling Water System ITAAC (8 Sheets)

Commitment Wording		Inspections, Tests, Analyses	Acceptance Criteria
2.1	The functional arrangement of the CCWS is as shown on Figure 2.7.1-1.	Inspections of the as-built system will be conducted.	The as-built CCWS conforms to the functional arrangement as shown on Figure 2.7.1-1.
2.2	The location of CCWS equipment is as listed in Table 2.7.1-1.	An inspection will be performed of the location of the equipment listed in Table 2.7.1-1.	The equipment listed in Table 2.7.1-1 is located as listed in Table 2.7.1-1.
2.3	Physical separation exists between redundant divisions of the CCWS.	An inspection will be performed to verify that redundant divisions of the CCWS are located in separate Safeguard Buildings.	The equipment listed in Table 2.7.1-1 is located as listed in Table 2.7.1-1.
3.1	Deleted.	Deleted.	Deleted.
3.2	Check valves listed in Table 2.7.1-1 will function as listed in Table 2.7.1-1.	Tests will be performed for the operation of the check valves listed in Table 2.7.1-1.	The check valves listed in Table 2.7.1-1 perform the functions listed in Table 2.7.1-1.
3.3	Deleted.	Deleted.	Deleted.
3.4	Components identified as Seismic Category I in Table 2.7.1-1 can withstand seismic design basis loads without a loss of the function listed in Table 2.7.1-1.	a. Type tests, analyses, or a combination of type tests and analyses will be performed on the components identified as Seismic Category I in Table 2.7.1-1 using analytical assumptions, or under conditions, which bound the Seismic Category I design requirements.	a. Seismic qualification reports (SQDP, EQDP, or analyses) exist and conclude that the Seismic Category I components identified in Table 2.7.1-1 can withstand seismic design basis loads without a loss of the function listed in Table 2.7.1-1 including the time required to perform the listed function.

Table 2.7.1-3—Component Cooling Water System ITAAC (8 Sheets)

Commitment Wording		Inspections, Tests, Analyses	Acceptance Criteria
		b. Inspections will be performed of the Seismic Category I components identified in Table 2.7.1-1 to verify that the components, including anchorage, are installed as specified on the construction drawings and deviations have been reconciled to the seismic qualification reports (SQDP, EQDP, or analyses).	b. Inspection reports exist and conclude that the Seismic Category I components identified in Table 2.7.1-1, including anchorage, are installed as specified on the construction drawings and deviations have been reconciled to the seismic qualification reports (SQDP, EQDP, or analyses).
3.5	Deleted.	Deleted.	Deleted.
3.6	Deleted.	Deleted.	Deleted.
3.7	Deleted.	Deleted.	Deleted.
3.8	Deleted.	Deleted.	Deleted.
3.9	CCWS piping shown as ASME Code Section III on Figure 2.7.1-1 is designed in accordance with ASME Code Section III requirements.	Inspections of the ASME Code Section III Design Reports (NCA-3550) and associated reference documents will be performed. **{{DAC}}**	ASME Code Section III Design Reports (NCA-3550) exist and conclude that CCWS piping shown as ASME Code Section III on Figure 2.7.1-1 complies with ASME Code Section III requirements. **{{DAC}}**
3.10	CCWS piping shown as ASME Code Section III on Figure 2.7.1-1 is installed in accordance with an ASME Code Section III Design Report.	Analyses to reconcile as-built deviations to the ASME Code Design Reports (NCA-3550) will be performed. ~~Piping analyzed using time-history methods will be reconciled to the as-built information.~~	For CCWS piping shown as ASME Code Section III on Figure 2.7.1-1, ASME Code Data Reports (N-5) exist and conclude that design reconciliation (NCA-3554) has been completed in accordance with the ASME Code Section III for the as-built system. The report(s) document the as-built condition.

Table 2.7.1-3—Component Cooling Water System ITAAC (8 Sheets)

Commitment Wording		Inspections, Tests, Analyses	Acceptance Criteria
3.11	Pressure boundary welds in CCWS piping shown as ASME Code Section III on Figure 2.7.1-1 are in accordance with ASME Code Section III.	Inspections of pressure boundary welds verify that welding is performed in accordance with ASME Code Section III requirements.	ASME Code Section III Data Reports exist and conclude that pressure boundary welding for CCWS piping shown as ASME Code Section III on Figure 2.7.1-1 has been performed in accordance with ASME Code Section III.
3.12	CCWS piping shown as ASME Code Section III on Figure 2.7.1-1 retains pressure boundary integrity at design pressure.	Hydrostatic tests will be performed on the system.	For CCWS piping shown as ASME Code Section III on Figure 2.7.1-1, ASME Code Section III Data Reports exist and conclude that hydrostatic test results comply with ASME Code Section III requirements.
3.13	Deleted.~~CCWS piping shown as ASME Code Section III on Figure 2.7.1-1 is installed and inspected in accordance with ASME Code Section III requirements.~~	Deleted.~~An inspection of the as-built piping will be performed.~~	Deleted.~~For as-built CCWS piping shown as ASME Code Section III on Figure 2.7.1-1, N-5 Data Reports exist and conclude that installation and inspection are in accordance with ASME Code Section III requirements.~~
3.14	Components listed in Table 2.7.1-1 as ASME Code Section III are designed in accordance with ASME Code Section III requirements.	Inspections of ASME Code Section III Design Reports and associated reference documents will be performed.~~Inspections will be performed for the existence of ASME Code Section III Design Reports.~~	ASME Code Section III Design Reports (NCA-3550) exist and conclude that components listed as ASME Code Section III in Table 2.7.1-1 comply with ASME Code Section III requirements.~~ASME Code Section III Design Reports (NCA-3550) exist for components listed as ASME Code Section III in Table 2.7.1-1.~~

Table 2.7.1-3—Component Cooling Water System ITAAC (8 Sheets)

Commitment Wording		Inspections, Tests, Analyses	Acceptance Criteria
3.15	Components listed in Table 2.7.1-1 as ASME Code Section III are fabricated in accordance with ASME Code Section III requirements.	An analysis will be performed to verify that deviations to the component design reports (NCA-3550) have been reconciled.~~Inspections will be performed to verify that the design report has been revised to reflect as-built deviations from the design if applicable.~~	ASME Code Section III Design Reports (NCA-3550) exist and conclude that components listed as ASME Code Section III in Table 2.7.1-1 comply with ASME Code Section III requirements and any deviations to the design report have been reconciled.~~For components listed as ASME Code Section III in Table 2.7.1-1, the as-built component satisfies design requirements of ASME Code Section III as demonstrated in the Design Report (NCA-3550).~~
3.16	Pressure boundary welds on components listed in Table 2.7.1-1 as ASME Code Section III are in accordance with ASME Code Section III requirements.	Inspections of pressure boundary welds will be performed to verify that welding is performed in accordance with ASME Code Section III requirements.	For components listed as ASME Code Section III in Table 2.7.1-1, ASME Code Section III Data Reports (NCA-8000) exist and conclude that pressure boundary welding has been performed in accordance with ASME Code Section III.
3.17	Components listed in Table 2.7.1-1 as ASME Code Section III retain pressure boundary integrity at design pressure.	Hydrostatic tests will be performed on the components.	For components listed as ASME Code Section III in Table 2.7.1-1, ASME Code Section III Data Reports exist and conclude that hydrostatic test results comply with ASME Code Section III requirements.
3.18	Components listed in Table 2.7.1-1 as ASME Code Section III are installed in accordance with ASME Code Section III requirements.	An inspection of ASME Code Data Reports will be performed.	ASME Code Section III N-5 Data Reports exist and conclude that components listed as ASME Code Section III in Table 2.7.1-1 have been installed in accordance with ASME Code Section III requirements.

Table 2.7.1-3—Component Cooling Water System ITAAC (8 Sheets)

Commitment Wording		Inspections, Tests, Analyses	Acceptance Criteria
4.1	Displays exist or can be retrieved in the MCR and the RSS as identified in Table 2.7.1-2.	Tests will be performed for the retrieveability of the displays in the MCR or the RSS as listed in Table 2.7.1-2.	a. The displays listed in Table 2.7.1-2 as being retrieved in the MCR can be retrieved in the MCR. b. The displays listed in Table 2.7.1-2 as being retrieved in the RSS can be retrieved in the RSS.
4.2	Controls exist in the MCR and the RSS as identified in Table 2.7.1-2.	Tests will be performed for the existence of control signals from the MCR and the RSS to the equipment listed in Table 2.7.1-2.	a. The controls listed in Table 2.7.1-2 as being in the MCR exist in the MCR. b. The controls listed in Table 2.7.1-2 as being in the RSS exist in the RSS.
4.3	Equipment listed as being controlled by a PACS module in Table 2.7.1-2 responds to the state requested by a test signal.	A test will be performed using test signals.	Equipment listed as being controlled by a PACS module in Table 2.7.1-2 responds to the state requested by the test signal.
4.4	A CCWS low flow condition automatically opens the LHSI/RHR HX inlet valve.	Tests will be performed using test signals to verify the interlock.	The following interlock responds as specified below when activated by a test signal: CCWS low flow condition automatically opens the LHSI/RHR HX inlet valve.
4.5	A surge tank level of MIN3 automatically isolates the associated train common header switchover valves.	Tests will be performed using test signals to verify the interlock.	The following interlock responds as specified below when activated by a test signal: Surge tank level of MIN3 automatically isolates the associated train common header switchover valves.

Table 2.7.1-3—Component Cooling Water System ITAAC (8 Sheets)

Commitment Wording		Inspections, Tests, Analyses	Acceptance Criteria
4.6	A surge tank level of MIN4 automatically trips the associated CCWS pump and unlocks the common header switchover function to allow restoration of flow to the common users.~~Deleted.~~	Tests will be performed using test signals to verify the interlock.~~Deleted.~~	The following interlocks respond as specified below when activated by a test signal: • Surge tank level MIN4 automatically trips the associated CCWS pump. • Surge tank level MIN4 unlocks the switchover sequence. This interlock to be verified by performing a switchover sequence in the interlock test for surge tank MIN4 level.~~Deleted.~~
4.7	A low surge tank level and a flow rate difference between the supply and return from NAB and RWB automatically isolates the non-safety related branch.	Tests will be performed using test signals to verify the interlock.	The following interlock responds as specified below when activated by a test signal: A low surge tank level and a ~~Flow~~ flow rate difference between the supply and return from NAB and RWB automatically isolates the non-safety related branch.
4.8	Loss of one CCWS train initiates an automatic switchover to allow cooling of the common “a” and/or “b” headers.	Tests will be performed using test signals to verify the interlock.	The following interlock responds as specified below when activated by a test signal: Loss of one CCWS train automatically initiates a switchover to allow cooling of the common “a” and/or “b” headers.
4.9	Deleted.	Deleted.	Deleted.

Table 2.7.1-3—Component Cooling Water System ITAAC (8 Sheets)

Commitment Wording		Inspections, Tests, Analyses	Acceptance Criteria
4.10	CCWS train separation to RCP thermal barriers is maintained by interlocks provided on the supply and return thermal barrier containment isolation valves. The interlocks require that CIVs associated with one common header be closed before the other common header CIVs can be opened.	Tests will be performed using test signals to verify the interlocks.	The following interlock responds as specified below when activated by a test signal: Thermal barrier CIVs associated with common header 1 fail to open while CIVs associated with common header 2 are opened and vice versa. Thermal barrier CIVs associated with common header 1 open when CIVs associated with common header 2 are closed and vice versa.
4.11	Manual or automatic actuation of a CCWS pump automatically actuates the corresponding ESWS pump.	Tests will be performed using test signals to verify the interlocks.	The following interlock responds as specified below when activated by a test signal: Actuation of a CCWS pump automatically actuates the corresponding ESWS pump.
4.12	Upon receipt of an SIS, the following CCWS actuations are automatically initiated: • Start operable CCWS pumps (KAA10/20/30/40 AP001), if not previously running. • Open LHSI HX isolation valves (KAA 12/22/32/43 AA005). • Open LHSI pump seal cooler isolation valves (KAA22/32 AA013). • Close isolation valves for non-safety-related users outside of the Reactor Building (KAB50 AA001/004/0006 and KAB80 AA015/016/019).	A test will be performed using test signals	The following components respond as specified below when activated by a safety injection test signal: • CCWS operable pumps (KAA10/20/30/40 AP001) start (if not previously running). • LHSI HX isolation valves (KAA12/22/32/43 AA005) open. • LHSI pump seal cooler isolation valves (KAA22/32 AA013) open. • Isolation valves for non-safety-related users outside of Reactor Building (KAB50 AA001/004/0006 and KAB80 AA015/016/019) close.

Table 2.7.1-3—Component Cooling Water System ITAAC (8 Sheets)

Commitment Wording		Inspections, Tests, Analyses	Acceptance Criteria
5.1	The components designated as Class 1E in Table 2.7.1-2 are powered from the Class 1E division as listed in Table 2.7.1-2 in a normal or alternate feed condition.	a. Testing will be performed for components designated as Class 1E in Table 2.7.1-2 by providing a test signal in each normally aligned division. b. Testing will be performed for components designated as Class 1E in Table 2.7.1-2 by providing a test signal in each division with the alternate feed aligned to the divisional pair.	a. The test signal provided in the normally aligned division is present at the respective Class 1E component identified in Table 2.7.1-2. b. The test signal provided in each division with the alternate feed aligned to the divisional pair is present at the respective Class 1E component identified in Table 2.7.1-2.
5.2	Valves listed in Table 2.7.1-2 fail as-is on loss of power.	Testing will be performed for the valves listed in Table 2.7.1-2 to fail as-is on loss of power.	Following loss of power, the valves listed in Table 2.7.1-2 fail as-is.
6.1	Components in Table 2.7.1-2, that are designated as harsh environment, will perform the function listed in Table 2.7.1-1 in the environments that exist during and following design basis events.	a. Type tests or type tests and analysis will be performed to demonstrate the ability of the components listed as harsh environment in Table 2.7.1-2 to perform the function listed in Table 2.7.1-1 for the environmental conditions that could occur during and following design basis events. b. Components listed as harsh environment in Table 2.7.1-2 will be inspected to verify installation in accordance with the construction drawings including the associated wiring, cables and terminations. Deviations to the construction drawings will be reconciled to the EQDP.	a. Environmental Qualification Data Packages (EQDP) exist and conclude that the components listed as harsh environment in Table 2.7.1-2 can perform the function listed in Table 2.7.1-1 during and following design basis events including the time required to perform the listed function. b. Inspection reports exists and conclude that the components listed in Table 2.7.1-2 as harsh environment has been installed per the construction drawings and any deviations have been reconciled to the EQDP.

Table 2.7.1-3—Component Cooling Water System ITAAC (8 Sheets)

Commitment Wording		Inspections, Tests, Analyses	Acceptance Criteria
7.1	The CCWS heat exchanger as listed in Table 2.7.1-1 has the capacity to transfer the design heat load to the ESWS system.	Tests and analyses will be performed to demonstrate the capability of the CCWS heat exchanger as listed in Table 2.7.1-1 to transfer the heat load to the ESWS.	~~The CCW heat exchanger satisfies the required heat transfer of an equivalent combined product of the heat exchanger area of 39963 ft^2 and the overall heat transfer coefficient of 360 BTU/hr*ft^2*°F.~~A report exists and concludes that the CCWS heat exchanger is capable of removing the DBA heat load of ~~291.8~~293.35 E+06 BTU/hr with a minimum additional margin of 10% above the specified 10% tube plugging allowance.
7.2	The pumps listed in Table 2.7.1-1 have NPSHA that is greater than NPSHR at system run-out flow.	Testing will be performed to verify NPSHA for pumps listed in Table 2.7.1-1.	The pumps listed in Table 2.7.1-1 have NPSHA that is greater than NPSHR at system run-out flow with consideration for minimum allowable surge tank water level (as corrected to account for actual temperature and atmospheric conditions).
7.3	The CCWS delivers water to the LHSI/RHRS heat exchangers to provide cooling.	Tests and analyses will be performed to determine the CCWS delivery rate under operating conditions.	The CCWS delivers at least a flowrate to each LHSI/RHR heat exchanger of 2.19 x 10^6 lb/hr.
7.4	The CCWS delivers water to the RCP thermal barrier coolers at the required flow from Common 1.b header and also from Common 2.b header.	Tests and analyses will be performed to determine the CCWS delivery rate under operating conditions.	The CCWS delivers at least a flowrate to the thermal barrier coolers of ~~0.0198~~0.0792 x 10^6 lb/hr from Common 1.b header and also from Common 2.b header.
7.5	The CCWS delivers water to Divisions 2 and 3 SCWS chiller heat exchangers.	Tests and analyses will be performed to determine the CCWS delivery rate under operating conditions.	The CCWS delivers at least a flowrate to the safety chilled water chillers of ~~0.373~~0.514 x 10^6 lb/hr.
7.6	The CCWS delivers water to the spent fuel pool heat exchangers.	Tests and analyses will be performed to determine the CCWS delivery rate under operating conditions.	The CCWS delivers at least a flowrate to the spent fuel pool cooling heat exchangers of 0.8818 x 10^6 lb/hr.

Table 2.7.1-3—Component Cooling Water System ITAAC (8 Sheets)

Commitment Wording		Inspections, Tests, Analyses	Acceptance Criteria
7.7	Class 1E valves listed in Table 2.7.1-2 perform the function listed in Table 2.7.1-1 under system operating conditions.	Tests and analyses or a combination of tests and analyses will be performed to demonstrate the ability of the valves listed in Table 2.7.1-2 to change position as listed in Table 2.7.1-1 under system operating conditions.	The valves change position as listed in Table 2.7.1-1 under system operating conditions.
7.8	The CCWS provides for flow testing of CCWS pumps during plant operation.	A test will be performed.	Normal system alignment allows testing of each CCWS pump during plant operation.
7.9	Containment isolation valves listed in Table 2.7.1-1 close within the containment isolation response time following initiation of a containment isolation signal.	Tests will be performed to demonstrate the ability of the containment isolation valves listed in Table 2.7.1-1 to close within the containment isolation response time following initiation of a containment isolation signal.	Containment isolation valves listed in Table 2.7.1-1 close within 60 seconds following initiation of a containment isolation signal.
7.10	The CCWS surge tanks provide adequate capacity for system operation.	Tests and analysis will be performed to determine the CCWS surge tank capacity.	The CCWS surge tank capacity is equal to or greater than 950 ft^3.
7.11	Each CCWS surge tank maintains a reserve volume of 750 gallons to accommodate potential total train leakage of 4 gallons per hour for 7 days of continuous operation with no makeup source available.	Tests and analysis will be performed to determine the total train leakage for each CCWS train.	A report exists and concludes that the worst case leakage between trains is less than or equal to 4 gph assuming one train is running with its associated A/B switchover valves open and the opposite train depressurized. Testing to support this report should be performed with one train in standby and one train running with its associated A/B switchover valves open. This test should be performed on all four CCWS trains.

Next File

Figure 2.7.1-1—Component Cooling Water System Functional Arrangement
Sheet 1 of 11

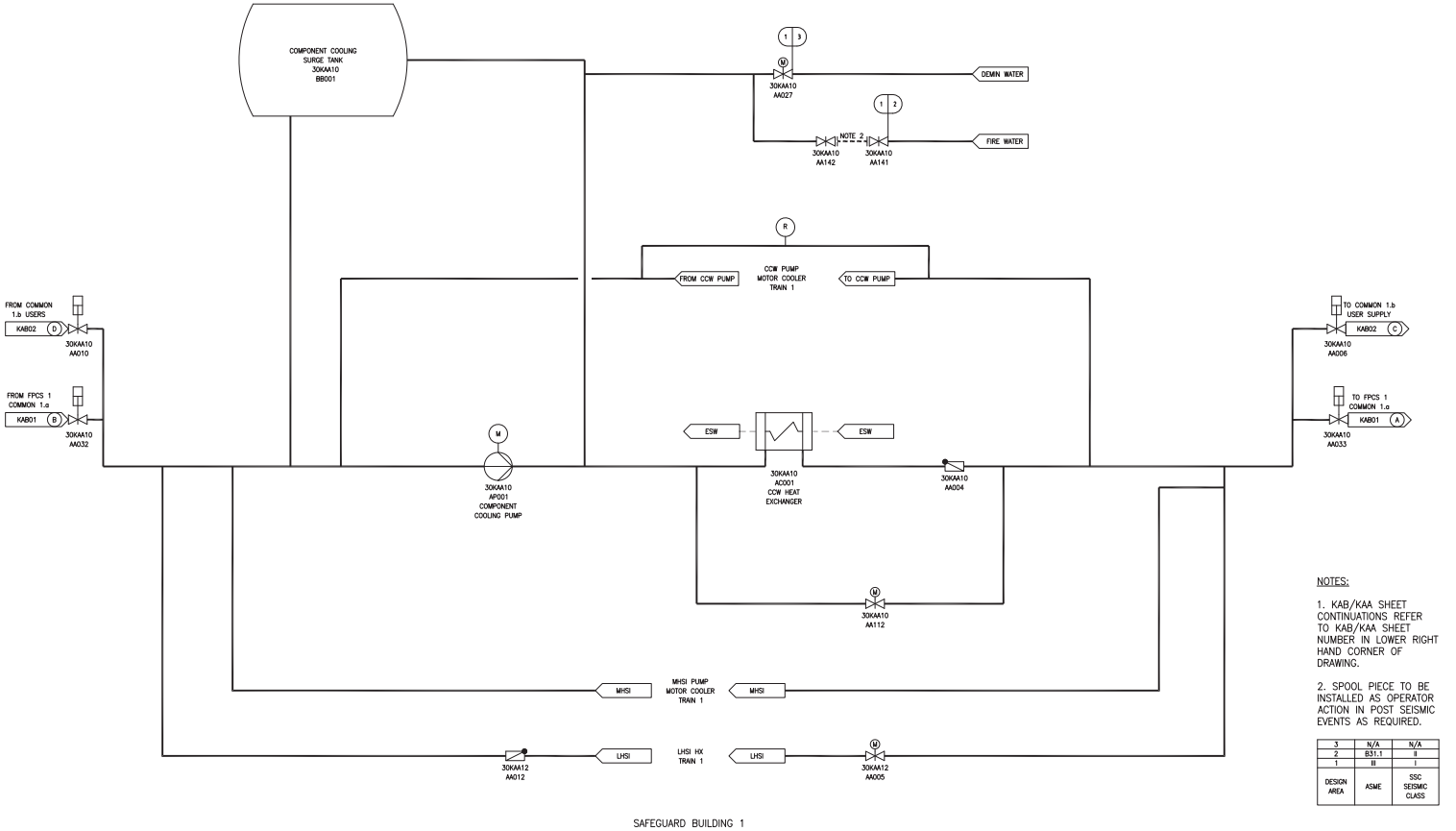

Figure 2.7.1-1—Component Cooling Water System Functional Arrangement
Sheet 2 of 11

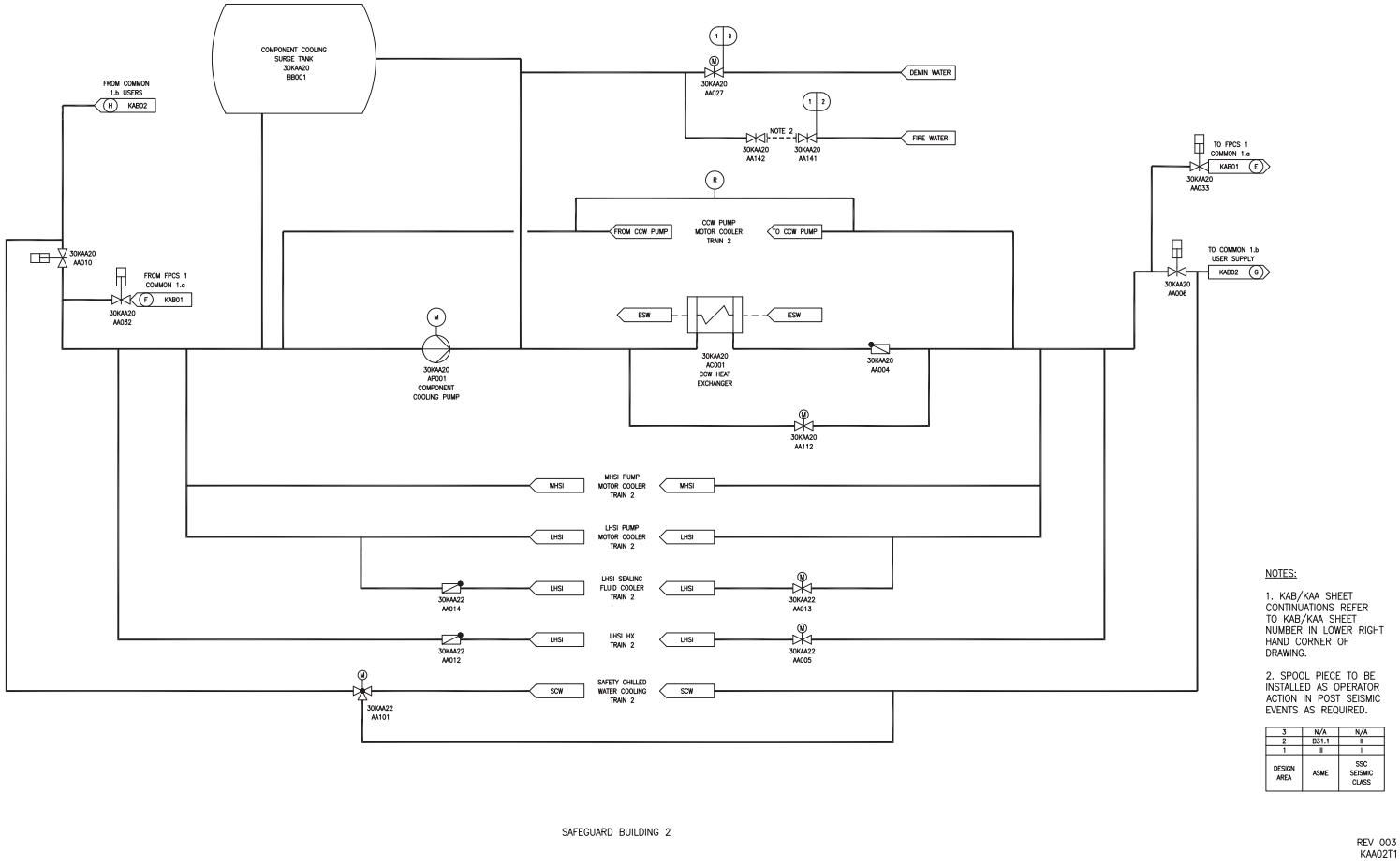

NOTES:

1. KAB/KAA SHEET CONTINUATIONS REFER TO KAB/KAA SHEET NUMBER IN LOWER RIGHT HAND CORNER OF DRAWING.

2. SPOOL PIECE TO BE INSTALLED AS OPERATOR ACTION IN POST SEISMIC EVENTS AS REQUIRED.

3	N/A	N/A
2	B31.1	II
1	III	I
DESIGN AREA	ASME	SSC SEISMIC CLASS

REV 003
KAA02T1

Figure 2.7.1-1—Component Cooling Water System Functional Arrangement
Sheet 3 of 11

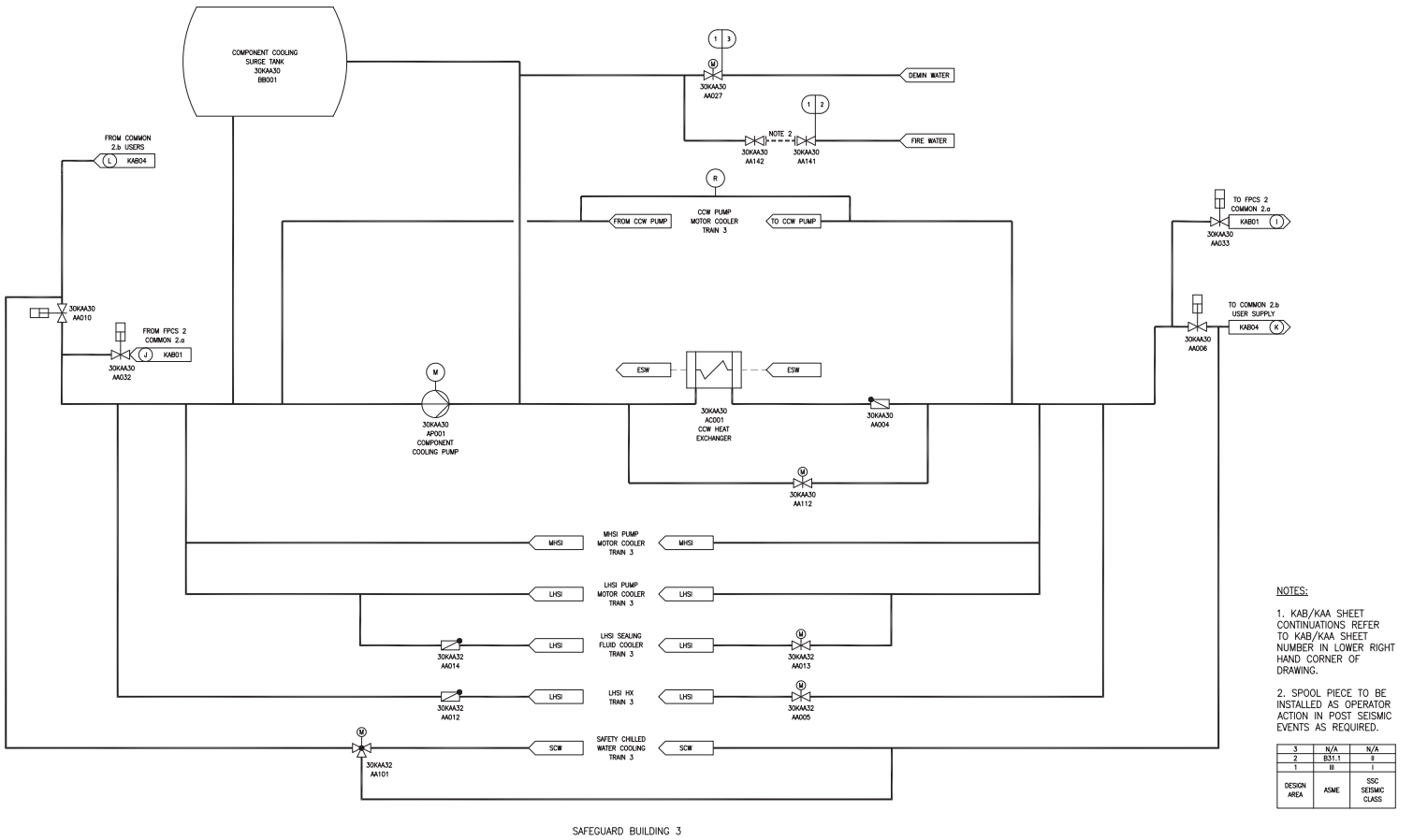

NOTES:

1. KAB/KAA SHEET CONTINUATIONS REFER TO KAB/KAA SHEET NUMBER IN LOWER RIGHT HAND CORNER OF DRAWING.

2. SPOOL PIECE TO BE INSTALLED AS OPERATOR ACTION IN POST SEISMIC EVENTS AS REQUIRED.

3	N/A	N/A
2	B31.1	II
1	III	I
DESIGN AREA	ASME	SSC SEISMIC CLASS

REV 003
KAA03T1

Figure 2.7.1-1—Component Cooling Water System Functional Arrangement
Sheet 4 of 11

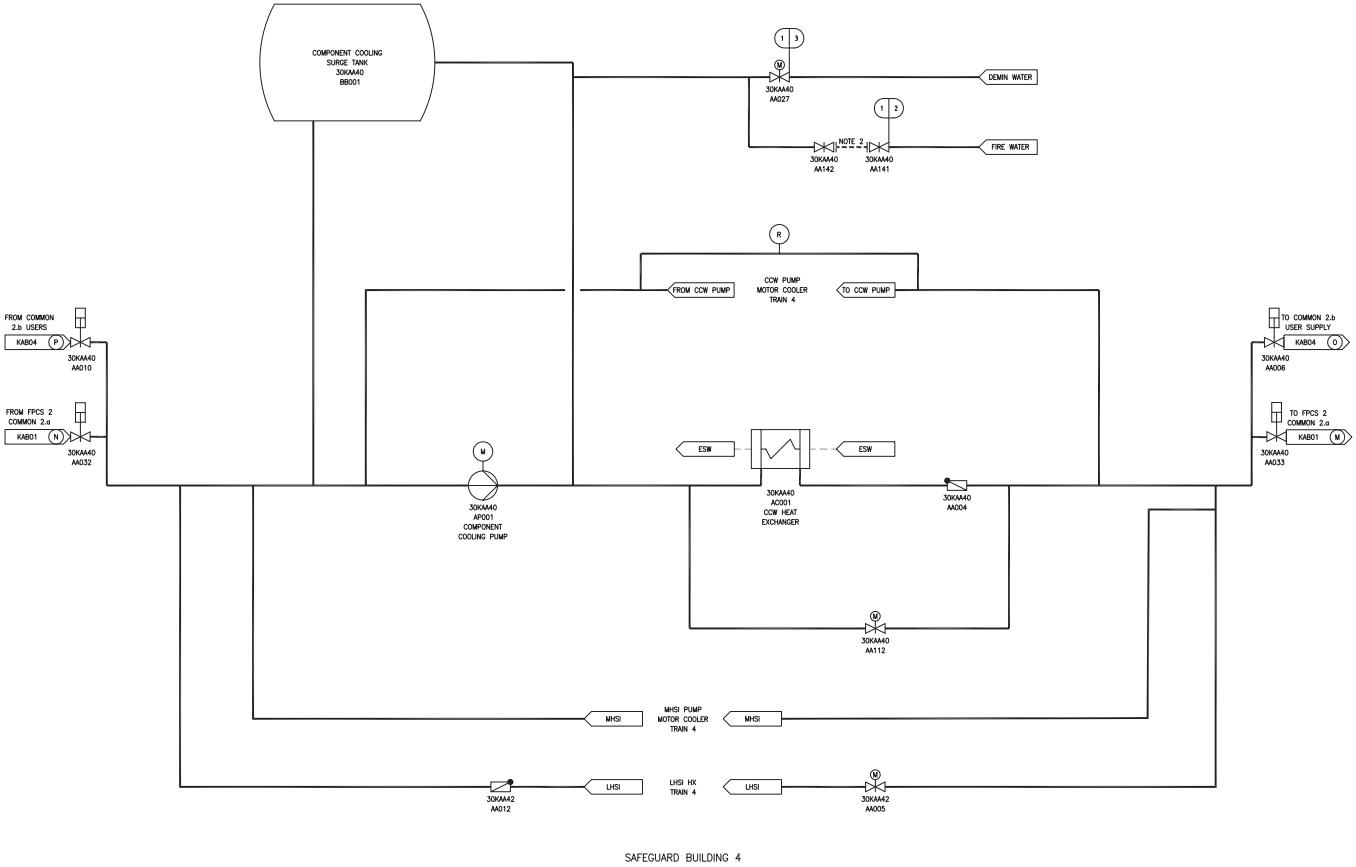

NOTES:

1. KAB/KAA SHEET CONTINUATIONS REFER TO KAB/KAA SHEET NUMBER IN LOWER RIGHT HAND CORNER OF DRAWING.

2. SPOOL PIECE TO BE INSTALLED AS OPERATOR ACTION IN POST SEISMIC EVENTS AS REQUIRED.

3	N/A	N/A
2	B31.1	II
1	III	I
DESIGN AREA	ASME	SSC SEISMIC CLASS

REV 003
KAA04T1

Figure 2.7.1-1—Component Cooling Water System Functional Arrangement
Sheet 5 of 11

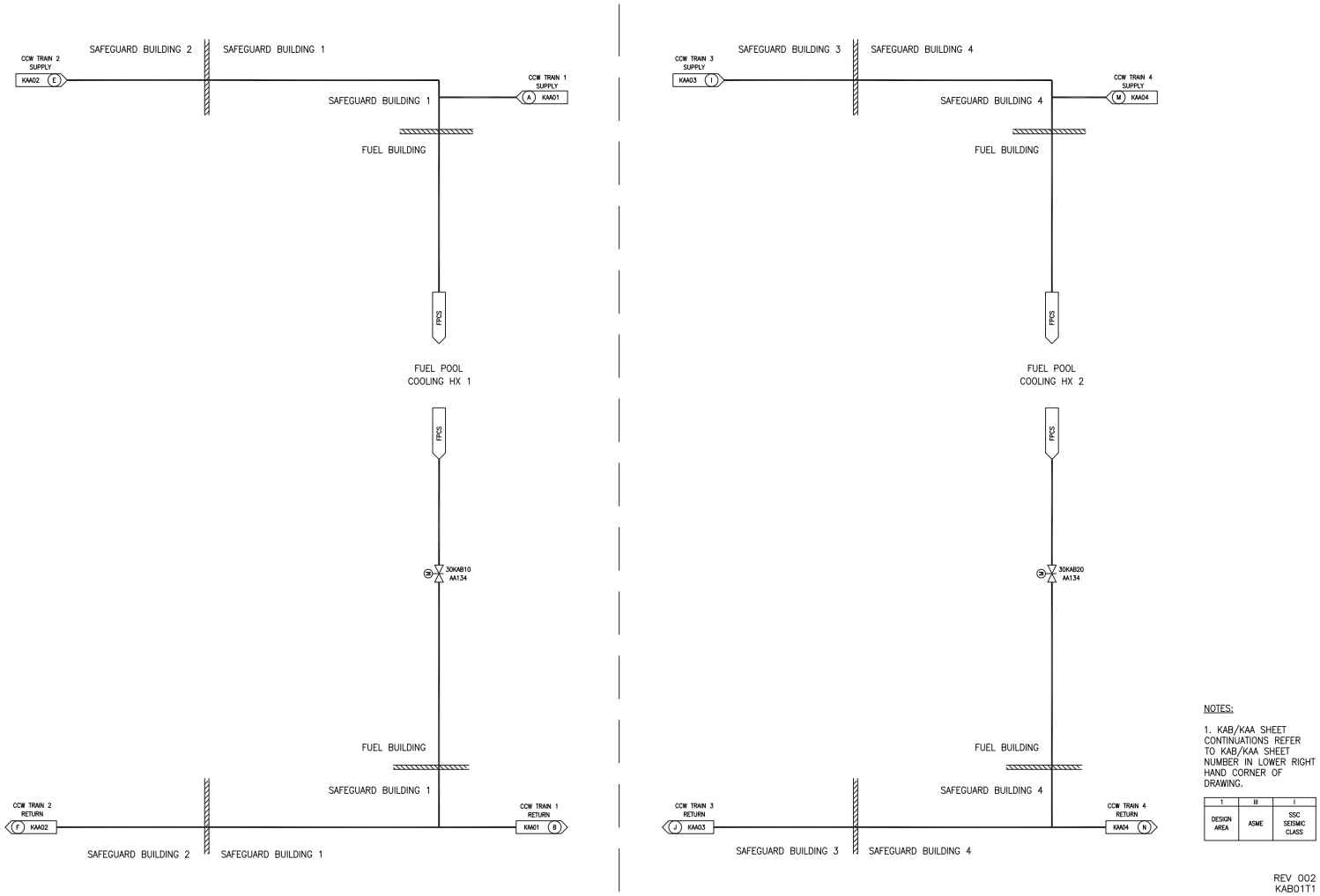

Figure 2.7.1-1—Component Cooling Water System Functional Arrangement
Sheet 6 of 11

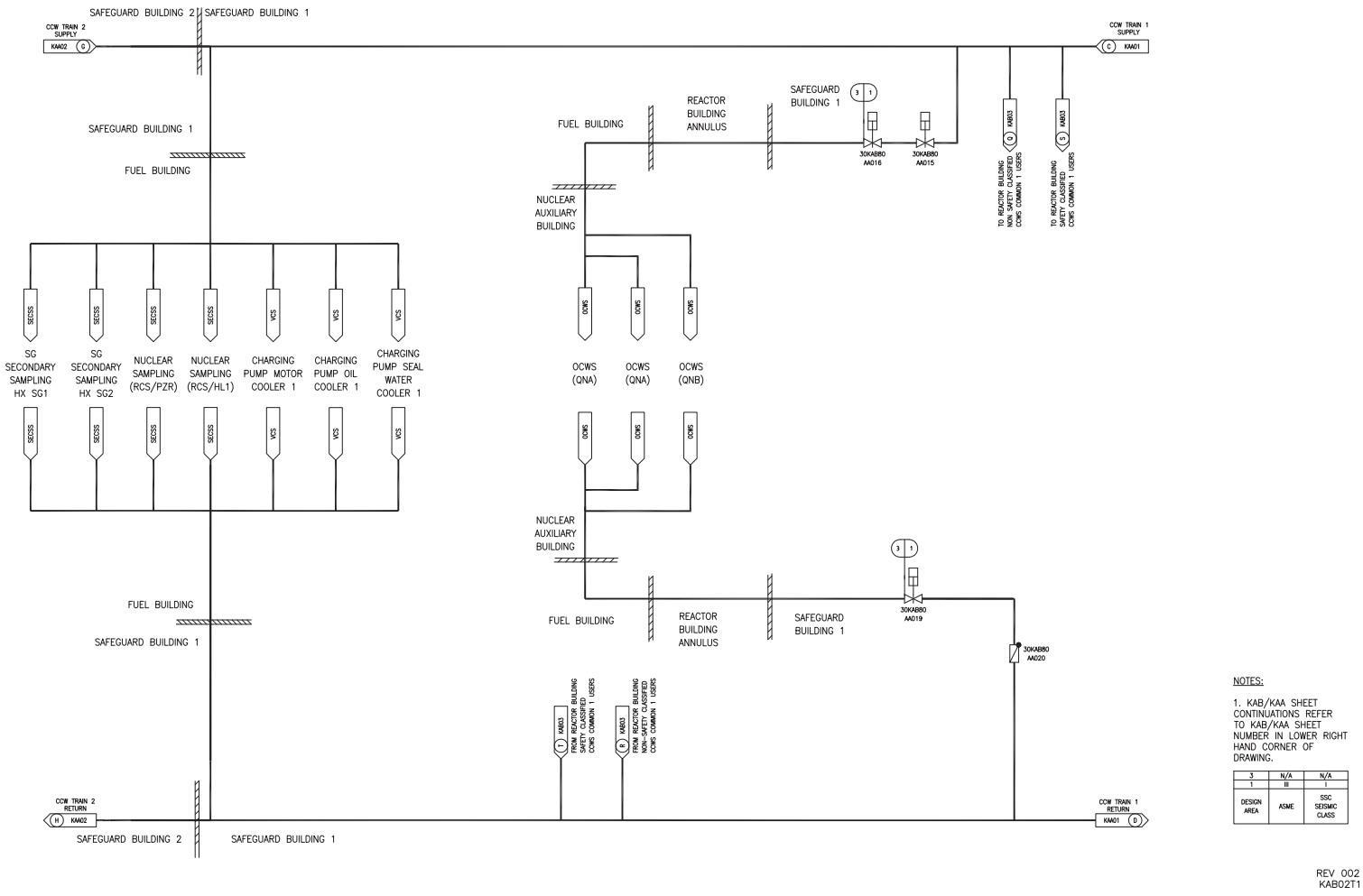

NOTES:

1. KAB/KAA SHEET CONTINUATIONS REFER TO KAB/KAA SHEET NUMBER IN LOWER RIGHT HAND CORNER OF DRAWING.

3	N/A	N/A
1	III	I
DESIGN AREA	ASME	SSC SEISMIC CLASS

REV 002
KAB02T1

Figure 2.7.1-1—Component Cooling Water System Functional Arrangement
Sheet 7 of 11

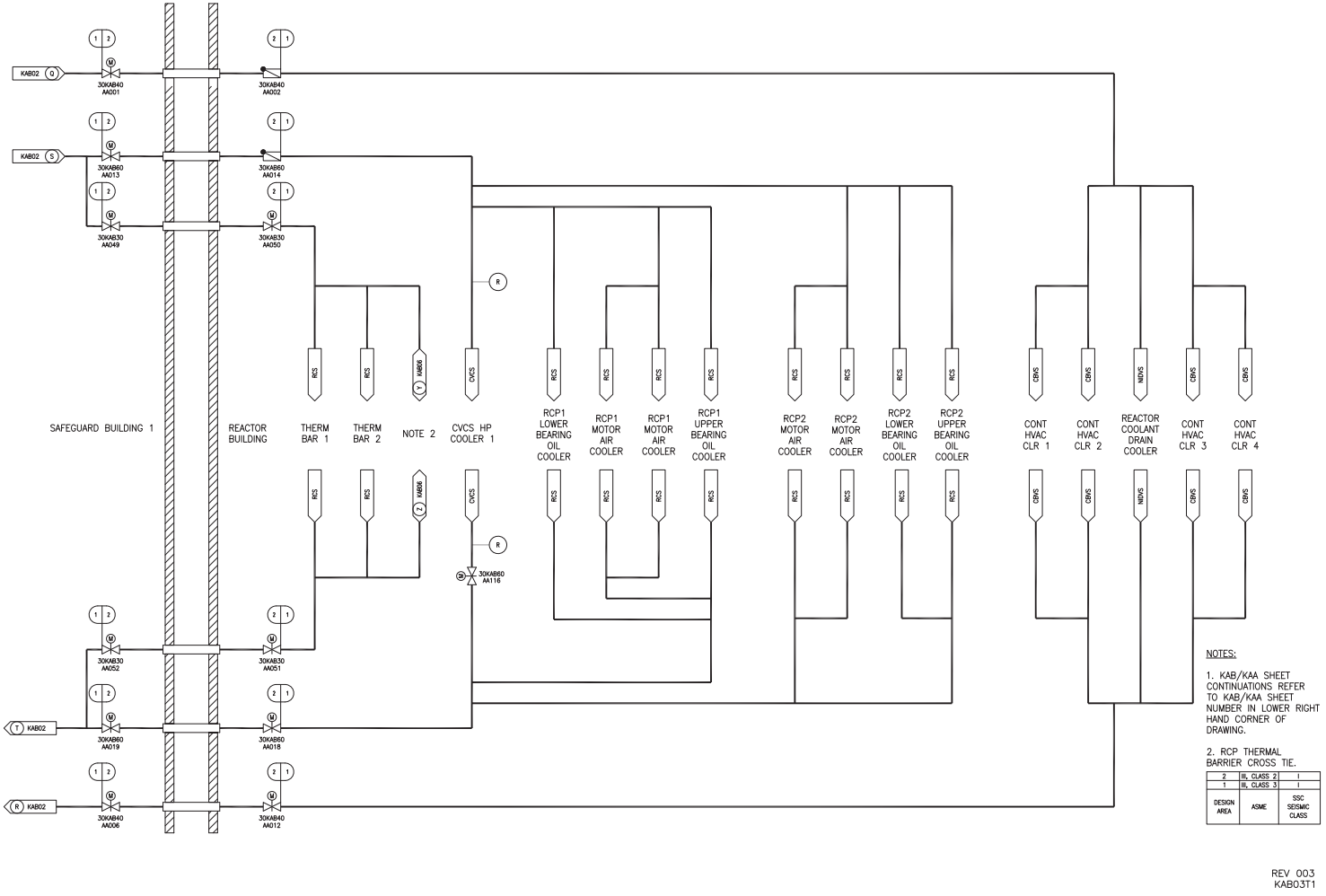

Figure 2.7.1-1—Component Cooling Water System Functional Arrangement
Sheet 8 of 11

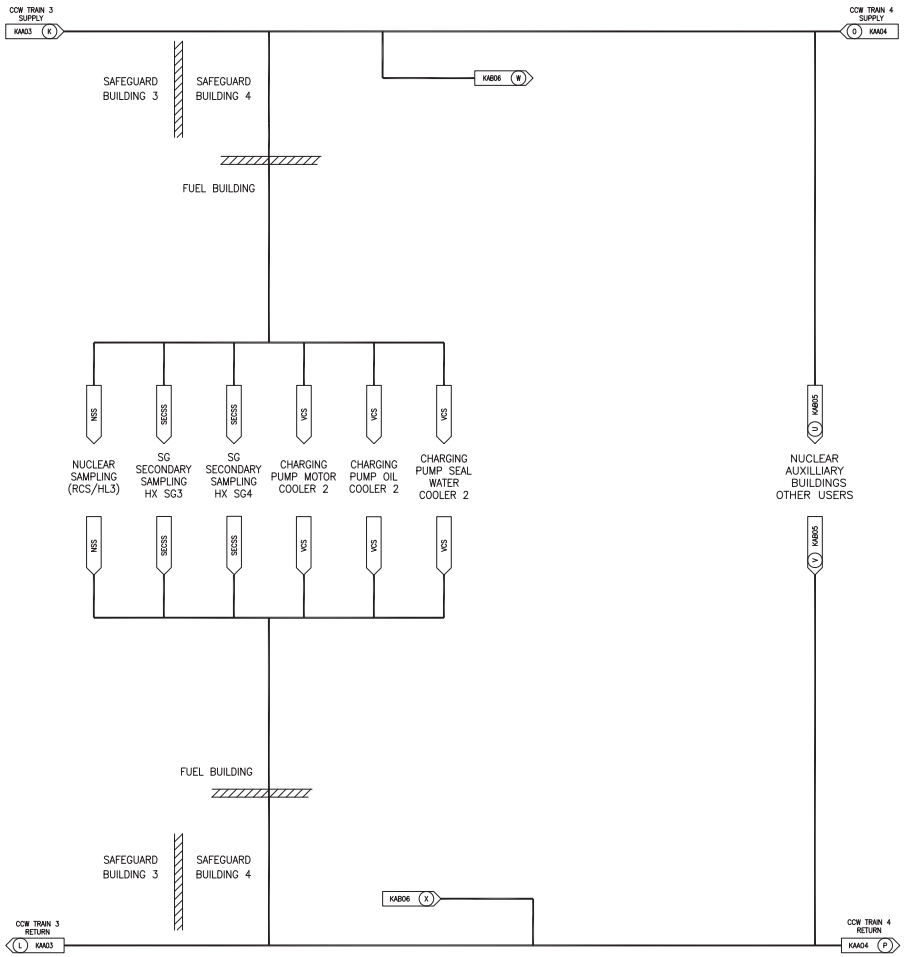

NOTES:

1. KAB/KAA SHEET CONTINUATIONS REFER TO KAB/KAA SHEET NUMBER IN LOWER RIGHT HAND CORNER OF DRAWING.

2. RCP THERMAL BARRIER CROSS TIE.

1	III	I
DESIGN AREA	ASME	SSC SEISMIC CLASS

REV 002
KAB04T1

Figure 2.7.1-1—Component Cooling Water System Functional Arrangement
Sheet 9 of 11

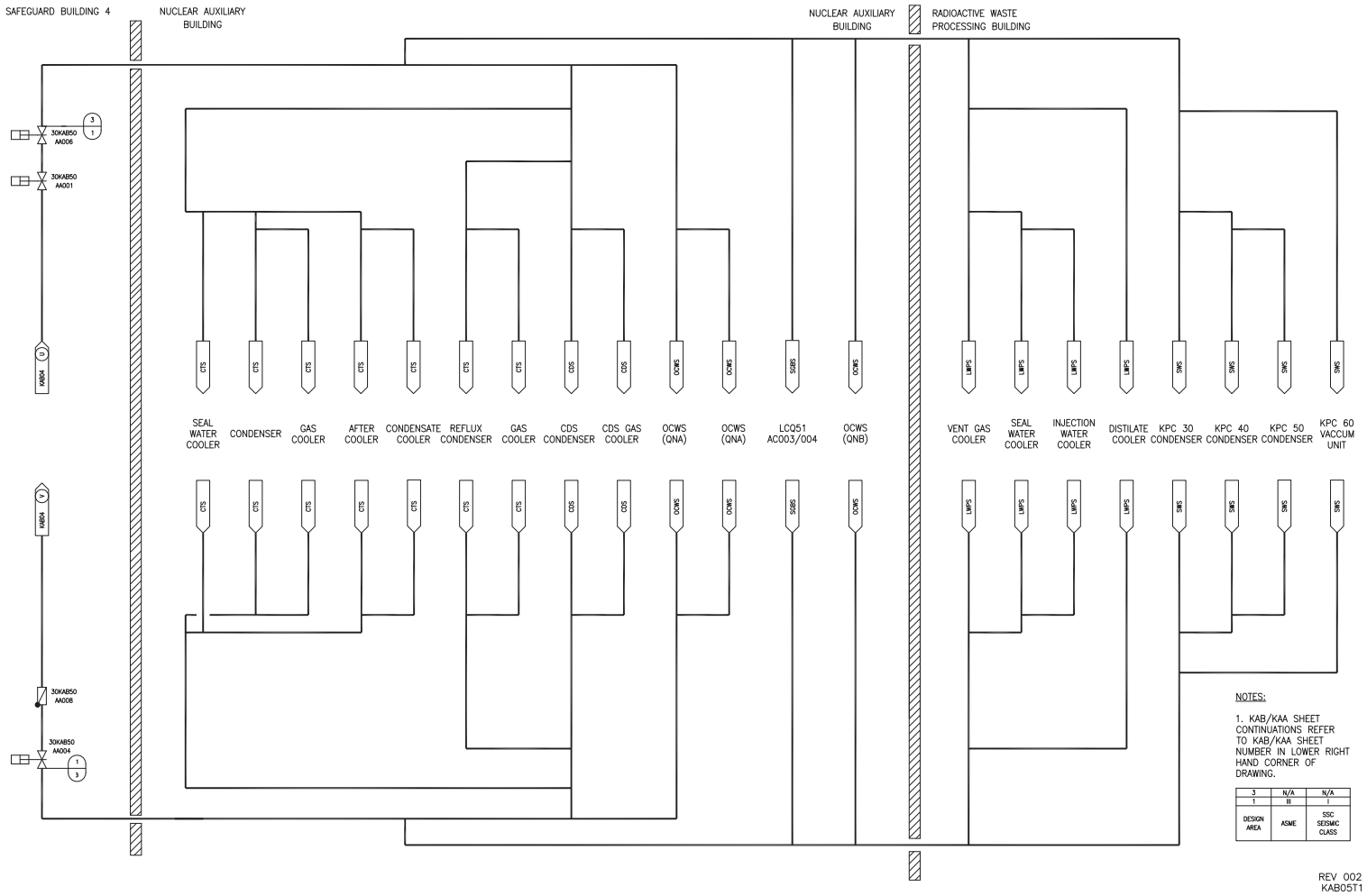

Figure 2.7.1-1—Component Cooling Water System Functional Arrangement
Sheet 10 of 11

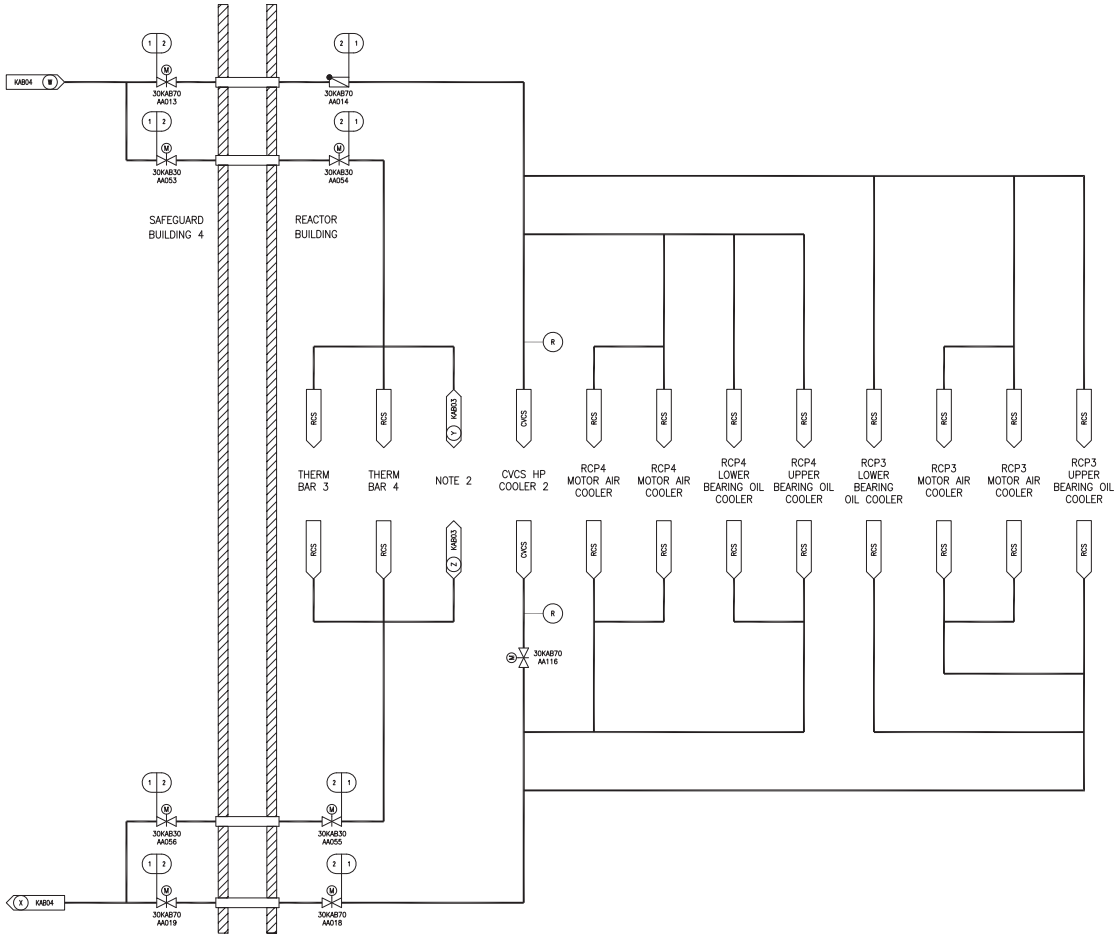

NOTES:

1. KAB/KAA SHEET CONTINUATIONS REFER TO KAB/KAA SHEET NUMBER IN LOWER RIGHT HAND CORNER OF DRAWING.

2. RCP THERMAL BARRIER CROSS TIE.

2	III, CLASS 2	I
1	III, CLASS 3	I
DESIGN AREA	ASME	SSC SEISMIC CLASS

REV 003
KAB06T1

Figure 2.7.1-1—Component Cooling Water System Functional Arrangement
Sheet 11 of 11

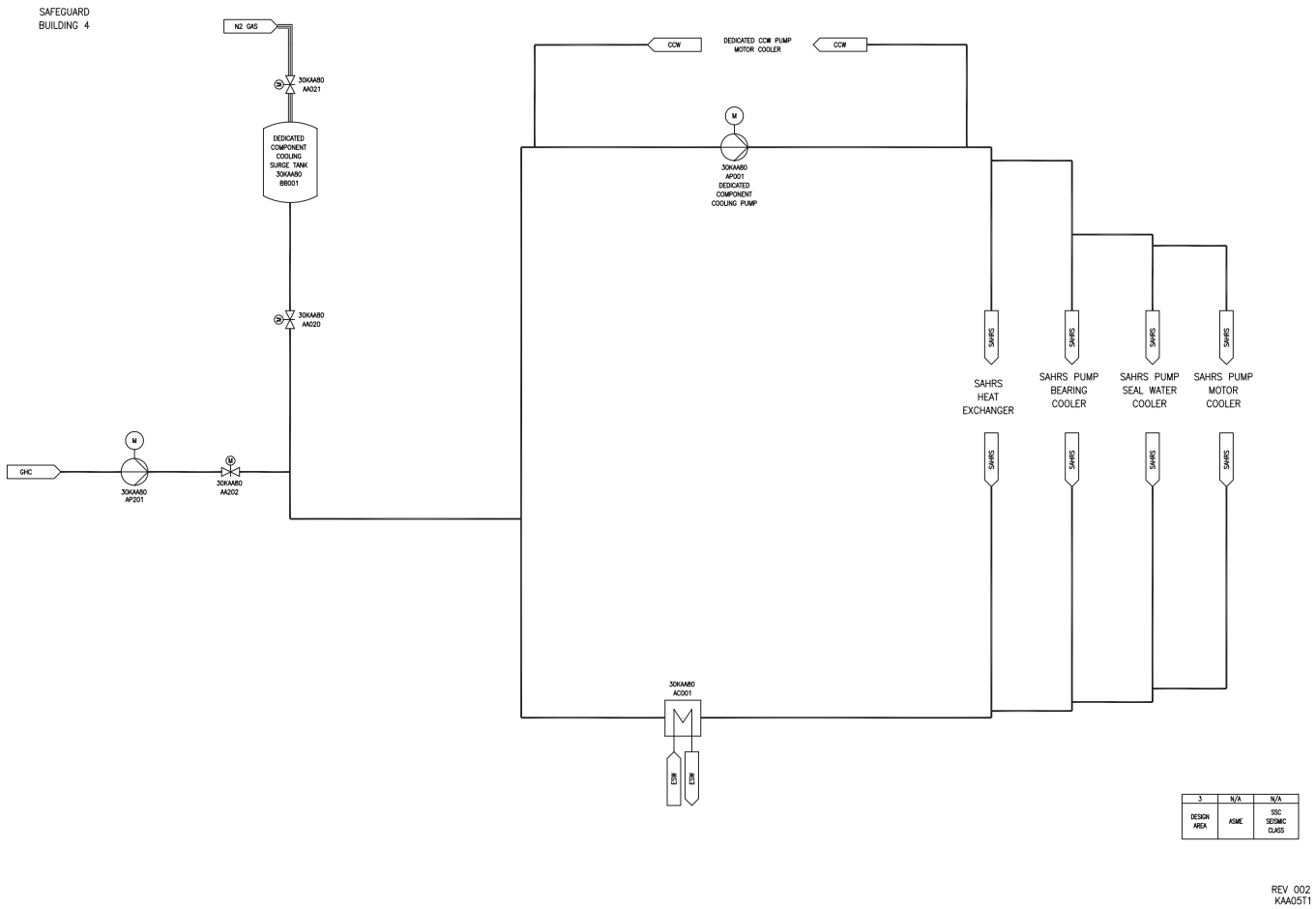

Next File

2.7.2 Safety Chilled Water System

1.0 Description

The safety chilled water system (SCWS) is a safety-related system that delivers refrigerated chilled water to the safety-related heating, ventilation, air conditioning (HVAC) systems and to Division 1 and Division 4 low head safety injection (LHSI) motor cooler and pump sealing cooler.

The SCWS significant safety-related function is to provide chilled water as a heat sink to safety-related HVAC systems, the main control room (MCR) habitability, and cooling of the LHSI pump seal coolers and motor coolers in Division 1 and Division 4 in the event of a design basis accident.

The SCWS significant non-safety-related function is for Division 1 and Division 4 to function in the event of a station blackout (SBO) or loss of ultimate heat sink.

2.0 Arrangement

2.1 The functional arrangement of the SCWS is as shown on Figure 2.7.2-1—Safety Chilled Water System Functional Arrangement.

2.2 The location of the SCWS equipment is as listed in Table 2.7.2-1—Safety Chilled Water System Equipment Mechanical Design.

2.3 Physical separation exists between divisions of the SCWS, excluding cross-connected piping.

3.0 Mechanical Design Features

3.1 Deleted.

3.2 Check valves listed in Table 2.7.2-1 will function as listed in Table 2.7.2-1.

3.3 Deleted.

3.4 Components identified as Seismic Category I in Table 2.7.2-1 can withstand seismic design basis loads without a loss of the function listed in Table 2.7.2-1.

3.5 Deleted.

3.6 Deleted.

3.7 Deleted.

3.8 Deleted.

3.9 SCWS piping shown as ASME Code Section III on Figure 2.7.2-1 is designed in accordance with ASME Code Section III requirements.

3.10 SCWS piping shown as ASME Code Section III on Figure 2.7.2-1 is installed in accordance with an ASME Code Section III Design Report.

3.11 Pressure boundary welds in SCWS piping shown as ASME Code Section III on Figure 2.7.2-1 are in accordance with ASME Code Section III.

3.12 SCWS piping shown as ASME Code Section III on Figure 2.7.2-1 retains pressure boundary integrity at design pressure.

3.13 Deleted.~~SCWS piping shown as ASME Code Section III on Figure 2.7.2-1 is installed and inspected in accordance with ASME Code Section III requirements.~~

3.14 Components listed in Table 2.7.2-1 as ASME Code Section III are designed in accordance with ASME Code Section III requirements.

3.15 Components listed in Table 2.7.2-1 as ASME Code Section III are fabricated in accordance with ASME Code Section III requirements.

3.16 Pressure boundary welds on components listed in Table 2.7.2-1 as ASME Code Section III are in accordance with ASME Code Section III requirements.

3.17 Components listed in Table 2.7.2-1 as ASME Code Section III retain pressure boundary integrity at design pressure.

3.18 Components listed in Table 2.7.2-1 as ASME Code Section III are installed in accordance with ASME Code Section III requirements.

4.0 I&C Design Features, Displays and Controls

4.1 Displays listed in Table 2.7.2-2—Safety Chilled Water System Equipment I&C and Electrical Design are retrievable in the MCR and the remote shutdown station (RSS) as listed in Table 2.7.2-2.

4.2 The SCWS equipment controls are provided in the MCR and the RSS as listed in Table 2.7.2-2.

4.3 Deleted

4.4 The SCWS has the following interlocks with Division 1 and 2 or Division 3 and 4 cross-tied: The non running division chiller and pump(s) automatically start if the running division chiller or pumps(s) trip.

5.0 Electrical Power Design Features

5.1 The components designated as Class 1E in Table 2.7.2-2 are powered from Class 1E division as listed in Table 2.7.2-2 in a normal or alternate feed condition.

5.2 Valves listed in Table 2.7.2-2 fail as-is on loss of power.

6.0 Environmental Qualifications

6.1 Components in Table 2.7.2-2, that are designated as harsh environment, will perform the function listed in Table 2.7.2-1 in the environments that exist during and following design basis events.

7.0 Equipment and System Performance

7.1 The SCWS chiller refrigerating units shown on Figure 2.7.2-1 have the capacity to provide chilled water at the temperature to support the heat removal requirements of each user.

7.2 The pumps listed in Table 2.7.2-1 have net positive suction head available (NPSHA) that is greater than net positive suction head required (NPSHR) at system run-out flow.

7.3 The SCWS delivers water to the equipment listed in Table 2.7.2-1.

7.4 Class 1E valves listed in Table 2.7.2-2 can perform the function listed in Table 2.7.2-1 under system operating conditions.

7.5 The SCWS provides for flow testing of the chilled water circulation pumps during plant operation.

7.6 The SCWS expansion tank maintains a reserve volume to accommodate system leakage for seven days

8.0 System Inspections, Tests, Analysis, and Acceptance Criteria

Table 2.7.2-3 lists the SCWS ITAAC.

Table 2.7.2-1—Safety Chilled Water System Equipment Mechanical Design (3 Sheets)

Description	Tag Number (1)	Location	ASME Code Section III	Function	Seismic Category
Safety Chilled Water Division 1					
Air Cooled Condenser	30QKA10AC002	Safeguard Building 1	Yes	Run	I
Evaporator	30QKA10AC001	Safeguard Building 1	Yes	Run	I
Chilled Water Circulation Pump	30QKA10AP107	Safeguard Building 1	Yes	Run	I
Chilled Water Circulation Pump	30QKA10AP108	Safeguard Building 1	Yes	Run	I
Expansion Tank	30QKA10BB101	Safeguard Building 1	Yes	Maintain system static pressure	I
Flow Control Valve	30QKA10AA101	Safeguard Building 1	Yes	Open-Close	I
Flow Control Valve	30QKB10AA101	Safeguard Building 1	Yes	Open-Close	I
Flow Control Valve	30QKC10AA101	Safeguard Building 1	Yes	Open-Close	I
Check Valve	30QKA10AA003	Safeguard Building 1	Yes	Open-Close	I
Check Valve	30QKA10AA018	Safeguard Building 1	Yes	Open-Close	I
Check Valve	30QKC10AA028	Safeguard Building 1	Yes	Open-Close	I
Cross-Tie Valve	30QKA10AA102	Safeguard Building 1	Yes	Open-Close	I
Cross-Tie Valve	30QKA10AA103	Safeguard Building 1	Yes	Open-Close	I
Flow Control Valve	30QKC10AA025	Safeguard Building 1	Yes	Open-Close	I
Safety Chilled Water Division 2					
Water Cooled Condenser	30QKA20AC002	Safeguard Building 2	Yes	Run	I
Evaporator	30QKA20AC001	Safeguard Building 2	Yes	Run	I
Chilled Water Circulation Pump	30QKA20AP107	Safeguard Building 2	Yes	Run	I

Table 2.7.2-1—Safety Chilled Water System Equipment Mechanical Design (3 Sheets)

Description	Tag Number (1)	Location	ASME Code Section III	Function	Seismic Category
Chilled Water Circulation Pump	30QKA20AP108	Safeguard Building 2	Yes	Run	I
Expansion Tank	30QKA20BB101	Safeguard Building 2	Yes	Maintain system static pressure	I
Flow Control Valve	30QKA20AA101	Safeguard Building 2	Yes	Open-Close	I
Flow Control Valve	30QKB20AA101	Safeguard Building 2	Yes	Open-Close	I
Flow Control Valve	30QKC20AA101	Safeguard Building 2	Yes	Open-Close	I
Check Valve	30QKA20AA003	Safeguard Building 2	Yes	Open-Close	I
Check Valve	30QKA20AA018	Safeguard Building 2	Yes	Open-Close	I
Cross-Tie Valve	30QKA20AA102	Safeguard Building 2	Yes	Open-Close	I
Cross-Tie Valve	30QKA20AA103	Safeguard Building 2	Yes	Open-Close	I
Safety Chilled Water Division 3					
Water Cooled Condenser	30QKA30AC002	Safeguard Building 3	Yes	Run	I
Evaporator	30QKA30AC001	Safeguard Building 3	Yes	Run	I
Chilled Water Circulation Pump	30QKA30AP107	Safeguard Building 3	Yes	Run	I
Chilled Water Circulation Pump	30QKA30AP108	Safeguard Building 3	Yes	Run	I
Expansion Tank	30QKA30BB101	Safeguard Building 3	Yes	Maintain system static pressure	I
Flow Control Valve	30QKA30AA101	Safeguard Building 3	Yes	Open-Close	I
Flow Control Valve	30QKB30AA101	Safeguard Building 3	Yes	Open-Close	I
Flow Control Valve	30QKC30AA101	Safeguard Building 3	Yes	Open-Close	I
Check Valve	30QKA30AA003	Safeguard Building 3	Yes	Open-Close	I

Table 2.7.2-1—Safety Chilled Water System Equipment Mechanical Design (3 Sheets)

Description	Tag Number (1)	Location	ASME Code Section III	Function	Seismic Category
Check Valve	30QKA30AA018	Safeguard Building 3	Yes	Open-Close	I
Cross-Tie Valve	30QKA30AA102	Safeguard Building 3	Yes	Open-Close	I
Cross-Tie Valve	30QKA30AA103	Safeguard Building 3	Yes	Open-Close	I
Safety Chilled Water Division 4					
Air Cooled Condenser	30QKA40AC002	Safeguard Building 4	Yes	Run	I
Evaporator	30QKA40AC001	Safeguard Building 4	Yes	Run	I
Chilled Water Circulation Pump	30QKA40AP107	Safeguard Building 4	Yes	Run	I
Chilled Water Circulation Pump	30QKA40AP108	Safeguard Building 4	Yes	Run	I
Expansion Tank	30QKA40BB101	Safeguard Building 4	Yes	Maintain system static pressure	I
Flow Control Valve	30QKA40AA101	Safeguard Building 4	Yes	Open-Close	I
Flow Control Valve	30QKB40AA101	Safeguard Building 4	Yes	Open-Close	I
Flow Control Valve	30QKC40AA101	Safeguard Building 4	Yes	Open-Close	I
Check Valve	30QKA40AA003	Safeguard Building 4	Yes	Open-Close	I
Check Valve	30QKA40AA018	Safeguard Building 4	Yes	Open-Close	I
Check Valve	30QKC40AA028	Safeguard Building 4	Yes	Open-Close	I
Cross-Tie Valve	30QKA40AA102	Safeguard Building 4	Yes	Open-Close	I
Cross-Tie Valve	30QKA40AA103	Safeguard Building 4	Yes	Open-Close	I
Flow Control Valve	30QKC40AA025	Safeguard Building 4	Yes	Open-Close	I

1) Equipment tag numbers are provided for information only and are not part of the certified design.

Table 2.7.2–2—Safety Chilled Water System Equipment I&C and Electrical Design (4 Sheets)

Description	Tag Number (1)	Location	IEEE Class 1E (2)	EQ – Harsh Env.	PACS	MRC / RSS Displays	MCR / RSS Controls
Safety Chilled Water Division 1							
Chiller Refrigerating Unit with Air Cooled Condenser	30QKA10AH112	Safeguard Building 1	Division 1^N	Yes	Yes	On-off / On-off	Start-Stop / Start-Stop
Chilled Water Circulation Pump	30QKA10AP107	Safeguard Building 1	Division 1^N	Yes	Yes	On-off / On-off	Start-Stop / Start-Stop
Chilled Water Circulation Pump	30QKA10AP108	Safeguard Building 1	Division 1^N	Yes	Yes	On-off / On-off	Start-Stop / Start-Stop
Cross-Tie Valve	30QKA10AA102	Safeguard Building 1	Division 1^N Division 2^A	Yes	Yes	Pos / Pos	Open-Close / Open-Close
Cross-Tie Valve	30QKA10AA103	Safeguard Building 1	Division 1^N Division 2^A	Yes	Yes	Pos / Pos	Open-Close / Open-Close
Flow Control Valve	30QKA10AA101	Safeguard Building 1	Division 1^N Division 2^A	Yes	Yes	Pos / Pos	Throttling / Throttling
Flow Control Valve	30QKB10AA101	Safeguard Building 1	Division 1^N Division 2^A	Yes	Yes	Pos / Pos	Throttling / Throttling
Flow Control Valve	30QKC10AA101	Safeguard Building 1	Division 1^N Division 2^A	Yes	Yes	Pos / Pos	Throttling / Throttling
Flow Control Valve	30QKC10AA025	Safeguard Building 1	Division 1^N Division 2^A	Yes	Yes	Pos / Pos	Throttling / Throttling
Safety Chilled Water Division 2							
Chiller Refrigerating Unit with Water Cooled Condenser	30QKA20AH112	Safeguard Building 2	Division 2^N	Yes	Yes	On-off / On-off	Start-Stop / Start-Stop

Table 2.7.2–2—Safety Chilled Water System Equipment I&C and Electrical Design (4 Sheets)

Description	Tag Number (1)	Location	IEEE Class 1E (2)	EQ – Harsh Env.	PACS	MRC / RSS Displays	MCR / RSS Controls
Chilled Water Circulation Pump	30QKA20AP107	Safeguard Building 2	Division 2^N	Yes	Yes	On-off / On-off	Start-Stop / Start-Stop
Chilled Water Circulation Pump	30QKA20AP108	Safeguard Building 2	Division 2^N	Yes	Yes	On-off / On-off	Start-Stop / Start-Stop
Cross-Tie Valve	30QKA20AA102	Safeguard Building 2	Division 2^N Division 1^A	Yes	Yes	Pos / Pos	Open-Close / Open-Close
Cross-Tie Valve	30QKA20AA103	Safeguard Building 2	Division 2^N Division 1^A	Yes	Yes	Pos / Pos	Open-Close / Open-Close
Flow Control Valve	30QKA20AA101	Safeguard Building 2	Division 2^N Division 1^A	Yes	Yes	Pos / Pos	Throttling / Throttling
Flow Control Valve	30QKB20AA101	Safeguard Building 2	Division 2^N Division 1^A	Yes	Yes	Pos / Pos	Throttling / Throttling
Flow Control Valve	30QKC20AA101	Safeguard Building 2	Division 2^N Division 1^A	Yes	Yes	Pos / Pos	Throttling / Throttling
Safety Chilled Water Division 3							
Chiller Refrigerating Unit with Water Cooled Condenser	30QKA30AH112	Safeguard Building 3	Division 3^N	Yes	Yes	On-off / On-off	Start-Stop / Start-Stop
Chilled Water Circulation Pump	30QKA30AP107	Safeguard Building 3	Division 3^N	Yes	Yes	On-off / On-off	Start-Stop / Start-Stop
Chilled Water Circulation Pump	30QKA30AP108	Safeguard Building 3	Division 3^N	Yes	Yes	On-off / On-off	Start-Stop / Start-Stop
Cross-Tie Valve	30QKA30AA102	Safeguard Building 3	Division 3^N Division 4^A	Yes	Yes	Pos / Pos	Open-Close / Open-Close

Table 2.7.2–2—Safety Chilled Water System Equipment I&C and Electrical Design (4 Sheets)

Description	Tag Number (1)	Location	IEEE Class 1E (2)	EQ – Harsh Env.	PACS	MRC / RSS Displays	MCR / RSS Controls
Cross-Tie Valve	30QKA30AA103	Safeguard Building 3	Division 3^N Division 4^A	Yes	Yes	Pos / Pos	Open-Close / Open-Close
Flow Control Valve	30QKA30AA101	Safeguard Building 3	Division 3^N Division 4^A	Yes	Yes	Pos / Pos	Throttling / Throttling
Flow Control Valve	30QKB30AA101	Safeguard Building 3	Division 3^N Division 4^A	Yes	Yes	Pos / Pos	Throttling / Throttling
Flow Control Valve	30QKC30AA101	Safeguard Building 3	Division 3^N Division 4^A	Yes	Yes	Pos / Pos	Throttling / Throttling
Safety Chilled Water Division 4							
Chiller Refrigerating Unit with Air Cooled Condenser	30QKA40AH112	Safeguard Building 4	Division 4^N	Yes	Yes	On-off / On-off	Start-Stop / Start-Stop
Chilled Water Circulation Pump	30QKA40AP107	Safeguard Building 4	Division 4^N	Yes	Yes	On-off / On-off	Start-Stop / Start-Stop
Chilled Water Circulation Pump	30QKA40AP108	Safeguard Building 4	Division 4^N	Yes	Yes	On-off / On-off	Start-Stop / Start-Stop
Cross-Tie Valve	30QKA40AA102	Safeguard Building 4	Division 4^N Division 3^A	Yes	Yes	Pos / Pos	Open-Close / Open-Close
Cross-Tie Valve	30QKA40AA103	Safeguard Building 4	Division 4^N Division 3^A	Yes	Yes	Pos / Pos	Open-Close / Open-Close
Flow Control Valve	30QKA40AA101	Safeguard Building 4	Division 4^N Division 3^A	Yes	Yes	Pos / Pos	Throttling / Throttling
Flow Control Valve	30QKB40AA101	Safeguard Building 4	Division 4^N Division 3^A	Yes	Yes	Pos / Pos	Throttling / Throttling

Table 2.7.2–2—Safety Chilled Water System Equipment I&C and Electrical Design (4 Sheets)

Description	Tag Number (1)	Location	IEEE Class 1E (2)	EQ – Harsh Env.	PACS	MRC / RSS Displays	MCR / RSS Controls
Flow Control Valve	30QKC40AA101	Safeguard Building 4	Division 4[N] Division 3[A]	Yes	Yes	Pos / Pos	Throttling / Throttling
Flow Control Valve	30QKC40AA025	Safeguard Building 4	Division 4[N] Division 3[A]	Yes	Yes	Pos / Pos	Throttling / Throttling

1) Equipment tag numbers are provided for information only and are not part of the certified design.

2) [N] denotes the division the component is normally powered from; [A] denotes the division the component is powered from when alternate feed is implemented.

Table 2.7.2-3—Safety Chilled Water System ITAAC (6 Sheets)

Commitment Wording		Inspections, Tests, Analyses	Acceptance Criteria
2.1	The functional arrangement of the SCWS is as shown on Figure 2.7.2-1.	Inspections of the as-built system is as shown on Figure 2.7.2-1 will be conducted.	The as-built SCWS conforms to the functional arrangement as shown on Figure 2.7.2-1.
2.2	The location of the SCWS equipment is as listed in Table 2.7.2-1.	An inspection will be performed of the location of the equipment listed in Table 2.7.2-1.	The equipment listed in Table 2.7.2-1 is located as listed in Table 2.7.2-1.
2.3	Physical separation exists between divisions of the SCWS.	Inspection will be performed to verify that the divisions of the SCWS are located in separate Safeguard Buildings.	The divisions of the SCWS are located in separate Safeguard Buildings as shown on Figure 2.7.2-1.
3.1	Deleted.	Deleted.	Deleted.
3.2	Check valves listed in Table 2.7.2-1 will function as listed in Table 2.7.2-1.	Tests will be performed for the operation of the check valves listed in Table 2.7.2-1.	The check valves listed in Table 2.7.2-1 perform the functions listed in Table 2.7.2-1.
3.3	Deleted.	Deleted.	Deleted.
3.4	Components identified as Seismic Category I in Table 2.7.2-1 can withstand seismic design basis loads without a loss of the function listed in Table 2.7.2-1.	a. Type tests, analyses, or a combination of type tests and analyses will be performed on the components identified as Seismic Category I in Table 2.7.2-1 using analytical assumptions, or under conditions, which bound the Seismic Category I design requirements. b. Inspections will be performed of the Seismic Category I components identified in Table 2.7.2-1 to verify that the components, including anchorage, are installed as specified on the construction drawings and deviations have been reconciled to the seismic qualification reports (SQDP, EQDP, or analyses).	a. Seismic qualification reports (SQDP, EQDP, or analyses) exist and conclude that the Seismic Category I components identified in Table 2.7.2-1 can withstand seismic design basis loads without a loss of the function listed in Table 2.7.2-1 including the time required to perform the listed function. b. Inspection reports exist and conclude that the Seismic Category I components identified in Table 2.7.2-1, including anchorage, are installed as specified on the construction drawings and deviations have been reconciled to the seismic qualification reports (SQDP, EQDP, or analyses).

Table 2.7.2-3—Safety Chilled Water System ITAAC (6 Sheets)

Commitment Wording		Inspections, Tests, Analyses	Acceptance Criteria
3.5	Deleted.	Deleted.	Deleted.
3.6	Deleted.	Deleted.	Deleted.
3.7	Deleted.	Deleted.	Deleted.
3.8	Deleted.	Deleted.	Deleted.
3.9	SCWS piping shown as ASME Code Section III on Figure 2.7.2-1 is designed in accordance with ASME Code Section III requirements.	Inspections of the ASME Code Section III Design Reports (NCA-3550) and associated reference documents will be performed. **{{DAC}}**	ASME Code Section III Design Reports (NCA-3550) exist and conclude that SCWS piping shown as ASME Code Section III on Figure 2.7.2-1 complies with ASME Code Section III requirements. **{{DAC}}**
3.10	SCWS piping shown as ASME Code Section III on Figure 2.7.2-1 is installed in accordance with an ASME Code Section III Design Report.	Analyses to reconcile as-built deviations to the ASME Code Design Reports (NCA-3550) will be performed. ~~Piping analyzed using time-history methods will be reconciled to the as-built information.~~	For SCWS piping shown as ASME Code Section III on Figure 2.7.2-1, ASME Code Data Reports (N-5) exist and conclude that design reconciliation (NCA-3554) has been completed in accordance with the ASME Code Section III for the as-built system. The report(s) document the as-built condition.
3.11	Pressure boundary welds in SCWS piping shown as ASME Code Section III on Figure 2.7.2-1 are in accordance with ASME Code Section III.	Inspections of pressure boundary welds verify that welding is performed in accordance with ASME Code Section III requirements.	ASME Code Section III Data Reports exist and conclude that pressure boundary welding for SCWS piping shown as ASME Code Section III on Figure 2.7.2-1 has been performed in accordance with ASME Code Section III.
3.12	SCWS piping shown as ASME Code Section III on Figure 2.7.2-1 retain pressure boundary integrity at design pressure.	Hydrostatic tests will be performed on the as-built system.	For SCWS piping shown as ASME Code Section III on Figure 2.7.2-1, ASME Code Section III Data Reports exist and conclude that hydrostatic test results comply with ASME Code Section III requirements.

Table 2.7.2-3—Safety Chilled Water System ITAAC (6 Sheets)

Commitment Wording		Inspections, Tests, Analyses	Acceptance Criteria
3.13	Deleted.~~SCWS piping shown as ASME Code Section III on Figure 2.7.2-1 is installed and inspected in accordance with ASME Code Section III requirements.~~	Deleted.~~An inspection of the as-built piping will be performed.~~	Deleted.~~For SCWS piping shown as ASME Code Section III on Figure 2.7.2-1, N-5 Data Reports exist and conclude that installation and inspection are in accordance with ASME Code Section III requirements.~~
3.14	Components listed in Table 2.7.2-1 as ASME Code Section III are designed in accordance with ASME Code Section III requirements.	Inspections of ASME Code Section III Design Reports and associated reference documents will be performed.~~Inspections will be performed for the existence of ASME Code Section III Design Reports.~~	ASME Code Section III Design Reports (NCA-3550) exist and conclude that components listed as ASME Code Section III in Table 2.7.2-1 comply with ASME Code Section III requirements.~~ASME Code Section III Design Reports (NCA-3550) exist for components listed as ASME Code Section III in Table 2.7.2-1.~~
3.15	Components listed in Table 2.7.2-1 as ASME Code Section III are fabricated in accordance with ASME Code Section III requirements.	An analysis will be performed to verify that deviations to the component design reports (NCA-3550) have been reconciled.~~Inspections will be performed to verify that the design report has been revised to reflect as-built deviations from the design if applicable.~~	ASME Code Section III Design Reports (NCA-3550) exist and conclude that components listed as ASME Code Section III in Table 2.7.2-1 comply with ASME Code Section III requirements and any deviations to the design report have been reconciled.~~For components listed as ASME Code Section III in Table 2.7.2-1, the as-built component satisfies design requirements of ASME Code Section III as demonstrated in the Design Report (NCA-3550).~~
3.16	Pressure boundary welds on components listed in Table 2.7.2-1 as ASME Code Section III are in accordance with ASME Code Section III requirements.	Inspections of pressure boundary welds will be performed to verify that welding is performed in accordance with ASME Code Section III requirements.	For components listed as ASME Code Section III in Table 2.7.2-1, ASME Code Section III Data Reports (NCA-8000) exist and conclude that pressure boundary welding has been performed in accordance with ASME Code Section III.

Table 2.7.2-3—Safety Chilled Water System ITAAC (6 Sheets)

Commitment Wording		Inspections, Tests, Analyses	Acceptance Criteria
3.17	Components listed in Table 2.7.2-1 as ASME Code Section III retain pressure boundary integrity at design pressure.	Hydrostatic tests will be performed on the components.	For components listed as ASME Code Section III in Table 2.7.2-1, ASME Code Section III Data Reports exist and conclude that hydrostatic test results comply with ASME Code Section III requirements.
3.18	Components listed in Table 2.7.2-1 as ASME Code Section III are installed in accordance with ASME Code Section III requirements.	An inspection of ASME Code Data Reports will be performed.	ASME Code Section III N-5 Data Reports exist and conclude that components listed as ASME Code Section III in Table 2.7.2-1 have been installed in accordance with ASME Code Section III requirements.
4.1	Displays exist or can be retrieved in the MCR and RSS as identified in Table 2.7.2-2.	Tests will be performed for the retrievability of the displays in the MCR or the RSS as listed in Table 2.7.2-2.	a. The displays listed in Table 2.7.2-2 as being retrieved in the MCR can be retrieved in the MCR. b. The displays listed in Table 2.7.2-2 as being retrieved in the RSS can be retrieved in the RSS.
4.2	Controls exist in the MCR and the RSS as identified in Table 2.7.2-2.	Test will be performed for the existence of control signals from the MCR and the RSS to the equipment listed in Table 2.7.2-2.	a. The controls listed in Table 2.7.2-2 as being in the MCR exist in the MCR. b. The controls listed in Table 2.7.2-2 as being in the RSS exist in the RSS.
4.3	Deleted.	Deleted.	Deleted.
4.4	The SCWS has the following interlocks with Division 1 and 2 or Division 3 and 4 cross-tied: The non running division chiller and pump(s) automatically start if the running division chiller or pumps(s) trip.	Tests will be performed using test signals to verify the interlock.	The following interlock responds as specified below when activated by a test signal: With Division 1 and 2 or Division 3 and 4 cross-tied: The non running division chiller and pump(s) automatically start if the running division chiller or pumps(s) trip.

Table 2.7.2-3—Safety Chilled Water System ITAAC (6 Sheets)

Commitment Wording		Inspections, Tests, Analyses	Acceptance Criteria
5.1	The components designated as Class 1E in Table 2.7.2-2 are powered from the Class 1E division as listed in Table 2.7.2-2 in a normal or alternate feed condition.	a. Testing will be performed for components designated as Class 1E in Table 2.7.2-2 by providing a test signal in each normally aligned division. b. Testing will be performed for components designated as Class 1E in Table 2.7.2-2 by providing a test signal in each division with the alternate feed aligned to the divisional pair.	a. The test signal provided in the normally aligned division is present at the respective Class 1E component identified in Table 2.7.2-2. b. The test signal provided in each division with the alternate feed aligned to the divisional pair is present at the respective Class 1E component identified in Table 2.7.2-2.
5.2	Valves listed in Table 2.7.2-2 fail as-is on loss of power.	Testing will be performed for the valves listed in Table 2.7.2-2 to fail as-is on loss of power.	Following loss of power, the valves listed in Table 2.7.2-2 fail as-is.
6.1	Components in Table 2.7.2-2, that are designated as harsh environment, will perform the function listed in Table 2.7.2-1 in the environments that exist during and following design basis events.	a. Type tests or type tests and analysis will be performed to demonstrate the ability of the components listed as harsh environment in Table 2.7.2-2 to perform the function listed in Table 2.7.2-1 for the environmental conditions that could occur during and following design basis events. b. Components listed as harsh environment in Table 2.7.2-2 will be inspected to verify installation in accordance with the construction drawings including the associated wiring, cables and terminations. Deviations to the construction drawings will be reconciled to the EQDP.	a. Environmental Qualification Data Packages (EQDP) exist and conclude that the components listed as harsh environment in Table 2.7.2-2 can perform the function listed in Table 2.7.2-1 during and following design basis events including the time required to perform the listed function. b. Inspection reports exists and conclude that the components listed in Table 2.7.2-2 as harsh environment has been installed per the construction drawings and any deviations have been reconciled to the EQDP.

Table 2.7.2-3—Safety Chilled Water System ITAAC (6 Sheets)

Commitment Wording		Inspections, Tests, Analyses	Acceptance Criteria
7.1	The SCWS chiller refrigerating units shown on Figure 2.7.2-1, have the capacity to provide chilled water at the temperature to support the heat removal requirements of each user.	Tests and analyses will be performed to demonstrate the capability of the SCWS chiller refrigerating units to provide chilled water at a temperature to support the heat removal requirements of all users.	The SCWS chiller refrigerating units have the capacity to provide chilled water at the required temperature of 41°F.
7.2	The pumps listed in Table 2.7.2-1 have NPSHA that is greater than NPSHR at system run-out flow.	Testing will be performed to verify NPSHA for pumps listed in Table 2.7.2-1.	The pumps listed in Table 2.7.2-1 have NPSHA that is NPSHR at the minimum expansion tank level.
7.3	The SCWS delivers water to the equipment listed in Table 2.7.2-1.	Tests and analyses will be performed to determine the SCWS delivery rate under operating conditions.	The SCWS delivers at least the following flowrate to the equipment listed in Table 2.7.2-1. - 30 QKA 10/20/30/40 AP107: 565 gpm - 30 QKA 10/20/30/40 AP108: 565 gpm
7.4	Class 1E valves listed in Table 2.7.2-2 perform the function listed in Table 2.7.2-1 under system operating conditions.	Tests and analyses or a combination of tests and analyses will be performed to demonstrate the ability of the valves listed in Table 2.7.2-2 to change position as listed in Table 2.7.2-1 under system operating conditions.	The valve changes position as listed in Table 2.7.2-1 under system operating conditions.
7.5	The SCWS has provisions to allow full flow testing during plant operation.	Testing of flow of the SCWS through the recirculation loop back to the pump suction will be performed.	The flow test line allows full system flow through the recirculation loop back to the pump suction.
7.6	The SCWS expansion tank maintains a reserve volume to accommodate system leakage for seven days.	Tests and analysis will be performed to verify that the SCWS expansion tank maintains a reserve volume to accommodate system leakage for seven days.	SCWS expansion tank maintains a reserve volume of 100 gallons to accommodate system leakage for seven days.

Next File

Figure 2.7.2-1—Safety Chilled Water System Functional Arrangement
Sheet 1 of 4

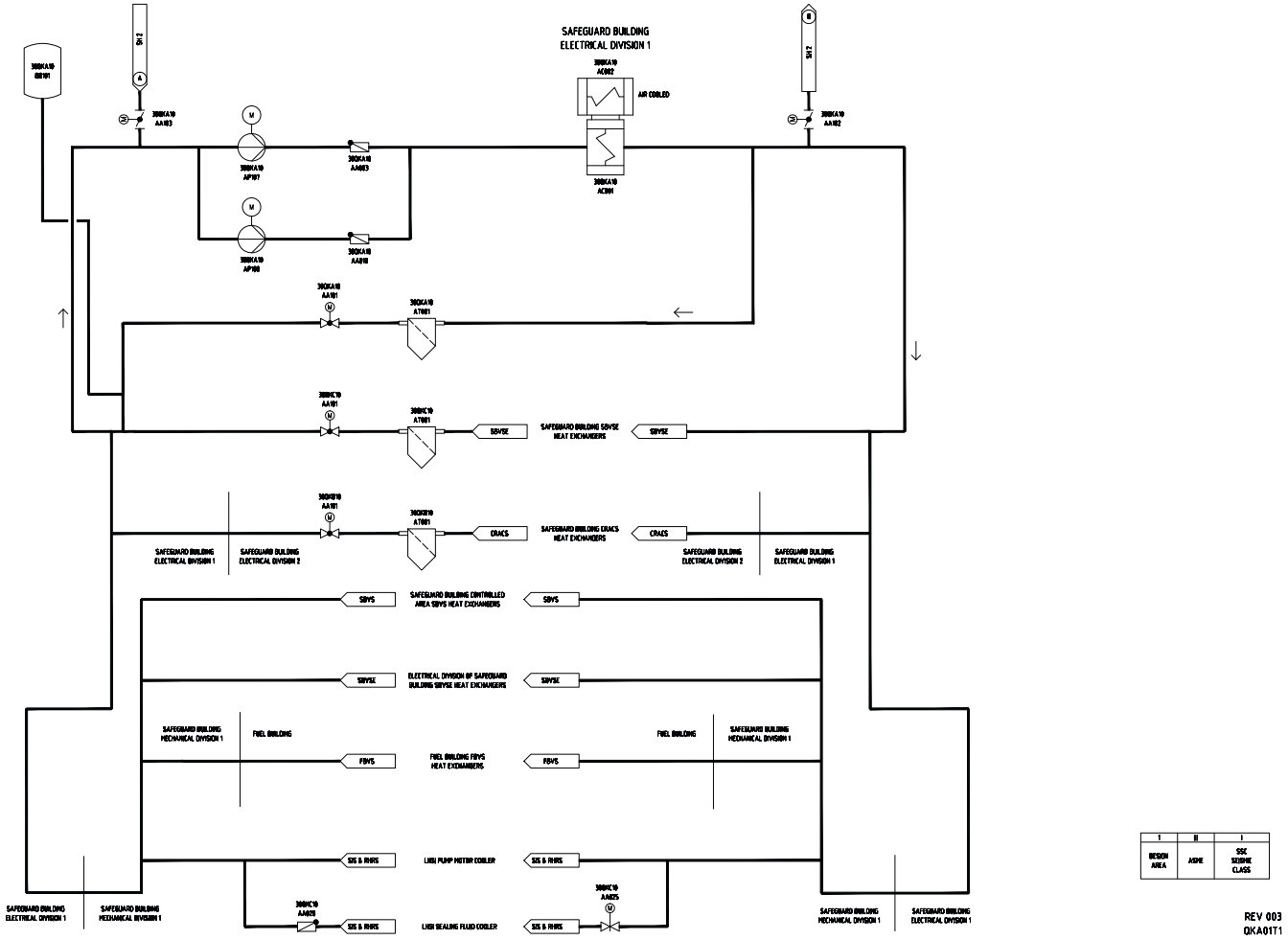

Figure 2.7.2-1—Safety Chilled Water System Functional Arrangement
Sheet 2 of 4

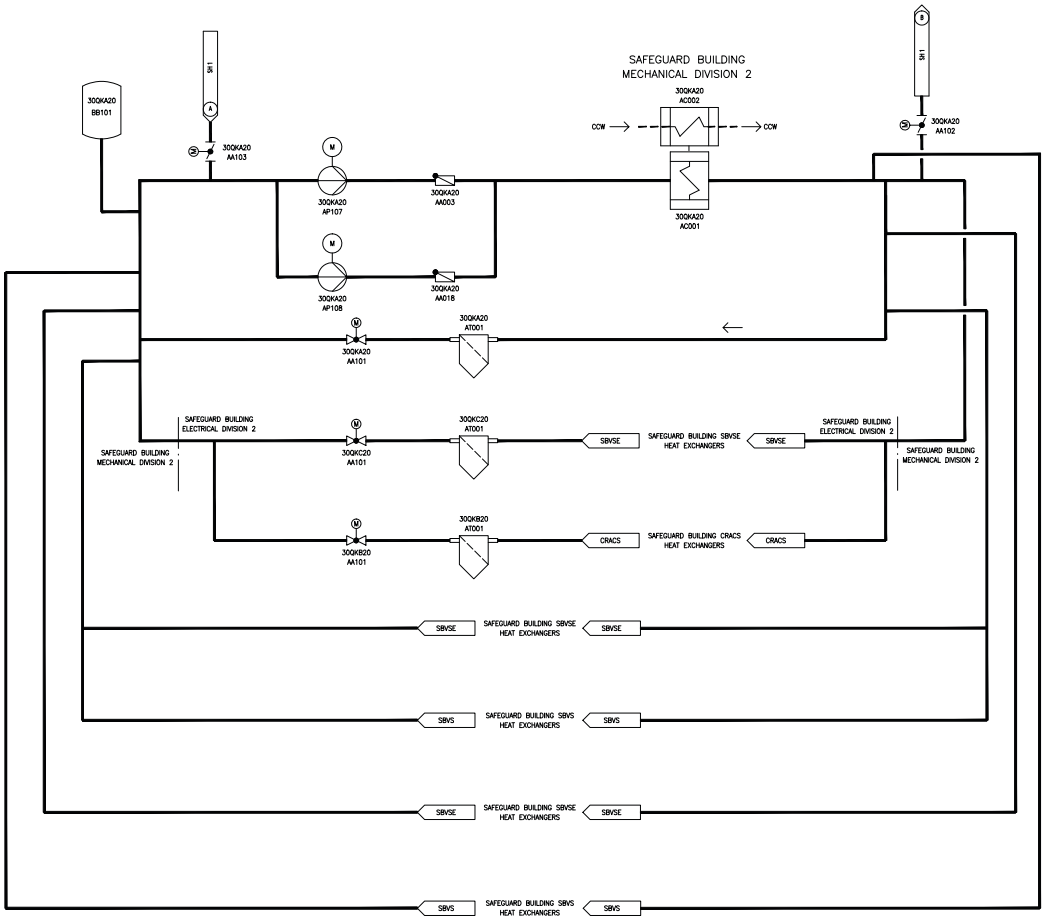

1	III	I
DESIGN AREA	ASME	SSC SEISMIC CLASS

REV 003
QKA02T1

Figure 2.7.2-1—Safety Chilled Water System Functional Arrangement
Sheet 3 of 4

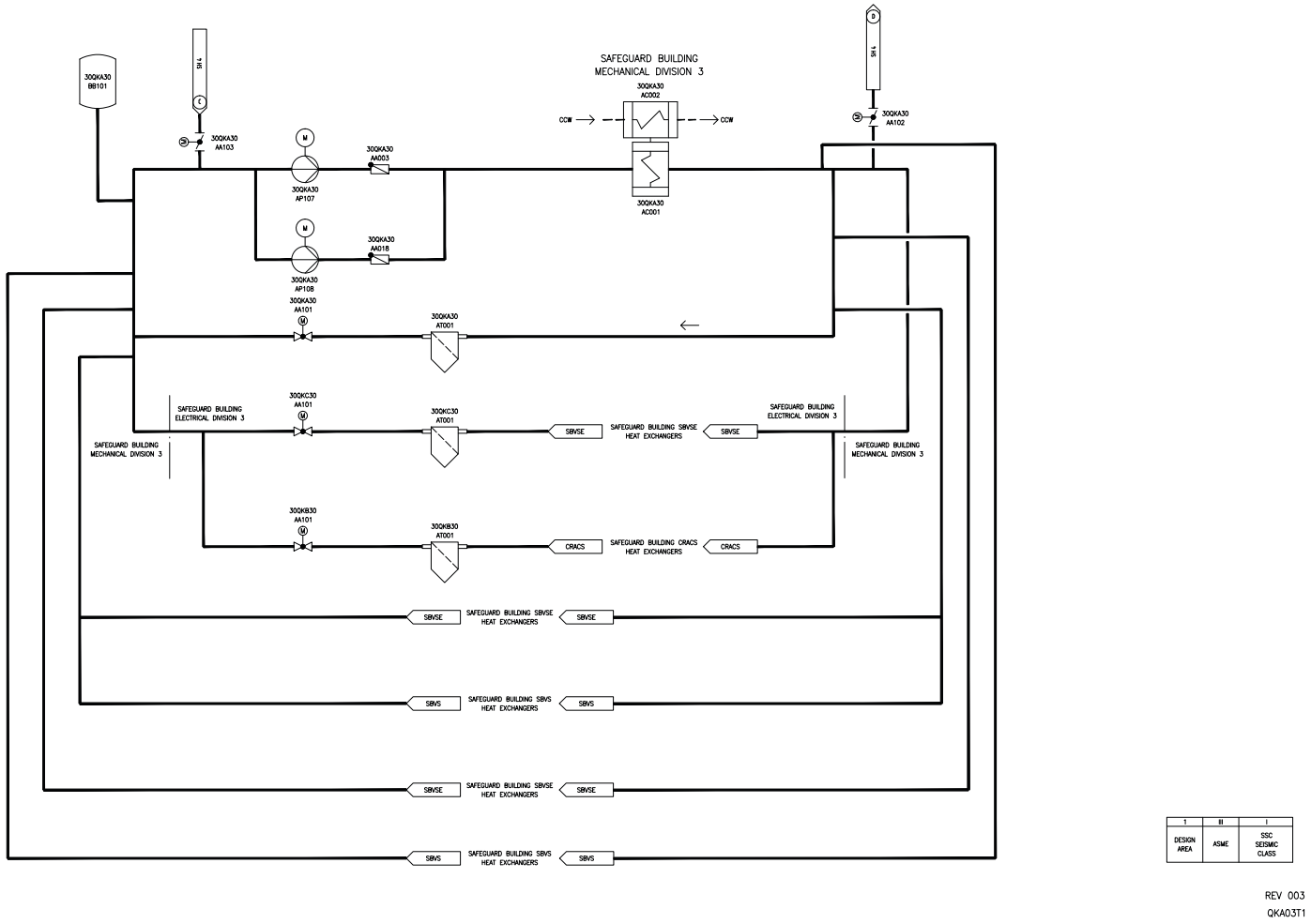

I	III	I
DESIGN AREA	ASME	SSC SEISMIC CLASS

REV 003
QKA03T1

Figure 2.7.2-1—Safety Chilled Water System Functional Arrangement
Sheet 4 of 4

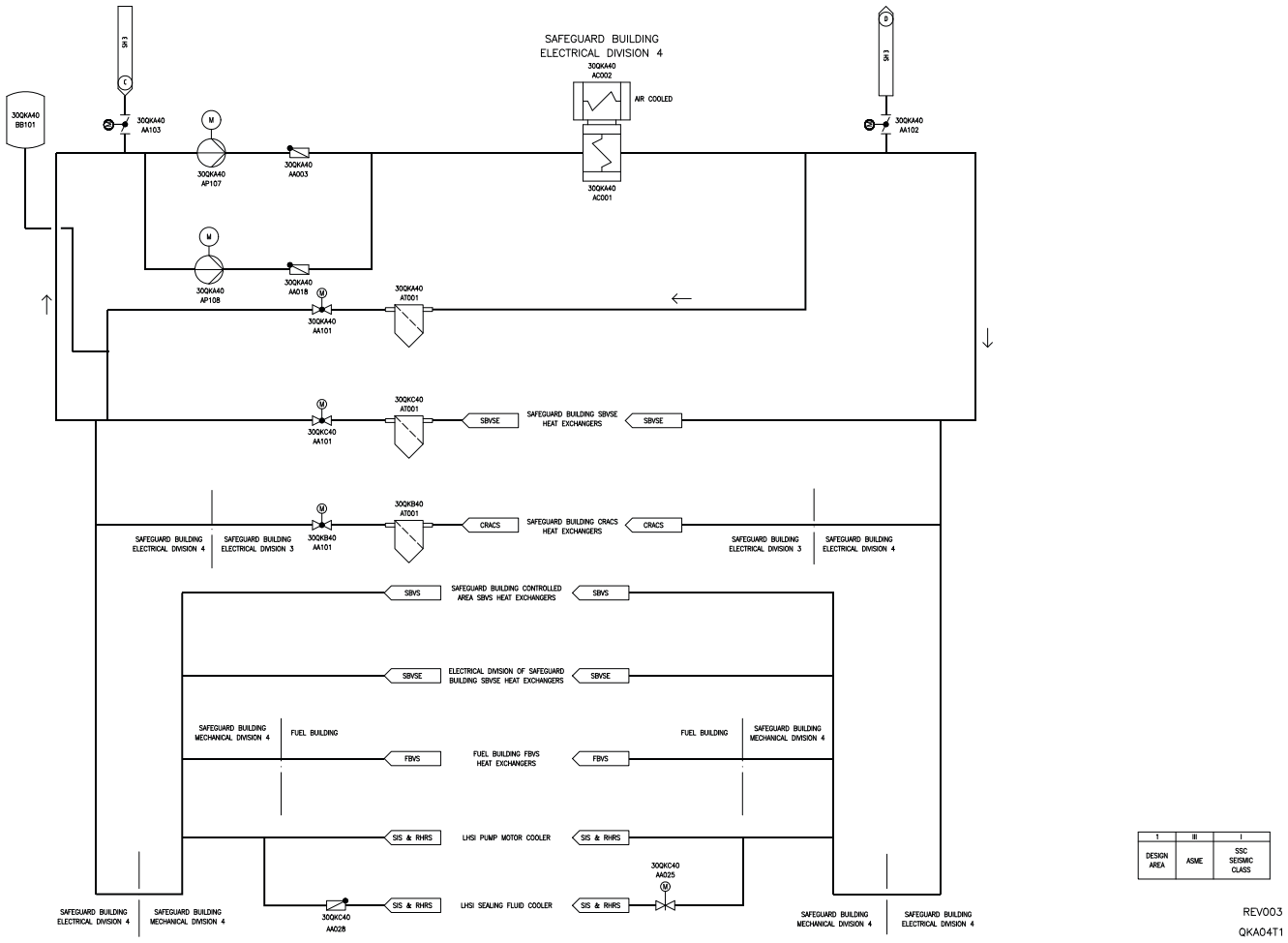

Next File

2.7.11 Essential Service Water System

1.0 Description

The essential service water system (ESWS) is a safety-related system that provides cooling water to the component cooling water system (CCWS) heat exchangers, the emergency diesel generator (EDG) heat exchangers, and the essential service water pump building ventilation system (ESWPBVS) room coolers under normal operating, shutdown/cooldown, design basis events. The Ultimate Heat Sink (UHS) dissipates heat rejected from the ESW during normal operation and post accident shutdown.

The ESWS and UHS provide the following safety-related functions~~The ESWS provides the following safety related functions~~:

- The ESWS provides the capability to transfer heat from CCWS and EDG to the environment following an anticipated operational occurrence (AOO) or postulated accident.
- The ESWS provides continued heat transfer from the fuel pool cooling system (FPCPS) via the CCWS as long as any fuel assemblies are in the spent fuel storage pool located outside containment.
- The UHS provides heat removal from the ESWS during normal operation and accident conditions, and transfers that energy to the environment.
- ~~The ESW emergency makeup water system and blowdown system isolation valves~~ Isolation valves in the ESW emergency makeup, the normal makeup, and the blowdown system flow paths provide automatic isolation of the tower basins under DBA conditions to prevent loss of tower water inventory.
- Each UHS cooling tower basin is sized to contain sufficient water to allow for 72 hours of ESW train operation under DBE conditions without addition of makeup water. The water level in the basin at the end of the 72 hour period is sufficient to meet pump minimum suction head (NPSH) requirements.
- After 72 hours have elapsed since the initiation of design basis event, the ESW emergency makeup water system provides water to the ESW system to replenish cooling water lost to evaporation, drift, blowdown and other losses in order to ensure cooling tower basin water levels remain within established limits under DBE conditions.
- The site specific ESW emergency makeup water system will provide this makeup water for at least 27 days following the initial 72 hour post-accident period (balance of 30 day scenario).

The ESWS provides the following non-safety-related functions:

- The ESWS provides the cooling of the system users during all normal plant operating conditions.
- Deleted.

- The ESW normal makeup water system provides makeup water to the ESW system to replenish cooling water lost to evaporation, drift, and other losses in order to ensure cooling tower basin water levels remain within established limits. The ESW normal makeup water system also provides water to the cooling tower riser keep-fill.

- The ESW system provides the means of transferring heat loads from the dedicated CCW heat exchanger under severe accident conditions to ensure containment integrity.

- Freeze protection is provided by diverting ESW return flow directly to the tower basin and controlling fan operation under low load/low ambient temperature conditions.

The non-safety-related dedicated ESWS train provides water as a cooling medium to the non-safety-related dedicated CCWS train heat exchanger and to the division 4 ESWS ESWPBVS room cooler for the removal of reject heat under severe accident conditions.

2.0 Arrangement

2.1 The functional arrangement of the ESWS and UHS is as shown in Figure 2.7.11-1—Essential Service Water System Functional Arrangement.~~The functional arrangement of the ESWS is as shown on Figure 2.7.11-1—Essential Service Water System Functional Arrangement.~~

2.2 The location of the ESWS equipment is as listed in Table 2.7.11-1—Essential Service Water System Equipment Mechanical Design.

2.3 Physical separation exists between divisions of the ESWS.

2.4 Deleted.

2.5 Deleted.

3.0 Mechanical Design Features

3.1 Deleted.

3.2 Check valves listed in Table 2.7.11-1 will function as listed in Table 2.7.11-1.

3.3 Deleted.

3.4 Components identified as Seismic Category I in Table 2.7.11-1 can withstand seismic design basis loads without a loss of the function listed in Table 2.7.11-1.

3.5 Components listed in Table 2.7.11-1 as ASME Code Section III are designed in accordance with ASME Code Section III requirements.

3.6 Components listed in Table 2.7.11-1 as ASME Code Section III are fabricated in accordance with ASME Code Section III requirements.

3.7 Pressure boundary welds on components listed in Table 2.7.11-1 as ASME Code Section III are in accordance with ASME Code Section III requirements.

3.8 Components listed in Table 2.7.11-1 as ASME Code Section III retain pressure boundary integrity at design pressure.

3.9 Deleted.

3.10 Deleted.

3.11 Deleted.

3.12 ESWS piping shown as ASME Code Section III on Figure 2.7.11-1 is designed in accordance with ASME Code Section III requirements.

3.13 ESWS piping shown as ASME Code Section III on Figure 2.7.11-1 is installed in accordance with an ASME Code Section III Design Report.

3.14 Pressure boundary welds in ESWS piping shown as ASME Code Section III on Figure 2.7.11-1 are in accordance with ASME Code Section III.

3.15 ESWS piping shown as ASME Code Section III on Figure 2.7.11-1 retains pressure boundary integrity at design pressure.

3.16 ~~ESWS piping shown as ASME Code Section III on Figure 2.7.11-1 is installed and inspected in accordance with ASME Code Section III requirements~~Deleted.

3.17 Components listed in Table 2.7.11-1 as ASME Code Section III are installed in accordance with ASME Code Section III requirements.

3.18 The UHS fans are capable of withstanding the effects of tornado including differential pressure effects, overspeed, and the impact of differential pressure effects on other equipment located within the cooling tower structure (e.g., capability to function, potential to become missile/debris hazard).

4.0 I&C Design Features, Displays and Controls

4.1 Displays listed in Table 2.7.11-2— Essential Service Water System Equipment I&C and Electrical Design are retrievable in the main control room (MCR) and the remote shutdown station (RSS) as listed in Table 2.7.11-2.

4.2 The ESWS equipment controls are provided in the MCR and the RSS as listed in Table 2.7.11-2.

4.3 Equipment listed as being controlled by a priority and actuator control system (PACS) module in Table 2.7.11-2 responds to the state requested by a test signal.

4.4 If one ESWS pump (30PEB10/20/30/40 AP001) fails during normal operation, a switchover to the other ESWS train is carried out automatically for the entire cooling train and is initiated by the CCWS Switchover sequence.

4.5 A spurious closure of the ESWS pump discharge valve (30PEB10/20/30/40 AA005) results in a switchover to the other ESWS train automatically for the entire cooling train and is initiated by the CCWS Switchover sequence.

4.6 Deleted.

4.7 Deleted.

5.0 Electrical Power Design Features

5.1 The components designated as Class 1E in Table 2.7.11-2 are powered from the Class 1E division as listed in Table 2.7.11-2 in a normal or alternate feed condition.

5.2 Valves listed in Table 2.7.11-2 fail as-is on loss of power.

5.3 Deleted.

5.4 Items identified in Table 2.7.11-2 as "Dedicated" ESWS motor-operated components (including Division 4 cooling tower fans) are capable of being supplied by a SBODG.

6.0 Environmental Qualifications

6.1 Deleted.

7.0 Equipment and System Performance

7.1 The ESWS UHS as listed in Table 2.7.11-1 has the capacity to remove the ~~design T~~total Max ~~heat~~ Heat ~~load~~ Load from the CCWS and EDG heat exchangers, and the ESWPBVS room cooler, and the ESW pump mechanical work.

7.2 The pumps listed in Table 2.7.11-1 have sufficient net positive suction head available (NPSHA) ~~that is greater than net positive suction head required (NPSHR) at system run-out flow~~.

7.3 Class 1E valves listed in Table 2.7.11-2 can perform the function listed in Table 2.7.11-1 under system operating conditions.

7.4 The ESWS provides for flow testing of the ESWS pumps during plant operation.

7.5 Deleted.

7.6 The ESWS delivers water to the CCWS and EDG heat exchangers and the ESWPBVS room cooler~~s~~.

7.7 The ESWS debris filters listed in Table 2.7.11-1 function to backwash upon high differential pressure.

7.8 The inlet between the cooling tower basin and pump intake structure has a coarse and a fine debris screen for each ESW pump.

7.9 The ~~ESWS and the~~ UHS cooling towers~~, including the site-specific emergency makeup water system,~~ are capable of removing the design basis heat load ~~for a minimum of30~~

~~days following a design basis accident assuming the most limiting ambient conditions for heat removal and~~ without exceeding the maximum specified temperature limit for ESWS.

7.10 The ~~ESWS and the~~ UHS cooling towers~~, including the site-specific emergency makeup water system,~~ are capable of removing the design basis heat load ~~for a minimum of30 days following a design basis accident assuming the most limiting ambient conditions for water usage and~~ without water level dropping below the minimum required level in the cooling towers.

7.11 The cooling tower basin is sized for the minimum basin water volume.

8.0 Interface Requirements

8.1 The site specific emergency makeup water system provides ≥300 gpm makeup water to each ESW cooling tower basin to maintain the minimum basin water level.

8.2 The site-specific emergency makeup water system provides water to each ESW cooling tower basin at a temperature below the maximum ESWS supply temperature of 95°F.

8.3 The site-specific emergency makeup water system is designed in accordance with ASME Section III, Class 3 safety-related SSC and Seismic Category I requirements.

8.4 The site-specific emergency makeup water system provides a means to limit corrosion, scaling, and biological contaminants in order to minimize component fouling for a minimum of 30 days post-DBA.

9.0 Inspections, Tests, Analyses, and Acceptance Criteria

Table 2.7.11-3 lists the ESWS ITAAC.

Table 2.7.11-1—Essential Service Water System Equipment Mechanical Design (6 Sheets)

Description	Tag Number (1)	Location	ASME Code Section III	Function	Seismic Category
ESWS Pump Division 1	30PEB10AP001	ESW Pump Structure Division 1	Yes	Run	I
Recirc Isolation Valve Division 1	30PEB10AA002	ESW Pump Structure Division 1	Yes	Close	I
Emer. Blowdown Isolation Valve Division 1	30PEB10AA003	ESW Pump Structure Division 1	Yes	Close	I
Filter Emergency Blowdown Isolation Valve Division 1	30 PEB10 AA004	ESW Pump Structure Division 1	Yes	Open	I
Filter Emergency Blowdown Isolation Valve Division 2	30 PEB20 AA004	ESW Pump Structure Division 2	Yes	Open	I
Filter Emergency Blowdown Isolation Valve Division 3	30 PEB30 AA004	ESW Pump Structure Division 3	Yes	Open	I
Filter Emergency Blowdown Isolation Valve Division 4	30 PEB40 AA004	ESW Pump Structure Division 4	Yes	Open	I
Pump Discharge Isolation Valve Division 1	30PEB10AA005	ESW Pump Structure Division 1	Yes	Open	I
Filter Blowdown Isolation Valve Division 1	30PEB10AA015	ESW Pump Structure Division 1	Yes	Close	I
Blowdown Isolation Valve Division 1	30PEB10AA016	ESW Pump Structure Division 1	Yes	Close	I

Table 2.7.11-1—Essential Service Water System Equipment Mechanical Design (6 Sheets)

Description	Tag Number (1)	Location	ASME Code Section III	Function	Seismic Category
Pump Discharge Check Valve Division 1	30PEB10AA204	ESW Pump Structure Division 1	Yes	Open	I
ESW Debris Filter Division 1	30PEB10AT002	ESW Pump Structure Division 1	Yes	Backwash	I
Tower -Isolation Valve Division 1	30PED10AA010	ESW Pump Structure Division 1	Yes	Open	I
Tower Bypass Isolation Valve Division 1	30PED10AA011	ESW Pump Structure Division 1	Yes	Close	I
Makeup Water Isolation Valve Division 1	30PED10AA019	ESW Pump Structure Division 1	Yes	Close	I
Emer. Makeup Water Isolation Valve Division 1	30PED10AA021	ESW Pump Structure Division 1	Yes	Open	I
Tower Keep-Fill Isolation Valve Division 1	30PED10AA024	ESW Pump Structure Division 1	Yes	Close	I
Tower Keep-Fill Check Valve Division 1	30PED10AA025	ESW Pump Structure Division 1	Yes	Close	I
Makeup Water Check Valve Division 1	30PED10AA220	ESW Pump Structure Division 1	Yes	Close	I
ESWS Pump Division 2	30PEB20AP001	ESW Pump Structure Division 2	Yes	Run	I
Recirc Isolation Valve Division 2	30PEB20AA002	ESW Pump Structure Division 2	Yes	Close	I

Table 2.7.11-1—Essential Service Water System Equipment Mechanical Design (6 Sheets)

Description	Tag Number (1)	Location	ASME Code Section III	Function	Seismic Category
Emer. Blowdown Isolation Valve Division 2	30PEB20AA003	ESW Pump Structure Division 2	Yes	Close	I
Pump Discharge Isolation Valve Division 2	30PEB20AA005	ESW Pump Structure Division 2	Yes	Open	I
Filter Blowdown Isolation Valve Division 2	30PEB20AA015	ESW Pump Structure Division 2	Yes	Close	I
Blowdown Isolation Valve Division 2	30PEB20AA016	ESW Pump Structure Division 2	Yes	Close	I
Pump Discharge Check Valve Division 2	30PEB20AA204	ESW Pump Structure Division 2	Yes	Open	I
ESW Debris Filter Division 2	30PEB20AT002	ESW Pump Structure Division 2	Yes	Backwash	I
Tower Isolation Valve Division 2	30PED20AA010	ESW Pump Structure Division 2	Yes	Open	I
Tower Bypass Isolation Valve Division 2	30PED20AA011	ESW Pump Structure Division 2	Yes	Close	I
Makeup Water Isolation Valve Division 2	30PED20AA019	ESW Pump Structure Division 2	Yes	Close	I
Emer. Makeup Water Isolation Valve Division 2	30PED20AA021	ESW Pump Structure Division 2	Yes	Open	I

Table 2.7.11-1—Essential Service Water System Equipment Mechanical Design (6 Sheets)

Description	Tag Number (1)	Location	ASME Code Section III	Function	Seismic Category
Tower Keep-Fill Isolation Valve Division 2	30PED20AA024	ESW Pump Structure Division 2	Yes	Close	I
Tower Keep-Fill Check Valve Division 2	30PED20AA025	ESW Pump Structure Division 2	Yes	Close	I
Makeup Water Check Valve Division 2	30PED20AA220	ESW Pump Structure Division 2	Yes	Close	I
ESWS Pump Division 3	30PEB30AP001	ESW Pump Structure Division 3	Yes	Run	I
Recirc Isolation Valve Division 3	30PEB30AA002	ESW Pump Structure Division 3	Yes	Close	I
Emer. Blowdown Isolation Valve Division 3	30PEB30AA003	ESW Pump Structure Division 3	Yes	Close	I
Pump Discharge Isolation Valve Division 3	30PEB30AA005	ESW Pump Structure Division 3	Yes	Open	I
Filter Blowdown Isolation Valve Division 3	30PEB30AA015	ESW Pump Structure Division 3	Yes	Close	I
Blowdown Isolation Valve Division 3	30PEB30AA016	ESW Pump Structure Division 3	Yes	Close	I
Pump Discharge Check Valve Division 3	30PEB30AA204	ESW Pump Structure Division 3	Yes	Open	I

Table 2.7.11-1—Essential Service Water System Equipment Mechanical Design (6 Sheets)

Description	Tag Number (1)	Location	ASME Code Section III	Function	Seismic Category
ESW Debris Filter Division 3	30PEB30AT002	ESW Pump Structure Division 3	Yes	Backwash	I
Tower Isolation Valve Division 3	30PED30AA010	ESW Pump Structure Division 3	Yes	Open	I
Tower Bypass Isolation Valve Division 3	30PED30AA011	ESW Pump Structure Division 3	Yes	Close	I
Makeup Water Isolation Valve Division 3	30PED30AA019	ESW Pump Structure Division 3	Yes	Close	I
Emer. Makeup Water Isolation Valve Division 3	30PED30AA021	ESW Pump Structure Division 3	Yes	Open	I
Tower Keep-Fill Isolation Valve Division 3	30PED30AA024	ESW Pump Structure Division 3	Yes	Close	I
Tower Keep-Fill Check Valve Division 3	30PED30AA025	ESW Pump Structure Division 3	Yes	Close	I
Makeup Water Check Valve Division 3	30PED30AA220	ESW Pump Structure Division 3	Yes	Close	I
ESWS Pump Division 4	30PEB40AP001	ESW Pump Structure Division 4	Yes	Run	I
Recirc Isolation Valve Division 4	30PEB40AA002	ESW Pump Structure Division 4	Yes	Close	I

Table 2.7.11-1—Essential Service Water System Equipment Mechanical Design (6 Sheets)

Description	Tag Number (1)	Location	ASME Code Section III	Function	Seismic Category
Emer. Blowdown Isolation Valve Division 4	30PEB40AA003	ESW Pump Structure Division 4	Yes	Close	I
Pump Discharge Isolation Valve Division 4	30PEB40AA005	ESW Pump Structure Division 4	Yes	Open	I
Filter Blowdown Isolation Valve Division 4	30PEB40AA015	ESW Pump Structure Division 4	Yes	Close	I
Blowdown Isolation Valve Division 4	30PEB40AA016	ESW Pump Structure Division 4	Yes	Close	I
Pump Discharge Check Valve Division 4	30PEB40AA204	ESW Pump Structure Division 4	Yes	Open	I
Dedicated System Check Valve Upstr 30saq40 Ac001 Division 4	30PEB41AA011	ESW Pump Structure Division 4	Yes	Open	I
ESW Debris Filter Division 4	30PEB40AT002	ESW Pump Structure Division 4	Yes	Backwash	I
Tower Isolation Valve Division 4	30PED40AA010	ESW Pump Structure Division 4	Yes	Open	I
Tower Bypass Isolation Valve Division 4	30PED40AA011	ESW Pump Structure Division 4	Yes	Close	I

Table 2.7.11-1—Essential Service Water System Equipment Mechanical Design (6 Sheets)

Description	Tag Number (1)	Location	ASME Code Section III	Function	Seismic Category
Makeup Water Isolation Valve Division 4	30PED40AA019	ESW Pump Structure Division 4	Yes	Close	I
Emer. Makeup Water Isolation Valve Division 4	30PED40AA021	ESW Pump Structure Division 4	Yes	Open	I
Tower Keep-Fill Isolation Valve Division 4	30PED40AA024	ESW Pump Structure Division 4	Yes	Close	I
Tower Keep-Fill Check Valve Division 4	30PED40AA025	ESW Pump Structure Division 4	Yes	Close	I
Makeup Water Check Valve Division 4	30PED40AA220	ESW Pump Structure Division 4	Yes	Close	I
Dedicated Isolation Valve Upstr KAA80AC001	30PEB80AA003	ESW Dedicated Division Safeguard Building 4	No	Open	N/A
Dedicated Isolation Valve Dnstr KAA80AC001	30PEB80AA004	ESW Dedicated Division Safeguard Building 4	Yes	Open	I
Dedicated ESW Pump	30PEB80AP001	ESW Pump Structure Division 4	No	Run	N/A
Dedicated Filter Blowdown Isolation Valve ~~Dedicated Blowdown Isolation Valve~~	30PEB80AA009	ESW Pump Structure Division 4	No	Close	N/A

Table 2.7.11-1—Essential Service Water System Equipment Mechanical Design (6 Sheets)

Description	Tag Number (1)	Location	ASME Code Section III	Function	Seismic Category
Dedicated Blowdown Isolation Valve ~~Dedicated Filter Blowdown Isolation Valve~~	30PEB80AA016	ESW Pump Structure Division 4	No	Close	N/A
Dedicated Recirc Isolation Valve	30PEB80AA015	ESW Pump Structure Division 4	No	Close	N/A
Dedicated Filter Blowdown Isolation Check Valve	30PEB80AA211	ESW Pump Structure Division 4	No	Close	N/A
Dedicated Pump Isolation Check Valve	30PEB80AA002	ESW Pump Structure Division 4	No	Open	N/A
Dedicated ESW Debris Filter	30PEB80AT001	ESW Pump Structure Division 4	No	Backwash	N/A
Cooling Tower Fan	30PED10AN001	ESW Cooling Tower Division 1	No	Run	I
Cooling Tower Fan	30PED10AN002	ESW Cooling Tower Division 1	No	Run	I
Cooling Tower Fan	30PED20AN001	ESW Cooling Tower Division 2	No	Run	I
Cooling Tower Fan	30PED20AN002	ESW Cooling Tower Division 2	No	Run	I
Cooling Tower Fan	30PED30AN001	ESW Cooling Tower Division 3	No	Run	I
Cooling Tower Fan	30PED30AN002	ESW Cooling Tower Division 3	No	Run	I
Cooling Tower Fan	30PED40AN001	ESW Cooling Tower Division 4	No	Run	I

Table 2.7.11-1—Essential Service Water System Equipment Mechanical Design (6 Sheets)

Description	Tag Number (1)	Location	ASME Code Section III	Function	Seismic Category
Cooling Tower Fan	30PED40AN002	ESW Cooling Tower Division 4	No	Run	I
~~Dedicated Emergency Blowdown Isolation Valve~~	~~30PEB80AA003~~	~~ESW Pump Structure Division 4~~	~~No~~	~~Close~~	~~N/A~~
Mechanical Draft Cooling Tower Train 1 (excluding fans)	30PED10AC001	ESW Cooling Tower Structure 1	Yes	Heat Transfer Device	I
Mechanical Draft Cooling Tower Train 2 (excluding fans)	30PED20AC001	ESW Cooling Tower Structure 2	Yes	Heat Transfer Device	I
Mechanical Draft Cooling Tower Train 3 (excluding fans)	30PED30AC001	ESW Cooling Tower Structure 3	Yes	Heat Transfer Device	I
Mechanical Draft Cooling Tower Train 4 (excluding fans)	30PED40AC001	ESW Cooling Tower Structure 4	Yes	Heat Transfer Device	I

1) Equipment tag numbers are provided for information only and are not part of the certified design.

Table 2.7.11-2—Essential Service Water System Equipment I&C and Electrical Design (6 Sheets)

Description	Tag Number (1)	Location	IEEE Class 1E (2)(3)	PACS	MCR/RSS Displays	MCR/RSS Controls
ESWS Pump Division 1	30PEB10AP001	ESW Pump Structure Division 1	Division 1	Yes	On-Off/ On-Off	Start-Stop/ Start-Stop
Recirc Isolation Valve Division 1	30PEB10AA002	ESW Pump Structure Division 1	Division 1	Yes	Pos/N/A	Open-Close/N/A
Emer. Blowdown Isolation Valve Division 1	30PEB10AA003	ESW Pump Structure Division 1	Division 1	Yes	Pos/N/A	Open-Close/N/A
Filter Emergency Blowdown Isolation Valve Division 1	30 PEB10 AA004	ESW Pump Structure Division 1	Division 1	Yes	Pos/NA	Open-Close/N/A
Filter Emergency Blowdown Isolation Valve Division 2	30 PEB20 AA004	ESW Pump Structure Division 2	Division 2	Yes	Pos/NA	Open-Close/N/A
Filter Emergency Blowdown Isolation Valve Division 3	30 PEB30 AA004	ESW Pump Structure Division 3	Division 3	Yes	Pos/NA	Open-Close/N/A
Filter Emergency Blowdown Isolation Valve Division 4	30 PEB40 AA004	ESW Pump Structure Division 4	Division 4	Yes	Pos/NA	Open-Close/N/A
Pump Discharge Isolation Valve Division 1	30PEB10AA005	ESW Pump Structure Division 1	Division 1	Yes	Pos/Pos	Open-Close/Open-Close
Filter Blowdown Isolation Valve Division 1	30PEB10AA015	ESW Pump Structure Division 1	Division 1	Yes	Pos/N/A	Open-Close/N/A

Table 2.7.11-2—Essential Service Water System Equipment I&C and Electrical Design (6 Sheets)

Description	Tag Number (1)	Location	IEEE Class 1E (2)(3)	PACS	MCR/RSS Displays	MCR/RSS Controls
Blowdown Isolation Valve Division 1	30PEB10AA016	ESW Pump Structure Division 1	Division 1	Yes	Pos/N/A	Open-Close/N/A
ESW Debris Filter Division 1	30PEB10AT002	ESW Pump Structure Division 1	Division 1	Yes	On-Off/ On-Off	Start-Stop/ Start-Stop
Tower Isolation Valve Division 1	30PED10AA010	ESW Pump Structure Division 1	Division 1	Yes	Pos/N/A	Open-Close/N/A
Tower Bypass Isolation Valve Division 1	30PED10AA011	ESW Pump Structure Division 1	Division 1	Yes	Pos/N/A	Open-Close/N/A
Makeup Water Isolation Valve Division 1	30PED10AA019	ESW Pump Structure Division 1	Division 1	Yes	Pos/N/A	Open-Close/N/A
Emer. Makeup Water Isolation Valve Division 1	30PED10AA021	ESW Pump Structure Division 1	Division 1	Yes	Pos/N/A	Open-Close/N/A
ESWS Pump Division 2	30PEB20AP001	ESW Pump Structure Division 2	Division 2	Yes	On-Off/ On-Off	Start-Stop/ Start-Stop
Recirc Isolation Valve Division 2	30PEB20AA002	ESW Pump Structure Division 2	Division 2	Yes	Pos/N/A	Open-Close/N/A
Emer. Blowdown Isolation Valve Division 2	30PEB20AA003	ESW Pump Structure Division 2	Division 2	Yes	Pos/N/A	Open-Close/N/A
Pump Discharge Isolation Valve Division 2	30PEB20AA005	ESW Pump Structure Division 2	Division 2	Yes	Pos/Pos	Open-Close/Open-Close

Table 2.7.11-2—Essential Service Water System Equipment I&C and Electrical Design (6 Sheets)

Description	Tag Number (1)	Location	IEEE Class 1E (2)(3)	PACS	MCR/RSS Displays	MCR/RSS Controls
Filter Blowdown Isolation Valve Division 2	30PEB20AA015	ESW Pump Structure Division 2	Division 2	Yes	Pos/N/A	Open-Close/N/A
Blowdown Isolation Valve Division 2	30PEB20AA016	ESW Pump Structure Division 2	Division 2	Yes	Pos/N/A	Open-Close/N/A
ESW Debris Filter Division 2	30PEB20AT002	ESW Pump Structure Division 2	Division 2	Yes	On-Off/ On-Off	Start-Stop/ Start-Stop
Tower Isolation Valve Division 2	30PED20AA010	ESW Pump Structure Division 2	Division 2	Yes	Pos/N/A	Open-Close/N/A
Tower Bypass Isolation Valve Division 2	30PED20AA011	ESW Pump Structure Division 2	Division 2	Yes	Pos/N/A	Open-Close/N/A
Makeup Water Isolation Valve Division 2	30PED20AA019	ESW Pump Structure Division 2	Division 2	Yes	Pos/N/A	Open-Close/N/A
Emer. Makeup Water Isolation Valve Division 2	30PED20AA021	ESW Pump Structure Division 2	Division 2	Yes	Pos/N/A	Open-Close/N/A
ESWS Pump Division 3	30PEB30AP001	ESW Pump Structure Division 3	Division 3	Yes	On-Off/ On-Off	Start-Stop/ Start-Stop
Recirc Isolation Valve Division 3	30PEB30AA002	ESW Pump Structure Division 3	Division 3	Yes	Pos/N/A	Open-Close/N/A
Emer. Blowdown Isolation Valve Division 3	30PEB30AA003	ESW Pump Structure Division 3	Division 3	Yes	Pos/N/A	Open-Close/N/A

Table 2.7.11-2—Essential Service Water System Equipment I&C and Electrical Design (6 Sheets)

Description	Tag Number (1)	Location	IEEE Class 1E (2)(3)	PACS	MCR/RSS Displays	MCR/RSS Controls
Pump Discharge Isolation Valve Division 3	30PEB30AA005	ESW Pump Structure Division 3	Division 3	Yes	Pos/Pos	Open-Close/Open-Close
Filter Blowdown Isolation Valve Division 3	30PEB30AA015	ESW Pump Structure Division 3	Division 3	Yes	Pos/N/A	Open-Close/N/A
Blowdown Isolation Valve Division 3	30PEB30AA016	ESW Pump Structure Division 3	Division 3	Yes	Pos/N/A	Open-Close/N/A
ESW Debris Filter Division 3	30PEB30AT002	ESW Pump Structure Division 3	Division 3	Yes	On-Off/ On-Off	Start-Stop/ Start-Stop
Tower Isolation Valve Division 3	30PED30AA010	ESW Pump Structure Division 3	Division 3	Yes	Pos/N/A	Open-Close/N/A
Tower Bypass Isolation Valve Division 3	30PED30AA011	ESW Pump Structure Division 3	Division 3	Yes	Pos/N/A	Open-Close/N/A
Makeup Water Isolation Valve Division 3	30PED30AA019	ESW Pump Structure Division 3	Division 3	Yes	Pos/N/A	Open-Close/N/A
Emer. Makeup Water Isolation Valve Division 3	30PED30AA021	ESW Pump Structure Division 3	Division 3	Yes	Pos/N/A	Open-Close/N/A
ESWS Pump Division 4	30PEB40AP001	ESW Pump Structure Division 4	Division 4	Yes	On-Off/ On-Off	Start-Stop/ Start-Stop
Recirc Isolation Valve Division 4	30PEB40AA002	ESW Pump Structure Division 4	Division 4	Yes	Pos/N/A	Open-Close/N/A

Table 2.7.11-2—Essential Service Water System Equipment I&C and Electrical Design (6 Sheets)

Description	Tag Number (1)	Location	IEEE Class 1E (2)(3)	PACS	MCR/RSS Displays	MCR/RSS Controls
Emer. Blowdown Isolation Valve Division 4	30PEB40AA003	ESW Pump Structure Division 4	Division 4	Yes	Pos/N/A	Open-Close/N/A
Pump Discharge Isolation Valve Division 4	30PEB40AA005	ESW Pump Structure Division 4	Division 4	Yes	Pos/Pos	Open-Close/Open-Close
Filter Blowdown Isolation Valve Division 4	30PEB40AA015	ESW Pump Structure Division 4	Division 4	Yes	Pos/N/A	Open-Close/N/A
Blowdown Isolation Valve Division 4	30PEB40AA016	ESW Pump Structure Division 4	Division 4	Yes	Pos/N/A	Open-Close/N/A
ESW Debris Filter Division 4	30PEB40AT002	ESW Pump Structure Division 4	Division 4	Yes	On-Off/ On-Off	Start-Stop/ Start-Stop
Tower Isolation Valve Division 4	30PED40AA010	ESW Pump Structure Division 4	Division 4	Yes	Pos/N/A	Open-Close/N/A
Tower Bypass Isolation Valve Division 4	30PED40AA011	ESW Pump Structure Division 4	Division 4	Yes	Pos/N/A	Open-Close/N/A
Makeup Water Isolation Valve Division 4	30PED40AA019	ESW Pump Structure Division 4	Division 4	Yes	Pos/N/A	Open-Close/N/A
Emer. Makeup Water Isolation Valve Division 4	30PED40AA021	ESW Pump Structure Division 4	Division 4	Yes	Pos/N/A	Open-Close/N/A

Table 2.7.11-2—Essential Service Water System Equipment I&C and Electrical Design (6 Sheets)

Description	Tag Number (1)	Location	IEEE Class 1E (2)(3)	PACS	MCR/RSS Displays	MCR/RSS Controls
Dedicated ESW Pump	30PEB80AP001	ESW Pump Structure Division 4	Division 4	Yes	On-Off/ On-Off	Start-Stop/ Start-Stop
Dedicated Blowdown Isolation Valve ~~Dedicated Filter Blowdown Isolation Valve~~	30PEB80AA009	ESW Pump Structure Division 4	Division 4	Yes	Pos/N/A	Open-Close/N/A
Dedicated Filter Blowdown Isolation Valve ~~Dedicated Blowdown Isolation Valve~~	30PEB80AA016	ESW Pump Structure Division 4	Division 4	Yes	Pos/N/A	Open-Close/N/A
Dedicated Recirc Isolation Valve	30PEB80AA015	ESW Pump Structure Division 4	Division 4	Yes	Pos/N/A	Open-Close/N/A
~~Dedicated Emergency Blowdown Isolation Valve~~	~~30PEB80AA003~~	~~ESW Pump Structure Division 4~~	~~Division 4~~	~~Yes~~	~~Pos/N/A~~	~~Open-Close/N/A~~
Dedicated ESW Debris Filter	30PEB80AT001	ESW Pump Structure Division 4	Division 4	Yes	On-Off/ On-Off	Start-Stop/ Start-Stop
Cooling Tower Fan	30PED10AN001	ESW Cooling Tower, Division 1	Division 1	Yes	On-Off/ On-Off	Start-Stop/ Start-Stop
Cooling Tower Fan	30PED10AN002	ESW Cooling Tower, Division 1	Division 1	Yes	On-Off/ On-Off	Start-Stop/ Start-Stop
Cooling Tower Fan	30PED20AN001	ESW Cooling Tower, Division 2	Division 2	Yes	On-Off/ On-Off	Start-Stop/ Start-Stop

Table 2.7.11-2—Essential Service Water System Equipment I&C and Electrical Design (6 Sheets)

Description	Tag Number (1)	Location	IEEE Class 1E (2)(3)	PACS	MCR/RSS Displays	MCR/RSS Controls
Cooling Tower Fan	30PED20AN002	ESW Cooling Tower, Division 2	Division 2	Yes	On-Off/ On-Off	Start-Stop/ Start-Stop
Cooling Tower Fan	30PED30AN001	ESW Cooling Tower, Division 3	Division 3	Yes	On-Off/ On-Off	Start-Stop/ Start-Stop
Cooling Tower Fan	30PED30AN002	ESW Cooling Tower, Division 3	Division 3	Yes	On-Off/ On-Off	Start-Stop/ Start-Stop
Cooling Tower Fan	30PED40AN001	ESW Cooling Tower, Division 4	Division 4	Yes	On-Off/ On-Off	Start-Stop/ Start-Stop
Cooling Tower Fan	30PED40AN002	ESW Cooling Tower, Division 4	Division 4	Yes	On-Off/ On-Off	Start-Stop/ Start-Stop

1) Equipment tag numbers are provided for information only and are not part of the certified design.

2) ^{N} denotes the division the component is normally powered from; ^{A} denotes the division the component is powered from when alternate feed is implemented.

3) "Dedicated" components are non-Class 1E components but are powered from the Class 1E Division as shown.

Table 2.7.11-3—Essential Service Water System ITAAC (6 Sheets)

Commitment Wording		Inspections, Tests, Analyses	Acceptance Criteria
2.1	The functional arrangement of the ESWS is as shown on Figure 2.7.11-1.	Inspections of the as-built system as shown on Figure 2.7.11-1 will be conducted	The as-built ESWS conforms to the functional arrangement as shown on Figure 2.7.11-1.
2.2	The location of the ESWS equipment is as listed in Table 2.7.11-1.	An inspection will be performed of the location of the equipment listed in Table 2.7.11-1.	The equipment listed in Table 2.7.11-1 is located as listed in Table 2.7.11-1.
2.3	Physical separation exists between divisions of the ESWS.	An inspection will be performed to verify that the divisions of the ESWS are located in separate ESW and SB buildings.	The divisions of the ESWS system are located in separate ESW and SB buildings as shown on Figure 2.7.11-1.
2.4	Deleted.	Deleted.	Deleted.
2.5	Deleted.	Deleted.	Deleted.
3.1	Deleted.	Deleted.	Deleted.
3.2	Check valves listed in Table 2.7.11-1 will function as listed in Table 2.7.11-1.	Tests will be performed for the operation of the check valves listed in Table 2.7.11-1.	The check valves listed in Table 2.7.11-1 perform the functions listed in Table 2.7.11-1.
3.3	Deleted.	Deleted.	Deleted.
3.4	Components identified as Seismic Category I in Table 2.7.11-1 can withstand seismic design basis loads without a loss of the function listed in Table 2.7.11-1.	a. Type tests, analyses, or a combination of type tests and analyses will be performed on the components identified as Seismic Category I in Table 2.7.11-1 using analytical assumptions, or under conditions, which bound the Seismic Category I design requirements.	a. Seismic qualification reports (SQDP, EQDP, or analyses) exist and conclude that the Seismic Category I components identified in Table 2.7.11-1 can withstand seismic design basis loads without a loss of the function listed in Table 2.7.11-1 including the time required to perform the listed function.

Table 2.7.11-3—Essential Service Water System ITAAC (6 Sheets)

Commitment Wording		Inspections, Tests, Analyses	Acceptance Criteria
		b. Inspections will be performed of the Seismic Category I components identified in Table 2.7.11-1 to verify that the components, including anchorage, are installed as specified on the construction drawings and deviations have been reconciled to the seismic qualification reports (SQDP, EQDP, or analyses).	b. Inspection reports exist and conclude that the Seismic Category I components identified in Table 2.7.11-1, including anchorage, are installed as specified on the construction drawings and deviations have been reconciled to the seismic qualification reports (SQDP, EQDP, or analyses).
3.5	Components listed in Table 2.7.11-1 as ASME Code Section III are designed in accordance with ASME Code Section III requirements.	Inspections of ASME Code Section III Design Reports and associated reference documents will be performed.~~Inspections will be performed for the existence of ASME Code Section III Design Reports.~~	ASME Code Section III Design Reports (NCA-3550) exist and conclude that components listed as ASME Code Section III in Table 2.7.11-1 comply with ASME Code Section III requirements.~~ASME Code Section III Design Reports (NCA-3550) exist for components listed as ASME Code Section III in Table 2.7.11-1.~~
3.6	Components listed in Table 2.7.11-1 as ASME Code Section III are fabricated in accordance with ASME Code Section III requirements.	An analysis will be performed to verify that deviations to the component design reports (NCA-3550) have been reconciled.~~Inspections will be performed to verify that the design report has been revised to reflect as-built deviations from the design if applicable.~~	ASME Code Section III Design Reports (NCA-3550) exist and conclude that components listed as ASME Code Section III in Table 2.7.11-1 comply with ASME Code Section III requirements and any deviations to the design report have been reconciled.~~For components listed as ASME Code Section III in Table 2.7.11-1, the as-built component satisfies design requirements of ASME Code Section III as demonstrated in the Design Report (NCA-3550).~~

Table 2.7.11-3—Essential Service Water System ITAAC (6 Sheets)

Commitment Wording		Inspections, Tests, Analyses	Acceptance Criteria
3.7	Pressure boundary welds on components listed in Table 2.7.11-1 as ASME Code Section III are in accordance with ASME Code Section III requirements.	Inspections of pressure boundary welds will be performed to verify that welding is performed in accordance with ASME Code Section III requirements.	For components listed as ASME Code Section III in Table 2.7.11-1, ASME Code Section III Data Reports (NCA-8000) exist and conclude that pressure boundary welding has been performed in accordance with ASME Code Section III.
3.8	Components listed in Table 2.7.11-1 as ASME Code Section III retain pressure boundary integrity at design pressure.	Hydrostatic tests will be performed on the components.	For components listed as ASME Code Section III in Table 2.7.11-1, ASME Code Section III Data Reports exist and conclude that hydrostatic test results comply with ASME Code Section III requirements.
3.9	Deleted.	Deleted.	Deleted.
3.10	Deleted.	Deleted.	Deleted.
3.11	Deleted.	Deleted.	Deleted.
3.12	ESWS piping shown as ASME Code Section III on Figure 2.7.11-1 is designed in accordance with ASME Code Section III requirements.	Inspections of the ASME Code Section III Design Reports (NCA-3550) and associated reference documents will be performed. **{{DAC}}**	ASME Code Section III Design Reports (NCA-3550) exist and conclude that ESWS piping shown as ASME Code Section III on Figure 2.7.11-1 complies with ASME Code Section III requirements. **{{DAC}}**
3.13	ESWS piping shown as ASME Code Section III on Figure 2.7.11-1 is installed in accordance with an ASME Code Section III Design Report.	Analyses to reconcile as-built deviations to the ASME Code Design Reports (NCA-3550) will be performed. ~~Piping analyzed using time-history methods will be reconciled to the as-built information.~~	For ESWS piping shown as ASME Code Section III on Figure 2.7.11-1, ASME Code Data Reports (N-5) exist and conclude that design reconciliation (NCA-3554) has been completed in accordance with the ASME Code Section III for the as-built system. The report(s) document the as-built condition.

Table 2.7.11-3—Essential Service Water System ITAAC (6 Sheets)

Commitment Wording		Inspections, Tests, Analyses	Acceptance Criteria
3.14	Pressure boundary welds in ESWS piping shown as ASME Code Section III on Figure 2.7.11-1 are in accordance with ASME Code Section III.	Inspections of pressure boundary welds verify that welding is performed in accordance with ASME Code Section III requirements.	ASME Code Section III Data Reports exist and conclude that pressure boundary welding for ESWS piping shown as ASME Code Section III on Figure 2.7.11-1 has been performed in accordance with ASME Code Section III.
3.15	ESWS piping shown as ASME Code Section III on Figure 2.7.11-1 retains pressure boundary integrity at design pressure.	Hydrostatic tests will be performed on the as-built system.	For ESWS piping shown as ASME Code Section III on Figure 2.7.11-1, ASME Code Section III Data Reports exist and conclude that hydrostatic test results comply with ASME Code Section III requirements.
3.16	~~ESWS piping shown as ASME Code Section III on Figure 2.7.11-1 is installed and inspected in accordance with ASME Code Section III requirements.~~Deleted.	~~An inspection of the as-built piping will be performed.~~Deleted.	~~For ESWS piping shown as ASME Code Section III on Figure 2.7.11-1, N-5 Data Reports exist and conclude that installation and inspection are in accordance with ASME Code Section III requirements~~Deleted.
3.17	Components listed in Table 2.7.11-1 as ASME Code Section III are installed in accordance with ASME Code Section III requirements.	An inspection of ASME Code Data Reports will be performed.	ASME Code Section III N-5 Data Reports exist and conclude that components listed as ASME Code Section III in Table 2.7.11-1 have been installed in accordance with ASME Code Section III requirements.

Table 2.7.11-3—Essential Service Water System ITAAC (6 Sheets)

Commitment Wording		Inspections, Tests, Analyses	Acceptance Criteria
3.18	The UHS fans are capable of withstanding the effects of tornado including differential pressure effects, overspeed, and the impact of differential pressure effects on other equipment located within the cooling tower structure (e.g., capability to function, potential to become missile/debris hazard).	a. Analyses will be performed to demonstrate that the UHS fans are capable of withstanding the effects of tornado including differential pressure effects, overspeed, and the impact of differential pressure effects on other equipment located within the cooling tower structure (e.g., capability to function, potential to become missile/debris hazard).	a. A report exists and concludes that the UHS fans are capable of withstanding the effects of tornado including differential pressure effects, overspeed, and the impact of differential pressure effects on other equipment located within the cooling tower structure (e.g., capability to function, potential to become missile/debris hazard)..
		b. Inspections will be performed of the UHS fans and other equipment located within the structure to verify that the components are installed as specified on the construction drawings, and deviations have been reconciled to the tornado analysis report.	b. Inspection reports exist and conclude that the UHS fans and other equipment located within the cooling tower structure are installed as specified on the construction drawings, and deviations have been reconciled to the tornado analysis report.
4.1	Displays exist or can be retrieved in the MCR and the RSS as identified in Table 2.7.11-2.	Tests will be performed for the retrievability of the displays in the MCR or the RSS as listed in Table 2.7.11-2.	a. The displays listed in Table 2.7.11-2 as being retrieved in the MCR can be retrieved in the MCR. b. The displays listed in Table 2.7.11-2 as being retrieved in the RSS can be retrieved in the RSS.
4.2	Controls exist in the MCR and the RSS as identified in Table 2.7.11-2.	Tests will be performed for the existence of control signals from the MCR and the RSS to the equipment listed in Table 2.7.11-2.	a. The controls listed in Table 2.7.11-2 as being in the MCR exist in the MCR. b. The controls listed in Table 2.7.11-2 as being in the RSS exist in the RSS.

Table 2.7.11-3—Essential Service Water System ITAAC (6 Sheets)

Commitment Wording		Inspections, Tests, Analyses	Acceptance Criteria
4.3	Equipment listed as being controlled by a PACS module in Table 2.7.11-2 responds to the state requested by a test signal.	A test will be performed using test signals.	Equipment listed as being controlled by a PACS module in Table 2.7.11-2 responds to the state requested by the test signal.
4.4	If one ESWS pump (30PEB10/20/30/40 AP001) fails during normal operation, a switchover to the other ESWS train is carried out automatically for the entire cooling train and is initiated by the CCWS Switchover sequence.	Tests will be performed using test signals to verify the interlock.	The following interlock responds as specified below when activated by a test signal: If one ESWS pump (30PEB10/20/30/40 AP001) fails during normal operation, a switchover to the other ESWS train is carried out automatically for the entire cooling train and is initiated by the CCWS Switchover sequence.
4.5	A spurious closure of the ESWS pump discharge valve (30PEB10/20/30/40 AA005) results in a switchover to the other ESWS train automatically for the entire cooling train and is initiated by the CCWS switchover sequence.	Tests will be performed using test signals to verify the interlock.	The following interlock responds as specified below when activated by a test signal: A spurious closure of the ESWS pump discharge valve (30PEB10/20/30/40 AA005) results in a switchover to the other ESWS train automatically for the entire cooling train and is initiated by the CCWS Switchover sequence.
4.6	Deleted.	Deleted.	Deleted.
4.7	Deleted.	Deleted.	Deleted.
5.1	The components designated as Class 1E in Table 2.7.11-2 are powered from the Class 1E division as listed in Table 2.7.11-2 in a normal or alternate feed condition.	a. Testing will be performed for components designated as Class 1E in Table 2.7.11-2 by providing a test signal in each normally aligned division.	a. The test signal provided in the normally aligned division is present at the respective Class 1E component identified in Table 2.7.11-2.

Table 2.7.11-3—Essential Service Water System ITAAC (6 Sheets)

Commitment Wording		Inspections, Tests, Analyses	Acceptance Criteria
		b. Testing will be performed for components designated as Class 1E in Table 2.7.11-2 by providing a test signal in each division with the alternate feed aligned to the divisional pair.	b. The test signal provided in each division with the alternate feed aligned to the divisional pair is present at the respective Class 1E component identified in Table 2.7.11-2.
5.2	Valves listed in Table 2.7.11-2 fail as-is on loss of power.	Testing will be performed for the valves listed in Table 2.7.11-2 to fail as-is on loss of power.	Following loss of power, the valves listed in Table 2.7.11-2 fail as-is.
5.3	Deleted.	Deleted.	Deleted.
5.4	Items identified in Table 2.7.11-2 as "Dedicated" ESWS motor-operated components (including Division 4 cooling tower fans) are capable of being supplied by a SBODG.	Testing will be performed for motor-operated components designated as "Dedicated" in Table 2.7.11-2 (including Division 4 cooling tower fans) by ~~providing a test signal with the~~supplying electrical power from an SBODG.	"Dedicated" components identified in Table 2.7.11-2 (including Division 4 cooling tower fans) are capable of being supplied by an SBODG.~~The test signal provided by the SBODG is present at the respective "Dedicated" component identified in Table 2.7.11-2~~.
6.1	Deleted.	Deleted.	Deleted.
7.1	The ESWS UHS as listed in Table 2.7.11-1 has the capacity to remove the ~~design~~ total Max ~~h~~Heat ~~l~~Load from the CCWS and EDG heat exchangers, ~~and~~ the ESWPBVS room cooler, and the ESW pump mechanical work.~~The ESW UHS as listed in Table 2.7.11-1 has the capacity to remove the design heat load from the CCWS.~~	~~T~~Initial tests of the UHS and inspection of a heat exchanger/cooler data report ~~Tests and analyses~~ will be performed to demonstrate the capability of the ESWS UHS as listed in Table 2.7.11-1 to remove the ~~design~~ total Max ~~h~~Heat ~~l~~Load from CCWS and EDG heat exchangers, ~~and~~ the ESWPBVS room cooler, and the ESW pump mechanical work.	A report exists and concludes that ~~The~~ the ESWS UHS has the capacity to remove ~~at least~~ the total Max~~design~~ ~~h~~Heat ~~l~~Load ~~of 3.139+08 BTU/hr~~ from the CCWS and EDG heat exchangers, ~~and~~ the ESWPBVS room cooler, and the ESW pump mechanical work.~~of 2.913 E+08 BTU/hr.~~

Table 2.7.11-3—Essential Service Water System ITAAC (6 Sheets)

Commitment Wording		Inspections, Tests, Analyses	Acceptance Criteria
7.2	The pumps listed in Table 2.7.11-1 have sufficient NPSHA ~~that is greater than NPSHR at system run-out flow~~.	Testing and analyses will be performed to verify NPSHA for pumps listed in Table 2.7.11-1.	A report exists and concludes that ~~The~~ the pumps listed in Table 2.7.11-1 have NPSHA that is greater than NPSHR at the maximum ESWS flow rate ~~system run-out flow~~ with consideration for minimum allowable cooling tower basin water level (as corrected to account for vortex effects and actual temperature and atmospheric conditions).
7.3	Class 1E valves listed in Table 2.7.11-2 perform the function listed in Table 2.7.11-1 under system operating conditions.	Tests and analyses or a combination of tests and analyses will be performed to demonstrate the ability of the valves listed in Table 2.7.11-2 to change position as listed in Table 2.7.11-1 under system operating conditions.	The valve changes position as listed Table 2.7.11-1 under system operating conditions.
7.4	The ESWS has provisions to allow flow testing of the ESWS pumps during plant operation.	Testing for flow of the ESWS pumps back to the ESW cooling tower basin will be performed.	The closed loop allows ESWS pump flow back to the ESW cooling tower basin.
7.5	Deleted.	Deleted.	Deleted.
7.6	The ESWS delivers water to the CCWS and EDG heat exchangers and the ESWPBVS room cooler~~s~~.	a. Tests and inspection of a pump data report ~~analyses~~ will be performed to verify the ESWS delivery rate to the CCWS and EDG heat exchangers and the ESWPBVS room cooler~~under operating conditions~~.	a. A report exists and concludes that the ESWS ~~system~~ delivers water at ≥ the Normal Flow Rate for the ESW pump ~~a the combined total flowrate of at least 19,340 gpm~~ to the CCWS and EDG heat exchangers and the ESWPBVS room cooler.

Table 2.7.11-3—Essential Service Water System ITAAC (6 Sheets)

Commitment Wording		Inspections, Tests, Analyses	Acceptance Criteria
		b. An integrated system test will be performed to verify the startup time of the ESWS.	b. The ESWS starts and delivers water to the CCWS and EDG heat exchangers at ≥ the Total Required ESW Flow for the heat exchangers within 120 seconds. A report exists and concludes that the ESWS delivers water to the ESWPBVS room cooler at ≥ the Total Required ESW Flow for the room cooler within 120 seconds.
7.7	The ESWS debris filters listed in Table 2.7.11-1 function to backwash upon high differential pressure.	Tests will be performed to verify the ESWS debris filters function to backwash on high differential pressure under system operating conditions.	The filters initiate backwash flow to filter blowdown.
7.8	The inlet between the cooling tower basin and pump intake structure has a coarse and a fine debris screen for each ESW pump.	a. An inspection will be performed for the existence of a coarse and a fine debris screen at the inlet between the cooling tower basin and pump intake structure for each ESW pump. b. An inspection will be performed to verify the maximum mesh grid opening of the debris screens.	a. A coarse and a fine debris screen exists at the inlet between the cooling tower basin and pump intake structure for each ESW pump. b. The coarse debris screen mesh is a maximum grid opening of 2.x 2 inches. The fine debris screen mesh is a maximum grid opening of 0.5 x 0.5 inches.

Table 2.7.11-3—Essential Service Water System ITAAC (6 Sheets)

Commitment Wording		Inspections, Tests, Analyses	Acceptance Criteria
7.9	The UHS cooling towers are capable of removing the design basis heat load without exceeding the maximum specified temperature limit for ESWS.	Tests and analyses, or a combination of tests and analyses, will be performed to demonstrate that the UHS cooling towers, for a minimum of 30 days following a design basis accident, are capable of removing the design basis heat load, assuming the most limiting design conditions of heat removal (including the effects of concentrating impurities on the ESWS), without exceeding the maximum specified temperature limit for ESWS.	A report (Cooling Tower Design Report) exists and concludes that the UHS cooling towers are capable of removing the design basis heat load for a minimum of 30 days following a design basis accident, assuming the most-limited design conditions (including the effects of concentrating impurities on the ESWS), without exceeding the maximum specified temperature limit for ESWS.
7.10	The UHS cooling towers are capable of removing the design basis heat load without water level dropping below the minimum required level in the cooling tower.	Tests and analyses, or a combination of tests and analyses, will be performed to demonstrate that the UHS cooling towers, for a minimum of 30 days following a design basis accident, are capable of removing the design basis heat load, assuming the most limiting design conditions for water usage (including the effects of concentrating impurities on the ESWS), without water level dropping below the minimum required level in the cooling tower basin.	A report (Cooling Tower Design Report) exists and concludes that the UHS cooling towers are capable of removing the design basis heat load for a minimum of 30 days, assuming the most-limited design conditions (including the effects of concentrating impurities on the ESWS), following a design basis accident without water level dropping below the minimum required level in the cooling tower.
7.11	The cooling tower basin is sized for the minimum basin water volume.	An inspection and analysis will be performed to demonstrate the size of the cooling tower basin is capable of holding the minimum basin water volume.	A report exists and concludes that the cooling tower basin size is capable to hold the minimum basin water volume.

Next File

Figure 2.7.11-1—Essential Service Water System Functional Arrangement
Sheet 1 of 9

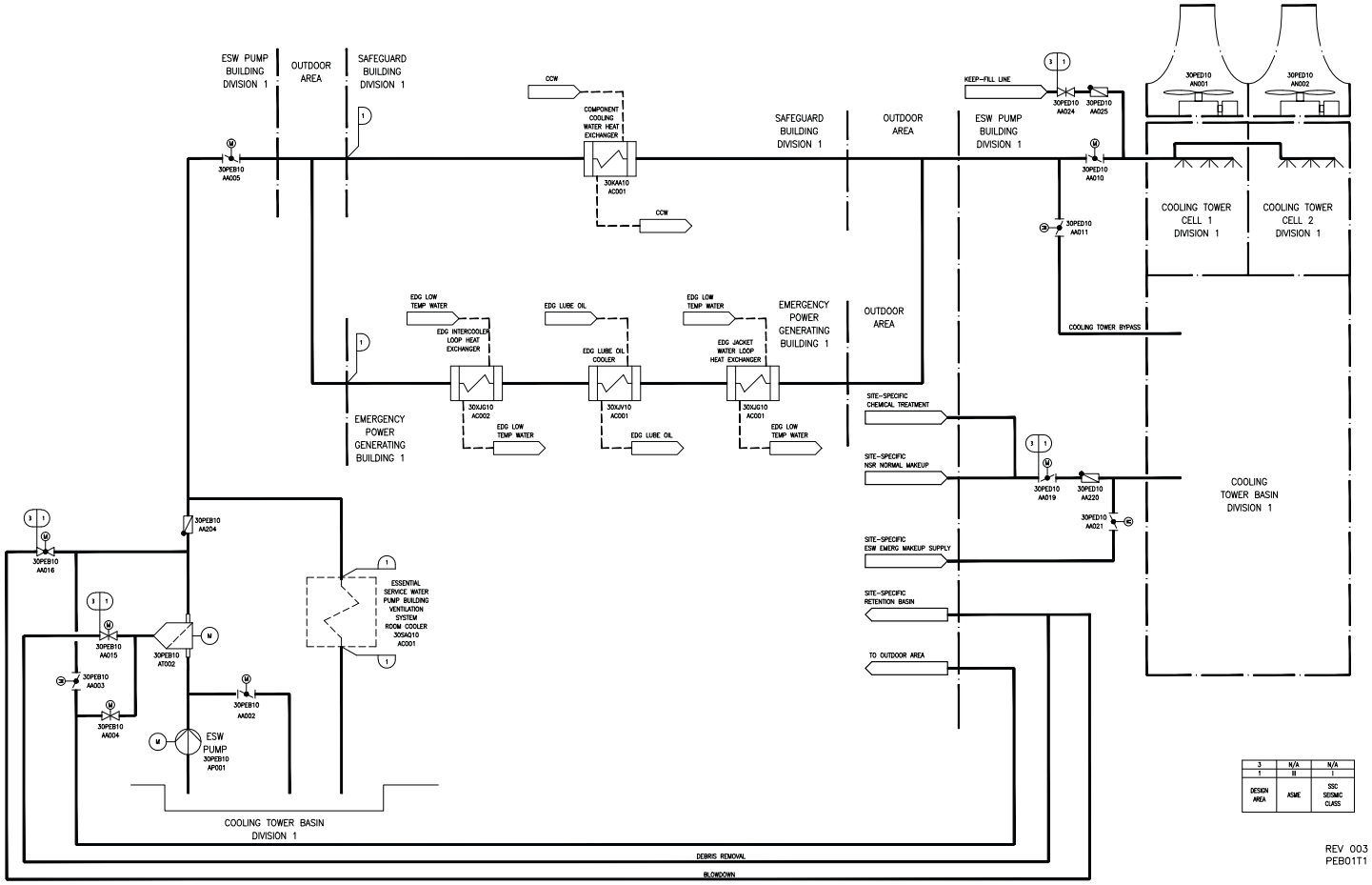

Figure 2.7.11-1—Essential Service Water System Functional Arrangement
Sheet 2 of 9

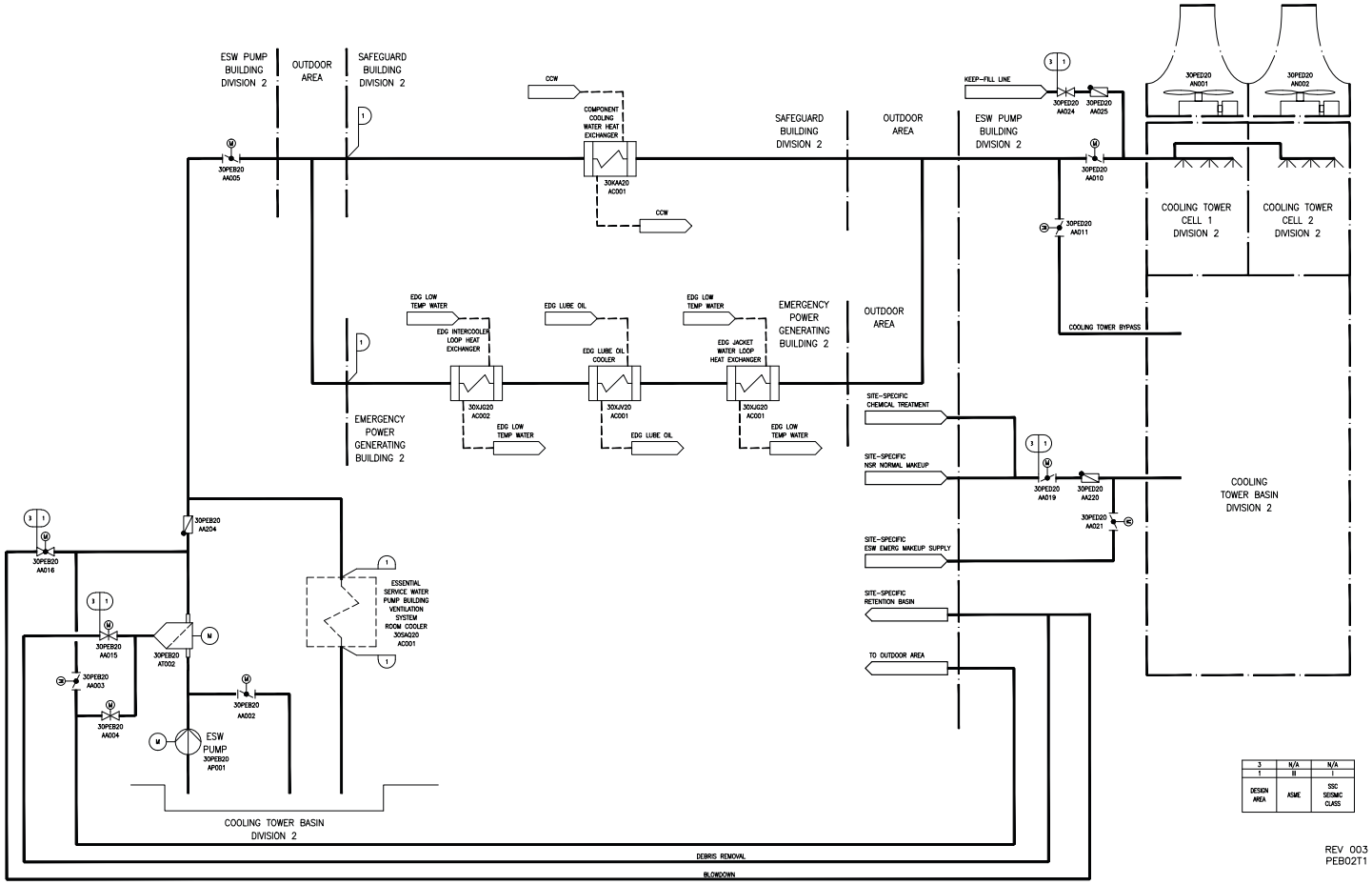

Figure 2.7.11-1—Essential Service Water System Functional Arrangement
Sheet 3 of 9

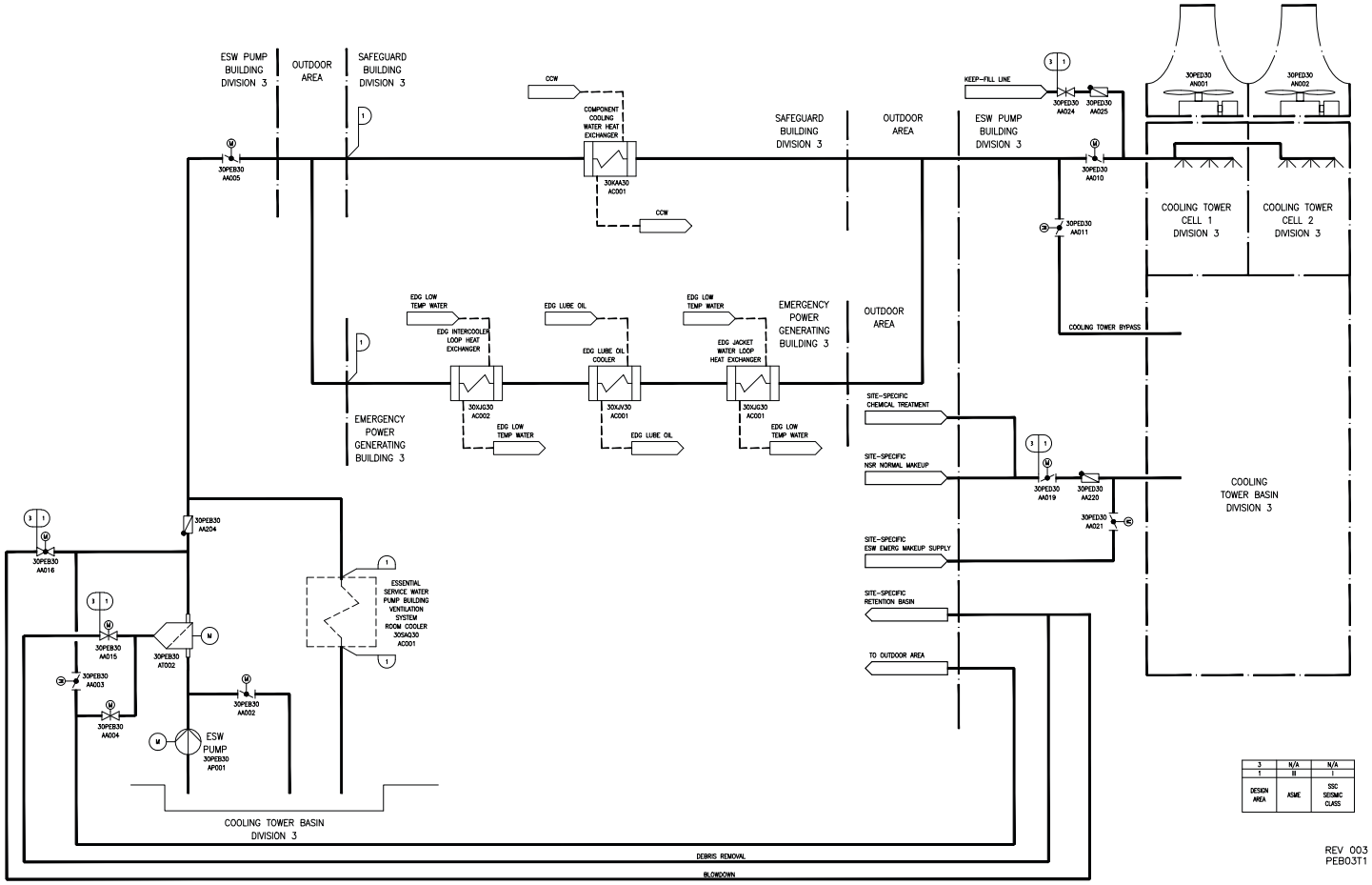

Figure 2.7.11-1—Essential Service Water System Functional Arrangement
Sheet 4 of 9

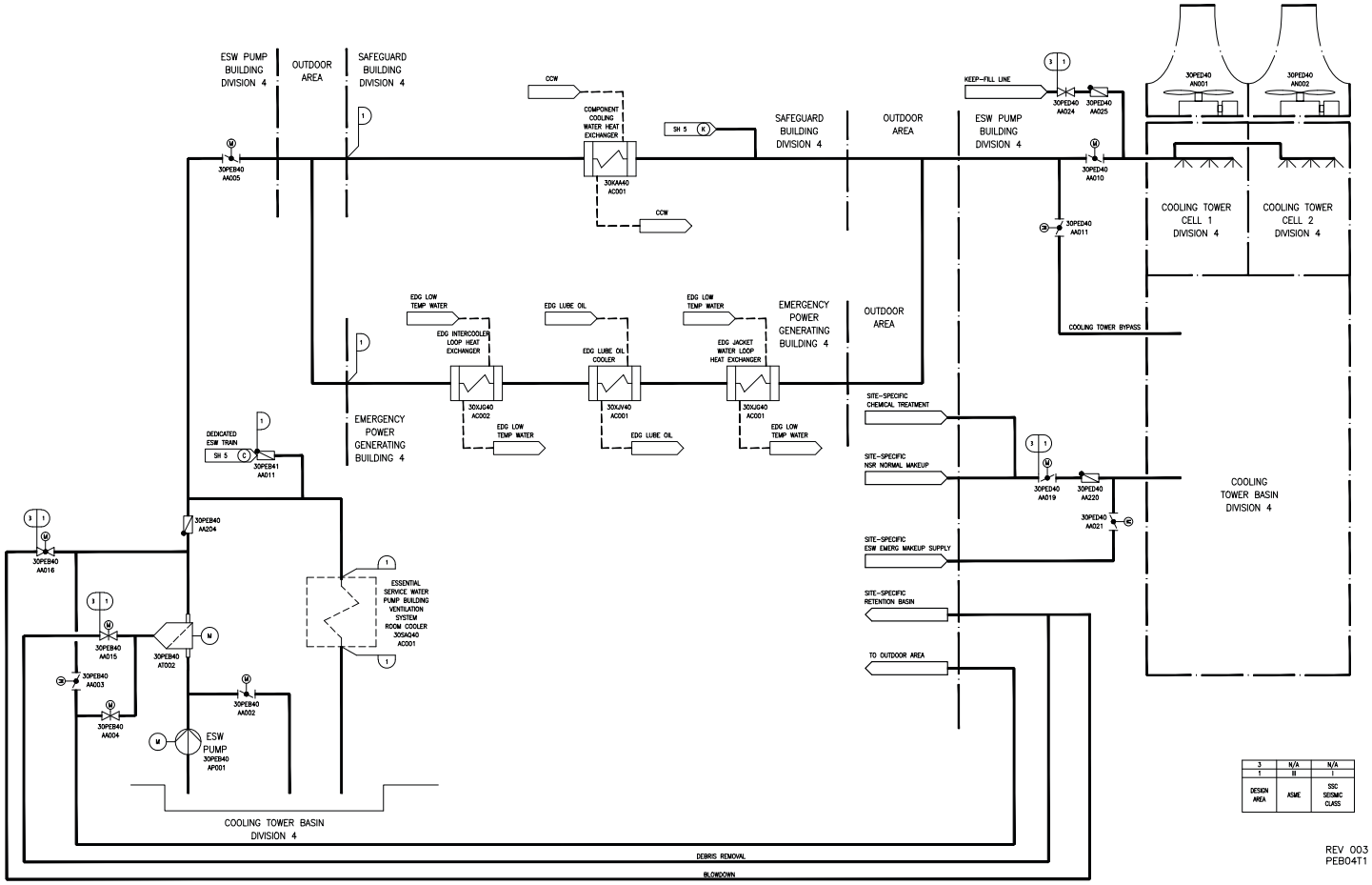

Figure 2.7.11-1—Essential Service Water System Functional Arrangement
Sheet 5 of 9

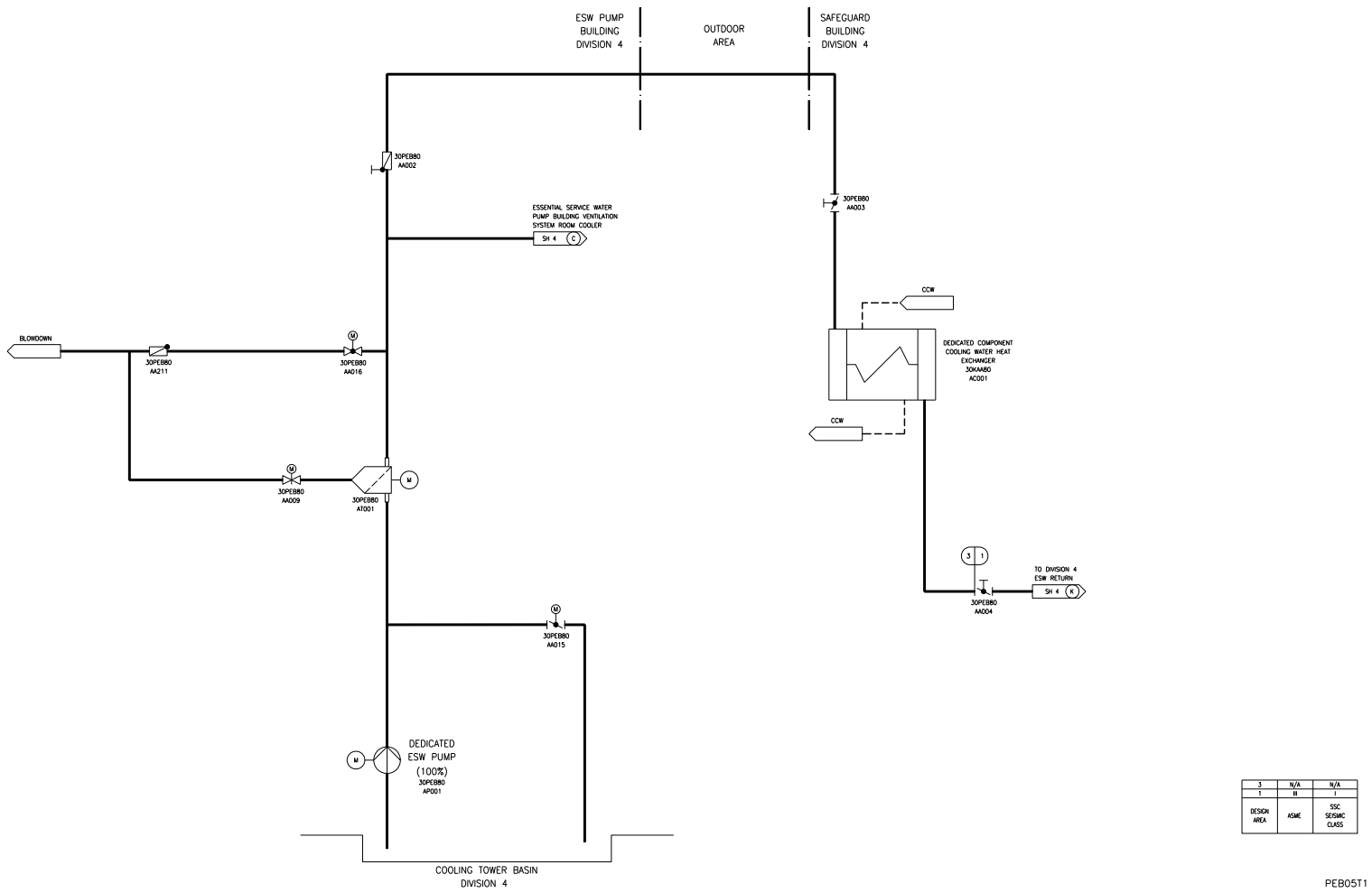

Figure 2.7.11-1—Essential Service Water System Functional Arrangement
Sheet 6 of 9

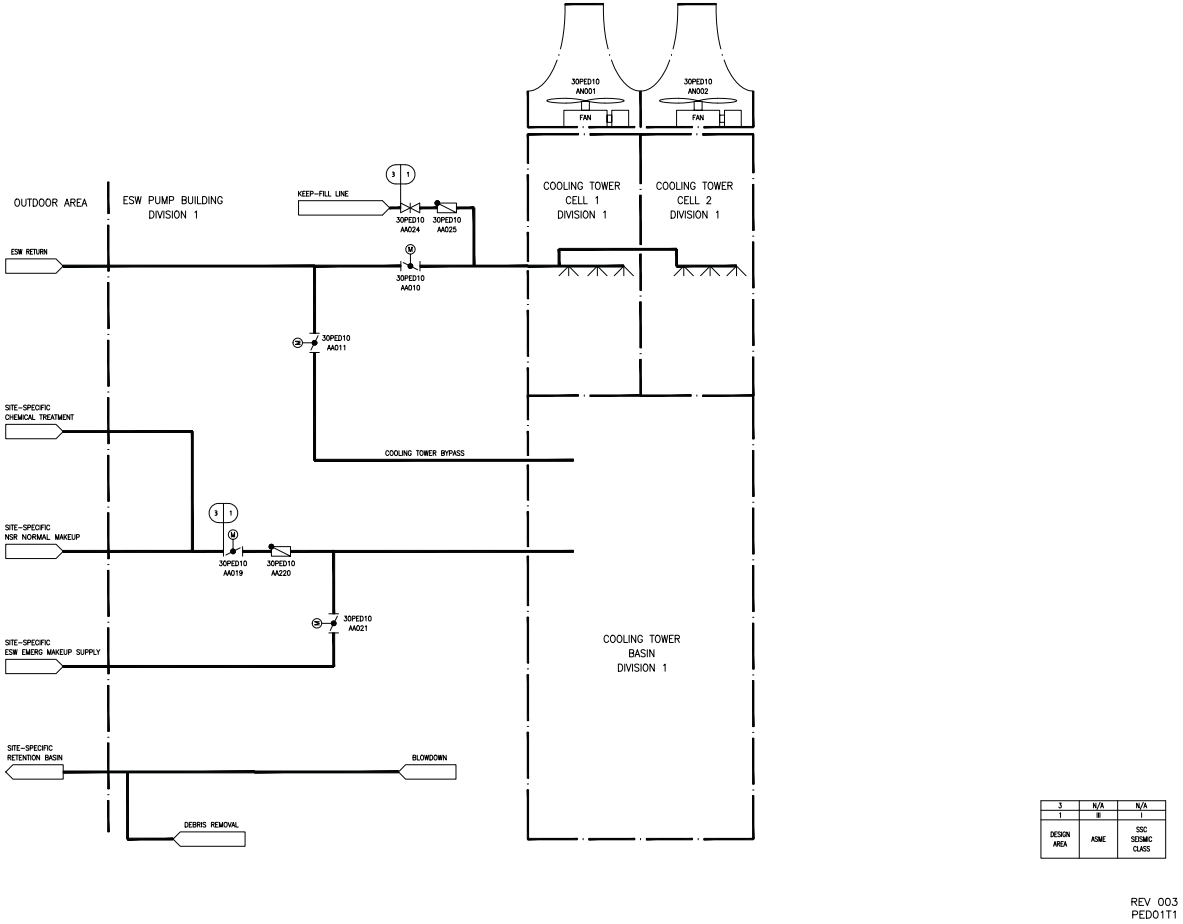

Figure 2.7.11-1—Essential Service Water System Functional Arrangement
Sheet 7 of 9

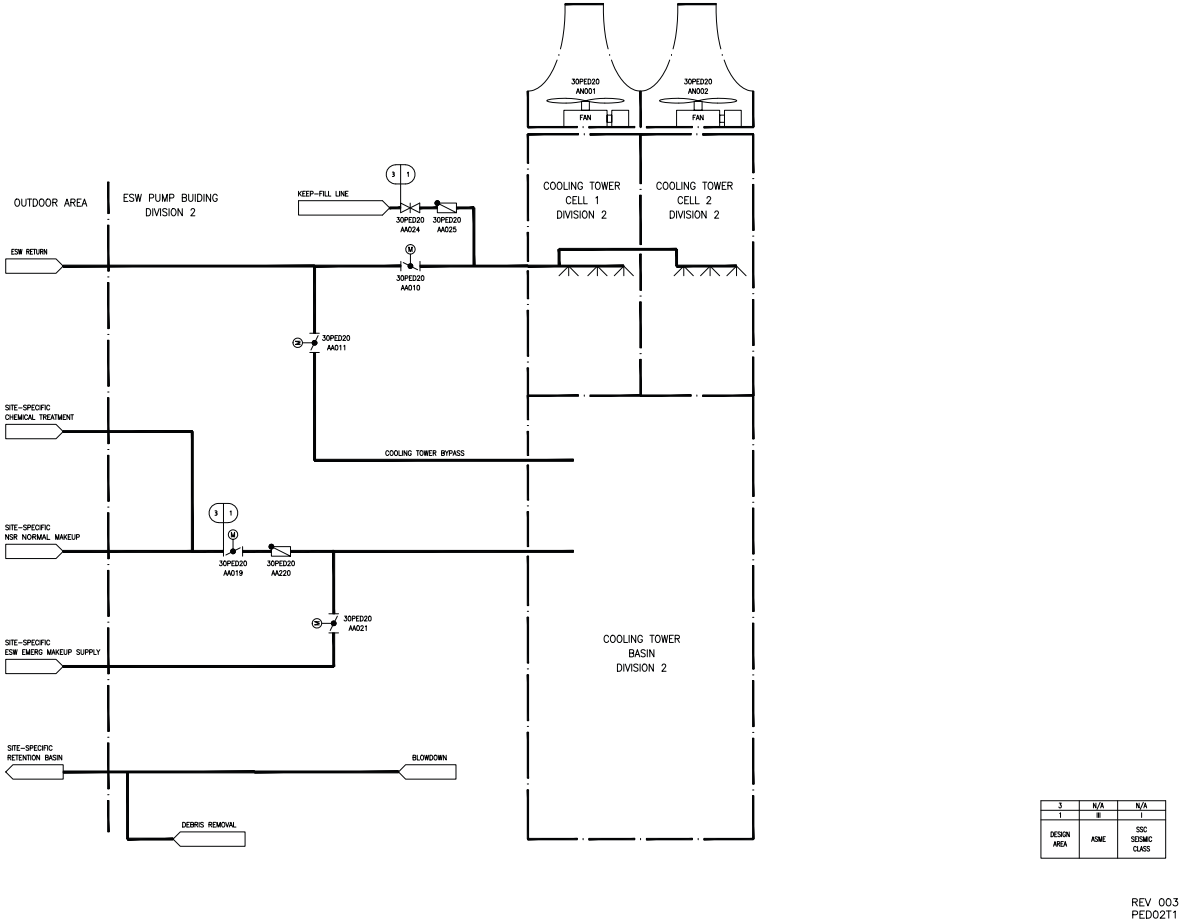

Figure 2.7.11-1—Essential Service Water System Functional Arrangement
Sheet 8 of 9

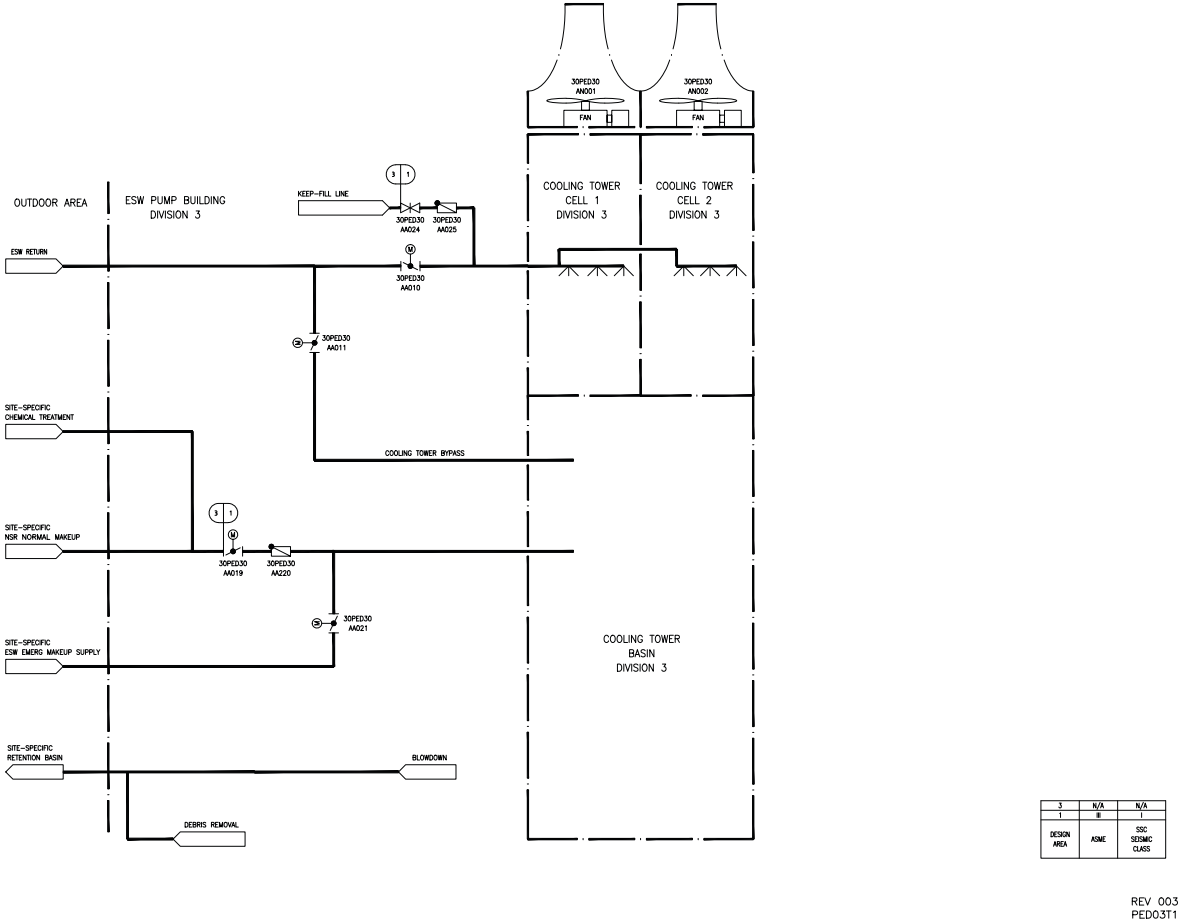

Figure 2.7.11-1—Essential Service Water System Functional Arrangement
Sheet 9 of 9

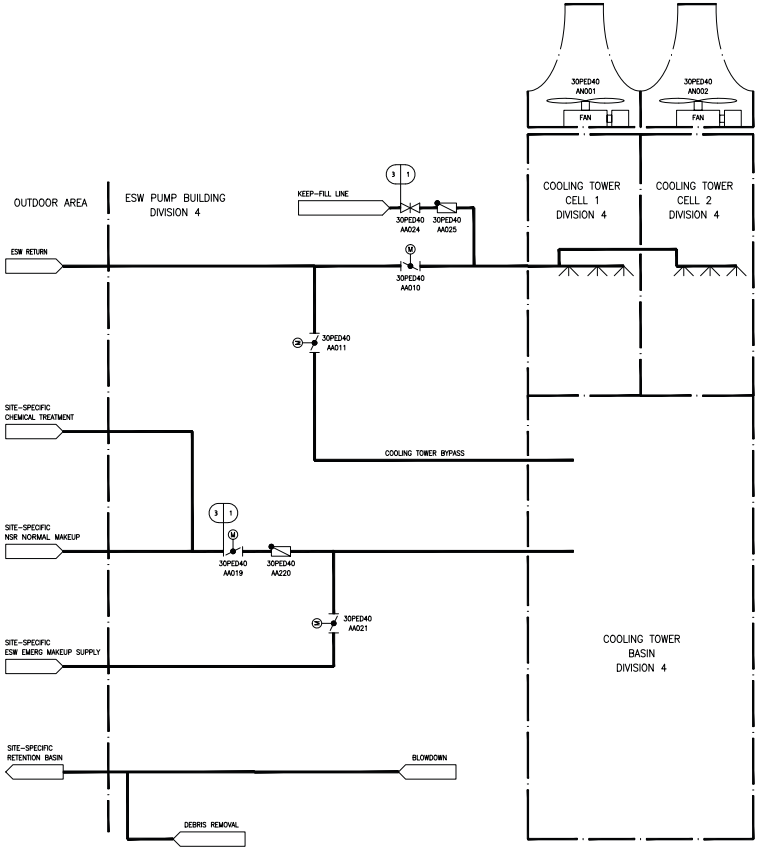

3	N/A	N/A
1	III	I
DESIGN AREA	ASME	SSC SEISMIC CLASS

REV 003
PED04T1

Next File

4.6 Buried Conduit and Duct Banks, and Pipe and Pipe Ducts

Design Description

Site specific systems that are not within the scope of the certified design will be designed for any facility which has adopted the U.S. EPR certified design. The site specific systems will meet the interface requirements defined below.

Interface Requirements

Certain design bases of the U. S. EPR are to be met by the COL applicant in the design of the site specific systems.

The design of buried conduit and duct banks, and buried pipe and pipe ducts is site-specific. Buried Seismic Category I conduit, electrical duct banks, pipe, and pipe ducts will be analyzed and designed in accordance with the specific requirements of the systems.

Buried conduit and duct banks, and pipe and pipe ducts will be designed to withstand the effects of soil overburden, surcharge, groundwater, flood, freezing, seismic soil interaction, and the other effects of burial, as well as natural phenomena such as earthquakes, tornados, hurricanes, and external missiles without loss of capability to perform their safety related functions. In addition, buried conduit and duct banks, and pipe and pipe ducts will be designed and installed to maintain divisional separation. Concrete components of buried items will be designed in accordance with ACI 349-2001, including the exceptions specified in RG 1.142. Steel components of buried items will be designed in accordance with ANSI/AISC N690-1994 (R2004), including Supplement 2.

4.7 Essential Service Water System and Ultimate Heat Sink

Interface requirements for the essential service water system (ESWS) and ultimate heat sink (UHS), including the emergency makeup water system, are provided in Section 2.7.11 ~~for the emergency makeup water system~~ and Section 4.6 for buried conduit and duct banks, and pipe and pipe ducts.

Table 1.8-1—Summary of U.S. EPR Plant Interfaces with Remainder of Plant
Sheet 1 of 2

Item No.	Interface	Interface Type	Section
1-1	Switchgear Building	U.S. EPR Interface	1.2, 8.3, 8.4
1-2	Access Building	U.S. EPR Interface	1.2, 3.7.2
1-3	Turbine Building	U.S. EPR Interface	1.2, 3.7.2
1-4	Fire Protection Storage Tanks and Building	U.S. EPR Interface	1.2, 3.7.2
2-1	Envelope of U.S. EPR site related design	Site Parameter	2.0, Table 2.1-1
2-2	Consequences of potential hazards from nearby industrial, transportation and military facilities	Site Parameter	2.2
2-3	Site-specific χ/Q values based on site-specific meteorological data at the exclusion area boundary (EAB), low population zone (LPZ), and control room	Site Parameter	2.3
2-4	Site-specific seismic characteristics	Site Parameter	2.5, 3.7
2-5	Soil conditions and profiles	Site Parameter	2.5, 3.7
2-6	Bearing pressure of soil beneath the nuclear island basemat	Site Parameter	2.5
2-7	Foundation settlements	Site Parameter	2.5
3-1	Missiles generated from nearby facilities	Site Parameter	3.5
3-2	Missiles generated by tornadoes or extreme winds	Site Parameter	3.5
3-3	Aircraft hazards	Site Parameter	3.5
3-4	Site-specific loads that lie within the standard plant design envelope for Seismic Category I structures	Site Parameter	3.8
3-5	Buried conduit and duct banks, and pipe and pipe ducts	U.S. EPR Interface	3.8
8-1	Off-site ac power transmission system connections to the switchyard and the connection to the plant power distribution system	U.S. EPR Interface	8.2
8-2	On-site ac power transmission system connections to the switchyard and the connection to the plant power distribution system	U.S. EPR Interface	8.3
8-3	Auxiliary power and generator transformer areas	U.S. EPR Interface	8.2
8-4	Lightning protection and grounding system grid	U.S. EPR Interface	8.3.1
8-5	Design details for electrical distribution for circulating water system components outside the Turbine Building.	U.S. EPR Interface	8.3

Table 1.8-1—Summary of U.S. EPR Plant Interfaces with Remainder of Plant
Sheet 2 of 2

Item No.	Interface	Interface Type	Section
9-2	Provide support systems such as makeup water, blowdown and chemical treatment (to control biofouling) for the UHS	U.S. EPR Interface	9.2.5
9-3	Raw water system	U.S. EPR Interface	9.2.9
9-4	Fire water distribution system	U.S. EPR Interface	9.5.1
10-1	Design details for circulating water system including makeup water, and water treatment	U.S. EPR Interface	10.4.5
11-1	Process Control program and program aspects of process and effluent monitoring and sampling	U.S. EPR Interface	11.5
13-1	Site-specific information for administrative, operating, emergency, maintenance, and other operating procedures.	U.S. EPR Interface	13.5
13-2	Site-specific emergency plan	U.S. EPR Interface	13.3
13-3	Site-specific security assessment and Physical Security Plan	U.S. EPR Interface	13.6
14-1	Site-specific information for development of the initial test program	U.S. EPR Interface	14.0

Table 2.1-1—U.S. EPR Site Design Envelope
Sheet 1 of 7

U.S. EPR Site Design Envelope	
Precipitation (Refer to Sections 2.3 and 2.4~~Section 2.4~~)	
Rainfall rate	≤19.4 in/hr
Sum of normal winter precipitation event and extreme frozen winter precipitation event ground load.~~Normal winter precipitation event ground load~~	≤143 psf(1)~~≤100 psf~~
~~Normal winter precipitation event roof load~~	~~≤70 psf~~
~~Extreme liquid winter precipitation event roof load~~	~~0 psf 1~~
~~Extreme frozen winter precipitation event ground load~~	~~≤43 psf (based on 55 inches)~~
~~Extreme frozen winter precipitation roof ground load~~	~~≤30 psf~~
~~Extreme winter precipitation roof load~~	~~≤100 psf (100-year MRI)~~
Seismology (Refer to Sections 2.5 & 3.7)	
Horizontal SSE Acceleration	0.3g PGA~~Peak~~ for EUR and 0.21g PGA for HF (CSDRS shapes – See Section 3.7)
Vertical SSE Acceleration	0.3g PGA~~Peak~~ for EUR and 0.18g PGA for HF (CSDRS shapes – See Section 3.7)
Fault Displacement Potential	No fault displacement is considered for safety-related SSC in U.S. EPR design certification.

Table 2.1-1—U.S. EPR Site Design Envelope
Sheet 2 of 7

U.S. EPR Site Design Envelope	
Soil (Refer to Section 2.5)	
Minimum Static Bearing Capacity	Maximum static bearing demand is 22,000 lbs/ft^2 ~~ksf~~ in localized areas at the bottom of the Nuclear Island, EPGB, and ESWB basemats and ~~15 ksf~~ 15,000 lbs/ft^2 ~~on~~is the average ~~across the total area of the bottom of~~for the Nuclear Island, EPGB, and ESWB basemats. The ultimate static bearing capacity divided by 3.0 is greater than or equal to the maximum static bearing demand. ● ~~3,800 lbs/ft^2 in localized areas at the bottom of the EPGB basemat and 2,700 lbs/ft^2 on average across total area at the bottom of the EPGB basemat.~~ ● ~~17,800 lbs/ft^2 in localized areas at the bottom of the ESWB basemat and 5,500 lbs/ft^2 on average across total area at the bottom of the ESWB basemat.~~
Minimum Dynamic Bearing Capacity	Maximum dynamic bearing demand is 35,000 lbs/ft^2~~26,000 psf~~ at the ~~bottom~~toe of the Nuclear Island, EPGB, and ESWB basemats. The ultimate dynamic bearing capacity divided by 2.0 is greater than or equal to the maximum dynamic bearing demand. ● ~~10,800 lbs/ft^2 at the bottom of the EPGB basemat.~~ ● ~~28,200 lbs/ft^2 at the bottom of the ESWB basemat.~~
Minimum Shear Wave Velocity (Low strain best estimate average value at bottom of basemat)	1000 fps
Liquefaction	None

Table 2.1-1—U.S. EPR Site Design Envelope
Sheet 3 of 7

U.S. EPR Site Design Envelope	
Maximum ~~Differential~~ Settlement (across the basemat) Tilt Settlement	1/2 inch in 50 feet in any direction
Slope Failure Potential	No slope failure potential is considered in the design of safety-related SSC for U.S. EPR design certification.
Angle of Internal Friction (in situ and backfill)	26.6 degrees (minimum)
Soil Density (γ)	110 lb/ft^3 ≤ γ ≤ 134 lb/ft^3
Maximum Ground Water	3.3 ft below grade
Minimum Coefficient of Static Friction (representative of soil basemat interface)	0.~~7~~5
Inventory of Radionuclides Which Could Potentially Seep Into the Groundwater	
See Table 2.1-2—Bounding Values for Component Radionuclide Inventory	
Flood Level (Refer to Section 2.4)	
Maximum Flood (or Tsunami)	1 ft below grade
Wind (Refer to Section 3.3)	
Maximum Speed (Other than Tornado)	145 mph (Based on 3-second gust at 33 ft above ground level and factored for 50-yr mean recurrence interval)
Importance Factor	1.15 (Safety-related structures for 100-year mean recurrence interval.)

Table 2.1-1—U.S. EPR Site Design Envelope
Sheet 4 of 7

U.S. EPR Site Design Envelope	
Tornado (Refer to Sections 3.3 and 3.5)	
Maximum Pressure and Rate of Drop	1.2 psi at 0.5 psi/s
Maximum Rotational Speed	184 mph
Maximum Translational Speed	46 mph
Maximum Wind Speed	230 mph
Radius of Maximum Rotational Speed	150 ft
Missile Spectra	6 in Schedule 40 pipe, 6.625 in diameter x 15 ft long, 287 lb, 34.5 in^2 impact area, impact velocity of 135 fps horizontal and 90 fps vertical.
	Automobile, 16.4 ft x 6.6 ft x 4.3 ft, 4000 lb, 4086.7 in^2 impact area, impact velocity of 135 fps horizontal and 90 fps vertical. (Automobile missile is considered at elevations up to 30.0 ft above grade elevation.)
	Solid steel sphere, 1 in diameter, 0.147 lb, 0.79 in^2 impact area, impact velocity of 26 fps horizontal and 17 fps vertical.

Table 2.1-1—U.S. EPR Site Design Envelope
Sheet 5 of 7

U.S. EPR Site Design Envelope			
Temperature (Refer to Section 2.3)			
Air	0% Exceedance Values[3]	Maximum	115°F Dry Bulb / 80°F Wet Bulb (mean coincident) ~~81°F Wet Bulb (non-coincident) UHS Design Only~~ ~~(2)~~
		Minimum	-40°F
	1% Exceedance Values (seasonal basis)[4]	Maximum	100°F dry bulb/77°F mean coincident wet bulb 80°F wet bulb (noncoincident)
		Minimum	-10°F
Atmospheric Dispersion and Deposition Factors (χ/Q) (D/Q) (Refer to Section 2.3)			
Maximum Annual Average (limiting sector)			≤4.973E-06 s/m^3 (χ/Q) ≤5.0E-08 m^{-2} (D/Q)
Accident			
0-2 hr (EAB)			≤1E-03 s/m^3
0-2 hr (LPZ)			≤1.75E-04 s/m^3
2-8 hr (LPZ)			≤1.35E-04 s/m^3
8-24 hr (LPZ)			≤1.00E-04 s/m^3
1-4 day (LPZ)			≤5.40E-05 s/m^3
4-30 day (LPZ)			≤2.20E-05 s/m^3

Table 2.1-1—U.S. EPR Site Design Envelope
Sheet 6 of 7

U.S. EPR Site Design Envelope									
Main Control Room/Technical Support Center Intake Atmospheric Dispersion Factors for Onsite Accident Dose Analysis (χ/Q)									
Time Period	Vent Stack Base	Releases via Safe-guard Building Canopy ~~#1~~	~~Releases via Safe-guard Building Canopy #2~~	Equip-ment Hatch Releases via Mate-rial Lock	Depres-surization Shaft Releases	~~Main Steam Relief Train Silencer #1~~	~~Main Steam Relief Train Silencer #2~~	Main Steam Relief Train Silencer #3	~~Main Steam Relief Train Silencer #4~~
0–2 hours (s/m^3)	1.93E-03	6.52E-03	~~1.66E-03~~	(See Note 6)~~1.01E-03~~	(See Note 6)~~4.45E-03~~	~~1.57E-03~~	~~1.88E-03~~	4.30E-03	~~3.28E-03~~
2–8 hours (s/m^3)	1.73E-03	5.68E-03	~~1.47E-03~~	(See Note 6)~~8.97E-04~~	(See Note 6)~~3.95E-03~~	~~1.36E-03~~	~~1.63E-03~~	3.71E-03	~~2.83E-03~~
8–24 hours (s/m^3)	6.74E-04	2.34E-03	~~6.28E-04~~	(See Note 6)~~3.53E-04~~	(See Note 6)~~1.70E-03~~	~~5.44E-04~~	~~6.47E-04~~	1.46E-03	~~1.12E-03~~
1–4 days (s/m^3)	5.12E-04	1.63E-03	~~4.19E-04~~	(See Note 6)~~2.66E-04~~	(See Note 6)~~1.11E-03~~	~~4.11E-04~~	~~4.93E-04~~	1.12E-03	~~8.57E-04~~
4–30 days (s/m^3)	4.72E-04	1.50E-03	~~3.81E-04~~	(See Note 6)~~2.46E-04~~	(See Note 6)~~1.00E-03~~	~~3.78E-04~~	~~4.52E-04~~	1.03E-03	~~7.86E-04~~

Table 2.1-1—U.S. EPR Site Design Envelope
Sheet 7 of 7

U.S. EPR Site Design Envelope									
Main Control Room/Technical Support Center Unfiltered Inleakage Atmospheric Dispersion Factors for Onsite Accident Dose Analysis (χ/Q)									
Time Period	Vent Stack Base	Releases via Safe-guard Building Canopy ~~#1~~	~~Releases via Safe-guard Building Canopy #2~~	Equip-ment Hatch Releases via Mate-rial Lock	Depres-surization Shaft Releases	~~Main Steam Relief Train Silencer #1~~	~~Main Steam Relief Train Silencer #2~~	Main Steam Relief Train Silencer #3	~~Main Steam Relief Train Silencer #4~~
0–2 hours (s/m^3)	4.30E-03	1.67E-02	~~3.03E-03~~	(See Note 6)~~1.65E-03~~	(See Note 6)~~7.52E-03~~	~~1.93E-03~~	~~2.43E-03~~	1.76E-02	~~8.65E-03~~
2–8 hours (s/m^3)	3.71E-03	1.47E-02	~~2.68E-03~~	(See Note 6)~~1.47E-03~~	(See Note 6)~~6.67E-03~~	~~1.66E-03~~	~~2.12E-03~~	1.48E-02	~~7.21E-03~~
8–24 hours (s/m^3)	1.46E-03	5.96E-03	~~1.15E-03~~	(See Note 6)~~5.74E-04~~	(See Note 6)~~2.88E-03~~	~~6.69E-04~~	~~8.28E-04~~	5.88E-03	~~2.96E-03~~
1–4 days (s/m^3)	1.12E-03	4.28E-03	~~7.59E-04~~	(See Note 6)~~4.37E-04~~	(See Note 6)~~1.89E-03~~	~~5.02E-04~~	~~6.38E-04~~	4.55E-03	~~2.22E-03~~
4–30 days (s/m^3)	1.03E-03	3.89E-03	~~6.89E-04~~	(See Note 6)~~4.00E-04~~	(See Note 6)~~1.71E-03~~	~~4.65E-04~~	~~5.85E-04~~	4.16E-03	~~2.06E-03~~

1. The effect of the extreme liquid winter precipitation event on roof loads is negligible due to the lack of parapets.~~The maximum 48-hour PMWP liquid of 32 inches is based on data obtained from National Oceanic and Atmospheric Administration Hydrometeorological Report No. 53 "Seasonal Variation of 10-square-mile Probable Maximum Precipitation Estimates, United States East of the 105th Meridian" for the three winter months—December through February. However, the effect of rainfall events on roof loads is negligible, due to the lack of parapets.~~

2. Deleted.~~COL applicant to determine wet bulb temperature correction factor to account for potential interference and recirculation effects. (Refer to COL Item 2.0-1 in Table 1.8-2—U.S. EPR Combined License Information Items).~~
3. By definition, zero percent exceedance temperature values exclude peaks of temperatures less than two hours in duration. The zero percent exceedance temperature values are based on conservative estimates of 100-year return period values and historic extreme values, whichever is bounding.
4. For maximum values, data from the summer months or June, July, and August are used. For minimum values, data from the winter months of December, January, and February are used.
5. Deleted.~~COL applicant to confirm potential UHS cooling tower interference effects on safety-related air intakes do not result in air intake inlet conditions that exceed the site design envelope ambient air conditions (refer to COL Item 2.0-1 in Table 1.8-2—U.S. EPR Combined License Information Items).~~
6. The atmospheric dispersion parameters for the equipment hatch and depressurization shaft releases are bounded by the parameters for the releases via the Safeguard Building canopy.

Next File

the addition of the weight of the extreme frozen or liquid precipitation event, whichever is greater. Snow pack and snowfall are adjusted for density differences and ground level values are adjusted to represent appropriate weights on roofs.

A COL applicant that references the U.S. EPR design certification will provide site-specific characteristics for regional climatology.

2.3.1.2 Meteorological Data for Evaluating the Ultimate Heat Sink

As described in Section 9.2.5, the ultimate heat sink (UHS) is designed to operate for a nominal 30 days following a LOCA without requiring any makeup water to the source, or it must be demonstrated that replenishment or use of an alternate or additional water supply can provide continuous capability of the heat sink to perform its safety-related functions. The tower basin contains a minimum 72-hour supply of water.

Meteorological conditions resulting in the maximum evaporative and drift loss of water for the UHS over a 72 hour period are presented in Table 9.2.5-3. The UHS cooling tower basin is designed considering the ~~air~~wet bulb temperature data of Table 9.2.5-2 ~~2.1-1~~ and maintains its cooling function for the Table 9.2.5-3 meteorological conditions.

Water makeup to the UHS cooling tower basin beyond 72 hours is site-specific. As described in Section 9.2.5.3, the COL applicant ~~that references the U.S. EPR design certification~~ will describe the means for providing UHS makeup sufficient to meet the maximum evaporative and drift water loss after 72 hours through the remainder of the 30 day period consistent with RG 1.27.

Meteorological conditions resulting in minimum water cooling are presented in Table 9.2.5-4. These conditions reflect a 1 day period where evaporative cooling is at a minimum. The UHS heat loads peak and decline within the first day, such that extending the 1 day meteorological profile for 5 consecutive days does not cause the UHS cooling tower basin water temperature to exceed the maximum temperature of 95°F listed in Table 9.2.5-2. The potential for water freezing in the UHS water storage facility is addressed in Section 2.4.

2.3.2 Local Meteorology

A COL applicant that references the U.S. EPR design certification will provide site-specific characteristics for local meteorology.

2.3.3 Onsite Meteorological Measurement Program

A COL applicant that references the U.S. EPR design certification will provide the site-specific, onsite meteorological measurement program.

Table 3.2.2-1—Classification Summary
Sheet 1 of 185

KKS System or Component Code	SSC Description	Safety Classification (Note 15)	Quality Group Classification	Seismic Category (Note 16)	10 CFR 50 Appendix B Program (Note 5)	Location (Note 17)	Comments/ Commercial Code
REACTOR COOLANT SYSTEM							
JE, JA, JDA	**Reactor Coolant System**						
30JEF10 AA009/010	Bypass Valves for PDS Valves	S	A	I	Yes	UJA	ASME Class 1[1]
30JEC10/20/30/40	Cold Leg Instrument Piping and Root Valves	S	B	I	Yes	UJA	ASME Class 2[2]
30JEC10/20/30/40 BR003	Cold Leg Piping	S	A	I	Yes	UJA	ASME Class 1[1]
JDA	Control Rod Drive Mechanism - Bottom Position Limit Sensors	S	N/A	I	Yes	UJA	
JDA	Control Rod Drive Mechanism - Latch Mechanism	S	N/A	I	Yes	UJA	
JDA	Control Rod Drive Mechanism - Operating Coils	NS-AQ	N/A	II	Yes	UJA	
JDA	Control Rod Drive Mechanism - Pressure Boundary	S	A	I	Yes	UJA	ASME Class 1[1]

Table 3.2.2-1—Classification Summary
Sheet 2 of 185

KKS System or Component Code	SSC Description	Safety Classification (Note 15)	Quality Group Classification	Seismic Category (Note 16)	10 CFR 50 Appendix B Program (Note 5)	Location (Note 17)	Comments/ Commercial Code
30JEC10/20/30/40	Cross-over Leg Instrument Piping and Root Valves	S	B	I	Yes	UJA	ASME Class 2[2]
30JEC10/20/30/40 BR002	Cross-over Leg Piping	S	A	I	Yes	UJA	ASME Class 1[1]
JAC	Heavy Reflector - Centering Pins	S	B	I	Yes	UJA	ASME Class CS[4]
JAC	Heavy Reflector - Normal and Centering Rings	S	B	I	Yes	UJA	ASME Class CS[4]
JAC	Heavy Reflector - Positioning Keys	NS-AQ	D	II	Yes	UJA	ASME Class CS[4] (Internal Structure)
JAC	Heavy Reflector - Slabs	S	B	I	Yes	UJA	ASME Class CS[4]
JAC	Heavy Reflector - Tie Rods	S	B	I	Yes	UJA	ASME Class CS[4]
JAC	Heavy Reflector - Upper Core Plate Guide Pins	S	B	I	Yes	UJA	ASME Class CS[4]
JAC	Heavy Reflector - Vertical Keys	S	B	I	Yes	UJA	ASME Class CS[4]
30JEC10/20/30/40	Hot Leg Instrument Piping and Root Valves	S	A	I	Yes	UJA	ASME Class 1[1]

Table 3.2.2-1—Classification Summary
Sheet 3 of 185

KKS System or Component Code	SSC Description	Safety Classification (Note 15)	Quality Group Classification	Seismic Category (Note 16)	10 CFR 50 Appendix B Program (Note 5)	Location (Note 17)	Comments/ Commercial Code
30JEC10/20/30/40 BR001	Hot Leg Piping	S	A	I	Yes	UJA	ASME Class 1[1]
30JEF10 BR004	PDS Discharge Line Pipe #1	S	A	I	Yes	UJA	ASME Class 1[1]
30JEF10 BR006	PDS Discharge Line Pipe #2	S	A	I	Yes	UJA	ASME Class 1[1]
30JEF10 AA004-007	PDS Valves	S	A	I	Yes	UJA	ASME Class 1[1]
30JAA10	Post Accident High Point Vent Piping (downstream of Valves 30JAA10 AA509/511)	NS-AQ	D	II	Yes	UJA	ANSI/ASME B31.1[6]
30JAA10	Post Accident High Point Vent Piping (upstream of Valves 30JAA10 AA508/ 510)	S	A	I	Yes	UJA	ASME Class 1[1]
30JAA10 AA508-511	Post Accident RPV High Point Vent Valves	S	A	I	Yes	UJA	ASME Class 1[1]
30JEF10 BB001	Pressurizer	S	A	I	Yes	UJA	ASME Class 1[1]
30JEF10	Pressurizer Auxiliary Spray Line & Valve	S	A	I	Yes	UJA	ASME Class 1[1]
30JEF10 AA002/003	Pressurizer By-Pass Manual Spray Valves	S	A	I	Yes	UJA	ASME Class 1[1]

Table 3.2.2-1—Classification Summary
Sheet 4 of 185

KKS System or Component Code	SSC Description	Safety Classification (Note 15)	Quality Group Classification	Seismic Category (Note 16)	10 CFR 50 Appendix B Program (Note 5)	Location (Note 17)	Comments/ Commercial Code
30JEF10 BR002/003	Pressurizer By-Pass Spray Lines	S	A	I	Yes	UJA	ASME Class 1[1]
30JEF10 BR402	Pressurizer Degassing Drain Line Pipe #1	S	B	I	Yes	UJA	ASME Class 2[2]
30JEG10 BR403	Pressurizer Degassing Drain Line Pipe #2	NS-AQ	D	II	Yes	UJA	ANSI/ASME B31.1[6]
30JEF10 AA402/403	Pressurizer Degassing Drain Valves	S	B	I	Yes	UJA	ASME Class 2[2]
30JEG10	Pressurizer Degassing Piping & Valves (downstream of Valve 30JEF10 AA504)	NS-AQ	D	II	Yes	UJA	ANSI/ASME B31.1[6], ANSI/ASME B16.34[7]
30JEG10	Pressurizer Degassing Piping & Valves (upstream of Valve 30JEF10 AA503)	S	B	I	Yes	UJA	ASME Class 2[2]
30JEF10 AA503/504	Pressurizer Degassing Valves	S	B	I	Yes	UJA	ASME Class 2[2]
30JEF10 AH	Pressurizer Heater Assemblies - Pressure Boundary	S	A	I	Yes	UJA	ASME Class 1[1]

Table 3.2.2-1—Classification Summary
Sheet 5 of 185

KKS System or Component Code	SSC Description	Safety Classification (Note 15)	Quality Group Classification	Seismic Category (Note 16)	10 CFR 50 Appendix B Program (Note 5)	Location (Note 17)	Comments/ Commercial Code
30JEF10 BR301/302/303/304 and 30JEF10 AA301/302/303/304	Pressurizer Upper Instrumentation Piping and Root Valves	S	A	I	Yes	UJA	ASME Class 1[1]
30JEF10 BR305/306/307/308 and 30JEF10 AA305/306/307/308	Pressurizer Lower Instrumentation Piping and Root Valves	S	B	I	Yes	UJA	ASME Class 2[2]
30JEF10 BR102/103	Pressurizer Normal Spray Lines	S	A	I	Yes	UJA	ASME Class 1[1]
30JEF10 AA102/103	Pressurizer Normal Spray Valves	S	A	I	Yes	UJA	ASME Class 1[1]
30JEG10	Pressurizer Relief Tank and Associated Piping & Valves (downstream of PSRV and PDS Valves)	NS-AQ	D	II	Yes	UJA	ANSI/ASME B31.1[6], ANSI/ASME B16.34[7], ASME VIII[8]
30JEF10	Pressurizer Sampling Line & Valve	S	B	I	Yes	UJA	ASME Class 2[2]
30JEC30 BR004	Pressurizer Surge Line	S	A	I	Yes	UJA	ASME Class 1[1]

Table 3.2.2-1—Classification Summary
Sheet 6 of 185

KKS System or Component Code	SSC Description	Safety Classification (Note 15)	Quality Group Classification	Seismic Category (Note 16)	10 CFR 50 Appendix B Program (Note 5)	Location (Note 17)	Comments/ Commercial Code
30JEG10	Pressurizer Vacuum Pump/Nitrogen Piping & Valves (downstream of Valve 30JEF10 AA502)	NS-AQ	D	II	Yes	UJA	ANSI/ASME B31.1[6], ANSI/ASME B16.34[7]
30JEF10 BR501	Pressurizer Vacuum Pump/Nitrogen Supply Line	S	A	I	Yes	UJA	ASME Class 1[1]
30JEF10 AA501/502	Pressurizer Vacuum Pump/Nitrogen Valves	S	A	I	Yes	UJA	ASME Class 1[1]
30JEF10 AA191-193	PSRVs	S	A	I	Yes	UJA	ASME Class 1[1]
30JEB10/20/30/40	RCP Motors - Rotating Assemblies/ Bearings/Bearing Supports/Motor Frames	S	N/A	I	Yes	UJA	ASME III Allowables as applicable
30JEB10/20/30/40	RCP Motors - Oil Collection System	NS-AQ	D	II	Yes	UJA	ANSI/ASME B31.1[6], ANSI/ASME B16.34[7], API 620[10]
30JEB10/20/30/40	RCP Motors - Oil Coolers/Air Coolers/ Oil Lift Pumps (non-motor)	S	C	I	Yes	UJA	ASME Class 3[3]

Table 3.2.2-1—Classification Summary
Sheet 7 of 185

KKS System or Component Code	SSC Description	Safety Classification (Note 15)	Quality Group Classification	Seismic Category (Note 16)	10 CFR 50 Appendix B Program (Note 5)	Location (Note 17)	Comments/ Commercial Code
30JEB10/20/30/40	RCP Motors - Remaining Parts	NS-AQ	N/A	II	Yes	UJA	NEMA MG 1-2006
30JEB10/20/30/40	RCP Seal #1 Injection Line Auxiliary Piping and Valves	S	B	I	Yes	UJA	ASME Class 2[2]
30JEB10/20/30/40	RCP Seal #1 Sweeping Line Auxiliary Piping and Valves	S	B	I	Yes	UJA	ASME Class 2[2]
30JEB10/20/30/40	RCP Seal #2 Auxiliary Piping and Valves	NS-AQ	D	II	Yes	UJA	ANSI/ASME B31.1[6], ANSI/ASME B16.34[7]
30JEB10/20/30/40	RCP Seal #3 Auxiliary Piping and Valves	NS-AQ	D	II	Yes	UJA	ANSI/ASME B31.1[6], ANSI/ASME B16.34[7]
30JEB10/20/30/40	RCP Standstill Seal System Auxiliary Piping and Valves	NS-AQ	D	II	Yes	UJA	ANSI/ASME B31.1[6], ANSI/ASME B16.34[7]
30JEB10/20/30/40	RCP Thermal Barrier Auxiliary Piping and Valves	S	C	I	Yes	UJA	ASME Class 3[3]
30JEB10/20/30/40 AP001	Reactor Coolant Pump Bodies	S	A	I	Yes	UJA	ASME Class 1[1]

Table 3.2.2-1—Classification Summary
Sheet 8 of 185

KKS System or Component Code	SSC Description	Safety Classification (Note 15)	Quality Group Classification	Seismic Category (Note 16)	10 CFR 50 Appendix B Program (Note 5)	Location (Note 17)	Comments/ Commercial Code
30JAH10 BU	Reactor Coolant System Insulation	NS-AQ	N/A	II	Yes	UJA	
30JAA10 BB001	Reactor Pressure Vessel Pressure Boundary	S	A	I	Yes	UJA	ASME Class 1[1]
30JAA10BB001	Reactor Pressure Vessel (Radial Keys)	S	B	I	Yes	UJA	ASME Class CS[4]
30JAA10	RPV High Point Vent Piping & Valves (downstream of Valve 30JAA10 AA502)	NS-AQ	D	II	Yes	UJA	ANSI/ASME B31.1[6], ANSI/ASME B16.34[7]
30JAA10	RPV High Point Vent Piping (upstream of Valve 30JAA10 AA501)	S	A	I	Yes	UJA	ASME Class 1[1]
30JAA10 AA501/502	RPV High Point Vent Valves	S	A	I	Yes	UJA	ASME Class 1[1]
JAC	RPV Internals - Control Rod Drive Mechanism Adaptor Thermal Sleeves	NS-AQ	D	II	Yes	UJA	ASME Class CS[4] (Internal Structure)
30JAB	RPV Refueling Cavity Seal	NS-AQ	D	I	Yes	UJA	

Table 3.2.2-1—Classification Summary
Sheet 9 of 185

KKS System or Component Code	SSC Description	Safety Classification (Note 15)	Quality Group Classification	Seismic Category (Note 16)	10 CFR 50 Appendix B Program (Note 5)	Location (Note 17)	Comments/ Commercial Code
JAC	RPV Internals - Handling Studs and Inserts	NS-AQ	D	II	Yes	UJA	ASME Class CS[4] (Internal Structure)
JAC	RPV Internals - Head and Vessel Alignment Pins	NS-AQ	D	II	Yes	UJA	ASME Class CS[4] (Internal Structure)
JAC	RPV Internals - Hold Down Spring	S	B	I	Yes	UJA	ASME Class CS[4]
JAC	RPV Internals - Radial Key Inserts	S	B	I	Yes	UJA	ASME Class CS[4]
JAC	RPV Lower Internals - Core Barrel (Flange and Shells)	S	B	I	Yes	UJA	ASME Class CS[4]
JAC	RPV Lower Internals - Dome Spray Nozzles	NS-AQ	D	II	Yes	UJA	ASME Class CS[4] (Internal Structure)
JAC	RPV Lower Internals - Flow Distribution Device	NS-AQ	D	II	Yes	UJA	ASME Class CS[4] (Internal Structure)
JAC	RPV Lower Internals - Fuel Assembly Guide Pin	S	B	I	Yes	UJA	ASME Class CS[4]
JAC	RPV Lower Internals - Irradiation Capsule Access Plug	NS-AQ	D	II	Yes	UJA	ASME Class CS[4] (Internal Structure)

Table 3.2.2-1—Classification Summary
Sheet 10 of 185

KKS System or Component Code	SSC Description	Safety Classification (Note 15)	Quality Group Classification	Seismic Category (Note 16)	10 CFR 50 Appendix B Program (Note 5)	Location (Note 17)	Comments/ Commercial Code
JAC	RPV Lower Internals - Irradiation Capsule Basket	NS-AQ	D	II	Yes	UJA	ASME Class CS[4] (Internal Structure)
JAC	RPV Lower Internals - Lower Support Plate	S	B	I	Yes	UJA	ASME Class CS[4]
JAC	RPV Lower Internals - Radial Key Inserts	S	B	I	Yes	UJA	ASME Class CS[4]
30JAA10	RPV O-Ring Leakoff Piping & Valves	NS-AQ	D	II	Yes	UJA	ANSI/ASME B31.1[6], ANSI/ASME B16.34[7]
JAC	RPV Upper Internals - Control Rod Guide Assembly	S	B	I	Yes	UJA	ASME Class CS[4] (Internal Structure)
JAC	RPV Upper Internals - Control Rod Guide Assembly Columns	S	B	I	Yes	UJA	ASME Class CS[4]
JAC	RPV Upper Internals - Control Rod Guide Assembly Support Pins	S	B	I	Yes	UJA	ASME Class CS[4]
JAC	RPV Upper Internals - Guide Tubes for Incore Instrumentation	S	B	I	Yes	UJA	ASME Class CS[4] (Internal Structure)

Table 3.2.2-1—Classification Summary
Sheet 11 of 185

KKS System or Component Code	SSC Description	Safety Classification (Note 15)	Quality Group Classification	Seismic Category (Note 16)	10 CFR 50 Appendix B Program (Note 5)	Location (Note 17)	Comments/ Commercial Code
JAC	RPV Upper Internals - Level Measurement Probe Columns	NS-AQ	D	II	Yes	UJA	ASME Class CS[4] (Internal Structure)
JAC	RPV Upper Internals - Level Measurement Probe Upper Housing	NS-AQ	D	II	Yes	UJA	ASME Class CS[4] (Internal Structure)
JAC	RPV Upper Internals - Normal Support Columns	S	B	I	Yes	UJA	ASME Class CS[4]
JAC	RPV Upper Internals - Upper Core Plate	S	B	I	Yes	UJA	ASME Class CS[4]
JAC	RPV Upper Internals - Upper Fuel Pins	S	B	I	Yes	UJA	ASME Class CS[4]
JAC	RPV Upper Internals - Upper Support Plate (Flange & Shell)	S	B	I	Yes	UJA	ASME Class CS[4]
30JEA10/20/30/40	Steam Generator Instrument Piping and Root Valves	S	B	I	Yes	UJA	ASME Class 2[2]
30JEA10/20/30/40	Steam Generator Sampling Line and Valve	S	B	I	Yes	UJA	ASME Class 2[2]

Table 3.2.2-1—Classification Summary
Sheet 12 of 185

KKS System or Component Code	SSC Description	Safety Classification (Note 15)	Quality Group Classification	Seismic Category (Note 16)	10 CFR 50 Appendix B Program (Note 5)	Location (Note 17)	Comments/ Commercial Code
30JEA10/20/30/40 AC001	Steam Generators, Primary	S	A	I	Yes	UJA	ASME Class 1[1]
30JEA10/20/30/40 AC001	Steam Generators, Secondary	S	B	I	Yes	UJA	ASME Class 2[2]
FRONT LINE SYSTEMS							
JNA	**Residual Heat Removal System**						
30JNA10/20/30/40 BR009	Bypass Piping around RHR 1st RCPB Isolation Valve Containing RHR 1st RCPB Bypass Check Valve	S	B	I	Yes	UJA	ASME Class 2[2]
30JNK10/11 BR195	LHSI /RHRS Overpressure Protection Piping between RHR Suction Line Safety Relief Valve and IRWSTS	S	B	I	Yes	UJA	ASME Class 2[2]
30JNK10/11 BR192	LHSI /RHRS Overpressure Protection Piping between RHR Suction Line Safety Relief Valve and IRWSTS	S	B	I	Yes	UJA	ASME Class 2[2]

Table 3.2.2-1—Classification Summary
Sheet 13 of 185

KKS System or Component Code	SSC Description	Safety Classification (Note 15)	Quality Group Classification	Seismic Category (Note 16)	10 CFR 50 Appendix B Program (Note 5)	Location (Note 17)	Comments/ Commercial Code
30JNA30/40 AA006	LHSI Heat Exchanger Bypass Check Valve on Purification Line to CVCS	S	B	I	Yes	UJH	ASME Class 2[2]
30JNA10/20/30/40 AA101	LHSI Heat Exchanger Bypass Control Valve	S	B	I	Yes	UJH	ASME Class 2[2]
30JNA30/40 AA004	LHSI Heat Exchanger Bypass Isolation Valve on Purification Line to CVCS	S	B	I	Yes	UJH	ASME Class 2[2]
30JNA30/40 AA103	LHSI Heat Exchanger Bypass Throttle Valve on Purification Line to CVCS	S	B	I	Yes	UJH	ASME Class 2[2]
30JNA10/20/30/40 BR004	LHSI RHR Heat Exchanger Bypass Line Containing LHSI Heat Exchanger Bypass Valve	S	B	I	Yes	UJH	ASME Class 2[2]

Table 3.2.2-1—Classification Summary
Sheet 14 of 185

KKS System or Component Code	SSC Description	Safety Classification (Note 15)	Quality Group Classification	Seismic Category (Note 16)	10 CFR 50 Appendix B Program (Note 5)	Location (Note 17)	Comments/ Commercial Code
30JNA10/20/30/40 BR002	Piping between Containment Penetrations (30JMK10 BQ103, 30JMK20 BQ203, 30JMK30 BQ308, and 30JMK40 BQ403) and RHR 2nd RCPB Isolation Valve	S	B	I	Yes	UJA	ASME Class 2[2]
30JNA30/40 BR006	Piping between LHSI HX Downstream Line and Purification Line to CVCS containing LHSI HX Throttle Bypass Valve	S	B	I	Yes	UJH	ASME Class 2[2]
30JNA10/20/30/40 BR326	Piping between RCS Hot Leg and RCS Hot Leg Pressure Sensor Root Valve	S	B	I	Yes	UJA	ASME Class 2[2]
30JNA10/20/30/40 BR315	Piping between RCS Suction Line and RHR Suction Line Pressure Sensor Root Valve	S	B	I	Yes	UJA	ASME Class 2[2]

Table 3.2.2-1—Classification Summary
Sheet 15 of 185

KKS System or Component Code	SSC Description	Safety Classification (Note 15)	Quality Group Classification	Seismic Category (Note 16)	10 CFR 50 Appendix B Program (Note 5)	Location (Note 17)	Comments/ Commercial Code
30JNA10/20/30/40 BR191	Piping between RCS Suction Line and RHR Suction Line Safety Relief Valve	S	B	I	Yes	UJA	ASME Class 2[2]
30JNA10/20/30/40 BR003	Piping between Suction Side of LHSI Pump and Containment Penetrations (30JMK10 BQ103, 30JMK20 BQ203, 30JMK30 BQ308, 30JMK40 BQ403) Containing RHR Outside Containment Isolation Valve	S	B	I	Yes	UJH	ASME Class 2[2]
30JNA40 BR007	Purification Line between LHSI HX Bypass Line and CVCS Piping	S	B	I	Yes	UJH	ASME Class 2[2]
30JNA30 BR007	Purification Line between LHSI HX Bypass Line and Train 4 Purification Line	S	B	I	Yes	UJH	ASME Class 2[2]

Table 3.2.2-1—Classification Summary
Sheet 16 of 185

KKS System or Component Code	SSC Description	Safety Classification (Note 15)	Quality Group Classification	Seismic Category (Note 16)	10 CFR 50 Appendix B Program (Note 5)	Location (Note 17)	Comments/ Commercial Code
30JNA10/20/30/40 BR001	RCS Suction Line Piping between RHR 2nd RCPB Isolation Valve and Connection to RCS Hot Leg in RCS	S	A	I	Yes	UJA	ASME Class 1[1]
30JNA10/20/30/40 AA009	RHR 1st RCPB Bypass Check Valve	S	B	I	Yes	UJA	ASME Class 2[2]
30JNA10/20/30/40 AA001	RHR 1st RCPB Isolation Valve	S	A	I	Yes	UJA	ASME Class 1[1]
30JNA10/20/30/40 AA002	RHR 2nd RCPB Isolation Valve	S	A	I	Yes	UJA	ASME Class 1[1]
30JNA10/20/30/40 AA003	RHR Outside Containment Isolation Valve	S	B	I	Yes	UJH	ASME Class 2[2]
30JNA10/20/30/40 AA191	RHR Suction Line Safety Relief Valve	S	B	I	Yes	UJA	ASME Class 2[2]

Table 3.2.2-1—Classification Summary
Sheet 17 of 185

KKS System or Component Code	SSC Description	Safety Classification (Note 15)	Quality Group Classification	Seismic Category (Note 16)	10 CFR 50 Appendix B Program (Note 5)	Location (Note 17)	Comments/ Commercial Code
JND	**Medium Head Safety Injection System**						
30JND10/20/30/40 BP001	Flow Restrictor at Inlet of MHSI Large Miniflow Line Isolation Valve	S	B	I	Yes	UJA	ASME Class 2[2]
30JND10/20/30/40 BP002	Flow Restrictor at Inlet of MHSI Small Miniflow Line Isolation Valve	S	B	I	Yes	UJA	ASME Class 2[2]
30JND10/20/30/40 BP003	Flow Restrictor in MHSI Pump Discharge Line between MHSI Inside Containment Isolation Valve and MHSI 2nd RCPB Isolation Valve	S	B	I	Yes	UJA	ASME Class 2[2]
30JND10/20/30/40 AA003	MHSI 2nd RCPB Isolation Valve	S	A	I	Yes	UJA	ASME Class 1[1]
30JND10/20/30/40 AA103	MHSI Control Valve	S	B	I	Yes	UJA	ASME Class 2[2]
30JND10/20/30/40 AA007	MHSI Inside Containment Isolation Valve	S	B	I	Yes	UJA	ASME Class 2[2]

Table 3.2.2-1—Classification Summary
Sheet 18 of 185

KKS System or Component Code	SSC Description	Safety Classification (Note 15)	Quality Group Classification	Seismic Category (Note 16)	10 CFR 50 Appendix B Program (Note 5)	Location (Note 17)	Comments/ Commercial Code
30JND10/20/30/40 AA005	MHSI Large Miniflow Line Isolation Valve	S	B	I	Yes	UJA	ASME Class 2[2]
30JND10/20/30/40 AA002	MHSI Outside Containment Isolation Valve	S	B	I	Yes	UJH	ASME Class 2[2]
30JND10/20/30/40 AP001	MHSI Pump	S	B	I	Yes	UJH	ASME Class 2[2]
30JND10/20/30/40 AA004	MHSI Small Miniflow Line Isolation Valve	S	B	I	Yes	UJA	ASME Class 2[2]
30JND10/20/30/40 AA001	MHSI Suction Isolation Valve	S	B	I	Yes	UJH	ASME Class 2[2]
30JND10/20/30/40 BR012	Piping between Containment Penetrations (30JMK10 BQ102, 30JMK20 BQ202, 30JMK30 BQ302, and 30JMK40 BQ402) and Inlet of MHSI Inside Containment Isolation Valve	S	B	I	Yes	UJA	ASME Class 2[2]

Table 3.2.2-1—Classification Summary
Sheet 19 of 185

KKS System or Component Code	SSC Description	Safety Classification (Note 15)	Quality Group Classification	Seismic Category (Note 16)	10 CFR 50 Appendix B Program (Note 5)	Location (Note 17)	Comments/ Commercial Code
30JND10/20/30/40 BR002	Piping between MHSI Pump and MHSI Outside Containment Isolation Valve	S	B	I	Yes	UJH	ASME Class 2[2]
30JND10/20/30/40 BR003	Piping between Inlet of MHSI Inside Containment Isolation Valve and MHSI 2nd RCPB Isolation Valve	S	B	I	Yes	UJA	ASME Class 2[2]
30JND10/20/30/40 BR001	Piping between IRWSTS 3-Way Isolation Valve and Flange at Suction of MHSI Pump	S	B	I	Yes	UJH	ASME Class 2[2]
30JND10/20/30/40 BR004	Piping between MHSI 2nd RCPB Isolation Valve and Cold Leg Injection Line	S	A	I	Yes	UJA	ASME Class 1[1]
30JND10/20/30/40 BR008	Piping between MHSI Large and Small Miniflow Line Isolation Valves to the Miniflow Line Header	S	B	I	Yes	UJA	ASME Class 2[2]

Table 3.2.2-1—Classification Summary
Sheet 20 of 185

KKS System or Component Code	SSC Description	Safety Classification (Note 15)	Quality Group Classification	Seismic Category (Note 16)	10 CFR 50 Appendix B Program (Note 5)	Location (Note 17)	Comments/ Commercial Code
30JNK10/11 BR098/ 099	Piping between MHSI Large and Small Miniflow Lines to the MHSI Miniflow Line Header going into the IRWSTS	S	B	I	Yes	UJA	ASME Class 2[2]
30JND10/20/30/40 BR005	Piping between MHSI Large Miniflow Line and Inlet of MHSI Small Miniflow Line Isolation Valve	S	B	I	Yes	UJA	ASME Class 2[2]
30JND10/20/30/40 BR011	Piping Between MHSI Outside Containment Valves and Containment Penetrations (30JMK10 BQ102, 30JMK20 BQ202, 30JMK30 BQ302, and 30JMK40 BQ402)	S	B	I	Yes	UJH	ASME Class 2[2]

Table 3.2.2-1—Classification Summary
Sheet 21 of 185

KKS System or Component Code	SSC Description	Safety Classification (Note 15)	Quality Group Classification	Seismic Category (Note 16)	10 CFR 50 Appendix B Program (Note 5)	Location (Note 17)	Comments/ Commercial Code
30JND10/20/30/40 BR006	Piping between MHSI Pump Discharge Line and Inlet of MHSI Large Miniflow Line Isolation Valve	S	B	I	Yes	UJA	ASME Class 2[2]
30JND10/20/30/40 BR313	Piping between MHSI Pump Discharge Line and Inlet to MHSI Flowrate Sensor Root Valve	S	B	I	Yes	UJH	ASME Class 2[2]
30JND10/20/30/40 BR311	Piping between MHSI Pump Discharge Line and MHSI Pump Downstream Pressure Indicator (Local) Root Valve	S	B	I	Yes	UJH	ASME Class 2[2]
30JND10/20/30/40 BR312	Piping between MHSI Pump Discharge Line and MHSI Pump Downstream Pressure Sensor Root Valve	S	B	I	Yes	UJH	ASME Class 2[2]

Table 3.2.2-1—Classification Summary
Sheet 22 of 185

KKS System or Component Code	SSC Description	Safety Classification (Note 15)	Quality Group Classification	Seismic Category (Note 16)	10 CFR 50 Appendix B Program (Note 5)	Location (Note 17)	Comments/ Commercial Code
30JND10/20/30/40 BR314	Piping between MHSI Pump Discharge Line and Outlet of MHSI Flowrate Sensor Root Valve	S	B	I	Yes	UJH	ASME Class 2[2]
30JND40 BR010	Piping between MHSI Suction Isolation Valve and IRWSTS Three-Way Isolation Valve	S	B	I	Yes	UJH	ASME Class 2[2]
30JND10/20/30/40 BR310	Piping between Suction Line of MHSI Pump and MHSI Pump Upstream Pressure Indicator (Local) Root Valve	S	B	I	Yes	UJH	ASME Class 2[2]
JNG	**Low Head Safety Injection System**						
30JNG13/23/33/43 BP001	1st Flow Restrictor in Accumulator Filling Line	S	B	I	Yes	UJA	ASME Class 2[2]
30JNG13/23/33/43 BP002	2nd Flow Restrictor in Accumulator Filling Line	S	B	I	Yes	UJA	ASME Class 2[2]

Table 3.2.2-1—Classification Summary
Sheet 23 of 185

KKS System or Component Code	SSC Description	Safety Classification (Note 15)	Quality Group Classification	Seismic Category (Note 16)	10 CFR 50 Appendix B Program (Note 5)	Location (Note 17)	Comments/ Commercial Code
30JNG13/23/33/43 AA009	Accumulator Check Valve	S	A	I	Yes	UJA	ASME Class 1[1]
30JNG13/23/33/43 BR002	Accumulator Cold Leg Pressurization Line between Outlet of Accumulator Check Valve and Inlet of SIS 1st RCPB Isolation Valve	S	A	I	Yes	UJA	ASME Class 1[1]
30JNG13/23/33/43 AA101	Accumulator Depressurization Control Valve	S	B	I	Yes	UJA	ASME Class 2[2]
30JNG13/23/33/43 AA502	Accumulator Depressurization Isolation Valve	S	B	I	Yes	UJA	ASME Class 2[2]
30JNG13/23/33/43 AA003	Accumulator Filling Line Check Valve	S	B	I	Yes	UJA	ASME Class 2[2]
30JNG13/23/33/43 AA002	Accumulator Filling Line Isolation Valve	S	B	I	Yes	UJA	ASME Class 2[2]
30JNG13/23/33/43 AA008	Accumulator Isolation Valve	S	B	I	Yes	UJA	ASME Class 2[2]
30JNG13/23/33/43 AA197	Accumulator Safety Relief Valve	S	B	I	Yes	UJA	ASME Class 2[2]

Table 3.2.2-1—Classification Summary
Sheet 24 of 185

KKS System or Component Code	SSC Description	Safety Classification (Note 15)	Quality Group Classification	Seismic Category (Note 16)	10 CFR 50 Appendix B Program (Note 5)	Location (Note 17)	Comments/ Commercial Code
30JNG13/23/33/43 AA007	Accumulator-Nitrogen Distribution Check Valve	S	B	I	Yes	UJA	ASME Class 2[2]
30JNG13/23/33/43 AA006	Accumulator-Nitrogen Distribution Isolation Valve	S	B	I	Yes	UJA	ASME Class 2[2]
30JNG10/20/30/40 BR061	Bypass Line around LHSI Outside Containment Main Isolation Valve	S	B	I	Yes	UJH	ASME Class 2[2]
30JNG15/25/35/45 BR011	Bypass Piping around Dead Leg Pressurization Valve Downstream of the Dead Leg Pressurization Bypass Check Valve	S	A	I	Yes	UJA	ASME Class 1[1]
30JNG15/25/35/45 BR010	Bypass Piping around Dead Leg Pressurization Valve Upstream of the Dead Leg Pressurization Bypass Check Valve	S	B	I	Yes	UJA	ASME Class 2[2]

Table 3.2.2-1—Classification Summary
Sheet 25 of 185

KKS System or Component Code	SSC Description	Safety Classification (Note 15)	Quality Group Classification	Seismic Category (Note 16)	10 CFR 50 Appendix B Program (Note 5)	Location (Note 17)	Comments/ Commercial Code
30JNG10/40 BR011	Bypass Piping around LHSI Cross-Connect Isolation Valve Containing LHSI Cross-Connect Bypass Valve	S	B	I	Yes	UJA	ASME Class 2[2]
30JNG10/20/30/40 BR008	Cold leg Injection Line between LHSI 2nd RCPB Isolation Valve and Accumulator Cold Leg Injection Line	S	A	I	Yes	UJA	ASME Class 1[1]
30JNG13/23/33/43 BR007	Cold leg Injection Line between SIS 1st RCPB Isolation Valve and RCS going to the Cold Leg Nozzle	S	A	I	Yes	UJA	ASME Class 1[1]
30JNG10/40 AA012	Cross-Connect Bypass Check Valve	S	B	I	Yes	UJA	ASME Class 2[2]
30JNG10/20/30/40 BR010	Cross-Connect Piping between Trains 1 and 2 and Trains 3 and 4 respectively to the LHSI Cross-Connect Isolation Valve	S	B	I	Yes	UJA	ASME Class 2[2]

Table 3.2.2-1—Classification Summary
Sheet 26 of 185

KKS System or Component Code	SSC Description	Safety Classification (Note 15)	Quality Group Classification	Seismic Category (Note 16)	10 CFR 50 Appendix B Program (Note 5)	Location (Note 17)	Comments/ Commercial Code
30JNG15/25/35/45 AA003	Dead Leg Pressure Bypass Isolation Valve	S	B	I	Yes	UJA	ASME Class 2[2]
30JNG15/25/35/45 AA004	Dead Leg Pressure Control Isolation Valve	S	A	I	Yes	UJA	ASME Class 1[1]
30JNG15/25/35/45 AA001	Dead Leg Pressurization Valve	S	A	I	Yes	UJA	ASME Class 1[1]
30JNG15/25/35/45 AA005	Dead Leg Pressurization Bypass Check Valve	S	A	I	Yes	UJA	ASME Class 1[1]
30JNG15/25/35/45 BP001	Flow Restrictor Downstream of Dead Leg Pressure Control Isolation Valve	S	A	I	Yes	UJA	ASME Class 1[1]
30JNG10/20/30/40 BP061	Flow Restrictor in LHSI Outside Containment Main Isolation Valve Bypass Line	S	B	I	Yes	UJH	ASME Class 2[2]
30JNG10/20/30/40 BP001	Flow Restrictor in LHSI Tangential Miniflow Line	S	B	I	Yes	UJA	ASME Class 2[2]

Table 3.2.2-1—Classification Summary
Sheet 27 of 185

KKS System or Component Code	SSC Description	Safety Classification (Note 15)	Quality Group Classification	Seismic Category (Note 16)	10 CFR 50 Appendix B Program (Note 5)	Location (Note 17)	Comments/ Commercial Code
30JNG12/22/32/42 BP001	Flow Restrictor in Line between Cold Leg Injection Line and Hot Leg Suction/ Injection Line	S	B	I	Yes	UJH	ASME Class 2[2]
30JNG10/20/30/40 AA006	LHSI 2nd RCPB Isolation Valve	S	A	I	Yes	UJA	ASME Class 1[1]
30JNG10/20/30/40 AA106	LHSI Control Valve	S	B	I	Yes	UJA	ASME Class 2[2]
30JNG10/20/30/40 AA011	LHSI Cross-Connect Check Valve	S	B	I	Yes	UJA	ASME Class 2[2]
30JNG10/20/30/40 AA010	LHSI Cross-Connect Isolation Valve	S	B	I	Yes	UJA	ASME Class 2[2]
30JNG10/20/30/40 AA192	LHSI Discharge Line Safety Relief Valve	S	B	I	Yes	UJA	ASME Class 2[2]
30JNG10/20/30/40 AC001	LHSI Heat Exchanger	S	B	I	Yes	UJH	ASME Class 2[2]
30JNG10/20/30/40 AA102	LHSI Heat Exchanger Main Control Valve	S	B	I	Yes	UJH	ASME Class 2[2]
30JNG12/22/32/42 AA002	LHSI Hot Leg Injection Check Valve	S	B	I	Yes	UJH	ASME Class 2[2]

Table 3.2.2-1—Classification Summary
Sheet 28 of 185

KKS System or Component Code	SSC Description	Safety Classification (Note 15)	Quality Group Classification	Seismic Category (Note 16)	10 CFR 50 Appendix B Program (Note 5)	Location (Note 17)	Comments/ Commercial Code
30JNG12/22/32/42 AA001	LHSI Hot Leg Injection Isolation Valve	S	B	I	Yes	UJH	ASME Class 2[2]
30JNG10/20/30/40 AA009	LHSI Inside Containment Isolation Valve	S	B	I	Yes	UJA	ASME Class 2[2]
30JNG10/20/30/40 AA061	LHSI Outside Containment Bypass Isolation Valve	S	B	I	Yes	UJH	ASME Class 2[2]
30JNG10/20/30/40 AA060	LHSI Outside Containment Main Isolation Valve	S	B	I	Yes	UJH	ASME Class 2[2]
30JNG10/20/30/40 AP001	LHSI Pump	S	B	I	Yes	UJH	ASME Class 2[2]
30JNG10/20/30/40 AA003	LHSI Radial Miniflow Line Check Valve	S	B	I	Yes	UJA	ASME Class 2[2]
30JNG10/20/30/40 AA001	LHSI Suction Isolation Valve	S	B	I	Yes	UJH	ASME Class 2[2]
30JNG10/20/30/40 AA004	LHSI Tangential Miniflow Line Check Valve	S	B	I	Yes	UJA	ASME Class 2[2]

Table 3.2.2-1—Classification Summary
Sheet 29 of 185

KKS System or Component Code	SSC Description	Safety Classification (Note 15)	Quality Group Classification	Seismic Category (Note 16)	10 CFR 50 Appendix B Program (Note 5)	Location (Note 17)	Comments/ Commercial Code
30JNG13/23/33/43 BR501	Piping between Accumulator and Accumulator Depressurization Isolation Valve	S	B	I	Yes	UJA	ASME Class 2[2]
30JNG13/23/33/43 BR305	Piping between Accumulator and Accumulator Level Sensor Root Valve	S	B	I	Yes	UJA	ASME Class 2[2]
30JNG13/23/33/43 BR006	Piping between Accumulator and Accumulator Nitrogen Distribution Check Valve	S	B	I	Yes	UJA	ASME Class 2[2]
30JNG13/23/33/43 BR304	Piping between Accumulator and Accumulator Pressure Sensor Root Valve	S	B	I	Yes	UJA	ASME Class 2[2]
30JNG13/23/33/43 BR197	Piping between Accumulator and Accumulator Safety Relief Valve	S	B	I	Yes	UJA	ASME Class 2[2]

Table 3.2.2-1—Classification Summary
Sheet 30 of 185

KKS System or Component Code	SSC Description	Safety Classification (Note 15)	Quality Group Classification	Seismic Category (Note 16)	10 CFR 50 Appendix B Program (Note 5)	Location (Note 17)	Comments/ Commercial Code
30JNG13/23/33/43 BR601	Piping between Accumulator and Connection to Nuclear Sampling System	S	B	I	Yes	UJA	ASME Class 2[2]
30JNG13/23/33/43 BR302	Piping between Accumulator and Local Pressure/Level Sensor Root Valve	S	B	I	Yes	UJA	ASME Class 2[2]
30JNG13/23/33/43 BR301	Piping between Accumulator and Pressure/Level Sensor #1 Root Valve	S	B	I	Yes	UJA	ASME Class 2[2]
30JNG13/23/33/43 BR303	Piping between Accumulator and Pressure/Level Sensor #2 Root Valve	S	B	I	Yes	UJA	ASME Class 2[2]
30JNG13/23/33/43 BR005	Piping between Accumulator Fill Line and Accumulator Drain Valve	S	B	I	Yes	UJA	ASME Class 2[2]

Table 3.2.2-1—Classification Summary
Sheet 31 of 185

KKS System or Component Code	SSC Description	Safety Classification (Note 15)	Quality Group Classification	Seismic Category (Note 16)	10 CFR 50 Appendix B Program (Note 5)	Location (Note 17)	Comments/ Commercial Code
30JNG13/23/33/43 BR004	Piping between Accumulator Filling Line Isolation Valve and Accumulator Cold Leg Injection Line	S	B	I	Yes	UJA	ASME Class 2[2]
30JNG13/23/33/43 BR316	Piping between Cold leg Injection Line and Cold Leg Injection Pressure Sensor Root Valve	S	B	I	Yes	UJA	ASME Class 2[2]
30JNG10/20/30/40 BR005	Piping between Containment Penetrations (30JMK10 BQ101, 30JMK20 BQ201, 30JMK30 BQ301, and 30JMK40 BQ401) and LHSI 2nd RCPB Isolation Valves	S	B	I	Yes	UJA	ASME Class 2[2]
30JNG15/25/35/45 BR009	Piping between Dead Leg Pressurization Valve and Dead Leg Bypass Isolation Line	S	B	I	Yes	UJA	ASME Class 2[2]

Table 3.2.2-1—Classification Summary
Sheet 32 of 185

KKS System or Component Code	SSC Description	Safety Classification (Note 15)	Quality Group Classification	Seismic Category (Note 16)	10 CFR 50 Appendix B Program (Note 5)	Location (Note 17)	Comments/ Commercial Code
30JNG10/20/30/40 BR304	Piping between Discharge of LHSI Pump and LHSI Pump Downstream Pressure Indicator (Local) Root Valve	S	B	I	Yes	UJH	ASME Class 2[2]
30JNG10/20/30/40 BR003	Piping between Flange at Suction of LHSI Pump and LHSI Heat Exchanger	S	B	I	Yes	UJH	ASME Class 2[2]
30JNG12/22/32/42 BR309	Piping between Hot Leg Injection Line and Inlet of Hot Leg Injection Flowrate Sensor Root Valve	S	B	I	Yes	UJH	ASME Class 2[2]
30JNG12/22/32/42 BR308	Piping between Hot Leg Injection Line and Outlet of Hot Leg Injection Flowrate Sensor Root Valve	S	B	I	Yes	UJH	ASME Class 2[2]
30JNG13/23/33/43 BR001	Piping between Inlet of Accumulator Check Valve and Accumulator	S	B	I	Yes	UJA	ASME Class 2[2]

Table 3.2.2-1—Classification Summary
Sheet 33 of 185

KKS System or Component Code	SSC Description	Safety Classification (Note 15)	Quality Group Classification	Seismic Category (Note 16)	10 CFR 50 Appendix B Program (Note 5)	Location (Note 17)	Comments/ Commercial Code
30JNG15/25/35/45 BR001	Piping between Inlet of Dead Leg Pressurization Valve and Cold Leg Injection Line	S	A	I	Yes	UJA	ASME Class 1[1]
30JNG10/20/30/40 BR001	Piping between IRWSTS Three-Way Isolation Valve, LHSI Suction Isolation Line and SAHRS-IRWSTS 1st Isolation Valve	S	B	I	Yes	UJH	ASME Class 2[2]
30JNG10/20/30/40 BR006	Piping between LHSI Discharge Line and LHSI Tangential Miniflow Line Check Valve	S	B	I	Yes	UJA	ASME Class 2[2]
30JNK10/11 BR194/ 196	Piping between LHSI Discharge Line Safety Relief Valve and IRWSTS	S	B	I	Yes	UJA	ASME Class 2[2]
30JNG10/20/30/40 BR192	Piping between LHSI Discharge Line Safety Relief Valve and LHSI Tangential Miniflow Line	S	B	I	Yes	UJA	ASME Class 2[2]

Table 3.2.2-1—Classification Summary
Sheet 34 of 185

KKS System or Component Code	SSC Description	Safety Classification (Note 15)	Quality Group Classification	Seismic Category (Note 16)	10 CFR 50 Appendix B Program (Note 5)	Location (Note 17)	Comments/ Commercial Code
30JNG10/20/30/40 BR403/503	Piping between LHSI Heat Exchanger and KT System Floor Drain 1 Valve	S	B	I	Yes	UJH	ASME Class 2[2]
30JNG10/20/30/40 BR501	Piping between LHSI Heat Exchanger and KT System Process Drain Valve	S	B	I	Yes	UJH	ASME Class 2[2]
30JNG10/20/30/40 BR401	Piping between LHSI Heat Exchanger and KT System Valves for Primary Effluent Isolation Valve	S	B	I	Yes	UJH	ASME Class 2[2]
30JNG10/20/30/40 BR602	Piping between LHSI Heat Exchanger and Nuclear Sampling System Isolation Valve	S	B	I	Yes	UJH	ASME Class 2[2]
30JNG10/20/30/40 BR406	Piping between LHSI Heat Exchanger Downstream Line and Isolation Valve for Primary Effluents	S	B	I	Yes	UJH	ASME Class 2[2]

Table 3.2.2-1—Classification Summary
Sheet 35 of 185

KKS System or Component Code	SSC Description	Safety Classification (Note 15)	Quality Group Classification	Seismic Category (Note 16)	10 CFR 50 Appendix B Program (Note 5)	Location (Note 17)	Comments/ Commercial Code
30JNG10/20/30/40 BR601	Piping between LHSI Heat Exchanger Downstream Line and KU System Valve for Active Liquid Samples	S	B	I	Yes	UJH	ASME Class 2[2]
30JNG10/20/30/40 BR603	Piping between LHSI Heat Exchanger Vent and Drain Line and KU System Valve for the Sampling Line	S	B	I	Yes	UJH	ASME Class 2[2]
30JNG10/20/30/40 BR004	Piping between LHSI Heat Exchangers and Containment Penetrations (30JMK10 BQ101, 30JMK20 BQ201, 30JMK30 BQ301, and 30JMK40 BQ401)	S	B	I	Yes	UJH	ASME Class 2[2]
30JNG12/22/32/42 BR001	Piping between LHSI Hot Leg Injection Isolation Valve and LHSI Pump Discharge Line	S	B	I	Yes	UJH	ASME Class 2[2]

Table 3.2.2-1—Classification Summary
Sheet 36 of 185

KKS System or Component Code	SSC Description	Safety Classification (Note 15)	Quality Group Classification	Seismic Category (Note 16)	10 CFR 50 Appendix B Program (Note 5)	Location (Note 17)	Comments/ Commercial Code
30JNG12/22/32/42 BR002	Piping between LHSI Hot Leg Injection Isolation Valve and RHR Suction Line	S	B	I	Yes	UJH	ASME Class 2[2]
30JNG10/20/30/40 BR306	Piping between LHSI Pump Discharge Line and Inlet to RHR Flowrate Sensor Root Valve	S	B	I	Yes	UJH	ASME Class 2[2]
30JNG10/20/30/40 BR405	Piping between LHSI Pump Discharge Line and KT System Valve for Process Drains	S	B	I	Yes	UJH	ASME Class 2[2]
30JNG10/20/30/40 BR305	Piping between LHSI Pump Discharge Line and LHSI Pump Downstream Pressure Sensor Root Valve	S	B	I	Yes	UJH	ASME Class 2[2]
30JNG10/20/30/40 BR307	Piping between LHSI Pump Discharge Line and Outlet of RHR Flowrate Sensor Root Valve	S	B	I	Yes	UJH	ASME Class 2[2]

Table 3.2.2-1—Classification Summary
Sheet 37 of 185

KKS System or Component Code	SSC Description	Safety Classification (Note 15)	Quality Group Classification	Seismic Category (Note 16)	10 CFR 50 Appendix B Program (Note 5)	Location (Note 17)	Comments/ Commercial Code
30JNK10 BR018/028/038/048	Piping between LHSI Radial Miniflow Line Check Valve and Radial Miniflow IRWSTS Line	S	B	I	Yes	UJA	ASME Class 2[2]
30JNG10/20/30/40 BR002	Piping between LHSI Suction Isolation Valve and Flange at Suction on LHSI Pump	S	B	I	Yes	UJH	ASME Class 2[2]
30JNG40 BR007	Piping between LHSI Suction Line and SAHRS-IRWSTS 1st Isolation Valve	S	B	I	Yes	UJH	ASME Class 2[2]
30JNG10/20/30/40 BR009	Piping between LHSI Tangential Miniflow Line and LHSI Radial Miniflow Line Check Valve	S	B	I	Yes	UJA	ASME Class 2[2]
30JNK10/11 BR022/023	Piping between LHSI Tangential Miniflow Line Check Valve and Tangential Miniflow IRWSTS Line	S	B	I	Yes	UJA	ASME Class 2[2]

Table 3.2.2-1—Classification Summary
Sheet 38 of 185

KKS System or Component Code	SSC Description	Safety Classification (Note 15)	Quality Group Classification	Seismic Category (Note 16)	10 CFR 50 Appendix B Program (Note 5)	Location (Note 17)	Comments/ Commercial Code
30JNK10/~~20/30/40~~11 BR098 and BR099	Piping between MHSI Large and Small Miniflow Lines to the MHSI Miniflow Line Header going to IRWSTS	S	B	I	Yes	UJA	ASME Class 2[2]
30JNG13/23/33/43 BR003	Piping between MHSI Small Miniflow Line and Accumulator Filling Line Isolation Valve	S	B	I	Yes	UJA	ASME Class 2[2]
30JNG15/25/35/45 BR005	Piping between Outlet of Dead Leg Pressure Control Bypass Isolation Valve and CVCS Letdown Function Header	S	B	I	Yes	UJA	ASME Class 2[2]
30JNG15/25/35/45 BR003	Piping between RCS Suction Line Pressurization Valve Outlet and Dead Leg Pressure Bypass Isolation Valve	S	B	I	Yes	UJA	ASME Class 2[2]

Table 3.2.2-1—Classification Summary
Sheet 39 of 185

KKS System or Component Code	SSC Description	Safety Classification (Note 15)	Quality Group Classification	Seismic Category (Note 16)	10 CFR 50 Appendix B Program (Note 5)	Location (Note 17)	Comments/ Commercial Code
30JNG15/25/35/45 BR008	Piping between RHR Suction Line and Dead Leg Pressure Control Isolation Valve	S	B	I	Yes	UJA	ASME Class 2[2]
30JNG15/25/35/45 BR007	Piping between RHR Suction Line and Inlet of Dead Leg Pressure Control Isolation Valve	S	A	I	Yes	UJA	ASME Class 1[1]
30JNG15/25/35/45 BR002	Piping between RHR Suction Line and Inlet of RCS Suction Line Pressurization Valve	S	A	I	Yes	UJA	ASME Class 1[1]
30JNG10/20/30/40 BR301	Piping between Suction of LHSI Pump Line and LHSI Pump Upstream Pressure Indicator (Local) Root Valve	S	B	I	Yes	UJH	ASME Class 2[2]
30JNG15/25/35/45 AA002	RCS Suction Line Pressurization Valve	S	A	I	Yes	UJA	ASME Class 1[1]
30JNG40 AA007	SAHRS-IRWSTS 1st Isolation Valve	S	B	I	Yes	UJH	ASME Class 2[2]

Table 3.2.2-1—Classification Summary
Sheet 40 of 185

KKS System or Component Code	SSC Description	Safety Classification (Note 15)	Quality Group Classification	Seismic Category (Note 16)	10 CFR 50 Appendix B Program (Note 5)	Location (Note 17)	Comments/ Commercial Code
30JNG40 AA008	SAHRS-IRWSTS 2nd Isolation Valve	S	B	I	Yes	UJH	ASME Class 2[2]
30JNG13/23/33/43 AA005	SIS 1st RCPB Isolation Valve	S	A	I	Yes	UJA	ASME Class 1[1]
30JNG13/23/33/43 BB001	SIS Accumulator	S	B	I	Yes	UJA	ASME Class 2[2]
JNK	**In-Containment Refueling Water Storage Tank System**						
JNK	All incoming Piping and Valves to the IRWST from the Safety Injection System	S	B	I	Yes	UJA, UJH	ASME Class 2[2]
JNK	Back-flushing for SIS strainers: Piping and Valves from FAL (ILCO) to the IRWST	NS-AQ	D	II	Yes	UJA	ANSI/ASME B31.1[6]; Penetrates IRWST boundary
JNK	CVCS/FPPS Suction Line: Piping and Valves from IRWST to 30JNK10 AA013	S	B	I	Yes	UJA, UJH	ASME Class 2[2]
30JNK10 AT003	CVCS/FPPS Sump Strainer	NS-AQ	N/A	II	Yes	UJA	ANSI/AISC N690-1994(R2004)s2 [13]

Table 3.2.2-1—Classification Summary
Sheet 41 of 185

KKS System or Component Code	SSC Description	Safety Classification (Note 15)	Quality Group Classification	Seismic Category (Note 16)	10 CFR 50 Appendix B Program (Note 5)	Location (Note 17)	Comments/ Commercial Code
JNK	FPPS supply: Piping and Valve from FAL (30FAL16 AA102) to the IRWST	NS-AQ	D	II	Yes	UJA	ANSI/ASME B31.1[6]; Penetrates IRWST boundary
30JNK11 AA009	IRWST Isolation Valve for SAHRS	S	B	I	Yes	UJH	ASME Class 2[2]
30JNK10 AA009/013	IRWST Isolation Valves for CVCS and FPPS	S	B	I	Yes	UJH	ASME Class 2[2]
30JNK10/11 AT004/ 005	IRWST Retaining Baskets	S	N/A	I	Yes	UJA	ANSI/AISC N690-1994(R2004)s2 [13]
30JNK00 BB001	IRWST Tank	S	N/A	I	Yes	UJA	ACI 349R
30JNK10/20/30/40 AA001	IRWST Three-way Isolation Valves for SIS	S	B	I	Yes	UJH	ASME Class 2[2]
JNK	RCDT Overpressure Protection Line: Piping Downstream of RCDT to IRWST	S	C	I	Yes	UJA	ASME Class 3[3]
JNK	Reactor Building cavities Draining: Piping from FAL (30FAL16 AA003) to the IRWST	NS-AQ	D	II	Yes	UJA	ANSI/ASME B31.1[6]; Penetrates IRWST boundary

Table 3.2.2-1—Classification Summary
Sheet 42 of 185

KKS System or Component Code	SSC Description	Safety Classification (Note 15)	Quality Group Classification	Seismic Category (Note 16)	10 CFR 50 Appendix B Program (Note 5)	Location (Note 17)	Comments/ Commercial Code
JNK	Reactor Building cavities overflow: Piping from FAL (30FAL10 AA411) to the IRWST	NS-AQ	D	II	Yes	UJA	ANSI/ASME B31.1[6]; Penetrates IRWST boundary
JNK	SAHRS Suction Line: Piping and Valve from IRWST to 30JNK11 AA009	S	B	I	Yes	UJA, UJH	ASME Class 2[2]
30JNK11 AT003	SAHRS Sump Strainer	NS-AQ	N/A	II	Yes	UJA	ANSI/AISC N690-1994(R2004)s2 [13]
30JNK10/11 AA004-007	SIS Strainer Back-flush Isolation Valves	NS-AQ	D	II	Yes	UJA	ANSI/ASME B31.1[6]
JNK	SIS Suction Lines: Piping and Valve from IRWST to Valves 30JNK10/20/30/40 AA001	S	B	I	Yes	UJA, UJH	ASME Class 2[2]
30JNK10/11 AT001/002	SIS Sump Strainers	S	N/A	I	Yes	UJA	ANSI/AISC N690-1994(R2004)s2 [13]
30JNK10/11 AT014/015	Trash Racks (IRWST Heavy Floor Opening)	S	N/A	I	Yes	UJA	ANSI/AISC N690-1994(R2004)s2 [13]

Table 3.2.2-1—Classification Summary
Sheet 43 of 185

KKS System or Component Code	SSC Description	Safety Classification (Note 15)	Quality Group Classification	Seismic Category (Note 16)	10 CFR 50 Appendix B Program (Note 5)	Location (Note 17)	Comments/ Commercial Code
30JNK10/11 AT024/ 025	TSP Baskets	S	N/A	I	Yes	UJA	ANSI/AISC N690-1994(R2004)s2 [13]
LAR, LAS	**Emergency Feedwater System**						
30LAR11/21/31/41 AA007	Containment Isolation Check Valves	S	B	I	Yes	UJA	ASME Class 2[2]
30LAR14/24/34/44 AA001	Discharge Cross Connect Valves	S	C	I	Yes	UJH	ASME Class 3[3]
LAR	Discharge Header Piping and Valves	S	C	I	Yes	UJH	ASME Class 3[3]
30LAR04 AA001	DWDS Isolation Valve	S	C	I	Yes	4UJH	ASME Class 3[3]
30LAS11/21/31/41 AP001	EFW Pumps	S	C	I	Yes	UJH	ASME Class 3[3]
30LAR10/20/30/40 BB001	EFW Storage Pools	S	N/A	I	Yes	UJH	ACI 349R
30LAR11/21/31/41 AA103	Flow Control Valves	S	C	I	Yes	UJH	ASME Class 3[3]
30LAR11/21/31/41 AA002	Min Flow Check Valves	S	C	I	Yes	UJH	ASME Class 3[3]
LAR	Piping and Valves from EFW Pools to EFW Pumps	S	C	I	Yes	UJH	ASME Class 3[3]

Table 3.2.2-1—Classification Summary
Sheet 44 of 185

KKS System or Component Code	SSC Description	Safety Classification (Note 15)	Quality Group Classification	Seismic Category (Note 16)	10 CFR 50 Appendix B Program (Note 5)	Location (Note 17)	Comments/ Commercial Code
LAR	Piping and Valves from EFW Pumps to Steam Generator Isolation Valves	S	C	I	Yes	UJH	ASME Class 3[3]
LAR	Piping and Valves from Steam Generator Isolation Valves to SGs	S	B	I	Yes	UJA, UJH	ASME Class 2[2]
30LAR11/21/31/41 AA006	Steam Generator Isolation Valves	S	B	I	Yes	UJH	ASME Class 2[2]
30LAR11/21/31/41 AA105	Steam Generator Level Control Valves	S	C	I	Yes	UJH	ASME Class 3[3]
LAR	Storage Pool Overflow and Drain Piping	NS	E	NSC	No	UJH	ANSI/ASME B31.1[6]
30LAR13/23/33/43 AA001	Supply Cross Connect Valves	S	C	I	Yes	UJH	ASME Class 3[3]
LAR	Supply Header Piping and Valves	S	C	I	Yes	UJH	ASME Class 3[3]
JDH	**Extra Borating System**						
JDH10/20/30/40	Discharge Piping Downstream of & including the RCS Isolation Valve	S	A	I	Yes	UJA	ASME Class 1[1]

Table 3.2.2-1—Classification Summary
Sheet 45 of 185

KKS System or Component Code	SSC Description	Safety Classification (Note 15)	Quality Group Classification	Seismic Category (Note 16)	10 CFR 50 Appendix B Program (Note 5)	Location (Note 17)	Comments/ Commercial Code
JDH10/40	Discharge Piping, Valve, & Flow Meter Upstream of & including the Outside Containment Isolation Valve	S	B	I	Yes	UFA	ASME Class 2[2]
JDH10/20/30/40	Discharge Piping, Valves, & Flow Meters Downstream of the Outside Containment Isolation Valve up to the RCS Isolation Valve	S	B	I	Yes	UJA	ASME Class 2[2]
30JDH10 BR054	Hydrotest Line	NS	E	NSC	No	UFA	ANSI/ASME B31.1[6]
30JDH10 AA054	Hydrotest Line Isolation Valve	NS-AQ	D	NSC	Yes	UFA	ANSI/ASME B31.1[6]
JDH10	Hydrotest Line Piping & Valves Upstream of & including JDH10 AA053	S	B	I	Yes	UFA	ASME Class 2[2]
30JDH10 BR021	IRWST Suction Line	NS	D	NSC	No	UFA	ANSI/ASME B31.1[6]
30JDH10 AA021	IRWST Suction Line Isolation Valve	NS-AQ	D	NSC	Yes	UFA	ANSI/ASME B31.1[6]

Table 3.2.2-1—Classification Summary
Sheet 46 of 185

KKS System or Component Code	SSC Description	Safety Classification (Note 15)	Quality Group Classification	Seismic Category (Note 16)	10 CFR 50 Appendix B Program (Note 5)	Location (Note 17)	Comments/ Commercial Code
JDH10/40 AP001	Pump	S	B	I	Yes	UFA	ASME Class 2[2]
JDH10/40	Safety Relief Line Piping & Valve	S	B	I	Yes	UFA	ASME Class 2[2]
JDH10/40	Suction Line Piping & Valves including the Interconnect	S	B	I	Yes	UFA	ASME Class 2[2]
JDH10	Suction Line Piping from the VCT & IRWST Downstream of and Including JDH10 AA052 and JDH10 AA022	S	B	I	Yes	UFA	ASME Class 2[2]
JDH10/40 BB001	Tank	S	B	I	Yes	UFA	ASME Class 2[2]
JDH10/40	Tank Drain Line Piping & Valve	S	B	I	Yes	UFA	ASME Class 2[2]
JDH10/40	Tank Level Measurement Piping	S	B	I	Yes	UFA	ASME Class 2[2]
JDH10/40	Tank Refill Line Piping Downstream of & including the Check Valve	S	B	I	Yes	UFA	ASME Class 2[2]
JDH10/40	Tank Refill Line Piping Upstream of the JDH10/40 AA012	NS	D	NSC	No	UFA	ANSI/ASME B31.1[6]

Table 3.2.2-1—Classification Summary
Sheet 47 of 185

KKS System or Component Code	SSC Description	Safety Classification (Note 15)	Quality Group Classification	Seismic Category (Note 16)	10 CFR 50 Appendix B Program (Note 5)	Location (Note 17)	Comments/ Commercial Code
JDH10/40	Test Line Piping, Valves, & Flow Restrictor	S	B	I	Yes	UFA	ASME Class 2[2]
30JDH10 BR051	VCT Suction Line	NS	E	NSC	No	UFA	ANSI/ASME B31.1[6]
30JDH10 AA051	VCT Suction Line Isolation Valve	NS-AQ	D	NSC	Yes	UFA	ANSI/ASME B31.1[6]
JMT	**Combustible Gas Control System**						
JMT20	Convection Foils	S	B	I	Yes	UJA	ASME AG-1[14], ASME Section VIII[8]
JMT20	Hydrogen Mixing Damper	S	B	I	Yes	UJA	ASME AG-1[14]
JMT10	Passive Autocatalytic Recombiner	NS-AQ	B	II	Yes	UJA	ASME AG-1[14]
JMT20	Rupture Foils	S	B	I	Yes	UJA	ASME AG-1[14], ASME Section VIII[8]
JMQ	**Severe Accident Heat Removal System**						
30JMQ40AA001 and 30JMQ~~40/~~41/42/43 AA001/002	Containment Isolation Valves (including penetrations and associated piping)	S	B	I	Yes	UJH	ASME Class 2[2]

Table 3.2.2-1—Classification Summary
Sheet 48 of 185

KKS System or Component Code	SSC Description	Safety Classification (Note 15)	Quality Group Classification	Seismic Category (Note 16)	10 CFR 50 Appendix B Program (Note 5)	Location (Note 17)	Comments/ Commercial Code
30JMQ42 BR005/007	Passive Flooding line up to and including MOV (JMQ42 AA004/006)	S	B	I	Yes	UJA	ASME Class 2[2]
30JMQ41 BR004	Piping - Spray Header and Nozzles	NS-AQ	D	II	Yes	UJA	ANSI/ASME B31.1[6]; Located above safety-related piping and equipment
30JMQ40/41/42/43	Piping and associated equipment in Safeguards Building (excluding piping from containment isolation valve to penetration)	NS	D	NSC	No	UJH	ANSI/ASME B31.1[6]
30JMQ41/43	Piping and associated equipment inside Containment	NS-AQ	D	II	Yes	UJA	ANSI/ASME B31.1[6]; Located in close proximity to safety-related piping and equipment
30JMQ42	Piping and associated equipment inside Containment (except Passive Flooding Line)	NS-AQ	D	II	Yes	UJA	ANSI/ASME B31.1[6]; Located in close proximity to safety-related piping and equipment

Table 3.2.2-1—Classification Summary
Sheet 49 of 185

KKS System or Component Code	SSC Description	Safety Classification (Note 15)	Quality Group Classification	Seismic Category (Note 16)	10 CFR 50 Appendix B Program (Note 5)	Location (Note 17)	Comments/ Commercial Code
~~30JMQ41/42/43~~	~~Piping in Safeguards Building~~	~~NS-AQ~~	~~D~~	~~II~~	~~Yes~~	~~UJH~~	~~ANSI/ASME B31.16; Located in close proximity to safety related piping and equipment~~
30JMQ40 AC001	SAHRS Heat Exchanger (Shell 1)	NS	D	NSC	No	UJH	ASME VIII[8]
30JMQ40 AC004	SAHRS Heat Exchanger (Shell 2)	NS	D	NSC	No	UJH	ASME VIII[8]
30JMQ40 AP001	SAHRS Pump	NS	D	NSC	No	UJH	Manufacturer Standards
JMB	**Core Melt Stabilization System**						
JMB40 AC	Cooling Structure	NS	E	NSC	No	UJA	
JMB20 AB001	Gate	NS	E	NSC	No	UJA	
JMB30	Melt Discharge Channel	NS-AQ	E	II	Yes	UJA	Helps support the structural integrity of reactor pit
JMB30 BU001	Melt Discharge Channel - Refractory Layer	NS	E	NSC	No	UJA	
JMB20	Melt Plug – Sacrificial Concrete	NS	E	NSC	No	UJA	
JMB10	Reactor Cavity – Sacrificial Concrete	NS	E	NSC	No	UJA	

Table 3.2.2-1—Classification Summary
Sheet 50 of 185

KKS System or Component Code	SSC Description	Safety Classification (Note 15)	Quality Group Classification	Seismic Category (Note 16)	10 CFR 50 Appendix B Program (Note 5)	Location (Note 17)	Comments/ Commercial Code
JMB10 BU001	Refractory Layer: Reactor Cavity, Melt Discharge Channel	NS	E	NSC	No	UJA	
JMB40	Spreading Area – Sacrificial Concrete	NS	E	NSC	No	UJA	
NUCLEAR FUEL SYSTEM							
N/A	Nuclear Fuel	S	N/A	I	Yes	UJA, UFA	
NSSS SUPPORT SYSTEMS							
FAK, FAL	**Fuel Pool Cooling & Purification System**						
FAL	Balance of FAL Piping	NS	D	NSC	No	UFA	ANSI/ASME B31.1[6]
FAL	Containment Isolation Pressure Boundary Piping	S	B	I	Yes	UJA, UFA	ASME Class 2[2]
30FAK10/20 AA001	FPC Control Valves	S	C	I	Yes	UFA	ASME Class 3[3]
30FAK10/20 AC001	FPC Heat Exchangers	S	C	I	Yes	UFA	ASME Class 3[3]
30FAK11/12/21/22 AP001	FPC Pumps	S	C	I	Yes	UFA	ASME Class 3[3]
30FAK10/20 AA601	FPC Sampling Isolation Valves	S	C	I	Yes	UFA	ASME Class 3[3]
30FAL23 AT002	FPP Ion Exchanger	NS	D	NSC	No	UKA	ASME VIII[8]
30FAL23 AT003	FPP Post Filter	NS	D	NSC	No	UKA	ASME VIII[8]

Table 3.2.2-1—Classification Summary
Sheet 51 of 185

KKS System or Component Code	SSC Description	Safety Classification (Note 15)	Quality Group Classification	Seismic Category (Note 16)	10 CFR 50 Appendix B Program (Note 5)	Location (Note 17)	Comments/ Commercial Code
30FAL23 AT001	FPP Pre-Filter	NS	D	NSC	No	UKA	ASME VIII[8]
30FAL29 AT001	FPP Resin Sieve	NS	D	NSC	No	UKA	ASME VIII[8]
30FAL22 AP001	Fuel Building Purification Pump	NS	D	NSC	No	UFA	ASME VIII[8]
30FAL21 AT001	Fuel Building Skimmer Filter	NS	D	NSC	No	UKA	ASME VIII[8]
30FAL21 AP001	Fuel Building Skimming Pump	NS	D	NSC	No	UFA	ASME VIII[8]
30FAL10 AA003	ILCO Outlet Isolation Valve	S	C	I	Yes	UJA	ASME Class 3[3]
FAK	Piping and Valves between Spent Fuel Pool and FPC Pumps	S	C	I	Yes	UFA	ASME Class 3[3]
FAL	Piping and Valves from bottom of Fuel Building Pool Compartments to Valves 30FAL20 AA004 and 30FAL30 AA001	S	C	I	Yes	UFA	ASME Class 3[3]

Table 3.2.2-1—Classification Summary
Sheet 52 of 185

KKS System or Component Code	SSC Description	Safety Classification (Note 15)	Quality Group Classification	Seismic Category (Note 16)	10 CFR 50 Appendix B Program (Note 5)	Location (Note 17)	Comments/ Commercial Code
FAL	Piping and Valves from bottom of Reactor Building Pool Compartments to Valves 30FAL12 AA001 and 30FAL16 AA003	S	C	I	Yes	UJA	ASME Class 3[3]
30FAL12 AA001	Reactor Building Purification Containment Isolation Valve (Inner)	S	B	I	Yes	UJA	ASME Class 2[2]
30FAL12/15 AA002	Reactor Building Purification Containment Isolation Valves (Outer)	S	B	I	Yes	UFA	ASME Class 2[2]
30FAL12 AP001	Reactor Building Purification Pump	NS	D	NSC	No	UFA	ASME VIII[8]
30FAL11 AP001	Reactor Building Skimming Pump	NS	D	NSC	No	UJA	ASME VIII[8]
30FAL02 AP001	Spent Fuel Pool Makeup Pump	S	C	I	Yes	UFA	ASME Class 3[3]
FAL	Spent Fuel Pool Makeup Pump Piping	S	C	I	Yes	UFA	ASME Class 3[3]

Table 3.2.2-1—Classification Summary
Sheet 53 of 185

KKS System or Component Code	SSC Description	Safety Classification (Note 15)	Quality Group Classification	Seismic Category (Note 16)	10 CFR 50 Appendix B Program (Note 5)	Location (Note 17)	Comments/ Commercial Code
KBA, KBD	**Chemical & Volume Control System**						
30KBA20 AA104	3-Way Control Valve to KBB	NS-AQ	D	NSC	Yes	UFA	ANSI/ASME B31.1[6]
30KBA20 AA001	3-Way Valve to KBE	NS-AQ	D	NSC	Yes	UFA	ANSI/ASME B31.1[6]
30KBA20 AA002	3-Way Valve to KBG	NS-AQ	D	NSC	Yes	UFA	ANSI/ASME B31.1[6]
30KBA35 AA101	3-Way Valve to Pressurizer Spray	S	C	I	Yes	UJA	ASME Class 3[3]
KBD	All System Piping to Check Valve KBD11 AA016	NS	E	NSC	No	UFA	ANSI/ASME B31.1[6]
30KBA14 AA107	Back-Pressure Control Valve	NS-AQ	D	NSC	Yes	UFA	ANSI/ASME B31.1[6]
30KBA34 AA101	Charging Header Flow Control Valve	NS-AQ	D	NSC	Yes	UFA	ANSI/ASME B31.1[6]
30KBA34 AA003	Charging Line Containment Isolation Check Valve	S	B	I	Yes	UJA	ASME Class 2[2]
30KBA34 AA002	Charging Line Containment Isolation Valve	S	B	I	Yes	UFA	ASME Class 2[2]
30KBA34 AA012	Charging Line Isolation Valve	S	C	I	Yes	UJA	ASME Class 3[3]

Table 3.2.2-1—Classification Summary
Sheet 54 of 185

KKS System or Component Code	SSC Description	Safety Classification (Note 15)	Quality Group Classification	Seismic Category (Note 16)	10 CFR 50 Appendix B Program (Note 5)	Location (Note 17)	Comments/ Commercial Code
30KBA34 AA191	Charging Line Relief Valve	S	C	I	Yes	UJA	ASME Class 3[3]
KBA	Charging Piping from Check Valve KBA34 AA003 to Charging Line Loop Check Valves KBA34 AA018 & KBA34 AA019 and Pressurizer Auxiliary Spray Check Valve KBA35 AA002	S	C	I	Yes	UJA	ASME Class 3[3]
KBA	Charging Piping from Containment Isolation Valve KBA34 AA002 to Check Valve KBA34 AA003	S	B	I	Yes	UJA, UFA	ASME Class 2[2]
KBA	Charging Piping from Loop Check Valves KBA34 AA018 & KBA34 AA019 and Pressurizer Auxiliary Spray Check Valve KBA35 AA002 to RCS and Pressurizer	S	A	I	Yes	UJA	ASME Class 1[1]

Table 3.2.2-1—Classification Summary
Sheet 55 of 185

KKS System or Component Code	SSC Description	Safety Classification (Note 15)	Quality Group Classification	Seismic Category (Note 16)	10 CFR 50 Appendix B Program (Note 5)	Location (Note 17)	Comments/ Commercial Code
30KBA31/32 AA005	Charging Pump Minimum Flow Valves	NS-AQ	D	NSC	Yes	UFA	ANSI/ASME B31.1[6]
KBA	Charging Pump Suction and Discharge Piping from KBA21 AA009 to Containment Isolation KBA34 AA002	NS-AQ	D	NSC	Yes	UFA	ANSI/ASME B31.1[6]
30KBA31/32 AA191	Charging Pump Suction Relief Valves	NS-AQ	D	NSC	Yes	UFA	ASME VIII[8]
30KBA31/32 AP001	Charging Pumps	NS-AQ	D	NSC	Yes	UFA	Manufacturer Standards
30KBD11 AP001-003	Chemical Proportioning Pumps	NS	E	NSC	No	UFA	Manufacturer Standards
30KBA14 AA002/003	Containment Isolation Valves	S	B	I	Yes	UJA	ASME Class 2[2]
30KBA25 BT001	Gas Separator	NS-AQ	D	NSC	Yes	UFA	ASME VIII[8]
30KBA11/12 AA001	HP Cooler Inlet Valves	S	C	I	Yes	UJA	ASME Class 3[3]
30KBA11/12 AA003	HP Cooler Outlet Valves	S	C	I	Yes	UJA	ASME Class 3[3]
30KBA11/12 AC001	HP Coolers	S	C	I	Yes	UJA	ASME Class 3[3]

Table 3.2.2-1—Classification Summary
Sheet 56 of 185

KKS System or Component Code	SSC Description	Safety Classification (Note 15)	Quality Group Classification	Seismic Category (Note 16)	10 CFR 50 Appendix B Program (Note 5)	Location (Note 17)	Comments/ Commercial Code
30KBA11/12 AA102	HP Reducing Stations	S	C	I	Yes	UJA	ASME Class 3[3]
30KBA25 AA101	Hydrogen Control Valve to Hydrogenation Station	NS-AQ	D	NSC	Yes	UFA	ANSI/ASME B31.1[6]
30KBA25 AA006	Hydrogen Gas Isolation Valve to Hydrogenation Station	NS-AQ	D	NSC	Yes	UFA	ANSI/ASME B31.1[6]
30KBA31 AA013	Isolation Valve from IRWST	NS-AQ	D	NSC	Yes	UFA	ASME VIII[8]
30KBA20 AA601	Isolation Valve to KUA	NS-AQ	D	NSC	Yes	UFA	ANSI/ASME B31.1[6]
30KBA14 AA009/ 011	Isolation Valves to KTA	S	C	I	Yes	UJA	ASME Class 3[3]
30KBA14 AA191	Letdown Line Relief Valve	S	C	I	Yes	UJA	ASME Class 3[3]
30KBA14 AA192	Letdown Line Relief Valve	NS-AQ	D	NSC	Yes	UFA	ANSI/ASME B31.1[6]
30KBA20 AA191	Letdown Line Relief Valve	NS-AQ	D	NSC	Yes	UKA	ANSI/ASME B31.1[6]
30KBA25 AA191	Letdown Line Relief Valve	NS-AQ	D	NSC	Yes	UFA	ANSI/ASME B31.1[6]

Table 3.2.2-1—Classification Summary
Sheet 57 of 185

KKS System or Component Code	SSC Description	Safety Classification (Note 15)	Quality Group Classification	Seismic Category (Note 16)	10 CFR 50 Appendix B Program (Note 5)	Location (Note 17)	Comments/ Commercial Code
KBA	Letdown Piping from Inside Containment Isolation Valve to Downstream of Outside Containment Isolation Valve KBA14 AA003	S	B	I	Yes	UJA, UFA	ASME Class 2[2]
KBA	Letdown Piping from RCS to Downstream of Valve KBA10 AA002	S	A	I	Yes	UJA	ASME Class 1[1]
KBA	Letdown Piping from Valve KBA10 AA002 to Inside Containment Isolation Valve KBA14 AA002	S	C	I	Yes	UJA	ASME Class 3[3]

Table 3.2.2-1—Classification Summary
Sheet 58 of 185

KKS System or Component Code	SSC Description	Safety Classification (Note 15)	Quality Group Classification	Seismic Category (Note 16)	10 CFR 50 Appendix B Program (Note 5)	Location (Note 17)	Comments/ Commercial Code
KBA	Letdown Piping from Valve KBA14 AA004 and Outside Containment Isolation Valve KBA14 AA003 to Valves KBA21 AA001 KBA21 AA009 and KBA25 AA017	NS-AQ	D	NSC	Yes	UFA	ANSI/ASME B31.1[6]
30KBD11 BB001	Lithium Hydroxide Injection Tank	NS	E	NSC	No	UFA	API 650[11]
30KBD11 BB002	Lithium Hydroxide Preparation Tank	NS	E	NSC	No	UFA	API 650[11]
KBA	Low Pressure Letdown Piping in Fuel building from JNX to Downstream of Valve KBA14 AA004	S	C	I	Yes	UFA	ASME Class 3[3]
30KBA14 AA106	LP Reducing Station	S	C	I	Yes	UFA	ASME Class 3[3]
30KBA14 AA004	LP Reducing Station Isolation Valve	S	C	I	Yes	UFA	ASME Class 3[3]
30KBA31/32 BZ001	Mixing Elements	NS-AQ	D	NSC	Yes	UFA	ASME VIII[8]
30KBA25 BZ001	Mixing Pipe	NS-AQ	D	NSC	Yes	UFA	ASME VIII[8]

Table 3.2.2-1—Classification Summary
Sheet 59 of 185

KKS System or Component Code	SSC Description	Safety Classification (Note 15)	Quality Group Classification	Seismic Category (Note 16)	10 CFR 50 Appendix B Program (Note 5)	Location (Note 17)	Comments/ Commercial Code
30KBA20 AA021	Nitrogen Supply Valve to VCT	NS-AQ	D	NSC	Yes	UFA	ANSI/ASME B31.1[6]
KBD	Piping from Check Valve KBD11 AA016 to Charging Pump Suction Piping	NS-AQ	D	NSC	Yes	UFA	ANSI/ASME B31.1[6]
30KBA35 AA002	Pressurizer Spray Check Valve	S	A	I	Yes	UJA	ASME Class 1[1]
30KBA35 AA001	Pressurizer Spray Isolation Valve	S	C	I	Yes	UJA	ASME Class 3[3]
30KBA25 AA017	Prevent Dilution Valve	S	C	I	Yes	UFA	ASME Class 3[3]
30KBA21 AA001/ 009	Prevent Dilution Valves	S	C	I	Yes	UFA	ASME Class 3[3]
30KBA34 AA018-021	RC Pressure Boundary Check Valves	S	A	I	Yes	UJA	ASME Class 1[1]
30KBA10 AA001/ 002	RC Pressure Boundary Valves	S	A	I	Yes	UJA	ASME Class 1[1]
30JEW01 AT001/002	RCP Seal Injection Filters	NS	D	NSC	No	UKA	ASME VIII[8]
30JEW01 AA101	RCP Seal Injection Flow Control Valve	NS-AQ	D	NSC	Yes	UFA	ANSI/ASME B31.1[6]
30JEW11/21/31/41 AA111	RCP Seal Injection Flow Control Valves	S	C	I	Yes	UJA	ASME Class 3[3]

Table 3.2.2-1—Classification Summary
Sheet 60 of 185

KKS System or Component Code	SSC Description	Safety Classification (Note 15)	Quality Group Classification	Seismic Category (Note 16)	10 CFR 50 Appendix B Program (Note 5)	Location (Note 17)	Comments/ Commercial Code
JEW	RCP Seal Injection from Check Valve JEW01 AA006 to RCPs	S	C	I	Yes	UJA	ASME Class 3[3]
JEW	RCP Seal Injection Piping from Charging Line to Outside Containment Isolation Valve JEW01 AA005	NS-AQ	D	NSC	Yes	UFA, UKA	ANSI/ASME B31.1[6]
JEW	RCP Seal Injection Piping from Containment Isolation Valve to Inside Containment Check Valve JEW01 AA006	S	B	I	Yes	UJA, UFA	ASME Class 2[2]
30JEW50 AA001	RCP Seal Leak-off Containment Isolation Valve	S	B	I	Yes	UJA	ASME Class 2[2]
30JEW50 AA002	RCP Seal Leak-off Containment Isolation Valve	S	B	I	Yes	UFA	ASME Class 2[2]
30JEW50 AT001	RCP Seal Leak-off Filter	NS	D	NSC	No	UKA	ASME VIII[8]

Table 3.2.2-1—Classification Summary
Sheet 61 of 185

KKS System or Component Code	SSC Description	Safety Classification (Note 15)	Quality Group Classification	Seismic Category (Note 16)	10 CFR 50 Appendix B Program (Note 5)	Location (Note 17)	Comments/ Commercial Code
JEW	RCP Seal Leakoff Piping from Inside Containment Isolation Valve JEW50 AA001 to Outside Containment Isolation Valve JEW50 AA002	S	B	I	Yes	UJA, UFA	ASME Class 2[2]
JEW	RCP Seal Leakoff Piping from Outside Containment Isolation Valve to Charging Piping	NS-AQ	D	NSC	Yes	UFA, UKA	ANSI/ASME B31.1[6]
JEW	RCP Seal Leakoff Piping from RCPs to Inside Containment Isolation Valve JEW50 AA001	S	C	I	Yes	UJA	ASME Class 3[3]
30JEW50 AA104	RCP Seal Leak-off Pressure Regulating Valve	NS-AQ	D	NSC	Yes	UFA	ASME VIII[8]
30JEW50 AA191	RCP Seal Leak-off Relief Valve	S	C	I	Yes	UJA	ASME Class 3[3]
30JEW50 AA021	RCP Seal Leak-off to KTA	S	C	I	Yes	UJA	ASME Class 3[3]

Table 3.2.2-1—Classification Summary
Sheet 62 of 185

KKS System or Component Code	SSC Description	Safety Classification (Note 15)	Quality Group Classification	Seismic Category (Note 16)	10 CFR 50 Appendix B Program (Note 5)	Location (Note 17)	Comments/ Commercial Code
30KBA10 AC001	Regenerative Heat Exchanger	S	C	I	Yes	UJA	ASME Class 3[3]
30KBA34 AA007	Regenerative Heater 3-Way Bypass Valve	S	C	I	Yes	UJA	ASME Class 3[3]
30JEW01 AA006	Seal Injection Containment Isolation Check Valve	S	B	I	Yes	UJA	ASME Class 2[2]
30JEW01 AA005	Seal Injection Containment Isolation Valve	S	B	I	Yes	UFA	ASME Class 2[2]
30KBA25 BB001	Stand Pipe	NS-AQ	D	NSC	Yes	UFA	ASME VIII[8]
30KBA20 BB001	Volume Control Tank	NS-AQ	D	NSC	Yes	UFA	ASME VIII[8]
30KBA21 AA191	Volume Control Tank Relief Valve	NS-AQ	D	NSC	Yes	UFA	ANSI/ASME B31.1[6]
30KBA25 BN001	Water Jet Pump	NS-AQ	D	NSC	Yes	UFA	Manufacturer Standards
30KBA25 AA007	Water Jet Pump Inlet Isolation Valve	NS-AQ	D	NSC	Yes	UFA	ANSI/ASME B31.1[6]
FAA, FAB, FAE, FAF, FB, FC	**Fuel Handling System**						
SMF01	Auxiliary Crane	NS-AQ	D	II	Yes	UFA	ANS 57.1-1992, ASME NOG-1

Table 3.2.2-1—Classification Summary
Sheet 63 of 185

KKS System or Component Code	SSC Description	Safety Classification (Note 15)	Quality Group Classification	Seismic Category (Note 16)	10 CFR 50 Appendix B Program (Note 5)	Location (Note 17)	Comments/ Commercial Code
FCD30	Centralized Control Unit (Fuel Building)	NS-AQ	D	II	Yes	UFA	ANS 57.1-1992; Must maintain structural integrity during earthquake
FCB30	Centralized Control Unit (Reactor Building)	NS-AQ	D	II	Yes	UJA	ANS 57.1-1992; Must maintain structural integrity during earthquake
FCJ04	Conveyor Car and Drive	NS-AQ	D	II	Yes	UFA	ANS 57.1-1992; Located in close proximity to safety-related equipment
FCJ06	Emergency Manual Drive System for Conveyor Car	NS-AQ	D	II	Yes	UFA	ANS 57.1-1992; Located in close proximity to safety-related equipment
FCD07	FAs Guide System	NS-AQ	D	II	Yes	UFA	ANS 57.1-1992; Located in close proximity to safety-related equipment
FCJ01	Fuel Transfer Tube Facility (Except FCJ05)	NS-AQ	D	II	Yes	UJA, UFA	ANS 57.1-1992; Located in close proximity to safety-related equipment and must maintain structural integrity

Table 3.2.2-1—Classification Summary
Sheet 64 of 185

KKS System or Component Code	SSC Description	Safety Classification (Note 15)	Quality Group Classification	Seismic Category (Note 16)	10 CFR 50 Appendix B Program (Note 5)	Location (Note 17)	Comments/ Commercial Code
FAA01	New Fuel Storage Racks	S	C	I	Yes	UFA	ANS 57.3-1983
FCD10	NFE (Entire Assembly)	NS-AQ	D	II	Yes	UFA	ANS 57.1-1992; Located in close proximity to safety-related equipment
FCB01	RM (Entire Assembly)	NS-AQ	D	II	Yes	UJA	ANS 57.1-1992; Located in close proximity to safety-related equipment
FCB02	RM Bridge	NS-AQ	D	II	Yes	UJA	ANS 57.1-1992; Located in close proximity to safety-related equipment
FCB05	RM FAIs Hoist	NS-AQ	D	II	Yes	UJA	ANS 57.1-1992; Located in close proximity to safety-related equipment
FCB04	RM FAs Hoist	NS-AQ	D	II	Yes	UJA	ANS 57.1-1992; Located in close proximity to safety-related equipment
FCB08	RM ISH	NS-AQ	D	II	Yes	UJA	ANS 57.1-1992; Located in close proximity to safety-related equipment

Table 3.2.2-1—Classification Summary
Sheet 65 of 185

KKS System or Component Code	SSC Description	Safety Classification (Note 15)	Quality Group Classification	Seismic Category (Note 16)	10 CFR 50 Appendix B Program (Note 5)	Location (Note 17)	Comments/ Commercial Code
FCB07	RM Mast & Gripper (FAIs)	NS-AQ	D	II	Yes	UJA	ANS 57.1-1992; Located in close proximity to safety-related equipment
FCB06	RM Mast & Gripper (FAs)	NS-AQ	D	II	Yes	UJA	ANS 57.1-1992; Located in close proximity to safety-related equipment
FCB03	RM Trolley	NS-AQ	D	II	Yes	UJA	ANS 57.1-1992; Located in close proximity to safety-related equipment
FCD01	SFM (Entire Assembly)	NS-AQ	D	II	Yes	UFA	ANS 57.1-1992; Located in close proximity to safety-related equipment
FCD02	SFM Bridge	NS-AQ	D	II	Yes	UFA	ANS 57.1-1992; Located in close proximity to safety-related equipment
FCD04	SFM Hoist	NS-AQ	D	II	Yes	UFA	ANS 57.1-1992; Located in close proximity to safety-related equipment

Table 3.2.2-1—Classification Summary
Sheet 66 of 185

KKS System or Component Code	SSC Description	Safety Classification (Note 15)	Quality Group Classification	Seismic Category (Note 16)	10 CFR 50 Appendix B Program (Note 5)	Location (Note 17)	Comments/ Commercial Code
FCD05	SFM Mast & Gripper	NS-AQ	D	II	Yes	UFA	ANS 57.1-1992; Located in close proximity to safety-related equipment
FCD06	SFM Tower & Rotation Device	NS-AQ	D	II	Yes	UFA	ANS 57.1-1992; Located in close proximity to safety-related equipment
FCD03	SFM Trolley	NS-AQ	D	II	Yes	UFA	ANS 57.1-1992; Located in close proximity to safety-related equipment
FCJ05	Fuel Transfer Tube - Tube and Blind Flange	S	B	I	Yes	UJA, UFA	ASME Class MC[23]
FCJ05	Fuel Transfer Tube - FB Gate Valve and Expansion Joints	S	C	I	Yes	UJA, UJB, UFA	ASME Class 3[3]
FAB02	Underwater Fuel Racks	S	C	I	Yes	UFA	ANS 57.2-1983
30FAB11 KB001	Transfer Pit Slot Gate	S	N/A	I	Yes	UFA	Manufacturer's standard
30FAB11 KB002	Transfer Pit Swivel Gate	S	N/A	I	Yes	UFA	Manufacturer's standard

Table 3.2.2-1—Classification Summary
Sheet 67 of 185

KKS System or Component Code	SSC Description	Safety Classification (Note 15)	Quality Group Classification	Seismic Category (Note 16)	10 CFR 50 Appendix B Program (Note 5)	Location (Note 17)	Comments/ Commercial Code
30FAB12 KB001	Loading Pit Slot Gate	S	N/A	I	Yes	UFA	Manufacturer's standard
30FAB12 KB002	Loading Pit Swivel Gate	S	N/A	I	Yes	UFA	Manufacturer's standard
FCJ08	Up-Ender and Track (Fuel Building)	NS-AQ	D	II	Yes	UFA	ANS 57.1-1992; Located in close proximity to safety-related equipment
FCJ07	Up-Ender and Track (Reactor Building)	NS-AQ	D	II	Yes	UJA	ANS 57.1-1992; Located in close proximity to safety-related equipment
FCJ03	Up-Ender Hoist (Fuel Building)	NS-AQ	D	II	Yes	UFA	ANS 57.1-1992; Located in close proximity to safety-related equipment
FCJ02	Up-Ender Hoist (Reactor Building)	NS-AQ	D	II	Yes	UJA	ANS 57.1-1992; Located in close proximity to safety-related equipment
FCJ12	Spent Fuel Cask Transfer Facility Penetration including Loading Pit Bottom Cover	S	C	I	Yes	UFA	ANS 57.2-1983

Table 3.2.2-1—Classification Summary
Sheet 68 of 185

KKS System or Component Code	SSC Description	Safety Classification (Note 15)	Quality Group Classification	Seismic Category (Note 16)	10 CFR 50 Appendix B Program (Note 5)	Location (Note 17)	Comments/ Commercial Code
KBB	**Coolant Supply & Storage System**						
30KBB11/12/13/14/15/16 BB001	Storage Tanks	NS	D	NSC	No	UKA	ASME VIII[8]
KBB	All KBB System Piping	NS	D	NSC	No	UKA	ANSI/ASME B31.1[6]
KBC	**Reactor Boron & Water Makeup System**						
KBC	Boric Acid Mixing Tank, Feed Pump and their Connected Equipment	NS	E	NSC	No	UFA	ANSI/ASME B31.1[6], ANSI/ASME B16.34[7], ASME VIII[8]
KBC	Boric Acid Storage Pumps and their Connected Equipment	NS	D	NSC	No	UFA	ANSI/ASME B31.1[6], ANSI/ASME B16.34[7], ASME VIII[8]
KBC	Boric Acid Storage Tanks and their Connected Equipment except 30KBC21/22 AA191	NS	D	NSC	No	UFA	ANSI/ASME B31.1[6], ANSI/ASME B16.34[7], ASME VIII[8]
30KBC21/22 AA003	Boric Acid Storage Tanks to GWPS Isolation Valves	NS-AQ	D	RS	No	UFA	ANSI/ASME B31.3[9], ANSI/ASME B16.34[7], ASME VIII[8], RG 1.143

Table 3.2.2-1—Classification Summary
Sheet 69 of 185

KKS System or Component Code	SSC Description	Safety Classification (Note 15)	Quality Group Classification	Seismic Category (Note 16)	10 CFR 50 Appendix B Program (Note 5)	Location (Note 17)	Comments/ Commercial Code
KBC	Demineralized Water Pumps and their Connected Equipment	NS	D	NSC	No	UKA	ANSI/ASME B31.1[6], ANSI/ASME B16.34[7], ASME VIII[8]
KBF	**Coolant Treatment System**						
30KBF25 AC001	After Cooler	NS	D	NSC	No	UKA	ANSI/ASME B31.1[6], ASME VIII[8]
30KBF20 AT001	Boric Acid Column (Evaporator)	NS	D	NSC	No	UKA	ANSI/ASME B31.1[6], ASME VIII[8]
30KBF22 AP001	Boric Acid Delivery Pump	NS	D	NSC	No	UKA	ANSI/ASME B31.1[6], ASME VIII[8]
30KBF20 AP003/004	Boric Acid Delivery Pumps	NS	D	NSC	No	UKA	ANSI/ASME B31.1[6], ASME VIII[8]
30KBF21 AP001	Boric Acid Metering Pump	NS	D	NSC	No	UKA	ANSI/ASME B31.1[6], ASME VIII[8]
30KBF20 AP001/002	Circulating Pumps	NS	D	NSC	No	UKA	ANSI/ASME B31.1[6], ASME VIII[8]
30KBF20 AA103/104	Concentration Control Valves (Boric Acid)	NS	D	NSC	No	UKA	ANSI/ASME B31.1[6], ASME VIII[8]
30KBF20 BB002	Condensate Collector	NS	D	NSC	No	UKA	ANSI/ASME B31.1[6], ASME VIII[8]

Table 3.2.2-1—Classification Summary
Sheet 70 of 185

KKS System or Component Code	SSC Description	Safety Classification (Note 15)	Quality Group Classification	Seismic Category (Note 16)	10 CFR 50 Appendix B Program (Note 5)	Location (Note 17)	Comments/ Commercial Code
30KBF20 AC006	Condensate Cooler	NS	D	NSC	No	UKA	ANSI/ASME B31.1[6], ASME VIII[8]
30KBF23/24 AP001	Condensate Pumps	NS	D	NSC	No	UKA	ANSI/ASME B31.1[6], ASME VIII[8]
30KBF20 BB001	Condensate Tank	NS	D	NSC	No	UKA	ANSI/ASME B31.1[6], ASME VIII[8]
30KBF20 AC003	Condenser	NS	D	NSC	No	UKA	ANSI/ASME B31.1[6], ASME VIII[8]
30KBF31/32/33 AA101	Control Valves (Bypass Vapor Compressors)	NS	D	NSC	No	UKA	ANSI/ASME B31.1[6], ASME VIII[8]
30KBF20 AA107/108	Control Valves (Excess Vapor)	NS	D	NSC	No	UKA	ANSI/ASME B31.1[6], ASME VIII[8]
30KBF40 AP002	Degasifier Circulation Pump	NS	D	NSC	No	UKA	ANSI/ASME B31.1[6], ASME VIII[8]
30KBF40 AT001	Degasifier Column	NS	D	NSC	No	UKA	ANSI/ASME B31.1[6], ASME VIII[8]
30KBF40 AP001	Degasifier Extraction Pump	NS	D	NSC	No	UKA	ANSI/ASME B31.1[6], ASME VIII[8]
30KBF40 AC005	Degasifier Heater	NS	D	NSC	No	UKA	ANSI/ASME B31.1[6], ASME VIII[8]
30KBF20 AC007	Electrical Pre-heater (Circulation)	NS	D	NSC	No	UKA	ANSI/ASME B31.1[6], ASME VIII[8]

Table 3.2.2-1—Classification Summary
Sheet 71 of 185

KKS System or Component Code	SSC Description	Safety Classification (Note 15)	Quality Group Classification	Seismic Category (Note 16)	10 CFR 50 Appendix B Program (Note 5)	Location (Note 17)	Comments/ Commercial Code
30KBF20 AC002	Evaporator	NS	D	NSC	No	UKA	ANSI/ASME B31.1[6], ASME VIII[8]
30KBF11/12 AP001	Evaporator Feed Pumps	NS	D	NSC	No	UKA	ANSI/ASME B31.1[6], ASME VIII[8]
30KBF20 AC004	Gas Cooler (Condensate)	NS	D	NSC	No	UKA	ANSI/ASME B31.1[6], ASME VIII[8]
30KBF40 AC004	Gas Cooler (Degasifier)	NS	D	NSC	No	UKA	ANSI/ASME B31.1[6], ASME VIII[8]
30KBF40 AA101	Level Control Valve (Degasifier Column)	NS	D	NSC	No	UKA	ANSI/ASME B31.1[6], ASME VIII[8]
30KBF20 AA101/102	Level Control Valves (Boric Acid/ Evaporator Column)	NS	D	NSC	No	UKA	ANSI/ASME B31.1[6], ASME VIII[8]
30KBF20 AA105/106	Level Control Valves (Condensate Collector)	NS	D	NSC	No	UKA	ANSI/ASME B31.1[6], ASME VIII[8]
30KBF23/24 AA101	Level Control Valves (Condensate Tank)	NS	D	NSC	No	UKA	ANSI/ASME B31.1[6], ASME VIII[8]
30KBF40 AC001	Makeup Water Preheater	NS	D	NSC	No	UKA	ANSI/ASME B31.1[6], ASME VIII[8]
30KBF20 AC005	Recuperative Boric Acid Cooler	NS	D	NSC	No	UKA	ANSI/ASME B31.1[6], ASME VIII[8]

Table 3.2.2-1—Classification Summary
Sheet 72 of 185

KKS System or Component Code	SSC Description	Safety Classification (Note 15)	Quality Group Classification	Seismic Category (Note 16)	10 CFR 50 Appendix B Program (Note 5)	Location (Note 17)	Comments/ Commercial Code
30KBF20 AC001	Recuperative Preheater	NS	D	NSC	No	UKA	ANSI/ASME B31.1[6], ASME VIII[8]
30KBF40 AC003	Reflux Condenser	NS	D	NSC	No	UKA	ANSI/ASME B31.1[6], ASME VIII[8]
30KBF40 AA192	Safety Valve (Downstream of Makeup Water Preheater)	NS	D	NSC	No	UKA	ANSI/ASME B31.1[6], ASME VIII[8]
30KBF11/12/20/40 AA191	Safety Valves	NS	D	NSC	No	UKA	ANSI/ASME B31.1[6], ASME VIII[8]
30KBF20 AA192/194	Safety Valves	NS	D	NSC	No	UKA	ANSI/ASME B31.1[6], ASME VIII[8]
30KBF35 AC001	Seal Water Cooler	NS	D	NSC	No	UKA	ANSI/ASME B31.1[6], ASME VIII[8]
30KBF35 AP001/002	Seal Water Pumps	NS	D	NSC	No	UKA	ANSI/ASME B31.1[6], ASME VIII[8]
30KBF35 AT001	Seal Water Strainer	NS	D	NSC	No	UKA	ANSI/ASME B31.1[6], ASME VIII[8]
30KBF35 BB001	Seal Water Tank	NS	D	NSC	No	UKA	ANSI/ASME B31.1[6], ASME VIII[8]
30KBF31/32/33 AN001	Vapor Compressors	NS	D	NSC	No	UKA	ANSI/ASME B31.1[6], ASME VIII[8]

Table 3.2.2-1—Classification Summary
Sheet 73 of 185

KKS System or Component Code	SSC Description	Safety Classification (Note 15)	Quality Group Classification	Seismic Category (Note 16)	10 CFR 50 Appendix B Program (Note 5)	Location (Note 17)	Comments/ Commercial Code
KBF	All KBF System Piping	NS	D	NSC	No	UKA	ANSI/ASME B31.1[6]
KBG	**Coolant Degasification System**						
30KBG20 AH501	Anti-Condensation Heater for Extraction Pump Motor	NS	D	NSC	No	UKA	ASME VIII[8]
30KBG10 AP001	Degasification Circulation Pump	NS	D	NSC	No	UKA	ASME VIII[8]
30KBG10 AT001	Degasifier Column	NS	D	NSC	No	UKA	ASME VIII[8]
30KBG10 AC001	Degasifier Column Electric Heater	NS	D	NSC	No	UKA	ASME VIII[8]
30KBG20 AP001	Degasifier Extraction Pump	NS	D	NSC	No	UKA	ASME VIII[8]
30KBG10 AC002	Degasifier Gas Condenser	NS	D	NSC	No	UKA	ASME VIII[8]
30KBG10 AC003	Degasifier Gas Cooler	NS	D	NSC	No	UKA	ASME VIII[8]
30KBG30 AN001	Degasifier Vacuum Pump	NS	D	NSC	No	UKA	ASME VIII[8]
30KBG10 BB301	Reference Vessel CL001	NS	D	NSC	No	UKA	ASME VIII[8]
30KBG10 BB302	Reference Vessel CL002	NS	D	NSC	No	UKA	ASME VIII[8]

Table 3.2.2-1—Classification Summary
Sheet 74 of 185

KKS System or Component Code	SSC Description	Safety Classification (Note 15)	Quality Group Classification	Seismic Category (Note 16)	10 CFR 50 Appendix B Program (Note 5)	Location (Note 17)	Comments/ Commercial Code
30KBG30 AC001	Sealing Liquid Cooler	NS	D	NSC	No	UKA	ASME VIII[8]
30KBG30 AT001	Sealing Liquid Strainer	NS	D	NSC	No	UKA	ASME VIII[8]
30KBG30 BB001	Sealing Liquid Tank	NS	D	NSC	No	UKA	ASME VIII8
KBG	Balance of KBG System	NS	D	NSC	No	UKA	ANSI/ASME B31.1[6], ASME VIII[8]
KBE	**Coolant Purification System**						
30KBE10 AT001	Coolant Filter	NS	D	NSC	No	UKA	ASME VIII[8]
30KBE10 AT003	Coolant Filter	NS	D	NSC	No	UKA	ASME VIII[8]
30KBE10 AT005	Coolant Filter	NS	D	NSC	No	UKA	ASME VIII[8]
KBE	KBE System Piping in UFA	NS	D	NSC	No	UFA	ANSI/ASME B31.1[6]
KBE	KBE System Piping in UKA and UKS	NS	D	NSC	No	UKA, UKS	ANSI/ASME B31.1[6]
30KBE11/12/20 AT001	Mixed Bed Ion Exchangers	NS	D	NSC	No	UKA	ASME VIII[8]
30KBE17 BB001	Overflow Tank	NS	D	NSC	No	UKA	ASME VIII[8]
30KBE40 AP001	Resin Flush Pump	NS	D	NSC	No	UKS	ASME VIII[8]
30KBE40 AT002	Resin Sieve	NS	D	NSC	No	UKA	ASME VIII[8]
30KBE11/12/20 AT002	Resin Sieves	NS	D	NSC	No	UKA	ASME VIII[8]

Table 3.2.2-1—Classification Summary
Sheet 75 of 185

KKS System or Component Code	SSC Description	Safety Classification (Note 15)	Quality Group Classification	Seismic Category (Note 16)	10 CFR 50 Appendix B Program (Note 5)	Location (Note 17)	Comments/ Commercial Code
30KBE31/32 AT001	Resin Sieves	NS	D	NSC	No	UKS	ASME VIII[8]
30KBE10 AT002	Resin Trap	NS	D	NSC	No	UKA	ASME VIII[8]
30KBE10 AT004	Resin Trap	NS	D	NSC	No	UKA	ASME VIII[8]
30KBE20 AT003	Resin Trap	NS	D	NSC	No	UKA	ASME VIII[8]
30KBE31/32 BB001	Resin Waste Tanks	NS	D	NSC	No	UKS	ASME VIII[8]
30KBE40 AT001	Sieve	NS	D	NSC	No	UKS	ASME VIII[8]
ELECTRICAL SYSTEMS							
BGA, BRA, BRU01, BRW, BTD, BTP, BUC, BUW	**Class 1E Uninterruptible Power Supply System**						
31/32/33/34BTD01	250 Vdc Class 1E Batteries	S	N/A	I	Yes	UJK	
31/32/33/34BTP01/ 02	250 Vdc Class 1E Battery Chargers	S	N/A	I	Yes	UJK	
31/32/33/34BUC	Class 1E 250 Vdc Switchboards	S	N/A	I	Yes	UJK	
BUW	Class 1E 250 Vdc to 24 Vdc Converters	S	N/A	I	Yes	UJK, UBP	
31/32/33/34BRA	Class 1E 480 V Motor Control Centers	S	N/A	I	Yes	UJK	

Table 3.2.2-1—Classification Summary
Sheet 76 of 185

KKS System or Component Code	SSC Description	Safety Classification (Note 15)	Quality Group Classification	Seismic Category (Note 16)	10 CFR 50 Appendix B Program (Note 5)	Location (Note 17)	Comments/ Commercial Code
BRW	Class 1E 480 Vac to 24 Vdc Converters	S	N/A	I	Yes	UJK, UBP	
31/32/33/34BRU01	Class 1E UPS Inverters	S	N/A	I	Yes	UJK	
31/32/33/34BGA01	Class 1E Panelboards	S	N/A	I	Yes	UJK	
31/32/33/34BGT01	Class 1E 480 V to 208/120 V transformers	S	N/A	I	Yes	UJK	
31/32/33/34BLT01	Non-Class 1E 480 V to 208/120 V Transformers	NS-AQ	N/A	II	Yes	UJK	
31/32/33/34BLB01	Non-Class 1E Panelboards	NS-AQ	N/A	II	Yes	UJK	
BD, BM, BN	**Emergency Power Supply System**						
31/32/33/34BMB	Class 1E 480 V Load Centers	S	N/A	I	Yes	UJK	
31/32/33/34BMD	Class 1E 480 V Load Centers	S	N/A	I	Yes	UQB	
31/34BMC	Class 1E 480 V Load Centers	S	N/A	I	Yes	1UJK, 4UJK	
31/32/33/34BNA01	Class 1E 480 V Motor Control Centers	S	N/A	I	Yes	UBP	

Table 3.2.2-1—Classification Summary
Sheet 77 of 185

KKS System or Component Code	SSC Description	Safety Classification (Note 15)	Quality Group Classification	Seismic Category (Note 16)	10 CFR 50 Appendix B Program (Note 5)	Location (Note 17)	Comments/ Commercial Code
32/33BNA02	Class 1E 480 V Motor Control Centers	S	N/A	I	Yes	UJK	
31/32/33/34BNB01/02	Class 1E 480 V Motor Control Centers	S	N/A	I	Yes	UJK	
31/32/33/34BNB03	Class 1E 480 V Motor Control Centers	S	N/A	I	Yes	UJK	
31/32/33/34BND01	Class 1E 480 V Motor Control Centers	S	N/A	I	Yes	UQB	
31/34BNC01	Class 1E 480 V Motor Control Centers	S	N/A	I	Yes	1UJK, 4UJK	
31/32/33/34BNT01	Class 1E 480 V Voltage Regulating Transformers	S	N/A	I	Yes	UJK	
31/32/33/34BDA	Class 1E 6.9 kV Switchgear	S	N/A	I	Yes	UJK	
31/32/33/34BDB	Class 1E 6.9 kV Switchgear	S	N/A	I	Yes	UJK	
31/32/33/34BDD	Class 1E 6.9 kV Switchgear	S	N/A	I	Yes	UQB	

Table 3.2.2-1—Classification Summary
Sheet 78 of 185

KKS System or Component Code	SSC Description	Safety Classification (Note 15)	Quality Group Classification	Seismic Category (Note 16)	10 CFR 50 Appendix B Program (Note 5)	Location (Note 17)	Comments/ Commercial Code
31/34BDC	Class 1E 6.9 kV Switchgear	S	N/A	I	Yes	1UJK, 4UJK	
31/32/33/34BMT04	Class 1E 6.9 kV to 480 V Transformers	S	N/A	I	Yes	UQB	
31/32/33/34BMT01	Class 1E 6.9 kV to 480 V transformers	S	N/A	I	Yes	UBP	
31/32/33/34BMT02	Class 1E 6.9 kV to 480 V transformers	S	N/A	I	Yes	UJK	
31/32/33/34BMT03	Class 1E 6.9 kV to 480 V transformers	S	N/A	I	Yes	UJK	
BRB, BRC, BRU03, BRV, BRX, BTB, BTM, BUD, BUE, BUV, BUX	**12 Hour Uninterruptible Power Supply System**						
31/32/33/34BUX	250 Vdc - 24 Vdc Converters (NI)	NS-AQ	N/A	NSC	No	UJK	
31/32BRV	250 Vdc - 24 Vdc Converters (TI)	NS-AQ	N/A	NSC	No	UBA	RG 1.155
31/32/33/34BUE	250 Vdc Switchboards (NI)	NS-AQ	N/A	NSC	No	UJK	
31/32BUD	250 Vdc Switchboards (TI)	NS-AQ	N/A	NSC	No	UBA	RG 1.155
31/32/33/34BRX	480 Vac - 24 Vdc Converters (NI)	NS-AQ	N/A	NSC	No	UJK	

Table 3.2.2-1—Classification Summary
Sheet 79 of 185

KKS System or Component Code	SSC Description	Safety Classification (Note 15)	Quality Group Classification	Seismic Category (Note 16)	10 CFR 50 Appendix B Program (Note 5)	Location (Note 17)	Comments/ Commercial Code
31/32BUV	480 Vac - 24 Vdc Converters (TI)	NS-AQ	N/A	NSC	No	UBA	RG 1.155
31/32/33/34BRB	480 Vac Motor Control Centers (NI)	NS-AQ	N/A	NSC	No	UJK	
31/32BRC	480 Vac Motor Control Centers (TI)	NS-AQ	N/A	NSC	No	UBA	RG 1.155
31/32BTD01	Batteries	NS-AQ	N/A	NSC	No	UBA	RG 1.155
30/31/32BTM01	Battery Chargers	NS-AQ	N/A	NSC	No	UBA	RG 1.155
31/32BRU03	Inverter with Static Bypass Switches	NS-AQ	N/A	NSC	No	UBA	RG 1.155
BG, BJ, BL, BZL	Lighting & Small Power System	NS	N/A	NSC	No	All	NFPA 101
BG, BJ, BL, BZL	Emergency Lighting	NS-AQ	N/A	NSC	No	All	NFPA 101
BRJ, BRU02, BRZ, BTA, BTL, BUB, BUM, BUZ	**Non-Class 1E Uninterruptible Power Supply System**						
32/33BUB	250 Vdc CRDM Switchboards	S	N/A	I	Yes	2UJK, 3UJK	
31/32BTA01	250 Vdc Non-Class 1E Batteries	NS	N/A	NSC	No	UBA	
30/31/32BTL01	250 Vdc Non-Class 1E Battery Chargers	NS	N/A	NSC	No	UBA	
31/32BUM	Non-Class 1E 250 Vdc Switchboards	NS	N/A	NSC	No	UBA	

Table 3.2.2-1—Classification Summary
Sheet 80 of 185

KKS System or Component Code	SSC Description	Safety Classification (Note 15)	Quality Group Classification	Seismic Category (Note 16)	10 CFR 50 Appendix B Program (Note 5)	Location (Note 17)	Comments/ Commercial Code
31/32BUZ	Non-Class 1E 250 Vdc to 24 Vdc Converters	NS	N/A	NSC	No	UBA	
31/32BRJ	Non-Class 1E 480 V Motor Control Centers	NS	N/A	NSC	No	UBA	
31/32BRZ	Non-Class 1E 480 Vac to 24 Vdc Converters	NS	N/A	NSC	No	UBA	
31/32BRU02	Non-Class 1E UPS Inverters	NS	N/A	NSC	No	UBA	
BB, BF, BH	**Normal Power Supply System**						
31/32/33/34BBC	Non-Class 1E 13.8 kV Switchgear	NS	N/A	NSC	No	UJK	
31/32/33/34BDE	Class 1E 13.8 kV Switchgear	S	N/A	I	Yes	UJK	
31BFT05	Non-Class 1E 13.8 kV - 480 V Transformer	NS	N/A	NSC	No	Site Specific	
31/32/33/34BFT01	Non-Class 1E 13.8 kV - 480 V Transformers	NS	N/A	NSC	No	UBA	
31/32/33/34BFT04	Non-Class 1E 13.8 kV - 480 V Transformers	NS	N/A	NSC	No	UJK	

Table 3.2.2-1—Classification Summary
Sheet 81 of 185

KKS System or Component Code	SSC Description	Safety Classification (Note 15)	Quality Group Classification	Seismic Category (Note 16)	10 CFR 50 Appendix B Program (Note 5)	Location (Note 17)	Comments/ Commercial Code
31/32BFT02/03	Non-Class 1E 13.8 kV - 480 V Transformers	NS	N/A	NSC	No	UBA	
32/34BFT05	Non-Class 1E 13.8 kV - 480 V Transformers	NS	N/A	NSC	No	UKS	
33BBT01	Non-Class 1E 13.8 kV - 6.9 kV Transformer	NS	N/A	NSC	No	UBA	
34BBT01	Non-Class 1E 13.8 kV - 6.9 kV Transformer	NS	N/A	NSC	No	UBA	
31/32/33/34BBT08	Non-Class 1E 13.8 kV - 6.9 kV Transformers	NS	N/A	NSC	No	UBA	
31/32/33/34/BBA	Non-Class 1E 13.8 kV Switchgear	NS	N/A	NSC	No	UBA	
31/32/33/34BBD	Non-Class 1E 13.8 kV Switchgear	NS	N/A	NSC	No	UQA	
31BFE	Non-Class 1E 480 V Load Center	NS	N/A	NSC	No	Site Specific	
32BFE	Non-Class 1E 480 V Load Center	NS	N/A	NSC	No	UKS	
34BFE	Non-Class 1E 480 V Load Center	NS	N/A	NSC	No	UKS	

Table 3.2.2-1—Classification Summary
Sheet 82 of 185

KKS System or Component Code	SSC Description	Safety Classification (Note 15)	Quality Group Classification	Seismic Category (Note 16)	10 CFR 50 Appendix B Program (Note 5)	Location (Note 17)	Comments/ Commercial Code
31/32/33/34BFA	Non-Class 1E 480 V Load Centers	NS	N/A	NSC	No	UBA	
31/32/33/34BFD	Non-Class 1E 480 V Load Centers	NS	N/A	NSC	No	UJK	
31/32BFB	Non-Class 1E 480 V Load Centers	NS	N/A	NSC	No	UBA	
31/32BFC	Non-Class 1E 480 V Load Centers	NS	N/A	NSC	No	UBA	
31/32BFX	Non-Class 1E 480 V Load Centers	NS-AQ	N/A	NSC	No	UBA	RG 1.155
[[31/32/33/34BFF/ BFG]]	Non-Class 1E 480 V Load Centers	NS	N/A	NSC	No	UQA	
31BHE01	Non-Class 1E 480 V Motor Control Center	NS	N/A	NSC	No	Site Specific	
32BHE01	Non-Class 1E 480 V Motor Control Center	NS	N/A	NSC	No	UKS	
34BHE01	Non-Class 1E 480 V Motor Control Center	NS	N/A	NSC	No	UKS	
31/32/33/34BHA01	Non-Class 1E 480 V Motor Control Centers	NS	N/A	NSC	No	UBA	

Table 3.2.2-1—Classification Summary
Sheet 83 of 185

KKS System or Component Code	SSC Description	Safety Classification (Note 15)	Quality Group Classification	Seismic Category (Note 16)	10 CFR 50 Appendix B Program (Note 5)	Location (Note 17)	Comments/ Commercial Code
31/32/33/34BHD01/02	Non-Class 1E 480 V Motor Control Centers	NS	N/A	NSC	No	UJK	
31/32BHB01/02	Non-Class 1E 480 V Motor Control Centers	NS	N/A	NSC	No	UBA	
31/32BHC01	Non-Class 1E 480 V Motor Control Centers	NS	N/A	NSC	No	UBA	
31/32BHX01	Non-Class 1E 480 V Motor Control Centers	NS-AQ	N/A	NSC	No	UBA	RG 1.155
31/32BFT08	Non-Class 1E 6.9 kV - 480 V Transformers	NS-AQ	N/A	NSC	No	UBA	RG 1.155
31/32/33/34BBH	Non-Class 1E 6.9 kV Switchgear	NS-AQ	N/A	NSC	No	UBA	RG 1.155
33/34BBG	Non-Class 1E 6.9 kV Switchgear	NS	N/A	NSC	No	Site Specific	
ACD	**Offsite Power System**						
30BBT01/02	[[500 kV]] - 13.8 kV Offsite Transformers	NS	N/A	NSC	No	UBE	
30BDT01/02	[[500 kV]] - 6.9 kV Offsite Transformers	NS	N/A	NSC	No	UBE	

Table 3.2.2-1—Classification Summary
Sheet 84 of 185

KKS System or Component Code	SSC Description	Safety Classification (Note 15)	Quality Group Classification	Seismic Category (Note 16)	10 CFR 50 Appendix B Program (Note 5)	Location (Note 17)	Comments/ Commercial Code
BA, CHA, MK	**Power Transmission (Main Generator, Main Transformer, Protection & Synch)**						
30BAT01/02/03	27 kV - [[500 kV]] Main Generator Stepup Transformers	NS	N/A	NSC	No	UBF	
30BAT04	Main Generator Neutral Ground Transformer	NS	N/A	NSC	No	UBA	
30MKT01	Main Generator Excitation Transformer	NS	N/A	NSC	No	UBA	
30MKC01	Main Generator Exciter	NS	N/A	NSC	No	UBA	
30MKA	Main Generator	NS	N/A	NSC	No	UBA	
BAW	**Lightning Protection & Grounding System**	NS	N/A	NSC	No	UZT	
I&C SYSTEMS							
JR, CLE, CLF, CLG, CLH	**Protection System**						
JR	Components used for Accident Monitoring Functions	S	N/A	I	Yes	UJK	

Table 3.2.2-1—Classification Summary
Sheet 85 of 185

KKS System or Component Code	SSC Description	Safety Classification (Note 15)	Quality Group Classification	Seismic Category (Note 16)	10 CFR 50 Appendix B Program (Note 5)	Location (Note 17)	Comments/ Commercial Code
30CLF35	Gateway, Division 2	NS-AQ	N/A	II	Yes	2UJK	Located in close proximity to safety-related equipment
30CLG35	Gateway, Division 3	NS-AQ	N/A	II	Yes	3UJK	Located in close proximity to safety-related equipment
JR	Service Unit	NS-AQ	N/A	II	Yes	UJK	
JR	Balance of Protection System	S	N/A	I	Yes	UJK	
DS, CLE6, CLF6, CLG6, CLH6	**Priority & Actuator Control System**						
CLE6, CLF6, CLG6, CLH6	Priority & Actuator Control System Cabinets	S	N/A	I	Yes	UJK	
CLE61/62/63, CLF61/62 CLG61/62, CLH61/ 62/63	Severe Accident Priority & Actuator Control System Cabinets	NS-AQ	N/A	II	Yes	UJK	Located in close proximity to safety-related equipment
DR	**Safety Automation System**						
DR	Components used for Accident Monitoring Functions	S	N/A	I	Yes	UBP, UBZ, UJA, UJK, UFA	
DR	Balance of DR System	S	N/A	I	Yes	UBP, UBZ, UJA, UJK, UFA	

Table 3.2.2-1—Classification Summary
Sheet 86 of 185

KKS System or Component Code	SSC Description	Safety Classification (Note 15)	Quality Group Classification	Seismic Category (Note 16)	10 CFR 50 Appendix B Program (Note 5)	Location (Note 17)	Comments/ Commercial Code
CWY	**Safety Information & Control System**						
CWY	SICS Cabinets	S	N/A	I	Yes	UJK	
CWY	SICS QDS for Safety Related I&C Functions	S	N/A	I	Yes	2UJK, 3UJK	
CWY	SICS QDS for Non-Safety Related I&C Functions	NS-AQ	N/A	II	Yes	2UJK	
CWY	Hardwire (Conventional) I&C for Safety Related I&C Functions	S	N/A	I	Yes	2UJK, 3UJK	
CWY	Hardwire (Conventional) I&C for Non-Safety Related I&C Functions	NS-AQ	N/A	II	Yes	2UJK	
JKR	**Reactor Pressure Vessel Level Measurement System**						
JKR	Portion of Guide Tube Only	S	N/A	I	Yes	UJA	
JKR	Reactor Pressure Vessel Measurement System	NS-AQ	N/A	II	Yes	UJA	

Table 3.2.2-1—Classification Summary
Sheet 87 of 185

KKS System or Component Code	SSC Description	Safety Classification (Note 15)	Quality Group Classification	Seismic Category (Note 16)	10 CFR 50 Appendix B Program (Note 5)	Location (Note 17)	Comments/ Commercial Code
JKS, JKQ	**Incore Instrumentation System**						
JKQ	Aeroball Measurement System Components and Associated Cabinets	NS-AQ	N/A	II	Yes	UJA	Components located inside and outside the reactor Vessel
JKS	Core Outlet Temperature Thermocouples	S	N/A	I	Yes	UJA	
JKS	Reactor Pressure Vessel Dome Temperature Measurement Subsystem	NS-AQ	N/A	II	Yes	UJA	Thermocouples are located inside the reactor vessel
JKS	Self Powered Neutron Detectors	S	N/A	I	Yes	UJA	
JKS	Self Powered Neutron Detectors Test Instrumentation	NS-AQ	N/A	II	Yes	UJA	Located in close proximity to safety-related equipment
JKT	**Excore Instrumentation System**						
JKT	Source Range Detectors	S	N/A	I	Yes	UJA	
JKT	Intermediate Range Detectors	S	N/A	I	Yes	UJA	

Table 3.2.2-1—Classification Summary
Sheet 88 of 185

KKS System or Component Code	SSC Description	Safety Classification (Note 15)	Quality Group Classification	Seismic Category (Note 16)	10 CFR 50 Appendix B Program (Note 5)	Location (Note 17)	Comments/ Commercial Code
JKT	Power Range Detectors	S	N/A	I	Yes	UJA	
JKT	Non-Safety Portions of JKT System	NS-AQ	N/A	II	Yes	UJA	
CPF	**Boron Concentration Measurement System**	S	N/A	I	Yes	UFA	
JYK	**Radiation Monitoring System**						JYK takes input from sensors in other systems
30JYK15CR101/102/103 30JYK28CR101 30JYK00GH111/112 30JYK00GH007/008	High Range Dose Rate Monitor	S	N/A	I	Yes	UJA, UFA	
30JYK00GH061/062 30JYK00GH109/110	BBX Main Control Room Vent Duct Gamma	S	N/A	I	Yes	UJK	
JYK	Balance of JYK System	NS	N/A	NSC	No	UJA, UFA, UJH, UJK, UKS, UKA	
JYK	Balance of JYK System	NS-AQ	N/A	NSC	No	UFA	

Table 3.2.2-1—Classification Summary
Sheet 89 of 185

KKS System or Component Code	SSC Description	Safety Classification (Note 15)	Quality Group Classification	Seismic Category (Note 16)	10 CFR 50 Appendix B Program (Note 5)	Location (Note 17)	Comments/ Commercial Code
~~30JYK15/28 CR101~~	~~High Range Dose Rate Monitors~~	~~S~~	~~N/A~~	~~I~~	~~Yes~~	~~UJA~~	
~~JYK~~	~~Balance of JYK System~~	~~NS~~	~~N/A~~	~~NSC~~	~~No~~	~~UJA, UFA, UJH, UJK, UKS, UKA~~	
BUA	**Control Rod Drive Control System**						
BUA	Contactors only	S	N/A	I	Yes	1UJK, 4UJK	
BUA	Balance of Control Rod Drive Control System	NS-AQ	N/A	II	Yes	1UJK, 4UJK	
CPE	**Seismic Monitoring System**	NS-AQ	N/A	I	Yes	Site Specific	Exception to Criteria based on the seismic monitoring required to be functional during and after a seismic event
CR	**Process Automation System**						
CR	Components used for Accident Monitoring Functions	NS-AQ	N/A	NSC	No	UJK, UBP, UBA, UAA	

Table 3.2.2-1—Classification Summary
Sheet 90 of 185

KKS System or Component Code	SSC Description	Safety Classification (Note 15)	Quality Group Classification	Seismic Category (Note 16)	10 CFR 50 Appendix B Program (Note 5)	Location (Note 17)	Comments/ Commercial Code
CR	Components used for Accident Monitoring Functions (adjacent to Safety Related Equipment)	NS-AQ	N/A	II	Yes	UJK, UBP	Located in close proximity to safety-related equipment
CR	PAS Subsystem: NIS, TIS, BPS	NS	N/A	NSC	No	UJK, UBP, UBA, UAA	
CR	PAS Subsystem: NIS, TIS, BPS (adjacent to Safety Related Equipment)	NS-AQ	N/A	II	Yes	UJK, UBP	Located in close proximity to safety-related equipment
	Diverse Actuation System						
	Diverse Actuation System (DAS - adjacent to Safety Related Equipment)	NS-AQ	N/A	II	Yes	UJK	Located in close proximity to safety-related equipment
	Diverse Actuation System	NS-AQ	N/A	NSC	No	UJK	
CRU	**Process Information & Control System**	NS-AQ	N/A	II	Yes	2UJK, 3UJK	
CYE	**Plant Fire Alarm System**	NS-AQ	N/A	NSC	No	All	NFPA

Table 3.2.2-1—Classification Summary
Sheet 91 of 185

KKS System or Component Code	SSC Description	Safety Classification (Note 15)	Quality Group Classification	Seismic Category (Note 16)	10 CFR 50 Appendix B Program (Note 5)	Location (Note 17)	Comments/ Commercial Code
JMU	**Hydrogen Monitoring System**						
JMU	Containment Isolation Valves and Associated Piping	S	B	I	Yes	UJA, 1UJH, 4UJH	ASME Class 2[2]
30JMU50/51 BZ001-004	Gas Samplers	NS-AQ	N/A	II	Yes	UJA	
30JMU20 CQ001-007	Hydrogen Sensors	S	N/A	I	Yes	UJA	
30JMU10 CQ001-005	Hydrogen Sensors	NS-AQ	N/A	II	Yes	UFA	
30JMU50/51 GH001	Local Control Unit	NS-AQ	N/A	II	Yes	1UJH, 4UJH	
JMU	Piping inside Containment up to Process and Analysis Modules outside Containment (except Containment Isolation)	NS-AQ	C	II	Yes	UJA, 1UJH, 4UJH	ASME Class 3[3]
30JMU50/51 BZ010	Process and Analysis Module	NS-AQ	N/A	II	Yes	1UJH, 4UJH	
30JMU10 GH001	Signal Processing Unit	S	N/A	I	Yes	1UJH, 4UJH	
JS	**Reactor Control, Surveillance & Limitation System**	NS-AQ	N/A	II	Yes	UJA, UJH	

Table 3.2.2-1—Classification Summary
Sheet 92 of 185

KKS System or Component Code	SSC Description	Safety Classification (Note 15)	Quality Group Classification	Seismic Category (Note 16)	10 CFR 50 Appendix B Program (Note 5)	Location (Note 17)	Comments/ Commercial Code
JZ, CS	**Severe Accident Instrumentation & Control**						JZ takes input from sensors in other systems
30CSE01 GW001	Severe Accident I&C Cabinet, Division 1	NS-AQ	D	NSC	Yes	1UJK	
30CSF01 GW001	Severe Accident I&C Cabinet, Division 2	NS-AQ	D	NSC	Yes	2UJK	
30CSG01 GW001	Severe Accident I&C Cabinet, Division 3	NS-AQ	D	NSC	Yes	3UJK	
30CSH01 GW001	Severe Accident I&C Cabinet, Division 4	NS-AQ	D	NSC	Yes	4UJK	
JYH	**Leak Detection Systems**						
JYH	Leakage Detection Remote Computer	NS	N/A	NSC	No	UJK	
JYH	Main Steam Local Humidity Detection System	NS-AQ	N/A	II	Yes	UJK, UJA	Located in close proximity to safety-related equipment. Used to support LBB analysis.
JYH	Balance of JYH System	NS-AQ	N/A	II	Yes	UJA	Located in close proximity to safety-related equipment. Portions used to support RCPB leakage assumption.

Table 3.2.2-1—Classification Summary
Sheet 93 of 185

KKS System or Component Code	SSC Description	Safety Classification (Note 15)	Quality Group Classification	Seismic Category (Note 16)	10 CFR 50 Appendix B Program (Note 5)	Location (Note 17)	Comments/ Commercial Code
JYL	**Fatigue Monitoring System**	NS-AQ	N/A	II	Yes	UJA	
JYF	**Loose Parts Monitoring System**	NS	N/A	NSC	No	UJA, UJH	
JYG, JYM	**Vibration Monitoring System**	NS	N/A	NSC	No	UJA, UJH	
CY	**Communication System**	NS	N/A	NSC	No	All	
N/A	**Turbine - Generator Instrumentation & Control**	NS	N/A	NSC	No	UAA, UBA, UMA	
DISTRIBUTED UTILITIES							
PE	**Essential Service Water System**						
30PED10/20/30/40 AA011	Cooling Tower Bypass Isolation Valves	S	C	I	Yes	UQB	ASME Class 3[3]
PED10/20/30/40	Cooling Tower Bypass Piping	S	C	I	Yes	UQB, URB	ASME Class 3[3]
PED10/20/30/40	Cooling Tower Distribution Piping	S	C	I	Yes	UQB, URB	ASME Class 3[3]

Table 3.2.2-1—Classification Summary
Sheet 94 of 185

KKS System or Component Code	SSC Description	Safety Classification (Note 15)	Quality Group Classification	Seismic Category (Note 16)	10 CFR 50 Appendix B Program (Note 5)	Location (Note 17)	Comments/ Commercial Code
30PED10/20/30/40 AA010	Cooling Tower Distribution Piping Isolation Valves	S	C	I	Yes	UQB	ASME Class 3[3]
PEB80	Dedicated ESW Blowdown Piping inside 4UQB	NS	E	NSC	No	4UQB	ANSI/ASME B31.1[6]
PEB80	Dedicated ESW Blowdown Piping outside 4UQB	NS	E	NSC	No	UZT	ANSI/ASME B31.1[6]
30PEB80 AT001	Dedicated ESW Debris Filter	NS	E	NSC	No	4UQB	ANSI/ASME B31.1[6], ANSI/ASME B16.34[7]
PEB80	Dedicated ESW Piping/Components	NS	E	NSC	No	4UQB, UZT, 4UJH	ANSI/ASME B31.1[6], ANSI/ASME B16.34[7], Manufacturer Standards
30PEB80 AP001	Dedicated ESW Pump	NS	E	NSC	No	4UQB	Manufacturer Standards
30PEB80 AA004	Dedicated ESW return isolation valve	S	C	I	Yes	4UJH	ASME Class 3[3]
PEB81	Dedicated ESW to/ from UQB Ventilation System Room Cooler	NS	E	NSC	No	4UQB	Manual Initiation ico Severe Accident only; ANSI/ASME B31.1[6]

Table 3.2.2-1—Classification Summary
Sheet 95 of 185

KKS System or Component Code	SSC Description	Safety Classification (Note 15)	Quality Group Classification	Seismic Category (Note 16)	10 CFR 50 Appendix B Program (Note 5)	Location (Note 17)	Comments/ Commercial Code
PEB80	Dedicated ESW Valves	NS	E	NSC	No	4UQB, UJH	ANSI/ASME B31.1[6]
PEB10/20/30/40	ESW Blowdown Piping Outside UQB	NS	E	NSC	No	UZT	ANSI/ASME B31.1[6]
30PEB10/20/30/40 AA003	ESW Blowdown Isolation Valve	S	C	I	Yes	UQB	ASME Class 3[3]
30PEB10/20/30/40 AA015/016	ESW Blowdown Isolation Valve	S	C	I	Yes	UQB	ASME Class 3[3]
30PEB10/20/30/ 40AA004	ESW Filter Emergency Blowdown Isolation Valve	S	C	I	Yes	UQB	ASME Class 3[3]
PEB10/20/30/40	Emergency Blowdown and Emergency Debris Filter Blowdown Piping to its terminal end outside of wall of UQB.	S	C	I	Yes	UQB	ASME Class 3[3]
PEB10/20/30/40	ESW Blowdown Piping inside UQBs and downstream of Isolation Valves 30PEB 10/20/30/40 AA003, AA015, AA016	NS	E	NSC	No	UQB	ANSI/ASME B31.1[6]

Table 3.2.2-1—Classification Summary
Sheet 96 of 185

KKS System or Component Code	SSC Description	Safety Classification (Note 15)	Quality Group Classification	Seismic Category (Note 16)	10 CFR 50 Appendix B Program (Note 5)	Location (Note 17)	Comments/ Commercial Code
PEB10/20/30/40	ESW Blowdown Piping upstream of Isolation Valves 30PEB 10/20/30/40 AA003, AA015, AA016	S	C	I	Yes	UQB	ASME Class 3[3]
30PED10/20/30/40 AA022	ESW Chemical Treatment System Isolation Valves	NS	E	NSC	No	UQB	ANSI/ASME B31.1[6]
PED10/20/30/40	ESW Chemical Treatment System Piping	NS	E	NSC	No	UQB	ANSI/ASME B31.1[6]
30PEB10/20/30/40 AT002	ESW Debris Filters	S	C	I	Yes	UQB	ASME Class 3[3]
30PED10/20/30/40 AA021	ESW Emergency Makeup Water Isolation Valves	S	C	I	Yes	UQB	ASME Class 3[3]
PED10/20/30/40	ESW Emergency Makeup Water Piping	S	C	I	Yes	UQB	ASME Class 3[3]
30PED10/20/30/40 AA019	ESW Normal Makeup Water Isolation Valves	S	C	I	Yes	UQB	ASME Class 3[3]

Table 3.2.2-1—Classification Summary
Sheet 97 of 185

KKS System or Component Code	SSC Description	Safety Classification (Note 15)	Quality Group Classification	Seismic Category (Note 16)	10 CFR 50 Appendix B Program (Note 5)	Location (Note 17)	Comments/ Commercial Code
PED10/20/30/40	ESW Normal Makeup Water Piping downstream of Isolation Valves 30PED10/20/30/40 AA019	S	C	I	Yes	UQB	ASME Class 3[3]
PED10/20/30/40	ESW Normal Makeup Water Piping upstream of Isolation Valves 30PED10/20/30/40 AA019	NS	E	NSC	No	UQB	ANSI/ASME B31.1[6]
30PED10/20/30/40 AA024	ESW UHS Tower Keep-Fill Isolation Valves	S	C	I	Yes	UQB	ASME Class 3[3]
30PED 10/20/30/40 AA025	ESW UHS Tower Keep-Fill Check Valves	S	C	I	Yes	UQB	ASME Class 3[3]
PEB10/20/30/40	ESW Piping/ Components (Trains PEB10/20/30/40)	S	C	I	Yes	UQB, UZT[22], UJH, UBP	Except as noted in this Table/ASME Class 3[3]
30PEB10/20/30/40 AP001	ESW Pumps	S	C	I	Yes	UQB	ASME Class 3[3]
30PEB21/22/23/24	ESW to/from EDG Coolers	S	C	I	Yes	UQB	ASME Class 3[3]

Table 3.2.2-1—Classification Summary
Sheet 98 of 185

KKS System or Component Code	SSC Description	Safety Classification (Note 15)	Quality Group Classification	Seismic Category (Note 16)	10 CFR 50 Appendix B Program (Note 5)	Location (Note 17)	Comments/ Commercial Code
30PEB11/12/13/14	ESW to/from UQB Ventilation System Room Cooler	S	C	I	Yes	UQB	Except as noted in this Table/ASME Class 3[3]
30PEB10/20/30/40	ESW Valves (Trains PEB10/20/30/40)	S	C	I	Yes	UQB, UJH, UBP	ASME Class 3[3]
30PED10/20/30/40 AN001/002	UHS Cooling Tower Fans	S	C	I	Yes	URB	
30PED10/20/30/40 AT003	Coarse Debris Screen	S	N/A	I	Yes	URB	ANSI/AISC N690-1994(R2004)s2 [13]
30PED10/20/30/40 AT004	Fine Debris Screen	S	N/A	I	Yes	URB	ANSI/AISC N690-1994(R2004)s2 [13]
30PED10/20/30/40 AC001	Mechanical Draft Cooling Towers (excluding fans)	S	C	I	Yes	URB	ASME Class 3[3]
QKA	**Safety Chilled Water System**						
30QKA10/20/30/40 AP107	Running Pumps	S	C	I	Yes	UJK	ASME Class 3[3]
30QKA10/20/30/40 AP108	Standby Pumps	S	C	I	Yes	UJK	ASME Class 3[3]
30QKA10/40 AH112	Air Cooled Chillers	S	C	I	Yes	UJK	ASME Class 3[3]
30QKA20/30 AH112	Water Cooled Chillers	S	C	I	Yes	UJK	ASME Class 3[3]
30QKA10/20/30/40 BB101	Expansion Tanks	S	C	I	Yes	UJK	ASME Class 3[3]

Table 3.2.2-1—Classification Summary
Sheet 99 of 185

KKS System or Component Code	SSC Description	Safety Classification (Note 15)	Quality Group Classification	Seismic Category (Note 16)	10 CFR 50 Appendix B Program (Note 5)	Location (Note 17)	Comments/ Commercial Code
QKA	All Valves and Instruments	S	C	I	Yes	UJK, UJH, UFA	ASME Class 3[3]
QKA	All Piping and Supports	S	C	I	Yes	UJK, UJH, UFA	ASME Class 3[3]
KA	**Component Cooling Water System**						
KAB10/20/30/40/50/60/70/80	CCWS Common Header (1 & 2) Piping and Valves in 1UJH & 4UJH, UJA, and UFA	S	C	I	Yes	1UJH, 4UJH, UFA, UJA	ASME Class 3[3]
KAB30/40/60/70	CCWS Containment Penetration, Piping, and the following Inner and Outer Isolation Valves.	S	B	I	Yes	UJA	ASME Class 2[2]
30KAB60/70 AA116	CCWS Control Valves for CVCS HP Coolers	S	C	I	Yes	UJA	ASME Class 3[3]
30KAB10/20 AA134	CCWS Control Valves for FPCS Heat Exchanger 1	S	C	I	Yes	UFA	ASME Class 3[3]
30KAA22/32 AA101	CCWS Control Valves to SCWS Chillers	S	C	I	Yes	2UJH, 3UJH	ASME Class 3[3]

Table 3.2.2-1—Classification Summary
Sheet 100 of 185

KKS System or Component Code	SSC Description	Safety Classification (Note 15)	Quality Group Classification	Seismic Category (Note 16)	10 CFR 50 Appendix B Program (Note 5)	Location (Note 17)	Comments/ Commercial Code
30KAA10/20/30/40 AA112	CCWS Heat Exchanger Bypass Valves	S	C	I	Yes	UJH	ASME Class 3[3]
30KAA10/20/30/40 AC001	CCWS Heat Exchangers	S	C	I	Yes	UJH	ASME Class 3[3]
30KAB30 AA050/ 051	CCWS Inner Containment Isolation Valves for RCP Thermal Barrier	S	B	I	Yes	UJA	ASME Class 2[2]
30KAB30 AA054/ 055	CCWS Inner Containment Isolation Valves for RCP Thermal Barrier	S	B	I	Yes	UJA	ASME Class 2[2]
30KAB40 AA002/ 012	CCWS Inner Containment Isolation Valves for Return from Containment HVAC and RC Drain Cooler	S	B	I	Yes	UJA	ASME Class 2[2]
30KAB60/70 AA014/ 018	CCWS Inner Containment Isolation Valves for Return from RCPs and CVCS Coolers	S	B	I	Yes	UJA	ASME Class 2[2]

Table 3.2.2-1—Classification Summary
Sheet 101 of 185

KKS System or Component Code	SSC Description	Safety Classification (Note 15)	Quality Group Classification	Seismic Category (Note 16)	10 CFR 50 Appendix B Program (Note 5)	Location (Note 17)	Comments/ Commercial Code
30KAA22/32 AA013	CCWS Isolation Valves to LSHI Pump Seal Coolers	S	C	I	Yes	2UJH, 3UJH	ASME Class 3[3]
KAB50/80	CCWS Non-Safety Related Piping and Valves in 1 & 4 UJH, or UFA	NS	E	NSC	No	1UJH, 4UJH, UFA	ANSI/ASME B31.1[6], ASME VIII[8]
KAB50/80	CCWS Non-Safety Related Piping and Valves in UKS or UKA	NS	E	NSC	No	UKA, UKS	ANSI/ASME B31.1[6], ASME VIII[8]
30KAB40 AA006	CCWS Outer Containment Isolation Valve for Return from Containment HVAC and RC Drain Cooler	S	B	I	Yes	1UJH	ASME Class 2[2]
30KAB40 AA001	CCWS Outer Containment Isolation Valve for Supply to Containment HVAC and RC Drain Cooler	S	B	I	Yes	1UJH	ASME Class 2[2]
30KAB30 AA049/ 052	CCWS Outer Containment Isolation Valves for RCP Thermal Barrier	S	B	I	Yes	1UJH	ASME Class 2[2]

Table 3.2.2-1—Classification Summary
Sheet 102 of 185

KKS System or Component Code	SSC Description	Safety Classification (Note 15)	Quality Group Classification	Seismic Category (Note 16)	10 CFR 50 Appendix B Program (Note 5)	Location (Note 17)	Comments/ Commercial Code
30KAB30 AA053/ 056	CCWS Outer Containment Isolation Valves for RCP Thermal Barrier	S	B	I	Yes	4UJH	ASME Class 2[2]
30KAB60/70 AA019	CCWS Outer Containment Isolation Valves for Return from RCPs and CVCS Coolers	S	B	I	Yes	1UJH, 4UJH	ASME Class 2[2]
30KAB60/70 AA013	CCWS Outer Containment Isolation Valves for Supply to RCPs and CVCS Coolers	S	B	I	Yes	1UJH, 4UJH	ASME Class 2[2]
KAA10/12/20/22/30/ 32/40/42	CCWS Piping and Valves in UJH	S	C	I	Yes	UJH	ASME Class 3[3]
30KAA10/20/30/40 AP001	CCWS Pumps	S	C	I	Yes	UJH	ASME Class 3[3]
30KAA10/20/30/40 BB001	CCWS Surge Tanks (Pools)	S	C	I	Yes	UJH	Liner: ASME Class 3[3]
30KAA12/22/32/42 AA005	CCWS to LHSI Heat Exchanger Isolation Valves	S	C	I	Yes	UJH	ASME Class 3[3]
30KAB80 AA019	CCWS UKA Common 1.B Return Isolation Valve	S	C	I	Yes	1UJH	ASME Class 3[3]

Table 3.2.2-1—Classification Summary
Sheet 103 of 185

KKS System or Component Code	SSC Description	Safety Classification (Note 15)	Quality Group Classification	Seismic Category (Note 16)	10 CFR 50 Appendix B Program (Note 5)	Location (Note 17)	Comments/ Commercial Code
30KAB80 AA015/ 016	CCWS UKA Common 1.B Supply Isolation Valves	S	C	I	Yes	1UJH	ASME Class 3[3]
30KAB50 AA004	CCWS UKA/UFA Common 2.B Return Isolation Valve	S	C	I	Yes	4UJH	ASME Class 3[3]
30KAB50 AA001/ 006	CCWS UKA/UFA Common 2.B Supply Isolation Valves	S	C	I	Yes	4UJH	ASME Class 3[3]
30KAA80 AC001	Dedicated CCWS Heat Exchanger	NS	E	NSC	No	2UJH	ASME VIII[8]
KAA80	Dedicated CCWS Piping and Valves in the 4UJH	NS	E	NSC	No	4UJH	ANSI/ASME B31.1[6], ANSI/ASME B16.34[7]
30KAA80 AP201	Dedicated CCWS Pressurization Pump	NS	E	NSC	No	4UJH	Manufacturer Standards
30KAA80 AA202	Dedicated CCWS Pressurization Pump Isolation Valve	NS	E	NSC	No	4UJH	ANSI/ASME B31.1[6], ANSI/ASME B16.34[7]
30KAA80 AP001	Dedicated CCWS Pump	NS	E	NSC	No	4UJH	Manufacturer Standards
30KAA80 BB001	Dedicated CCWS Surge Tank	NS	E	NSC	No	4UJH	ASME VIII[8]

Table 3.2.2-1—Classification Summary
Sheet 104 of 185

KKS System or Component Code	SSC Description	Safety Classification (Note 15)	Quality Group Classification	Seismic Category (Note 16)	10 CFR 50 Appendix B Program (Note 5)	Location (Note 17)	Comments/ Commercial Code
30KAA80 AA021	Dedicated CCWS Surge Tank Nitrogen Supply Isolation Valve	NS	E	NSC	No	4UJH	ANSI/ASME B31.1[6], ANSI/ASME B16.34[7]
30KAA80 AA020	Dedicated CCWS Surge Tank Outlet Isolation Valve	NS	E	NSC	No	4UJH	ANSI/ASME B31.1[6], ANSI/ASME B16.34[7]
30KAA10/20/30/40 AA027	DWDS Supply Isolation Valves	S	C	I	Yes	UJH	ASME Class 3[3]
KAA/10/20/30/40	Piping and Valves Upstream of the DWDS Supply Isolation Valves (KAA10/20/30/40 AA027)	NS	E	NSC	No	UJH	ANSI/ASME B31.1[6], ANSI/ASME B16.34[7]
30KAA10/20/30/40 AA010/032	Switchover Valves Return from Common Headers	S	C	I	Yes	UJH	ASME Class 3[3]
30KAA10/20/30/40 AA006/033	Switchover Valves Supply to Common Headers	S	C	I	Yes	UJH	ASME Class 3[3]
QN	**Operational Chilled Water System - Nuclear Island**						
30QNJ41AA002/003	Containment Isolation Valves	S	B	I	Yes	UJA, UFA	ASME Class 2[2]

Table 3.2.2-1—Classification Summary
Sheet 105 of 185

KKS System or Component Code	SSC Description	Safety Classification (Note 15)	Quality Group Classification	Seismic Category (Note 16)	10 CFR 50 Appendix B Program (Note 5)	Location (Note 17)	Comments/ Commercial Code
30QNJ41AA027/028	Containment Isolation Valves	S	B	I	Yes	UJA, UFA	ASME Class 2[2]
GHC	**Demineralized Water Distribution System**						
30GHC11/12 AP001	Demineralized Water Pumps	NS	E	NSC	No	UBA	Manufacturer Standards
30GHC60 AP001	Emergency Demineralized Water Pump	NS	E	NSC	No	UBA	Manufacturer Standards
30GHC01/02 BB001	Demineralized Water Storage Tanks	NS	E	NSC	No	UBA	AWWA D100
GHC	Containment Penetration including Inner and Outer Isolation Valves (GHC74 AA002, GHC74 AA001)and Associated Piping	S	B	I	Yes	UFA, UJA	ASME Class 2[2]
GHC	System Components in UJA, UFA, UBP, and UJH	NS	E	NSC	No	UJA, UFA, UBP, UJH	ANSI/ASME B31.1[6]
GHC	System Components in the Conventional Island, UKS, and UKA	NS	E	NSC	No	UBA, UMA, UKS, UKA	ANSI/ASME B31.1[6]

Table 3.2.2-1—Classification Summary
Sheet 106 of 185

KKS System or Component Code	SSC Description	Safety Classification (Note 15)	Quality Group Classification	Seismic Category (Note 16)	10 CFR 50 Appendix B Program (Note 5)	Location (Note 17)	Comments/ Commercial Code
GHW	**Seal Water Supply System**						
GHW	Remaining Seal Water Components and Piping Inside Safeguard Building 34UJH and the Fuel Building 30UFA	NS	E	NSC	No	4UJH, UFA	ANSI/ASME B31.1[6], ANSI/ASME B16.34[7]
GHW	Remaining Seal Water Components and Piping Outside Safeguard Building 34UJH and the Fuel Building 30UFA	NS	E	NSC	No	UKS, UKA, UBA, UMZ	ANSI/ASME B31.1[6], ANSI/ASME B16.34[7]
30GHW44 BB001	Seal Water Buffer Tank	NS	E	NSC	No	4UJH	ASME VIII[8]
30GHW45 BB001	Seal Water Buffer Tank	NS	E	NSC	No	UFA	ASME VIII[8]
30GHW45 AA005	Seal Water Buffer Tank Isolation Valve	NS	E	NSC	No	UFA	ANSI/ASME B31.1[6], ANSI/ASME B16.34[7]
30GHW44 AA003	Seal Water Check Valve	NS	E	NSC	No	4UJH	ANSI/ASME B31.1[6], ANSI/ASME B16.34[7]

Table 3.2.2-1—Classification Summary
Sheet 107 of 185

KKS System or Component Code	SSC Description	Safety Classification (Note 15)	Quality Group Classification	Seismic Category (Note 16)	10 CFR 50 Appendix B Program (Note 5)	Location (Note 17)	Comments/ Commercial Code
30GHW45 AA003	Seal Water Check Valve	NS	E	NSC	No	UFA	ANSI/ASME B31.1[6], ANSI/ASME B16.34[7]
30GHW46 AA002	Seal Water Check Valve	NS	E	NSC	No	UKS	ANSI/ASME B31.1[6], ANSI/ASME B16.34[7]
30GHW11/12 AA002	Seal Water Check Valves	NS	E	NSC	No	UBA	ANSI/ASME B31.1[6], ANSI/ASME B16.34[7]
30GHW11/12 AA011	Seal Water Check Valves	NS	E	NSC	No	UBA	ANSI/ASME B31.1[6], ANSI/ASME B16.34[7]
30GHW46 AA012	Seal Water Check Valve	NS	E	NSC	No	UKS	ANSI/ASME B31.1[6], ANSI/ ASME B16.34[7]
30GHW46 AA013	Seal Water Check Valve	NS	E	NSC	No	UKS	ANSI/ASME B31.1[6], ANSI/ ASME B16.34[7]
30GHW46 AA014	Seal Water Check Valve	NS	E	NSC	No	UKS	ANSI/ASME B31.1[6], ANSI/ ASME B16.34[7]
30GHW46 AA015	Seal Water Check Valve	NS	E	NSC	No	UKS	ANSI/ASME B31.1[6], ANSI/ ASME B16.34[7]

Table 3.2.2-1—Classification Summary
Sheet 108 of 185

KKS System or Component Code	SSC Description	Safety Classification (Note 15)	Quality Group Classification	Seismic Category (Note 16)	10 CFR 50 Appendix B Program (Note 5)	Location (Note 17)	Comments/ Commercial Code
30GHW46 AA016	Seal Water Check Valve	NS	E	NSC	No	UKS	ANSI/ASME B31.1[6], ANSI/ ASME B16.34[7]
30GHW46 AA017	Seal Water Check Valve	NS	E	NSC	No	UKS	ANSI/ASME B31.1[6], ANSI/ ASME B16.34[7]
30GHW46 AA018	Seal Water Check Valve	NS	E	NSC	No	UKS	ANSI/ASME B31.1[6], ANSI/ ASME B16.34[7]
30GHW46 AA019	Seal Water Check Valve	NS	E	NSC	No	UKS	ANSI/ASME B31.1[6], ANSI/ ASME B16.34[7]
30GHW46 AA020	Seal Water Check Valve	NS	E	NSC	No	UKS	ANSI/ASME B31.1[6], ANSI/ ASME B16.34[7]
30GHW46 AA023	Seal Water Check Valve	NS	E	NSC	No	UKS	ANSI/ASME B31.1[6], ANSI/ ASME B16.34[7]
30GHW46 AA024	Seal Water Check Valve	NS	E	NSC	No	UKS	ANSI/ASME B31.1[6], ANSI/ ASME B16.34[7]
30GHW46 AA025	Seal Water Check Valve	NS	E	NSC	No	UKS	ANSI/ASME B31.1[6], ANSI/ ASME B16.34[7]

Table 3.2.2-1—Classification Summary
Sheet 109 of 185

KKS System or Component Code	SSC Description	Safety Classification (Note 15)	Quality Group Classification	Seismic Category (Note 16)	10 CFR 50 Appendix B Program (Note 5)	Location (Note 17)	Comments/ Commercial Code
30GHW46 AA026	Seal Water Check Valve	NS	E	NSC	No	UKS	ANSI/ASME B31.1[6], ANSI/ ASME B16.34[7]
30GHW46 AA027	Seal Water Check Valve	NS	E	NSC	No	UKS	ANSI/ASME B31.1[6], ANSI/ ASME B16.34[7]
30GHW46 AA028	Seal Water Check Valve	NS	E	NSC	No	UKS	ANSI/ASME B31.1[6], ANSI/ ASME B16.34[7]
30GHW46 AA029	Seal Water Check Valve	NS	E	NSC	No	UKS	ANSI/ASME B31.1[6], ANSI/ ASME B16.34[7]
30GHW46 AA030	Seal Water Check Valve	NS	E	NSC	No	UKS	ANSI/ASME B31.1[6], ANSI/ ASME B16.34[7]
30GHW46 AA031	Seal Water Check Valve	NS	E	NSC	No	UKS	ANSI/ASME B31.1[6], ANSI/ ASME B16.34[7]
30GHW44 AA191	Seal Water Pressure Protection Relief Valve	NS	E	NSC	No	34UJH	ANSI/ASME B31.1[6], ANSI/ ASME B16.34[7]
30GHW45 AA191	Seal Water Pressure Protection Relief Valve	NS	E	NSC	No	UFA	ANSI/ASME B31.1[6], ANSI/ ASME B16.34[7]

Table 3.2.2-1—Classification Summary
Sheet 110 of 185

KKS System or Component Code	SSC Description	Safety Classification (Note 15)	Quality Group Classification	Seismic Category (Note 16)	10 CFR 50 Appendix B Program (Note 5)	Location (Note 17)	Comments/ Commercial Code
30GHW40 AA002	Seal Water NI Isolation Motor-Operated Valve	NS	E	NSC	No	UKA	ANSI/ASME B31.1[6], ANSI/ASME B16.34[7]
30GHW46 AA003/ 011	Seal Water Pressure Reducing Valves	NS	E	NSC	No	UKS	ANSI/ASME B31.1[6], ANSI/ASME B16.34[7]
30GHW46 AA191/ 193	Seal Water Pressure Relief Valves	NS	E	NSC	No	UKS	ANSI/ASME B31.1[6], ANSI/ASME B16.34[7]
30GHW11/12 AP001	Seal Water Pumps	NS	E	NSC	No	UBA	Manufacturer Standards
30GHW44 AA002	Seal Water Solenoid Valve	NS	E	NSC	No	4UJH	ANSI/ASME B31.1[6], ANSI/ASME B16.34[7]
30GHW45 AA002	Seal Water Solenoid Valve	NS	E	NSC	No	UFA	ANSI/ASME B31.1[6], ANSI/ASME B16.34[7]
30GHW44 BB302	Seal Water Tank	NS	E	NSC	No	4UJH	ASME VIII[8]
GK	**Potable & Sanitary Water Systems**						
GK	Potable and Sanitary Water Systems	NS	E	NSC	No	UBA, UKA, UKE, UKS, UJK, UMA	ANSI/ASME B31.1[6], ASME VIII[8]

Table 3.2.2-1—Classification Summary
Sheet 111 of 185

KKS System or Component Code	SSC Description	Safety Classification (Note 15)	Quality Group Classification	Seismic Category (Note 16)	10 CFR 50 Appendix B Program (Note 5)	Location (Note 17)	Comments/ Commercial Code
GK	GK System Components located in the UJH and UBP	NS	E	NSC	No	UJH, UBP	ANSI/ASME B31.1[6]
SGA, SGB	**Fire Water Distribution System**						
SGA	Fire Water Distribution System, Conventional Area (Not Providing Safe Shutdown Earthquake Protection)	NS-AQ	D	NSC	No	USG, UZT	NFPA 20, 2007 Ed. NFPA 22, 2003 Ed. NFPA 24, 2007 Ed. NFPA 25, 2002 Ed. NFPA 804, 2006 Ed.
SGA	Fire Water Distribution System, Conventional Area (Safe Shutdown Equipment Protection)	NS-AQ	D	II	Yes	USG, UZT	NFPA 20, 2007 Ed. NFPA 22, 2003 Ed. NFPA 24, 2007 Ed. NFPA 25, 2002 Ed. NFPA 804, 2006 Ed. ANSI/ASME B31.1[6], ASCE/SEI Std. 43-05, ANSI/AWWA D100-2005; Required for safe shutdown earthquake protection

Table 3.2.2-1—Classification Summary
Sheet 112 of 185

KKS System or Component Code	SSC Description	Safety Classification (Note 15)	Quality Group Classification	Seismic Category (Note 16)	10 CFR 50 Appendix B Program (Note 5)	Location (Note 17)	Comments/ Commercial Code
SGB	Fire Water Distribution System, SGB Subsystem within UKS and UKA inside Nuclear Island	NS-AQ	D	NSC	No	UKS, UKA	NFPA 14, 2007 Ed. NFPA 25, 2002 Ed. NFPA 804, 2006 Ed.
SGB	Fire Water Distribution System, SGB Subsystem (Safe Shutdown Equipment Protection)	NS-AQ	D	II	Yes	UBP, UFA, UJA, UJH, UJK, URB, UJB	NFPA 14, 2007 Ed. NFPA 25, 2002 Ed. NFPA 804, 2006 Ed. ANSI/ASME B31.1[6]; Required for safe shutdown earthquake protection
SGB	Fire water distribution system, SGB Subsystem Containment Isolation	S	B	I	Yes	UFA, UJA, UJB	ASME Class 2[2]
SGC	**Spray Deluge Systems**	NS-AQ	D	NSC	No	UJA, UBP	NFPA 13, 2007 Ed. NFPA 15, 2007 Ed. NFPA 25, 2002 Ed. NPFA 804, 2006 Ed.
SGE	**Sprinkler Systems**	NS-AQ	D	NSC	No	UBP	NFPA 13, 2007 Ed. NFPA 25, 2002 Ed. NFPA 804, 2006 Ed.

Table 3.2.2-1—Classification Summary
Sheet 113 of 185

KKS System or Component Code	SSC Description	Safety Classification (Note 15)	Quality Group Classification	Seismic Category (Note 16)	10 CFR 50 Appendix B Program (Note 5)	Location (Note 17)	Comments/ Commercial Code
SGJ	**Gaseous Fire Extinguishing Systems**	NS-AQ	D	NSC	No	2UJH	NFPA 2001, 2004 Ed. NFPA 804, 2006 Ed.
SC	**Compressed Air System**						
SCB	Compressed Air Distribution System	NS	E	NSC	No	UMA	ANSI/ASME B31.1[6]
SCB	Compressed Air Distribution System Containment Isolation Valves	S	B	I	Yes	UFA, UJA	ASME Class 2[2]; During DBA, the motor operated containment isolation valves are closed by signals from the Protection System
SCA	Compressed Air Generation System	NS	E	NSC	No	UMA	ANSI/ASME B31.1[6], ASME VIII[8]
SCB	Parts of the Compressed Air Distribution System Located in UJA, UFA, UBP, UJH, UJK, UJE, UQB	NS	E	NSC	No	UJA, UFA, UBP, UJH, UJK, UQB, UJE	ANSI/ASME B31.1[6]

Table 3.2.2-1—Classification Summary
Sheet 114 of 185

KKS System or Component Code	SSC Description	Safety Classification (Note 15)	Quality Group Classification	Seismic Category (Note 16)	10 CFR 50 Appendix B Program (Note 5)	Location (Note 17)	Comments/ Commercial Code
QJ	**Central Gas Distribution System**						Only Containment Isolation in scope.
QJB	Containment Isolation Valves, Associated Piping, and Penetration	S	B	I	Yes	UFA, UJA	ASME Class 2[2]
AUXILIARY SYSTEMS							
JMM	**Leak-off System**						
JMM30	Containment Inflating/Deflating Subsystem - Air Intake and Discharge Piping	NS	E	NSC	No	UFA	ANSI/ASME B31.1[6]
JMM30	Containment Inflating/Deflating Subsystem - Containment Isolation Valves and Related Piping, Equipment, and Instruments	S	B	I	Yes	UFA, UJA, UJB	ASME Class 2[2]

Table 3.2.2-1—Classification Summary
Sheet 115 of 185

KKS System or Component Code	SSC Description	Safety Classification (Note 15)	Quality Group Classification	Seismic Category (Note 16)	10 CFR 50 Appendix B Program (Note 5)	Location (Note 17)	Comments/ Commercial Code
JMM30	Containment Inflating/Deflating Subsystem - Leak-off Pipe to JMM21/22/23 from Outer Containment Isolation Valve	S	C	I	Yes	UFA	ASME Class 3[3]
JMM21/22/23	Containment Leakage Exhaust Subsystem - Containment Isolation Valves and Related Piping, Equipment, and Instruments	S	B	I	Yes	UJA, UJB	ASME Class 2[2]
JMM21/22/23	Containment Leakage Exhaust Subsystem - Remaining Piping, Equipment and Instruments	S	C	I	Yes	UFA, UJA, UJB, UJH	ASME Class 3[3]

Table 3.2.2-1—Classification Summary
Sheet 116 of 185

KKS System or Component Code	SSC Description	Safety Classification (Note 15)	Quality Group Classification	Seismic Category (Note 16)	10 CFR 50 Appendix B Program (Note 5)	Location (Note 17)	Comments/ Commercial Code
JMM10	Containment Leaktightness Test Subsystem - Contaminant Isolation Valves and Related Piping, Equipment and Instruments	S	B	I	Yes	UJA, UJB, UJH	ASME Class 2[2]
JMM10	Containment Leaktightness Test Subsystem - Remaining Piping, Equipment and Instruments	NS	E	NSC	No	UJA, UJB, UJH, UZT	ANSI/ASME B31.1[6]
KT	**Nuclear Island Drain & Vent Systems**						
30KTC10 AP004	Annular Sump Pump - UJB	NS	D	NSC	No	UJB	Manufacturer Standards
30KTA10 AA017	Containment Isolation Valve	S	B	I	Yes	UJA	ASME Class 2[2]
30KTA10 AA018	Containment Isolation Valve	S	B	I	Yes	UFA	ASME Class 2[2]
30KTD10 AA015	Containment Isolation Valve	S	B	I	Yes	UJA	ASME Class 2[2]
30KTD10 AA024	Containment Isolation Valve	S	B	I	Yes	UFA	ASME Class 2[2]

Table 3.2.2-1—Classification Summary
Sheet 117 of 185

KKS System or Component Code	SSC Description	Safety Classification (Note 15)	Quality Group Classification	Seismic Category (Note 16)	10 CFR 50 Appendix B Program (Note 5)	Location (Note 17)	Comments/ Commercial Code
30KTC10 AA005/029	Containment Isolation Valves	S	B	I	Yes	UJA	ASME Class 2[2]
30KTC10 AA006/010	Containment Isolation Valves	S	B	I	Yes	UFA	ASME Class 2[2]
KTA, KTC, KTD	Containment Penetration: Piping and Valves	S	B	I	Yes	UJA, UFA	ASME Class 2[2]
30KTA11 AP001	Evacuation Unit	NS	D	NSC	No	UJA	Manufacturer Standards
30KTC10 AP003	Floor Drain 1 Mobile Pump - UJA	NS	D	NSC	No	UJA	Manufacturer Standards
30KTC10 AP001/002	Floor Drain 1 Pumps - UJA	NS	D	NSC	No	UJA	Manufacturer Standards
30KTC20 AP001-004	Floor Drain 1 Pumps - UJH	NS	D	NSC	No	UJH	Manufacturer Standards
30KTC40 AP001-005	Floor Drain 1 Pumps - UKA	NS	D	NSC	No	UKA	Manufacturer Standards
30KTC50/51/52/53/54 AP001	Floor Drain 1 Pumps - UKA	NS	D	NSC	No	UKA	Manufacturer Standards
30KTD60 AP001	Floor Drain 2 Pump - UKE	NS	E	NSC	No	UKE	Manufacturer Standards
30KTC30 AP001/002	Floor Drain 2 Pumps - UFA	NS	D	NSC	No	UFA	Manufacturer Standards

Table 3.2.2-1—Classification Summary
Sheet 118 of 185

KKS System or Component Code	SSC Description	Safety Classification (Note 15)	Quality Group Classification	Seismic Category (Note 16)	10 CFR 50 Appendix B Program (Note 5)	Location (Note 17)	Comments/ Commercial Code
30KTD40 AP001-003	Floor Drain 2 Pumps - UKA	NS	D	NSC	No	UKA	Manufacturer Standards
30KTE20 AP001	Floor Drain 3 Mobile Pump	NS	E	NSC	No	1UJH	Manufacturer Standards
30KTE20 AP002	Floor Drain 3 Mobile Pump	NS	E	NSC	No	4UJH	Manufacturer Standards
30KTE20 AP003/004	Floor Drain 3 Pumps - UJH	NS	E	NSC	No	UJH	Manufacturer Standards
30KTE40 AP001/002	Floor Drain 3 Pumps - UKA	NS	D	NSC	No	UKA	Manufacturer Standards
30KTD10 AP002	Floor Drains 2 Annulus Pump - UJB	NS	D	NSC	No	UJB	Manufacturer Standards
30KTD10 AP003	Floor Drains 2 Mobile Pump - UJA	NS	D	NSC	No	UJA	Manufacturer Standards
30KTD10 AP001	Floor Drains 2 Pump - UJA	NS	D	NSC	No	UJA	Manufacturer Standards
30KTD10 BB001	Floor Drains 2 Tank - UJA	NS	D	NSC	No	UJA	ASME VIII[8]
30KTA11 BB001	Phase Separator Drain Pot	NS	D	NSC	No	UJA	ASME B31.1[6]
KTA30, KTB30, KTC30	Piping & Valves Inside UFA	NS	D	NSC	No	UFA	ANSI/ASME B31.1[6]
KTA, KTC, KTD	Piping & Valves Inside UJA	NS	D	NSC	No	UJA	ANSI/ASME B31.1[6]

Table 3.2.2-1—Classification Summary
Sheet 119 of 185

KKS System or Component Code	SSC Description	Safety Classification (Note 15)	Quality Group Classification	Seismic Category (Note 16)	10 CFR 50 Appendix B Program (Note 5)	Location (Note 17)	Comments/ Commercial Code
KTA20, KTB20, KTC20	Piping & Valves Inside UJH (Controlled Areas)	NS	D	NSC	No	UJH	ANSI/ASME B31.1[6]
KTE20	Piping & Valves Inside UJH (Non-Controlled Areas)	NS	E	NSC	No	UJH	ANSI/ASME B31.1[6]
KTA41, KTB40, KTC40, KTD40	Piping & Valves Inside UKA	NS	D	NSC	No	UKA	ANSI/ASME B31.1[6]
KTD60	Piping & Valves Inside UKE	NS	E	NSC	No	UKE	ANSI/ASME B31.1[6]
KTC50/51/52/53/54	Piping & Valves Inside UKS	NS	D	NSC	No	UKS	ANSI/ASME B31.1[6]
KT	Piping and Valves Connected to Radwaste	NS-AQ	D	RS	No	UKA	ASME B31.1[6]
30KTA10 AC001	Primary Effluents Heat Exchanger	NS	D	NSC	No	UJA	ASME VIII[8]
30KTA41 BB001	Primary Leakage Measurement Bottle	NS	D	NSC	No	UJA	ASME VIII[8]
30KTB20 AP001	Process Drain Mobile Pumps - 1UJH	NS	D	NSC	No	1UJH	Manufacturer Standards
30KTB20 AP004	Process Drain Mobile Pumps - 4UJH	NS	D	NSC	No	4UJH	Manufacturer Standards

Table 3.2.2-1—Classification Summary
Sheet 120 of 185

KKS System or Component Code	SSC Description	Safety Classification (Note 15)	Quality Group Classification	Seismic Category (Note 16)	10 CFR 50 Appendix B Program (Note 5)	Location (Note 17)	Comments/ Commercial Code
30KTB20 AP002	Process Drain Pump - 2UJH	NS	D	NSC	No	2UJH	Manufacturer Standards
30KTB20 AP003	Process Drain Pump - 3UJH	NS	D	NSC	No	3UJH	Manufacturer Standards
30KTA10 AP003	Process Drain Pump - UJA	NS	D	NSC	No	UJA	Manufacturer Standards
30KTB30 AP001/002	Process Drain Pumps - UFA	NS	D	NSC	No	UFA	Manufacturer Standards
30KTB20 BB002	Process Drain Tank - 2UJH	NS	D	NSC	No	2UJH	ASME VIII[8]
30KTB20 BB003	Process Drain Tank - 3UJH	NS	D	NSC	No	3UJH	ASME VIII[8]
30KTA10 BB002	Process Drain Tank - UJA	NS	D	NSC	No	UJA	ASME VIII[8]
30KTB30 BB001/002	Process Drain Tanks - UFA	NS	D	NSC	No	UFA	ASME VIII[8]
30KTB40 BB001	Process Drain UKA Relay Tank	NS	D	NSC	No	UKA	ASME VIII[8]
30KTC10 CL001/002	Reactor Building Sump Level Indicators	S	N/A	I	Yes	UJA	Manufacturer Standards, RG 1.45, Rev. 1, IEEE 323, IEEE 344
30KTA10 BB001	Reactor Coolant Drain Tank	NS	D	NSC	No	UJA	ASME VIII[8]

Table 3.2.2-1—Classification Summary
Sheet 121 of 185

KKS System or Component Code	SSC Description	Safety Classification (Note 15)	Quality Group Classification	Seismic Category (Note 16)	10 CFR 50 Appendix B Program (Note 5)	Location (Note 17)	Comments/ Commercial Code
30KTA30 AP001/002	Recyclable Effluents Pumps - UFA	NS	D	NSC	No	UFA	Manufacturer Standards
30KTA10 AP001/002	Recyclable Effluents Pumps - UJA	NS	D	NSC	No	UJA	Manufacturer Standards
30KTA20 AP001-004	Recyclable Effluents Pumps - UJH	NS	D	NSC	No	UJH	Manufacturer Standards
30KTA40 AP001/002	Recyclable Effluents Pumps - UKA	NS	D	NSC	No	UKA	Manufacturer Standards
30KTA40 BB001	Recyclable Effluents Tank - UKA	NS	D	NSC	No	UKA	ASME VIII[8]
30KTA30 BB001/002	Recyclable Effluents Tanks - UFA	NS	D	NSC	No	UFA	ASME VIII[8]
30KTA20 BB001-004	Recyclable Effluents Tanks - UJH	NS	D	NSC	No	UJH	ASME VIII[8]
30KTE20 CL001/ 003/005/007	Sump Level Sensors	S	N/A	I	Yes	UJH	Manufacturer Standards, IEEE 323, IEEE 344
30KTC10 CL005	Sump Level Sensors	S	N/A	I	Yes	UJA	Manufacturer Standards, IEEE 323, IEEE 344
30KTC30 CL001/003	Sump Level Sensors	S	N/A	I	Yes	UFA	Manufacturer Standards, IEEE 323, IEEE 344

Table 3.2.2-1—Classification Summary
Sheet 122 of 185

KKS System or Component Code	SSC Description	Safety Classification (Note 15)	Quality Group Classification	Seismic Category (Note 16)	10 CFR 50 Appendix B Program (Note 5)	Location (Note 17)	Comments/ Commercial Code
30KTD10 CL002	Sump Level Sensors	S	N/A	I	Yes	UJB	Manufacturer Standards, IEEE 323, IEEE 344
KU	**Nuclear Sampling System**						
30KUA70 BB001	Active Sample Storage Tank	NS	D	NSC	No	UKA	ASME VIII[8]
KUA66	Argon/Nitrogen Bottles	NS	E	NSC	No	UKA	Manufacturer Standards
KUA65/66	Argon/Nitrogen Piping	NS	E	NSC	No	UKA	Manufacturer Standards
30KUA10 AC002	Boron Sample Heat Exchanger	NS-AQ	D	NSC	No	UFA	ASME VIII[8]
KUA, KUB	Chilled Water Piping Distribution (QN)	NS	E	NSC	No	UKA	Manufacturer Standards
30KUA50 AT001	Commissioning Filter	NS	E	NSC	No	UKA	Manufacturer Standards
30KUA10/20/30/40 AT001	Commissioning Filters	NS	E	NSC	No	UFA	Manufacturer Standards
30KUA69 AT001-004	Commissioning Filters	NS	E	NSC	No	UJH	Manufacturer Standards
30KUA65 AC002/003	Condensers	NS	D	NSC	No	UKA	ASME VIII[8]
30KUA10 AA003	Containment Isolation Valve	S	B	I	Yes	UJA	ASME Class 2[2]

Table 3.2.2-1—Classification Summary
Sheet 123 of 185

KKS System or Component Code	SSC Description	Safety Classification (Note 15)	Quality Group Classification	Seismic Category (Note 16)	10 CFR 50 Appendix B Program (Note 5)	Location (Note 17)	Comments/ Commercial Code
30KUA10 AA004	Containment Isolation Valve	S	B	I	Yes	UFA	ASME Class 2[2]
30KUA20 AA002	Containment Isolation Valve	S	B	I	Yes	UJA	ASME Class 2[2]
30KUA30 AA003	Containment Isolation Valve	S	B	I	Yes	UJA	ASME Class 2[2]
30KUB10 AA001	Containment Isolation Valve	S	B	I	Yes	UJA	ASME Class 2[2]
30KUB10 AA002	Containment Isolation Valve	S	B	I	Yes	UFA	ASME Class 2[2]
30KUA20 AA003/ 004	Containment Isolation Valves	S	B	I	Yes	UFA	ASME Class 2[2]
30KUA65 AT001	Degasser	NS	D	NSC	No	UKA	ASME VIII[8]
30KUA66 AT001/ 002	Filters	NS	D	NSC	No	UKA	ASME VIII[8]
30KUA65 AT002	Gas Drier	NS	D	NSC	No	UKA	ASME VIII[8]
KUA62	Hydrogen Piping	NS	E	NSC	No	UKA	Manufacturer Standards
30KUA80 AN001	Mobile Pump	NS	D	NSC	No	UKA	Manufacturer Standards
30KUA67 AC001-005	Multiple Heat Exchangers	NS	D	NSC	No	UKA	ASME VIII[8]
30KUA69 AC001-004	Multiple Heat Exchangers	NS	D	NSC	No	UKA	ASME VIII[8]

Table 3.2.2-1—Classification Summary
Sheet 124 of 185

KKS System or Component Code	SSC Description	Safety Classification (Note 15)	Quality Group Classification	Seismic Category (Note 16)	10 CFR 50 Appendix B Program (Note 5)	Location (Note 17)	Comments/ Commercial Code
KUF	Piping	NS	D	NSC	No	UKA	ANSI/ASME B31.1[6]
KUA	Piping & Valves (Upstream Outer Containment Isolation Valve)	S	B	I	Yes	UJA, UFA	ASME Class 2[2]
KUA	Piping & Valves (from Boron Grab Sample)	NS-AQ	D	NSC	No	UFA, UKA	ANSI/ASME B31.1[6]
KUB	Piping (from Outer Containment Isolation Valve)	NS	D	NSC	No	UFA, UKA	ASME VIII[8]
KUB	Piping (Upstream Outer Containment Isolation Valve)	S	B	I	Yes	UJA, UFA	ASME Class 2[2]
30KUA10/20/30 AC001	Primary Heat Exchangers	NS-AQ	D	NSC	No	UFA	ASME VIII[8]
KUB	Remaining Valves	NS	D	NSC	No	UKA	ANSI/ASME B31.1[6]
30KUA68 AP001	Sample Backfeed Pump	NS	D	NSC	No	UKA	Manufacturer Standards
30KUB10 BZ001	Sample Box	NS	D	NSC	No	UKA	ASME VIII[8]
30KUB10 AN001	Sample Box Ventilation Pump	NS	D	NSC	No	UKA	Manufacturer Standards
KUA67/70	Sample Box/ Ventilation Piping	NS	E	NSC	No	UKA	Manufacturer Standards

Table 3.2.2-1—Classification Summary
Sheet 125 of 185

KKS System or Component Code	SSC Description	Safety Classification (Note 15)	Quality Group Classification	Seismic Category (Note 16)	10 CFR 50 Appendix B Program (Note 5)	Location (Note 17)	Comments/ Commercial Code
KUB10	Sample Box/ Ventilation Piping	NS	E	NSC	No	UKA	Manufacturer Standards
30KUA66/67/70/80 BZ001	Sample Boxes	NS	D	NSC	No	UKA	ASME VIII[8]
30KUA62/63/64/65 AC001	Sample Chillers	NS	D	NSC	No	UKA	ASME VIII[8]
30KUA68 BB001	Sample Collecting Vessel	NS	D	NSC	No	UKA	ASME VIII[8]
30KUA70 AC001	Sample Heat Exchanger	NS	D	NSC	No	UKA	ASME VIII[8]
30KUA69 AP002-004	Sample Pumps	NS	D	NSC	No	UJH	Manufacturer Standards
30KUB10 BB001	Slightly Active Sample Storage Tank	NS	D	NSC	No	UKA	ASME VIII[8]
30KUA65 GH001	Thermostat	NS	E	NSC	No	UKA	Manufacturer Standards
KUF	Valves	NS	D	NSC	No	UKA	ANSI/ASME B31.1[6]
KUA66	Ventilation Piping	NS	E	NSC	No	UKA	Manufacturer Standards
KUL	**Severe Accident Sampling System**						
30KUL53 BZ001	Backfeeding Module	NS-AQ	D	NSC	No	4UJH	ASME VIII[8]
30KUL51 AA001	Containment Isolation Valve	S	B	I	Yes	UJA	ASME Class 2[2]

Table 3.2.2-1—Classification Summary
Sheet 126 of 185

KKS System or Component Code	SSC Description	Safety Classification (Note 15)	Quality Group Classification	Seismic Category (Note 16)	10 CFR 50 Appendix B Program (Note 5)	Location (Note 17)	Comments/ Commercial Code
30KUL52 AA002	Containment Isolation Valve	S	B	I	Yes	UJA	ASME Class 2[2]
30KUL51/52 AA003	Containment Isolation Valves	S	B	I	Yes	4UJH	ASME Class 2[2]
30KUL54 BZ001	Gas Sampling Module	NS-AQ	D	NSC	No	4UJH	ASME VIII[8]
KUL	Piping and Valves in 4UJH	NS-AQ	D	NSC	No	4UJH	ANSI/ASME B31.1[6]
KUL	Piping and Valves in UFA	NS-AQ	D	NSC	No	UFA	ANSI/ASME B31.1[6]
KUL	Piping and Valves in UJA	NS-AQ	D	NSC	No	UJA	ANSI/ASME B31.1[6]
30KUL51/52 BZ001	Pool Samplers	NS-AQ	D	NSC	No	UJA	ASME VIII[8]
30KUL58 AP001	Proportioning Pump	NS-AQ	D	NSC	No	UFA	Manufacturer Standards
30KUL60 BZ001	Sample Box	NS-AQ	D	NSC	No	UFA	ASME VIII[8]
30KUL55 BZ001	Scrubbing Liquid Sampling Module	NS-AQ	D	NSC	No	4UJH	ASME VIII[8]
30KUL58 BB001	Sodium Hydroxide Tank	NS-AQ	D	NSC	No	UFA	API 620[10]
30KUL56 BZ001	Sump Sampling Module	NS-AQ	D	NSC	No	4UJH	ASME VIII[8]

Table 3.2.2-1—Classification Summary
Sheet 127 of 185

KKS System or Component Code	SSC Description	Safety Classification (Note 15)	Quality Group Classification	Seismic Category (Note 16)	10 CFR 50 Appendix B Program (Note 5)	Location (Note 17)	Comments/ Commercial Code
XJA, XKA, XJG, XJN XJQ, XJR, XJV, XJX (10/20/30/40), CXN (10/11/20/21/30/31/40/41)	**Emergency Diesel Generator Set**						
30XKA10/20/30/40 AG001	AC Synchronous Generator	S	N/A	I	Yes	UBP	IEEE 387; NEMA MG 1-2003; IEEE 112
30XJX10/20/30/40	Air Start System Receiver Inlet Check Valves to Engine	S	C	I	Yes	UBP	ASME Class 3[3]
30XJX10/20/30/40	Air Start System Up to Receiver Inlet Check Valves	NS-AQ	D	II	~~No~~Yes	UBP	ANSI/ASME B31.1[6]
30XJQ10/20/30/40	Combustion Air System	S	C	I	Yes	UBP	ASME Class 3[3]
30CXN10/20/30/40	Control Panels	S	N/A	I	Yes	UBP	IEEE 420
30XJG10/20/30/40	Cooling Water System	S	C	I	Yes	UBP	ASME Class 3[3]
30XJA10/20/30/40 AV100	Diesel Engine (Excluding Engine-Driven Cooling, Lubrication, and Fuel Pumps)	S	N/A	I	Yes	UBP	

Table 3.2.2-1—Classification Summary
Sheet 128 of 185

KKS System or Component Code	SSC Description	Safety Classification (Note 15)	Quality Group Classification	Seismic Category (Note 16)	10 CFR 50 Appendix B Program (Note 5)	Location (Note 17)	Comments/ Commercial Code
30XJA10/20/30/40 AP100	Engine Governor	S	N/A	I	Yes	UBP	
30XJR10/20/30/40	Exhaust Emissions Equipment and Pipe	NS	E	NSC	No	UBP	ANSI/ASME B31.1[6]
30XJR10/20/30/40	Exhaust Silencer and Exhaust Stack	NS-AQ	D	II	Yes	UBP	ANSI/ASME B31.1[6]
30XJR10/20/30/40	Exhaust System, Bypass Valve and Duct	S	C	I	Yes	UBP	ASME Class 3[3]
30XJN10/20/30/40	Fuel Oil System	S	C	I	Yes	UBP	ASME Class 3[3]
30XJG10/20/30/40	Jacket Water Standby Heater Circuit	NS-AQ	D	II	~~No~~Yes	UBP	ANSI/ASME B31.1[6]
30XJV10/20/30/40	Lube Oil Keepwarm/ Prelube Circuit	NS-AQ	D	II	~~No~~Yes	UBP	ANSI/ASME B31.1[6]
30XJV10/20/30/40	Lube Oil System	S	C	I	Yes	UBP	ASME Class 3[3]
30XJA10/20/30/40 AN100A/B	Turbochargers	S	N/A	I	Yes	UBP	

Table 3.2.2-1—Classification Summary
Sheet 129 of 185

KKS System or Component Code	SSC Description	Safety Classification (Note 15)	Quality Group Classification	Seismic Category (Note 16)	10 CFR 50 Appendix B Program (Note 5)	Location (Note 17)	Comments/ Commercial Code
XJA, XKA, XJG, XJN, XJQ, XJR, XJR, XJX (50/80), CXN (50/51/80/81)	**Station Blackout Diesel Generator Set**						
30XKA50/80 AG001	AC Synchronous Generator	NS-AQ	N/A	NSC	No	UBA	IEEE 387, NEMA MG 1-2003, IEEE 112
30XJR50/80	Air Exhaust System	NS-AQ	D	NSC	No	UBA	ANSI/ASME B31.1[6]
30CXN50/80	Control Panels	NS-AQ	N/A	NSC	No	UBA	IEEE 420
30XJG50/80	Cooling Water System	NS-AQ	D	NSC	No	UBA	ANSI/ASME B31.1[6]
30XJA50/80 AV001	Diesel Engine (Excluding Engine-Driven Cooling, Lubrication, and Fuel Pumps)	NS-AQ	D	NSC	No	UBA	
30XJA50/80 AP100	Engine Governor	NS-AQ	D	NSC	No	UBA	
30XJQ50/80	Exhaust Gas and Air Intake System	NS-AQ	D	NSC	No	UBA	ANSI/ASME B31.1[6]
30XJN50/80	Fuel Oil System	NS-AQ	D	NSC	No	UBA	ANSI/ASME B31.1[6]
30XKA50/80 AH	Generator Space Heaters	NS	N/A	NSC	No	UBA	
30XKA50/80 CT	Generator Thermal Sensors	NS	N/A	NSC	No	UBA	

Table 3.2.2-1—Classification Summary
Sheet 130 of 185

KKS System or Component Code	SSC Description	Safety Classification (Note 15)	Quality Group Classification	Seismic Category (Note 16)	10 CFR 50 Appendix B Program (Note 5)	Location (Note 17)	Comments/ Commercial Code
30XJV50/80	Lube Oil System	NS-AQ	D	NSC	No	UBA	ANSI/ASME B31.1[6]
30XJX50/80	Starting Air System	NS-AQ	D	NSC	No	UBA	ANSI/ASME B31.1[6]
30XJA50/80 AN100A/B	Turbochargers	NS-AQ	D	NSC	No	UBA	
KPC	**Solid Waste System**						
KPC	All Other Equipment	NS-AQ	D	RS	No	UKS	RG 1.143
30KPC20 BB001	Concentrate Buffer Tank	NS-AQ	D	RS	No	UKS	RG 1.143
30KPC20 AP001	Concentrate Recirculation Pump	NS-AQ	D	RS	No	UKS	RG 1.143
30KPC50 AP001	Condensate Collection Pump	NS-AQ	D	RS	No	UKS	RG 1.143
30KPC50 BB001	Condensate Collection Tank	NS-AQ	D	RS	No	UKS	RG 1.143
30KPC30/40/50 BB001	Drum Drying Stations	NS-AQ	D	RS	No	UKS	RG 1.143
30KPC60 AP001	High Pressure Cleaning Device	NS-AQ	D	RS	No	UKS	RG 1.143
30KPC10 BB001	Resin Proportioning Tank	NS-AQ	D	RS	No	UKS	RG 1.143
30KPC50 BB002	Scrubber Tank	NS-AQ	D	RS	No	UKS	RG 1.143
30KPC60 BZ001	Vacuum Unit	NS-AQ	D	RS	No	UKS	RG 1.143

Table 3.2.2-1—Classification Summary
Sheet 131 of 185

KKS System or Component Code	SSC Description	Safety Classification (Note 15)	Quality Group Classification	Seismic Category (Note 16)	10 CFR 50 Appendix B Program (Note 5)	Location (Note 17)	Comments/ Commercial Code
KPK, KPF	**Liquid Waste Storage & Processing System**						
KPF, KPK	All Pumps	NS-AQ	D	RS	No	UKS	RG 1.143
KPF, KPK	All Tanks	NS-AQ	D	RS	No	UKS	RG 1.143
30KPK41/42/43/44 AM001	Chemical Tank Agitators	NS-AQ	D	RS	No	UKS	RG 1.143
30KPK31/32/33 AM001	Concentrate Tank Agitators	NS-AQ	D	RS	No	UKS	RG 1.143
30KPF51 AT001	Decanter with Filling Station (Centrifuge Plant)	NS-AQ	D	RS	No	UKS	RG 1.143
30KPF11 AC002	Evaporator	NS-AQ	D	RS	No	UKS	RG 1.143
30KPF11 AT001	Evaporator Column	NS-AQ	D	RS	No	UKS	RG 1.143
30KPF52 AT001	Separator (Centrifuge Plant)	NS-AQ	D	RS	No	UKS	RG 1.143
30KPF53 AM001	Sludge Tank Agitator	NS-AQ	D	RS	No	UKS	RG 1.143
30KPK11/12/13/14/ 15 AM001	Storage Tank Agitators	NS-AQ	D	RS	No	UKS	RG 1.143
30KPF11 AN001	Vapor Compressor	NS-AQ	D	RS	No	UKS	RG 1.143
KPF	Vendor Supplied Demineralizer System	NS-AQ	D	RS	No	UKS	RG 1.143

Table 3.2.2-1—Classification Summary
Sheet 132 of 185

KKS System or Component Code	SSC Description	Safety Classification (Note 15)	Quality Group Classification	Seismic Category (Note 16)	10 CFR 50 Appendix B Program (Note 5)	Location (Note 17)	Comments/ Commercial Code
KPL	**Gaseous Waste Processing System**						
30KPL30 BB001	Condensate Collecting Tank	NS-AQ	D	RS	No	UKA	RG 1.143, RW-IIa
30KPL84 BR004/005	Containment Isolation Piping	S	B	I	Yes	UFA, UJA	ASME Class 2[2]
30KPL85 BR006/007	Containment Isolation Piping	S	B	I	Yes	UFA, UJA	ASME Class 2[2]
30KPL84 AA002/003	Containment Isolation Valves	S	B	I	Yes	UFA, UJA	ASME Class 2[2]
30KPL85 AA003/004	Containment Isolation Valves	S	B	I	Yes	UFA, UJA	ASME Class 2[2]
30KPL85 AA202	Containment Penetration Test Connection Isolation Valve	S	B	I	Yes	UJA	ASME Class 2[2]
30KPL50 AT001-003	Delay Beds	NS-AQ	D	RS	No	UKA	RG 1.143, RW-IIa
30KPL11 AC001	Gas Cooler	NS-AQ	D	RS	No	UKA	RG 1.143, RW-IIa
30KPL01 AC001	Gas Drier	NS-AQ	D	RS	No	UKA	RG 1.143, RW-IIa
30KPL70 AT001	Gas Filter	NS-AQ	D	RS	No	UKA	RG 1.143, RW-IIa
30KPL40 AT001	Gel Drier	NS-AQ	D	RS	No	UKA	RG 1.143, RW-IIa
30KPL05 AN003	Measuring Gas Compressor	NS-AQ	D	RS	No	UKA	RG 1.143, RW-IIa

Table 3.2.2-1—Classification Summary
Sheet 133 of 185

KKS System or Component Code	SSC Description	Safety Classification (Note 15)	Quality Group Classification	Seismic Category (Note 16)	10 CFR 50 Appendix B Program (Note 5)	Location (Note 17)	Comments/ Commercial Code
30KPL05/06 AN001/ 002	Measuring Gas Compressors	NS-AQ	D	RS	No	UKA	RG 1.143, RW-IIa
30KPL05/06 AC001	Measuring Gas Driers	NS-AQ	D	RS	No	UKA	RG 1.143, RW-IIa
30KPL30 AC001	Pre-drier	NS-AQ	D	RS	No	UKA	RG 1.143, RW-IIa
30KPL11 AT001	Recombiner	NS-AQ	D	RS	No	UKA	RG 1.143, RW-IIa
KPL	Remaining Piping	NS-AQ	D	RS	No	UJA, UJH, UFA, UKA	RG 1.143, RW-IIa
KPL	Remaining Valves	NS-AQ	D	RS	No	UJA, UJH, UFA, UKA	RG 1.143, RW-IIa
30KPL21/22 AC001	Sealing Liquid Coolers	NS-AQ	D	RS	No	UKA	RG 1.143, RW-IIa
30KPL21/22 BB001	Sealing Liquid Tanks	NS-AQ	D	RS	No	UKA	RG 1.143, RW-IIa
30KPL21/22 AN001	Waste Gas Compressors	NS-AQ	D	RS	No	UKA	RG 1.143, RW-IIa
KLK	**Sampling Activity Monitoring Systems**						
30KLK70/90 AN	Compressor Fan Units KLK70 AN005, KLK70 AN006, KLK90 AN003, and KLK90 AN004	NS	E	NSC	No	UKA	ANSI/ASME B31.1[6]

Table 3.2.2-1—Classification Summary
Sheet 134 of 185

KKS System or Component Code	SSC Description	Safety Classification (Note 15)	Quality Group Classification	Seismic Category (Note 16)	10 CFR 50 Appendix B Program (Note 5)	Location (Note 17)	Comments/ Commercial Code
KLK	KLK System mechanical components used to support the Leak Detection System (30KLK05)	NS-AQ	D	I	Yes	UJA	ANSI/ASME B31.1[6]
30KLK10/12/20/37 BR001/002 30KLK12 AA001/002 30KLK20/37 AH001/002	KLK System mechanical components that physically interface with safety related HVAC ducts	NS-AQ	D	II	Yes	UFA	ANSI/ASME B31.1[6]
KLK	Remainder of KLK System Mechanical Components	NS	E	NSC	No	UFA, UJA, UJK, UKA, UKE, UKS	ANSI/ASME B31.1[6]
30KLK65/66 CR001/002	Radioactivity Monitors	S	N/A	I	Yes	UJK	
30KLK05 CR001/031/071/561	Radioactivity Monitors Used to Support the Leak Detection System	NS-AQ	N/A	I	Yes	UJA	
30KLK13/21/37/38 CR001/002	Radioactivity monitors that physically interface with safety related HVAC ducts	NS-AQ	N/A	II	Yes	UFA	

Table 3.2.2-1—Classification Summary
Sheet 135 of 185

KKS System or Component Code	SSC Description	Safety Classification (Note 15)	Quality Group Classification	Seismic Category (Note 16)	10 CFR 50 Appendix B Program (Note 5)	Location (Note 17)	Comments/ Commercial Code
KLK	Remainder of KLK System Radioactivity Monitors	NS	N/A	NSC	No	UFA, UJA, UJK, UKA, UKE, UKS	
POWER CONVERSION SYSTEMS							
LB, MAN	**Main Steam System**						
30LBA13/23/33/43 BP701	Flow Orifices	NS-AQ	D	II	Yes	UJE	ANSI/ASME B31.1[6]
30LBA10/20/30/40 AA342-344	Flow Transmitter Isolation Valves	S	B	I	Yes	UJA	ASME Class 2[2]
30LBA10/20/30/40 AA441	Main Steam Isolation Bypass Drain Valves - 1	S	B	I	Yes	UJE	ASME Class 2[2]
30LBA10/20/30/40 AA442	Main Steam Isolation Bypass Drain Valves - 2	S	C	I	Yes	UJE	ASME Class 3[3]
30LBA10/20/30/40 AA444	Main Steam Isolation Bypass Drain Valves - 3	S	C	I	Yes	UJE	ASME Class 3[3]
30LBA14/24/34/44 CG101	Main Steam Isolation Bypass Shutoff Valve 2 Position Sensors	NS-AQ	N/A	II	Yes	UJE	
30LBA10/20/30/40 AA002	Main Steam Isolation Valves	S	B	I	Yes	UJE	ASME Class 2[2]
30LBA10/20/30/40 BR442/443/444	Main Steam Piping	S	C	I	Yes	UJE	ASME Class 3[3]

Table 3.2.2-1—Classification Summary
Sheet 136 of 185

KKS System or Component Code	SSC Description	Safety Classification (Note 15)	Quality Group Classification	Seismic Category (Note 16)	10 CFR 50 Appendix B Program (Note 5)	Location (Note 17)	Comments/ Commercial Code
30LBA10/20/30/40 BR445	Main Steam Piping	NS-AQ	D	II	Yes	UJE	ANSI/ASME B31.1[6]
30LBA11/21/31/41 BR441	Main Steam Piping	NS-AQ	D	II	Yes	UJE	ANSI/ASME B31.1[6]
30LBA12/22/32/42 BR441	Main Steam Piping	NS-AQ	D	II	Yes	UJE	ANSI/ASME B31.1[6]
30LBA13/23/33/43 BR301	Main Steam Piping	NS-AQ	D	II	Yes	UJE	ANSI/ASME B31.1[6]
30LBA13/23/33/43 BR441/442	Main Steam Piping	NS-AQ	D	II	Yes	UJE	ANSI/ASME B31.1[6]
30LBA14/24/34/44 BR002	Main Steam Piping	S	C	I	Yes	UJE	ASME Class 3[3]
30LBA13/23/33/43 CG807-809	Main Steam Relief Control Valve Position Sensors	S	N/A	I	Yes	UJE	
30LBA13/23/33/43 AA101	Main Steam Relief Control Valves	S	B	I	Yes	UJE	ASME Class 2[2]
30LBA13/23/33/43 AA001	Main Steam Relief Isolation Valves	S	B	I	Yes	UJE	ASME Class 2[2]
30LBA11/21/31/41 CG191	Main Steam Safety Valve Position Sensors	S	N/A	I	Yes	UJE	
30LBA12/22/32/42 CG191	Main Steam Safety Valve Position Sensors	S	N/A	I	Yes	UJE	

Table 3.2.2-1—Classification Summary
Sheet 137 of 185

KKS System or Component Code	SSC Description	Safety Classification (Note 15)	Quality Group Classification	Seismic Category (Note 16)	10 CFR 50 Appendix B Program (Note 5)	Location (Note 17)	Comments/ Commercial Code
30LBA11/21/31/41 AA191	Main Steam Safety Valves	S	B	I	Yes	UJE	ASME Class 2[2]
30LBA12/22/32/42 AA191	Main Steam Safety Valves	S	B	I	Yes	UJE	ASME Class 2[2]
30JMK10 BQ110	Main Steam Train 1 Containment Penetration	S	B	I	Yes	UJA	ASME Class 2[2]
30JMK20 BQ208	Main Steam Train 2 Containment Penetration	S	B	I	Yes	UJA	ASME Class 2[2]
30JMK30 BQ307	Main Steam Train 3 Containment Penetration	S	B	I	Yes	UJA	ASME Class 2[2]
30JMK40 BQ410	Main Steam Train 4 Containment Penetration	S	B	I	Yes	UJA	ASME Class 2[2]
30LBA14/24/34/44 AA101	Main Steam Warming Control Valves (MSWCV)	S	C	I	Yes	UJE	ASME Class 3[3]
30LBA14/24/34/44 AA001	Main Steam Warming Isolation Valves (MSWIV)	S	B	I	Yes	UJE	ASME Class 2[2]
30LBA13/23/33/43 BR003	MSRT Discharge Piping	S	C	I	Yes	UJE	ASME Class 3[3]

Table 3.2.2-1—Classification Summary
Sheet 138 of 185

KKS System or Component Code	SSC Description	Safety Classification (Note 15)	Quality Group Classification	Seismic Category (Note 16)	10 CFR 50 Appendix B Program (Note 5)	Location (Note 17)	Comments/ Commercial Code
30LBA11/21/31/41 BR192	MSSV Discharge Piping	S	C	I	Yes	UJE	ASME Class 3[3]
30LBA12/22/32/42 BR192	MSSV Discharge Piping	S	C	I	Yes	UJE	ASME Class 3[3]
30LBA10/20/30/40 AA311/321/331/341	Pressure Transmitter Isolation Valves	S	B	I	Yes	UJE	ASME Class 2[2]
30LBA13/23/33/43 AA301	Pressure Transmitter Isolation Valves	NS-AQ	D	II	Yes	UJE	ANSI/ASME B31.1[6]
30LBA10/20/30/40 CP401	Pressure Transmitters - Acceptance Testing - Pressure Retaining Parts Only	NS-AQ	D	II	Yes	UJE	ANSI/ASME B31.1[6]
30LBA13/23/33/43 CP401	Pressure Transmitters - Acceptance Testing - Pressure Retaining Parts Only	NS-AQ	D	II	Yes	UJE	ANSI/ASME B31.1[6]
30LBA10/20/30/40 CP811/821/831/841	Pressure Transmitters - Reactor Safety	S	B	I	Yes	UJE	ASME Class 2[2]
30LBA10/20/30/40 CR811/821/831/841	Radiation Monitors - Reactor Safety	S	N/A	I	Yes	UJE	

Table 3.2.2-1—Classification Summary
Sheet 139 of 185

KKS System or Component Code	SSC Description	Safety Classification (Note 15)	Quality Group Classification	Seismic Category (Note 16)	10 CFR 50 Appendix B Program (Note 5)	Location (Note 17)	Comments/ Commercial Code
30LBA13/23/33/43 BS001	Silencers	S	C	I	Yes	UZT (Roof of 1UJE, 4UJE)	ASME Class 3[3]
30LBA10/20/30/40 CT401	Temperature Sensors - Acceptance Testing - Thermowell Only	S	B	I	Yes	UJE	ASME Class 2[2]
30LBA10/20/30/40 CT002	Temperature Sensors - Binary Measurement - Thermowell Only	S	B	I	Yes	UJE	ASME Class 2[2]
30LBA10/20/30/40 AA501/502	Vent Isolation Valves	S	B	I	Yes	UJA	ASME Class 2[2]
30MAN11/13/21/23/ 31/33 AA051	Turbine Bypass Valves	NS	E	NSC	No	UMA	ANSI/ASME B31.1[6]
LBA	Main Steam Piping 30LBA/10/20/30/40 BR001/002 and Other Piping Directly Connected within UJA, UJE, and UJH	S	B	I	Yes	UJA, UJE, UJH	ASME Class 2 [2]
LBA	Balance of LBA Piping within UJA, UJE, and UJH (Miscellaneous Vents and Drains, etc.)	NS-AQ	D	II	Yes	UJA, UJE, UJH	ANSI/ASME B31.1[6]

Table 3.2.2-1—Classification Summary
Sheet 140 of 185

KKS System or Component Code	SSC Description	Safety Classification (Note 15)	Quality Group Classification	Seismic Category (Note 16)	10 CFR 50 Appendix B Program (Note 5)	Location (Note 17)	Comments/ Commercial Code
LB	Balance of LB System	NS	E	NSC	No	UMA, UMY	ANSI/ASME B31.1[6]
MAA, MAB, MAC	**Main Turbine Generator**	NS	E	NSC	No	UMA	
LCQ	**Steam Generator Blowdown System**						
LCQ	All LCQ Piping and Valves in 32UJE Downstream of Outer Containment Isolation Valve	NS	D	CS	Yes	2UJE	ANSI/ASME B31.3[9], RG 1.143, RW-IIc
LCQ	All LCQ Piping and Valves in 34UJH Downstream of Outer Containment Isolation Valve	NS-AQ	D	II	Yes	4UJH	ANSI/ASME B31.3[9], RG 1.143; Safety-Related piping in close proximity
30LCQ51 AC001/ 002	First Stage Blowdown Coolers	S	B	I	Yes	UJA	ASME Class 2[2]
30LCQ51 AA002	Inner Containment Isolation Valve	S	B	I	Yes	UJA	ASME Class 2[2]
30LCQ52 AA001	Inner Containment Isolation Valve	S	B	I	Yes	UJA	ASME Class 2[2]
30LCQ51 AA003	Outer Containment Isolation Valve	S	B	I	Yes	4UJH	ASME Class 2[2]
30LCQ52 AA002	Outer Containment Isolation Valve	S	B	I	Yes	2UJE	ASME Class 2[2]

Table 3.2.2-1—Classification Summary
Sheet 141 of 185

KKS System or Component Code	SSC Description	Safety Classification (Note 15)	Quality Group Classification	Seismic Category (Note 16)	10 CFR 50 Appendix B Program (Note 5)	Location (Note 17)	Comments/ Commercial Code
30LCQ51 AC003/ 004	Second Stage Blowdown Coolers	NS	D	CS	No	UKA	ASME VIII[8], RG 1.143, RW-IIc
30LCQ50 BB001	Steam Generator Blowdown Flash Tank	S	B	I	Yes	UJA	ASME Class 2[2]
30LCQ52 AA191	Steam Generator Blowdown Flash Tank Safety Relief Valve	S	B	I	Yes	UJA	ASME Class 2[2]
30LCQ10/20/30/40 AA104	Steam Generator Blowdown Flow Rate Adjusting Valves	S	B	I	Yes	UJA	ASME Class 2[2]
30LCQ10/20/30/40 AA002	Steam Generator Cold Leg Blowdown Isolation Valves	S	B	I	Yes	UJA	ASME Class 2[2]
30LCQ10/20/30/40 AA003	Steam Generator Common Leg Blowdown Isolation Valves	S	B	I	Yes	UJA	ASME Class 2[2]
30LCQ10/20/30/40 AA001	Steam Generator Hot Leg Blowdown Isolation Valves	S	B	I	Yes	UJA	ASME Class 2[2]
LCQ	UMY, UMZ, UKA and UMA Piping and Valves	NS	D	CS	No	UMY, UMZ, UMA, UKA	ASME VIII[8], RG 1.143, RW-IIc

Table 3.2.2-1—Classification Summary
Sheet 142 of 185

KKS System or Component Code	SSC Description	Safety Classification (Note 15)	Quality Group Classification	Seismic Category (Note 16)	10 CFR 50 Appendix B Program (Note 5)	Location (Note 17)	Comments/ Commercial Code
LA	**Feedwater System**						
LA	Balance of Feedwater System	NS	E	NSC	No	UMY, UMA	ANSI/ASME B31.1[6], ANSI/ASME B16.34[7], ASME VIII[8]
30LAB60/70/80/90 AA003	Check Valves Upstream of Steam Generators	S	B	I	Yes	UJA	ASME Class 2[2]
30LAB64/74/84/94 AA301/302	Differential Pressure Transmitter Isolation Valves	S	C	I	Yes	UJE	ASME Class 3[3]
30LAB60/70/80/90 CP209	Differential Pressure Transmitters Across FLCVs	NS	E	NSC	No	UJE	ANSI/ASME B31.1[6]
30LAB64/74/84/94 CP701-703	Differential Pressure Transmitters Across VLLCVs	NS	E	NSC	No	UJE	ANSI/ASME B31.1[6]
30LAB60/70/80/90 AA309/310	Differential Pressure Transmitters Isolation Valves	S	C	I	Yes	UJE	ASME Class 3[3]
30LAB60/70/80/90 AA401	Drain Valves Downstream of FLCVs	S	C	I	Yes	UJE	ASME Class 3[3]

Table 3.2.2-1—Classification Summary
Sheet 143 of 185

KKS System or Component Code	SSC Description	Safety Classification (Note 15)	Quality Group Classification	Seismic Category (Note 16)	10 CFR 50 Appendix B Program (Note 5)	Location (Note 17)	Comments/ Commercial Code
30LAB60/70/80/90 AA403	Feedwater Drain Valves Between Check Valves and SGs	S	B	I	Yes	UJA	ASME Class 2[2]
30JMK60/70/80/90 BQ109	Feedwater Line Containment Penetrations	S	B	I	Yes	UJB	ASME Class 2[2]
30LAB60/70/80/90 BR307	Feedwater Piping	S	C	I	Yes	UJE	ASME Class 3[3]
30LAB60/70/80/90 BR309/310	Feedwater Piping	S	C	I	Yes	UJE	ASME Class 3[3]
30LAB60/70/80/90 BR401/501	Feedwater Piping	S	C	I	Yes	UJE	ASME Class 3[3]
30LAB60/70/80/90 BR403	Feedwater Piping	S	B	I	Yes	UJA	ASME Class 2[2]
30LAB64/74/84/94 BR301/302	Feedwater Piping	S	C	I	Yes	UJE	ASME Class 3[3]
LAB	Feedwater Piping From Fix Point to MFWIV	S	C	I	Yes	UJK, UJE	ASME Class 3[3]
LAB	Feedwater Piping From MFWIV to SG Nozzle	S	B	I	Yes	UJE, UJB, UJA	ASME Class 2[2]

Table 3.2.2-1—Classification Summary
Sheet 144 of 185

KKS System or Component Code	SSC Description	Safety Classification (Note 15)	Quality Group Classification	Seismic Category (Note 16)	10 CFR 50 Appendix B Program (Note 5)	Location (Note 17)	Comments/ Commercial Code
30LAB60/70/80/90 GC701-703	Full Load Control Valve Position Sensors	NS-AQ	D	II	Yes	UJE	ANSI/ASME B31.1[6]
30LAB60/70/80/90 AA101	Full Load Control Valves	S	C	I	Yes	UJE	ASME Class 3[3]
30LAB60/70/80/90 AA001	Full Load Isolation Valves	S	C	I	Yes	UJE	ASME Class 3[3]
30LAB64/74/84/94 CG701-703	Low Load Control Valve Position Sensors	NS-AQ	D	II	Yes	UJE	ANSI/ASME B31.1[6]
30LAB64/74/84/94 AA101	Low Load Control Valves	S	C	I	Yes	UJE	ASME Class 3[3]
30LAB64/74/84/94 AA001	Low Load Isolation Valves	S	C	I	Yes	UJE	ASME Class 3[3]
30LAB60/70/80/90 AA002	Main Isolation Valves	S	B	I	Yes	UJE	ASME Class 2[2]
30LAB60/70/80/90 CP407	Pressure Transmitter Downstream of Flow Meters	NS	E	NSC	No	UJE	ANSI/ASME B31.1[6]
30LAB60/70/80/90 AA307	Pressure Transmitter Isolation Valves	S	C	I	Yes	UJE	ASME Class 3[3]
30LAB60/70/80/90 CT708	Temperature Sensor Downstream of Flow Meters	S	C	I	Yes	UJE	ASME Class 3[3]

Table 3.2.2-1—Classification Summary
Sheet 145 of 185

KKS System or Component Code	SSC Description	Safety Classification (Note 15)	Quality Group Classification	Seismic Category (Note 16)	10 CFR 50 Appendix B Program (Note 5)	Location (Note 17)	Comments/ Commercial Code
30LAB60/70/80/90 CT762	Temperature Sensors Downstream of FL/ LL Junctions	S	C	I	Yes	UJE	ASME Class 3[3]
30LAB60/70/80/90 CT763	Temperature Sensors Downstream of FL/ LL Junctions	S	B	I	Yes	UJE	ASME Class 2[2]
30LAB60/70/80/90 AA501	Vent Valves Downstream of FLCVs	S	C	I	Yes	UJE	ASME Class 3[3]
30LAB64/74/84/94 CG704-706	Very Low Load Control Valve Position Sensors	NS-AQ	D	II	Yes	UJE	ANSI/ASME B31.1[6]
30LAB64/74/84/94 AA102	Very Low Load Control Valves	S	C	I	Yes	UJE	ASME Class 3[3]
MAG	**Main Condenser**	NS	E	NSC	No	UMA	
LC, LD	**Condensate System**						
LC	Balance of Condensate Piping Inside Containment	NS-AQ	D	II	Yes	UJA	ANSI/ASME B31.1[6]
LC	Balance of Condensate Piping, Excluding Condensate Polishing	NS	E	NSC	No	UMY, UMA	ANSI/ASME B31.1[6], ANSI/ASME B16.34[7], ASME VIII[8]

Table 3.2.2-1—Classification Summary
Sheet 146 of 185

KKS System or Component Code	SSC Description	Safety Classification (Note 15)	Quality Group Classification	Seismic Category (Note 16)	10 CFR 50 Appendix B Program (Note 5)	Location (Note 17)	Comments/ Commercial Code
30LCA90 AA403/ 408	Condensate Drain Second Isolation Valves	NS	E	NSC	No	2UJE	ANSI/ASME B31.1[6]
30LCA90 AA406/ 410	Condensate Drain Second Isolation Valves	NS-AQ	D	II	Yes	UJA	ANSI/ASME B31.1[6]
30JMK10 BQ304/305	Condensate Line Containment Penetrations	S	B	I	Yes	UJB	ASME Class 2[2]
LC	Condensate Piping Associated With Containment Penetrations	S	B	I	Yes	UJA	ASME Class 2[2]
LC	Condensate Piping From 32UJE to Deaerator	NS	E	NSC	No	UMY, UMA	ANSI/ASME B31.1[6], ANSI/ASME B16.34[7], ASME VIII[8]
LD	Condensate Polishing	NS	E	NSC	No	UMA	ANSI/ASME B31.1[6], ANSI/ASME B16.34[7], ASME VIII[8]
30LCA90 AA511	Condensate Vent Isolation Valve	NS-AQ	D	II	Yes	UJA	ANSI/ASME B31.1[6]
30LCA90 AA503/ 508	Condensate Vent Isolation Valves	NS	E	NSC	No	2UJE	ANSI/ASME B31.1[6]

Table 3.2.2-1—Classification Summary
Sheet 147 of 185

KKS System or Component Code	SSC Description	Safety Classification (Note 15)	Quality Group Classification	Seismic Category (Note 16)	10 CFR 50 Appendix B Program (Note 5)	Location (Note 17)	Comments/ Commercial Code
30LCA90 AA009	First Stage Blowdown Cooler Bypass Valve	NS-AQ	D	II	Yes	UJA	ANSI/ASME B31.1[6]
30LCA90 AA015-017	First Stage Blowdown Cooler Bypass Valves	NS-AQ	D	II	Yes	UJA	ANSI/ASME B31.1[6]
30LCA90 AA030/031	First Stage Blowdown Cooler Bypass Valves	NS-AQ	D	II	Yes	UJA	ANSI/ASME B31.1[6]
30LCA90 AA401/402	First Stage Blowdown Cooler Drain Isolation Valves	NS-AQ	D	II	Yes	UJA	ANSI/ASME B31.1[6]
30LCA90 AA501/502	First Stage Blowdown Cooler Vent Isolation Valves	NS-AQ	D	II	Yes	UJA	ANSI/ASME B31.1[6]
30LCA90 AA301-304	Flow Transmitter Isolation Valves	NS	E	NSC	No	2UJE	ANSI/ASME B31.1[6]
30LCA90 AA311-314	Flow Transmitter Isolation Valves	NS	E	NSC	No	2UJE	ANSI/ASME B31.1[6]
30LCA90 CF001/002/011/012	Flow Transmitters	NS	E	NSC	No	2UJE	ANSI/ASME B31.1[6]
30LCA90 AA002	Inbound Condensate Isolation Valve	NS	E	NSC	No	2UJE	ANSI/ASME B31.1[6]

Table 3.2.2-1—Classification Summary
Sheet 148 of 185

KKS System or Component Code	SSC Description	Safety Classification (Note 15)	Quality Group Classification	Seismic Category (Note 16)	10 CFR 50 Appendix B Program (Note 5)	Location (Note 17)	Comments/ Commercial Code
LC	Inbound Condensate Piping in 32UJE	NS	E	NSC	No	2UJE	ANSI/ASME B31.1[6]
30LCA90 AA004	Inbound Containment Isolation Valve - Inside Containment	S	B	I	Yes	UJA	ASME Class 2[2]
30LCA90 AA003	Inbound Containment Isolation Valve - Outside Containment	S	B	I	Yes	2UJE	ASME Class 2[2]
30LCA90 CG004	Inside Containment Isolation Valve Position Sensor	S	B	I	Yes	UJA	
LC	Inside Containment Relief Valve Discharge Piping	NS-AQ	D	II	Yes	UJA	ANSI/ASME B31.1[6]
30LCA90 AA305	Leak Test Valve	S	B	I	Yes	UJA	ASME Class 2[2]
30LCA90 AA306/ 307	Leak Test Valves	NS-AQ	D	II	Yes	UJA	ANSI/ASME B31.1[6]
30LCA90 AA010	Outbound Condensate Check Valve	NS	E	NSC	No	UMA	ANSI/ASME B31.1[6]

Table 3.2.2-1—Classification Summary
Sheet 149 of 185

KKS System or Component Code	SSC Description	Safety Classification (Note 15)	Quality Group Classification	Seismic Category (Note 16)	10 CFR 50 Appendix B Program (Note 5)	Location (Note 17)	Comments/ Commercial Code
30LCA90 AA007	Outbound Condensate Isolation Valve	NS	E	NSC	No	2UJE	ANSI/ASME B31.1[6]
LC	Outbound Condensate Piping in 32UJE	NS	E	NSC	No	2UJE	ANSI/ASME B31.1[6]
30LCA90 AA101	Outbound Condensate Temperature Control Valve	NS	E	NSC	No	UMA	ANSI/ASME B31.1[6]
30LCA90 AA005	Outbound Containment Isolation Valve - Inside Containment	S	B	I	Yes	UJA	ASME Class 2[2]
30LCA90 AA006	Outbound Containment Isolation Valve - Outside Containment	S	B	I	Yes	2UJE	ASME Class 2[2]
30LCA90 AA195	Pressure Relief Valve	S	B	I	Yes	UJA	ASME Class 2[2]
30LCA90 AA182/ 184/186/188/191	Pressure Relief Valves	NS-AQ	D	II	Yes	UJA	ASME VIII[8]
30LCA90 AA310	Pressure Transmitter Isolation Valve	NS-AQ	D	II	Yes	UJA	ANSI/ASME B31.1[6]

Table 3.2.2-1—Classification Summary
Sheet 150 of 185

KKS System or Component Code	SSC Description	Safety Classification (Note 15)	Quality Group Classification	Seismic Category (Note 16)	10 CFR 50 Appendix B Program (Note 5)	Location (Note 17)	Comments/ Commercial Code
30LCA90 AA320/ 330	Pressure Transmitter Isolation Valve	NS-AQ	D	II	Yes	UJA	ANSI/ASME B31.1[6]
30LCA90 CP002/ 402/501	Pressure Transmitters	NS-AQ	D	II	Yes	UJA	ANSI/ASME B31.1[6]
30LCA90 CT001/002	Temperature Transmitters	NS-AQ	D	II	Yes	UJA	ANSI/ASME B31.1[6]
30LCA90 CT401-403	Temperature Transmitters	NS-AQ	D	II	Yes	UJA	ANSI/ASME B31.1[6]
QU	**Secondary Sampling System**						
QUC	Balance of QUC System	NS	E	NSC	No	UFA, UKA	ANSI/ASME B31.1[6]
QUS	Circulating Water Sampling System	NS	E	NSC	No	UQA	ANSI/ASME B31.1[6]
QUE	Condensate Sampling Systems	NS	E	NSC	No	UMA	ANSI/ASME B31.1[6]
QUP	Cooling System for Secondary Samples	NS	E	NSC	No	UMA	ANSI/ASME B31.1[6]
QUG	Demineralized Water Supply Sampling System	NS	E	NSC	No	UBA	ANSI/ASME B31.1[6]
QUA	Feedwater Sampling System	NS	E	NSC	No	UMA	ANSI/ASME B31.1[6]
QUB	Main Steam Sampling System	NS	E	NSC	No	UMA	ANSI/ASME B31.1[6]

Table 3.2.2-1—Classification Summary
Sheet 151 of 185

KKS System or Component Code	SSC Description	Safety Classification (Note 15)	Quality Group Classification	Seismic Category (Note 16)	10 CFR 50 Appendix B Program (Note 5)	Location (Note 17)	Comments/ Commercial Code
QUD	Sampling System for Auxiliary Steam and Feedwater	NS	E	NSC	No	UMA	ANSI/ASME B31.1[6]
QUC	Sampling System for Steam Generator Blowdown System - Containment Penetrations, including Containment Isolation Valves	S	B	I	Yes	UJA, UFA	ASME Class 2[2]
QUC	Sampling System for Steam Generator Blowdown System - Tubing Up to Containment Penetrations	S	B	I	Yes	UJA	ASME Class 2[2]
MAJ	**Condenser Evacuation System**	NS	D	NSC	No	UMA	ANSI/ASME B31.1[6], ASME VIII[8], HEI[21]
MAW	**Turbine Gland Steam Sealing System**	NS	E	NSC	No	UMA	ANSI/ASME B31.1[6], ASME VIII[8]

Table 3.2.2-1—Classification Summary
Sheet 152 of 185

KKS System or Component Code	SSC Description	Safety Classification (Note 15)	Quality Group Classification	Seismic Category (Note 16)	10 CFR 50 Appendix B Program (Note 5)	Location (Note 17)	Comments/ Commercial Code
GD	**Steam Generator Blowdown Demineralizing System**						
GDA	Air Lines Connected to Backwash Air Vessel and Buffer Tank for Pneumatic Valves	NS	E	NSC	No	UKA	ANSI/ASME B31.1[6]
30GDA14 AT010	Backwash Air Vessel	NS	E	NSC	No	UKA	ASME VIII[8]
GDA	Balance of GDA Piping and Valves	NS	D	NSC	No	UKA	ANSI/ASME B31.3[9], RG 1.143
30GDA20 AT010	Buffer Tank for Pneumatic Valves	NS	E	NSC	No	UKA	ASME VIII[8]
30GDA10 AT010	Cartridge Filter	NS-AQ	D	CS	No	UKA	ASME VIII[8], RG 1.143, RW-IIc
30GDA10 AT001	Cation Exchanger	NS-AQ	D	CS	No	UKA	ASME VIII[8], RG 1.143, RW-IIc
30GDA13 AT012	Drain Buffer Tank	NS-AQ	D	CS	No	UKA	ASME VIII[8], RG 1.143, RW-IIc
30GDA10 AT002	Mixed Bed Exchanger	NS-AQ	D	CS	No	UKA	ASME VIII[8], RG 1.143, RW-IIc
30GDA10 AT011	Resin Trap	NS-AQ	D	CS	No	UKA	ASME VIII[8], RG 1.143, RW-IIc
30GDA13 AP001	Waste Water Pump	NS-AQ	D	CS	No	UKA	ASME VIII[8], RG 1.143, RW-IIc

Table 3.2.2-1—Classification Summary
Sheet 153 of 185

KKS System or Component Code	SSC Description	Safety Classification (Note 15)	Quality Group Classification	Seismic Category (Note 16)	10 CFR 50 Appendix B Program (Note 5)	Location (Note 17)	Comments/ Commercial Code
PA	**Circulating Water Supply System**	NS	E	NSC	No	UMA, UZT	
STRUCTURES							
UFA, UJA, UJB, UJH, UJK, UJE, JM	**Nuclear Island Structural System (Fuel, Reactor, Safeguard Buildings)**	S	N/A	I	Yes	UFA, UJA, UJB, UJH, UJK, UJE, JM	
JMK	Piping Containment Penetrations	S	B	I	Yes	UJA, UJB	ASME Class 2[2]
JML	Cable Containment Penetrations	S	B	I	Yes	UJA, UJB	ASME Class 2[2]
UJA	Safety-Related Reactor Building Doors	S	N/A	I	Yes	UJA	Must maintain structural integrity during SSE and opens on dif. pressure to support LBB and subcompartment analysis.
UJA	Non-Safety-Related Reactor Building Doors	NS-AQ	N/A	II	Yes	UJA	
UJA	Pressurizer Compartment Rupture Foils	NS-AQ	N/A	II	Yes	UJA	

Table 3.2.2-1—Classification Summary
Sheet 154 of 185

KKS System or Component Code	SSC Description	Safety Classification (Note 15)	Quality Group Classification	Seismic Category (Note 16)	10 CFR 50 Appendix B Program (Note 5)	Location (Note 17)	Comments/ Commercial Code
UBP	**Emergency Power Generating Buildings**	S	N/A	I	Yes	UBP	
URB	**Essential Service Water Cooling Tower Structures**	S	N/A	I	Yes	URB	
UQB	**Essential Service Water Pump Buildings**	S	N/A	I	Yes	UQB	
UKA	**Nuclear Auxiliary Building**	NS-AQ	N/A	RS, II	Yes	UKA	
PG	**Turbine Building Closed Cooling Water System**	NS	E	NSC	No	UMA, UZT	ASME B31.1[6], ASME VIII[8]
UKS	**Radioactive Waste Processing Building**	NS-AQ	N/A	RS	No	UKS	
UKH	**Vent Stack**	S	N/A	I	Yes	UKH	
[[UMA, UBA	Turbine Building (Switchgear Building)	NS-AQ	N/A	II	Yes	UMA, UBA]]	
[[UKE	Access Building	NS-AQ	N/A	II	Yes	UKE]]	
SM, SN	**Cranes, Hoists, and Elevators**						
SMJ06	Assembly Crane	NS-AQ	N/A	II	Yes	UJA	ASME NUM-1

Table 3.2.2-1—Classification Summary
Sheet 155 of 185

KKS System or Component Code	SSC Description	Safety Classification (Note 15)	Quality Group Classification	Seismic Category (Note 16)	10 CFR 50 Appendix B Program (Note 5)	Location (Note 17)	Comments/ Commercial Code
SM	Balance of Cranes and Hoists	NS	N/A	NSC	No	All	ASME NOG-1, ASME NUM-1
SMB11/12/21/31/41/42	Diesel Hall Cranes	NS-AQ	N/A	II	Yes	UBP	ASME NUM-1
SMK12	Drum Storage Area Crane	NS	N/A	NSC	No	UKS	ASME NOG-1
SN	Elevators	NS	N/A	NSC	No	UJA	ASME A17.1
SMK11	Entrance Area Crane	NS	N/A	NSC	No	UKS	ASME NOG-1
SMF02/03	Equipment Lock Cranes	NS-AQ	N/A	II	Yes	UFA	ASME NOG-1, ASME NUM-1
SMK01	Hot Workshop Crane	NS	N/A	NSC	No	UKA	ASME NOG-1
SMK13	Hot Workshop Crane	NS	N/A	NSC	No	UKS	ASME NOG-1
SMJ02/03/04/05	HVAC Equipment Room Cranes	NS-AQ	N/A	II	Yes	UJA	ASME NUM-1
SMJ32/33/34/35	Main Steam Valve Station Cranes	NS-AQ	N/A	II	Yes	UJH	ASME NUM-1
SMQ05/06/07/08	Pump Room Cranes	NS-AQ	N/A	II	Yes	UQB	ASME NUM-1
SMA01	Manual Hoists	NS	N/A	NSC	No	All	ANSI/ASME B30.11, ANSI/ ASME B30.21
SMZ01	Outdoor Crane	NS-AQ	N/A	II	Yes	UZT	ASME NOG-1

Table 3.2.2-1—Classification Summary
Sheet 156 of 185

KKS System or Component Code	SSC Description	Safety Classification (Note 15)	Quality Group Classification	Seismic Category (Note 16)	10 CFR 50 Appendix B Program (Note 5)	Location (Note 17)	Comments/ Commercial Code
SMJ01	Polar Crane	NS-AQ	N/A	II	Yes	UJA	ASME NOG-1
SMJ07/08/09/10	Steam Generator Cubicle Cranes	NS-AQ	N/A	II	Yes	UJA	ASME NUM-1
[[UBZ	**Buried Conduit Duct Bank**	S	N/A	I	Yes	UBZ]]	
HVAC SYSTEMS							
SAB	**Main Control Room Air Conditioning System**						
30SAB11/14 AT003	Carbon Adsorbers	S	C	I	Yes	UJK	ASME AG-1[14]
30SAB01/02/03/04 AT004	Demisters	S	C	I	Yes	UJK	ASME AG-1[14]
30SAB45 AA004	Downstream Exhaust Air Isolation Damper	S	C	I	Yes	UJK	ASME AG-1[14]
30SAB32 AH001-007	Electric Air Heaters	S	C	I	Yes	UJK	ASME AG-1[14]
SAB	Safety-Related Fire Dampers	S	C	I	Yes	UJK	NFPA 90A[18]
30SAB11/14 AH001	Electric Heater for Carbon Filter	S	C	I	Yes	UJK	ASME AG-1[14]
30SAB11/14 AA002	ESF Filter Train Backdraft Damper	S	C	I	Yes	UJK	ASME AG-1[14]
30SAB11/14 AA005	ESF Recirc Backdraft Damper	S	C	I	Yes	UJK	ASME AG-1 [14]
30SAB11/14 AN001	ESF Filter Train Fans	S	C	I	Yes	UJK	ASME AG-1[14]

Table 3.2.2-1—Classification Summary
Sheet 157 of 185

KKS System or Component Code	SSC Description	Safety Classification (Note 15)	Quality Group Classification	Seismic Category (Note 16)	10 CFR 50 Appendix B Program (Note 5)	Location (Note 17)	Comments/ Commercial Code
30SAB11/14 AA003	ESF Filter Train Isolation Dampers, Electric Operated	S	C	I	Yes	UJK	ASME AG-1[14]
30SAB45 AN001	Exhaust Fan	NS-AQ	D	II	Yes	UJK	ASME AG-1[14]
30SAB01/02/03/04 AT005	HEPA Filters	S	C	I	Yes	UJK	ASME AG-1[14]
30SAB11/14 AT002/ 004	HEPA Filters	S	C	I	Yes	UJK	ASME AG-1[14]
30SAB11/14 AA001	Isolation Dampers with Electric Actuators	S	C	I	Yes	UJK	ASME AG-1[14]
30SAB01/02/03/04 AA002	Outside Air Inlet Dampers with Electric Operators	S	C	I	Yes	UJK	ASME AG-1[14]
30SAB01/02/03/04 AH001	Outside Air Inlet Electric Heaters - 3 Stage	S	C	I	Yes	UJK	ASME AG-1[14]
30SAB01/02/03/04 AA003	Outside Air Inlet Isolation Dampers with Electric Actuators	S	C	I	Yes	UJK	ASME AG-1[14]
30SAB01/02/03/04 AT001	Outside Air Inlet Pre-Filters	S	C	I	Yes	UJK	ASME AG-1[14]

Table 3.2.2-1—Classification Summary
Sheet 158 of 185

KKS System or Component Code	SSC Description	Safety Classification (Note 15)	Quality Group Classification	Seismic Category (Note 16)	10 CFR 50 Appendix B Program (Note 5)	Location (Note 17)	Comments/ Commercial Code
30SAB01/02/03/04 AA006	Outside Air Inlet Volume Control Dampers, Manually Adjusted	S	C	I	Yes	UJK	ASME AG-1[14]
30SAB11/14 AT001	Pre-Filters	S	C	I	Yes	UJK	ASME AG-1[14]
30SAB01/02/03/04 AC001	Recirc Air Cooling Coils with Safety Chilled Water	S	C	I	Yes	UJK	ASME AG-1[14]
30SAB01/02/03/04 AA009	Recirculation Unit Isolation Dampers	S	C	I	Yes	UJK	ASME AG-1[14]
30SAB01/02/03/04 BS003	Silencers on Fan Discharge Side	S	C	I	Yes	UJK	ASME AG-1[14]
30SAB01/02/03/04 BS002	Silencers on Fan Suctions	S	C	I	Yes	UJK	ASME AG-1[14]
30SAB01/04 SD001	Smoke Detector	NS-AQ	D	II	~~No~~Yes	UJK	Local Bldg. Code
30SAB 01/02/03/04 SD002	Smoke Detector	NS-AQ	D	II	~~No~~Yes	UJK	Local Bldg. Code
30SAB01/04 TG001	Toxic Gas Sensor	S	C	I	Yes	UJK	ASME AG-1[14]
30SAB01/02/03/04 AN001	Supply Air Fans	S	C	I	Yes	UJK	ASME AG-1[14]
30SAB45 AA003	Upstream Exhaust Air Isolation Damper	S	C	I	Yes	UJK	ASME AG-1[14]

Table 3.2.2-1—Classification Summary
Sheet 159 of 185

KKS System or Component Code	SSC Description	Safety Classification (Note 15)	Quality Group Classification	Seismic Category (Note 16)	10 CFR 50 Appendix B Program (Note 5)	Location (Note 17)	Comments/ Commercial Code
30SAB01/02/03/04 AA010	Volume Control Dampers, Manually Adjusted for Recirc Unit	S	C	I	Yes	UJK	ASME AG-1[14]
30SAB01/04 AA012	Pressure Control Damper	S	C	I	Yes	UJK	ASME AG-1[14]
SAC	**Electrical Division of Safeguard Building Ventilation System**						
30SAC05/08 AC001	Air Cooling Coils - Maintenance Train Supply Air	NS	E	NSC	No	1UJK, 4UJK	
30SAC61/62/63/64 AC001/002	Air Cooling Coils - Recirculation Cooling Units	S	C	I	Yes	UJK	ASME AG-1[14]
30SAC01/02/03/04 AC001	Air Cooling Coils - Supply Air System	S	C	I	Yes	UJK	ASME AG-1[14]
30SAC11/14 AH002	Battery Room Air Supply Duct Heaters - Supply and Exhaust Air Shafts	S	C	I	Yes	1UJK, 4UJK	ASME AG-1[14]
30SAC11/12/13/14 AH001	Battery Room Air Supply Duct Heaters - Supply and Exhaust Air Shafts	S	C	I	Yes	UJK	ASME AG-1[14]
SAC	Electric Air Heating Convectors	NS	E	NSC	No	UJK	

Table 3.2.2-1—Classification Summary
Sheet 160 of 185

KKS System or Component Code	SSC Description	Safety Classification (Note 15)	Quality Group Classification	Seismic Category (Note 16)	10 CFR 50 Appendix B Program (Note 5)	Location (Note 17)	Comments/ Commercial Code
30SAC05/08 AH002	Electric Heaters - Maintenance Train Supply Air	NS	E	NSC	No	1UJK, 4UJK	
30SAC01/02/03/04 AH002	Electric Heaters - Supply Air System	S	C	I	Yes	UJK	ASME AG-1[14]
30SAC51/52/53/54 AN001	Exhaust Air Fans - Battery/SCWS Room Exhaust	S	C	I	Yes	UJK	ASME AG-1[14]
30SAC51/54 AN002	Exhaust Air Fans - Maintenance Train Battery/SCWS Room Exhaust	NS	E	NSC	No	1UJK, 4UJK	
30SAC35/38 AN001	Exhaust Fan - Maintenance Train Exhaust Air	NS	E	NSC	No	1UJK, 4UJK	
30SAC31/32/33/35 AN001	Exhaust Fans - Exhaust Air System	S	C	I	Yes	UJK	ASME AG-1[14]
30SAC01/02/03/04 AH003/004	Humidifier Heaters - Supply Air System	S	C	I	Yes	UJK	ASME AG-1[14]
30SAC05/08 AC003/ 004	Humidifier Spray Nozzles - Maintenance Train Supply Air	NS	E	NSC	No	1UJK, 4UJK	

Table 3.2.2-1—Classification Summary
Sheet 161 of 185

KKS System or Component Code	SSC Description	Safety Classification (Note 15)	Quality Group Classification	Seismic Category (Note 16)	10 CFR 50 Appendix B Program (Note 5)	Location (Note 17)	Comments/ Commercial Code
30SAC01/02/03/04 AT007/008	Humidifier Spray Nozzles - Supply Air System	S	C	I	Yes	UJK	ASME AG-1[14]
30SAC05/08 AH003/004	Humidifiers Heaters - Maintenance Train Supply Air	NS	E	NSC	No	1UJK, 4UJK	
SAC	Maintenance Supply/ Exhaust Ducts	NS	E	NSC	No	UJK	
30SAC35/38 AA001/004	Manual Isolation Damper - Maintenance Train Exhaust Air	S	C	I	Yes	1UJK, 4UJK	ASME AG-1[14]
30SAC51/52/53/54 AA001	Manual Isolation Dampers - Battery/ SCWS Room Exhaust	S	C	I	Yes	UJK	ASME AG-1[14]
30SAC31/32/33/35 AA001/004	Manual Isolation Dampers - Exhaust Air System	S	C	I	Yes	UJK	ASME AG-1[14]
30SAC51/54 AA004	Manual Isolation Dampers - Maintenance Train Battery/SCWS Room Exhaust	S	C	I	Yes	1UJK, 4UJK	ASME AG-1[14]

Table 3.2.2-1—Classification Summary
Sheet 162 of 185

KKS System or Component Code	SSC Description	Safety Classification (Note 15)	Quality Group Classification	Seismic Category (Note 16)	10 CFR 50 Appendix B Program (Note 5)	Location (Note 17)	Comments/ Commercial Code
30SAC05/08 AA002	Manual Isolation Dampers - Maintenance Train Supply Air	S	C	I	Yes	1UJK, 4UJK	ASME AG-1[14]
30SAC01/02/03/04 AA002	Manual Isolation Dampers - Supply Air System	S	C	I	Yes	UJK	ASME AG-1[14]
30SAC11/15 AA003/ 005	Manual Isolation Dampers between Safety and Maintenance Trains	S	C	I	Yes	1UJK, 4UJK	ASME AG-1[14]
30SAC41/44 AA005	Manual Volume Control Dampers - Battery/SCWS Room Exhaust	S	C	I	Yes	1UJK, 4UJK	ASME AG-1[14]
30SAC42/43 AA004	Manual Volume Control Dampers - Battery/SCWS Room Exhaust	S	C	I	Yes	2UJK, 3UJK	ASME AG-1[14]
30SAC21/24 AA014	Manual Volume Control Dampers - Exhaust Air System	S	C	I	Yes	1UJK, 4UJK	ASME AG-1[14]
30SAC22/23 AA029	Manual Volume Control Dampers - Exhaust Air System	S	C	I	Yes	2UJK, 3UJK	ASME AG-1[14]

Table 3.2.2-1—Classification Summary
Sheet 163 of 185

KKS System or Component Code	SSC Description	Safety Classification (Note 15)	Quality Group Classification	Seismic Category (Note 16)	10 CFR 50 Appendix B Program (Note 5)	Location (Note 17)	Comments/ Commercial Code
30SAC21/22/23/24 AA009	Manual Volume Control Dampers - Supply and Exhaust Air Shafts	S	C	I	Yes	UJK	ASME AG-1[14]
30SAC21/24 AA010	Manual Volume Control Dampers - Supply and Exhaust Air Shafts	S	C	I	Yes	1UJK, 4UJK	ASME AG-1[14]
30SAC22/23 AA009/ 011/012/020	Manual Volume Control Dampers - Supply and Exhaust Air Shafts	S	C	I	Yes	2UJK, 3UJK	ASME AG-1[14]
30SAC42/43 AA002	Manual Volume Control Dampers - Supply and Exhaust Air Shafts	S	C	I	Yes	2UJK, 3UJK	ASME AG-1[14]
30SAC11/14 AA013	Manual Volume Control Dampers - Supply and Exhaust Air Shafts	S	C	I	Yes	1UJK, 4UJK	ASME AG-1[14]
30SAC11/14 AA018/ 020/023	Manual Volume Control Dampers - Supply and Exhaust Air Shafts	S	C	I	Yes	1UJK, 4UJK	ASME AG-1[14]

Table 3.2.2-1—Classification Summary
Sheet 164 of 185

KKS System or Component Code	SSC Description	Safety Classification (Note 15)	Quality Group Classification	Seismic Category (Note 16)	10 CFR 50 Appendix B Program (Note 5)	Location (Note 17)	Comments/ Commercial Code
30SAC12/13 AA027/ 028/029/031	Manual Volume Control Dampers - Supply and Exhaust Air Shafts	S	C	I	Yes	2UJK, 3UJK	ASME AG-1[14]
30SAC11/12/13/14 AA001/014/025	Manual Volume Control Dampers - Supply and Exhaust Air Shafts	S	C	I	Yes	UJK	ASME AG-1[14]
30SAC05/08 AT006	Moisture Separators - Maintenance Train Supply Air	NS	E	NSC	No	1UJK, 4UJK	
30SAC61/62/63/64 AT001/002	Moisture Separators - Recirculation Cooling Units	S	C	I	Yes	UJK	ASME AG-1[14]
30SAC01/02/03/04 AT006	Moisture Separators - Supply Air System	S	C	I	Yes	UJK	ASME AG-1[14]
30SAC51/52/53/54 AA003	Motor Operated Isolation Dampers - Battery/SCWS Room Exhaust	S	C	I	Yes	UJK	ASME AG-1[14]
30SAC51/54 AA006	Motor Operated Isolation Dampers - Maintenance Train Battery/SCWS Room Exhaust	S	C	I	Yes	1UJK, 4UJK	ASME AG-1[14]

Table 3.2.2-1—Classification Summary
Sheet 165 of 185

KKS System or Component Code	SSC Description	Safety Classification (Note 15)	Quality Group Classification	Seismic Category (Note 16)	10 CFR 50 Appendix B Program (Note 5)	Location (Note 17)	Comments/ Commercial Code
30SAC35/38 AA002	Motor Operated Volume Control Damper - Maintenance Train Exhaust Air	NS	E	NSC	No	1UJK, 4UJK	
30SAC31/32/33/35 AA002	Motor Operated Volume Control Dampers - Exhaust Air System	S	C	I	Yes	UJK	ASME AG-1[14]
30SAC05/08 AA003/ 004	Motor Operated Volume Control Dampers - Maintenance Train Supply Air	NS	E	NSC	No	1UJK, 4UJK	
30SAC01/02/03/04 AA003/004	Motor Operated Volume Control Dampers - Supply Air System	S	C	I	Yes	UJK	ASME AG-1[14]
30SAC41/42/43/44 AA001	Motor Operated Volume Control Dampers - Supply and Exhaust Air Shafts	S	C	I	Yes	UJK	ASME AG-1[14]

Table 3.2.2-1—Classification Summary
Sheet 166 of 185

KKS System or Component Code	SSC Description	Safety Classification (Note 15)	Quality Group Classification	Seismic Category (Note 16)	10 CFR 50 Appendix B Program (Note 5)	Location (Note 17)	Comments/ Commercial Code
30SAC22/23 AA015	Motor Operated Volume Control Dampers - Supply and Exhaust Air Shafts	S	C	I	Yes	2UJK, 3UJK	ASME AG-1[14]
30SAC12/13 AA020	Motor Operated Volume Control Dampers - Supply and Exhaust Air Shafts	S	C	I	Yes	2UJK, 3UJK	ASME AG-1[14]
30SAC35/38 AA003	Non-Return Damper - Maintenance Train Exhaust Air	NS	E	NSC	No	1UJK, 4UJK	
30SAC51/52/53/54 AA002	Non-return Dampers - Battery/SCWS Room Exhaust	S	C	I	Yes	UJK	ASME AG-1[14]
30SAC31/32/33/35 AA003	Non-return Dampers - Exhaust Air System	S	C	I	Yes	UJK	ASME AG-1[14]
30SAC51/54 AA005	Non-Return Dampers - Maintenance Train Battery/SCWS Room Exhaust	NS	E	NSC	No	1UJK, 4UJK	
30SAC05/08 AA005	Non-return Dampers - Maintenance Train Supply Air	NS	E	NSC	No	1UJK, 4UJK	

Table 3.2.2-1—Classification Summary
Sheet 167 of 185

KKS System or Component Code	SSC Description	Safety Classification (Note 15)	Quality Group Classification	Seismic Category (Note 16)	10 CFR 50 Appendix B Program (Note 5)	Location (Note 17)	Comments/ Commercial Code
30SAC01/02/03/04 AA005	Non-return Dampers - Supply Air System	S	C	I	Yes	UJK	ASME AG-1[14]
SAC	Non-Safety Related Fire Dampers and Ducts	NS	E	NSC	No	UJK	NFPA 90A[18], NFPA 80[20]
30SAC05/08 AT004	Pre-Filters - Maintenance Train Supply Air	NS	E	NSC	No	1UJK, 4UJK	
30SAC01/02/03/04 AT004	Pre-Filters - Supply Air System	S	C	I	Yes	UJK	ASME AG-1[14]
30SAC61/62/63/64 AN001/002	Recirculation Fans - Recirculation Cooling Units	S	C	I	Yes	UJK	ASME AG-1[14]
30SAC05/08 AT005	Roughing Filters - Maintenance Train Supply Air	NS	E	NSC	No	1UJK, 4UJK	
30SAC01/02/03/04 AT005	Roughing Filters - Supply Air System	S	C	I	Yes	UJK	ASME AG-1[14]
SAC	Safety Related Fire Dampers and Ducts	S	C	I	Yes	UJK	NFPA 90A[18], NFPA 80[20]
30SAC01/02/03/04 BS001	Silencer on Fan Suctions - Supply Air System	S	C	I	Yes	UJK	ASME AG-1[14]

Table 3.2.2-1—Classification Summary
Sheet 168 of 185

KKS System or Component Code	SSC Description	Safety Classification (Note 15)	Quality Group Classification	Seismic Category (Note 16)	10 CFR 50 Appendix B Program (Note 5)	Location (Note 17)	Comments/ Commercial Code
30SAC05/08 BS002	Silencers on Fan Discharges - Maintenance Train Supply Air	NS	E	NSC	No	1UJK, 4UJK	
30SAC01/02/03/04 BS002	Silencers on Fan Discharges - Supply Air System	S	C	I	Yes	UJK	ASME AG-1[14]
30SAC05/08 BS001	Silencers on Fan Suctions - Maintenance Train Supply Air	NS	E	NSC	No	1UJK, 4UJK	
30SAC05/08 AN001	Supply Air Fans - Maintenance Train Supply Air	NS	E	NSC	No	1UJK, 4UJK	
30SAC01/02/03/04 AN001	Supply Air Fans - Supply Air System	S	C	I	Yes	UJK	ASME AG-1[14]
SAC	Supply Duct and Dampers not assigned to Electrical and I&C Rooms	S	C	I	Yes	UJK	ASME AG-1[14]
SAC	Supply Duct and Dampers to Electrical and I&C Rooms	S	C	I	Yes	UJK	ASME AG-1[14]

Table 3.2.2-1—Classification Summary
Sheet 169 of 185

KKS System or Component Code	SSC Description	Safety Classification (Note 15)	Quality Group Classification	Seismic Category (Note 16)	10 CFR 50 Appendix B Program (Note 5)	Location (Note 17)	Comments/ Commercial Code
SAC	Toilet Exhaust Components - Maintenance Train	NS	E	NSC	No	1UJK, 4UJK	
KLC	**Safeguard Building Controlled Area Ventilation System**						
30KLC41/42 AT003	Carbon Adsorbers	S	C	I	Yes	UFA	ASME AG-1[14]
30KLC45 AA005/ 006	Dampers, Containment Building Isolation	S	C	I	Yes	UJH	ASME AG-1[14]
30KLC45 AA003/ 004	Dampers, Fuel Building Isolation	S	C	I	Yes	UJH	ASME AG-1[14]
30KLC31/32/33/34 AA001/003	Dampers, Isolation Accident Exhaust	S	C	I	Yes	UJH	ASME AG-1[14]
30KLC11 AA008	Dampers, Isolation Div 1 JM room	S	C	I	Yes	UJH	ASME AG-1[14]
30KLC11/14 AA007	Dampers, Isolation Div 1/4 JN room	S	C	I	Yes	UJH	ASME AG-1[14]
30KLC21/24 AA005	Dampers, Isolation Div 1/4 JN room	S	C	I	Yes	UJH	ASME AG-1[14]
30KLC22 AA010	Dampers, Isolation Div 2 personnel air lock exhaust	S	C	I	Yes	UJH	ASME AG-1[14]
30KLC12 AA009/ 010	Dampers, Isolation Div 2 personnel air lock supply	S	C	I	Yes	UJH	ASME AG-1[14]

Table 3.2.2-1—Classification Summary
Sheet 170 of 185

KKS System or Component Code	SSC Description	Safety Classification (Note 15)	Quality Group Classification	Seismic Category (Note 16)	10 CFR 50 Appendix B Program (Note 5)	Location (Note 17)	Comments/ Commercial Code
30KLC21 AA002	Damper, CCWS/ EFWS Valve Room	S	C	I	Yes	UJH	ASME AG-1[14]
30KLC24 AA002-004	Dampers, Isolation Div 4 JMQ rooms	S	C	I	Yes	UJH	ASME AG-1[14]
30KLC21/22/23/24 AA007/008	Dampers, Isolation Operational Exhaust	S	C	I	Yes	UJH	ASME AG-1[14]
30KLC21/24 AA010	Dampers, Isolation Operational Exhaust	S	C	I	Yes	UJH	ASME AG-1[14]
30KLC11/12/13/14 AA004/005	Dampers, Isolation Operational Supply	S	C	I	Yes	UJH	ASME AG-1[14]
30KLC45 AA001/ 002	Dampers, Safeguard Building Isolation	S	C	I	Yes	UJH	ASME AG-1[14]
30KLC21/22/23/24 AA006	Dampers, Volume Control Operational Exhaust	S	C	I	Yes	UJH	ASME AG-1[14]
30KLC11/12/13/14 AA003	Dampers, Volume Control Operational Supply	S	C	I	Yes	UJH	ASME AG-1[14]
30KLC41/42 AN001	Exhaust Fans for KLC filtration Units	S	C	I	Yes	UFA	ASME AG-1[14]
KLC	Fire Dampers	S	C	I	Yes	UJH	NFPA 90A[18], NFPA 80[20]
30KLC41/42 AH001	Heaters	S	C	I	Yes	UFA	ASME AG-1[14]
30KLC41/42 AT002	HEPA Filters	S	C	I	Yes	UFA	ASME AG-1[14]

Table 3.2.2-1—Classification Summary
Sheet 171 of 185

KKS System or Component Code	SSC Description	Safety Classification (Note 15)	Quality Group Classification	Seismic Category (Note 16)	10 CFR 50 Appendix B Program (Note 5)	Location (Note 17)	Comments/ Commercial Code
30KLC41/42 AT004	HEPA Filters	S	C	I	Yes	UFA	ASME AG-1[14]
30KLC41/42 AA001	Inlet Tight Isolation Dampers with Electric actuator	S	C	I	Yes	UJH	ASME AG-1[14]
30KLC51/54 AT003	Moisture Separator	S	C	I	Yes	UJH	ASME AG-1[14]
30KLC51/52/53/54 AT001	Moisture Separators	S	C	I	Yes	UJH	ASME AG-1[14]
30KLC51/52/53/54 AT002	Moisture Separators	S	C	I	Yes	UJH	ASME AG-1[14]
30KLC41/42 AA003	Non-Return Dampers	S	C	I	Yes	UJH	ASME AG-1[14]
30KLC41/42 AT001	Pre-Filter/Moisture Separators	S	C	I	Yes	UFA	ASME AG-1[14]
30KLC51/52/53/54 AC001	Recirculation Cooling Units	S	C	I	Yes	UJH	ASME AG-1[14]
30KLC51/52/53/54 AC002	Recirculation Cooling Units	S	C	I	Yes	UJH	ASME AG-1[14]
30KLC51/54 AC003	Recirculation Cooling Units	S	C	I	Yes	UJH	ASME AG-1[14]
30KLC51/52/53/54 AN001	Recirculation Fans	S	C	I	Yes	UJH	ASME AG-1[14]
30KLC51/52/53/54 AN002	Recirculation Fans	S	C	I	Yes	UJH	ASME AG-1[14]
30KLC51/54 AN003	Recirculation Fans	S	C	I	Yes	UJH	ASME AG-1[14]

Table 3.2.2-1—Classification Summary
Sheet 172 of 185

KKS System or Component Code	SSC Description	Safety Classification (Note 15)	Quality Group Classification	Seismic Category (Note 16)	10 CFR 50 Appendix B Program (Note 5)	Location (Note 17)	Comments/ Commercial Code
30KLC12 AH001	Room Heater	NS	E	NSC	No	UJH	
30KLC11/14 AH001/002	Room Heaters	NS	E	NSC	No	UJH	
30KLC12/13 AH002-006	Room Heaters	NS	E	NSC	No	UJH	
SAD	**Emergency Power Generating Building Ventilation System**	S	C	I	Yes	UBP	ASME AG-1[14]
SAQ	**Essential Service Water Pump Building Ventilation System**	S	C	I	Yes	URB	ASME AG-1[14]
SAQ	Cooling Coil Isolation Valves	S	C	I	Yes	URB	ASME Class 3[3]
SAQ	Balance of SAQ System	S	C	I	Yes	URB	ASME AG-1[14]
KLA	**Containment Building Ventilation System**						
30KLA50 AT003	Carbon Adsorber (KLA 5)	NS-AQ	D	I	Yes	UJA	ASME AG-1[14], ASME N510
30KLA21/22 AT003	Carbon Adsorbers	S	B	I	Yes	UFA	ASME AG-1[14], ASME N510, RG 1.52

Table 3.2.2-1—Classification Summary
Sheet 173 of 185

KKS System or Component Code	SSC Description	Safety Classification (Note 15)	Quality Group Classification	Seismic Category (Note 16)	10 CFR 50 Appendix B Program (Note 5)	Location (Note 17)	Comments/ Commercial Code
30KLA40 AA001	Containment Isolation Valve - Full Flow Exhaust Inside	S	B	I	Yes	UJA	ASME Class 2[2]
30KLA40 AA002	Containment Isolation Valve - Full Flow Exhaust Outside	S	B	I	Yes	UFA	ASME Class 2[2]
30KLA30 AA003	Containment Isolation Valve - Full Flow Supply Inside	S	B	I	Yes	UJA	ASME Class 2[2]
30KLA30 AA002	Containment Isolation Valve - Full Flow Supply Outside	S	B	I	Yes	UFA	ASME Class 2[2]
30KLA20 AA001	Containment Isolation Valve - Low Flow Exhaust Inside	S	B	I	Yes	UJA	ASME Class 2[2]
30KLA20 AA003	Containment Isolation Valve - Low Flow Exhaust Outside	S	B	I	Yes	UFA	ASME Class 2[2]
30KLA10 AA003	Containment Isolation Valve - Low Flow Supply Inside	S	B	I	Yes	UJA	ASME Class 2[2]

Table 3.2.2-1—Classification Summary
Sheet 174 of 185

KKS System or Component Code	SSC Description	Safety Classification (Note 15)	Quality Group Classification	Seismic Category (Note 16)	10 CFR 50 Appendix B Program (Note 5)	Location (Note 17)	Comments/ Commercial Code
30KLA10 AA001	Containment Isolation Valve - Low Flow Supply Outside	S	B	I	Yes	UFA	ASME Class 2[2]
30KLA61/63 AC001/003	Cooling Coils (4 X 25%) KAB	NS	E	NSC	No	UJA	ASME AG-1[14]
30KLA61/63 AC002/004	Cooling Coils (4 X 25%) QNJ	NS	E	NSC	No	UJA	ASME AG-1[14]
30KLA20 AA004	Damper, Controls Negative Pressure	NS	E	NSC	No	UJA	ASME AG-1[14]
30KLA10 AA005	Damper, Supply Air	NS	E	NSC	No	UJA	ASME AG-1[14]
30KLA61/63 AA004	Dampers (Maintain DP between Service and Equipment Areas)	NS	E	NSC	No	UJA	ASME AG-1[14]
30KLA61/63 AA003/004	Dampers, Cooling Units	NS	E	NSC	No	UJA	ASME AG-1[14]
30KLA21/22 AA004/007	Dampers, Isolation	S	B	I	Yes	UFA	ASME AG-1[14], ASME N510, RG 1.52
30KLA50 AH001	Electric Heater, (KLA 5)	NS-AQ	D	I	Yes	UJA	ASME AG-1[14], ASME N510
30KLA21/22 AH005	Electric Heaters	S	B	I	Yes	UFA	ASME AG-1[14], ASME N510, RG 1.52

Table 3.2.2-1—Classification Summary
Sheet 175 of 185

KKS System or Component Code	SSC Description	Safety Classification (Note 15)	Quality Group Classification	Seismic Category (Note 16)	10 CFR 50 Appendix B Program (Note 5)	Location (Note 17)	Comments/ Commercial Code
30KLA51/52 AN001	Fans, Internal Filtration System	NS-AQ	D	I	Yes	UJA	ASME AG-1[14], ASME N510
30KLA21/22 AN001	Fans, Low Flow Purge Exhaust	S	B	I	Yes	UFA	ASME AG-1[14], ASME N510, RG 1.52
30KLA61/62/63/64 AN001	Fans, Main Supply (4 x 50%)	NS	E	NSC	No	UJA	ASME AG-1[14]
30KLA50 AT002	HEPA Filter (KLA 5)	NS-AQ	D	I	Yes	UJA	ASME AG-1[14], ASME N510
30KLA50 AT004	HEPA Filter (KLA 5)	NS-AQ	D	I	Yes	UJA	ASME AG-1[14], ASME N510
30KLA21/22 AT002	HEPA Filters	S	B	I	Yes	UFA	ASME AG-1[14], ASME N510, RG 1.52
30KLA21/22 AT042	HEPA Filters	S	B	I	Yes	UFA	ASME AG-1[14], ASME N510, RG 1.52
30KLA71 AC001-012	Local Air Cooling Units w/ QNJ Cooling Water	NS	E	NSC	No	UJA	ASME AG-1[14]
30KLA50 AT001	Pre-Filter (KLA 5)	NS-AQ	D	I	Yes	UJA	ASME AG-1[14], ASME N510

Table 3.2.2-1—Classification Summary
Sheet 176 of 185

KKS System or Component Code	SSC Description	Safety Classification (Note 15)	Quality Group Classification	Seismic Category (Note 16)	10 CFR 50 Appendix B Program (Note 5)	Location (Note 17)	Comments/ Commercial Code
30KLA21/22 AT001	Pre-Filters	S	B	I	Yes	UFA	ASME AG-1[14], ASME N510, RG 1.52
30KLA65/66 AN001	Reactor Pit Fans (4 x 50%)	NS-AQ	C	I	Yes	UJA	ASME AG-1[14], ASME Class 3[3]
30KLA65/66 AN002	Reactor Pit Fans (4 x 50%)	NS-AQ	C	I	Yes	UJA	ASME AG-1[14], ASME Class 3[3]
30KLA71 AN001-012	Supply Air Fans (Axial, Direct Drive)	NS	E	NSC	No	UJA	ASME AG-1[14]
KLB	**Annulus Ventilation System**						
30KLB21/24 AA006	Accident Train Backdraft Dampers	S	B	I	Yes	UFA	ASME AG-1[14]
30KLB21/24 AA004	Accident Train Motor Operated Exhaust Dampers	S	B	I	Yes	UFA	ASME AG-1[14]
30KLB21/24 AA003	Accident Train Motor Operated Supply Dampers	S	B	I	Yes	UFA	ASME AG-1[14]
30KLB21/24 AT003	Adsorbers	S	B	I	Yes	UFA	ASME AG-1[14]
30KLB21/24 AT004	Downstream HEPA Filters	S	B	I	Yes	UFA	ASME AG-1[14]
30KLB21/24 AH001	Electric Heaters	S	B	I	Yes	UFA	ASME AG-1[14]
30KLB21/24 AN001	Exhaust Fans	S	B	I	Yes	UFA	ASME AG-1[14]

Table 3.2.2-1—Classification Summary
Sheet 177 of 185

KKS System or Component Code	SSC Description	Safety Classification (Note 15)	Quality Group Classification	Seismic Category (Note 16)	10 CFR 50 Appendix B Program (Note 5)	Location (Note 17)	Comments/ Commercial Code
30KLB34 AA004	Normal Train Control Damper	NS	E	NSC	No	UFA	ASME AG-1[14]
KLB	Normal Train Fire Dampers	NS	E	NSC	No	UFA	NFPA 90A[18], NFPA 80[20]
30KLB44 AA002/003	Normal Train Motor Operated Exhaust Dampers	S	B	I	Yes	UFA	ASME AG-1[14]
30KLB34 AA002/003	Normal Train Motor Operated Supply Dampers	S	B	I	Yes	UFA	ASME AG-1[14]
30KLB21/24 AT001	Pre-Filters	S	B	I	Yes	UFA	ASME AG-1[14]
30KLB21/24 AT002	Upstream HEPA Filters	S	B	I	Yes	UFA	ASME AG-1[14]
KLL	**Fuel Building Ventilation System**						
KLL	Ductwork between KLL and KLC for Iodine Exhaust from the Fuel Handling Hall	S	C	I	Yes	UFA	ASME AG-1[14]
30KLL21/24 AA001-003	Exhaust Isolation Dampers	S	C	I	Yes	UFA	ASME AG-1[14]
30KLL21/24 AA004	Fuel Building Exhaust/KLC Isolation Dampers	S	C	I	Yes	UFA	ASME AG-1[14]

Table 3.2.2-1—Classification Summary
Sheet 178 of 185

KKS System or Component Code	SSC Description	Safety Classification (Note 15)	Quality Group Classification	Seismic Category (Note 16)	10 CFR 50 Appendix B Program (Note 5)	Location (Note 17)	Comments/ Commercial Code
30KLL41/44 AA100/101	Fuel Building Exhaust Air Isolation Dampers	S	C	I	Yes	UFA	ASME AG-1[14]
30KLL31 AA049	Fuel Building Supply Air Isolation Damper	S	C	I	Yes	UFA	ASME AG-1[14]
30KLL31/34 AA090	Fuel Building Supply Air Isolation Damper	S	C	I	Yes	UFA	ASME AG-1[14]
30KLL34 AA065	Fuel Building Supply Air Isolation Damper	S	C	I	Yes	UFA	ASME AG-1[14]
30KLL61AH010/011 30KLL64AH012-014	Non-Safety Related Electric Heating Units in supply air duct	NS-AQ	D	II	Yes	UFA	ASME AG-1[14]
30KLL61/64 AC/AT/AN002/003	Recirculation Cooling Units in FAK Pump Rooms	S	C	I	Yes	UFA	ASME AG-1[14]
30KLL61/64 AC/AT/AN001	Recirculation Cooling Units in JDH Pump Rooms	S	C	I	Yes	UFA	ASME AG-1[14]
30KLL61/64AH001-004	Safety Related Electric Heating Units in JDH Pump Rooms and Pipe Chase	S	C	I	Yes	UFA	ASME AG-1[14]

Table 3.2.2-1—Classification Summary
Sheet 179 of 185

KKS System or Component Code	SSC Description	Safety Classification (Note 15)	Quality Group Classification	Seismic Category (Note 16)	10 CFR 50 Appendix B Program (Note 5)	Location (Note 17)	Comments/ Commercial Code
30KLL11/14 AA001-003	Supply Isolation Dampers	S	C	I	Yes	UFA	ASME AG-1[14]
30KLL11 AA010	Supply Pressure Control Damper	NS-AQ	D	II	Yes	UFA	ASME AG-1[14]
KLL	Balance of KLL System	NS-AQ	D	II	Yes	UFA	ASME AG-1[14]
KLL	Exhaust Air Duct	S	C	I	Yes	UFA	ASME AG-1[14]
KLL	Fire Dampers on exhaust air duct	S	C	I	Yes	UFA	NFPA 90A[18], NFPA 80[20]
KLL	All other Fire Dampers	NS-AQ	D	II	Yes	UFA	NFPA 90A[18], NFPA 80[20]
30KLL64AH020/021 30KLL61AH022-028	Non-safety-related Space Electric Heating Units	NS	E	NSC	No	UFA	Commercial
30KLL31AA009 30KLL34AA011	Supply Air Manual Isolation Dampers	NS-AQ	D	II	Yes	UFA	ASME AG-1[14]
30KLL41AA004 30KLL44AA022	Exhaust Air Manual Isolation Dampers	S	C	I	Yes	UFA	ASME AG-1[14]
SAM3	**Main Steam & Feedwater Valve Room Ventilation System**						
SAM3	Recirculation Cooling Units	NS	E	NSC	No	UJE	
SAM3	Electric Heaters	NS	E	NSC	No	UJE	

Table 3.2.2-1—Classification Summary
Sheet 180 of 185

KKS System or Component Code	SSC Description	Safety Classification (Note 15)	Quality Group Classification	Seismic Category (Note 16)	10 CFR 50 Appendix B Program (Note 5)	Location (Note 17)	Comments/ Commercial Code
KLD	**Access Building Ventilation System**						
KLD	Building Protection Grilles	NS	E	NSC	No	UKE	
KLD	Control Area Exhaust Dampers	NS-AQ	D	NSC	No	UKE, UKA	ASME AG-1[14]
30KLD41/42/43 AT002	Controlled Area HEPA Filters	NS-AQ	D	NSC	No	UKE	ASME AG-1[14]
30KLD41/42/43 AT001	Controlled Area Pre-Filters	NS-AQ	D	NSC	No	UKE	ASME AG-1[14]
30KLD01/02 AT005	Droplet Separators	NS	E	NSC	No	UKE	
KLD	Duct Electric Air Heaters	NS	E	NSC	No	UKE	
30KLD45/46 AN001	Exhaust Fans - Controlled Area	NS-AQ	D	NSC	No	UKA	ASME AG-1[14]
30KLD32/33 AN001	Exhaust Fans - Supervised Area	NS	E	NSC	No	UKE	
30KLD04/05/32/33 AH501	Fan Motor Anti-Condensate Heaters	NS	E	NSC	No	UKE	
30KLD45/46 AH501	Fan Motor Anti-Condensate Heaters	NS-AQ	D	NSC	No	UKA	ASME AG-1[14]
KLD	Fire Dampers	NS-AQ	D	NSC	No	UKE	NFPA 90A[18], NFPA 80[20]
KLD	Intake/Exhaust Screens	NS	E	NSC	No	UKE, UJA	

Table 3.2.2-1—Classification Summary
Sheet 181 of 185

KKS System or Component Code	SSC Description	Safety Classification (Note 15)	Quality Group Classification	Seismic Category (Note 16)	10 CFR 50 Appendix B Program (Note 5)	Location (Note 17)	Comments/ Commercial Code
30KLD39 AN001	Prestressing Gallery Exhaust Fan	NS	E	NSC	No	UJA	
30KLD01/02 AT006	Roughing Filters	NS	E	NSC	No	UKE	
KLD	Silencers	NS	E	NSC	No	UKE	
30KLD09 AC001	Steam Humidifier	NS	E	NSC	No	UKE	
30KLD01/02 AC002	Supply Air Coolers	NS	E	NSC	No	UKE	
30KLD04/05 AN001	Supply Air Fans	NS	E	NSC	No	UKE	
30KLD01/02 AC003	Supply Air Heaters	NS	E	NSC	No	UKE	
30KLD01/02 AT004	Supply Air Pre-Filters	NS	E	NSC	No	UKE	
30KLD01/02 AC001	Supply Air Pre-Heaters	NS	E	NSC	No	UKE	
KLD	Supply/Supervised Area Exhaust Dampers	NS	E	NCS	No	UKE	
KLE	**Nuclear Auxiliary Building Ventilation System**	NS	E	NSC	No	UKA	ASME AG-1[14]
SAG	**Smoke Confinement System**	NS	E	NSC	No	UJK, UJH	NFPA 92A[19]

Table 3.2.2-1—Classification Summary
Sheet 182 of 185

KKS System or Component Code	SSC Description	Safety Classification (Note 15)	Quality Group Classification	Seismic Category (Note 16)	10 CFR 50 Appendix B Program (Note 5)	Location (Note 17)	Comments/ Commercial Code
[[SAM1, SAM2, SAC70	**Turbine Island Ventilation System**	NS	E	NSC	No	UMA, UBA	Local Building Codes]]
SAL	**Station Blackout Room Ventilation System**	NS	E	NSC	No	UBA	Local Building Codes
KLF	**Radioactive Waste Building Ventilation**						
30KLF50/51 AC001	Air Coolers	NS	E	NSC	No	UKS	
30KLF02/03 AC002	Air Coolers	NS	E	NSC	No	UKS	
30KLF08 AC001-004	Air Heaters	NS	E	NSC	No	UKS	
30KLF25/26/39/40 AA002	Backdraft Dampers	NS	D	NSC	No	UKS	ASME AG-1[14]
30KLF02/03 AA003	Backdraft Dampers	NS	E	NSC	No	UKS	
30KLF37/38 AN001	Booster Fans	NS	D	NSC	No	UKS	ASME AG-1[14]
30KLF22/23 AT003	Carbon Adsorbers	NS	D	NSC	No	UKS	ASME AG-1[14]
30KLF36 AT001	Carbon Adsorbers	NS	D	NSC	No	UKS	ASME AG-1[14]
30KLF05/50/51 AT001	Demisters	NS	E	NSC	No	UKS	
30KLF02/03 AT003	Demisters	NS	E	NSC	No	UKS	
30KLF38 AA003	Electric Powered Flow Control Damper	NS	D	NSC	No	UKS	ASME AG-1[14]

Table 3.2.2-1—Classification Summary
Sheet 183 of 185

KKS System or Component Code	SSC Description	Safety Classification (Note 15)	Quality Group Classification	Seismic Category (Note 16)	10 CFR 50 Appendix B Program (Note 5)	Location (Note 17)	Comments/ Commercial Code
30KLF31/32/34/35 AA003	Electric Powered Flow Control Dampers	NS	E	NSC	No	UKS	
30KLF37/38 AA001	Electric Powered Flow Control Dampers	NS	D	NSC	No	UKS	ASME AG-1[14]
30KLF80 AH001/002	Electric Staircase Heaters	NS	E	NSC	No	UKS	
30KLF25/26/39/40 AN001	Exhaust Fans	NS	D	NSC	No	UKS	ASME AG-1[14]
30KLF22/23 AA001/ 002	Filter Unit Bubble Tight Dampers for Isolation	NS	D	NSC	No	UKS	ASME AG-1[14]
30KLF31/32/33/34/ 35 AA001	Filter Unit Bubble Tight Dampers for Isolation	NS	E	NSC	No	UKS	
30KLF31/32/33/34/ 35 AA002	Filter Unit Bubble Tight Dampers for Isolation	NS	E	NSC	No	UKS	
30KLF33 AA003/004	Filter Unit Bubble Tight Dampers for Isolation	NS	E	NSC	No	UKS	
30KLF02/03	Filters	NS	E	NSC	No	UKS	ASME AG-1[14]
KLF	Fire Dampers	NS-AQ	D	NSC	No	UKS	NFPA 90A[18], NFPA 80[20]

Table 3.2.2-1—Classification Summary
Sheet 184 of 185

KKS System or Component Code	SSC Description	Safety Classification (Note 15)	Quality Group Classification	Seismic Category (Note 16)	10 CFR 50 Appendix B Program (Note 5)	Location (Note 17)	Comments/ Commercial Code
30KLF22/23/36 AH001	Heaters for Filter Units	NS	D	NSC	No	UKS	ASME AG-1[14]
30KLF31/32/33/34/ 35 AT002	HEPA Filters	NS	E	NSC	No	UKS	ASME AG-1[14]
30KLF22/23/36 AT002	HEPA Filters	NS	D	NSC	No	UKS	ASME AG-1[14]
30KLF22/23 AT004	HEPA Filters	NS	D	NSC	No	UKS	ASME AG-1[14]
30KLF25/26/37/38/ 39/40 AA001	Manual Dampers	NS	D	NSC	No	UKS	ASME AG-1[14]
30KLF37/38 AA002	Manual Dampers	NS	D	NSC	No	UKS	ASME AG-1[14]
30KLF02/03 AA002	Manual Dampers	NS	E	NSC	No	UKS	
30KLF31/32/33/34/ 35 AT001	Pre-Filters	NS	E	NSC	No	UKS	ASME AG-1[14]
30KLF22/23 AT001	Pre-Filters	NS	D	NSC	No	UKS	ASME AG-1[14]
30KLF02/03	Pre-Filters	NS	E	NSC	No	UKS	ASME AG-1[14]
30KLF07 AC001	Pre-Heaters	NS	E	NSC	No	UKS	
30KLF02/03 AC001/ 003	Pre-Heaters	NS	E	NSC	No	UKS	
30KLF08 AN002-004	Recirculating Air Fan	NS	E	NSC	No	UKS	
30KLF08/50/51 AN001	Recirculating Air Fans	NS	E	NSC	No	UKS	
30KLF08 AC001-004	Recirculating Cooler	NS	E	NSC	No	UKS	

Table 3.2.2-1—Classification Summary
Sheet 185 of 185

KKS System or Component Code	SSC Description	Safety Classification (Note 15)	Quality Group Classification	Seismic Category (Note 16)	10 CFR 50 Appendix B Program (Note 5)	Location (Note 17)	Comments/ Commercial Code
30KLF10 AH002	Room Heaters	NS	E	NSC	No	UKS	
30KLF06/09/10 AH001	Room Heaters	NS	E	NSC	No	UKS	
30KLF05 AC001	Steam Humidifier	NS	E	NSC	No	UKS	
30KLF04/26/31/35 AA101	Supply Air Control Dampers	NS	E	NSC	No	UKS	
30KLF02/03 AN001	Supply Fans	NS	E	NSC	No	UKS	

Notes:

1. ASME Class 1 refers to "ASME Boiler and Pressure Vessel Code, Section III, Division 1, Subsection NB - Class 1 Components - 2004 Edition, No Addenda, with 10 CFR 50.55a Exceptions and Clarifications."

2. ASME Class 2 refers to "ASME Boiler and Pressure Vessel Code, Section III, Division 1, Subsection NC - Class 2 Components - 2004 Edition, No Addenda, with 10 CFR 50.55a Exceptions and Clarifications."

3. ASME Class 3 refers to "ASME Boiler and Pressure Vessel Code, Section III, Division 1, Subsection ND - Class 3 Components - 2004 Edition, No Addenda, with 10 CFR 50.55a Exceptions and Clarifications."

4. ASME Class CS refers to "ASME Boiler and Pressure Vessel Code, Section III, Division 1, Subsection NG - Core Support Structures - 2004 Edition, No Addenda, with 10 CFR 50.55a Exceptions and Clarifications."

5. Those SSCs classified as NS-AQ (for Safety Class) and classified as "Yes" for 10 CFR 50 Appendix B will be subject only to those quality assurance requirements of Appendix B that are pertinent to that SSC based on the potential affect of the SSC on safety-related functions.

6. ANSI/ASME B31.1 refers to "ANSI/ASME B31.1 - 2004: Power Piping."

7. ANSI/ASME B16.34 refers to "ANSI/ASME B16.34 - 2004: Valves Flanged, Threaded and Welding End."

8. ASME VIII refers to "ASME Boiler & Pressure Vessel Code, Section VIII, Rules for Construction of Pressure Vessels, Division 1 - 2004 Edition, No Addenda.

9. ANSI/ASME B31.3 refers to "ANSI/ASME B31.3 - 2004: Process Piping."

10. API 620 refers to "American Petroleum Institute - API 620: Design and Construction of Large, Welded, Low-Pressure Storage Tanks, Tenth Edition (2002 with Addendum 1, June 2004)."

11. API 650 refers to "Welded Steel Tanks for Oil Storage, "American Petroleum Institute (1998 with Addenda 1-4)."

12. Not Used.

13. ANSI/AISC N690-1994(R2004)s2 refers to "American Institute of Steel Construction - Specification for the Design, Fabrication, and Erection of Steel Safely-Related Structures for Nuclear Facilities ANSI/AISC N690-1994 (R2004), Supplement 2."

14. ASME AG-1 refers to "ASME AG-1a-2004 - Code on Nuclear Air and Gas Treatment."

15. As defined in Section 3.2.1, the U.S. EPR safety classifications are:

    – S - Safety-related

    – NS - Non-safety-related

    – NS-AQ - Supplemented Grade

16. As defined in Section 3.2.1, the Seismic Classifications are:

    – I - Seismic Category I

    – II - Seismic Category II

    – RS - Radwaste Seismic

    – CS - Conventional Seismic

– NSC - Non-seismic

17. Locations are defined below:

	KKS Designator	Location
	UAA	Switchyard
	UBA	Switchgear building
1	UBE	Auxiliary power transformer areas
2	UBE	Auxiliary power transformer areas
1	UBF	Generator transformer areas
2	UBF	Generator transformer areas
3	UBF	Generator transformer areas
	UBH	Structure for oil collecting pits
1	UBP	Emergency power generating, building 1
2	UBP	Emergency power generating, building 2
3	UBP	Emergency power generating, building 3
4	UBP	Emergency power generating, building 4
1	UBZ	Buried cable conduit ductbank from 30UBA (division 1) to 31UJH and 31UJK
2	UBZ	Buried cable conduit ductbank from 30UBA (division 2) to 32UJH and 32UJK
3	UBZ	Buried cable conduit ductbank from 30UBA (division 3) to 33UJH and 33UJK
4	UBZ	Buried cable conduit ductbank from 30UBA (division 4) to 34UJH and 34UJK and 30UKS
5	UBZ	Buried cable conduit ductbank from switchgear building to transformers
6	UBZ	Buried cable conduit ductbank from turbine building to circulating water structures
	UFA	Fuel building
1	UGC	Demineralized water storage area
2	UGC	Demineralized water storage area
	UGU	Structure for effluent disposal
	UJA	Reactor building
	UJB	Reactor building annulus
1	UJE	Main steam valve room, division 1

Next File

2	UJE	Main steam valve room, division 2
3	UJE	Main steam valve room, division 3
4	UJE	Main steam valve room, division 4
1	UJH	Safeguard building mechanical, division 1
2	UJH	Safeguard building mechanical, division 2
3	UJH	Safeguard building mechanical, division 3
4	UJH	Safeguard building mechanical, division 4
1	UJK	Safeguard building electrical, division 1
2	UJK	Safeguard building electrical, division 2
3	UJK	Safeguard building electrical, division 3
4	UJK	Safeguard building electrical, division 4
	UJP	Reactor pit
	UK	Structures for reactor auxiliary systems
	UKA	Nuclear auxiliary building
	UKE	Access building
	UKH	Vent stack
	UKS	Radioactive waste processing building
	UM	Structures for main machine sets
	UMA	Turbine building
	UMY	Pipe bridge or support structure
1	UMZ	Buried piping and pipe ducts from 30UMA to 30UKA and 30UKS
2	UMZ	Buried piping and pipe ducts from 31UMZ to building 30UKE
	UPC	Circulating water intake structure
	UPE	Circulating water makeup intake structure
	UPF	Ultimate heat sink makeup water makeup intake structure
	UPQ	Water treatment building
	UQA	Circulating water pump building
1	UQB	Essential service water pump, building 1
2	UQB	Essential service water pump, building 2

3	UQB	Essential service water pump, building 3
4	UQB	Essential service water pump, building 4
	UQM	Service water and circulating water collecting pond
1	UQZ	Buried piping and pipe ducts for service water system and cables from 31UJH
2	UQZ	Buried piping and pipe ducts for service water system and cables from 32UJH
3	UQZ	Buried piping and pipe ducts for service water system and cables from 33UJH
4	UQZ	Buried piping and pipe ducts for service water system and cables from 34UJH
5	UQZ	Buried piping and pipe ducts for service water system
6	UQZ	Buried piping and pipe ducts for service water system
7	UQZ	Buried piping and pipe ducts for service water system
8	UQZ	Buried piping and pipe ducts for service water system
9	UQZ	Buried piping and pipe ducts for essential water pipes
	URA	Cooling tower structure
1	URB	Essential service water cooling tower structure, division 1
2	URB	Essential service water cooling tower structure, division 2
3	URB	Essential service water cooling tower structure, division 3
4	URB	Essential service water cooling tower structure, division 4
	USG	Fire protection storage tanks and building
	UST	Workshop & warehouse building
	UTG	Central gas supply building
	UYA	Office and staff amenities building
	UYF	Security access facility
	UYH	Simulator building (training facilities)
	UZE	Track system (rails if necessary)
	UZJ	Fencing and gates
	UZT	Outdoor area

18. NFPA 90A refers to “Standard for Installation of Air Conditioning and Ventilation Systems,” 2002 Edition.

19. NFPA 92A refers to “Standard for Smoke-Control Systems Utilizing Barriers and Pressure Differences,” 2006 Edition.

20. NFPA 80 refers to "Standard for Fire Doors and Other Opening Protectives," 2007 Edition.

21. HEI refers to "Standards for Power Plant Heat Exchangers," Fourth Edition, 2004.

22. ESW piping in trains PEB10/20/30/40 located in UZT are situated underground.

23. ASME Class MC refers to "ASME Boiler and Pressure Vessel Code, Section III, Division 2, Rules for Concrete Containments - 2004 Edition, No Addenda, with 10 CFR 50.55a Exceptions and Clarifications."

bounded by the U.S. EPR design basis flood values or otherwise demonstrate that the design is acceptable.

3.4.3.3 Reactor Building Flooding Analysis

Containment

The lowest elevation safe shutdown systems and components relevant to internal flooding inside containment include the safety injection system/residual heat removal system (SIS/RHRS), containment isolation valves, and reactor protection system. Equipment and components of these systems that are sensitive to flooding are generally located above the maximum internal flood level. This arrangement provides a margin between the normal operation maximum water level of the IRWST and these components, in order to store water released from postulated pipe failures and avoid a consequential failure by flooding.

In the event of piping failures, water flows directly to the IRWST while steam condenses on structures (e.g., concrete walls, containment walls, ceilings, and floors) and flows to the IRWST.

The analysis is focused on postulated piping failures that result in the largest volume of released water inside containment. Table 3.4-1 is a compilation of water-carrying piping systems located in the RB containment and RB annulus which were considered as potential internal flooding sources in the flooding analysis of these buildings. The following cases are enveloping scenarios for released water volume in containment:

- Water from a large break loss-of-coolant-accident (LOCA) in the reactor coolant pressure boundary (i.e., release of reactor coolant system inventory, pressurizer water volume, and the inventory of accumulators).
- Operation of the fire protection system.

A large break LOCA is determined to be the bounding case for the maximum released water volume in containment. There are no submerged SSC required to achieve safe shutdown or mitigate the consequences of an accident. No other postulated pipe breaks, through-wall cracks, or operation of the fire protection system inside containment release a volume of water which could cause flooding of safety-related SSC required for safe shutdown or to mitigate the consequence of accidents.

Inside containment, leakages are integrally detected by measuring humidity, temperature, condensate flow, and water levels in drain and vent collection tanks or sumps. Depending on the leak and break size and the affected system, the protection system initiates automatic measures as required to cope with the event (e.g., LOCA, main steam line break, or main feedwater line break). A NIDVS sump located at level -7 feet, 6-1/2 inches is equipped with safety-related Seismic Category I level instrumentation to initiate alarms in the MCR for a filled sump and large flooding

event. These alarms notify the MCR operator to begin action to isolate the flooding sources.

To avoid water ingress into the corium spreading area, which could produce a steam explosion in case of an accident, the venting area from the spreading compartment has a watertight door.

Reactor Building Annulus

Below elevation +0 feet, the annulus between the Shield Building and the Containment Building is a single volume; therefore, it is considered one room for flooding protection purposes. Water released from a specific location flows down in the annulus and collects on the bottom level. Because high-energy piping (e.g., main steam lines and main feedwater lines) is routed inside guard pipes, there is no water accumulation in the annulus due to their failure. Therefore, the analysis is focused on water-carrying systems without guard pipes. Table 3.4-1 lists the water-carrying piping systems in the annulus evaluated in the flooding analysis. The internal flooding sources inside the reactor building annulus are the moderate-energy water-carrying piping systems. Since these piping systems are seismically designed inside the annulus, through-wall leakage cracks were postulated. The released water from these pipe failures is limited by either operator action to isolate the source or by the limited volume of water contained in a closed system. The systems listed in Table 3.4-1 do not release an amount of water which would flood safety-related SSC and the resulting flood level is below elevation +0 feet. The bounding internal flooding source becomes operation of the fire protection system which occurs during manual fire fighting by hose stream. The released water during fire fighting does not flood safety-related SSC and the resulting flood level is below +0 feet.

Inside the annulus, only the plug boxes of cable penetrations for electrical and instrumentation and control equipment located above elevation +16 feet, 10-3/4 inches could be affected by flooding. In the event of operation of the fire water distribution system, the annulus ventilation system supply is lost because the annulus ventilation duct is flooded through the grids. Furthermore, the normal operating mode of the SB controlled area ventilation system could be lost because of water entering through the inspection openings. These consequences are acceptable because the safety-related functions are fulfilled by the annulus ventilation system exhaust trains which maintain sub-pressure in the annulus, the accident mode of the SB controlled area ventilation system which maintains sub-pressure in the SBs, and the recirculation mode of the SB controlled area ventilation system which maintains ambient conditions in the SBs.

Leak detection inside the annulus consists of safety-related Seismic Category I level measurements in the NIDVS sump located on elevation -14 feet, 1-1/4 inches. These level measurements initiate an alarm in the MCR for a filled sump (considered as the

first alarm for initiating the operator action time for isolation) and an alarm for a flooding event above floor level -14 feet, 1-1/4 inches.

The hydrostatic water loads corresponding to an elevation of +0 feet are taken into account in the structural design of the annulus walls and for the watertight design of cable and piping penetrations below this elevation.

The annulus is not divisionally separated; however, redundant divisions are separated in fire zones. In case of fire fighting or a postulated piping failure, overlapping areas exist where redundancies belonging to another division could be indirectly impacted by water flow through the horizontally arranged fire separation structures on the inner and outer walls of the annulus. In these cases, the plug boxes of cable penetrations for electrical and instrumentation and control equipment are designed to withstand this water flow.

3.4.3.4 Safeguard Buildings Flooding Analysis

The arrangement of the SBs provides physical separation of the redundant safe shutdown systems and components using structural barriers. The building layout directs released water within one SB to building levels below elevation +0 feet.

Below Elevation +0 Feet, 0 Inches

Division walls below elevation +0 feet, 0 inches provide separation and serve as flood barriers to prevent the spread of flood water to the adjacent SB. Below elevation +0 feet, SB-1 and SB-4 are connected to the Fuel Building (FB) via passageways. Postulated piping failures below elevation +0 feet could lead to consequential failures in only one division. Common flooding of SB-1 and the left hand side of the FB (i.e., FB-1, see Section 3.4.3.5 and the general arrangement drawings in Section 1.2), or of SB-4 and the right hand side of the FB (i.e., FB-2, see Section 3.4.3.5 and the general arrangement drawings in Section 1.2), is acceptable, because they belong to the same division.

Relevant component and system piping failures considered in the analysis of these building levels include loss of one demineralized water pool, a leak in the SIS suction line from the IRWST, a pipe leak in the SIS/RHRS during normal operation, and a break in the fire water distribution system piping. The bounding flooding source below elevation +0 feet is considered to be a postulated break in the main piping of the fire water distribution system. The volume of released water is based on an assumed full break in the piping, a flow rate limited by the maximum pump capacity, and an operator action time of thirty minutes to isolate the system after receiving the first alarm in the MCR. At these levels, the rooms within one division have sufficient interconnections so that the maximum released water volume can be stored within the division. Based on the available free volume of these building levels in each division, the maximum released water volume can be contained within the affected division.

Steel decking and plates and supporting steel beams may be used to form concrete floors. In these instances, the decking thickness is in addition to the nominal floor thicknesses. The decking, plates, and beams may be left in place, in which case they are designed for applicable seismic loads and other loading conditions. Other types of formwork may also be used that are left in place and become a permanent part of the structure. Such items meet code requirements and are designed to prevent their failure from affecting Seismic Category I SSC.

3.8.4.7 Testing and Inservice Inspection Requirements

Monitoring and maintenance of other Seismic Category I structures is performed in accordance with the requirements of 10 CFR 50.65 and supplemented with the guidance in RG 1.160 (GDC 1).

Testing and inservice inspection of the spent fuel pool leak chase channels in the FB is addressed in Section 9.1.

Refer to Section 9.1.5 for testing and inservice inspection requirements applicable to cranes.

Physical access is provided to perform inservice inspections of exposed portions of other Seismic Category I structures.

Examination of inaccessible portions of below-grade concrete structures for degradation and monitoring of ground water chemistry are addressed in Section 3.8.5.7.

A COL applicant that references the U.S. EPR design certification will address examination of buried safety-related piping in accordance with ASME Section XI, IWA-5244, "Buried Components."

3.8.5 Foundations

3.8.5.1 Description of the Foundations

Foundations for Seismic Category I structures are provided for the following buildings and structures:

- NI Common Basemat Structure foundation basemat.
- EPGB foundation basemats.
- ESWB foundation basemats. The ESWBs house the ESWCTs and the ESWPBs.

Foundations for buried items are included in Section 3.8.4. Section 3.7.2 addresses design requirements for Non-Seismic Category I structures to preclude adverse interaction effects on Seismic Category I structures.

Figure 3.8-101—Essential Service Water Building Section A-A

Table 3.9.6-2—Inservice Valve Testing Program Requirements (Sheet 1 of 103)

Valve Identification Number[1]	Description/ Valve Function	Valve Type[2]	Valve Actuator[3]	ASME Code Class[4]	ASME OM Code Category[5]	Active / Passive[6]	Safety Position[7]	Test Required[8,10]	Test Frequency[9]	Comments
30FAK10AA001	FPC to SFP Isolation	GT	MO	3	B	A	O/C	ET ST PI	Q Q 2Y	
30FAK10AA004	FPC to SFP Isolation Bypass	GB	MA	3	B	A	O/C	ET PI	Q 2Y	
30FAK11AA001	FPC Pump, 30FAK11AP001, Suction Isolation	GT	MA	3	B	P	O	PI	2Y	
30FAK12AA001	FPC Pump, 30FAK12AP001, Suction Isolation	GT	MA	3	B	P	O	PI	2Y	
30FAK11AA002	FPC Pump, 30FAK11AP001 Discharge Check	CK	SA	3	C	A	O	ET	Q	
30FAK11AA003	FPC Pump, 30FAK11AP001 Discharge Isolation	GT	MA	3	B	P	O	PI	2Y	
30FAK12AA002	FPC Pump, 30FAK12AP001 Discharge Check	CK	SA	3	C	A	O	ET	Q	
30FAK12AA003	FPC Pump, 30FAK12AP001 Discharge Isolation	GT	MA	3	B	P	O	PI	2Y	

Table 3.9.6-2—Inservice Valve Testing Program Requirements (Sheet 2 of 103)

Valve Identification Number[1]	Description/ Valve Function	Valve Type[2]	Valve Actuator[3]	ASME Code Class[4]	ASME OM Code Category[5]	Active / Passive[6]	Safety Position[7]	Test Required[8,10]	Test Frequency[9]	Comments
30FAK10AA002	FPC Hx, 30FAK10AC001 Outlet Isolation	GT	MA	3	B	P	O	PI	2Y	
30FAK20AA001	FPC to SFP Isolation	GT	MO	3	B	A	O/C	ET ST PI	Q Q 2Y	
30FAK20AA004	FPC to SFP Isolation Bypass	GB	MA	3	B	A	O/C	ET PI	Q 2Y	
30FAK21AA001	FPC Pump, 30FAK21AP001, Suction Isolation	GT	MA	3	B	P	O	PI	2Y	
30FAK22AA001	FPC Pump, 30FAK22AP001, Suction Isolation	GT	MA	3	B	P	O	PI	2Y	
30FAK21AA002	FPC Pump, 30FAK21AP001 Discharge Check	CK	SA	3	C	A	O	ET	Q	
30FAK21AA003	FPC Pump, 30FAK21AP001 Discharge Isolation	GT	MA	3	B	P	O	PI	2Y	
30FAK22AA002	FPC Pump, 30FAK22AP001 Discharge Check	CK	SA	3	C	A	O	ET	Q	
30FAK20AA002	FPC Hx, 30FAK20AC001 Outlet Isolation	GT	MA	3	B	P	O	PI	2Y	

Table 3.9.6-2—Inservice Valve Testing Program Requirements (Sheet 3 of 103)

Valve Identification Number[1]	Description/ Valve Function	Valve Type[2]	Valve Actuator[3]	ASME Code Class[4]	ASME OM Code Category[5]	Active / Passive[6]	Safety Position[7]	Test Required[8,10]	Test Frequency[9]	Comments
30FAK22AA003	FPC Pump, 30FAK22AP001 Discharge Isolation	GT	MA	3	B	P	O	PI	2Y	
30FAL12AA001	Reactor Pool Purification and Transfer Inner CIV	GT	MO	2	A	A	C	ET ST LT PI	CS CS 2Y 2Y	LT per 10 CFR 50, Appendix J
30FAL12AA002	Reactor Pool Purification and Transfer Outer CIV	GT	MO	2	A	A	C	ET ST LT PI	CS CS 2Y 2Y	LT per 10 CFR 50, Appendix J
30FAL15AA003	Reactor Pool Purification and Transfer Inner CIV	CK	SA	2	A/C	A	C	ET LT PI	CS 2Y 2Y	LT per 10 CFR 50, Appendix J
30FAL15AA002	Reactor Pool Purification and Transfer Outer CIV	GT	MO	2	A	A	C	ET ST LT PI	CS CS 2Y 2Y	LT per 10 CFR 50, Appendix J
30FAL10AA001	RB Pool Reactor Cavity Isolation	PL	MA	3	A	P	C	ET LT PI	5Y 2Y 2Y	Used to isolate non-safety downstream piping

Table 3.9.6-2—Inservice Valve Testing Program Requirements (Sheet 4 of 103)

Valve Identification Number[1]	Description/ Valve Function	Valve Type[2]	Valve Actuator[3]	ASME Code Class[4]	ASME OM Code Category[5]	Active / Passive[6]	Safety Position[7]	Test Required[8,10]	Test Frequency[9]	Comments
30FAL10AA002	RB Pool Internals Compartment Isolation	PL	MA	3	P	P	C	ET LT PI	5Y 2Y 2Y	Used to isolate non-safety downstream piping
30FAL10AA003	RB Pool ILCO Isolation	PL	MO	3	P	P	C	LT PI	2Y 2Y	Used to isolate non-safety downstream piping
30FAL10AA004	RB Pool Transfer Compartment Isolation	PL	MA	3	A	P	C	ET LT PI	5Y 2Y 2Y	Used to isolate non-safety downstream piping
30FAL10AA005	RB Pool Isolation	PL	MA	3	B	P	C	ET PI	5Y 2Y	Used to isolate non-safety downstream piping
30FAL11AA002	RB Pool Isolation Check	CK	SA	3	A	A	C	ET LT PI	Q 2Y 2Y	Used to isolate non-safety downstream piping

Table 3.9.6-2—Inservice Valve Testing Program Requirements (Sheet 5 of 103)

Valve Identification Number[1]	Description/ Valve Function	Valve Type[2]	Valve Actuator[3]	ASME Code Class[4]	ASME OM Code Category[5]	Active / Passive[6]	Safety Position[7]	Test Required[8,10]	Test Frequency[9]	Comments
30FAL16AA003	RB Pool Isolation	DI	MA	3	A	P	C	ET LT PI	5Y 2Y 2Y	Used to isolate non-safety downstream piping
30FAL20AA002	FB Pool Transfer Compartment Isolation	DI	MA	3	A	A	C	ET LT PI	5Y 2Y 2Y	Used to isolate non-safety downstream piping
30FAL20AA003	FB Pool CLP Isolation	DI	MA	3	A	A	C	ET LT PI	5Y 2Y 2Y	Used to isolate non-safety downstream piping
30FAL20AA004	RB Pool Isolation	DI	MA	3	A	A	C	ET LT PI	5Y 2Y 2Y	Used to isolate non-safety downstream piping
30FCJ05AA001	Fuel Transfer Tube Valve	GT	MA	3	A	P	C	ET LT PI	CS 2Y 2Y	
30GHC74AA002	Demineralized Water Inside CIV	GB	MO	2	A	A	C	ET ST LT PI	CS CS 2Y 2Y	LT per 10 CFR 50, Appendix J

Table 3.9.6-2—Inservice Valve Testing Program Requirements (Sheet 6 of 103)

Valve Identification Number[1]	Description/ Valve Function	Valve Type[2]	Valve Actuator[3]	ASME Code Class[4]	ASME OM Code Category[5]	Active / Passive[6]	Safety Position[7]	Test Required[8,10]	Test Frequency[9]	Comments
30GHC74AA001	Demineralized Water Outside CIV	GB	MO	2	A	A	C	ET ST LT PI	CS CS 2Y 2Y	LT per 10 CFR 50, Appendix J
30JAA10AA501	RPV High Point Vent (PIV)	GB	MO	1	A	P	C	LT PI	2Y 2Y	Pressure Isolation Valve
30JAA10AA502	RPV High Point Vent (PIV)	GB	MO	1	A	P	C	LT PI	2Y 2Y	Pressure Isolation Valve
30JDH10AA191	EBS Pump Discharge Safety Valve	RV	SA	2	C	A	C	ET PI	10Y 2Y	
30JDH40AA191	EBS Pump Discharge Safety Valve	RV	SA	2	C	A	C	ET PI	10Y 2Y	
30JDH10AA006	Extra Boration System Loop 1 and 2 Outside CIV	GB	MO	2	A	A	O/C	ET ST LT PI	Q Q 2Y 2Y	LT per 10 CFR 50, Appendix J
30JDH40AA006	Extra Boration System Loop 3 and 4 Outside CIV	GB	MO	2	A	A	O/C	ET ST LT PI	Q Q 2Y 2Y	LT per 10 CFR 50, Appendix J
30JDH10AA007	Extra Boration System Loop 1 and 2 Inside CIV	CK	SA	2	A/C	A	O/C	ET LT PI	CS 2Y 2Y	LT per 10 CFR 50, Appendix J

Table 3.9.6-2—Inservice Valve Testing Program Requirements (Sheet 7 of 103)

Valve Identification Number[1]	Description/ Valve Function	Valve Type[2]	Valve Actuator[3]	ASME Code Class[4]	ASME OM Code Category[5]	Active / Passive[6]	Safety Position[7]	Test Required[8,10]	Test Frequency[9]	Comments
30JDH40AA007	Extra Boration System Loop 3 and 4 Inside CIV	CK	SA	2	A/C	A	O/C	ET LT PI	CS 2Y 2Y	LT per 10 CFR 50, Appendix J
30JDH10AA015	EBS RCS Isolation Valve	GB	MO	1	A	A	O	ET ST LT PI	Q Q 2Y 2Y	
30JDH20AA015	EBS RCS Isolation Valve	GB	MO	1	A	A	O	ET ST LT PI	Q Q 2Y 2Y	
30JDH30AA015	EBS RCS Isolation Valve	GB	MO	1	A	A	O	ET ST LT PI	Q Q 2Y 2Y	
30JDH40AA015	EBS RCS Isolation Valve	GB	MO	1	A	A	O	ET ST LT PI	Q Q 2Y 2Y	
30JDH20AA194	EBS Thermal Relief Valve	RV	SA	2	C	A	C	ET PI	10Y 2Y	
30JDH30AA194	EBS Thermal Relief Valve	RV	SA	2	C	A	C	ET PI	10Y 2Y	
30JEB10AA191	RCP Thermal Barrier Cooling Water Relief	RV	SA	3	A/C	A	O/C	ET LT	10Y 10Y	

Table 3.9.6-2—Inservice Valve Testing Program Requirements (Sheet 8 of 103)

Valve Identification Number[1]	Description/ Valve Function	Valve Type[2]	Valve Actuator[3]	ASME Code Class[4]	ASME OM Code Category[5]	Active / Passive[6]	Safety Position[7]	Test Required[8,10]	Test Frequency[9]	Comments
30JEB20AA191	RCP Thermal Barrier Cooling Water Relief	RV	SA	3	A/C	A	O/C	ET LT	10Y 10Y	
30JEB30AA191	RCP Thermal Barrier Cooling Water Relief	RV	SA	3	A/C	A	O/C	ET LT	10Y 10Y	
30JEB40AA191	RCP Thermal Barrier Cooling Water Relief	RV	SA	3	A/C	A	O/C	ET LT	10Y 10Y	
30JEF10AA191	Pressurizer Safety Relief	RV	PA/SO	1	A/C	A	O/C	ET LT	5Y 5Y	
30JEF10AA192	Pressurizer Safety Relief	RV	PA/SO	1	A/C	A	O/C	ET LT	5Y 5Y	
30JEF10AA193	Pressurizer Safety Relief	RV	PA/SO	1	A/C	A	O/C	ET LT	5Y 5Y	
30JEF10AA004	Primary Depressurization System (PDS) (PIV)	GT	MO	1	A	P	C	LT PI	2Y 2Y	Pressure Isolation Valve
30JEF10AA005	PDS (PIV)	GB	MO	1	A	P	C	LT PI	2Y 2Y	Pressure Isolation Valve
30JEF10AA006	PDS (PIV)	GT	MO	1	A	P	C	LT PI	2Y 2Y	Pressure Isolation Valve

Table 3.9.6-2—Inservice Valve Testing Program Requirements (Sheet 9 of 103)

Valve Identification Number[1]	Description/ Valve Function	Valve Type[2]	Valve Actuator[3]	ASME Code Class[4]	ASME OM Code Category[5]	Active / Passive[6]	Safety Position[7]	Test Required[8,10]	Test Frequency[9]	Comments
30JEF10AA007	PDS (PIV)	GB	MO	1	A	P	C	LT PI	2Y 2Y	Pressure Isolation Valve
30JEF10AA501	Pressurizer Vacuum Pump/ nitrogen Isolation (PIV)	GB	MO	1	A	P	C	LT PI	2Y 2Y	Pressure Isolation Valve
30JEF10AA502	Pressurizer Vacuum Pump/ nitrogen Isolation (PIV)	GB	MO	1	A	P	C	LT PI	2Y 2Y	Pressure Isolation Valve
30JEWO1AA005	RCP Seal Injection Outside CIV	GB	MO	2	A	A	C	ET ST LT PI	Q Q 2Y 2Y	LT per 10 CFR 50, Appendix J
30JEW01AA006	RCP Seal Injection Inside CIV	CK	SA	2	A/C	A	C	ET LT PI	CS 2Y 2Y	LT per 10 CFR 50, Appendix J
30JEW50AA021	RCP Seal Leakoff to KTA Isolation Valve	GB	MO	3	B	A	O	LT	2Y	
30JEW50AA191	RCP Seal Leakoff Relief Valve	RV	SA	3	C	A	O	ET LT	10Y 10Y	
30JEW50AA001	RCP Seal Leakoff Inside CIV	GB	MO	2	A	A	C	ET ST LT PI	Q Q 2Y 2Y	LT per 10 CFR 50, Appendix J

Table 3.9.6-2—Inservice Valve Testing Program Requirements (Sheet 10 of 103)

Valve Identification Number[1]	Description/ Valve Function	Valve Type[2]	Valve Actuator[3]	ASME Code Class[4]	ASME OM Code Category[5]	Active / Passive[6]	Safety Position[7]	Test Required[8,10]	Test Frequency[9]	Comments
30JEW50AA002	RCP Seal Leakoff Outside CIV	GB	MO	2	A	A	C	ET ST LT PI	Q Q 2Y 2Y	LT per 10 CFR 50, Appendix J
30JMM10AA006	Containment Inflating/deflating (Test Line) Inside CIV	GT	MO	2	A	A	C	ET ST LT PI	Q Q 2Y 2Y	LT per 10 CFR 50, Appendix J
30JMM23AA001	Leak Off (Inside Containment To Annulus) Inside CIV	GB	MO	2	A	A	C	ET ST LT PI	Q Q 2Y 2Y	LT per 10 CFR 50, Appendix J
30JMM21AA010	Leak Off (Outside Containment To Annulus) Inside CIV	GB	MA	2	A	P	C	ET LT PI	CS 2Y 2Y	LT per 10 CFR 50, Appendix J
30JMM30AA001	Pressure Measurement Inside CIV	GB	MA	2	A	P	C	ET LT PI	CS 2Y 2Y	LT per 10 CFR 50, Appendix J
30JMM10AA007	Containment Inflating/ Deflating (Test Line) Outside CIV	GT	MO	2	A	A	C	ET ST LT PI	Q Q 2Y 2Y	LT per 10 CFR 50, Appendix J
30JMM23AA002	Leak Off (Inside Containment To Annulus) Outside CIV	GB	MO	2	A	A	C	ET ST LT PI	Q Q 2Y 2Y	LT per 10 CFR 50, Appendix J

Table 3.9.6-2—Inservice Valve Testing Program Requirements (Sheet 11 of 103)

Valve Identification Number[1]	Description/ Valve Function	Valve Type[2]	Valve Actuator[3]	ASME Code Class[4]	ASME OM Code Category[5]	Active / Passive[6]	Safety Position[7]	Test Required[8,10]	Test Frequency[9]	Comments
30JMM21AA002 - AA008	Leak Off (Outside Containment To Annulus) Outside CIV	GB	MA	2	A	P	C	ET LT PI	CS 2Y 2Y	LT per 10 CFR 50, Appendix J
30JMM30AA003	Pressure Measurement Outside CIV	GB	MA	2	A	P	C	ET LT PI	CS 2Y 2Y	LT per 10 CFR 50, Appendix J
30JMQ40AA001	SAHRS Outside CIV	GB	MO	2	A	A	C	ET ST LT PI	Q Q 2Y 2Y	LT per 10 CFR 50, Appendix J
30JMQ41AA001	SAHRS Outside CIV	GB	MO	2	A	A	C	ET ST LT PI	Q Q 2Y 2Y	LT per 10 CFR 50, Appendix J
30JMQ41AA002	SAHRS Inside CIV	CK	SA	2	A/C	A	O/C	ET LT PI	CS RF 2Y	LT per 10 CFR 50, Appendix J
30JMQ42AA001	SAHRS Outside CIV	GB	MO	2	A	A	C	ET ST LT PI	Q Q 2Y 2Y	LT per 10 CFR 50, Appendix J
30JMQ42AA002	SAHRS Inside CIV	CK	SA	2	A/C	A	O/C	ET LT PI	CS RF 2Y	LT per 10 CFR 50, Appendix J

Table 3.9.6-2—Inservice Valve Testing Program Requirements (Sheet 12 of 103)

Valve Identification Number[1]	Description/ Valve Function	Valve Type[2]	Valve Actuator[3]	ASME Code Class[4]	ASME OM Code Category[5]	Active / Passive[6]	Safety Position[7]	Test Required[8,10]	Test Frequency[9]	Comments
30JMQ43AA001	SAHRS Outside CIV	GB	MO	2	A	A	C	ET ST LT PI	Q Q 2Y 2Y	LT per 10 CFR 50, Appendix J
30JMQ43AA002	SAHRS Inside CIV	CK	SA	2	A/C	A	O/C	ET LT PI	CS RF 2Y	LT per 10 CFR 50, Appendix J
30JNA10AA001	RHR 1st RCPB Isolation Valve (PIV)	GT	MO	1	A	A	O/C	ET LT PI	CS 2Y 2Y	Pressure Isolation Valve
30JNA10AA002	RHR 2nd RCPB Isolation Valve CIV (PIV)	GB	MO	1	A	A	O/C	ET LT PI	CS RF 2Y	LT per 10 CFR 50, Appendix J
30JNA10AA003	RHR Outside CIV	GB	MO	2	A	A	O/C	ET ST LT PI	Q Q 2Y 2Y	LT per 10 CFR 50, Appendix J
30JNA10AA009	RHR 1st RCPB Bypass Check Valve (PIV)	CK	SA	2	A/C	A	O/C	ET LT	CS 2Y	Pressure Isolation Valve
30JNA10AA101	LHSI Heat Exchanger Bypass Control Valve	GB	MO	2	A	A	O/C	ET LT PI	Q 2Y 2Y	
30JNA10AA191	RHR Suction Line Safety Relief Valve	RV	SA	2	C	A	O	ET PI	10Y 2Y	

Table 3.9.6-2—Inservice Valve Testing Program Requirements (Sheet 13 of 103)

Valve Identification Number[1]	Description/ Valve Function	Valve Type[2]	Valve Actuator[3]	ASME Code Class[4]	ASME OM Code Category[5]	Active / Passive[6]	Safety Position[7]	Test Required[8,10]	Test Frequency[9]	Comments
30JNA20AA001	LHSI/RHR Suction Line/RHR Train 2 (PIV)	GT	MO	1	A	A	C	ET ST LT PI	Q Q 2Y 2Y	Pressure Isolation Valve
30JNA20AA002	LHSI/RHR Suction Line/RHR Train 2 Inside CIV (PIV)	GB	MO	1	A	A	C	ET ST LT PI	Q Q 2Y 2Y	LT per 10 CFR 50, Appendix J
30JNA20AA003	LHSI/RHR Suction Line/RHR Train 2 Outside CIV	GB	MO	2	A	A	C	ET ST LT PI	Q Q 2Y 2Y	LT per 10 CFR 50, Appendix J
30JNA20AA009	LHSI/RHR Suction Line/RHR Train 2 (PIV)	Ck	SA	2	A/C	A	O/C	ET LT	CS 2Y	Pressure Isolation Valve
30JNA20AA101	LHSI/RHR Train 2 Hx Bypass	GB	MO	2	A	A	C	ET ST LT PI	Q Q 2Y 2Y	
30JNA20AA191	LHSI/RHR Suction Line/RHR Train 2 Overpressure Protection	RV	SA	2	C	A	C	ET PI	10Y 2Y	

Table 3.9.6-2—Inservice Valve Testing Program Requirements (Sheet 14 of 103)

Valve Identification Number[1]	Description/ Valve Function	Valve Type[2]	Valve Actuator[3]	ASME Code Class[4]	ASME OM Code Category[5]	Active / Passive[6]	Safety Position[7]	Test Required[8,10]	Test Frequency[9]	Comments
30JNA30AA001	LHSI/RHR Suction Line/RHR Train 3 (PIV)	GT	MO	1	A	A	C	ET ST LT PI	Q Q 2Y 2Y	Pressure Isolation Valve
30JNA30AA002	LHSI/RHR Suction Line/RHR Train 3 Inside CIV (PIV)	GB	MO	1	A	A	C	ET ST LT PI	Q Q 2Y 2Y	LT per 10 CFR 50, Appendix J
30JNA30AA003	LHSI/RHR Suction Line/RHR Train 3 Outside CIV	GB	MO	2	A	A	C	ET ST LT PI	Q Q 2Y 2Y	LT per 10 CFR 50, Appendix J
30JNA30AA009	LHSI/RHR Suction Line/RHR Train 3 (PIV)	Ck	SA	2	A/C	A	O/C	ET LT	CS 2Y	Pressure Isolation Valve
30JNA30AA101	LHSI/RHR Train 3 Hx Bypass	GB	MO	2	A	A	C	ET ST LT PI	Q Q 2Y 2Y	
30JNA30AA191	LHSI/RHR Suction Line/RHR Train 3 Overpressure Protection	RV	SA	2	C	A	C	ET PI	10Y 2Y	

Table 3.9.6-2—Inservice Valve Testing Program Requirements (Sheet 15 of 103)

Valve Identification Number[1]	Description/ Valve Function	Valve Type[2]	Valve Actuator[3]	ASME Code Class[4]	ASME OM Code Category[5]	Active / Passive[6]	Safety Position[7]	Test Required[8,10]	Test Frequency[9]	Comments
30JNA40AA001	LHSI/RHR Suction Line/RHR Train 4 (PIV)	GT	MO	1	A	A	C	ET ST LT PI	Q Q 2Y 2Y	Pressure Isolation Valve
30JNA40AA002	LHSI/RHR Suction Line/RHR Train 4 Inside CIV (PIV)	GB	MO	1	A	A	C	ET ST LT PI	Q Q 2Y 2Y	LT per 10 CFR 50, Appendix J
30JNA40AA003	LHSI/RHR Suction Line/RHR Train 4 Outside CIV	GB	MO	2	A	A	C	ET ST LT PI	Q Q 2Y 2Y	LT per 10 CFR 50, Appendix J
30JNA40AA009	LHSI/RHR Suction Line/RHR Train 4 (PIV)	Ck	SA	2	A/C	A	O/C	ET LT	CS 2Y	Pressure Isolation Valve
30JNA40AA101	LHSI/RHR Train 4 Hx Bypass	GB	MO	2	A	A	C	ET ST LT PI	Q Q 2Y 2Y	
30JNA40AA191	LHSI/RHR Suction Line/RHR Train 4 Overpressure Protection	RV	SA	2	C	A	C	ET PI	10Y 2Y	

Table 3.9.6-2—Inservice Valve Testing Program Requirements (Sheet 16 of 103)

Valve Identification Number[1]	Description/ Valve Function	Valve Type[2]	Valve Actuator[3]	ASME Code Class[4]	ASME OM Code Category[5]	Active / Passive[6]	Safety Position[7]	Test Required[8,10]	Test Frequency[9]	Comments
30JNA30AA004	LHSI Heat Exchanger Bypass Isolation Valve on Purification Line to CVCS	GB	MO	2	A	A	C	ET LT PI	Q RF 2Y	
30JNA40AA004	LHSI Heat Exchanger Bypass Isolation Valve on Purification Line to CVCS	GB	MO	2	A	A	C	ET LT PI	Q RF 2Y	
30JNA30AA006	LHSI Heat Exchanger Bypass Check Valve on Purification Line to CVCS	CK	SA	2	C	A	C	ET LT	Q RF	
30JNA40AA006	LHSI Heat Exchanger Bypass Check Valve on Purification Line to CVCS	CK	SA	2	C	A	C	ET LT	Q RF	
30JNA30AA103	LHSI Heat Exchanger Bypass Throttle Valve on Purification Line to CVCS	GB	MO	2	A	A	C	ET LT PI	Q RF 2Y	

Table 3.9.6-2—Inservice Valve Testing Program Requirements (Sheet 17 of 103)

Valve Identification Number[1]	Description/ Valve Function	Valve Type[2]	Valve Actuator[3]	ASME Code Class[4]	ASME OM Code Category[5]	Active / Passive[6]	Safety Position[7]	Test Required[8,10]	Test Frequency[9]	Comments
30JNA40AA103	LHSI Heat Exchanger Bypass Throttle Valve on Purification Line to CVCS	GB	MO	2	A	A	C	ET LT PI	Q RF 2Y	
30JND10AA001	MHSI Suction Isolation Valve	GB	MA	2	A	P	O	ET LT PI	5Y 2Y 2Y	
30JND10AA002	MHSI Outside CIV	GB	MO	2	A	A	O/C	ET ST LT PI	Q Q 2Y 2Y	LT per 10 CFR 50, Appendix J
30JND10AA003	MHSI 2nd RCPB Isolation Valve (PIV)	CK	SA	1	A/C	A	O/C	ET LT	CS 2Y	Pressure Isolation Valve
30JND10AA004	MHSI Small Miniflow Line Isolation Valve	GB	MO	2	A	A	O	ET LT PI	Q 2Y 2Y	
30JND10AA005	MHSI Large Miniflow Line Isolation Valve	GB	MO	2	A	A	O/C	ET LT PI	Q 2Y 2Y	
30JND10AA007	MHSI Inside CIV	CK	SA	2	A/C	A	O/C	ET LT PI	CS RF 2Y	LT per 10 CFR 50, Appendix J
30JND10AA103	MHSI Control Valve	GB	MO	2	A	A	O/C	ET LT PI	Q 2Y 2Y	

Table 3.9.6-2—Inservice Valve Testing Program Requirements (Sheet 18 of 103)

Valve Identification Number[1]	Description/ Valve Function	Valve Type[2]	Valve Actuator[3]	ASME Code Class[4]	ASME OM Code Category[5]	Active / Passive[6]	Safety Position[7]	Test Required[8,10]	Test Frequency[9]	Comments
30JND20AA001	MHSI Suction Isolation Valve	GB	MA	2	A	P	O	ET LT PI	5Y 2Y 2Y	
30JND20AA002	MHSI Outside CIV	GB	MO	2	A	A	O/C	ET ST LT PI	Q Q 2Y 2Y	LT per 10 CFR 50, Appendix J
30JND20AA003	MHSI 2nd RCPB Isolation Valve (PIV)	CK	SA	1	A/C	A	O/C	ET LT	CS 2Y	Pressure Isolation Valve
30JND20AA004	MHSI Small Miniflow Line Isolation Valve	GB	MO	2	A	A	O	ET LT PI	Q 2Y 2Y	
30JND20AA005	MHSI Large Miniflow Line Isolation Valve	GB	MO	2	A	A	O/C	ET LT PI	Q 2Y 2Y	
30JND20AA007	MHSI Inside CIV	CK	SA	2	A/C	A	O/C	ET LT PI	CS RF 2Y	LT per 10 CFR 50, Appendix J
30JND20AA103	MHSI Control Valve	GB	MO	2	A	A	O/C	ET LT PI	Q 2Y 2Y	
30JND30AA001	MHSI Suction Isolation Valve	GB	MA	2	A	P	O	ET LT PI	5Y 2Y 2Y	

Table 3.9.6-2—Inservice Valve Testing Program Requirements (Sheet 19 of 103)

Valve Identification Number[1]	Description/ Valve Function	Valve Type[2]	Valve Actuator[3]	ASME Code Class[4]	ASME OM Code Category[5]	Active / Passive[6]	Safety Position[7]	Test Required[8,10]	Test Frequency[9]	Comments
30JND30AA002	MHSI Outside CIV	GB	MO	2	A	A	O/C	ET ST LT PI	Q Q 2Y 2Y	LT per 10 CFR 50, Appendix J
30JND30AA003	MHSI 2nd RCPB Isolation Valve (PIV)	CK	SA	1	A/C	A	O/C	ET LT	CS 2Y	Pressure Isolation Valve
30JND30AA004	MHSI Small Miniflow Line Isolation Valve	GB	MO	2	A	A	O	ET LT PI	Q 2Y 2Y	
30JND30AA005	MHSI Large Miniflow Line Isolation Valve	GB	MO	2	A	A	O/C	ET LT PI	Q 2Y 2Y	
30JND30AA007	MHSI Inside CIV	CK	SA	2	A/C	A	O/C	ET LT PI	CS RF 2Y	LT per 10 CFR 50, Appendix J
30JND30AA103	MHSI Control Valve	GB	MO	2	A	A	O/C	ET LT PI	Q 2Y 2Y	
30JND40AA001	MHSI Suction Isolation Valve	GB	MA	2	A	P	O	ET LT PI	5Y 2Y 2Y	
30JND40AA002	MHSI Outside CIV	GB	MO	2	A	A	O/C	ET ST LT PI	Q Q 2Y 2Y	LT per 10 CFR 50, Appendix J

Table 3.9.6-2—Inservice Valve Testing Program Requirements (Sheet 20 of 103)

Valve Identification Number[1]	Description/ Valve Function	Valve Type[2]	Valve Actuator[3]	ASME Code Class[4]	ASME OM Code Category[5]	Active / Passive[6]	Safety Position[7]	Test Required[8,10]	Test Frequency[9]	Comments
30JND40AA003	MHSI 2nd RCPB Isolation Valve (PIV)	CK	SA	1	A/C	A	O/C	ET LT	CS 2Y	Pressure Isolation Valve
30JND40AA004	MHSI Small Miniflow Line Isolation Valve	GB	MO	2	A	A	O	ET LT PI	Q 2Y 2Y	
30JND40AA005	MHSI Large Miniflow Line Isolation Valve	GB	MO	2	A	A	O/C	ET LT PI	Q 2Y 2Y	
30JND40AA007	MHSI Inside CIV	CK	SA	2	A/C	A	O/C	ET LT PI	CS RF 2Y	LT per 10 CFR 50, Appendix J
30JND40AA103	MHSI Control Valve	GB	MO	2	A	A	O/C	ET LT PI	Q 2Y 2Y	
30JNG10AA192	LHSI Discharge Line Safety Relief Valve	RV	SA	2	C	A	O	ET PI	10Y 2Y	
30JNG10AA001	LHSI Suction Isolation Valve	GT	MO	2	A	A	O/C	ET LT PI	Q 2Y 2Y	
30JNG10AA003	LHSI Radial Miniflow Line Check Valve	CK	SA	2	C	A	C	ET LT PI	Q 2Y 2Y	

Table 3.9.6-2—Inservice Valve Testing Program Requirements (Sheet 21 of 103)

Valve Identification Number[1]	Description/ Valve Function	Valve Type[2]	Valve Actuator[3]	ASME Code Class[4]	ASME OM Code Category[5]	Active / Passive[6]	Safety Position[7]	Test Required[8,10]	Test Frequency[9]	Comments
30JNG10AA004	LHSI Tangential Miniflow Line Check Valve	CK	SA	2	C	A	O/C	ET LT PI	Q 2Y 2Y	
30JNG10AA006	LHSI 2nd RCPB Isolation Valve (PIV)	CK	SA	1	A/C	A	O/C	ET LT	CS 2Y	Pressure Isolation Valve
30JNG10AA009	LHSI Inside CIV	CK	SA	2	A/C	A	O/C	ET LT PI	CS RF 2Y	LT per 10 CFR 50, Appendix J
30JNG10AA010	LHSI Cross-Connect Isolation Valve	GT	MO	2	A	P	O/C	ET LT PI	Q 2Y 2Y	
30JNG10AA011	LHSI Cross-Connect Check Valve	CK	SA	2	C	A	O/C	ET LT	CS 2Y	
30JNG10AA012	Cross-Connect Bypass Check Valve	CK	SA	2	C	A	O/C	ET LT	CS 2Y	
30JNG10AA060	LHSI Outside Main CIV	GB	MO	2	A	A	O/C	ET ST LT PI	Q Q 2Y 2Y	LT per 10 CFR 50, Appendix J
30JNG10AA061	LHSI Outside Bypass CIV	GB	MO	2	A	A	O/C	ET ST LT PI	Q Q 2Y 2Y	LT per 10 CFR 50, Appendix J

Table 3.9.6-2—Inservice Valve Testing Program Requirements (Sheet 22 of 103)

Valve Identification Number[1]	Description/ Valve Function	Valve Type[2]	Valve Actuator[3]	ASME Code Class[4]	ASME OM Code Category[5]	Active / Passive[6]	Safety Position[7]	Test Required[8,10]	Test Frequency[9]	Comments
30JNG10AA102	LHSI Heat Exchanger Main Control Valve	GB	MO	2	A	A	O/C	ET LT PI	Q 2Y 2Y	
30JNG10AA106~~3~~	LHSI Control Valve	GB	MO	2	A	A	O/C	ET LT PI	Q 2Y 2Y	
30JNG12AA002	LHSI Hot Leg Injection Check Valve	CK	SA	2	C	A	O/C	ET LT	CS 2Y	
30JNG12AA001	LHSI Hot Leg Injection Isolation Valve	GB	MO	2	A	A	O/C	ET LT PI	Q RF 2Y	LT per 10 CFR 50, Appendix J
30JNG13AA101	Accumulator Depressurization Control Valve	GB	MO	2	A	P	C	ET LT PI	Q 2Y 2Y	
30JNG13AA002	Accumulator Filling Line Isolation Valve	GB	MO	2	A	A	C	ET LT PI	Q 2Y 2Y	
30JNG13AA003	Accumulator Filling Line Check Valve	CK	SA	2	C	P	C	ET LT	CS 2Y	
30JNG13AA005	SIS 1st RCPB Isolation Valve (PIV)	CK	SA	1	A/C	A	O/C	ET LT	CS 2Y	Pressure Isolation Valve

Table 3.9.6-2—Inservice Valve Testing Program Requirements (Sheet 23 of 103)

Valve Identification Number[1]	Description/ Valve Function	Valve Type[2]	Valve Actuator[3]	ASME Code Class[4]	ASME OM Code Category[5]	Active / Passive[6]	Safety Position[7]	Test Required[8,10]	Test Frequency[9]	Comments
30JNG13AA006	Accumulator-Nitrogen Distribution Isolation Valve	GB	MO	2	A	P	C	ET LT PI	Q 2Y 2Y	
30JNG13AA007	Accumulator-Nitrogen Distribution Check Valve	CK	SA	2	C	P	C	ET LT	CS 2Y	
30JNG13AA008	Accumulator Isolation Valve	GT	MO	2	A	A	O/C	ET LT PI	Q 2Y 2Y	
30JNG13AA009	Accumulator Check Valve (PIV)	CK	SA	1	A/C	A	O/C	ET LT	CS 2Y	Pressure Isolation Valve
30JNG13AA197	Accumulator Safety Relief Valve	RV	SA	2	C	A	O	ET PI	10Y 2Y	
30JNG13AA502	Accumulator Depressurization Isolation Valve	GB	MO	2	A	P	C	ET LT PI	Q 2Y 2Y	
30JNG15AA001	Dead Leg Pressurization Valve	GB	MO	1	A	A	C	ET LT PI	CS 2Y 2Y	
30JNG15AA002	RCS Suction Line Pressurization Valve	GB	MO	1	A	A	C	ET LT PI	CS 2Y 2Y	

Table 3.9.6-2—Inservice Valve Testing Program Requirements (Sheet 24 of 103)

Valve Identification Number[1]	Description/ Valve Function	Valve Type[2]	Valve Actuator[3]	ASME Code Class[4]	ASME OM Code Category[5]	Active / Passive[6]	Safety Position[7]	Test Required[8,10]	Test Frequency[9]	Comments
30JNG15AA003	Dead Leg Pressure Bypass Isolation Valve (PIV)	GB	MO	2	A	A	C	ET LT PI	CS 2Y 2Y	Pressure Isolation Valve
30JNG15AA004	Dead Leg Pressure Control Isolation Valve (PIV)	GB	MO	1	A	A	C	ET LT PI	CS RF 2Y	Pressure Isolation Valve
30JNG15AA005	Dead Leg Pressurization Bypass Check Valve (PIV)	CK	SA	1	A/C	A	O/C	ET LT	CS 2Y	Pressure Isolation Valve
30JNG20AA192	LHSI Discharge Line Safety Relief Valve	RV	SA	2	C	A	O	ET PI	10Y 2Y	
30JNG20AA001	LHSI Suction Isolation Valve	GT	MO	2	A	A	O/C	ET LT PI	Q 2Y 2Y	
30JNG20AA003	LHSI Radial Miniflow Line Check Valve	CK	SA	2	C	A	C	ET LT PI	Q 2Y 2Y	
30JNG20AA004	LHSI Tangential Miniflow Line Check Valve	CK	SA	2	C	A	O/C	ET LT PI	Q 2Y 2Y	
30JNG20AA006	LHSI 2nd RCPB Isolation Valve (PIV)	CK	SA	1	A/C	A	O/C	ET LT	CS 2Y	Pressure Isolation Valve

Table 3.9.6-2—Inservice Valve Testing Program Requirements (Sheet 25 of 103)

Valve Identification Number[1]	Description/ Valve Function	Valve Type[2]	Valve Actuator[3]	ASME Code Class[4]	ASME OM Code Category[5]	Active / Passive[6]	Safety Position[7]	Test Required[8,10]	Test Frequency[9]	Comments
30JNG20AA009	LHSI Inside CIV	CK	SA	2	A/C	A	O/C	ET LT PI	CS RF 2Y	LT per 10 CFR 50, Appendix J
30JNG20AA010	LHSI Cross-Connect Isolation Valve	GT	MO	2	A	P	O/C	ET LT PI	Q 2Y 2Y	
30JNG20AA011	LHSI Cross-Connect Check Valve	CK	SA	2	C	A	O/C	ET LT	CS 2Y	
30JNG20AA060	LHSI Outside Main CIV	GB	MO	2	A	A	O/C	ET ST LT PI	Q Q 2Y 2Y	LT per 10 CFR 50, Appendix J
30JNG20AA061	LHSI Outside Bypass CIV	GB	MO	2	A	A	O/C	ET ST LT PI	Q Q 2Y 2Y	LT per 10 CFR 50, Appendix J
30JNG20AA102	LHSI Heat Exchanger Main Control Valve	GB	MO	2	A	A	O/C	ET LT PI	Q 2Y 2Y	
30JNG20AA106~~3~~	LHSI Control Valve	GB	MO	2	A	A	O/C	ET LT PI	Q 2Y 2Y	
30JNG22AA002	LHSI Hot Leg Injection Check Valve	CK	SA	2	C	A	O/C	ET LT	CS 2Y	

Table 3.9.6-2—Inservice Valve Testing Program Requirements (Sheet 26 of 103)

Valve Identification Number[1]	Description/ Valve Function	Valve Type[2]	Valve Actuator[3]	ASME Code Class[4]	ASME OM Code Category[5]	Active / Passive[6]	Safety Position[7]	Test Required[8,10]	Test Frequency[9]	Comments
30JNG22AA001	LHSI Hot Leg Injection Isolation Valve	GB	MO	2	A	A	O/C	ET LT PI	Q RF 2Y	LT per 10 CFR 50, Appendix J
30JNG23AA002	Accumulator Filling Line Isolation Valve	GB	MO	2	A	A	C	ET LT PI	Q 2Y 2Y	
30JNG23AA006	Accumulator-Nitrogen Distribution Isolation Valve	GB	MO	2	A	P	C	ET LT PI	Q 2Y 2Y	
30JNG23AA002	Accumulator Filling Line Isolation Valve	GB	MO	2	A	A	C	ET LT PI	Q 2Y 2Y	
30JNG23AA003	Accumulator Filling Line Check Valve	CK	SA	2	C	P	C	ET LT	CS 2Y	
30JNG23AA003	Accumulator Filling Line Check Valve	CK	SA	2	C	P	C	ET LT	CS 2Y	
30JNG23AA005	SIS 1st RCPB Isolation Valve (PIV)	CK	SA	1	A/C	A	O/C	ET LT	CS 2Y	Pressure Isolation Valve
30JNG23AA005	SIS 1st RCPB Isolation Valve (PIV)	CK	SA	1	A/C	A	O/C	ET LT	CS 2Y	Pressure Isolation Valve

Table 3.9.6-2—Inservice Valve Testing Program Requirements (Sheet 27 of 103)

Valve Identification Number[1]	Description/ Valve Function	Valve Type[2]	Valve Actuator[3]	ASME Code Class[4]	ASME OM Code Category[5]	Active / Passive[6]	Safety Position[7]	Test Required[8,10]	Test Frequency[9]	Comments
30JNG23AA006	Accumulator-Nitrogen Distribution Isolation Valve	GB	MO	2	A	P	C	ET LT PI	Q 2Y 2Y	
30JNG23AA007	Accumulator-Nitrogen Distribution Check Valve	CK	SA	2	C	P	C	ET LT	CS 2Y	
30JNG23AA007	Accumulator-Nitrogen Distribution Check Valve	CK	SA	2	C	P	C	ET LT	CS 2Y	
30JNG23AA008	Accumulator Isolation Valve	GT	MO	2	A	A	O/C	ET LT PI	Q 2Y 2Y	
30JNG23AA008	Accumulator Isolation Valve	GT	MO	2	A	A	O/C	ET LT PI	Q 2Y 2Y	
30JNG23AA009	Accumulator Check Valve (PIV)	CK	SA	1	A/C	A	O/C	ET LT	CS 2Y	Pressure Isolation Valve
30JNG23AA009	Accumulator Check Valve (PIV)	CK	SA	1	A/C	A	O/C	ET LT	CS 2Y	Pressure Isolation Valve
30JNG23AA101	Accumulator Depressurization Control Valve	GB	MO	2	A	P	C	ET LT PI	Q 2Y 2Y	

Table 3.9.6-2—Inservice Valve Testing Program Requirements (Sheet 28 of 103)

Valve Identification Number[1]	Description/ Valve Function	Valve Type[2]	Valve Actuator[3]	ASME Code Class[4]	ASME OM Code Category[5]	Active / Passive[6]	Safety Position[7]	Test Required[8,10]	Test Frequency[9]	Comments
30JNG23AA101	Accumulator Depressurization Control Valve	GB	MO	2	A	P	C	ET LT PI	Q 2Y 2Y	
30JNG23AA197	Accumulator Safety Relief Valve	RV	SA	2	C	A	O	ET PI	10Y 2Y	
30JNG23AA197	Accumulator Safety Relief Valve	RV	SA	2	C	A	O	ET PI	10Y 2Y	
30JNG23AA502	Accumulator Depressurization Isolation Valve	GB	MO	2	A	P	C	ET LT PI	Q 2Y 2Y	
30JNG23AA502	Accumulator Depressurization Isolation Valve	GB	MO	2	A	P	C	ET LT PI	Q 2Y 2Y	
30JNG25AA001	Dead Leg Pressurization Valve	GB	MO	1	A	A	C	ET LT PI	CS 2Y 2Y	
30JNG25AA002	RCS Suction Line Pressurization Valve	GB	MO	1	A	A	C	ET LT PI	CS 2Y 2Y	
30JNG25AA003	Dead Leg Pressure Bypass Isolation Valve (PIV)	GB	MO	2	A	A	C	ET LT PI	CS 2Y 2Y	Pressure Isolation Valve
30JNG25AA004	Dead Leg Pressure Control Isolation Valve (PIV)	GB	MO	1	A	A	C	ET LT PI	CS RF 2Y	Pressure Isolation Valve

Table 3.9.6-2—Inservice Valve Testing Program Requirements (Sheet 29 of 103)

Valve Identification Number[1]	Description/ Valve Function	Valve Type[2]	Valve Actuator[3]	ASME Code Class[4]	ASME OM Code Category[5]	Active / Passive[6]	Safety Position[7]	Test Required[8,10]	Test Frequency[9]	Comments
30JNG25AA005	Dead Leg Pressurization Bypass Check Valve (PIV)	CK	SA	1	A/C	A	O/C	ET LT	CS 2Y	Pressure Isolation Valve
30JNG30AA192	LHSI Discharge Line Safety Relief Valve	RV	SA	2	C	A	O	ET PI	10Y 2Y	
30JNG30AA001	LHSI Suction Isolation Valve	GT	MO	2	A	A	O/C	ET LT PI	Q 2Y 2Y	
30JNG30AA003	LHSI Radial Miniflow Line Check Valve	CK	SA	2	C	A	C	ET LT PI	Q 2Y 2Y	
30JNG30AA004	LHSI Tangential Miniflow Line Check Valve	CK	SA	2	C	A	O/C	ET LT PI	Q 2Y 2Y	
30JNG30AA006	LHSI 2nd RCPB Isolation Valve (PIV)	CK	SA	1	A/C	A	O/C	ET LT	CS 2Y	Pressure Isolation Valve
30JNG30AA009	LHSI Inside CIV	CK	SA	2	A/C	A	O/C	ET LT PI	CS RF 2Y	LT per 10 CFR 50, Appendix J
30JNG30AA010	LHSI Cross-Connect Isolation Valve	GT	MO	2	A	P	O/C	ET LT PI	Q 2Y 2Y	

Table 3.9.6-2—Inservice Valve Testing Program Requirements (Sheet 30 of 103)

Valve Identification Number[1]	Description/ Valve Function	Valve Type[2]	Valve Actuator[3]	ASME Code Class[4]	ASME OM Code Category[5]	Active / Passive[6]	Safety Position[7]	Test Required[8,10]	Test Frequency[9]	Comments
30JNG30AA011	LHSI Cross-Connect Check Valve	CK	SA	2	C	A	O/C	ET LT	CS 2Y	
30JNG30AA060	LHSI Outside Main CIV	GB	MO	2	A	A	O/C	ET ST LT PI	Q Q 2Y 2Y	LT per 10 CFR 50, Appendix J
30JNG30AA061	LHSI Outside Bypass CIV	GB	MO	2	A	A	O/C	ET ST LT PI	Q Q 2Y 2Y	LT per 10 CFR 50, Appendix J
30JNG30AA102	LHSI Heat Exchanger Main Control Valve	GB	MO	2	A	A	O/C	ET LT PI	Q 2Y 2Y	
30JNG30AA106~~3~~	LHSI Control Valve	GB	MO	2	A	A	O/C	ET LT PI	Q 2Y 2Y	
30JNG32AA002	LHSI Hot Leg Injection Check Valve	CK	SA	2	C	A	O/C	ET LT	CS 2Y	
30JNG32AA001	LHSI Hot Leg Injection Isolation Valve	GB	MO	2	A	A	O/C	ET LT PI	Q RF 2Y	LT per 10 CFR 50, Appendix J
30JNG33AA002	Accumulator Filling Line Isolation Valve	GB	MO	2	A	A	C	ET LT PI	Q 2Y 2Y	

Table 3.9.6-2—Inservice Valve Testing Program Requirements (Sheet 31 of 103)

Valve Identification Number[1]	Description/ Valve Function	Valve Type[2]	Valve Actuator[3]	ASME Code Class[4]	ASME OM Code Category[5]	Active / Passive[6]	Safety Position[7]	Test Required[8,10]	Test Frequency[9]	Comments
30JNG33AA002	Accumulator Filling Line Isolation Valve	GB	MO	2	A	A	C	ET LT PI	Q 2Y 2Y	
30JNG33AA003	Accumulator Filling Line Check Valve	CK	SA	2	C	P	C	ET LT	CS 2Y	
30JNG33AA003	Accumulator Filling Line Check Valve	CK	SA	2	C	P	C	ET LT	CS 2Y	
30JNG33AA005	SIS 1st RCPB Isolation Valve (PIV)	CK	SA	1	A/C	A	O/C	ET LT	CS 2Y	Pressure Isolation Valve
30JNG33AA005	SIS 1st RCPB Isolation Valve (PIV)	CK	SA	1	A/C	A	O/C	ET LT	CS 2Y	Pressure Isolation Valve
30JNG33AA006	Accumulator-Nitrogen Distribution Isolation Valve	GB	MO	2	A	P	C	ET LT PI	Q 2Y 2Y	
30JNG33AA006	Accumulator-Nitrogen Distribution Isolation Valve	GB	MO	2	A	P	C	ET LT PI	Q 2Y 2Y	
30JNG33AA007	Accumulator-Nitrogen Distribution Check Valve	CK	SA	2	C	P	C	ET LT	CS 2Y	

Table 3.9.6-2—Inservice Valve Testing Program Requirements (Sheet 32 of 103)

Valve Identification Number[1]	Description/ Valve Function	Valve Type[2]	Valve Actuator[3]	ASME Code Class[4]	ASME OM Code Category[5]	Active / Passive[6]	Safety Position[7]	Test Required[8,10]	Test Frequency[9]	Comments
30JNG33AA007	Accumulator-Nitrogen Distribution Check Valve	CK	SA	2	C	P	C	ET LT	CS 2Y	
30JNG33AA008	Accumulator Isolation Valve	GT	MO	2	A	A	O/C	ET LT PI	Q 2Y 2Y	
30JNG33AA008	Accumulator Isolation Valve	GT	MO	2	A	A	O/C	ET LT PI	Q 2Y 2Y	
30JNG33AA009	Accumulator Check Valve (PIV)	CK	SA	1	A/C	A	O/C	ET LT	CS 2Y	Pressure Isolation Valve
30JNG33AA009	Accumulator Check Valve (PIV)	CK	SA	1	A/C	A	O/C	ET LT	CS 2Y	Pressure Isolation Valve
30JNG33AA101	Accumulator Depressurization Control Valve	GB	MO	2	A	P	C	ET LT PI	Q 2Y 2Y	
30JNG33AA101	Accumulator Depressurization Control Valve	GB	MO	2	A	P	C	ET LT PI	Q 2Y 2Y	
30JNG33AA197	Accumulator Safety Relief Valve	RV	SA	2	C	A	O	ET PI	10Y 2Y	

Table 3.9.6-2—Inservice Valve Testing Program Requirements (Sheet 33 of 103)

Valve Identification Number[1]	Description/ Valve Function	Valve Type[2]	Valve Actuator[3]	ASME Code Class[4]	ASME OM Code Category[5]	Active / Passive[6]	Safety Position[7]	Test Required[8,10]	Test Frequency[9]	Comments
30JNG33AA197	Accumulator Safety Relief Valve	RV	SA	2	C	A	O	ET PI	10Y 2Y	
30JNG33AA502	Accumulator Depressurization Isolation Valve	GB	MO	2	A	P	C	ET LT PI	Q 2Y 2Y	
30JNG33AA502	Accumulator Depressurization Isolation Valve	GB	MO	2	A	P	C	ET LT PI	Q 2Y 2Y	
30JNG35AA001	Dead Leg Pressurization Valve	GB	MO	1	A	A	C	ET LT PI	CS 2Y 2Y	
30JNG35AA005	Dead Leg Pressurization Bypass Check Valve (PIV)	CK	SA	1	A/C	A	O/C	ET LT	CS 2Y	Pressure Isolation Valve
30JNG35AA002	RCS Suction Line Pressurization Valve	GB	MO	1	A	A	C	ET LT PI	CS 2Y 2Y	
30JNG35AA003	Dead Leg Pressure Bypass Isolation Valve (PIV)	GB	MO	2	A	A	C	ET LT PI	CS 2Y 2Y	Pressure Isolation Valve
30JNG35AA004	Dead Leg Pressure Control Isolation Valve (PIV)	GB	MO	1	A	A	C	ET LT PI	CS RF 2Y	Pressure Isolation Valve

Table 3.9.6-2—Inservice Valve Testing Program Requirements (Sheet 34 of 103)

Valve Identification Number[1]	Description/ Valve Function	Valve Type[2]	Valve Actuator[3]	ASME Code Class[4]	ASME OM Code Category[5]	Active / Passive[6]	Safety Position[7]	Test Required[8,10]	Test Frequency[9]	Comments
30JNG40AA192	LHSI Discharge Line Safety Relief Valve	RV	SA	2	C	A	O	ET PI	10Y 2Y	
30JNG40AA001	LHSI Suction Isolation Valve	GT	MO	2	A	A	O/C	ET LT PI	Q 2Y 2Y	
30JNG40AA003	LHSI Radial Miniflow Line Check Valve	CK	SA	2	C	A	C	ET LT PI	Q 2Y 2Y	
30JNG40AA004	LHSI Tangential Miniflow Line Check Valve	CK	SA	2	C	A	O/C	ET LT PI	Q 2Y 2Y	
30JNG40AA006	LHSI 2nd RCPB Isolation Valve (PIV)	CK	SA	1	A/C	A	O/C	ET LT	CS 2Y	Pressure Isolation Valve
30JNG40AA007	SAHRS-IRWSTS 1st Isolation Valve	GB	MO	2	A	A	C	ET LT PI	Q 2Y 2Y	
30JNG40AA008	SAHRS-IRWSTS 2nd Isolation Valve	GB	MO	2	A	A	C	ET LT PI	Q 2Y 2Y	
30JNG40AA009	LHSI Inside CIV	CK	SA	2	A/C	A	O/C	ET LT PI	CS RF 2Y	LT per 10 CFR 50, Appendix J

Table 3.9.6-2—Inservice Valve Testing Program Requirements (Sheet 35 of 103)

Valve Identification Number[1]	Description/ Valve Function	Valve Type[2]	Valve Actuator[3]	ASME Code Class[4]	ASME OM Code Category[5]	Active / Passive[6]	Safety Position[7]	Test Required[8,10]	Test Frequency[9]	Comments
30JNG40AA010	LHSI Cross-Connect Isolation Valve	GT	MO	2	A	P	O/C	ET LT PI	Q 2Y 2Y	
30JNG40AA011	LHSI Cross-Connect Check Valve	CK	SA	2	C	A	O/C	ET LT	CS 2Y	
30JNG40AA012	Cross-Connect Bypass Check Valve	CK	SA	2	C	A	O/C	ET LT	CS 2Y	
30JNG40AA060	LHSI Outside Main CIV	GB	MO	2	A	A	O/C	ET ST LT PI	Q Q 2Y 2Y	LT per 10 CFR 50, Appendix J
30JNG40AA061	LHSI Outside Bypass CIV	GB	MO	2	A	A	O/C	ET ST LT PI	Q Q 2Y 2Y	LT per 10 CFR 50, Appendix J
30JNG40AA102	LHSI Heat Exchanger Main Control Valve	GB	MO	2	A	A	O/C	ET LT PI	Q 2Y 2Y	
30JNG40AA106~~3~~	LHSI Control Valve	GB	MO	2	A	A	O/C	ET LT PI	Q 2Y 2Y	
30JNG42AA002	LHSI Hot Leg Injection Check Valve	CK	SA	2	C	A	O/C	ET LT	CS 2Y	

Table 3.9.6-2—Inservice Valve Testing Program Requirements (Sheet 36 of 103)

Valve Identification Number[1]	Description/ Valve Function	Valve Type[2]	Valve Actuator[3]	ASME Code Class[4]	ASME OM Code Category[5]	Active / Passive[6]	Safety Position[7]	Test Required[8,10]	Test Frequency[9]	Comments
30JNG42AA001	LHSI Hot Leg Injection Isolation Valve	GB	MO	2	A	A	O/C	ET LT PI	Q RF 2Y	LT per 10 CFR 50, Appendix J
30JNG43AA002	Accumulator Filling Line Isolation Valve	GB	MO	2	A	A	C	ET LT PI	Q 2Y 2Y	
30JNG43AA002	Accumulator Filling Line Isolation Valve	GB	MO	2	A	A	C	ET LT PI	Q 2Y 2Y	
30JNG43AA003	Accumulator Filling Line Check Valve	CK	SA	2	C	P	C	ET LT	CS 2Y	
30JNG43AA003	Accumulator Filling Line Check Valve	CK	SA	2	C	P	C	ET LT	CS 2Y	
30JNG43AA005	SIS 1st RCPB Isolation Valve (PIV)	CK	SA	1	A/C	A	O/C	ET LT	CS 2Y	Pressure Isolation Valve
30JNG43AA005	SIS 1st RCPB Isolation Valve (PIV)	CK	SA	1	A/C	A	O/C	ET LT	CS 2Y	Pressure Isolation Valve
30JNG43AA006	Accumulator-Nitrogen Distribution Isolation Valve	GB	MO	2	A	P	C	ET LT PI	Q 2Y 2Y	

Table 3.9.6-2—Inservice Valve Testing Program Requirements (Sheet 37 of 103)

Valve Identification Number[1]	Description/ Valve Function	Valve Type[2]	Valve Actuator[3]	ASME Code Class[4]	ASME OM Code Category[5]	Active / Passive[6]	Safety Position[7]	Test Required[8,10]	Test Frequency[9]	Comments
30JNG43AA006	Accumulator-Nitrogen Distribution Isolation Valve	GB	MO	2	A	P	C	ET LT PI	Q 2Y 2Y	
30JNG43AA007	Accumulator-Nitrogen Distribution Check Valve	CK	SA	2	C	P	C	ET LT	CS 2Y	
30JNG43AA007	Accumulator-Nitrogen Distribution Check Valve	CK	SA	2	C	P	C	ET LT	CS 2Y	
30JNG43AA008	Accumulator Isolation Valve	GT	MO	2	A	A	O/C	ET LT PI	Q 2Y 2Y	
30JNG43AA008	Accumulator Isolation Valve	GT	MO	2	A	A	O/C	ET LT PI	Q 2Y 2Y	
30JNG43AA009	Accumulator Check Valve (PIV)	CK	SA	1	A/C	A	O/C	ET LT	CS 2Y	Pressure Isolation Valve
30JNG43AA009	Accumulator Check Valve (PIV)	CK	SA	1	A/C	A	O/C	ET LT	CS 2Y	Pressure Isolation Valve
30JNG43AA101	Accumulator Depressurization Control Valve	GB	MO	2	A	P	C	ET LT PI	Q 2Y 2Y	

Table 3.9.6-2—Inservice Valve Testing Program Requirements (Sheet 38 of 103)

Valve Identification Number[1]	Description/ Valve Function	Valve Type[2]	Valve Actuator[3]	ASME Code Class[4]	ASME OM Code Category[5]	Active / Passive[6]	Safety Position[7]	Test Required[8,10]	Test Frequency[9]	Comments
30JNG43AA101	Accumulator Depressurization Control Valve	GB	MO	2	A	P	C	ET LT PI	Q 2Y 2Y	
30JNG43AA197	Accumulator Safety Relief Valve	RV	SA	2	C	A	O	ET PI	10Y 2Y	
30JNG43AA197	Accumulator Safety Relief Valve	RV	SA	2	C	A	O	ET PI	10Y 2Y	
30JNG43AA502	Accumulator Depressurization Isolation Valve	GB	MO	2	A	P	C	ET LT PI	Q 2Y 2Y	
30JNG43AA502	Accumulator Depressurization Isolation Valve	GB	MO	2	A	P	C	ET LT PI	Q 2Y 2Y	
30JNG45AA001	Dead Leg Pressurization Valve	GB	MO	1	A	A	C	ET LT PI	CS 2Y 2Y	
30JNG45AA002	RCS Suction Line Pressurization Valve	GB	MO	1	A	A	C	ET LT PI	CS 2Y 2Y	
30JNG45AA003	Dead Leg Pressure Bypass Isolation Valve (PIV)	GB	MO	2	A	A	C	ET LT PI	CS 2Y 2Y	Pressure Isolation Valve
30JNG45AA004	Dead Leg Pressure Control Isolation Valve (PIV)	GB	MO	1	A	A	C	ET LT PI	CS RF 2Y	Pressure Isolation Valve

Table 3.9.6-2—Inservice Valve Testing Program Requirements (Sheet 39 of 103)

Valve Identification Number[1]	Description/ Valve Function	Valve Type[2]	Valve Actuator[3]	ASME Code Class[4]	ASME OM Code Category[5]	Active / Passive[6]	Safety Position[7]	Test Required[8,10]	Test Frequency[9]	Comments
30JNG45AA005	Dead Leg Pressurization Bypass Check Valve (PIV)	CK	SA	1	A/C	A	O/C	ET LT	CS 2Y	Pressure Isolation Valve
30JNG10AA601	LHSI Sampling Line Isolation Valve	GB	MO	2	A	A	C	ET LT PI	Q RF 2Y	
30JNG20AA601	LHSI Sampling Line Isolation Valve	GB	MO	2	A	A	C	ET LT PI	Q RF 2Y	
30JNG30AA601	LHSI Sampling Line Isolation Valve	GB	MO	2	A	A	C	ET LT PI	Q RF 2Y	
30JNG40AA601	LHSI Sampling Line Isolation Valve	GB	MO	2	A	A	C	ET LT PI	Q RF 2Y	
30JNG10AA602	LHSI Sampling Line Isolation Valve	GB	MO	2	A	A	C	ET LT PI	Q RF 2Y	
30JNG20AA602	LHSI Sampling Line Isolation Valve	GB	MO	2	A	A	C	ET LT PI	Q RF 2Y	
30JNG30AA602	LHSI Sampling Line Isolation Valve	GB	MO	2	A	A	C	ET LT PI	Q RF 2Y	

Table 3.9.6-2—Inservice Valve Testing Program Requirements (Sheet 40 of 103)

Valve Identification Number[1]	Description/ Valve Function	Valve Type[2]	Valve Actuator[3]	ASME Code Class[4]	ASME OM Code Category[5]	Active / Passive[6]	Safety Position[7]	Test Required[8,10]	Test Frequency[9]	Comments
30JNG40AA602	LHSI Sampling Line Isolation Valve	GB	MO	2	A	A	C	ET LT PI	Q RF 2Y	
30JNG10AA603	LHSI Sampling Line Isolation Valve	GB	MO	2	A	A	C	ET LT PI	Q RF 2Y	
30JNG20AA603	LHSI Sampling Line Isolation Valve	GB	MO	2	A	A	C	ET LT PI	Q RF 2Y	
30JNG30AA603	LHSI Sampling Line Isolation Valve	GB	MO	2	A	A	C	ET LT PI	Q RF 2Y	
30JNG40AA603	LHSI Sampling Line Isolation Valve	GB	MO	2	A	A	C	ET LT PI	Q RF 2Y	
30JNG13AA602	Accumulator Sampling Line Isolation Valve	GB	MO	2	A	A	C	ET LT PI	Q RF 2Y	
30JNG23AA602	Accumulator Sampling Line Isolation Valve	GB	MO	2	A	A	C	ET LT PI	Q RF 2Y	
30JNG33AA602	Accumulator Sampling Line Isolation Valve	GB	MO	2	A	A	C	ET LT PI	Q RF 2Y	
30JNG43AA602	Accumulator Sampling Line Isolation Valve	GB	MO	2	A	A	C	ET LT PI	Q RF 2Y	

Table 3.9.6-2—Inservice Valve Testing Program Requirements (Sheet 41 of 103)

Valve Identification Number[1]	Description/ Valve Function	Valve Type[2]	Valve Actuator[3]	ASME Code Class[4]	ASME OM Code Category[5]	Active / Passive[6]	Safety Position[7]	Test Required[8,10]	Test Frequency[9]	Comments
30JNK10AA001	IRWST 3-Way Isolation Valve	GB	MO	2	A	A	O	ET LT PI	Q RF 2Y	
30JNK20AA001	IRWST 3-Way Isolation Valve	GB	MO	2	A	A	O	ET LT PI	Q RF 2Y	
30JNK30AA001	IRWST 3-Way Isolation Valve	GB	MO	2	A	A	O	ET LT PI	Q RF 2Y	
30JNK40AA001	IRWST 3-Way Isolation Valve	GB	MO	2	A	A	O	ET LT PI	Q RF 2Y	
30JNK10AA009	1st CVCS Suction Isolation Valve From IRWST	GB	MO	2	A	A	O	ET LT PI	Q RF 2Y	
30JNK11AA009	1st SAHRS Suction Isolation Valve from IRWST	GB	MO	2	A	A	C	ET LT PI	Q RF 2Y	
30JNK10AA010	SIS-IRWST Miniflow Line Check Valve	CK	SA	2	C	A	O/C	ET	CS	
30JNK11AA010	SIS-IRWST Miniflow Line Check Valve	CK	SA	2	C	A	O/C	ET	CS	

Table 3.9.6-2—Inservice Valve Testing Program Requirements (Sheet 42 of 103)

Valve Identification Number[1]	Description/ Valve Function	Valve Type[2]	Valve Actuator[3]	ASME Code Class[4]	ASME OM Code Category[5]	Active / Passive[6]	Safety Position[7]	Test Required[8,10]	Test Frequency[9]	Comments
30JNK10AA011	SIS-IRWST Miniflow Line Check Valve	CK	SA	2	C	A	O/C	ET	CS	
30JNK11AA011	SIS-IRWST Miniflow Line Check Valve	CK	SA	2	C	A	O/C	ET	CS	
30JNK10AA045	Annulus Region Drain Line Isolation Valve (CVCS Suction Line)	GB	MA	2	A	P	C	LT PI	2Y 2Y	
30JNK11AA045	Annulus Region Drain Line Isolation Valve (SAHRS Suction Line)	GB	MA	2	A	P	C	LT PI	2Y 2Y	
30JNK10AA013	2nd CVCS Suction Isolation Valve From IRWST	GB	MO	2	A	A	C	ET LT PI	Q RF 2Y	
30KAA10AA004	CCW Hx (KAA10 AC001) Outlet Check Valve	CK	SA	3	C	A	O	ET	Q	
30KAA10AA006	Quick Closing Valve for KAA10 to Common1B	BF	HO	3	A	A	O/C	ET ST LT PI	Q Q 2Y 2Y	

Table 3.9.6-2—Inservice Valve Testing Program Requirements (Sheet 43 of 103)

Valve Identification Number[1]	Description/ Valve Function	Valve Type[2]	Valve Actuator[3]	ASME Code Class[4]	ASME OM Code Category[5]	Active / Passive[6]	Safety Position[7]	Test Required[8,10]	Test Frequency[9]	Comments
30KAA10AA010	Quick Closing Valve for Common1B to KAA10	BF	HO	3	A	A	O/C	ET ST LT PI	Q Q 2Y 2Y	
30KAA10AA027	Isolation Valve for Demin Water to CCW TRN10	DI	MO	3	A	A	C	ET ST LT PI	Q Q 2Y 2Y	
30KAA10AA032	Quick Closing Valve for Common1A to KAA10	BF	HO	3	A	A	O/C	ET ST LT PI	Q Q 2Y 2Y	
30KAA10AA033	Quick Closing Valve for KAA10 to Common1A	BF	HO	3	A	A	O/C	ET ST LT PI	Q Q 2Y 2Y	
30KAA10AA112	Bypass Control Valve for KAA10 AC001	BF	MO	3	A	A	O/C	ET ST LT PI	Q Q 2Y 2Y	
30KAA12AA005	CCW Isolation Valve for LHSI HX 1	BF	MO	3	A	A	O	ET ST LT PI	Q Q 2Y 2Y	
30KAA12AA012	Check Valve Downstream LHSI HX 10	CK	SA	3	C	A	O	ET	Q	

Table 3.9.6-2—Inservice Valve Testing Program Requirements (Sheet 44 of 103)

Valve Identification Number[1]	Description/ Valve Function	Valve Type[2]	Valve Actuator[3]	ASME Code Class[4]	ASME OM Code Category[5]	Active / Passive[6]	Safety Position[7]	Test Required[8,10]	Test Frequency[9]	Comments
30KAA20AA004	CCW Hx (KAA20 AC001) Outlet Check Valve	CK	SA	3	C	A	O	ET	Q	
30KAA20AA006	Quick Closing Valve for KAA20 to Common1B	BF	HO	3	A	A	O/C	ET ST LT PI	Q Q 2Y 2Y	
30KAA20AA010	Quick Closing Valve for Common1B to KAA20	BF	HO	3	A	A	O/C	ET ST LT PI	Q Q 2Y 2Y	
30KAA20AA027	Isolation Valve for Demin Water to CCW TRN20	DI	MO	3	A	A	C	ET ST LT PI	Q Q 2Y 2Y	
30KAA20AA032	Quick Closing Valve for Common1A to KAA20	BF	HO	3	A	A	O/C	ET ST LT PI	Q Q 2Y 2Y	
30KAA20AA033	Quick Closing Valve for KAA20 to Common1A	BF	HO	3	A	A	O/C	ET ST LT PI	Q Q 2Y 2Y	
30KAA20AA112	Bypass Control Valve for KAA20 AC001	BF	MO	3	A	A	O/C	ET ST LT PI	Q Q 2Y 2Y	

Table 3.9.6-2—Inservice Valve Testing Program Requirements (Sheet 45 of 103)

Valve Identification Number[1]	Description/ Valve Function	Valve Type[2]	Valve Actuator[3]	ASME Code Class[4]	ASME OM Code Category[5]	Active / Passive[6]	Safety Position[7]	Test Required[8,10]	Test Frequency[9]	Comments
30KAA22AA005	CCW Isolation Valve for LHSI HX 2	BF	MO	3	A	A	O	ET ST LT PI	Q Q 2Y 2Y	
30KAA22AA012	Check Valve Downstream LHSI HX 20	CK	SA	3	C	A	O	ET	Q	
30KAA22AA013	CCW Isolation Valve to LHSI PP20 Seal Cooler	DI	MO	3	A	A	O	ET ST LT PI	Q Q 2Y 2Y	
30KAA22AA014	Check Valve Downstream LHSI PP 20	CK	SA	3	C	A	O	ET	Q	
30KAA22AA101	3 Way Control Valve for QKA20 AC002	GB	MO	3	B	A	O/C	ET PI	Q 2Y	
30KAA30AA004	CCW Hx (KAA30 AC001) Outlet Check Valve	CK	SA	3	C	A	O	ET	Q	
30KAA30AA006	Quick Closing Valve for KAA30 to Common2B	BF	HO	3	A	A	O/C	ET ST LT PI	Q Q 2Y 2Y	

Table 3.9.6-2—Inservice Valve Testing Program Requirements (Sheet 46 of 103)

Valve Identification Number[1]	Description/ Valve Function	Valve Type[2]	Valve Actuator[3]	ASME Code Class[4]	ASME OM Code Category[5]	Active / Passive[6]	Safety Position[7]	Test Required[8,10]	Test Frequency[9]	Comments
30KAA30AA010	Quick Closing Valve for Common2B to KAA30	BF	HO	3	A	A	O/C	ET ST LT PI	Q Q 2Y 2Y	
30KAA30AA027	Isolation Valve for Demin Water to CCW TRN30	DI	MO	3	A	A	C	ET ST LT PI	Q Q 2Y 2Y	
30KAA30AA032	Quick Closing Valve for Common2A to KAA30	BF	HO	3	A	A	O/C	ET ST LT PI	Q Q 2Y 2Y	
30KAA30AA033	Quick Closing Valve for KAA30 to Common2A	BF	HO	3	A	A	O/C	ET ST LT PI	Q Q 2Y 2Y	
30KAA30AA112	Bypass Control Valve for KAA30 AC001	BF	MO	3	A	A	O/C	ET ST LT PI	Q Q 2Y 2Y	
30KAA32AA005	CCW Isolation Valve for LHSI HX 3	BF	MO	3	A	A	O	ET ST LT PI	Q Q 2Y 2Y	
30KAA32AA012	Check Valve Downstream LHSI HX 30	CK	SA	3	C	A	O	ET	Q	

Table 3.9.6-2—Inservice Valve Testing Program Requirements (Sheet 47 of 103)

Valve Identification Number[1]	Description/ Valve Function	Valve Type[2]	Valve Actuator[3]	ASME Code Class[4]	ASME OM Code Category[5]	Active / Passive[6]	Safety Position[7]	Test Required[8,10]	Test Frequency[9]	Comments
30KAA32AA013	CCW Isolation Valve to LHSI PP30 Seal Cooler	DI	MO	3	A	A	O	ET ST LT PI	Q Q 2Y 2Y	
30KAA32AA014	Check Valve Downstream LHSI PP 30	CK	SA	3	C	A	O	ET	Q	
30KAA32AA101	3 Way Control Valve for QKA30 AC002	GB	MO	3	B	A	O/C	ET PI	Q 2Y	
30KAA40AA004	CCW Hx (KAA40 AC001) Outlet Check Valve	CK	SA	3	C	A	O	ET	Q	
30KAA40AA006	Quick Closing Valve for KAA40 to Common2B	BF	HO	3	A	A	O/C	ET ST LT PI	Q Q 2Y 2Y	
30KAA40AA010	Quick Closing Valve for Common2B to KAA40	BF	HO	3	A	A	O/C	ET ST LT PI	Q Q 2Y 2Y	
30KAA40AA027	Isolation Valve for Demin Water to CCW TRN40	DI	MO	3	A	A	C	ET ST LT PI	Q Q 2Y 2Y	

Table 3.9.6-2—Inservice Valve Testing Program Requirements (Sheet 48 of 103)

Valve Identification Number[1]	Description/ Valve Function	Valve Type[2]	Valve Actuator[3]	ASME Code Class[4]	ASME OM Code Category[5]	Active / Passive[6]	Safety Position[7]	Test Required[8,10]	Test Frequency[9]	Comments
30KAA40AA032	Quick Closing Valve for KAA40 to Common2A	BF	HO	3	A	A	O/C	ET ST LT PI	Q Q 2Y 2Y	
30KAA40AA033	Quick Closing Valve for Common2A to KAA40	BF	HO	3	A	A	O/C	ET ST LT PI	Q Q 2Y 2Y	
30KAA40AA112	Bypass Control Valve for KAA40 AC001	BF	MO	3	A	A	O/C	ET ST LT PI	Q Q 2Y 2Y	
30KAA42AA005	CCW Isolation Valve for LHSI HX 4	BF	MO	3	A	A	O	ET ST LT PI	Q Q 2Y 2Y	
30KAA42AA012	Check Valve Downstream LHSI HX 40	CK	SA	3	C	A	O	ET	Q	
30KAA20AA013	Common 1.B Supply Manual Isolation Valve	BF	MA	3	B	A	O/C	ET	5Y	
30KAA20AA014	Common 1.B Return Manual Isolation Valve	BF	MA	3	B	A	O/C	ET	5Y	

Table 3.9.6-2—Inservice Valve Testing Program Requirements (Sheet 49 of 103)

Valve Identification Number[1]	Description/ Valve Function	Valve Type[2]	Valve Actuator[3]	ASME Code Class[4]	ASME OM Code Category[5]	Active / Passive[6]	Safety Position[7]	Test Required[8,10]	Test Frequency[9]	Comments
30KAA30AA013	Common 2.B Supply Manual Isolation Valve	BF	MA	3	B	A	O/C	ET	5Y	
30KAA30AA014	Common 2.B Return Manual Isolation Valve	BF	MA	3	B	A	O/C	ET	5Y	
30KAB10AA192	RV Downstream Common 1B	RV	SA	3	C	A	O/C	ET LT	10Y 10Y	
30KAB80AA015	Supply Isolation Operational Chilled Water Users	BF	HO	3	A	A	C	ET ST LT PI	Q Q 2Y 2Y	
30KAB80AA016	Supply Isolation Operational Chilled Water Users	BF	HO	3	A	A	C	ET ST LT PI	Q Q 2Y 2Y	
30KAB80AA019	Return Isolation Operational Chilled Water Users	BF	HO	3	A	A	C	ET ST LT PI	Q Q 2Y 2Y	
30KAB80AA020	Return Common 1B	CK	SA	3	C	A	C	ET	Q	
30KAB30AA049	RCP Thermal Barrier 1 and 2 Supply Outside CIV	GT	MO	2	A	A	C	ET ST LT PI	Q Q 2Y 2Y	LT per 10 CFR 50, Appendix J

Table 3.9.6-2—Inservice Valve Testing Program Requirements (Sheet 50 of 103)

Valve Identification Number[1]	Description/ Valve Function	Valve Type[2]	Valve Actuator[3]	ASME Code Class[4]	ASME OM Code Category[5]	Active / Passive[6]	Safety Position[7]	Test Required[8,10]	Test Frequency[9]	Comments
30KAB30AA050	Supply Thermal Barrier 1 and 2 Inside CIV	~~CK~~GT	~~SA~~MO	2	A~~/C~~	A	C	ET ST LT PI	~~CS~~Q ~~RF~~Q ~~2Y~~2Y 2Y	LT per 10 CFR 50, Appendix J
30KAB30AA051	RCP Thermal Barrier 1 and 2 Return Inside CIV	GT	MO	2	A	A	C	ET ST LT PI	Q Q 2Y 2Y	LT per 10 CFR 50, Appendix J
30KAB30AA052	RCP Thermal Barrier 1 and 2 Return Outside CIV	GT	MO	2	A	A	C	ET ST LT PI	Q Q 2Y 2Y	LT per 10 CFR 50, Appendix J
30KAB30AA191	RV Downstream Thermal Barrier 1 and 2	RV	SA	3	C	A	O/C	ET LT	10Y 10Y	
30KAB40AA001	Supply KLA / KT Users Outside CIV	GT	MO	2	A	A	C	ET ST LT PI	Q Q 2Y 2Y	LT per 10 CFR 50, Appendix J
30KAB40AA002	Supply Common 1B Inside CIV	CK	SA	2	A/C	A	C	ET LT PI	CS RF 2Y	LT per 10 CFR 50, Appendix J
30KAB40AA006	Return KLA / KT Users Outside CIV	GT	MO	2	A	A	C	ET ST LT PI	Q Q 2Y 2Y	LT per 10 CFR 50, Appendix J

Table 3.9.6-2—Inservice Valve Testing Program Requirements (Sheet 51 of 103)

Valve Identification Number[1]	Description/ Valve Function	Valve Type[2]	Valve Actuator[3]	ASME Code Class[4]	ASME OM Code Category[5]	Active / Passive[6]	Safety Position[7]	Test Required[8,10]	Test Frequency[9]	Comments
30KAB40AA012	Return KLA / KT Users Inside CIV	GT	MO	2	A	A	C	ET ST LT PI	Q Q 2Y 2Y	LT per 10 CFR 50, Appendix J
30KAB40AA194	RV Downstream Cont. HVAC	RV	SA	3	C	A	O/C	ET LT	10Y 10Y	
30KAB60AA013	Supply KBA, RCP 1 and 2 Outside CIV	GT	MO	2	A	A	C	ET ST LT PI	Q Q 2Y 2Y	LT per 10 CFR 50, Appendix J
30KAB60AA014	Supply RCP 1and 2 Inside CIV	CK	SA	2	A/C	A	C	ET LT PI	CS RF 2Y	LT per 10 CFR 50, Appendix J
30KAB60AA018	Return KBA, RCP 1 and 2 Inside CIV	GT	MO	2	A	A	C	ET ST LT PI	Q Q 2Y 2Y	LT per 10 CFR 50, Appendix J
30KAB60AA019	Return KBA, RCP 1 and 2 Outside CIV	GT	MO	2	A	A	C	ET ST LT PI	Q Q 2Y 2Y	LT per 10 CFR 50, Appendix J
30KAB60AA191	RV Return CVCS HP CL1	RV	SA	3	C	A	O/C	ET LT	10Y 10Y	
30KAB10AA193	RV Downstream FPCS HX1	RV	SA	3	C	A	O/C	ET LT	10Y 10Y	
30KAB20AA192	RV Downstream Common 2B	RV	SA	3	C	A	O/C	ET LT	10Y 10Y	

Table 3.9.6-2—Inservice Valve Testing Program Requirements (Sheet 52 of 103)

Valve Identification Number[1]	Description/ Valve Function	Valve Type[2]	Valve Actuator[3]	ASME Code Class[4]	ASME OM Code Category[5]	Active / Passive[6]	Safety Position[7]	Test Required[8,10]	Test Frequency[9]	Comments
30KAB30AA054	Supply Thermal Barrier 3 and 4 Inside CIV	~~CK~~GT	~~SA~~MO	2	A~~/C~~	A	C	ET ST LT PI	~~CS~~Q ~~RF~~Q ~~2Y~~2Y 2Y	LT per 10 CFR 50, Appendix J
30KAB30AA055	RCP Thermal Barrier 3 and 4 Return Inside CIV	GT	MO	2	A	A	C	ET ST LT PI	Q Q 2Y 2Y	LT per 10 CFR 50, Appendix J
30KAB30AA056	RCP Thermal Barrier 3 and 4 Return Outside CIV	GT	MO	2	A	A	C	ET ST LT PI	Q Q 2Y 2Y	LT per 10 CFR 50, Appendix J
30KAB30AA053	RCP Thermal Barrier 3 and 4 supply Outside CIV	GT	MO	2	A	A	C	ET ST LT PI	Q Q 2Y 2Y	LT per 10 CFR 50, Appendix J
30KAB30AA192	RV Downstream TH BARR 3 and 4	RV	SA	3	C	A	O/C	ET LT	10Y 10Y	
30KAB70AA013	Supply KBA, RCP 3 and 4 Outside CIV	GT	MO	2	A	A	C	ET ST LT PI	Q Q 2Y 2Y	LT per 10 CFR 50, Appendix J
30KAB70AA014	Supply RCP 3 and 4 Inside CIV	CK	SA	2	A/C	A	C	ET LT PI	CS RF 2Y	LT per 10 CFR 50, Appendix J

Table 3.9.6-2—Inservice Valve Testing Program Requirements (Sheet 53 of 103)

Valve Identification Number[1]	Description/ Valve Function	Valve Type[2]	Valve Actuator[3]	ASME Code Class[4]	ASME OM Code Category[5]	Active / Passive[6]	Safety Position[7]	Test Required[8,10]	Test Frequency[9]	Comments
30KAB70AA018	Return KBA, RCP 3 and 4 Inside CIV	GT	MO	2	A	A	C	ET ST LT PI	Q Q 2Y 2Y	LT per 10 CFR 50, Appendix J
30KAB70AA019	Return KBA, RCP 3 and 4 Outside CIV	GT	MO	2	A	A	C	ET ST LT PI	Q Q 2Y 2Y	LT per 10 CFR 50, Appendix J
30KAB70AA191	RV Return CVCS HP CL2	RV	SA	3	C	A	O/C	ET LT	10Y 10Y	
30KAB50AA001	Supply Isolation Nuclear Auxiliary and Radwaste Buildings	BF	HO	3	A	A	C	ET ST LT PI	Q Q 2Y 2Y	
30KAB50AA004	Return Isolation Nuclear Auxiliary and Radwaste Buildings	BF	HO	3	A	A	C	ET ST LT PI	Q Q 2Y 2Y	
30KAB50AA006	Supply Isolation Nuclear Auxiliary and Radwaste Buildings	BF	HO	3	A	A	C	ET ST LT PI	Q Q 2Y 2Y	
30KAB50AA008	Return Common 2B	CK	SA	3	C	A	C	ET	Q	
30KAB20AA193	RV Downstream FPCS HX2	RV	SA	3	C	A	O/C	ET LT	10Y 10Y	

Table 3.9.6-2—Inservice Valve Testing Program Requirements (Sheet 54 of 103)

Valve Identification Number[1]	Description/ Valve Function	Valve Type[2]	Valve Actuator[3]	ASME Code Class[4]	ASME OM Code Category[5]	Active / Passive[6]	Safety Position[7]	Test Required[8,10]	Test Frequency[9]	Comments
30KBA10AA001	Reactor Coolant Pressure Boundary Isolation Valve	GB	MO	1	B	A	C	ET PI	Q 2Y	
30KBA10AA002	RC Pressure Boundary Isolation Valve	GB	MO	1	B	A	C	ET PI	Q 2Y	
30KBA14AA012	Letdown Line Check Valve	CK	SA	3	C	A	C	ET	Q	
30KBA14AA191	Letdown Line Relief Valve	RV	SA	3	C	A	C	ET LT	10Y 10Y	
30KBA14AA002	CVCS Letdown Inside CIV	GB	MO	2	A	A	C	ET ST LT PI	Q Q 2Y 2Y	LT per 10 CFR 50, Appendix J
30KBA14AA003	CVCS Letdown Outside CIV	GB	MO	2	A	A	C	ET ST LT PI	Q Q 2Y 2Y	LT per 10 CFR 50, Appendix J
30KBA21AA001	Boron Dilution Valve	GB	MO	3	B	A	C	ET PI	Q 2Y	
30KBA21AA009	Boron Dilution Valve	GB	MO	3	B	A	C	ET PI	Q 2Y	
30KBA25AA017	Boron Dilution Valve	GB	MO	3	B	A	C	ET PI	Q 2Y	

Table 3.9.6-2—Inservice Valve Testing Program Requirements (Sheet 55 of 103)

Valve Identification Number[1]	Description/ Valve Function	Valve Type[2]	Valve Actuator[3]	ASME Code Class[4]	ASME OM Code Category[5]	Active / Passive[6]	Safety Position[7]	Test Required[8,10]	Test Frequency[9]	Comments
30KBA34AA002	CVCS Charging Outside CIV	GB	MO	2	A	A	C	ET ST LT PI	Q Q 2Y 2Y	LT per 10 CFR 50, Appendix J
30KBA34AA003	CVCS Charging Inside CIV	CK	SA	2	A/C	A	C	ET LT PI	CS RF 2Y	LT per 10 CFR 50, Appendix J
30KBA34AA191	Charging Line Relief Valve	RV	SA	3	C	A	O	ET LT	10Y 10Y	
30KBA35AA001	Pressurizer Auxiliary Spray Isolation Valve	GB	MO	3	B	A	C	ET PI	Q 2Y	
30KBA35AA002	Pressurizer Auxiliary Spray Check Valve	CK	SA	1	A/C	A	C	ET LT PI	Q 2Y 2Y	
30KBA34AA012	Charging Line Isolation Valve	GB	MO	3	B	A	C	ET PI	Q 2Y	
30KBA34AA018	RC Pressure Boundary Check Valve	CK	SA	1	C	A	C	ET	Q	
30KBA34AA019	RC Pressure Boundary Check Valve	CK	SA	1	C	A	C	ET	Q	
30KBA34AA020	RC Pressure Boundary Check Valve	CK	SA	1	C	A	C	ET	Q	

Table 3.9.6-2—Inservice Valve Testing Program Requirements (Sheet 56 of 103)

Valve Identification Number[1]	Description/ Valve Function	Valve Type[2]	Valve Actuator[3]	ASME Code Class[4]	ASME OM Code Category[5]	Active / Passive[6]	Safety Position[7]	Test Required[8,10]	Test Frequency[9]	Comments
30KBA34AA021	RC Pressure Boundary Check Valve	CK	SA	1	C	A	C	ET	Q	
30KLA10AA001	Small Flow Supply - Outside CIV	BF	AO	2	A	A	C	ET ST LT PI	Q Q 2Y 2Y	LT per 10 CFR 50, Appendix J
30KLA10AA003	Small Flow Supply - Inside CIV	GT	AO	2	A	A	C	ET ST LT PI	Q Q 2Y 2Y	LT per 10 CFR 50, Appendix J
30KLA30AA002	Large Flow Supply - Outside CIV	BF	AO	2	A	A	C	ET ST LT PI	Q Q 2Y 2Y	LT per 10 CFR 50, Appendix J
30KLA30AA003	Large Flow Supply - Inside CIV	BF	AO	2	A	A	C	ET ST LT PI	Q Q 2Y 2Y	LT per 10 CFR 50, Appendix J
30KLA20AA001	Small Flow Return - Inside CIV	GT	AO	2	A	A	C	ET ST LT PI	Q Q 2Y 2Y	LT per 10 CFR 50, Appendix J
30KLA20AA003	Small Flow Return - Outside CIV	BF	AO	2	A	A	C	ET ST LT PI	Q Q 2Y 2Y	LT per 10 CFR 50, Appendix J

Table 3.9.6-2—Inservice Valve Testing Program Requirements (Sheet 57 of 103)

Valve Identification Number[1]	Description/ Valve Function	Valve Type[2]	Valve Actuator[3]	ASME Code Class[4]	ASME OM Code Category[5]	Active / Passive[6]	Safety Position[7]	Test Required[8,10]	Test Frequency[9]	Comments
30KLA40AA001	Large Flow Return - Inside CIV	BF	AO	2	A	A	C	ET ST LT PI	Q Q 2Y 2Y	LT per 10 CFR 50, Appendix J
30KLA40AA002	Large Flow Return - Outside CIV	BF	AO	2	A	A	C	ET ST LT PI	Q Q 2Y 2Y	LT per 10 CFR 50, Appendix J
30KTA10AA017	Nuclear Island Vents and Drains Inside CIV	GB	MO	2	A	A	C	ET ST LT PI	Q Q 2Y 2Y	LT per 10 CFR 50, Appendix J
30KTA10AA018	Nuclear Island Vents and Drains Outside CIV	GB	MO	2	A	A	C	ET ST LT PI	Q Q 2Y 2Y	LT per 10 CFR 50, Appendix J
30KTC10AA005	Floor Drain 1 RB Inside CIV	GB	MO	2	A	A	C	ET ST LT PI	Q Q 2Y 2Y	
30KTC10AA006	Floor Drain 1 RB Outside CIV	GB	MO	2	A	A	C	ET ST LT PI	Q Q 2Y 2Y	

Table 3.9.6-2—Inservice Valve Testing Program Requirements (Sheet 58 of 103)

Valve Identification Number[1]	Description/ Valve Function	Valve Type[2]	Valve Actuator[3]	ASME Code Class[4]	ASME OM Code Category[5]	Active / Passive[6]	Safety Position[7]	Test Required[8,10]	Test Frequency[9]	Comments
30KTC10AA010	Chemical Reinjection Outside CIV	GB	MO	2	A	A	C	ET ST LT PI	Q Q 2Y 2Y	
30KTC10AA029	Chemical Reinjection Inside CIV	CK	SA	2	A/C	A	C	ET LT PI	Q 2Y 2Y	
30KTD10AA015	Floor Drain 2 RB Outside CIV	GB	MO	2	A	A	C	ET ST LT PI	Q Q 2Y 2Y	
30KTD10AA024	Floor Drain 2 RB Inside CIV	GB	MO	2	A	A	C	ET ST LT PI	Q Q 2Y 2Y	
30KTD10AA025	Annulus Drain Outside CIV	GB	MO	2	A	A	C	ET ST LT PI	Q Q 2Y 2Y	
30KTD10AA008	Annulus Drain Inside CIV	CK	SA	2	A/C	A	C	ET LT PI	Q 2Y 2Y	
30KUA10AA002	RCS Hot Leg 1 Sample Isolation	GT	MO	1	A	A	C	ET ST LT PI	Q Q 2Y 2Y	

Table 3.9.6-2—Inservice Valve Testing Program Requirements (Sheet 59 of 103)

Valve Identification Number[1]	Description/ Valve Function	Valve Type[2]	Valve Actuator[3]	ASME Code Class[4]	ASME OM Code Category[5]	Active / Passive[6]	Safety Position[7]	Test Required[8,10]	Test Frequency[9]	Comments
30KUA10AA003	RCS Hot Leg 1 Sample Inside CIV	GT	MO	1	A	A	C	ET ST LT PI	Q Q 2Y 2Y	LT per 10 CFR 50, Appendix J
30KUA10AA004	RCS Hot Leg 1 Sample Outside CIV	GT	MO	2	A	A	C	ET ST LT PI	Q Q 2Y 2Y	LT per 10 CFR 50, Appendix J
30KUA20AA001	Pressurizer Sample Isolation	GT	MO	1	A	A	C	ET ST LT PI	Q Q 2Y 2Y	
30KUA20AA002	Pressurizer Sample Inside CIV	GT	MO	1	A	A	C	ET ST LT PI	Q Q 2Y 2Y	LT per 10 CFR 50, Appendix J
30KUA20AA003	Pressurizer Sample Outside CIV	GT	MO	2	A	A	C	ET ST LT PI	Q Q 2Y 2Y	LT per 10 CFR 50, Appendix J
30KUA30AA002	RCS Crossover Leg 3 Sample Isolation	GT	MO	1	A	A	C	ET ST LT PI	Q Q 2Y 2Y	

Table 3.9.6-2—Inservice Valve Testing Program Requirements (Sheet 60 of 103)

Valve Identification Number[1]	Description/ Valve Function	Valve Type[2]	Valve Actuator[3]	ASME Code Class[4]	ASME OM Code Category[5]	Active / Passive[6]	Safety Position[7]	Test Required[8,10]	Test Frequency[9]	Comments
30KUA30AA003	RCS Crossover Leg 3 Sample Inside CIV	GT	MO	1	A	A	C	ET ST LT PI	Q Q 2Y 2Y	LT per 10 CFR 50, Appendix J
30KUA30AA004	RCS Crossover Leg 3 Sample Outside CIV	GT	MO	2	A	A	C	ET ST LT PI	Q Q 2Y 2Y	LT per 10 CFR 50, Appendix J
30KUB10AA001	Accumulator Sample Inside CIV	GT	MO	2	A	A	C	ET ST LT PI	Q Q 2Y 2Y	LT per 10 CFR 50, Appendix J
30KUB10AA002	Accumulator Sample Outside CIV	GT	MO	2	A	A	C	ET ST LT PI	Q Q 2Y 2Y	LT per 10 CFR 50, Appendix J
30KUL51AA002	Severe Accident Sampling Outside CIV	GT	MO	2	A	A	C	ET ST LT PI	Q Q 2Y 2Y	LT per 10 CFR 50, Appendix J
30KUL51AA003	Severe Accident Sampling Outside CIV	GT	MO	2	A	A	C	ET ST LT PI	Q Q 2Y 2Y	LT per 10 CFR 50, Appendix J

Table 3.9.6-2—Inservice Valve Testing Program Requirements (Sheet 61 of 103)

Valve Identification Number[1]	Description/ Valve Function	Valve Type[2]	Valve Actuator[3]	ASME Code Class[4]	ASME OM Code Category[5]	Active / Passive[6]	Safety Position[7]	Test Required[8,10]	Test Frequency[9]	Comments
30KUL52AA002	Severe Accident Sampling Outside CIV	GT	MO	2	A	A	C	ET ST LT PI	Q Q 2Y 2Y	LT per 10 CFR 50, Appendix J
30KUL52AA003	Severe Accident Sampling Outside CIV	GT	MO	2	A	A	C	ET ST LT PI	Q Q 2Y 2Y	LT per 10 CFR 50, Appendix J
30LAB60AA003	MFW Inside CIV	CK	SA	2	A/C	A	C	ET LT PI	CS RF 2Y	LT per 10 CFR 50, Appendix J
30LAB70AA003	MFW Inside CIV	CK	SA	2	A/C	A	C	ET LT PI	CS RF 2Y	LT per 10 CFR 50, Appendix J
30LAB80AA003	MFW Inside CIV	CK	SA	2	A/C	A	C	ET LT PI	CS RF 2Y	LT per 10 CFR 50, Appendix J
30LAB90AA003	MFW Inside CIV	CK	SA	2	A/C	A	C	ET LT PI	CS RF 2Y	LT per 10 CFR 50, Appendix J
30LAB60AA002	MFW Outside CIV	GT	MO	2	A	A	C	ET ST LT PI	Q Q 2Y 2Y	LT per 10 CFR 50, Appendix J

Table 3.9.6-2—Inservice Valve Testing Program Requirements (Sheet 62 of 103)

Valve Identification Number[1]	Description/ Valve Function	Valve Type[2]	Valve Actuator[3]	ASME Code Class[4]	ASME OM Code Category[5]	Active / Passive[6]	Safety Position[7]	Test Required[8,10]	Test Frequency[9]	Comments
30LAB70AA002	MFW Outside CIV	GT	MO	2	A	A	C	ET ST LT PI	Q Q 2Y 2Y	LT per 10 CFR 50, Appendix J
30LAB80AA002	MFW Outside CIV	GT	MO	2	A	A	C	ET ST LT PI	Q Q 2Y 2Y	LT per 10 CFR 50, Appendix J
30LAB90AA002	MFW Outside CIV	GT	MO	2	A	A	C	ET ST LT PI	Q Q 2Y 2Y	LT per 10 CFR 50, Appendix J
30LAB60AA001	MFW Full Load Isolation	GT	HO / PA / SA	3	A	A	C	ET ST LT PI	Q Q 2Y 2Y	
30LAB70AA001	MFW Full Load Isolation	GT	HO / PA / SA	3	A	A	C	ET ST LT PI	Q Q 2Y 2Y	
30LAB80AA001	MFW Full Load Isolation	GT	HO / PA / SA	3	A	A	C	ET ST LT PI	Q Q 2Y 2Y	

Table 3.9.6-2—Inservice Valve Testing Program Requirements (Sheet 63 of 103)

Valve Identification Number[1]	Description/ Valve Function	Valve Type[2]	Valve Actuator[3]	ASME Code Class[4]	ASME OM Code Category[5]	Active / Passive[6]	Safety Position[7]	Test Required[8,10]	Test Frequency[9]	Comments
30LAB90AA001	MFW Full Load Isolation	GT	HO / PA / SA	3	A	A	C	ET ST LT PI	Q Q 2Y 2Y	
30LAB64AA001	MFW Low Load Isolation	GT	MO	3	A	A	C	ET ST LT PI	Q Q 2Y 2Y	
30LAB74AA001	MFW Low Load Isolation	GT	MO	3	A	A	C	ET ST LT PI	Q Q 2Y 2Y	
30LAB84AA001	MFW Low Load Isolation	GT	MO	3	A	A	C	ET ST LT PI	Q Q 2Y 2Y	
30LAB94AA001	MFW Low Load Isolation	GT	MO	3	A	A	C	ET ST LT PI	Q Q 2Y 2Y	
30LAB60AA101	MFW Full Load Control Valve	GB	MO	3	A	A	C	ET ST LT PI	Q Q 2Y 2Y	

Table 3.9.6-2—Inservice Valve Testing Program Requirements (Sheet 64 of 103)

Valve Identification Number[1]	Description/ Valve Function	Valve Type[2]	Valve Actuator[3]	ASME Code Class[4]	ASME OM Code Category[5]	Active / Passive[6]	Safety Position[7]	Test Required[8,10]	Test Frequency[9]	Comments
30LAB70AA101	MFW Full Load Control Valve	GB	MO	3	A	A	C	ET ST LT PI	Q Q 2Y 2Y	
30LAB80AA101	MFW Full Load Control Valve	GB	MO	3	A	A	C	ET ST LT PI	Q Q 2Y 2Y	
30LAB90AA101	MFW Full Load Control Valve	GB	MO	3	A	A	C	ET ST LT PI	Q Q 2Y 2Y	
30LAB64AA101	MFW Low Load Control Valve	GB	MO	3	A	A	C	ET ST LT PI	Q Q 2Y 2Y	
30LAB74AA101	MFW Low Load Control Valve	GB	MO	3	A	A	C	ET ST LT PI	Q Q 2Y 2Y	
30LAB84AA101	MFW Low Load Control Valve	GB	MO	3	A	A	C	ET ST LT PI	Q Q 2Y 2Y	

Table 3.9.6-2—Inservice Valve Testing Program Requirements (Sheet 65 of 103)

Valve Identification Number[1]	Description/ Valve Function	Valve Type[2]	Valve Actuator[3]	ASME Code Class[4]	ASME OM Code Category[5]	Active / Passive[6]	Safety Position[7]	Test Required[8,10]	Test Frequency[9]	Comments
30LAB94AA101	MFW Low Load Control Valve	GB	MO	3	A	A	C	ET ST LT PI	Q Q 2Y 2Y	
30LAB64AA102	MFW Very Low Load Control Valve	GB	MO	3	A	A	C	ET ST LT PI	Q Q 2Y 2Y	
30LAB74AA102	MFW Very Low Load Control Valve	GB	MO	3	A	A	C	ET ST LT PI	Q Q 2Y 2Y	
30LAB84AA102	MFW Very Low Load Control Valve	GB	MO	3	A	A	C	ET ST LT PI	Q Q 2Y 2Y	
30LAB94AA102	MFW Very Low Load Control Valve	GB	MO	3	A	A	C	ET ST LT PI	Q Q 2Y 2Y	
30LAR11AA001	EFW Train 1 Pump Suction Isolation	DI	MA	3	B	P	O	PI	2Y	
30LAR11AA002	EFW Train 1 Pump Min-Flow Check Valve	CK	SA	3	C	A	O/C	ET	CS	

Table 3.9.6-2—Inservice Valve Testing Program Requirements (Sheet 66 of 103)

Valve Identification Number[1]	Description/ Valve Function	Valve Type[2]	Valve Actuator[3]	ASME Code Class[4]	ASME OM Code Category[5]	Active / Passive[6]	Safety Position[7]	Test Required[8,10]	Test Frequency[9]	Comments
30LAR11AA103	EFW Train 1 Flow Control Valve	GB	MO	3	B	A	O/C	ET PI	Q 2Y	
30LAR11AA004	EFW Train 1 Pump Discharge Isolation	GT	MA	3	B	P	O	PI	2Y	
30LAR11AA105	EFW Train 1 Level Control Valve	GB	MO	3	A	A	O/C	ET ST LT PI	Q Q 2Y 2Y	
30LAR11AA006	EFW Train 1 Outside CIV	GT	MO	2	A	A	O/C	ET ST LT PI	Q Q 2Y 2Y	LT per 10 CFR 50, Appendix J
30LAR11AA007	EFW Train 1 Inside CIV	CK	SA	2	A/C	A	O/C	ET LT PI	CS RF 2Y	LT per 10 CFR 50, Appendix J
30LAR13AA001	EFW Train 1 Supply Header Isolation	GT	MA	3	A	A	O/C	ET LT PI	5Y 2Y 2Y	
30LAR14AA001	EFW Train 1 Discharge Header Isolation	GB	MO	3	A	A	O/C	ET ST LT PI	Q Q 2Y 2Y	
30LAR21AA001	EFW Train 2 Pump Suction Isolation	DI	MA	3	B	P	O	PI	2Y	

Table 3.9.6-2—Inservice Valve Testing Program Requirements (Sheet 67 of 103)

Valve Identification Number[1]	Description/ Valve Function	Valve Type[2]	Valve Actuator[3]	ASME Code Class[4]	ASME OM Code Category[5]	Active / Passive[6]	Safety Position[7]	Test Required[8,10]	Test Frequency[9]	Comments
30LAR21AA002	EFW Train 2 Pump Min-Flow Check Valve	CK	SA	3	C	A	O/C	ET	CS	
30LAR21AA103	EFW Train 2 Flow Control Valve	GB	MO	3	B	A	O/C	ET PI	Q 2Y	
30LAR21AA004	EFW Train 2 Pump Discharge Isolation	GT	MA	3	B	P	O	PI	2Y	
30LAR21AA105	EFW Train 2 Level Control Valve	GB	MO	3	A	A	O/C	ET ST LT PI	Q Q 2Y 2Y	
30LAR21AA006	EFW Train 2 Outside CIV	GT	MO	2	A	A	O/C	ET ST LT PI	Q Q 2Y 2Y	LT per 10 CFR 50, Appendix J
30LAR21AA007	EFW Train 2 Inside CIV	CK	SA	2	A/C	A	O/C	ET LT PI	CS RF 2Y	LT per 10 CFR 50, Appendix J
30LAR23AA001	EFW Train 2 Supply Header Isolation	GT	MA	3	A	A	O/C	ET LT PI	5Y 2Y 2Y	
30LAR24AA001	EFW Train 2 Discharge Header Isolation	GB	MO	3	A	A	O/C	ET ST LT PI	Q Q 2Y 2Y	

Table 3.9.6-2—Inservice Valve Testing Program Requirements (Sheet 68 of 103)

Valve Identification Number[1]	Description/ Valve Function	Valve Type[2]	Valve Actuator[3]	ASME Code Class[4]	ASME OM Code Category[5]	Active / Passive[6]	Safety Position[7]	Test Required[8,10]	Test Frequency[9]	Comments
30LAR31AA001	EFW Train 3 Pump Suction Isolation	DI	MA	3	B	P	O	PI	2Y	
30LAR31AA002	EFW Train 3 Pump Min-Flow Check Valve	CK	SA	3	C	A	O/C	ET	CS	
30LAR31AA103	EFW Train 3 Flow Control Valve	GB	MO	3	B	A	O/C	ET PI	Q 2Y	
30LAR31AA004	EFW Train 3 Pump Discharge Isolation	GT	MA	3	B	P	O	PI	2Y	
30LAR31AA105	EFW Train 3 Level Control Valve	GB	MO	3	A	A	O/C	ET ST LT PI	Q Q 2Y 2Y	
30LAR31AA006	EFW Train 3 Outside CIV	GT	MO	2	A	A	O/C	ET ST LT PI	Q Q 2Y 2Y	LT per 10 CFR 50, Appendix J
30LAR31AA007	EFW Train 3 Inside CIV	CK	SA	2	A/C	A	O/C	ET LT PI	CS RF 2Y	LT per 10 CFR 50, Appendix J
30LAR33AA001	EFW Train 3 Supply Header Isolation	GT	MA	3	A	A	O/C	ET LT PI	5Y 2Y 2Y	

Table 3.9.6-2—Inservice Valve Testing Program Requirements (Sheet 69 of 103)

Valve Identification Number[1]	Description/ Valve Function	Valve Type[2]	Valve Actuator[3]	ASME Code Class[4]	ASME OM Code Category[5]	Active / Passive[6]	Safety Position[7]	Test Required[8,10]	Test Frequency[9]	Comments
30LAR34AA001	EFW Train 3 Discharge Header Isolation	GB	MO	3	A	A	O/C	ET ST LT PI	Q Q 2Y 2Y	
30LAR41AA001	EFW Train 4 Pump Suction Isolation	DI	MA	3	B	P	O	PI	2Y	
30LAR41AA002	EFW Train 4 Pump Min-Flow Check Valve	CK	SA	3	C	A	O/C	ET	CS	
30LAR41AA103	EFW Train 4 Flow Control Valve	GB	MO	3	B	A	O/C	ET PI	Q 2Y	
30LAR41AA004	EFW Train 4 Pump Discharge Isolation	GT	MA	3	B	P	O	PI	2Y	
30LAR41AA105	EFW Train 4 Level Control Valve	GB	MO	3	A	A	O/C	ET ST LT PI	Q Q 2Y 2Y	
30LAR41AA006	EFW Train 4 Outside CIV	GT	MO	2	A	A	O/C	ET ST LT PI	Q Q 2Y 2Y	LT per 10 CFR 50, Appendix J
30LAR41AA007	EFW Train 4 Inside CIV	CK	SA	2	A/C	A	O/C	ET LT PI	CS RF 2Y	LT per 10 CFR 50, Appendix J

Table 3.9.6-2—Inservice Valve Testing Program Requirements (Sheet 70 of 103)

Valve Identification Number[1]	Description/ Valve Function	Valve Type[2]	Valve Actuator[3]	ASME Code Class[4]	ASME OM Code Category[5]	Active / Passive[6]	Safety Position[7]	Test Required[8,10]	Test Frequency[9]	Comments
30LAR43AA001	EFW Train 4 Supply Header Isolation	GT	MA	3	A	A	O/C	ET LT PI	5Y 2Y 2Y	
30LAR44AA001	EFW Train 4 Discharge Header Isolation	GB	MO	3	A	A	O/C	ET ST LT PI	Q Q 2Y 2Y	
30LAR41AA001	Emergency Feedwater Pump, 30LAS41AP001 suction	DI	MA	3	B	P	O	PI	2Y	
30LAR40AA001	DWDS Isolation Valve	GB	MO	3	B	A	C	ET	Q	
30LAR41AA001	DWDS Isolation Valve	CK	SA	3	C	A	C	ET	CS	
30LBA10AA002	Main Steam Isolation Valve	GT	HO / PA / SA	2	A	A	C	ET ST LT PI	Q Q 2Y 2Y	
30LBA20AA002	Main Steam Isolation Valve	GT	HO / PA / SA	2	A	A	C	ET ST LT PI	Q Q 2Y 2Y	
30LBA30AA002	Main Steam Isolation Valve	GT	HO / PA / SA	2	A	A	C	ET ST LT PI	Q Q 2Y 2Y	

Table 3.9.6-2—Inservice Valve Testing Program Requirements (Sheet 71 of 103)

Valve Identification Number[1]	Description/ Valve Function	Valve Type[2]	Valve Actuator[3]	ASME Code Class[4]	ASME OM Code Category[5]	Active / Passive[6]	Safety Position[7]	Test Required[8,10]	Test Frequency[9]	Comments
30LBA40AA002	Main Steam Isolation Valve	GT	HO / PA / SA	2	A	A	C	ET ST LT PI	Q Q 2Y 2Y	
30LBA14AA001	Warmup Line Isolation Valve	GB	MO	2	A	A	C	ET ST LT PI	Q Q 2Y 2Y	
30LBA24AA001	Warmup Line Isolation Valve	GB	MO	2	A	A	C	ET ST LT PI	Q Q 2Y 2Y	
30LBA34AA001	Warmup Line Isolation Valve	GB	MO	2	A	A	C	ET ST LT PI	Q Q 2Y 2Y	
30LBA44AA001	Warmup Line Isolation Valve	GB	MO	2	A	A	C	ET ST LT PI	Q Q 2Y 2Y	
30LBA10AA441	Warmup Drain Line Isolation Valve	GB	MO	2	A	P	C	ET LT PI	Q 2Y 2Y	
30LBA20AA441	Warmup Drain Line Isolation Valve	GB	MO	2	A	P	C	ET LT PI	Q 2Y 2Y	

Table 3.9.6-2—Inservice Valve Testing Program Requirements (Sheet 72 of 103)

Valve Identification Number[1]	Description/ Valve Function	Valve Type[2]	Valve Actuator[3]	ASME Code Class[4]	ASME OM Code Category[5]	Active / Passive[6]	Safety Position[7]	Test Required[8,10]	Test Frequency[9]	Comments
30LBA30AA441	Warmup Drain Line Isolation Valve	GB	MO	2	A	P	C	ET LT PI	Q 2Y 2Y	
30LBA40AA441	Warmup Drain Line Isolation Valve	GB	MO	2	A	P	C	ET LT PI	Q 2Y 2Y	
30LBA10AA444	Warmup Drain Line Isolation Valve	GB	MO	3	B	P	C	PI	2Y	
30LBA10AA444	Warmup Drain Line Isolation Valve	GB	MO	3	B	P	C	PI	2Y	
30LBA10AA444	Warmup Drain Line Isolation Valve	GB	MO	3	B	P	C	PI	2Y	
30LBA10AA444	Warmup Drain Line Isolation Valve	GB	MO	3	B	P	C	PI	2Y	
30LBA14AA101	Warmup Control Valve	GB	MO	3	B	A	C	ET ST LT PI	Q Q 2Y 2Y	
30LBA24AA101	Warmup Control Valve	GB	MO	3	B	A	C	ET ST LT PI	Q Q 2Y 2Y	

Table 3.9.6-2—Inservice Valve Testing Program Requirements (Sheet 73 of 103)

Valve Identification Number[1]	Description/ Valve Function	Valve Type[2]	Valve Actuator[3]	ASME Code Class[4]	ASME OM Code Category[5]	Active / Passive[6]	Safety Position[7]	Test Required[8,10]	Test Frequency[9]	Comments
30LBA34AA101	Warmup Control Valve	GB	MO	3	B	A	C	ET ST LT PI	Q Q 2Y 2Y	
30LBA44AA101	Warmup Control Valve	GB	MO	3	B	A	C	ET ST LT PI	Q Q 2Y 2Y	
30LBA10AA442	Warmup Drain Line Isolation Valve	GB	MO	3	B	P	C	PI	2Y	
30LBA20AA442	Warmup Drain Line Isolation Valve	GB	MO	3	B	P	C	PI	2Y	
30LBA30AA442	Warmup Drain Line Isolation Valve	GB	MO	3	B	P	C	PI	2Y	
30LBA40AA442	Warmup Drain Line Isolation Valve	GB	MO	3	B	P	C	PI	2Y	
30LBA13AA001	Main Steam Relief Isolation Valve	GB	PA/SO	2	A	A	O/C	ET ST LT PI	Q Q 2Y 2Y	

Table 3.9.6-2—Inservice Valve Testing Program Requirements (Sheet 74 of 103)

Valve Identification Number[1]	Description/ Valve Function	Valve Type[2]	Valve Actuator[3]	ASME Code Class[4]	ASME OM Code Category[5]	Active / Passive[6]	Safety Position[7]	Test Required[8,10]	Test Frequency[9]	Comments
30LBA23AA001	Main Steam Relief Isolation Valve	GB	PA/SO	2	A	A	O/C	ET ST LT PI	Q Q 2Y 2Y	
30LBA33AA001	Main Steam Relief Isolation Valve	GB	PA/SO	2	A	A	O/C	ET ST LT PI	Q Q 2Y 2Y	
30LBA43AA001	Main Steam Relief Isolation Valve	GB	PA/SO	2	A	A	O/C	ET ST LT PI	Q Q 2Y 2Y	
30LBA13AA101	Main Steam Relief Control Valve	GB	MO	2	A	A	O/C	ET ST LT PI	Q Q 2Y 2Y	
30LBA23AA101	Main Steam Relief Control Valve	GB	MO	2	A	A	O/C	ET ST LT PI	Q Q 2Y 2Y	
30LBA33AA101	Main Steam Relief Control Valve	GB	MO	2	A	A	O/C	ET ST LT PI	Q Q 2Y 2Y	

Table 3.9.6-2—Inservice Valve Testing Program Requirements (Sheet 75 of 103)

Valve Identification Number[1]	Description/ Valve Function	Valve Type[2]	Valve Actuator[3]	ASME Code Class[4]	ASME OM Code Category[5]	Active / Passive[6]	Safety Position[7]	Test Required[8,10]	Test Frequency[9]	Comments
30LBA43AA101	Main Steam Relief Control Valve	GB	MO	2	A	A	O/C	ET ST LT PI	Q Q 2Y 2Y	
30LBA11AA191	Main Steam Safety Valve	RV	SA	2	A/C	A	O/C	ET LT	5Y 5Y	
30LBA21AA191	Main Steam Safety Valve	RV	SA	2	A/C	A	O/C	ET LT	5Y 5Y	
30LBA31AA191	Main Steam Safety Valve	RV	SA	2	A/C	A	O/C	ET LT	5Y 5Y	
30LBA41AA191	Main Steam Safety Valve	RV	SA	2	A/C	A	O/C	ET LT	5Y 5Y	
30LBA12AA191	Main Steam Safety Valve	RV	SA	2	A/C	A	O/C	ET LT	5Y 5Y	
30LBA22AA191	Main Steam Safety Valve	RV	SA	2	A/C	A	O/C	ET LT	5Y 5Y	
30LBA32AA191	Main Steam Safety Valve	RV	SA	2	A/C	A	O/C	ET LT	5Y 5Y	
30LBA42AA191	Main Steam Safety Valve	RV	SA	2	A/C	A	O/C	ET LT	5Y 5Y	
30PEB10AA002	Recirc Isolation PEB10 AP001	BF	MO	3	B	A	C	ET PI	Q 2Y	
30PEB10AA003	Emergency Blowdown Isolation PEB10	BF	MO	3	A	A	C	ET PI LT	Q 2Y 2Y	

Table 3.9.6-2—Inservice Valve Testing Program Requirements (Sheet 76 of 103)

Valve Identification Number[1]	Description/ Valve Function	Valve Type[2]	Valve Actuator[3]	ASME Code Class[4]	ASME OM Code Category[5]	Active / Passive[6]	Safety Position[7]	Test Required[8,10]	Test Frequency[9]	Comments
30PEB10AA005	Pump Discharge Isolation PEB10 AP001	BF	MO	3	~~B~~A	A	O	ET PI LT	Q 2Y 2Y	
30PEB10AA004	Filter Emergency Blowdown Isolation Valve	GT	MO	3	A	A	C	ET PI LT	Q 2Y 2Y	
30PEB20AA004	Filter Emergency Blowdown Isolation Valve	GT	MO	3	A	A	C	ET PI LT	Q 2Y 2Y	
30PEB30AA004	Filter Emergency Blowdown Isolation Valve	GT	MO	3	A	A	C	ET PI LT	Q 2Y 2Y	
30PEB40AA004	Filter Emergency Blowdown Isolation Valve	GT	MO	3	A	A	C	ET PI LT	Q 2Y 2Y	
30PEB10AA007	Isolation Upstream KAA10 AC001	BF	MA	3	B	A	O	ET PI	5Y 2Y	
30PEB10AA009	Isolation Downstream KAA10 AC001	BF	MA	3	B	A	O	ET PI	5Y 2Y	
30PEB10AA015	Filter Blowdown Isolation PEB10 AP001	GT	MO	3	A	A	C	ET PI LT	Q 2Y 2Y	
30PEB10AA016	Blowdown Isolation PEB10	GB	MO	3	A	A	C	ET PI LT	Q 2Y 2Y	

Table 3.9.6-2—Inservice Valve Testing Program Requirements (Sheet 77 of 103)

Valve Identification Number[1]	Description/ Valve Function	Valve Type[2]	Valve Actuator[3]	ASME Code Class[4]	ASME OM Code Category[5]	Active / Passive[6]	Safety Position[7]	Test Required[8,10]	Test Frequency[9]	Comments
30PEB10AA027	Isolation Upstream KAA10 AC001	BF	MA	3	B	A	O	ET PI	5Y 2Y	
30PEB10AA029	Isolation Downstream KAA10 AC001	BF	MA	3	B	A	O	ET PI	5Y 2Y	
30PEB20AA027	Isolation Upstream KAA20 AC001	BF	MA	3	B	A	O	ET PI	5Y 2Y	
30PEB20AA029	Isolation Downstream KAA20 AC001	BF	MA	3	B	A	O	ET PI	5Y 2Y	
30PEB30AA027	Isolation Upstream KAA30 AC001	BF	MA	3	B	A	O	ET PI	5Y 2Y	
30PEB30AA029	Isolation Downstream KAA30 AC001	BF	MA	3	B	A	O	ET PI	5Y 2Y	
30PEB40AA027	Isolation Upstream KAA40 AC001	BF	MA	3	B	A	O	ET PI	5Y 2Y	
30PEB40AA029	Isolation Downstream KAA40 AC001	BF	MA	3	B	A	O	ET PI	5Y 2Y	
30PEB10AA190	Air Release from Filter 30PEB10AT002	RV	SA	3	C	A	O/C	ET LT PI	10Y 10Y 2Y	

Table 3.9.6-2—Inservice Valve Testing Program Requirements (Sheet 78 of 103)

Valve Identification Number[1]	Description/ Valve Function	Valve Type[2]	Valve Actuator[3]	ASME Code Class[4]	ASME OM Code Category[5]	Active / Passive[6]	Safety Position[7]	Test Required[8,10]	Test Frequency[9]	Comments
30PEB11AA191	Vacuum Breaker Downstream SAQ10 AC001	RV	SA	3	C	A	O/C	ET LT PI	2Y 10Y 2Y	
30PEB10AA192	Thermal Relief Downstream KAA10 AC001	RV	SA	3	C	A	O/C	ET LT PI	10Y 10Y 2Y	
30PEB10AA204	Pump Discharge Check PEB10 AP001	CK	SA	3	A/C	A	O	ET LT	Q 2Y	
30PEB11AA001	Isolation Upstream SAQ10 AC001	GB	MA	3	B	A	O	ET PI	5Y 2Y	
30PEB11AA002	Isolation Downstream SAQ10 AC001	GB	MA	3	B	A	O	ET PI	5Y 2Y	
30PEB21AA001	Isolation Upstream XJG10 AC002	BF	MA	3	B	A	O	ET PI	5Y 2Y	
30PEB21AA002	Isolation Downstream XJG10 AC001	BF	MA	3	B	A	O	ET PI	5Y 2Y	
30PEB21AA195	Air Release 30XJG10 AC001	RV	SA	3	C	A	O/C	ET LT PI	10Y 10Y 2Y	
30PEB21AA196	Thermal Relief Downstream 30XJG10 AC001	RV	SA	3	C	A	O/C	ET LT PI	10Y 10Y 2Y	

Table 3.9.6-2—Inservice Valve Testing Program Requirements (Sheet 79 of 103)

Valve Identification Number[1]	Description/ Valve Function	Valve Type[2]	Valve Actuator[3]	ASME Code Class[4]	ASME OM Code Category[5]	Active / Passive[6]	Safety Position[7]	Test Required[8,10]	Test Frequency[9]	Comments
30PEB20AA002	Recirculation Isolation PEB20 AP001	BF	MO	3	B	A	C	ET PI	Q 2Y	
30PEB20AA003	Emergency Blowdown Isolation PEB20	BF	MO	3	A	A	C	ET PI LT	Q 2Y 2Y	
30PEB20AA005	Pump Discharge Isolation PEB20 AP001	BF	MO	3	A~~B~~	A	O	ET PI LT	Q 2Y 2Y	
30PEB20AA007	Isolation Upstream KAA20 AC001	BF	MA	3	B	A	O	ET PI	5Y 2Y	
30PEB20AA009	Isolation Downstream KAA20 AC001	BF	MA	3	B	A	O	ET PI	5Y 2Y	
30PEB20AA015	Filter Blowdown Isolation PEB20 AP001	GT	MO	3	A	A	C	ET PI LT	Q 2Y 2Y	
30PEB20AA016	Blowdown Isolation PEB20	GB	MO	3	A	A	C	ET PI LT	Q 2Y 2Y	
30PEB20AA190	Air Release from Filter 30PEB20AT002	RV	SA	3	C	A	O/C	ET LT PI	10Y 10Y 2Y	
30PEB21AA191	Vacuum Breaker Downstream SAQ20 AC001	RV	SA	3	C	A	O/C	ET LT PI	2Y 10Y 2Y	

Table 3.9.6-2—Inservice Valve Testing Program Requirements (Sheet 80 of 103)

Valve Identification Number[1]	Description/ Valve Function	Valve Type[2]	Valve Actuator[3]	ASME Code Class[4]	ASME OM Code Category[5]	Active / Passive[6]	Safety Position[7]	Test Required[8,10]	Test Frequency[9]	Comments
30PEB20AA192	Thermal Relief Downstream KAA20 AC001	RV	SA	3	C	A	O/C	ET LT PI	10Y 10Y 2Y	
30PEB20AA204	Pump Discharge Check PEB20 AP001	CK	SA	3	A/C	A	O	ET LT	Q 2Y	
30PEB21AA001	Isolation Upstream SAQ20 AC001	GB	MA	3	B	A	O	ET PI	5Y 2Y	
30PEB21AA002	Isolation Downstream SAQ20 AC001	GB	MA	3	B	A	O	ET PI	5Y 2Y	
30PEB22AA001	Isolation Upstream XJG20 AC002	BF	MA	3	B	A	O	ET PI	5Y 2Y	
30PEB22AA002	Isolation Downstream XJG20 AC001	BF	MA	3	B	A	O	ET PI	5Y 2Y	
30PEB22AA195	Air Release 30XJG20 AC001	RV	SA	3	C	A	O/C	ET LT PI	10Y 10Y 2Y	
30PEB22AA196	Thermal Relief Downstream 30XJG20 AC001	RV	SA	3	C	A	O/C	ET LT PI	10Y 10Y 2Y	
30PEB23AA001	Isolation Upstream XJG30 AC002	BF	MA	3	B	A	O	ET PI	5Y 2Y	

Table 3.9.6-2—Inservice Valve Testing Program Requirements (Sheet 81 of 103)

Valve Identification Number[1]	Description/ Valve Function	Valve Type[2]	Valve Actuator[3]	ASME Code Class[4]	ASME OM Code Category[5]	Active / Passive[6]	Safety Position[7]	Test Required[8,10]	Test Frequency[9]	Comments
30PEB23AA002	Isolation Downstream XJG30 AC001	BF	MA	3	B	A	O	ET PI	5Y 2Y	
30PEB23AA195	Air Release 30XJG30 AC001	RV	SA	3	C	A	O/C	ET LT PI	10Y 10Y 2Y	
30PEB23AA196	Thermal Relief Downstream 30XJG30 AC001	RV	SA	3	C	A	O/C	ET LT PI	10Y 10Y 2Y	
30PEB30AA002	Recirculation Isolation PEB30 AP001	BF	MO	3	B	A	C	ET PI	Q 2Y	
30PEB30AA003	Emergency Blowdown Isolation PEB30	BF	MO	3	A	A	C	ET PI LT	Q 2Y 2Y	
30PEB30AA005	Pump Discharge Isolation PEB30 AP001	BF	MO	3	~~B~~A	A	O	ET PI LT	Q 2Y 2Y	
30PEB30AA007	Isolation Upstream KAA30 AC001	BF	MA	3	B	A	O	ET PI	5Y 2Y	
30PEB30AA009	Isolation Downstream KAA30 AC001	BF	MA	3	B	A	O	ET PI	5Y 2Y	
30PEB30AA015	Filter Blowdown Isolation PEB30 AP001	GT	MO	3	A	A	C	ET PI LT	Q 2Y 2Y	

Table 3.9.6-2—Inservice Valve Testing Program Requirements (Sheet 82 of 103)

Valve Identification Number[1]	Description/ Valve Function	Valve Type[2]	Valve Actuator[3]	ASME Code Class[4]	ASME OM Code Category[5]	Active / Passive[6]	Safety Position[7]	Test Required[8,10]	Test Frequency[9]	Comments
30PEB30AA016	Blowdown Isolation PEB30	GB	MO	3	A	A	C	ET PI LT	Q 2Y 2Y	
30PEB30AA190	Air Release from Filter 30PEB30AT002	RV	SA	3	C	A	O/C	ET LT PI	10Y 10Y 2Y	
30PEB31AA191	Vacuum breaker Downstream SAQ30 AC001	RV	SA	3	C	A	O/C	ET LT PI	2Y 10Y 2Y	
30PEB30AA192	Thermal Relief Downstream KAA30 AC001	RV	SA	3	C	A	O/C	ET LT PI	10Y 10Y 2Y	
30PEB30AA204	Pump Discharge Check PEB30 AP001	CK	SA	3	A/C	A	O	ET LT	Q 2Y	
30PEB31AA001	Isolation Upstream SAQ30 AC001	GB	MA	3	B	A	O	ET PI	5Y 2Y	
30PEB31AA002	Isolation Downstream SAQ30 AC001	GB	MA	3	B	A	O	ET PI	5Y 2Y	
30PEB24AA001	Isolation Upstream XJG40 AC002	BF	MA	3	B	A	O	ET PI	5Y 2Y	
30PEB24AA002	Isolation Downstream XJG40 AC001	BF	MA	3	B	A	O	ET PI	5Y 2Y	

Table 3.9.6-2—Inservice Valve Testing Program Requirements (Sheet 83 of 103)

Valve Identification Number[1]	Description/ Valve Function	Valve Type[2]	Valve Actuator[3]	ASME Code Class[4]	ASME OM Code Category[5]	Active / Passive[6]	Safety Position[7]	Test Required[8,10]	Test Frequency[9]	Comments
30PEB24AA195	Air Release 30XJG40 AC001	RV	SA	3	C	A	O/C	ET LT PI	10Y 10Y 2Y	
30PEB24AA196	Thermal Relief Downstream 30XJG40 AC001	RV	SA	3	C	A	O/C	ET LT PI	10Y 10Y 2Y	
30PEB40AA002	Recirculation Isolation PEB40 AP001	BF	MO	3	B	A	C	ET PI	Q 2Y	
30PEB40AA003	Emergency Blowdown Isolation PEB40	BF	MO	3	A	A	C	ET PI LT	Q 2Y 2Y	
30PEB40AA005	Pump Discharge Isolation PEB40 AP001	BF	MO	3	~~B~~A	A	O	ET PI LT	Q 2Y 2Y	
30PEB40AA007	Isolation Upstream KAA40 AC001	BF	MA	3	B	A	O	ET PI	5Y 2Y	
30PEB40AA009	Isolation Downstream KAA40 AC001	BF	MA	3	B	A	O	ET PI	5Y 2Y	
30PEB40AA015	Filter Blowdown Isolation PEB40 AP001	GT	MO	3	A	A	C	ET PI LT	Q 2Y 2Y	
30PEB40AA016	Blowdown Isolation PEB40	GB	MO	3	A	A	C	ET PI LT	Q 2Y 2Y	

Table 3.9.6-2—Inservice Valve Testing Program Requirements (Sheet 84 of 103)

Valve Identification Number[1]	Description/ Valve Function	Valve Type[2]	Valve Actuator[3]	ASME Code Class[4]	ASME OM Code Category[5]	Active / Passive[6]	Safety Position[7]	Test Required[8,10]	Test Frequency[9]	Comments
30PEB40AA190	Air Release from Filter 30PEB40AT002	RV	SA	3	C	A	O/C	ET LT PI	10Y 10Y 2Y	
30PEB41AA191	Vacuum breaker Downstream SAQ40 AC001	RV	SA	3	C	A	O/C	ET LT PI	2Y 10Y 2Y	
30PEB40AA192	Thermal Relief Downstream KAA40 AC001	RV	SA	3	C	A	O/C	ET LT PI	10Y 10Y 2Y	
30PEB40AA204	Pump Discharge Check PEB40 AP001	CK	SA	3	A/C	A	O	ET LT	Q 2Y	
30PEB41AA001	Isolation Upstream SAQ40 AC001	GB	MA	3	B	A	O	ET PI	5Y 2Y	
30PEB41AA002	Isolation Downstream SAQ40 AC001	GB	MA	3	B	A	O	ET PI	5Y 2Y	
30PEB41AA011	Dedicated System Check Upstream SAQ40 AC001	CK	SA	3	A/C	A	C	ET PI LT	Q 2Y 2Y	
30PEB80AA004	Isolation Downstream KAA80 AC001	BF	MA	3	B	A	O	ET PI	5Y 2Y	
30PED10AA010	Tower Isolation	BF	MO	3	~~B~~A	A	O	ET PI LT	Q 2Y 2Y	

Table 3.9.6-2—Inservice Valve Testing Program Requirements (Sheet 85 of 103)

Valve Identification Number[1]	Description/ Valve Function	Valve Type[2]	Valve Actuator[3]	ASME Code Class[4]	ASME OM Code Category[5]	Active / Passive[6]	Safety Position[7]	Test Required[8,10]	Test Frequency[9]	Comments
30PED10AA011	Tower Bypass Isolation	BF	MO	3	B	A	C	ET PI	Q 2Y	
30PED10AA019	Makeup Water Isolation	BF	MO	3	B	A	C	ET PI	Q 2Y	
30PED10AA021	Emergency Makeup Water Isolation	BF	MO	3	B	A	O	ET PI	Q 2Y	
30PED10AA220	Makeup Water Check	CK	SA	3	C	A	C	ET	Q	
30PED10AA024	Tower Keep-Fill Isolation	PL	MA	3	B	A	C	ET LT PI	Q 2Y 2Y	
30PED20AA024	Tower Keep-Fill Isolation	PL	MA	3	B	A	C	ET LT PI	Q 2Y 2Y	
30PED30AA024	Tower Keep-Fill Isolation	PL	MA	3	B	A	C	ET LT PI	Q 2Y 2Y	
30PED40AA024	Tower Keep-Fill Isolation	PL	MA	3	B	A	C	ET LT PI	Q 2Y 2Y	
30PED10AA025	Tower Keep-Fill Check	CK	SA	3	C	A	C	ET	Q	
30PED20AA025	Tower Keep-Fill Check	CK	SA	3	C	A	C	ET	Q	

Table 3.9.6-2—Inservice Valve Testing Program Requirements (Sheet 86 of 103)

Valve Identification Number[1]	Description/ Valve Function	Valve Type[2]	Valve Actuator[3]	ASME Code Class[4]	ASME OM Code Category[5]	Active / Passive[6]	Safety Position[7]	Test Required[8,10]	Test Frequency[9]	Comments
30PED30AA025	Tower Keep-Fill Check	CK	SA	3	C	A	C	ET	Q	
30PED40AA025	Tower Keep-Fill Check	CK	SA	3	C	A	C	ET	Q	
30PED20AA010	Tower Isolation	BF	MO	3	~~B~~A	A	O	ET PI LT	Q 2Y 2Y	
30PED20AA011	Tower Bypass Isolation	BF	MO	3	B	A	C	ET PI	Q 2Y	
30PED20AA019	Makeup Water Isolation	BF	MO	3	B	A	C	ET PI	Q 2Y	
30PED20AA021	Emergency Makeup Water Isolation	BF	MO	3	B	A	O	ET PI	Q 2Y	
30PED20AA220	Makeup Water Check	CK	SA	3	C	A	C	ET	Q	
30PED30AA010	Tower Isolation	BF	MO	3	~~B~~A	A	O	ET PI LT	Q 2Y 2Y	
30PED30AA011	Tower Bypass Isolation	BF	MO	3	B	A	C	ET PI	Q 2Y	
30PED30AA019	Makeup Water Isolation	BF	MO	3	B	A	C	ET PI	Q 2Y	
30PED30AA021	Emergency Makeup Water Isolation	BF	MO	3	B	A	O	ET PI	Q 2Y	

Table 3.9.6-2—Inservice Valve Testing Program Requirements (Sheet 87 of 103)

Valve Identification Number[1]	Description/ Valve Function	Valve Type[2]	Valve Actuator[3]	ASME Code Class[4]	ASME OM Code Category[5]	Active / Passive[6]	Safety Position[7]	Test Required[8,10]	Test Frequency[9]	Comments
30PED30AA220	Makeup Water Check	CK	SA	3	C	A	C	ET	Q	
30PED40AA010	Tower Isolation	BF	MO	3	~~B~~A	A	O	ET PI LT	Q 2Y 2Y	
30PED40AA011	Tower Bypass Isolation	BF	MO	3	B	A	C	ET PI	Q 2Y	
30PED40AA019	Makeup Water Isolation	BF	MO	3	B	A	C	ET PI	Q 2Y	
30PED40AA021	Emergency Makeup Water Isolation	BF	MO	3	B	A	O	ET PI	Q 2Y	
30PED40AA220	Makeup Water Check	CK	SA	3	C	A	C	ET	Q	
~~30PED10AA206~~	~~Blowdown Check~~	~~CK~~	~~SA~~	~~3~~	~~C~~	~~A~~	~~C~~	~~ET~~	~~Q~~	
~~30PED20AA206~~	~~Blowdown Check~~	~~CK~~	~~SA~~	~~3~~	~~C~~	~~A~~	~~C~~	~~ET~~	~~Q~~	
~~30PED30AA206~~	~~Blowdown Check~~	~~CK~~	~~SA~~	~~3~~	~~C~~	~~A~~	~~C~~	~~ET~~	~~Q~~	
~~30PED40AA206~~	~~Blowdown Check~~	~~CK~~	~~SA~~	~~3~~	~~C~~	~~A~~	~~C~~	~~ET~~	~~Q~~	
~~30PED10AA023~~	~~UHS Makeup Water Test Isolation~~	~~BF~~	~~MO~~	~~3~~	~~B~~	~~P~~	~~C~~	~~ET~~ ~~PI~~	~~Q~~ ~~2Y~~	
~~30PED20AA023~~	~~UHS Makeup Water Test Isolation~~	~~BF~~	~~MO~~	~~3~~	~~B~~	~~P~~	~~C~~	~~ET~~ ~~PI~~	~~Q~~ ~~2Y~~	

Table 3.9.6-2—Inservice Valve Testing Program Requirements (Sheet 88 of 103)

Valve Identification Number[1]	Description/ Valve Function	Valve Type[2]	Valve Actuator[3]	ASME Code Class[4]	ASME OM Code Category[5]	Active / Passive[6]	Safety Position[7]	Test Required[8,10]	Test Frequency[9]	Comments
~~30PED30AA023~~	~~UHS Makeup Water Test Isolation~~	~~BF~~	~~MO~~	~~3~~	~~B~~	~~P~~	~~C~~	~~ET PI~~	~~Q 2Y~~	
~~30PED40AA023~~	~~UHS Makeup Water Test Isolation~~	~~BF~~	~~MO~~	~~3~~	~~B~~	~~P~~	~~C~~	~~ET PI~~	~~Q 2Y~~	
30QKA10AA003	QK Pump #1 Discharge Check Valve, Train 1	CK	SA	3	C	A	O/C	ET	Q	
30QKA10AA011	QK QCB Check Valve, Train 1	CK	SA	3	C	A	O/C	ET	Q	
30QKA10AA018	QK Pump #2 Discharge Check Valve, Train 1	CK	SA	3	C	A	O/C	ET	Q	
30QKA10AA101	QK Bypass Control Valve-MOV, Train 1	GB	MO	3	B	A	O/C	ET PI	Q 2Y	
30QKA10AA191	QK System Pressure Relief Valve, Train 1	RV	SA	3	C	A	O/C	ET LT PI	10Y 10Y 2Y	
30QKA20AA003	QK Pump #1 Discharge Check Valve, Train 2	CK	SA	3	C	A	O/C	ET	Q	
30QKA20AA011	QK QCB Check Valve, Train 2	CK	SA	3	C	A	O/C	ET	Q	

Table 3.9.6-2—Inservice Valve Testing Program Requirements (Sheet 89 of 103)

Valve Identification Number[1]	Description/ Valve Function	Valve Type[2]	Valve Actuator[3]	ASME Code Class[4]	ASME OM Code Category[5]	Active / Passive[6]	Safety Position[7]	Test Required[8,10]	Test Frequency[9]	Comments
30QKA20AA018	QK Pump #2 Suct Isolation Valve, Train 2	CK	SA	3	C	A	O/C	ET	Q	
30QKA20AA101	QK Bypass Control Valve-MOV, Train 2	GB	MO	3	B	A	O/C	ET PI	Q 2Y	
30QKA20AA191	QK System Pressure Relief Valve, Train 2	RV	SA	3	C	A	O/C	ET LT PI	10Y 10Y 2Y	
30QKA30AA003	QK Pump #1 Discharge Check Valve, Train 3	CK	SA	3	C	A	O/C	ET	Q	
30QKA30AA011	QK QCB Check Valve, Train 3	CK	SA	3	C	A	O/C	ET	Q	
30QKA30AA018	QK Pump #2 Discharge Check Valve, Train 3	CK	SA	3	C	A	O/C	ET	Q	
30QKA30AA101	QK Bypass Control Valve-MOV, Train 3	GB	MO	3	B	A	O/C	ET PI	Q 2Y	
30QKA30AA191	QK System Pressure Relief Valve, Train 3	RV	SA	3	C	A	O/C	ET LT PI	10Y 10Y 2Y	
30QKA40AA003	QK Pump #1 Discharge Check Valve, Train 4	CK	SA	3	C	A	O/C	ET	Q	

Table 3.9.6-2—Inservice Valve Testing Program Requirements (Sheet 90 of 103)

Valve Identification Number[1]	Description/ Valve Function	Valve Type[2]	Valve Actuator[3]	ASME Code Class[4]	ASME OM Code Category[5]	Active / Passive[6]	Safety Position[7]	Test Required[8,10]	Test Frequency[9]	Comments
30QKA40AA011	QK QCB Check Valve, Train 4	CK	SA	3	C	A	O/C	ET	Q	
30QKA40AA018	QK Pump #2 Discharge Check Valve, Train 4	CK	SA	3	C	A	O/C	ET	Q	
30QKA40AA101	QK Bypass Control Valve-MOV, Train 4	GB	MO	3	B	A	O/C	ET PI	Q 2Y	
30QKA40AA191	QK System Pressure Relief Valve, Train 4	RV	SA	3	C	A	O/C	ET LT PI	10Y 10Y 2Y	
30QKA10AA002	Pump Isolation Valve, Train 1	~~PL~~BF	MA	3	B	P	O/C	ET	5Y	
30QKA10AA004	Pump Isolation Valve, Train 1	~~PL~~BF	MA	3	B	P	O/C	ET	5Y	
30QKA10AA006	Pump and Chiller Isolation Valve, Train 1	~~PL~~BF	MA	3	B	P	O/C	ET	5Y	
30QKA10AA017	Pump Isolation Valve, Train 1	~~PL~~BF	MA	3	B	P	O/C	ET	5Y	
30QKA10AA019	Pump Isolation Valve, Train 1	~~PL~~BF	MA	3	B	P	O/C	ET	5Y	
30QKA20AA002	Pump Isolation Valve, Train 2	~~PL~~BF	MA	3	B	P	O/C	ET	5Y	
30QKA20AA004	Pump Isolation Valve, Train 2	~~PL~~BF	MA	3	B	P	O/C	ET	5Y	

Table 3.9.6-2—Inservice Valve Testing Program Requirements (Sheet 91 of 103)

Valve Identification Number[1]	Description/ Valve Function	Valve Type[2]	Valve Actuator[3]	ASME Code Class[4]	ASME OM Code Category[5]	Active / Passive[6]	Safety Position[7]	Test Required[8,10]	Test Frequency[9]	Comments
30QKA20AA006	Pump and Chiller Isolation Valve, Train 2	~~PL~~BF	MA	3	B	P	O/C	ET	5Y	
30QKA20AA017	Pump Isolation Valve, Train 2	~~PL~~BF	MA	3	B	P	O/C	ET	5Y	
30QKA20AA019	Pump Isolation Valve, Train 2	~~PL~~BF	MA	3	B	P	O/C	ET	5Y	
30QKA30AA002	Pump Isolation Valve, Train 3	~~PL~~BF	MA	3	B	P	O/C	ET	5Y	
30QKA30AA004	Pump Isolation Valve, Train 3	~~PL~~BF	MA	3	B	P	O/C	ET	5Y	
30QKA30AA006	Pump and Chiller Isolation Valve, Train 3	~~PL~~BF	MA	3	B	P	O/C	ET	5Y	
30QKA30AA017	Pump Isolation Valve, Train 3	~~PL~~BF	MA	3	B	P	O/C	ET	5Y	
30QKA30AA019	Pump Isolation Valve, Train 3	~~PL~~BF	MA	3	B	P	O/C	ET	5Y	
30QKA40AA002	Pump Isolation Valve, Train 4	~~PL~~BF	MA	3	B	P	O/C	ET	5Y	
30QKA40AA004	Pump Isolation Valve, Train 4	~~PL~~BF	MA	3	B	P	O/C	ET	5Y	
30QKA40AA006	Pump and Chiller Isolation Valve, Train 4	~~PL~~BF	MA	3	B	P	O/C	ET	5Y	

Table 3.9.6-2—Inservice Valve Testing Program Requirements (Sheet 92 of 103)

Valve Identification Number[1]	Description/ Valve Function	Valve Type[2]	Valve Actuator[3]	ASME Code Class[4]	ASME OM Code Category[5]	Active / Passive[6]	Safety Position[7]	Test Required[8,10]	Test Frequency[9]	Comments
30QKA40AA017	Pump Isolation Valve, Train 4	~~PL~~BF	MA	3	B	P	O/C	ET	5Y	
30QKA40AA019	Pump Isolation Valve, Train 4	~~PL~~BF	MA	3	B	P	O/C	ET	5Y	
30QKB10AA001	30SAB10AC001 Isolation Valve, Train 1	PL	MA	3	B	P	O/C	ET	5Y	
30QKB10AA004	30SAB10AC001 Isolation Valve, Train 1	PL	MA	3	B	P	O/C	ET	5Y	
30QKB20AA001	30SAB20AC001 Isolation Valve, Train 2	PL	MA	3	B	P	O/C	ET	5Y	
30QKB20AA004	30SAB20AC001 Isolation Valve, Train 2	PL	MA	3	B	P	O/C	ET	5Y	
30QKB30AA001	30SAB30AC001 Isolation Valve, Train 3	PL	MA	3	B	P	O/C	ET	5Y	
30QKB30AA004	30SAB30AC001 Isolation Valve, Train 3	PL	MA	3	B	P	O/C	ET	5Y	
30QKA10AA016	Demin Water Check Valve	CK	SA	3	C	A	O/C	ET	Q	-
30QKA20AA016	Demin Water Check Valve	CK	SA	3	C	A	O/C	ET	Q	-

Table 3.9.6-2—Inservice Valve Testing Program Requirements (Sheet 93 of 103)

Valve Identification Number[1]	Description/ Valve Function	Valve Type[2]	Valve Actuator[3]	ASME Code Class[4]	ASME OM Code Category[5]	Active / Passive[6]	Safety Position[7]	Test Required[8,10]	Test Frequency[9]	Comments
30QKA30AA016	Demin Water Check Valve	CK	SA	3	C	A	O/C	ET	Q	-
30QKA40AA016	Demin Water Check Valve	CK	SA	3	C	A	O/C	ET	Q	-
30QKA10AA020	Pump and Chiller Isolation Valve, Div. 1	BF	MA	3	B	P	O/C	ET	5Y	-
30QKA10AA021	Pump and Chiller Isolation Valve, Div. 1	BF	MA	3	B	P	O/C	ET	5Y	-
30QKA10AA022	Pump and Chiller Isolation Valve, Div. 1	BF	MA	3	B	P	O/C	ET	5Y	-
30QKA20AA020	Pump and Chiller Isolation Valve, Div. 2	BF	MA	3	B	P	O/C	ET	5Y	-
30QKA20AA021	Pump and Chiller Isolation Valve, Div. 2	BF	MA	3	B	P	O/C	ET	5Y	-
30QKA20AA022	Pump and Chiller Isolation Valve, Div. 2	BF	MA	3	B	P	O/C	ET	5Y	-
30QKA30AA020	Pump and Chiller Isolation Valve, Div. 3	BF	MA	3	B	P	O/C	ET	5Y	-

Table 3.9.6-2—Inservice Valve Testing Program Requirements (Sheet 94 of 103)

Valve Identification Number[1]	Description/ Valve Function	Valve Type[2]	Valve Actuator[3]	ASME Code Class[4]	ASME OM Code Category[5]	Active / Passive[6]	Safety Position[7]	Test Required[8,10]	Test Frequency[9]	Comments
30QKA30AA021	Pump and Chiller Isolation Valve, Div. 3	BF	MA	3	B	P	O/C	ET	5Y	-
30QKA30AA022	Pump and Chiller Isolation Valve, Div. 3	BF	MA	3	B	P	O/C	ET	5Y	-
30QKA40AA020	Pump and Chiller Isolation Valve, Div. 4	BF	MA	3	B	P	O/C	ET	5Y	-
30QKA40AA021	Pump and Chiller Isolation Valve, Div. 4	BF	MA	3	B	P	O/C	ET	5Y	-
30QKA40AA022	Pump and Chiller Isolation Valve, Div. 4	BF	MA	3	B	P	O/C	ET	5Y	-
30QKA10AA028	Cross-tie Manual Isolation Valve, Div. 1	BF	MA	3	B	P	O/C	ET	5Y	-
30QKA10AA029	Cross-tie Manual Isolation Valve, Div. 1	BF	MA	3	B	P	O/C	ET	5Y	-
30QKA20AA028	Cross-tie Manual Isolation Valve, Div. 2	BF	MA	3	B	P	O/C	ET	5Y	-
30QKA20AA029	Cross-tie Manual Isolation Valve, Div. 2	BF	MA	3	B	P	O/C	ET	5Y	-

Table 3.9.6-2—Inservice Valve Testing Program Requirements (Sheet 95 of 103)

Valve Identification Number[1]	Description/ Valve Function	Valve Type[2]	Valve Actuator[3]	ASME Code Class[4]	ASME OM Code Category[5]	Active / Passive[6]	Safety Position[7]	Test Required[8,10]	Test Frequency[9]	Comments
30QKA30AA028	Cross-tie Manual Isolation Valve, Div. 3	BF	MA	3	B	P	O/C	ET	5Y	-
30QKA30AA029	Cross-tie Manual Isolation Valve, Div. 3	BF	MA	3	B	P	O/C	ET	5Y	-
30QKA40AA028	Cross-tie Manual Isolation Valve, Div. 4	BF	MA	3	B	P	O/C	ET	5Y	-
30QKA40AA029	Cross-tie Manual Isolation Valve, Div. 4	BF	MA	3	B	P	O/C	ET	5Y	-
30QKA10AA102	Cross-tie Supply Valve, Div. 1	BF	MO	3	A	A	O/C	LT PI ST	2Y 2Y Q	-
30QKA10AA103	Cross-tie Return Valve, Div. 1	BF	MO	3	A	A	O/C	LT PI ST	2Y 2Y Q	-
30QKA20AA102	Cross-tie Supply Valve, Div. 2	BF	MO	3	A	A	O/C	LT PI ST	2Y 2Y Q	-
30QKA20AA103	Cross-tie Return Valve, Div. 2	BF	MO	3	A	A	O/C	LT PI ST	2Y 2Y Q	-
30QKA30AA102	Cross-tie Supply Valve, Div. 3	BF	MO	3	A	A	O/C	LT PI ST	2Y 2Y Q	-

Table 3.9.6-2—Inservice Valve Testing Program Requirements (Sheet 96 of 103)

Valve Identification Number[1]	Description/ Valve Function	Valve Type[2]	Valve Actuator[3]	ASME Code Class[4]	ASME OM Code Category[5]	Active / Passive[6]	Safety Position[7]	Test Required[8,10]	Test Frequency[9]	Comments
30QKA30AA103	Cross-tie Return Valve, Div. 3	BF	MO	3	A	A	O/C	LT PI ST	2Y 2Y Q	-
30QKA40AA102	Cross-tie Supply Valve, Div. 4	BF	MO	3	A	A	O/C	LT PI ST	2Y 2Y Q	-
30QKA40AA103	Cross-tie Return Valve, Div. 4	BF	MO	3	A	A	O/C	LT PI ST	2Y 2Y Q	-
30QKB40AA001	30SAB40AC001 Isolation Valve, Train 4	PL	MA	3	B	P	O/C	ET	5Y	
30QKB40AA004	30SAB40AC001 Isolation Valve, Train 4	PL	MA	3	B	P	O/C	ET	5Y	
30QKB10AA101	SAB01AC001 Control Valve-MOV, Train 1	GB	MO	3	B	A	O/C	ET PI	Q 2Y	
30QKB20AA101	SAB02AC001 Control Valve-MOV, Train 2	GB	MO	3	B	A	O/C	ET PI	Q 2Y	
30QKB30AA101	SAB03AC001 Control Valve-MOV, Train 3	GB	MO	3	B	A	O/C	ET PI	Q 2Y	
30QKB40AA101	SAB04AC001 Control Valve-MOV, Train 4	GB	MO	3	B	A	O/C	ET PI	Q 2Y	

Table 3.9.6-2—Inservice Valve Testing Program Requirements (Sheet 97 of 103)

Valve Identification Number[1]	Description/ Valve Function	Valve Type[2]	Valve Actuator[3]	ASME Code Class[4]	ASME OM Code Category[5]	Active / Passive[6]	Safety Position[7]	Test Required[8,10]	Test Frequency[9]	Comments
30QKC10AA025	LHSI Pump Upstream Control Valve-MOV, Train 1	DI	MO	3	B	A	O/C	ET PI	Q 2Y	
30QKC10AA101	SAC01AC001 Control Valve-MOV, Train 1	GB	MO	3	B	A	O/C	ET PI	Q 2Y	
30QKC20AA101	SAC02AC001 Control Valve-MOV, Train 2	GB	MO	3	B	A	O/C	ET PI	Q 2Y	
30QKC30AA101	SAC03AC001 Control Valve-MOV, Train 3	GB	MO	3	B	A	O/C	ET PI	Q 2Y	
30QKC40AA025	LHSI Pump Upstream Control Valve-MOV, Train 4	DI	MO	3	B	A	O/C	ET PI	Q 2Y	
30QKC40AA101	SAC04AC001 Control Valve-MOV, Train 4	GB	MO	3	B	A	O/C	ET PI	Q 2Y	
30QNJ41AA002	Operational Chilled Water Outside CIV	GT	MO	2	A	A	C	ET ST LT PI	Q Q 2Y 2Y	
30QNJ41AA003	Operational Chilled Water Inside CIV	CK	SA	2	A	A	C	ET LT PI	CS RF 2Y	

Table 3.9.6-2—Inservice Valve Testing Program Requirements (Sheet 98 of 103)

Valve Identification Number[1]	Description/ Valve Function	Valve Type[2]	Valve Actuator[3]	ASME Code Class[4]	ASME OM Code Category[5]	Active / Passive[6]	Safety Position[7]	Test Required[8,10]	Test Frequency[9]	Comments
30QNJ41AA027	Operational Chilled Water Inside CIV	GT	MO	2	A	A	C	ET ST LT PI	Q Q 2Y 2Y	
30QNJ41AA028	Operational Chilled Water Outside CIV	GT	MO	2	A	A	C	ET ST LT PI	Q Q 2Y 2Y	
30QNJ41AA192	QNJ Pressure Relief Valve	RV	SA	3	C	A	O/C	ET LT PI	10Y 10Y 2Y	
30XJG10AA201	Jacket Water Pump Discharge Check Valve	CK	SA	3	C	A	O	ET	Q	
30XJG10AA190	Jacket Water Pump Discharge Relief Valve	RV	SA	3	C	P	C	ET LT	10Y 10Y	
30XJG10AA150	Expansion Tank Fill Valve	GB	SO	3	B	P	C	PI	2Y	
30XJG10AA151	Expansion Tank Fill Valve	GB	SO	3	B	P	C	PI	2Y	
30XJG10AA260	Keep Warm System Inlet Isolation Valve	GB	SO	3	B	A	C	ET ST PI	Q Q 2Y	
30XJG10AA261	Keep Warm System Inlet Isolation Valve	GB	SO	3	B	A	C	ET ST PI	Q Q 2Y	

Next File

Table 3.9.6-2—Inservice Valve Testing Program Requirements (Sheet 99 of 103)

Valve Identification Number[1]	Description/ Valve Function	Valve Type[2]	Valve Actuator[3]	ASME Code Class[4]	ASME OM Code Category[5]	Active / Passive[6]	Safety Position[7]	Test Required[8,10]	Test Frequency[9]	Comments
30XJG10AA202	Keep Warm System Discharge Isolation Valve	CK	SA	3	C	A	C	ET	Q	
30XJG10AA203	Keep Warm System Discharge Isolation Valve	CK	SA	3	C	A	C	ET	Q	
30XJN10AA191A	Fuel Transfer Pump A Discharge Relief Valve	RV	SA	3	C	P	C	ET LT	10Y 10Y	
30XJN10AA191B	Fuel Transfer Pump B Discharge Relief Valve	RV	SA	3	C	P	C	ET LT	10Y 10Y	
30XJN10AA201A	Fuel Transfer Pump Discharge Check Valve	CK	SA	3	C	A	O	ET	Q	
30XJN10AA201B	Fuel Transfer Pump Discharge Check Valve	CK	SA	3	C	A	O	ET	Q	
30XJN10AA193	Fuel Transfer Pump A Discharge Relief Valve	RV	SA	3	C	P	C	ET LT	10Y 10Y	
30XJN10AA203A	Fuel Filter A Discharge Check Valve	CK	SA	3	C	A	O	ET	Q	

Table 3.9.6-2—Inservice Valve Testing Program Requirements (Sheet 100 of 103)

Valve Identification Number[1]	Description/ Valve Function	Valve Type[2]	Valve Actuator[3]	ASME Code Class[4]	ASME OM Code Category[5]	Active / Passive[6]	Safety Position[7]	Test Required[8,10]	Test Frequency[9]	Comments
30XJN10AA203B	Fuel Filter B Discharge Check Valve	CK	SA	3	C	A	O	ET	Q	
30XJN10AA172	Fuel Pump Supply Emergency Shutoff Valve	GB	SO	3	B	P	O	PI	2Y	
30XJN10AA226	Auxiliary Fuel Pump Discharge Check Valve	CK	SA	3	C	A	O	ET	Q	
30XJN10AA196	Auxiliary Fuel Pump Discharge Relief Valve	RV	SA	3	C	P	O	ET LT	10Y 10Y	
30XJN10AA227	Engine Driven Fuel Pump Discharge Check Valve	CK	SA	3	C	A	O	ET	Q	
30XJN10AA195	Engine Driven Fuel Pump Discharge Relief Valve	RV	SA	3	C	P	C	ET LT	10Y 10Y	
30XJN10AA220A	Fuel Filter A Discharge Check Valve	CK	SA	3	C	A	O	ET	Q	
30XJN10AA220B	Fuel Filter B Discharge Check Valve	CK	SA	3	C	A	O	ET	Q	

Table 3.9.6-2—Inservice Valve Testing Program Requirements (Sheet 101 of 103)

Valve Identification Number[1]	Description/ Valve Function	Valve Type[2]	Valve Actuator[3]	ASME Code Class[4]	ASME OM Code Category[5]	Active / Passive[6]	Safety Position[7]	Test Required[8,10]	Test Frequency[9]	Comments
30XJN10AA198	Engine Fuel Discharge Header Relief Valve	RV	SA	3	C	P	C	ET LT	10Y 10Y	
30XJN10AA228	Engine Fuel Discharge Header Check Valve	CK	SA	3	C	A	O	ET	Q	
30XJQ10AA112A	Combustion Air Intake Isolation Damper	BF	MO	3	B	P	O	PI	2Y	
30XJQ10AA112B	Combustion Air Intake Isolation Damper	BF	MO	3	B	P	O	PI	2Y	
30XJR10AA120	Engine Exhaust System Rupture Disk	RD	SA	3	D	A	O	VT	5Y	
30XJV10AA190	Lube Oil Pump Discharge Relief Valve	RV	SA	3	C	P	C	ET LT	10Y 10Y	
30XJV10AA201A	Lube Oil Filter A Discharge Check Valve	CK	SA	3	C	A	O	ET	Q	
30XJV10AA201B	Lube Oil Filter B Discharge Check Valve	CK	SA	3	C	A	O	ET	Q	
30XJV10AA191	Lube Oil Filter Relief Valve	RV	SA	3	C	P	C	ET LT	10Y 10Y	

Table 3.9.6-2—Inservice Valve Testing Program Requirements (Sheet 102 of 103)

Valve Identification Number[1]	Description/ Valve Function	Valve Type[2]	Valve Actuator[3]	ASME Code Class[4]	ASME OM Code Category[5]	Active / Passive[6]	Safety Position[7]	Test Required[8,10]	Test Frequency[9]	Comments
30XJV10AA270	Keep Warm System Inlet Isolation Valve	GB	SO	3	B	A	C	ET ST PI	Q Q 2Y	
30XJV10AA271	Keep Warm System Inlet Isolation Valve	GB	SO	3	B	A	C	ET ST PI	Q Q 2Y	
30XJV10AA206	Keep Warm System Discharge Isolation Valve	CK	SA	3	C	A	C	ET	Q	
30XJV10AA207	Keep Warm System Discharge Isolation Valve	CK	SA	3	C	A	C	ET	Q	
30XJV10AA194	Keep Warm System Relief Valve	RV	SA	3	C	P	C	ET LT	10Y 10Y	
30XJX10AA210A	Receiver A Inlet Check Valve	CK	SA	3	B/C	A	C	ET	Q	
30XJX10AA211A	Receiver A Inlet Check Valve	CK	SA	3	B/C	A	C	ET	Q	
30XJX10AA210B	Receiver B Inlet Check Valve	CK	SA	3	B/C	A	C	ET	Q	
30XJX10AA211B	Receiver B Inlet Check Valve	CK	SA	3	B/C	A	C	ET	Q	
30XJX10AA193A	Receiver A Pressure Relief Valve	RV	SA	3	C	P	C	ET LT	10Y 10Y	

Table 3.9.6-2—Inservice Valve Testing Program Requirements (Sheet 103 of 103)

Valve Identification Number[1]	Description/ Valve Function	Valve Type[2]	Valve Actuator[3]	ASME Code Class[4]	ASME OM Code Category[5]	Active / Passive[6]	Safety Position[7]	Test Required[8,10]	Test Frequency[9]	Comments
30XJX10AA193B	Receiver B Pressure Relief Valve	RV	SA	3	C	P	C	ET LT	10Y 10Y	
30XJX10AA122A	Air Start Pilot Valve A	GB	SO	3	B	A	O/C	ET ST PI	Q Q 2Y	
30XJX10AA122B	Air Start Pilot Valve B	GB	SO	3	B	A	O/C	ET ST PI	Q Q 2Y	
30XJX10AA120A	Air Start Valve A	GB	AO	3	B	A	O/C	ET ST LT PI	Q Q 2Y 2Y	LT per 10 CFR 50, Appendix J
30XJX10AA120B	Air Start Valve B	GB	AO	3	B	A	O/C	ET ST LT PI	Q Q 2Y 2Y	LT per 10 CFR 50, Appendix J

Notes:

1. The U.S. EPR subscribes to the Kraftwerks Kennzeichen System (KKS) for coding and nomenclature of SSC.
2. Valve Type:
   A. GB – Globe.
   B. GT – Gate.
   C. CK – Check.

D. RV – Relief.

E. RD – Rupture Disk.

F. DI – Diaphragm.

G. BF – Butterfly.

H. PL – Plug.

3. Valve Actuator:

A. MO – Motor-operated.

B. SO – Solenoid-operated.

C. AO – Air-operated.

D. HO – Hydraulic-operated.

E. SA – Self-actuated.

F. MA – Manual.

G. PA – Pilot actuated.

4. ASME Code Class as determined by quality groups from RG 1.26.

5. ASME Code Category A, B, C, or D as defined in ASME OM Code 2004, Subsection ISTC-1300.

6. ASME functional category as defined in ASME OM Code 2004, Subsection ISTA-2000.

7. Valve safety function positions, specifying both positions for valves that perform a safety function in both the open and closed positions. Valves are exercised to the position s required to fulfill their safety functions. Check valve tests include both open and close tests.

8. Required tests per ASME OM Code 2004, Subsection ISTC-3000:

A. LT – Leakage test per Table ISTC-3500-1 and ISTC-3600.

B. ET – Exercise test per Table ISTC-3500-1 and ISTC-3510, nominally every three months.

C. PI – Position indication verification per Table ISTC-3500-1 and ISTC-3700.

D. ST – Stroke time test per ISTC-5000 (in conjunction with exercise test).

9. Test frequencies abbreviations per NUREG-1482, Revision 1:

A. Q – Test performed once every 92 days.

B. CS – Test performed during cold shutdown, but not more frequently than once every 92 days.

C. RF – Test performed each refueling outage.

D. 2Y – Test performed once every two years.

E. 5Y – Test performed once every five years (per ASME OM, ISTC-3540).

F. 10Y – Test performed once every ten years.

G. RV – Test relief valve at OM schedule.

10. The switch for a fail-safe valve functions by interrupting (de-energizing) the electrical or pneumatic actuating force for the valve whenever the switch is moved to the fail-safe position. Therefore, this normal valve operation demonstrates the valve's fail-safe capability, which is verified during valve exercise testing by remote position indication. Since a successful exercise test satisfies a valve's fail-safe testing requirements, a separate test for fail-safe capability is not required and is not specified in this table.

Table 3.10-1—List of Seismically and Dynamically Qualified Mechanical and Electrical Equipment (Sheet 1 of 197)

Name Tag (Equipment Description)	Tag Number	Local Area KKS ID (Room Location)	EQ Environment (Note 1)	Radiation Environment Zone (Note 2)	EQ Designated Function (Note 3)	Safety Class (Note 4)		EQ Program Designation (Note 5)	
FLUID SYSTEMS									
Reactor Coolant System (RCS)									
RPV									
Reactor Pressure Vessel	30JAA10BB001	30UJA11001	H	H	SI	S			Y (5)
RPV O-ring Leakoff Vlv #1	30JAA10AA003	30UJA15005	H	H	SII	NS-AQ	C/NM	Y (4)	Y (5)
RPV O-ring Leakoff Vlv #2	30JAA10AA004	30UJA15005	H	H	SII	NS-AQ	C/NM	Y (4)	Y (5)
RPV O-ring Leakoff Drain Vlv	30JAA10AA301	30UJA15005	H	H	SII	NS-AQ	C/NM	Y (4)	Y (5)
RPV O-ring Leakoff Press Iso Vlv	30JAA10AA302	30UJA15005	H	H	SII	NS-AQ	C/NM	Y (4)	Y (5)
RPV High Point Vent Vlv #1	30JAA10AA501	30UJA18019	H	H	SI	S	C/NM	Y (4)	Y (5)
RPV High Point Vent Vlv #2	30JAA10AA502	30UJA18019	H	H	SI	S	C/NM	Y (4)	Y (5)
RPV High Point Vent Vlv #3	30JAA10AA506	30UJA18019	H	H	SII	NS-AQ	C/NM	Y (4)	Y (5)
RPV High Point Vent Vlv #4	30JAA10AA505	30UJA18019	H	H	SII	NS-AQ	C/NM	Y (4)	Y (5)
RPV High Point Vent Vlv #5	30JAA10AA507	30UJA18019	H	H	SII	NS-AQ	C/NM	Y (4)	Y (5)
RPV High Point Vent Vlv #6	30JAA10AA503	30UJA18019	H	H	SII	NS-AQ	C/NM	Y (4)	Y (5)
RPV High Point Vent Vlv #7	30JAA10AA504	30UJA18019	H	H	SII	NS-AQ	C/NM	Y (4)	Y (5)
Post Acc RPV High Pt Vent Vlv #1	30JAA10AA508	30UJA18019	H	H	SI	S	C/NM	Y (4)	Y (5)
Post Acc RPV High Pt Vent Vlv #2	30JAA10AA509	30UJA18019	H	H	SI	S	C/NM	Y (4)	Y (5)
Post Acc RPV High Pt Vent Vlv #3	30JAA10AA510	30UJA18019	H	H	SI	S	C/NM	Y (4)	Y (5)
Post Acc RPV High Pt Vent Vlv #4	30JAA10AA511	30UJA18019	H	H	SI	S	C/NM	Y (4)	Y (5)
Post Acc High Pt Vent Flow Restrictor	30JAA10BP001	30UJA18019	H	H	SII	NS-AQ			Y (5)
Vlv AA503 Position Sensor (M)	30JAA10CG503B	30UJA18019	H	H	SII	NS-AQ			Y (5)
Vlv AA504 Position Sensor (M)	30JAA10CG504B	30UJA18019	H	H	SII	NS-AQ			Y (5)
Vlv AA505 Position Sensor (M)	30JAA10CG505B	30UJA18019	H	H	SII	NS-AQ			Y (5)
RPV Inner O-Ring Press Sensor (PB)	30JAA10CP050	30UJA15005	H	H	SII	NS-AQ			Y (5)
RPV Inner O-Ring Temp Sensor (PB)	30JAA10CT050	30UJA15005	H	H	SII	NS-AQ			Y (5)
RPV Refueling Cavity Seal	30JAB	30UJA11001	H	H	SI	NS-AQ			Y(5)
CRDMs									
CRDM #1 Latch Mechanism	30JDA01AE	30UJA11001	H	H	SI	S			Y (5)
CRDM #1 Pressure Housing	30JDA01AE	30UJA11001	H	H	SI	S	C/NM	Y (4)	Y (5)
CRDM #1 Position Sensor (M)	30JDA01CG801	30UJA11001	H	H	SI	S			Y (5)
CRDM #1 Top Position Limit Sensor (M)	30JDA01CG802	30UJA11001	H	H	SII	NS-AQ			Y (5)

Table 3.10-1—List of Seismically and Dynamically Qualified Mechanical and Electrical Equipment (Sheet 2 of 197)

Name Tag (Equipment Description)	Tag Number	Local Area KKS ID (Room Location)	EQ Environment (Note 1)	Radiation Environment Zone (Note 2)	EQ Designated Function (Note 3)	Safety Class (Note 4)	EQ Program Designation (Note 5)
CRDM #1 Bottom Position Limit Sensor (M)	30JDA01CG803	30UJA11001	H	H	SI	S	Y (5)
CRDM #1 Temperature Sensor (M)	30JDA01CT801	30UJA11001	H	H	SI	S	Y (5)
CRDM #2 Latch Mechanism	30JDA02AE	30UJA11001	H	H	SI	S	Y (5)
CRDM #2 Pressure Housing	30JDA02AE	30UJA11001	H	H	SI	S C/NM	Y (4) Y (5)
CRDM #2 Position Sensor (M)	30JDA02CG801	30UJA11001	H	H	SI	S	Y (5)
CRDM #2 Top Position Limit Sensor (M)	30JDA02CG802	30UJA11001	H	H	SII	NS-AQ	Y (5)
CRDM #2 Bottom Position Limit Sensor (M)	30JDA02CG803	30UJA11001	H	H	SI	S	Y (5)
CRDM #2 Temperature Sensor (M)	30JDA02CT801	30UJA11001	H	H	SI	S	Y (5)
CRDM #3 Latch Mechanism	30JDA03AE	30UJA11001	H	H	SI	S	Y (5)
CRDM #3 Pressure Housing	30JDA03AE	30UJA11001	H	H	SI	S C/NM	Y (4) Y (5)
CRDM #3 Position Sensor (M)	30JDA03CG801	30UJA11001	H	H	SI	S	Y (5)
CRDM #3 Top Position Limit Sensor (M)	30JDA03CG802	30UJA11001	H	H	SII	NS-AQ	Y (5)
CRDM #3 Bottom Position Limit Sensor (M)	30JDA03CG803	30UJA11001	H	H	SI	S	Y (5)
CRDM #3 Temperature Sensor (M)	30JDA03CT801	30UJA11001	H	H	SI	S	Y (5)
CRDM #4 Latch Mechanism	30JDA04AE	30UJA11001	H	H	SI	S	Y (5)
CRDM #4 Pressure Housing	30JDA04AE	30UJA11001	H	H	SI	S C/NM	Y (4) Y (5)
CRDM #4 Position Sensor (M)	30JDA04CG801	30UJA11001	H	H	SI	S	Y (5)
CRDM #4 Top Position Limit Sensor (M)	30JDA04CG802	30UJA11001	H	H	SII	NS-AQ	Y (5)
CRDM #4 Bottom Position Limit Sensor (M)	30JDA04CG803	30UJA11001	H	H	SI	S	Y (5)
CRDM #4 Temperature Sensor (M)	30JDA04CT801	30UJA11001	H	H	SI	S	Y (5)
CRDM #5 Latch Mechanism	30JDA05AE	30UJA11001	H	H	SI	S	Y (5)
CRDM #5 Pressure Housing	30JDA05AE	30UJA11001	H	H	SI	S C/NM	Y (4) Y (5)
CRDM #5 Position Sensor (M)	30JDA05CG801	30UJA11001	H	H	SI	S	Y (5)
CRDM #5 Top Position Limit Sensor (M)	30JDA05CG802	30UJA11001	H	H	SII	NS-AQ	Y (5)
CRDM #5 Bottom Position Limit Sensor (M)	30JDA05CG803	30UJA11001	H	H	SI	S	Y (5)
CRDM #5 Temperature Sensor (M)	30JDA05CT801	30UJA11001	H	H	SI	S	Y (5)
CRDM #6 Latch Mechanism	30JDA06AE	30UJA11001	H	H	SI	S	Y (5)
CRDM #6 Pressure Housing	30JDA06AE	30UJA11001	H	H	SI	S C/NM	Y (4) Y (5)
CRDM #6 Position Sensor (M)	30JDA06CG801	30UJA11001	H	H	SI	S	Y (5)
CRDM #6 Top Position Limit Sensor (M)	30JDA06CG802	30UJA11001	H	H	SII	NS-AQ	Y (5)
CRDM #6 Bottom Position Limit Sensor (M)	30JDA06CG803	30UJA11001	H	H	SI	S	Y (5)
CRDM #6 Temperature Sensor (M)	30JDA06CT801	30UJA11001	H	H	SI	S	Y (5)
CRDM #7 Latch Mechanism	30JDA07AE	30UJA11001	H	H	SI	S	Y (5)

Table 3.10-1—List of Seismically and Dynamically Qualified Mechanical and Electrical Equipment (Sheet 3 of 197)

Name Tag (Equipment Description)	Tag Number	Local Area KKS ID (Room Location)	EQ Environment (Note 1)	Radiation Environment Zone (Note 2)	EQ Designated Function (Note 3)	Safety Class (Note 4)		EQ Program Designation (Note 5)	
CRDM #7 Pressure Housing	30JDA07AE	30UJA11001	H	H	SI	S	C/NM	Y (4)	Y (5)
CRDM #7 Position Sensor (M)	30JDA07CG801	30UJA11001	H	H	SI	S			Y (5)
CRDM #7 Top Position Limit Sensor (M)	30JDA07CG802	30UJA11001	H	H	SII	NS-AQ			Y (5)
CRDM #7 Bottom Position Limit Sensor (M)	30JDA07CG803	30UJA11001	H	H	SI	S			Y (5)
CRDM #7 Temperature Sensor (M)	30JDA07CT801	30UJA11001	H	H	SI	S			Y (5)
CRDM #8 Latch Mechanism	30JDA08AE	30UJA11001	H	H	SI	S			Y (5)
CRDM #8 Pressure Housing	30JDA08AE	30UJA11001	H	H	SI	S	C/NM	Y (4)	Y (5)
CRDM #8 Position Sensor (M)	30JDA08CG801	30UJA11001	H	H	SI	S			Y (5)
CRDM #8 Top Position Limit Sensor (M)	30JDA08CG802	30UJA11001	H	H	SII	NS-AQ			Y (5)
CRDM #8 Bottom Position Limit Sensor (M)	30JDA08CG803	30UJA11001	H	H	SI	S			Y (5)
CRDM #8 Temperature Sensor (M)	30JDA08CT801	30UJA11001	H	H	SI	S			Y (5)
CRDM #9 Latch Mechanism	30JDA09AE	30UJA11001	H	H	SI	S			Y (5)
CRDM #9 Pressure Housing	30JDA09AE	30UJA11001	H	H	SI	S	C/NM	Y (4)	Y (5)
CRDM #9 Position Sensor (M)	30JDA09CG801	30UJA11001	H	H	SI	S			Y (5)
CRDM #9 Top Position Limit Sensor (M)	30JDA09CG802	30UJA11001	H	H	SII	NS-AQ			Y (5)
CRDM #9 Bottom Position Limit Sensor (M)	30JDA09CG803	30UJA11001	H	H	SI	S			Y (5)
CRDM #9 Temperature Sensor (M)	30JDA09CT801	30UJA11001	H	H	SI	S			Y (5)
CRDM #10 Latch Mechanism	30JDA10AE	30UJA11001	H	H	SI	S			Y (5)
CRDM #10 Pressure Housing	30JDA10AE	30UJA11001	H	H	SI	S	C/NM	Y (4)	Y (5)
CRDM #10 Position Sensor (M)	30JDA10CG801	30UJA11001	H	H	SI	S			Y (5)
CRDM #10 Top Position Limit Sensor (M)	30JDA10CG802	30UJA11001	H	H	SII	NS-AQ			Y (5)
CRDM #10 Bottom Position Limit Sensor (M)	30JDA10CG803	30UJA11001	H	H	SI	S			Y (5)
CRDM #10 Temperature Sensor (M)	30JDA10CT801	30UJA11001	H	H	SI	S			Y (5)
CRDM #11 Latch Mechanism	30JDA11AE	30UJA11001	H	H	SI	S			Y (5)
CRDM #11 Pressure Housing	30JDA11AE	30UJA11001	H	H	SI	S	C/NM	Y (4)	Y (5)
CRDM #11 Position Sensor (M)	30JDA11CG801	30UJA11001	H	H	SI	S			Y (5)
CRDM #11 Top Position Limit Sensor (M)	30JDA11CG802	30UJA11001	H	H	SII	NS-AQ			Y (5)
CRDM #11 Bottom Position Limit Sensor (M)	30JDA11CG803	30UJA11001	H	H	SI	S			Y (5)
CRDM #11 Temperature Sensor (M)	30JDA11CT801	30UJA11001	H	H	SI	S			Y (5)
CRDM #12 Latch Mechanism	30JDA12AE	30UJA11001	H	H	SI	S			Y (5)
CRDM #12 Pressure Housing	30JDA12AE	30UJA11001	H	H	SI	S	C/NM	Y (4)	Y (5)
CRDM #12 Position Sensor (M)	30JDA12CG801	30UJA11001	H	H	SI	S			Y (5)
CRDM #12 Top Position Limit Sensor (M)	30JDA12CG802	30UJA11001	H	H	SII	NS-AQ			Y (5)

Table 3.10-1—List of Seismically and Dynamically Qualified Mechanical and Electrical Equipment (Sheet 4 of 197)

Name Tag (Equipment Description)	Tag Number	Local Area KKS ID (Room Location)	EQ Environment (Note 1)	Radiation Environment Zone (Note 2)	EQ Designated Function (Note 3)	Safety Class (Note 4)	EQ Program Designation (Note 5)
CRDM #12 Bottom Position Limit Sensor (M)	30JDA12CG803	30UJA11001	H	H	SI	S	Y (5)
CRDM #12 Temperature Sensor (M)	30JDA12CT801	30UJA11001	H	H	SI	S	Y (5)
CRDM #13 Latch Mechanism	30JDA13AE	30UJA11001	H	H	SI	S	Y (5)
CRDM #13 Pressure Housing	30JDA13AE	30UJA11001	H	H	SI	S C/NM	Y (4) Y (5)
CRDM #13 Position Sensor (M)	30JDA13CG801	30UJA11001	H	H	SI	S	Y (5)
CRDM #13 Top Position Limit Sensor (M)	30JDA13CG802	30UJA11001	H	H	SII	NS-AQ	Y (5)
CRDM #13 Bottom Position Limit Sensor (M)	30JDA13CG803	30UJA11001	H	H	SI	S	Y (5)
CRDM #13 Temperature Sensor (M)	30JDA13CT801	30UJA11001	H	H	SI	S	Y (5)
CRDM #14 Latch Mechanism	30JDA14AE	30UJA11001	H	H	SI	S	Y (5)
CRDM #14 Pressure Housing	30JDA14AE	30UJA11001	H	H	SI	S C/NM	Y (4) Y (5)
CRDM #14 Position Sensor (M)	30JDA14CG801	30UJA11001	H	H	SI	S	Y (5)
CRDM #14 Top Position Limit Sensor (M)	30JDA14CG802	30UJA11001	H	H	SII	NS-AQ	Y (5)
CRDM #14 Bottom Position Limit Sensor (M)	30JDA14CG803	30UJA11001	H	H	SI	S	Y (5)
CRDM #14 Temperature Sensor (M)	30JDA14CT801	30UJA11001	H	H	SI	S	Y (5)
CRDM #15 Latch Mechanism	30JDA15AE	30UJA11001	H	H	SI	S	Y (5)
CRDM #15 Pressure Housing	30JDA15AE	30UJA11001	H	H	SI	S C/NM	Y (4) Y (5)
CRDM #15 Position Sensor (M)	30JDA15CG801	30UJA11001	H	H	SI	S	Y (5)
CRDM #15 Top Position Limit Sensor (M)	30JDA15CG802	30UJA11001	H	H	SII	NS-AQ	Y (5)
CRDM #15 Bottom Position Limit Sensor (M)	30JDA15CG803	30UJA11001	H	H	SI	S	Y (5)
CRDM #15 Temperature Sensor (M)	30JDA15CT801	30UJA11001	H	H	SI	S	Y (5)
CRDM #16 Latch Mechanism	30JDA16AE	30UJA11001	H	H	SI	S	Y (5)
CRDM #16 Pressure Housing	30JDA16AE	30UJA11001	H	H	SI	S C/NM	Y (4) Y (5)
CRDM #16 Position Sensor (M)	30JDA16CG801	30UJA11001	H	H	SI	S	Y (5)
CRDM #16 Top Position Limit Sensor (M)	30JDA16CG802	30UJA11001	H	H	SII	NS-AQ	Y (5)
CRDM #16 Bottom Position Limit Sensor (M)	30JDA16CG803	30UJA11001	H	H	SI	S	Y (5)
CRDM #16 Temperature Sensor (M)	30JDA16CT801	30UJA11001	H	H	SI	S	Y (5)
CRDM #17 Latch Mechanism	30JDA17AE	30UJA11001	H	H	SI	S	Y (5)
CRDM #17 Pressure Housing	30JDA17AE	30UJA11001	H	H	SI	S C/NM	Y (4) Y (5)
CRDM #17 Position Sensor (M)	30JDA17CG801	30UJA11001	H	H	SI	S	Y (5)
CRDM #17 Top Position Limit Sensor (M)	30JDA17CG802	30UJA11001	H	H	SII	NS-AQ	Y (5)
CRDM #17 Bottom Position Limit Sensor (M)	30JDA17CG803	30UJA11001	H	H	SI	S	Y (5)
CRDM #17 Temperature Sensor (M)	30JDA17CT801	30UJA11001	H	H	SI	S	Y (5)
CRDM #18 Latch Mechanism	30JDA18AE	30UJA11001	H	H	SI	S	Y (5)

Table 3.10-1—List of Seismically and Dynamically Qualified Mechanical and Electrical Equipment (Sheet 5 of 197)

Name Tag (Equipment Description)	Tag Number	Local Area KKS ID (Room Location)	EQ Environment (Note 1)	Radiation Environment Zone (Note 2)	EQ Designated Function (Note 3)	Safety Class (Note 4)		EQ Program Designation (Note 5)	
CRDM #18 Pressure Housing	30JDA18AE	30UJA11001	H	H	SI	S	C/NM	Y (4)	Y (5)
CRDM #18 Position Sensor (M)	30JDA18CG801	30UJA11001	H	H	SI	S			Y (5)
CRDM #18 Top Position Limit Sensor (M)	30JDA18CG802	30UJA11001	H	H	SII	NS-AQ			Y (5)
CRDM #18 Bottom Position Limit Sensor (M)	30JDA18CG803	30UJA11001	H	H	SI	S			Y (5)
CRDM #18 Temperature Sensor (M)	30JDA18CT801	30UJA11001	H	H	SI	S			Y (5)
CRDM #19 Latch Mechanism	30JDA19AE	30UJA11001	H	H	SI	S			Y (5)
CRDM #19 Pressure Housing	30JDA19AE	30UJA11001	H	H	SI	S	C/NM	Y (4)	Y (5)
CRDM #19 Position Sensor (M)	30JDA19CG801	30UJA11001	H	H	SI	S			Y (5)
CRDM #19 Top Position Limit Sensor (M)	30JDA19CG802	30UJA11001	H	H	SII	NS-AQ			Y (5)
CRDM #19 Bottom Position Limit Sensor (M)	30JDA19CG803	30UJA11001	H	H	SI	S			Y (5)
CRDM #19 Temperature Sensor (M)	30JDA19CT801	30UJA11001	H	H	SI	S			Y (5)
CRDM #20 Latch Mechanism	30JDA20AE	30UJA11001	H	H	SI	S			Y (5)
CRDM #20 Pressure Housing	30JDA20AE	30UJA11001	H	H	SI	S	C/NM	Y (4)	Y (5)
CRDM #20 Position Sensor (M)	30JDA20CG801	30UJA11001	H	H	SI	S			Y (5)
CRDM #20 Top Position Limit Sensor (M)	30JDA20CG802	30UJA11001	H	H	SII	NS-AQ			Y (5)
CRDM #20 Bottom Position Limit Sensor (M)	30JDA20CG803	30UJA11001	H	H	SI	S			Y (5)
CRDM #20 Temperature Sensor (M)	30JDA20CT801	30UJA11001	H	H	SI	S			Y (5)
CRDM #21 Latch Mechanism	30JDA21AE	30UJA11001	H	H	SI	S			Y (5)
CRDM #21 Pressure Housing	30JDA21AE	30UJA11001	H	H	SI	S	C/NM	Y (4)	Y (5)
CRDM #21 Position Sensor (M)	30JDA21CG801	30UJA11001	H	H	SI	S			Y (5)
CRDM #21 Top Position Limit Sensor (M)	30JDA21CG802	30UJA11001	H	H	SII	NS-AQ			Y (5)
CRDM #21 Bottom Position Limit Sensor (M)	30JDA21CG803	30UJA11001	H	H	SI	S			Y (5)
CRDM #21 Temperature Sensor (M)	30JDA21CT801	30UJA11001	H	H	SI	S			Y (5)
CRDM #22 Latch Mechanism	30JDA22AE	30UJA11001	H	H	SI	S			Y (5)
CRDM #22 Pressure Housing	30JDA22AE	30UJA11001	H	H	SI	S	C/NM	Y (4)	Y (5)
CRDM #22 Position Sensor (M)	30JDA22CG801	30UJA11001	H	H	SI	S			Y (5)
CRDM #22 Top Position Limit Sensor (M)	30JDA22CG802	30UJA11001	H	H	SII	NS-AQ			Y (5)
CRDM #22 Bottom Position Limit Sensor (M)	30JDA22CG803	30UJA11001	H	H	SI	S			Y (5)
CRDM #22 Temperature Sensor (M)	30JDA22CT801	30UJA11001	H	H	SI	S			Y (5)
CRDM #26 Latch Mechanism	30JDA26AE	30UJA11001	H	H	SI	S			Y (5)
CRDM #26 Pressure Housing	30JDA26AE	30UJA11001	H	H	SI	S	C/NM	Y (4)	Y (5)
CRDM #26 Position Sensor (M)	30JDA26CG801	30UJA11001	H	H	SI	S			Y (5)
CRDM #26 Top Position Limit Sensor (M)	30JDA26CG802	30UJA11001	H	H	SII	NS-AQ			Y (5)

Table 3.10-1—List of Seismically and Dynamically Qualified Mechanical and Electrical Equipment (Sheet 6 of 197)

Name Tag (Equipment Description)	Tag Number	Local Area KKS ID (Room Location)	EQ Environment (Note 1)	Radiation Environment Zone (Note 2)	EQ Designated Function (Note 3)	Safety Class (Note 4)	EQ Program Designation (Note 5)
CRDM #26 Bottom Position Limit Sensor (M)	30JDA26CG803	30UJA11001	H	H	SI	S	Y (5)
CRDM #26 Temperature Sensor (M)	30JDA26CT801	30UJA11001	H	H	SI	S	Y (5)
CRDM #27 Latch Mechanism	30JDA27AE	30UJA11001	H	H	SI	S	Y (5)
CRDM #27 Pressure Housing	30JDA27AE	30UJA11001	H	H	SI	S C/NM	Y (4) Y (5)
CRDM #27 Position Sensor (M)	30JDA27CG801	30UJA11001	H	H	SI	S	Y (5)
CRDM #27 Top Position Limit Sensor (M)	30JDA27CG802	30UJA11001	H	H	SII	NS-AQ	Y (5)
CRDM #27 Bottom Position Limit Sensor (M)	30JDA27CG803	30UJA11001	H	H	SI	S	Y (5)
CRDM #27 Temperature Sensor (M)	30JDA27CT801	30UJA11001	H	H	SI	S	Y (5)
CRDM #28 Latch Mechanism	30JDA28AE	30UJA11001	H	H	SI	S	Y (5)
CRDM #28 Pressure Housing	30JDA28AE	30UJA11001	H	H	SI	S C/NM	Y (4) Y (5)
CRDM #28 Position Sensor (M)	30JDA28CG801	30UJA11001	H	H	SI	S	Y (5)
CRDM #28 Top Position Limit Sensor (M)	30JDA28CG802	30UJA11001	H	H	SII	NS-AQ	Y (5)
CRDM #28 Bottom Position Limit Sensor (M)	30JDA28CG803	30UJA11001	H	H	SI	S	Y (5)
CRDM #28 Temperature Sensor (M)	30JDA28CT801	30UJA11001	H	H	SI	S	Y (5)
CRDM #29 Latch Mechanism	30JDA29AE	30UJA11001	H	H	SI	S	Y (5)
CRDM #29 Pressure Housing	30JDA29AE	30UJA11001	H	H	SI	S C/NM	Y (4) Y (5)
CRDM #29 Position Sensor (M)	30JDA29CG801	30UJA11001	H	H	SI	S	Y (5)
CRDM #29 Top Position Limit Sensor (M)	30JDA29CG802	30UJA11001	H	H	SII	NS-AQ	Y (5)
CRDM #29 Bottom Position Limit Sensor (M)	30JDA29CG803	30UJA11001	H	H	SI	S	Y (5)
CRDM #29 Temperature Sensor (M)	30JDA29CT801	30UJA11001	H	H	SI	S	Y (5)
CRDM #30 Latch Mechanism	30JDA30AE	30UJA11001	H	H	SI	S	Y (5)
CRDM #30 Pressure Housing	30JDA30AE	30UJA11001	H	H	SI	S C/NM	Y (4) Y (5)
CRDM #30 Position Sensor (M)	30JDA30CG801	30UJA11001	H	H	SI	S	Y (5)
CRDM #30 Top Position Limit Sensor (M)	30JDA30CG802	30UJA11001	H	H	SII	NS-AQ	Y (5)
CRDM #30 Bottom Position Limit Sensor (M)	30JDA30CG803	30UJA11001	H	H	SI	S	Y (5)
CRDM #30 Temperature Sensor (M)	30JDA30CT801	30UJA11001	H	H	SI	S	Y (5)
CRDM #31 Latch Mechanism	30JDA31AE	30UJA11001	H	H	SI	S	Y (5)
CRDM #31 Pressure Housing	30JDA31AE	30UJA11001	H	H	SI	S C/NM	Y (4) Y (5)
CRDM #31 Position Sensor (M)	30JDA31CG801	30UJA11001	H	H	SI	S	Y (5)
CRDM #31 Top Position Limit Sensor (M)	30JDA31CG802	30UJA11001	H	H	SII	NS-AQ	Y (5)
CRDM #31 Bottom Position Limit Sensor (M)	30JDA31CG803	30UJA11001	H	H	SI	S	Y (5)
CRDM #31 Temperature Sensor (M)	30JDA31CT801	30UJA11001	H	H	SI	S	Y (5)
CRDM #32 Latch Mechanism	30JDA32AE	30UJA11001	H	H	SI	S	Y (5)

Table 3.10-1—List of Seismically and Dynamically Qualified Mechanical and Electrical Equipment (Sheet 7 of 197)

Name Tag (Equipment Description)	Tag Number	Local Area KKS ID (Room Location)	EQ Environment (Note 1)	Radiation Environment Zone (Note 2)	EQ Designated Function (Note 3)	Safety Class (Note 4)		EQ Program Designation (Note 5)	
CRDM #32 Pressure Housing	30JDA32AE	30UJA11001	H	H	SI	S	C/NM	Y (4)	Y (5)
CRDM #32 Position Sensor (M)	30JDA32CG801	30UJA11001	H	H	SI	S			Y (5)
CRDM #32 Top Position Limit Sensor (M)	30JDA32CG802	30UJA11001	H	H	SII	NS-AQ			Y (5)
CRDM #32 Bottom Position Limit Sensor (M)	30JDA32CG803	30UJA11001	H	H	SI	S			Y (5)
CRDM #32 Temperature Sensor (M)	30JDA32CT801	30UJA11001	H	H	SI	S			Y (5)
CRDM #33 Latch Mechanism	30JDA33AE	30UJA11001	H	H	SI	S			Y (5)
CRDM #33 Pressure Housing	30JDA33AE	30UJA11001	H	H	SI	S	C/NM	Y (4)	Y (5)
CRDM #33 Position Sensor (M)	30JDA33CG801	30UJA11001	H	H	SI	S			Y (5)
CRDM #33 Top Position Limit Sensor (M)	30JDA33CG802	30UJA11001	H	H	SII	NS-AQ			Y (5)
CRDM #33 Bottom Position Limit Sensor (M)	30JDA33CG803	30UJA11001	H	H	SI	S			Y (5)
CRDM #33 Temperature Sensor (M)	30JDA33CT801	30UJA11001	H	H	SI	S			Y (5)
CRDM #34 Latch Mechanism	30JDA34AE	30UJA11001	H	H	SI	S			Y (5)
CRDM #34 Pressure Housing	30JDA34AE	30UJA11001	H	H	SI	S	C/NM	Y (4)	Y (5)
CRDM #34 Position Sensor (M)	30JDA34CG801	30UJA11001	H	H	SI	S			Y (5)
CRDM #34 Top Position Limit Sensor (M)	30JDA34CG802	30UJA11001	H	H	SII	NS-AQ			Y (5)
CRDM #34 Bottom Position Limit Sensor (M)	30JDA34CG803	30UJA11001	H	H	SI	S			Y (5)
CRDM #34 Temperature Sensor (M)	30JDA34CT801	30UJA11001	H	H	SI	S			Y (5)
CRDM #35 Latch Mechanism	30JDA35AE	30UJA11001	H	H	SI	S			Y (5)
CRDM #35 Pressure Housing	30JDA35AE	30UJA11001	H	H	SI	S	C/NM	Y (4)	Y (5)
CRDM #35 Position Sensor (M)	30JDA35CG801	30UJA11001	H	H	SI	S			Y (5)
CRDM #35 Top Position Limit Sensor (M)	30JDA35CG802	30UJA11001	H	H	SII	NS-AQ			Y (5)
CRDM #35 Bottom Position Limit Sensor (M)	30JDA35CG803	30UJA11001	H	H	SI	S			Y (5)
CRDM #35 Temperature Sensor (M)	30JDA35CT801	30UJA11001	H	H	SI	S			Y (5)
CRDM #36 Latch Mechanism	30JDA36AE	30UJA11001	H	H	SI	S			Y (5)
CRDM #36 Pressure Housing	30JDA36AE	30UJA11001	H	H	SI	S	C/NM	Y (4)	Y (5)
CRDM #36 Position Sensor (M)	30JDA36CG801	30UJA11001	H	H	SI	S			Y (5)
CRDM #36 Top Position Limit Sensor (M)	30JDA36CG802	30UJA11001	H	H	SII	NS-AQ			Y (5)
CRDM #36 Bottom Position Limit Sensor (M)	30JDA36CG803	30UJA11001	H	H	SI	S			Y (5)
CRDM #36 Temperature Sensor (M)	30JDA36CT801	30UJA11001	H	H	SI	S			Y (5)
CRDM #37 Latch Mechanism	30JDA37AE	30UJA11001	H	H	SI	S			Y (5)
CRDM #37 Pressure Housing	30JDA37AE	30UJA11001	H	H	SI	S	C/NM	Y (4)	Y (5)
CRDM #37 Position Sensor (M)	30JDA37CG801	30UJA11001	H	H	SI	S			Y (5)
CRDM #37 Top Position Limit Sensor (M)	30JDA37CG802	30UJA11001	H	H	SII	NS-AQ			Y (5)

Table 3.10-1—List of Seismically and Dynamically Qualified Mechanical and Electrical Equipment (Sheet 8 of 197)

Name Tag (Equipment Description)	Tag Number	Local Area KKS ID (Room Location)	EQ Environment (Note 1)	Radiation Environment Zone (Note 2)	EQ Designated Function (Note 3)	Safety Class (Note 4)	EQ Program Designation (Note 5)
CRDM #37 Bottom Position Limit Sensor (M)	30JDA37CG803	30UJA11001	H	H	SI	S	Y (5)
CRDM #37 Temperature Sensor (M)	30JDA37CT801	30UJA11001	H	H	SI	S	Y (5)
CRDM #38 Latch Mechanism	30JDA38AE	30UJA11001	H	H	SI	S	Y (5)
CRDM #38 Pressure Housing	30JDA38AE	30UJA11001	H	H	SI	S C/NM	Y (4) Y (5)
CRDM #38 Position Sensor (M)	30JDA38CG801	30UJA11001	H	H	SI	S	Y (5)
CRDM #38 Top Position Limit Sensor (M)	30JDA38CG802	30UJA11001	H	H	SII	NS-AQ	Y (5)
CRDM #38 Bottom Position Limit Sensor (M)	30JDA38CG803	30UJA11001	H	H	SI	S	Y (5)
CRDM #38 Temperature Sensor (M)	30JDA38CT801	30UJA11001	H	H	SI	S	Y (5)
CRDM #39 Latch Mechanism	30JDA39AE	30UJA11001	H	H	SI	S	Y (5)
CRDM #39 Pressure Housing	30JDA39AE	30UJA11001	H	H	SI	S C/NM	Y (4) Y (5)
CRDM #39 Position Sensor (M)	30JDA39CG801	30UJA11001	H	H	SI	S	Y (5)
CRDM #39 Top Position Limit Sensor (M)	30JDA39CG802	30UJA11001	H	H	SII	NS-AQ	Y (5)
CRDM #39 Bottom Position Limit Sensor (M)	30JDA39CG803	30UJA11001	H	H	SI	S	Y (5)
CRDM #39 Temperature Sensor (M)	30JDA39CT801	30UJA11001	H	H	SI	S	Y (5)
CRDM #40 Latch Mechanism	30JDA40AE	30UJA11001	H	H	SI	S	Y (5)
CRDM #40 Pressure Housing	30JDA40AE	30UJA11001	H	H	SI	S C/NM	Y (4) Y (5)
CRDM #40 Position Sensor (M)	30JDA40CG801	30UJA11001	H	H	SI	S	Y (5)
CRDM #40 Top Position Limit Sensor (M)	30JDA40CG802	30UJA11001	H	H	SII	NS-AQ	Y (5)
CRDM #40 Bottom Position Limit Sensor (M)	30JDA40CG803	30UJA11001	H	H	SI	S	Y (5)
CRDM #40 Temperature Sensor (M)	30JDA40CT801	30UJA11001	H	H	SI	S	Y (5)
CRDM #41 Latch Mechanism	30JDA41AE	30UJA11001	H	H	SI	S	Y (5)
CRDM #41 Pressure Housing	30JDA41AE	30UJA11001	H	H	SI	S C/NM	Y (4) Y (5)
CRDM #41 Position Sensor (M)	30JDA41CG801	30UJA11001	H	H	SI	S	Y (5)
CRDM #41 Top Position Limit Sensor (M)	30JDA41CG802	30UJA11001	H	H	SII	NS-AQ	Y (5)
CRDM #41 Bottom Position Limit Sensor (M)	30JDA41CG803	30UJA11001	H	H	SI	S	Y (5)
CRDM #41 Temperature Sensor (M)	30JDA41CT801	30UJA11001	H	H	SI	S	Y (5)
CRDM #42 Latch Mechanism	30JDA42AE	30UJA11001	H	H	SI	S	Y (5)
CRDM #42 Pressure Housing	30JDA42AE	30UJA11001	H	H	SI	S C/NM	Y (4) Y (5)
CRDM #42 Position Sensor (M)	30JDA42CG801	30UJA11001	H	H	SI	S	Y (5)
CRDM #42 Top Position Limit Sensor (M)	30JDA42CG802	30UJA11001	H	H	SII	NS-AQ	Y (5)
CRDM #42 Bottom Position Limit Sensor (M)	30JDA42CG803	30UJA11001	H	H	SI	S	Y (5)
CRDM #42 Temperature Sensor (M)	30JDA42CT801	30UJA11001	H	H	SI	S	Y (5)
CRDM #43 Latch Mechanism	30JDA43AE	30UJA11001	H	H	SI	S	Y (5)

Table 3.10-1—List of Seismically and Dynamically Qualified Mechanical and Electrical Equipment (Sheet 9 of 197)

Name Tag (Equipment Description)	Tag Number	Local Area KKS ID (Room Location)	EQ Environment (Note 1)	Radiation Environment Zone (Note 2)	EQ Designated Function (Note 3)	Safety Class (Note 4)		EQ Program Designation (Note 5)	
CRDM #43 Pressure Housing	30JDA43AE	30UJA11001	H	H	SI	S	C/NM	Y (4)	Y (5)
CRDM #43 Position Sensor (M)	30JDA43CG801	30UJA11001	H	H	SI	S			Y (5)
CRDM #43 Top Position Limit Sensor (M)	30JDA43CG802	30UJA11001	H	H	SII	NS-AQ			Y (5)
CRDM #43 Bottom Position Limit Sensor (M)	30JDA43CG803	30UJA11001	H	H	SI	S			Y (5)
CRDM #43 Temperature Sensor (M)	30JDA43CT801	30UJA11001	H	H	SI	S			Y (5)
CRDM #44 Latch Mechanism	30JDA44AE	30UJA11001	H	H	SI	S			Y (5)
CRDM #44 Pressure Housing	30JDA44AE	30UJA11001	H	H	SI	S	C/NM	Y (4)	Y (5)
CRDM #44 Position Sensor (M)	30JDA44CG801	30UJA11001	H	H	SI	S			Y (5)
CRDM #44 Top Position Limit Sensor (M)	30JDA44CG802	30UJA11001	H	H	SII	NS-AQ			Y (5)
CRDM #44 Bottom Position Limit Sensor (M)	30JDA44CG803	30UJA11001	H	H	SI	S			Y (5)
CRDM #44 Temperature Sensor (M)	30JDA44CT801	30UJA11001	H	H	SI	S			Y (5)
CRDM #45 Latch Mechanism	30JDA45AE	30UJA11001	H	H	SI	S			Y (5)
CRDM #45 Pressure Housing	30JDA45AE	30UJA11001	H	H	SI	S	C/NM	Y (4)	Y (5)
CRDM #45 Position Sensor (M)	30JDA45CG801	30UJA11001	H	H	SI	S			Y (5)
CRDM #45 Top Position Limit Sensor (M)	30JDA45CG802	30UJA11001	H	H	SII	NS-AQ			Y (5)
CRDM #45 Bottom Position Limit Sensor (M)	30JDA45CG803	30UJA11001	H	H	SI	S			Y (5)
CRDM #45 Temperature Sensor (M)	30JDA45CT801	30UJA11001	H	H	SI	S			Y (5)
CRDM #46 Latch Mechanism	30JDA46AE	30UJA11001	H	H	SI	S			Y (5)
CRDM #46 Pressure Housing	30JDA46AE	30UJA11001	H	H	SI	S	C/NM	Y (4)	Y (5)
CRDM #46 Position Sensor (M)	30JDA46CG801	30UJA11001	H	H	SI	S			Y (5)
CRDM #46 Top Position Limit Sensor (M)	30JDA46CG802	30UJA11001	H	H	SII	NS-AQ			Y (5)
CRDM #46 Bottom Position Limit Sensor (M)	30JDA46CG803	30UJA11001	H	H	SI	S			Y (5)
CRDM #46 Temperature Sensor (M)	30JDA46CT801	30UJA11001	H	H	SI	S			Y (5)
CRDM #47 Latch Mechanism	30JDA47AE	30UJA11001	H	H	SI	S			Y (5)
CRDM #47 Pressure Housing	30JDA47AE	30UJA11001	H	H	SI	S	C/NM	Y (4)	Y (5)
CRDM #47 Position Sensor (M)	30JDA47CG801	30UJA11001	H	H	SI	S			Y (5)
CRDM #47 Top Position Limit Sensor (M)	30JDA47CG802	30UJA11001	H	H	SII	NS-AQ			Y (5)
CRDM #47 Bottom Position Limit Sensor (M)	30JDA47CG803	30UJA11001	H	H	SI	S			Y (5)
CRDM #47 Temperature Sensor (M)	30JDA47CT801	30UJA11001	H	H	SI	S			Y (5)
CRDM #51 Latch Mechanism	30JDA51AE	30UJA11001	H	H	SI	S			Y (5)
CRDM #51 Pressure Housing	30JDA51AE	30UJA11001	H	H	SI	S	C/NM	Y (4)	Y (5)
CRDM #51 Position Sensor (M)	30JDA51CG801	30UJA11001	H	H	SI	S			Y (5)
CRDM #51 Top Position Limit Sensor (M)	30JDA51CG802	30UJA11001	H	H	SII	NS-AQ			Y (5)

Table 3.10-1—List of Seismically and Dynamically Qualified Mechanical and Electrical Equipment (Sheet 10 of 197)

Name Tag (Equipment Description)	Tag Number	Local Area KKS ID (Room Location)	EQ Environment (Note 1)	Radiation Environment Zone (Note 2)	EQ Designated Function (Note 3)	Safety Class (Note 4)	EQ Program Designation (Note 5)
CRDM #51 Bottom Position Limit Sensor (M)	30JDA51CG803	30UJA11001	H	H	SI	S	Y (5)
CRDM #51 Temperature Sensor (M)	30JDA51CT801	30UJA11001	H	H	SI	S	Y (5)
CRDM #52 Latch Mechanism	30JDA52AE	30UJA11001	H	H	SI	S	Y (5)
CRDM #52 Pressure Housing	30JDA52AE	30UJA11001	H	H	SI	S C/NM	Y (4) Y (5)
CRDM #52 Position Sensor (M)	30JDA52CG801	30UJA11001	H	H	SI	S	Y (5)
CRDM #52 Top Position Limit Sensor (M)	30JDA52CG802	30UJA11001	H	H	SII	NS-AQ	Y (5)
CRDM #52 Bottom Position Limit Sensor (M)	30JDA52CG803	30UJA11001	H	H	SI	S	Y (5)
CRDM #52 Temperature Sensor (M)	30JDA52CT801	30UJA11001	H	H	SI	S	Y (5)
CRDM #53 Latch Mechanism	30JDA53AE	30UJA11001	H	H	SI	S	Y (5)
CRDM #53 Pressure Housing	30JDA53AE	30UJA11001	H	H	SI	S C/NM	Y (4) Y (5)
CRDM #53 Position Sensor (M)	30JDA53CG801	30UJA11001	H	H	SI	S	Y (5)
CRDM #53 Top Position Limit Sensor (M)	30JDA53CG802	30UJA11001	H	H	SII	NS-AQ	Y (5)
CRDM #53 Bottom Position Limit Sensor (M)	30JDA53CG803	30UJA11001	H	H	SI	S	Y (5)
CRDM #53 Temperature Sensor (M)	30JDA53CT801	30UJA11001	H	H	SI	S	Y (5)
CRDM #54 Latch Mechanism	30JDA54AE	30UJA11001	H	H	SI	S	Y (5)
CRDM #54 Pressure Housing	30JDA54AE	30UJA11001	H	H	SI	S C/NM	Y (4) Y (5)
CRDM #54 Position Sensor (M)	30JDA54CG801	30UJA11001	H	H	SI	S	Y (5)
CRDM #54 Top Position Limit Sensor (M)	30JDA54CG802	30UJA11001	H	H	SII	NS-AQ	Y (5)
CRDM #54 Bottom Position Limit Sensor (M)	30JDA54CG803	30UJA11001	H	H	SI	S	Y (5)
CRDM #54 Temperature Sensor (M)	30JDA54CT801	30UJA11001	H	H	SI	S	Y (5)
CRDM #55 Latch Mechanism	30JDA55AE	30UJA11001	H	H	SI	S	Y (5)
CRDM #55 Pressure Housing	30JDA55AE	30UJA11001	H	H	SI	S C/NM	Y (4) Y (5)
CRDM #55 Position Sensor (M)	30JDA55CG801	30UJA11001	H	H	SI	S	Y (5)
CRDM #55 Top Position Limit Sensor (M)	30JDA55CG802	30UJA11001	H	H	SII	NS-AQ	Y (5)
CRDM #55 Bottom Position Limit Sensor (M)	30JDA55CG803	30UJA11001	H	H	SI	S	Y (5)
CRDM #55 Temperature Sensor (M)	30JDA55CT801	30UJA11001	H	H	SI	S	Y (5)
CRDM #56 Latch Mechanism	30JDA56AE	30UJA11001	H	H	SI	S	Y (5)
CRDM #56 Pressure Housing	30JDA56AE	30UJA11001	H	H	SI	S C/NM	Y (4) Y (5)
CRDM #56 Position Sensor (M)	30JDA56CG801	30UJA11001	H	H	SI	S	Y (5)
CRDM #56 Top Position Limit Sensor (M)	30JDA56CG802	30UJA11001	H	H	SII	NS-AQ	Y (5)
CRDM #56 Bottom Position Limit Sensor (M)	30JDA56CG803	30UJA11001	H	H	SI	S	Y (5)
CRDM #56 Temperature Sensor (M)	30JDA56CT801	30UJA11001	H	H	SI	S	Y (5)
CRDM #57 Latch Mechanism	30JDA57AE	30UJA11001	H	H	SI	S	Y (5)

Table 3.10-1—List of Seismically and Dynamically Qualified Mechanical and Electrical Equipment (Sheet 11 of 197)

Name Tag (Equipment Description)	Tag Number	Local Area KKS ID (Room Location)	EQ Environment (Note 1)	Radiation Environment Zone (Note 2)	EQ Designated Function (Note 3)	Safety Class (Note 4)	EQ Program Designation (Note 5)
CRDM #57 Pressure Housing	30JDA57AE	30UJA11001	H	H	SI	S C/NM	Y (4) Y (5)
CRDM #57 Position Sensor (M)	30JDA57CG801	30UJA11001	H	H	SI	S	Y (5)
CRDM #57 Top Position Limit Sensor (M)	30JDA57CG802	30UJA11001	H	H	SII	NS-AQ	Y (5)
CRDM #57 Bottom Position Limit Sensor (M)	30JDA57CG803	30UJA11001	H	H	SI	S	Y (5)
CRDM #57 Temperature Sensor (PB)	30JDA57CT801	30UJA11001	H	H	SI	S	Y (5)
CRDM #58 Latch Mechanism	30JDA58AE	30UJA11001	H	H	SI	S	Y (5)
CRDM #58 Pressure Housing	30JDA58AE	30UJA11001	H	H	SI	S C/NM	Y (4) Y (5)
CRDM #58 Position Sensor (M)	30JDA58CG801	30UJA11001	H	H	SI	S	Y (5)
CRDM #58 Top Position Limit Sensor (M)	30JDA58CG802	30UJA11001	H	H	SII	NS-AQ	Y (5)
CRDM #58 Bottom Position Limit Sensor (M)	30JDA58CG803	30UJA11001	H	H	SI	S	Y (5)
CRDM #58 Temperature Sensor (PB)	30JDA58CT801	30UJA11001	H	H	SI	S	Y (5)
CRDM #59 Latch Mechanism	30JDA59AE	30UJA11001	H	H	SI	S	Y (5)
CRDM #59 Pressure Housing	30JDA59AE	30UJA11001	H	H	SI	S C/NM	Y (4) Y (5)
CRDM #59 Position Sensor (M)	30JDA59CG801	30UJA11001	H	H	SI	S	Y (5)
CRDM #59 Top Position Limit Sensor (M)	30JDA59CG802	30UJA11001	H	H	SII	NS-AQ	Y (5)
CRDM #59 Bottom Position Limit Sensor (M)	30JDA59CG803	30UJA11001	H	H	SI	S	Y (5)
CRDM #59 Temperature Sensor (M)	30JDA59CT801	30UJA11001	H	H	SI	S	Y (5)
CRDM #60 Latch Mechanism	30JDA60AE	30UJA11001	H	H	SI	S	Y (5)
CRDM #60 Pressure Housing	30JDA60AE	30UJA11001	H	H	SI	S C/NM	Y (4) Y (5)
CRDM #60 Position Sensor (M)	30JDA60CG801	30UJA11001	H	H	SI	S	Y (5)
CRDM #60 Top Position Limit Sensor (M)	30JDA60CG802	30UJA11001	H	H	SII	NS-AQ	Y (5)
CRDM #60 Bottom Position Limit Sensor (M)	30JDA60CG803	30UJA11001	H	H	SI	S	Y (5)
CRDM #60 Temperature Sensor (M)	30JDA60CT801	30UJA11001	H	H	SI	S	Y (5)
CRDM #61 Latch Mechanism	30JDA61AE	30UJA11001	H	H	SI	S	Y (5)
CRDM #61 Pressure Housing	30JDA61AE	30UJA11001	H	H	SI	S C/NM	Y (4) Y (5)
CRDM #61 Position Sensor (M)	30JDA61CG801	30UJA11001	H	H	SI	S	Y (5)
CRDM #61 Top Position Limit Sensor (M)	30JDA61CG802	30UJA11001	H	H	SII	NS-AQ	Y (5)
CRDM #61 Bottom Position Limit Sensor (M)	30JDA61CG803	30UJA11001	H	H	SI	S	Y (5)
CRDM #61 Temperature Sensor (M)	30JDA61CT801	30UJA11001	H	H	SI	S	Y (5)
CRDM #62 Latch Mechanism	30JDA62AE	30UJA11001	H	H	SI	S	Y (5)
CRDM #62 Pressure Housing	30JDA62AE	30UJA11001	H	H	SI	S C/NM	Y (4) Y (5)
CRDM #62 Position Sensor (M)	30JDA62CG801	30UJA11001	H	H	SI	S	Y (5)
CRDM #62 Top Position Limit Sensor (M)	30JDA62CG802	30UJA11001	H	H	SII	NS-AQ	Y (5)

Table 3.10-1—List of Seismically and Dynamically Qualified Mechanical and Electrical Equipment (Sheet 12 of 197)

Name Tag (Equipment Description)	Tag Number	Local Area KKS ID (Room Location)	EQ Environment (Note 1)	Radiation Environment Zone (Note 2)	EQ Designated Function (Note 3)	Safety Class (Note 4)	EQ Program Designation (Note 5)
CRDM #62 Bottom Position Limit Sensor (M)	30JDA62CG803	30UJA11001	H	H	SI	S	Y (5)
CRDM #62 Temperature Sensor (M)	30JDA62CT801	30UJA11001	H	H	SI	S	Y (5)
CRDM #63 Latch Mechanism	30JDA63AE	30UJA11001	H	H	SI	S	Y (5)
CRDM #63 Pressure Housing	30JDA63AE	30UJA11001	H	H	SI	S C/NM	Y (4) Y (5)
CRDM #63 Position Sensor (M)	30JDA63CG801	30UJA11001	H	H	SI	S	Y (5)
CRDM #63 Top Position Limit Sensor (M)	30JDA63CG802	30UJA11001	H	H	SII	NS-AQ	Y (5)
CRDM #63 Bottom Position Limit Sensor (M)	30JDA63CG803	30UJA11001	H	H	SI	S	Y (5)
CRDM #63 Temperature Sensor (M)	30JDA63CT801	30UJA11001	H	H	SI	S	Y (5)
CRDM #64 Latch Mechanism	30JDA64AE	30UJA11001	H	H	SI	S	Y (5)
CRDM #64 Pressure Housing	30JDA64AE	30UJA11001	H	H	SI	S C/NM	Y (4) Y (5)
CRDM #64 Position Sensor (M)	30JDA64CG801	30UJA11001	H	H	SI	S	Y (5)
CRDM #64 Top Position Limit Sensor (M)	30JDA64CG802	30UJA11001	H	H	SII	NS-AQ	Y (5)
CRDM #64 Bottom Position Limit Sensor (M)	30JDA64CG803	30UJA11001	H	H	SI	S	Y (5)
CRDM #64 Temperature Sensor (M)	30JDA64CT801	30UJA11001	H	H	SI	S	Y (5)
CRDM #65 Latch Mechanism	30JDA65AE	30UJA11001	H	H	SI	S	Y (5)
CRDM #65 Pressure Housing	30JDA65AE	30UJA11001	H	H	SI	S C/NM	Y (4) Y (5)
CRDM #65 Position Sensor (M)	30JDA65CG801	30UJA11001	H	H	SI	S	Y (5)
CRDM #65 Top Position Limit Sensor (M)	30JDA65CG802	30UJA11001	H	H	SII	NS-AQ	Y (5)
CRDM #65 Bottom Position Limit Sensor (M)	30JDA65CG803	30UJA11001	H	H	SI	S	Y (5)
CRDM #65 Temperature Sensor (M)	30JDA65CT801	30UJA11001	H	H	SI	S	Y (5)
CRDM #66 Latch Mechanism	30JDA66AE	30UJA11001	H	H	SI	S	Y (5)
CRDM #66 Pressure Housing	30JDA66AE	30UJA11001	H	H	SI	S C/NM	Y (4) Y (5)
CRDM #66 Position Sensor (M)	30JDA66CG801	30UJA11001	H	H	SI	S	Y (5)
CRDM #66 Top Position Limit Sensor (M)	30JDA66CG802	30UJA11001	H	H	SII	NS-AQ	Y (5)
CRDM #66 Bottom Position Limit Sensor (M)	30JDA66CG803	30UJA11001	H	H	SI	S	Y (5)
CRDM #66 Temperature Sensor (M)	30JDA66CT801	30UJA11001	H	H	SI	S	Y (5)
CRDM #67 Latch Mechanism	30JDA67AE	30UJA11001	H	H	SI	S	Y (5)
CRDM #67 Pressure Housing	30JDA67AE	30UJA11001	H	H	SI	S C/NM	Y (4) Y (5)
CRDM #67 Position Sensor (M)	30JDA67CG801	30UJA11001	H	H	SI	S	Y (5)
CRDM #67 Top Position Limit Sensor (M)	30JDA67CG802	30UJA11001	H	H	SII	NS-AQ	Y (5)
CRDM #67 Bottom Position Limit Sensor (M)	30JDA67CG803	30UJA11001	H	H	SI	S	Y (5)
CRDM #67 Temperature Sensor (M)	30JDA67CT801	30UJA11001	H	H	SI	S	Y (5)
CRDM #68 Latch Mechanism	30JDA68AE	30UJA11001	H	H	SI	S	Y (5)

Table 3.10-1—List of Seismically and Dynamically Qualified Mechanical and Electrical Equipment (Sheet 13 of 197)

Name Tag (Equipment Description)	Tag Number	Local Area KKS ID (Room Location)	EQ Environment (Note 1)	Radiation Environment Zone (Note 2)	EQ Designated Function (Note 3)	Safety Class (Note 4)		EQ Program Designation (Note 5)	
CRDM #68 Pressure Housing	30JDA68AE	30UJA11001	H	H	SI	S	C/NM	Y (4)	Y (5)
CRDM #68 Position Sensor (M)	30JDA68CG801	30UJA11001	H	H	SI	S			Y (5)
CRDM #68 Top Position Limit Sensor (M)	30JDA68CG802	30UJA11001	H	H	SII	NS-AQ			Y (5)
CRDM #68 Bottom Position Limit Sensor (M)	30JDA68CG803	30UJA11001	H	H	SI	S			Y (5)
CRDM #68 Temperature Sensor (M)	30JDA68CT801	30UJA11001	H	H	SI	S			Y (5)
CRDM #69 Latch Mechanism	30JDA69AE	30UJA11001	H	H	SI	S			Y (5)
CRDM #69 Pressure Housing	30JDA69AE	30UJA11001	H	H	SI	S	C/NM	Y (4)	Y (5)
CRDM #69 Position Sensor (M)	30JDA69CG801	30UJA11001	H	H	SI	S			Y (5)
CRDM #69 Top Position Limit Sensor (M)	30JDA69CG802	30UJA11001	H	H	SII	NS-AQ			Y (5)
CRDM #69 Bottom Position Limit Sensor (M)	30JDA69CG803	30UJA11001	H	H	SI	S			Y (5)
CRDM #69 Temperature Sensor (M)	30JDA69CT801	30UJA11001	H	H	SI	S			Y (5)
CRDM #70 Latch Mechanism	30JDA70AE	30UJA11001	H	H	SI	S			Y (5)
CRDM #70 Pressure Housing	30JDA70AE	30UJA11001	H	H	SI	S	C/NM	Y (4)	Y (5)
CRDM #70 Position Sensor (M)	30JDA70CG801	30UJA11001	H	H	SI	S			Y (5)
CRDM #70 Top Position Limit Sensor (M)	30JDA70CG802	30UJA11001	H	H	SII	NS-AQ			Y (5)
CRDM #70 Bottom Position Limit Sensor (M)	30JDA70CG803	30UJA11001	H	H	SI	S			Y (5)
CRDM #70 Temperature Sensor (M)	30JDA70CT801	30UJA11001	H	H	SI	S			Y (5)
CRDM #71 Latch Mechanism	30JDA71AE	30UJA11001	H	H	SI	S			Y (5)
CRDM #71 Pressure Housing	30JDA71AE	30UJA11001	H	H	SI	S	C/NM	Y (4)	Y (5)
CRDM #71 Position Sensor (M)	30JDA71CG801	30UJA11001	H	H	SI	S			Y (5)
CRDM #71 Top Position Limit Sensor (M)	30JDA71CG802	30UJA11001	H	H	SII	NS-AQ			Y (5)
CRDM #71 Bottom Position Limit Sensor (M)	30JDA71CG803	30UJA11001	H	H	SI	S			Y (5)
CRDM #71 Temperature Sensor (M)	30JDA71CT801	30UJA11001	H	H	SI	S			Y (5)
CRDM #72 Latch Mechanism	30JDA72AE	30UJA11001	H	H	SI	S			Y (5)
CRDM #72 Pressure Housing	30JDA72AE	30UJA11001	H	H	SI	S	C/NM	Y (4)	Y (5)
CRDM #72 Position Sensor (M)	30JDA72CG801	30UJA11001	H	H	SI	S			Y (5)
CRDM #72 Top Position Limit Sensor (M)	30JDA72CG802	30UJA11001	H	H	SII	NS-AQ			Y (5)
CRDM #72 Bottom Position Limit Sensor (M)	30JDA72CG803	30UJA11001	H	H	SI	S			Y (5)
CRDM #72 Temperature Sensor (M)	30JDA72CT801	30UJA11001	H	H	SI	S			Y (5)
CRDM #76 Latch Mechanism	30JDA76AE	30UJA11001	H	H	SI	S			Y (5)
CRDM #76 Pressure Housing	30JDA76AE	30UJA11001	H	H	SI	S	C/NM	Y (4)	Y (5)
CRDM #76 Position Sensor (M)	30JDA76CG801	30UJA11001	H	H	SI	S			Y (5)
CRDM #76 Top Position Limit Sensor (M)	30JDA76CG802	30UJA11001	H	H	SII	NS-AQ			Y (5)

Table 3.10-1—List of Seismically and Dynamically Qualified Mechanical and Electrical Equipment (Sheet 14 of 197)

Name Tag (Equipment Description)	Tag Number	Local Area KKS ID (Room Location)	EQ Environment (Note 1)	Radiation Environment Zone (Note 2)	EQ Designated Function (Note 3)	Safety Class (Note 4)	EQ Program Designation (Note 5)
CRDM #76 Bottom Position Limit Sensor (M)	30JDA76CG803	30UJA11001	H	H	SI	S	Y (5)
CRDM #76 Temperature Sensor (M)	30JDA76CT801	30UJA11001	H	H	SI	S	Y (5)
CRDM #77 Latch Mechanism	30JDA77AE	30UJA11001	H	H	SI	S	Y (5)
CRDM #77 Pressure Housing	30JDA77AE	30UJA11001	H	H	SI	S C/NM	Y (4) Y (5)
CRDM #77 Position Sensor (M)	30JDA77CG801	30UJA11001	H	H	SI	S	Y (5)
CRDM #77 Top Position Limit Sensor (M)	30JDA77CG802	30UJA11001	H	H	SII	NS-AQ	Y (5)
CRDM #77 Bottom Position Limit Sensor (M)	30JDA77CG803	30UJA11001	H	H	SI	S	Y (5)
CRDM #77 Temperature Sensor (M)	30JDA77CT801	30UJA11001	H	H	SI	S	Y (5)
CRDM #78 Latch Mechanism	30JDA78AE	30UJA11001	H	H	SI	S	Y (5)
CRDM #78 Pressure Housing	30JDA78AE	30UJA11001	H	H	SI	S C/NM	Y (4) Y (5)
CRDM #78 Position Sensor (M)	30JDA78CG801	30UJA11001	H	H	SI	S	Y (5)
CRDM #78 Top Position Limit Sensor (M)	30JDA78CG802	30UJA11001	H	H	SII	NS-AQ	Y (5)
CRDM #78 Bottom Position Limit Sensor (M)	30JDA78CG803	30UJA11001	H	H	SI	S	Y (5)
CRDM #78 Temperature Sensor (M)	30JDA78CT801	30UJA11001	H	H	SI	S	Y (5)
CRDM #79 Latch Mechanism	30JDA79AE	30UJA11001	H	H	SI	S	Y (5)
CRDM #79 Pressure Housing	30JDA79AE	30UJA11001	H	H	SI	S C/NM	Y (4) Y (5)
CRDM #79 Position Sensor (M)	30JDA79CG801	30UJA11001	H	H	SI	S	Y (5)
CRDM #79 Top Position Limit Sensor (M)	30JDA79CG802	30UJA11001	H	H	SII	NS-AQ	Y (5)
CRDM #79 Bottom Position Limit Sensor (M)	30JDA79CG803	30UJA11001	H	H	SI	S	Y (5)
CRDM #79 Temperature Sensor (M)	30JDA79CT801	30UJA11001	H	H	SI	S	Y (5)
CRDM #80 Latch Mechanism	30JDA80AE	30UJA11001	H	H	SI	S	Y (5)
CRDM #80 Pressure Housing	30JDA80AE	30UJA11001	H	H	SI	S C/NM	Y (4) Y (5)
CRDM #80 Position Sensor (M)	30JDA80CG801	30UJA11001	H	H	SI	S	Y (5)
CRDM #80 Top Position Limit Sensor (M)	30JDA80CG802	30UJA11001	H	H	SII	NS-AQ	Y (5)
CRDM #80 Bottom Position Limit Sensor (M)	30JDA80CG803	30UJA11001	H	H	SI	S	Y (5)
CRDM #80 Temperature Sensor (M)	30JDA80CT801	30UJA11001	H	H	SI	S	Y (5)
CRDM #81 Latch Mechanism	30JDA81AE	30UJA11001	H	H	SI	S	Y (5)
CRDM #81 Pressure Housing	30JDA81AE	30UJA11001	H	H	SI	S C/NM	Y (4) Y (5)
CRDM #81 Position Sensor (M)	30JDA81CG801	30UJA11001	H	H	SI	S	Y (5)
CRDM #81 Top Position Limit Sensor (M)	30JDA81CG802	30UJA11001	H	H	SII	NS-AQ	Y (5)
CRDM #81 Bottom Position Limit Sensor (M)	30JDA81CG803	30UJA11001	H	H	SI	S	Y (5)
CRDM #81 Temperature Sensor (M)	30JDA81CT801	30UJA11001	H	H	SI	S	Y (5)
CRDM #82 Latch Mechanism	30JDA82AE	30UJA11001	H	H	SI	S	Y (5)

Table 3.10-1—List of Seismically and Dynamically Qualified Mechanical and Electrical Equipment (Sheet 15 of 197)

Name Tag (Equipment Description)	Tag Number	Local Area KKS ID (Room Location)	EQ Environment (Note 1)	Radiation Environment Zone (Note 2)	EQ Designated Function (Note 3)	Safety Class (Note 4)		EQ Program Designation (Note 5)	
CRDM #82 Pressure Housing	30JDA82AE	30UJA11001	H	H	SI	S	C/NM	Y (4)	Y (5)
CRDM #82 Position Sensor (M)	30JDA82CG801	30UJA11001	H	H	SI	S			Y (5)
CRDM #82 Top Position Limit Sensor (M)	30JDA82CG802	30UJA11001	H	H	SII	NS-AQ			Y (5)
CRDM #82 Bottom Position Limit Sensor (M)	30JDA82CG803	30UJA11001	H	H	SI	S			Y (5)
CRDM #82 Temperature Sensor (M)	30JDA82CT801	30UJA11001	H	H	SI	S			Y (5)
CRDM #83 Latch Mechanism	30JDA83AE	30UJA11001	H	H	SI	S			Y (5)
CRDM #83 Pressure Housing	30JDA83AE	30UJA11001	H	H	SI	S	C/NM	Y (4)	Y (5)
CRDM #83 Position Sensor (M)	30JDA83CG801	30UJA11001	H	H	SI	S			Y (5)
CRDM #83 Top Position Limit Sensor (M)	30JDA83CG802	30UJA11001	H	H	SII	NS-AQ			Y (5)
CRDM #83 Bottom Position Limit Sensor (M)	30JDA83CG803	30UJA11001	H	H	SI	S			Y (5)
CRDM #83 Temperature Sensor (M)	30JDA83CT801	30UJA11001	H	H	SI	S			Y (5)
CRDM #84 Latch Mechanism	30JDA84AE	30UJA11001	H	H	SI	S			Y (5)
CRDM #84 Pressure Housing	30JDA84AE	30UJA11001	H	H	SI	S	C/NM	Y (4)	Y (5)
CRDM #84 Position Sensor (M)	30JDA84CG801	30UJA11001	H	H	SI	S			Y (5)
CRDM #84 Top Position Limit Sensor (M)	30JDA84CG802	30UJA11001	H	H	SII	NS-AQ			Y (5)
CRDM #84 Bottom Position Limit Sensor (M)	30JDA84CG803	30UJA11001	H	H	SI	S			Y (5)
CRDM #84 Temperature Sensor (M)	30JDA84CT801	30UJA11001	H	H	SI	S			Y (5)
CRDM #85 Latch Mechanism	30JDA85AE	30UJA11001	H	H	SI	S			Y (5)
CRDM #85 Pressure Housing	30JDA85AE	30UJA11001	H	H	SI	S	C/NM	Y (4)	Y (5)
CRDM #85 Position Sensor (M)	30JDA85CG801	30UJA11001	H	H	SI	S			Y (5)
CRDM #85 Top Position Limit Sensor (M)	30JDA85CG802	30UJA11001	H	H	SII	NS-AQ			Y (5)
CRDM #85 Bottom Position Limit Sensor (M)	30JDA85CG803	30UJA11001	H	H	SI	S			Y (5)
CRDM #85 Temperature Sensor (M)	30JDA85CT801	30UJA11001	H	H	SI	S			Y (5)
CRDM #86 Latch Mechanism	30JDA86AE	30UJA11001	H	H	SI	S			Y (5)
CRDM #86 Pressure Housing	30JDA86AE	30UJA11001	H	H	SI	S	C/NM	Y (4)	Y (5)
CRDM #86 Position Sensor (M)	30JDA86CG801	30UJA11001	H	H	SI	S			Y (5)
CRDM #86 Top Position Limit Sensor (M)	30JDA86CG802	30UJA11001	H	H	SII	NS-AQ			Y (5)
CRDM #86 Bottom Position Limit Sensor (M)	30JDA86CG803	30UJA11001	H	H	SI	S			Y (5)
CRDM #86 Temperature Sensor (M)	30JDA86CT801	30UJA11001	H	H	SI	S			Y (5)
CRDM #87 Latch Mechanism	30JDA87AE	30UJA11001	H	H	SI	S			Y (5)
CRDM #87 Pressure Housing	30JDA87AE	30UJA11001	H	H	SI	S	C/NM	Y (4)	Y (5)
CRDM #87 Position Sensor (M)	30JDA87CG801	30UJA11001	H	H	SI	S			Y (5)
CRDM #87 Top Position Limit Sensor (M)	30JDA87CG802	30UJA11001	H	H	SII	NS-AQ			Y (5)

Table 3.10-1—List of Seismically and Dynamically Qualified Mechanical and Electrical Equipment (Sheet 16 of 197)

Name Tag (Equipment Description)	Tag Number	Local Area KKS ID (Room Location)	EQ Environment (Note 1)	Radiation Environment Zone (Note 2)	EQ Designated Function (Note 3)	Safety Class (Note 4)	EQ Program Designation (Note 5)
CRDM #87 Bottom Position Limit Sensor (M)	30JDA87CG803	30UJA11001	H	H	SI	S	Y (5)
CRDM #87 Temperature Sensor (M)	30JDA87CT801	30UJA11001	H	H	SI	S	Y (5)
CRDM #88 Latch Mechanism	30JDA88AE	30UJA11001	H	H	SI	S	Y (5)
CRDM #88 Pressure Housing	30JDA88AE	30UJA11001	H	H	SI	S C/NM	Y (4) Y (5)
CRDM #88 Position Sensor (M)	30JDA88CG801	30UJA11001	H	H	SI	S	Y (5)
CRDM #88 Top Position Limit Sensor (M)	30JDA88CG802	30UJA11001	H	H	SII	NS-AQ	Y (5)
CRDM #88 Bottom Position Limit Sensor (M)	30JDA88CG803	30UJA11001	H	H	SI	S	Y (5)
CRDM #88 Temperature Sensor (M)	30JDA88CT801	30UJA11001	H	H	SI	S	Y (5)
CRDM #89 Latch Mechanism	30JDA89AE	30UJA11001	H	H	SI	S	Y (5)
CRDM #89 Pressure Housing	30JDA89AE	30UJA11001	H	H	SI	S C/NM	Y (4) Y (5)
CRDM #89 Position Sensor (M)	30JDA89CG801	30UJA11001	H	H	SI	S	Y (5)
CRDM #89 Top Position Limit Sensor (M)	30JDA89CG802	30UJA11001	H	H	SII	NS-AQ	Y (5)
CRDM #89 Bottom Position Limit Sensor (M)	30JDA89CG803	30UJA11001	H	H	SI	S	Y (5)
CRDM #89 Temperature Sensor (M)	30JDA89CT801	30UJA11001	H	H	SI	S	Y (5)
CRDM #90 Latch Mechanism	30JDA90AE	30UJA11001	H	H	SI	S	Y (5)
CRDM #90 Pressure Housing	30JDA90AE	30UJA11001	H	H	SI	S C/NM	Y (4) Y (5)
CRDM #90 Position Sensor (M)	30JDA90CG801	30UJA11001	H	H	SI	S	Y (5)
CRDM #90 Top Position Limit Sensor (M)	30JDA90CG802	30UJA11001	H	H	SII	NS-AQ	Y (5)
CRDM #90 Bottom Position Limit Sensor (M)	30JDA90CG803	30UJA11001	H	H	SI	S	Y (5)
CRDM #90 Temperature Sensor (M)	30JDA90CT801	30UJA11001	H	H	SI	S	Y (5)
CRDM #91 Latch Mechanism	30JDA91AE	30UJA11001	H	H	SI	S	Y (5)
CRDM #91 Pressure Housing	30JDA91AE	30UJA11001	H	H	SI	S C/NM	Y (4) Y (5)
CRDM #91 Position Sensor (M)	30JDA91CG801	30UJA11001	H	H	SI	S	Y (5)
CRDM #91 Top Position Limit Sensor (M)	30JDA91CG802	30UJA11001	H	H	SII	NS-AQ	Y (5)
CRDM #91 Bottom Position Limit Sensor (M)	30JDA91CG803	30UJA11001	H	H	SI	S	Y (5)
CRDM #91 Temperature Sensor (M)	30JDA91CT801	30UJA11001	H	H	SI	S	Y (5)
CRDM #92 Latch Mechanism	30JDA92AE	30UJA11001	H	H	SI	S	Y (5)
CRDM #92 Pressure Housing	30JDA92AE	30UJA11001	H	H	SI	S C/NM	Y (4) Y (5)
CRDM #92 Position Sensor (M)	30JDA92CG801	30UJA11001	H	H	SI	S	Y (5)
CRDM #92 Top Position Limit Sensor (M)	30JDA92CG802	30UJA11001	H	H	SII	NS-AQ	Y (5)
CRDM #92 Bottom Position Limit Sensor (M)	30JDA92CG803	30UJA11001	H	H	SI	S	Y (5)
CRDM #92 Temperature Sensor (M)	30JDA92CT801	30UJA11001	H	H	SI	S	Y (5)
CRDM #93 Latch Mechanism	30JDA93AE	30UJA11001	H	H	SI	S	Y (5)

Table 3.10-1—List of Seismically and Dynamically Qualified Mechanical and Electrical Equipment (Sheet 17 of 197)

Name Tag (Equipment Description)	Tag Number	Local Area KKS ID (Room Location)	EQ Environment (Note 1)	Radiation Environment Zone (Note 2)	EQ Designated Function (Note 3)	Safety Class (Note 4)		EQ Program Designation (Note 5)	
CRDM #93 Pressure Housing	30JDA93AE	30UJA11001	H	H	SI	S	C/NM	Y (4)	Y (5)
CRDM #93 Position Sensor (M)	30JDA93CG801	30UJA11001	H	H	SI	S			Y (5)
CRDM #93 Top Position Limit Sensor (M)	30JDA93CG802	30UJA11001	H	H	SII	NS-AQ			Y (5)
CRDM #93 Bottom Position Limit Sensor (M)	30JDA93CG803	30UJA11001	H	H	SI	S			Y (5)
CRDM #93 Temperature Sensor (M)	30JDA93CT801	30UJA11001	H	H	SI	S			Y (5)
CRDM #94 Latch Mechanism	30JDA94AE	30UJA11001	H	H	SI	S			Y (5)
CRDM #94 Pressure Housing	30JDA94AE	30UJA11001	H	H	SI	S	C/NM	Y (4)	Y (5)
CRDM #94 Position Sensor (M)	30JDA94CG801	30UJA11001	H	H	SI	S			Y (5)
CRDM #94 Top Position Limit Sensor (M)	30JDA94CG802	30UJA11001	H	H	SII	NS-AQ			Y (5)
CRDM #94 Bottom Position Limit Sensor (M)	30JDA94CG803	30UJA11001	H	H	SI	S			Y (5)
CRDM #94 Temperature Sensor (M)	30JDA94CT801	30UJA11001	H	H	SI	S			Y (5)
CRDM #95 Latch Mechanism	30JDA95AE	30UJA11001	H	H	SI	S			Y (5)
CRDM #95 Pressure Housing	30JDA95AE	30UJA11001	H	H	SI	S	C/NM	Y (4)	Y (5)
CRDM #95 Position Sensor (M)	30JDA95CG801	30UJA11001	H	H	SI	S			Y (5)
CRDM #95 Top Position Limit Sensor (M)	30JDA95CG802	30UJA11001	H	H	SII	NS-AQ			Y (5)
CRDM #95 Bottom Position Limit Sensor (M)	30JDA95CG803	30UJA11001	H	H	SI	S			Y (5)
CRDM #95 Temperature Sensor (M)	30JDA95CT801	30UJA11001	H	H	SI	S			Y (5)
CRDM #96 Latch Mechanism	30JDA96AE	30UJA11001	H	H	SI	S			Y (5)
CRDM #96 Pressure Housing	30JDA96AE	30UJA11001	H	H	SI	S	C/NM	Y (4)	Y (5)
CRDM #96 Position Sensor (M)	30JDA96CG801	30UJA11001	H	H	SI	S			Y (5)
CRDM #96 Top Position Limit Sensor (M)	30JDA96CG802	30UJA11001	H	H	SII	NS-AQ			Y (5)
CRDM #96 Bottom Position Limit Sensor (M)	30JDA96CG803	30UJA11001	H	H	SI	S			Y (5)
CRDM #96 Temperature Sensor (M)	30JDA96CT801	30UJA11001	H	H	SI	S			Y (5)
CRDM #97 Latch Mechanism	30JDA97AE	30UJA11001	H	H	SI	S			Y (5)
CRDM #97 Pressure Housing	30JDA97AE	30UJA11001	H	H	SI	S	C/NM	Y (4)	Y (5)
CRDM #97 Position Sensor (M)	30JDA97CG801	30UJA11001	H	H	SI	S			Y (5)
CRDM #97 Top Position Limit Sensor (M)	30JDA97CG802	30UJA11001	H	H	SII	NS-AQ			Y (5)
CRDM #97 Bottom Position Limit Sensor (M)	30JDA97CG803	30UJA11001	H	H	SI	S			Y (5)
CRDM #97 Temperature Sensor (M)	30JDA97CT801	30UJA11001	H	H	SI	S			Y (5)
CRDM #99 Latch Mechanism	30JDA99AE	30UJA11001	H	H	SI	S			Y (5)
CRDM #99 Pressure Housing	30JDA99AE	30UJA11001	H	H	SI	S	C/NM	Y (4)	Y (5)
CRDM #99 Position Sensor (M)	30JDA99CG801	30UJA11001	H	H	SI	S			Y (5)
CRDM #99 Top Position Limit Sensor (M)	30JDA99CG802	30UJA11001	H	H	SII	NS-AQ			Y (5)

Table 3.10-1—List of Seismically and Dynamically Qualified Mechanical and Electrical Equipment (Sheet 18 of 197)

Name Tag (Equipment Description)	Tag Number	Local Area KKS ID (Room Location)	EQ Environment (Note 1)	Radiation Environment Zone (Note 2)	EQ Designated Function (Note 3)	Safety Class (Note 4)	EQ Program Designation (Note 5)
CRDM #99 Bottom Position Limit Sensor (M)	30JDA99CG803	30UJA11001	H	H	SI	S	Y (5)
CRDM #99 Temperature Sensor (M)	30JDA99CT801	30UJA11001	H	H	SI	S	Y (5)
Steam Generator, Loop 1							
Steam Generator Loop 1	30JEA10AC001	30UJA15003	H	H	SI	S	Y (5)
SG WR Level Instr Lower Vlv #1 Loop 1	30JEA10AA301	30UJA15003	H	H	SI	S C/NM	Y (4) Y (5)
SG WR Level Instr Lower Vlv #2 Loop 1	30JEA10AA303	30UJA15003	H	H	SI	S C/NM	Y (4) Y (5)
SG WR Level Instr Lower Vlv #3 Loop 1	30JEA10AA305	30UJA15003	H	H	SI	S C/NM	Y (4) Y (5)
SG WR Level Instr Lower Vlv #4 Loop 1	30JEA10AA307	30UJA15003	H	H	SI	S C/NM	Y (4) Y (5)
SG Level Instr Upper Vlv #1 Loop 1	30JEA10AA302	30UJA34003	H	H	SI	S C/NM	Y (4) Y (5)
SG Level Instr Upper Vlv #2 Loop 1	30JEA10AA304	30UJA34003	H	H	SI	S C/NM	Y (4) Y (5)
SG Level Instr Upper Vlv #3 Loop 1	30JEA10AA306	30UJA34003	H	H	SI	S C/NM	Y (4) Y (5)
SG Level Instr Upper Vlv #4 Loop 1	30JEA10AA308	30UJA34003	H	H	SI	S C/NM	Y (4) Y (5)
SG NR Level Instr Lower Vlv #1 Loop 1	30JEA10AA309	30UJA29003	H	H	SI	S C/NM	Y (4) Y (5)
SG NR Level Instr Lower Vlv #2 Loop 1	30JEA10AA311	30UJA29003	H	H	SI	S C/NM	Y (4) Y (5)
SG NR Level Instr Lower Vlv #3 Loop 1	30JEA10AA313	30UJA29003	H	H	SI	S C/NM	Y (4) Y (5)
SG NR Level Instr Lower Vlv #4 Loop 1	30JEA10AA315	30UJA29003	H	H	SI	S C/NM	Y (4) Y (5)
SG WR Cold Cal Level Instr Vlv Loop 1	30JEA10AA317	30UJA18003	H	H	SI	S C/NM	Y (4) Y (5)
SG Sample Vlv Loop 1	30JEA10AA601	30UJA29003	H	H	SI	S C/NM	Y (4) Y (5)
Main Steam Flow Sensor #1 Loop 1 (PB)	30JEA10CF030	30UJA34003	H	H	SI	S	Y (5)
Main Steam Flow Sensor #2 Loop 1 (PB)	30JEA10CF031	30UJA34003	H	H	SI	S	Y (5)
Main Steam Flow Sensor #3 Loop 1 (PB)	30JEA10CF032	30UJA34003	H	H	SI	S	Y (5)
SG NR Level Sensor #1 Loop 1 (PB)	30JEA10CL801	30UJA29003	H	H	SI	S	Y (5)
SG NR Level Sensor #2 Loop 1 (PB)	30JEA10CL802	30UJA29003	H	H	SI	S	Y (5)
SG NR Level Sensor #3 Loop 1 (PB)	30JEA10CL803	30UJA29003	H	H	SI	S	Y (5)
SG NR Level Sensor #4 Loop 1 (PB)	30JEA10CL804	30UJA29003	H	H	SI	S	Y (5)
SG WR Level Sensor #1 Loop 1 (PB)	30JEA10CL809	30UJA15003	H	H	PAM SI	S	Y (5)
SG WR Level Sensor #2 Loop 1 (PB)	30JEA10CL810	30UJA15003	H	H	PAM SI	S	Y (5)
SG WR Level Sensor #3 Loop 1 (PB)	30JEA10CL811	30UJA15003	H	H	PAM SI	S	Y (5)
SG WR Level Sensor #4 Loop 1 (PB)	30JEA10CL812	30UJA15003	H	H	PAM SI	S	Y (5)
SG WR Level Sensor #5 Loop 1 (PB)	30JEA10CL020	30UJA15003	H	H	SI	S	Y (5)
Steam Generator, Loop 2							
Steam Generator Loop 2	30JEA20AC001	30UJA15004	H	H	SI	S	Y (5)

Table 3.10-1—List of Seismically and Dynamically Qualified Mechanical and Electrical Equipment (Sheet 19 of 197)

Name Tag (Equipment Description)	Tag Number	Local Area KKS ID (Room Location)	EQ Environment (Note 1)	Radiation Environment Zone (Note 2)	EQ Designated Function (Note 3)	Safety Class (Note 4)	EQ Program Designation (Note 5)
SG WR Level Instr Lower Vlv #1 Loop 2	30JEA20AA301	30UJA15004	H	H	SI	S C/NM	Y (4) Y (5)
SG WR Level Instr Lower Vlv #2 Loop 2	30JEA20AA303	30UJA15004	H	H	SI	S C/NM	Y (4) Y (5)
SG WR Level Instr Lower Vlv #3 Loop 2	30JEA20AA305	30UJA15004	H	H	SI	S C/NM	Y (4) Y (5)
SG WR Level Instr Lower Vlv #4 Loop 2	30JEA20AA307	30UJA18004	H	H	SI	S C/NM	Y (4) Y (5)
SG Level Instr Upper Vlv #1 Loop 2	30JEA20AA302	30UJA34004	H	H	SI	S C/NM	Y (4) Y (5)
SG Level Instr Upper Vlv #2 Loop 2	30JEA20AA304	30UJA34004	H	H	SI	S C/NM	Y (4) Y (5)
SG Level Instr Upper Vlv #3 Loop 2	30JEA20AA306	30UJA34004	H	H	SI	S C/NM	Y (4) Y (5)
SG Level Instr Upper Vlv #4 Loop 2	30JEA20AA308	30UJA34004	H	H	SI	S C/NM	Y (4) Y (5)
SG NR Level Instr Lower Vlv #1 Loop 2	30JEA20AA309	30UJA29004	H	H	SI	S C/NM	Y (4) Y (5)
SG NR Level Instr Lower Vlv #2 Loop 2	30JEA20AA311	30UJA29004	H	H	SI	S C/NM	Y (4) Y (5)
SG NR Level Instr Lower Vlv #3 Loop 2	30JEA20AA313	30UJA29004	H	H	SI	S C/NM	Y (4) Y (5)
SG NR Level Instr Lower Vlv #4 Loop 2	30JEA20AA315	30UJA29004	H	H	SI	S C/NM	Y (4) Y (5)
SG WR Cold Cal Level Instr Vlv Loop 2	30JEA20AA317	30UJA18004	H	H	SI	S C/NM	Y (4) Y (5)
SG Sample Vlv Loop 2	30JEA20AA601	30UJA29004	H	H	SI	S C/NM	Y (4) Y (5)
Main Steam Flow Sensor #1 Loop 2 (PB)	30JEA20CF030	30UJA34004	H	H	SI	S	Y (5)
Main Steam Flow Sensor #2 Loop 2 (PB)	30JEA20CF031	30UJA34004	H	H	SI	S	Y (5)
Main Steam Flow Sensor #3 Loop 2 (PB)	30JEA20CF032	30UJA34004	H	H	SI	S	Y (5)
SG NR Level Sensor #1 Loop 2 (PB)	30JEA20CL801	30UJA29004	H	H	SI	S	Y (5)
SG NR Level Sensor #2 Loop 2 (PB)	30JEA20CL802	30UJA29004	H	H	SI	S	Y (5)
SG NR Level Sensor #3 Loop 2 (PB)	30JEA20CL803	30UJA29004	H	H	SI	S	Y (5)
SG NR Level Sensor #4 Loop 2 (PB)	30JEA20CL804	30UJA29004	H	H	SI	S	Y (5)
SG WR Level Sensor #1 Loop 2 (PB)	30JEA20CL809	30UJA15004	H	H	PAM SI	S	Y (5)
SG WR Level Sensor #2 Loop 2 (PB)	30JEA20CL810	30UJA15004	H	H	PAM SI	S	Y (5)
SG WR Level Sensor #3 Loop 2 (PB)	30JEA20CL811	30UJA15004	H	H	PAM SI	S	Y (5)
SG WR Level Sensor #4 Loop 2 (PB)	30JEA20CL812	30UJA15004	H	H	PAM SI	S	Y (5)
SG WR Level Sensor #5 Loop 2 (PB)	30JEA20CL020	30UJA15004	H	H	SI	S	Y (5)
Steam Generator, Loop 3							
Steam Generator Loop 3	30JEA30AC001	30UJA15007	H	H	SI	S	Y (5)
SG WR Level Instr Lower Vlv #1 Loop 3	30JEA30AA301	30UJA15007	H	H	SI	S C/NM	Y (4) Y (5)
SG WR Level Instr Lower Vlv #2 Loop 3	30JEA30AA303	30UJA15007	H	H	SI	S C/NM	Y (4) Y (5)
SG WR Level Instr Lower Vlv #3 Loop 3	30JEA30AA305	30UJA15007	H	H	SI	S C/NM	Y (4) Y (5)
SG WR Level Instr Lower Vlv #4 Loop 3	30JEA30AA307	30UJA15007	H	H	SI	S C/NM	Y (4) Y (5)
SG Level Instr Upper Vlv #1 Loop 3	30JEA30AA302	30UJA34007	H	H	SI	S C/NM	Y (4) Y (5)

Table 3.10-1—List of Seismically and Dynamically Qualified Mechanical and Electrical Equipment (Sheet 20 of 197)

Name Tag (Equipment Description)	Tag Number	Local Area KKS ID (Room Location)	EQ Environment (Note 1)	Radiation Environment Zone (Note 2)	EQ Designated Function (Note 3)	Safety Class (Note 4)	EQ Program Designation (Note 5)
SG Level Instr Upper Vlv #2 Loop 3	30JEA30AA304	30UJA34007	H	H	SI	S C/NM	Y (4) Y (5)
SG Level Instr Upper Vlv #3 Loop 3	30JEA30AA306	30UJA34007	H	H	SI	S C/NM	Y (4) Y (5)
SG Level Instr Upper Vlv #4 Loop 3	30JEA30AA308	30UJA34007	H	H	SI	S C/NM	Y (4) Y (5)
SG NR Level Instr Lower Vlv #1 Loop 3	30JEA30AA309	30UJA29007	H	H	SI	S C/NM	Y (4) Y (5)
SG NR Level Instr Lower Vlv #2 Loop 3	30JEA30AA311	30UJA29007	H	H	SI	S C/NM	Y (4) Y (5)
SG NR Level Instr Lower Vlv #3 Loop 3	30JEA30AA313	30UJA29007	H	H	SI	S C/NM	Y (4) Y (5)
SG NR Level Instr Lower Vlv #4 Loop 3	30JEA30AA315	30UJA29007	H	H	SI	S C/NM	Y (4) Y (5)
SG WR Cold Cal Level Instr Vlv Loop 3	30JEA30AA317	30UJA18007	H	H	SI	S C/NM	Y (4) Y (5)
SG Sample Vlv Loop 3	30JEA30AA601	30UJA29007	H	H	SI	S C/NM	Y (4) Y (5)
Main Steam Flow Sensor #1 Loop 3 (PB)	30JEA30CF030	30UJA34007	H	H	SI	S	Y (5)
Main Steam Flow Sensor #2 Loop 3 (PB)	30JEA30CF031	30UJA34007	H	H	SI	S	Y (5)
Main Steam Flow Sensor #3 Loop 3 (PB)	30JEA30CF032	30UJA34007	H	H	SI	S	Y (5)
SG NR Level Sensor #1 Loop 3 (PB)	30JEA30CL801	30UJA29007	H	H	SI	S	Y (5)
SG NR Level Sensor #2 Loop 3 (PB)	30JEA30CL802	30UJA29007	H	H	SI	S	Y (5)
SG NR Level Sensor #3 Loop 3 (PB)	30JEA30CL803	30UJA29007	H	H	SI	S	Y (5)
SG NR Level Sensor #4 Loop 3 (PB)	30JEA30CL804	30UJA29007	H	H	SI	S	Y (5)
SG WR Level Sensor #1 Loop 3 (PB)	30JEA30CL809	30UJA15007	H	H	PAM SI	S	Y (5)
SG WR Level Sensor #2 Loop 3 (PB)	30JEA30CL810	30UJA15007	H	H	PAM SI	S	Y (5)
SG WR Level Sensor #3 Loop 3 (PB)	30JEA30CL811	30UJA15007	H	H	PAM SI	S	Y (5)
SG WR Level Sensor #4 Loop 3 (PB)	30JEA30CL812	30UJA15007	H	H	PAM SI	S	Y (5)
SG WR Level Sensor #5 Loop 3 (PB)	30JEA30CL020	30UJA15007	H	H	SI	S	Y (5)
Steam Generator, Loop 4							
Steam Generator Loop 4	30JEA40AC001	30UJA15008	H	H	SI	S	Y (5)
SG WR Level Instr Lower Vlv #1 Loop 4	30JEA40AA301	30UJA18008	H	H	SI	S C/NM	Y (4) Y (5)
SG WR Level Instr Lower Vlv #2 Loop 4	30JEA40AA303	30UJA18008	H	H	SI	S C/NM	Y (4) Y (5)
SG WR Level Instr Lower Vlv #3 Loop 4	30JEA40AA305	30UJA18008	H	H	SI	S C/NM	Y (4) Y (5)
SG WR Level Instr Lower Vlv #4 Loop 4	30JEA40AA307	30UJA15008	H	H	SI	S C/NM	Y (4) Y (5)
SG Level Instr Upper Vlv #1 Loop 4	30JEA40AA302	30UJA34008	H	H	SI	S C/NM	Y (4) Y (5)
SG Level Instr Upper Vlv #2 Loop 4	30JEA40AA304	30UJA34008	H	H	SI	S C/NM	Y (4) Y (5)
SG Level Instr Upper Vlv #3 Loop 4	30JEA40AA306	30UJA34008	H	H	SI	S C/NM	Y (4) Y (5)
SG Level Instr Upper Vlv #4 Loop 4	30JEA40AA308	30UJA34008	H	H	SI	S C/NM	Y (4) Y (5)
SG NR Level Instr Lower Vlv #1 Loop 4	30JEA40AA309	30UJA29008	H	H	SI	S C/NM	Y (4) Y (5)
SG NR Level Instr Lower Vlv #2 Loop 4	30JEA40AA311	30UJA29008	H	H	SI	S C/NM	Y (4) Y (5)

Table 3.10-1—List of Seismically and Dynamically Qualified Mechanical and Electrical Equipment (Sheet 21 of 197)

Name Tag (Equipment Description)	Tag Number	Local Area KKS ID (Room Location)	EQ Environment (Note 1)	Radiation Environment Zone (Note 2)	EQ Designated Function (Note 3)	Safety Class (Note 4)	EQ Program Designation (Note 5)
SG NR Level Instr Lower Vlv #3 Loop 4	30JEA40AA313	30UJA29008	H	H	SI	S C/NM	Y (4) Y (5)
SG NR Level Instr Lower Vlv #4 Loop 4	30JEA40AA315	30UJA29008	H	H	SI	S C/NM	Y (4) Y (5)
SG WR Cold Cal Level Instr Vlv Loop 4	30JEA40AA317	30UJA18008	H	H	SI	S C/NM	Y (4) Y (5)
SG Sample Vlv Loop 4	30JEA40AA601	30UJA29008	H	H	SI	S C/NM	Y (4) Y (5)
Main Steam Flow Sensor #1 Loop 4 (PB)	30JEA40CF030	30UJA34008	H	H	SI	S	Y (5)
Main Steam Flow Sensor #2 Loop 4 (PB)	30JEA40CF031	30UJA34008	H	H	SI	S	Y (5)
Main Steam Flow Sensor #3 Loop 4 (PB)	30JEA40CF032	30UJA34008	H	H	SI	S	Y (5)
SG NR Level Sensor #1 Loop 4 (PB)	30JEA40CL801	30UJA29008	H	H	SI	S	Y (5)
SG NR Level Sensor #2 Loop 4 (PB)	30JEA40CL802	30UJA29008	H	H	SI	S	Y (5)
SG NR Level Sensor #3 Loop 4 (PB)	30JEA40CL803	30UJA29008	H	H	SI	S	Y (5)
SG NR Level Sensor #4 Loop 4 (PB)	30JEA40CL804	30UJA29008	H	H	SI	S	Y (5)
SG WR Level Sensor #1 Loop 4 (PB)	30JEA40CL809	30UJA15008	H	H	PAM SI	S	Y (5)
SG WR Level Sensor #2 Loop 4 (PB)	30JEA40CL810	30UJA15008	H	H	PAM SI	S	Y (5)
SG WR Level Sensor #3 Loop 4 (PB)	30JEA40CL811	30UJA15008	H	H	PAM SI	S	Y (5)
SG WR Level Sensor #4 Loop 4 (PB)	30JEA40CL812	30UJA15008	H	H	PAM SI	S	Y (5)
SG WR Level Sensor #5 Loop 4 (PB)	30JEA40CL020	30UJA15008	H	H	SI	S	Y (5)
RCP, Loop 1							
Reactor Coolant Pump Loop 1	30JEB10AP001	30UJA11002	H	H	SI	S C/NM	Y (4) Y (5)
TB Inlet Cooling Water Vlv Loop 1	30JEB10AA021	30UJA15002	H	H	SI	S C/NM	Y (4) Y (5)
TB Inlet Water Check Vlv Loop 1	30JEB10AA001	30UJA15002	H	H	SI	S C/NM	Y (4) Y (5)
TB Outlet Water Throttle Vlv Loop 1	30JEB10AA002	30UJA15002	H	H	SI	S C/NM	Y (4) Y (5)
TB Outlet Cooling Water Vlv Loop 1	30JEB10AA003	30UJA15002	H	H	SI	S C/NM	Y (4) Y (5)
TB Cooling Water Relief Vlv Loop 1	30JEB10AA191	30UJA15002	H	H	SI	S C/NM	Y (4) Y (5)
TB Cooling Water Press Vlv Loop 1	30JEB10AA302	30UJA15002	H	H	SI	S C/NM	Y (4) Y (5)
RCP Seal #1 Sweeping Vlv #1 Loop 1	30JEB10AA006	30UJA34014	H	H	SI	S C/NM	Y (4) Y (5)
RCP Seal #1 Sweeping Vlv #2 Loop 1	30JEB10AA029	30UJA34014	H	H	SI	S C/NM	Y (4) Y (5)
RCP Seal #1 Inject Vlv #1 Loop 1	30JEB10AA005	30UJA15002	H	H	SI	S C/NM	Y (4) Y (5)
RCP Seal #1 Inject Vlv #2 Loop 1	30JEB10AA004	30UJA15002	H	H	SI	S C/NM	Y (4) Y (5)
RCP Seal #1 Injec Bypass Vlv #1 Loop 1	30JEB10AA007	30UJA18002	H	H	SI	S C/NM	Y (4) Y (5)
RCP Seal #1 Injec Bypass Vlv #2 Loop 1	30JEB10AA008	30UJA18002	H	H	SI	S C/NM	Y (4) Y (5)
RCP Seal #1 Inject Drain Vlv #1 Loop 1	30JEB10AA410	30UJA15002	H	H	SI	S C/NM	Y (4) Y (5)
RCP Seal #1 Inject Drain Vlv #2 Loop 1	30JEB10AA412	30UJA15002	H	H	SI	S C/NM	Y (4) Y (5)
RCP Seal #1 Inject Drain Vlv #3 Loop 1	30JEB10AA411	30UJA15002	H	H	SI	S C/NM	Y (4) Y (5)

Table 3.10-1—List of Seismically and Dynamically Qualified Mechanical and Electrical Equipment (Sheet 22 of 197)

Name Tag (Equipment Description)	Tag Number	Local Area KKS ID (Room Location)	EQ Environment (Note 1)	Radiation Environment Zone (Note 2)	EQ Designated Function (Note 3)	Safety Class (Note 4)		EQ Program Designation (Note 5)	
RCP Seal #1 Leakoff Vlv Loop 1	30JEB10AA009	30UJA18002	H	H	SI	S	C/NM	Y (4)	Y (5)
RCP Seal #1 Leakoff Drain Vlv #1 Loop 1	30JEB10AA501	30UJA18002	H	H	SI	S	C/NM	Y (4)	Y (5)
RCP Seal #1 Leakoff Drain Vlv #2 Loop 1	30JEB10AA502	30UJA18002	H	H	SI	S	C/NM	Y (4)	Y (5)
RCP Seal #1 Diff Press Vlv #1 Loop 1	30JEB10AA303	30UJA15002	H	H	SI	S	C/NM	Y (4)	Y (5)
RCP Seal #1 Diff Press Vlv #2 Loop 1	30JEB10AA304	30UJA18002	H	H	SI	S	C/NM	Y (4)	Y (5)
RCP Seal #2 Leakoff Tank Loop 1	30JEB10BB002	30UJA18003	H	H	SII	NS-AQ			Y (5)
RCP Seal #2 Tk Water Makeup Vlv Loop 1	30JEB10AA022	30UJA18003	H	H	SII	NS-AQ	C/NM	Y (4)	Y (5)
RCP Seal #2 Tk Water Flow Restr Loop 1	30JEB10BP023	30UJA18003	H	H	SII	NS-AQ			Y (5)
RCP Seal #2 Tk Level Lwr Vlv Loop 1	30JEB10AA312	30UJA18003	H	H	SII	NS-AQ	C/NM	Y (4)	Y (5)
RCP Seal #2 Tk Level Upr Vlv Loop 1	30JEB10AA311	30UJA18003	H	H	SII	NS-AQ	C/NM	Y (4)	Y (5)
RCP Seal #2 Leakoff Vlv Loop 1	30JEB10AA010	30UJA18002	H	H	SII	NS-AQ	C/NM	Y (4)	Y (5)
RCP Seal #2 Leakoff Drain Vlv #1 Loop 1	30JEB10AA407	30UJA15002	H	H	SII	NS-AQ	C/NM	Y (4)	Y (5)
RCP Seal #2 Leakoff Drain Vlv #2 Loop 1	30JEB10AA408	30UJA15002	H	H	SII	NS-AQ	C/NM	Y (4)	Y (5)
RCP Seal #2 NR Flow Sensr Byp Vlv Loop 1	30JEB10AA011	30UJA18003	H	H	SII	NS-AQ	C/NM	Y (4)	Y (5)
RCP Seal #2 NR Flowrate Vlv #1 Loop 1	30JEB10AA309	30UJA18003	H	H	SII	NS-AQ	C/NM	Y (4)	Y (5)
RCP Seal #2 NR Flowrate Vlv #2 Loop 1	30JEB10AA310	30UJA18003	H	H	SII	NS-AQ	C/NM	Y (4)	Y (5)
RCP Seal #2 WR Flowrate Vlv #1 Loop 1	30JEB10AA305	30UJA18003	H	H	SII	NS-AQ	C/NM	Y (4)	Y (5)
RCP Seal #2 WR Flowrate Vlv #2 Loop 1	30JEB10AA306	30UJA18003	H	H	SII	NS-AQ	C/NM	Y (4)	Y (5)
RCP Seal #3 Inject Vlv Loop 1	30JEB10AA013	30UJA34014	H	H	SII	NS-AQ	C/NM	Y (4)	Y (5)
RCP Seal #3 Inject Control Vlv Loop 1	30JEB10AA014	30UJA34014	H	H	SII	NS-AQ	C/NM	Y (4)	Y (5)
RCP Seal #3 Inject Check Vlv #1 Loop 1	30JEB10AA015	30UJA34014	H	H	SII	NS-AQ	C/NM	Y (4)	Y (5)
RCP Seal #3 Inject Check Vlv #2 Loop 1	30JEB10AA016	30UJA18002	H	H	SII	NS-AQ	C/NM	Y (4)	Y (5)
RCP Seal #3 Injection Tank Loop 1	30JEB10BB001	30UJA34014	H	H	SII	NS-AQ			Y (5)
RCP Seal #3 Tk Level Lwr Vlv Loop 1	30JEB10AA308	30UJA34014	H	H	SII	NS-AQ	C/NM	Y (4)	Y (5)
RCP Seal #3 Tk Level Upr Vlv Loop 1	30JEB10AA307	30UJA34014	H	H	SII	NS-AQ	C/NM	Y (4)	Y (5)
RCP Seal #3 Leakoff Vlv Loop 1	30JEB10AA017	30UJA15013	H	H	SII	NS-AQ	C/NM	Y (4)	Y (5)
SSSS Actuation Vlv Loop 1	30JEB10AA018	30UJA15002	H	H	SII	NS-AQ	C/NM	Y (4)	Y (5)
SSSS Nitrogen Accum Tank Loop 1	30JEB10BB003	30UJA15002	H	H	SII	NS-AQ			Y (5)
SSSS Nitrogen High Press Vlv Loop 1	30JEB10AA019	30UJA15002	H	H	SII	NS-AQ	C/NM	Y (4)	Y (5)
SSSS Nitrogen Low Press Vlv Loop 1	30JEB10AA026	30UJA15002	H	H	SII	NS-AQ	C/NM	Y (4)	Y (5)
SSSS Atmospheric Vent Vlv Loop 1	30JEB10AA020	30UJA15002	H	H	SII	NS-AQ	C/NM	Y (4)	Y (5)
RCP-M Oil Lift Pump Loop 1	30JEB10AP011	30UJA15002	H	H	SI	S	C/NM	Y (4)	Y (5)
RCP-M Oil Lift Pump Suct Vlv Loop 1	30JEB10AA030	30UJA18002	H	H	SI	S	C/NM	Y (4)	Y (5)

Table 3.10-1—List of Seismically and Dynamically Qualified Mechanical and Electrical Equipment (Sheet 23 of 197)

Name Tag (Equipment Description)	Tag Number	Local Area KKS ID (Room Location)	EQ Environment (Note 1)	Radiation Environment Zone (Note 2)	EQ Designated Function (Note 3)	Safety Class (Note 4)		EQ Program Designation (Note 5)	
RCP-M Oil Lift Pump Suct Filter Loop 1	30JEB10AT021	30UJA15002	H	H	SI	S	C/NM	Y (4)	Y (5)
RCP-M Oil Lift Pump Relief Vlv Loop 1	30JEB10AA192	30UJA18002	H	H	SI	S	C/NM	Y (4)	Y (5)
RCP-M Oil Lift Pump Disch Filter Loop 1	30JEB10AT031	30UJA15002	H	H	SI	S	C/NM	Y (4)	Y (5)
RCP-M Oil Coll Tank Loop 1	30JEB10BB004	30UJA11002	H	H	SII	NS-AQ			Y (5)
RCP-M Oil Coll Tk Level Lwr Vlv Loop 1	30JEB10AA314	30UJA11002	H	H	SII	NS-AQ	C/NM	Y (4)	Y (5)
RCP-M Oil Coll Tk Level Upr Vlv Loop 1	30JEB10AA313	30UJA11002	H	H	SII	NS-AQ	C/NM	Y (4)	Y (5)
RCP-M Oil Coll Tk Drain Vlv Loop 1	30JEB10AA409	30UJA11002	H	H	SII	NS-AQ	C/NM	Y (4)	Y (5)
RCP-M Oil Col Tk Flame Arrestor Loop 1	30JEB10AV503	30UJA11002	H	H	SII	NS-AQ	C/NM	Y (4)	Y (5)
RCP-M Lwr Brg Oil Cooler Loop 1	30JEB10AC001	30UJA15002	H	H	SI	S			Y (5)
RCP-M Lwr Brg Oil Fill/Drain Vlv Loop 1	30JEB10AA401	30UJA11002	H	H	SI	S	C/NM	Y (4)	Y (5)
RCP-M Air Cooler #1 Loop 1	30JEB10AC002	30UJA15002	H	H	SI	S			Y (5)
RCP-M Cooler #1 Drain Vlv Loop 1	30JEB10AA402	30UJA11002	H	H	SI	S	C/NM	Y (4)	Y (5)
RCP-M Air Cooler #2 Loop 1	30JEB10AC003	30UJA15002	H	H	SI	S			Y (5)
RCP-M Cooler #2 Drain Vlv Loop 1	30JEB10AA403	30UJA11002	H	H	SI	S	C/NM	Y (4)	Y (5)
RCP-M Upr Brg Oil Cooler Loop 1	30JEB10AC004	30UJA15002	H	H	SI	S			Y (5)
RCP-M Upr Brg Water Drain Vlv Loop 1	30JEB10AA404	30UJA11002	H	H	SI	S	C/NM	Y (4)	Y (5)
RCP-M Upr Brg Oil Fill/Drain Vlv Loop 1	30JEB10AA405	30UJA11002	H	H	SI	S	C/NM	Y (4)	Y (5)
RCP-M Upr Brg Oil Sump Vlv Loop 1	30JEB10AA406	30UJA11002	H	H	SI	S	C/NM	Y (4)	Y (5)
RCP-M Windings Anti-Cond Heaters Loop 1	30JEB10AH501	30UJA23002	H	H	SII	NS-AQ			Y (5)
RCP TB Press Sensor Loop 1 (PB)	30JEB10CP002	30UJA11002	H	H	SI	S			Y (5)
RCP TB Temp Sensor Loop 1 (PB)	30JEB10CT007	30UJA11002	H	H	SI	S			Y (5)
RCP Seal #1 Diff Press Sensor #1 Loop 1 (PB)	30JEB10CP065	30UJA11002	H	H	SI	S			Y (5)
RCP Seal #1 Diff Press Sensor #2 Loop 1 (PB)	30JEB10CP567	30UJA18002	H	H	SI	S			Y (5)
RCP Seal #1 Temp Sensor #1 Loop 1 (PB)	30JEB10CT002	30UJA11002	H	H	SI	S			Y (5)
RCP Seal #1 Temp Sensor #2 Loop 1 (PB)	30JEB10CT003	30UJA11002	H	H	SI	S			Y (5)
RCP Seal #2 Tk Level Sensor #1 Loop 1 (PB)	30JEB10CL065	30UJA11002	H	H	SII	NS-AQ			Y (5)
RCP Seal #2 Tk Level Sensor #2 Loop 1 (PB)	30JEB10CL066	30UJA11002	H	H	SII	NS-AQ			Y (5)
RCP Seal #2 Leakoff Flowrate Sensor #1 Loop 1 (PB)	30JEB10CF063	30UJA11002	H	H	SII	NS-AQ			Y (5)
RCP Seal #2 Leakoff Flowrate Sensor #2 Loop 1 (PB)	30JEB10CF064	30UJA11002	H	H	SII	NS-AQ			Y (5)
RCP Seal #3 Tk Level Sensor #1 Loop 1 (PB)	30JEB10CL057	30UJA11002	H	H	SII	NS-AQ			Y (5)
RCP Seal #3 Tk Level Sensor #2 Loop 1 (PB)	30JEB10CL061	30UJA11002	H	H	SII	NS-AQ			Y (5)

Table 3.10-1—List of Seismically and Dynamically Qualified Mechanical and Electrical Equipment (Sheet 24 of 197)

Name Tag (Equipment Description)	Tag Number	Local Area KKS ID (Room Location)	EQ Environment (Note 1)	Radiation Environment Zone (Note 2)	EQ Designated Function (Note 3)	Safety Class (Note 4)	EQ Program Designation (Note 5)
RCP SSSS Position Sensor #1 Loop 1 (M)	30JEB10CG050A	30UJA11002	H	H	SII	NS-AQ	Y (5)
RCP SSSS Position Sensor #2 Loop 1 (M)	30JEB10CG050B	30UJA11002	H	H	SII	NS-AQ	Y (5)
RCP-M Diff Current Sensor #1 Loop 1 (M)	30JEB10CE089	30UJA18002	H	H	SII	NS-AQ	Y (5)
RCP-M Diff Current Sensor #2 Loop 1 (M)	30JEB10CE090	30UJA18002	H	H	SII	NS-AQ	Y (5)
RCP-M Diff Current Sensor #3 Loop 1 (M)	30JEB10CE091	30UJA18002	H	H	SII	NS-AQ	Y (5)
RCP-M Current Sensor #1 Loop 1 (M)	30JEB10CE889	31UJK18027	M	M	SI	S	Y (5)
RCP-M Current Sensor #2 Loop 1 (M)	30JEB10CE890	31UJK18027	M	M	SI	S	Y (5)
RCP-M Current Sensor #3 Loop 1 (M)	30JEB10CE891	31UJK18027	M	M	SI	S	Y (5)
RCP-M Speed Sensor Loop 1 (M)	30JEB10CS896	30UJA18002	H	H	SI	S	Y (5)
RCP-M Speed Sensor - Standby Loop 1 (M)	30JEB10CS897	30UJA18002	H	H	SI	S	Y (5)
RCP-M Winding Temp Sensor #1 Loop 1 (M)	30JEB10CT069	30UJA18002	H	H	SII	NS-AQ	Y (5)
RCP-M Winding Temp Sensor #2 Loop 1 (M)	30JEB10CT070	30UJA18002	H	H	SII	NS-AQ	Y (5)
RCP-M Winding Temp Sensor #3 Loop 1 (M)	30JEB10CT071	30UJA18002	H	H	SII	NS-AQ	Y (5)
RCP-M Lwr Oil Tank Temp Sensor Loop 1 (PB)	30JEB10CT585	30UJA18002	H	H	SII	NS-AQ	Y (5)
RCP-M Lwr Brg Oil Level Sensor #1 Loop 1 (PB)	30JEB10CL051	30UJA18002	H	H	SI	S	Y (5)
RCP-M Lwr Brg Oil Level Sensor #2 Loop 1 (PB)	30JEB10CL501	30UJA18002	H	H	SI	S	Y (5)
RCP-M Lwr Rad Brg Temp Sensor #1 Loop 1 (M)	30JEB10CT075	30UJA18002	H	H	SII	NS-AQ	Y (5)
RCP-M Lwr Rad Brg Temp Sensor #2 Loop 1 (M)	30JEB10CT084	30UJA18002	H	H	SII	NS-AQ	Y (5)
RCP-M Lwr Thr Brg Temp Sensor #1 Loop 1 (M)	30JEB10CT080	30UJA18002	H	H	SII	NS-AQ	Y (5)
RCP-M Lwr Thr Brg Temp Sensor #2 Loop 1 (M)	30JEB10CT081	30UJA18002	H	H	SII	NS-AQ	Y (5)
RCP-M Upr Oil Tk Temp Sensor Loop 1 (PB)	30JEB10CT504	30UJA18002	H	H	SII	NS-AQ	Y (5)
RCP-M Upr Brg Oil Level Sensor #1 Loop 1 (PB)	30JEB10CL055	30UJA18002	H	H	SI	S	Y (5)
RCP-M Upr Brg Oil Level Sensor #2 Loop 1 (PB)	30JEB10CL503	30UJA18002	H	H	SI	S	Y (5)
RCP-M Upr Rad Brg Temp Sensor #1 Loop 1 (M)	30JEB10CT076	30UJA18002	H	H	SII	NS-AQ	Y (5)
RCP-M Upr Rad Brg Temp Sensor #2 Loop 1 (M)	30JEB10CT077	30UJA18002	H	H	SII	NS-AQ	Y (5)

Table 3.10-1—List of Seismically and Dynamically Qualified Mechanical and Electrical Equipment (Sheet 25 of 197)

Name Tag (Equipment Description)	Tag Number	Local Area KKS ID (Room Location)	EQ Environment (Note 1)	Radiation Environment Zone (Note 2)	EQ Designated Function (Note 3)	Safety Class (Note 4)		EQ Program Designation (Note 5)	
RCP-M Upr Thr Brg Temp Sensor #1 Loop 1 (M)	30JEB10CT078	30UJA18002	H	H	SII	NS-AQ			Y (5)
RCP-M Upr Thr Brg Temp Sensor #2 Loop 1 M)	30JEB10CT079	30UJA18002	H	H	SII	NS-AQ			Y (5)
RCP-M Oil Press Sensor #1 Loop 1 (PB)	30JEB10CP099	30UJA18002	H	H	SI	S			Y (5)
RCP-M Oil Press Sensor #2 Loop 1 (PB)	30JEB10CP505	30UJA18002	H	H	SI	S			Y (5)
RCP-M Oil Coll Tk Level Sensor Loop 1 (PB)	30JEB10CL056	30UJA18002	H	H	SII	NS-AQ			Y (5)
RCP, Loop 2									
Reactor Coolant Pump Loop 2	30JEB20AP001	30UJA11005	H	H	SI	S	C/NM	Y (4)	Y (5)
TB Inlet Cooling Water Vlv Loop 2	30JEB20AA021	30UJA15005	H	H	SI	S	C/NM	Y (4)	Y (5)
TB Inlet Water Check Vlv Loop 2	30JEB20AA001	30UJA15005	H	H	SI	S	C/NM	Y (4)	Y (5)
TB Outlet Water Throttle Vlv Loop 2	30JEB20AA002	30UJA15005	H	H	SI	S	C/NM	Y (4)	Y (5)
TB Outlet Cooling Water Vlv Loop 2	30JEB20AA003	30UJA15005	H	H	SI	S	C/NM	Y (4)	Y (5)
TB Cooling Water Relief Vlv Loop 2	30JEB20AA191	30UJA15005	H	H	SI	S	C/NM	Y (4)	Y (5)
TB Cooling Water Press Vlv Loop 2	30JEB20AA302	30UJA15005	H	H	SI	S	C/NM	Y (4)	Y (5)
RCP Seal #1 Sweeping Vlv #1 Loop 2	30JEB20AA006	30UJA34014	H	H	SI	S	C/NM	Y (4)	Y (5)
RCP Seal #1 Sweeping Vlv #2 Loop 2	30JEB20AA029	30UJA34014	H	H	SI	S	C/NM	Y (4)	Y (5)
RCP Seal #1 Inject Vlv #1 Loop 2	30JEB20AA005	30UJA15005	H	H	SI	S	C/NM	Y (4)	Y (5)
RCP Seal #1 Inject Vlv #2 Loop 2	30JEB20AA004	30UJA15005	H	H	SI	S	C/NM	Y (4)	Y (5)
RCP Seal #1 Injec Bypass Vlv #1 Loop 2	30JEB20AA007	30UJA18005	H	H	SI	S	C/NM	Y (4)	Y (5)
RCP Seal #1 Injec Bypass Vlv #2 Loop 2	30JEB20AA008	30UJA18005	H	H	SI	S	C/NM	Y (4)	Y (5)
RCP Seal #1 Inject Drain Vlv #1 Loop 2	30JEB20AA410	30UJA15005	H	H	SI	S	C/NM	Y (4)	Y (5)
RCP Seal #1 Inject Drain Vlv #2 Loop 2	30JEB20AA412	30UJA15005	H	H	SI	S	C/NM	Y (4)	Y (5)
RCP Seal #1 Inject Drain Vlv #3 Loop 2	30JEB20AA411	30UJA15005	H	H	SI	S	C/NM	Y (4)	Y (5)
RCP Seal #1 Leakoff Vlv Loop 2	30JEB20AA009	30UJA18005	H	H	SI	S	C/NM	Y (4)	Y (5)
RCP Seal #1 Leakoff Drain Vlv #1 Loop 2	30JEB20AA501	30UJA18005	H	H	SI	S	C/NM	Y (4)	Y (5)
RCP Seal #1 Leakoff Drain Vlv #2 Loop 2	30JEB20AA502	30UJA18005	H	H	SI	S	C/NM	Y (4)	Y (5)
RCP Seal #1 Diff Press Vlv #1 Loop 2	30JEB20AA303	30UJA15005	H	H	SI	S	C/NM	Y (4)	Y (5)
RCP Seal #1 Diff Press Vlv #2 Loop 2	30JEB20AA304	30UJA18005	H	H	SI	S	C/NM	Y (4)	Y (5)
RCP Seal #2 Leakoff Tank Loop 2	30JEB20BB002	30UJA18004	H	H	SII	NS-AQ			Y (5)
RCP Seal #2 Tk Water Makeup Vlv Loop 2	30JEB20AA022	30UJA18004	H	H	SII	NS-AQ	C/NM	Y (4)	Y (5)
RCP Seal #2 Tk Water Flow Restr Loop 2	30JEB20BP023	30UJA18004	H	H	SII	NS-AQ			Y (5)
RCP Seal #2 Tk Level Lwr Vlv Loop 2	30JEB20AA312	30UJA18004	H	H	SII	NS-AQ	C/NM	Y (4)	Y (5)

Table 3.10-1—List of Seismically and Dynamically Qualified Mechanical and Electrical Equipment (Sheet 26 of 197)

Name Tag (Equipment Description)	Tag Number	Local Area KKS ID (Room Location)	EQ Environment (Note 1)	Radiation Environment Zone (Note 2)	EQ Designated Function (Note 3)	Safety Class (Note 4)		EQ Program Designation (Note 5)	
RCP Seal #2 Tk Level Upr Vlv Loop 2	30JEB20AA311	30UJA18004	H	H	SII	NS-AQ	C/NM	Y (4)	Y (5)
RCP Seal #2 Leakoff Vlv Loop 2	30JEB20AA010	30UJA15005	H	H	SII	NS-AQ	C/NM	Y (4)	Y (5)
RCP Seal #2 Leakoff Drain Vlv #1 Loop 2	30JEB20AA407	30UJA15005	H	H	SII	NS-AQ	C/NM	Y (4)	Y (5)
RCP Seal #2 Leakoff Drain Vlv #2 Loop 2	30JEB20AA408	30UJA15005	H	H	SII	NS-AQ	C/NM	Y (4)	Y (5)
RCP Seal #2 NR Flow Sensr Byp Vlv Loop 2	30JEB20AA011	30UJA18004	H	H	SII	NS-AQ	C/NM	Y (4)	Y (5)
RCP Seal #2 NR Flowrate Vlv #1 Loop 2	30JEB20AA309	30UJA18004	H	H	SII	NS-AQ	C/NM	Y (4)	Y (5)
RCP Seal #2 NR Flowrate Vlv #2 Loop 2	30JEB20AA310	30UJA18004	H	H	SII	NS-AQ	C/NM	Y (4)	Y (5)
RCP Seal #2 WR Flowrate Vlv #1 Loop 2	30JEB20AA305	30UJA18004	H	H	SII	NS-AQ	C/NM	Y (4)	Y (5)
RCP Seal #2 WR Flowrate Vlv #2 Loop 2	30JEB20AA306	30UJA18004	H	H	SII	NS-AQ	C/NM	Y (4)	Y (5)
RCP Seal #3 Inject Vlv Loop 2	30JEB20AA013	30UJA34014	H	H	SII	NS-AQ	C/NM	Y (4)	Y (5)
RCP Seal #3 Inject Control Vlv Loop 2	30JEB20AA014	30UJA34014	H	H	SII	NS-AQ	C/NM	Y (4)	Y (5)
RCP Seal #3 Inject Check Vlv #1 Loop 2	30JEB20AA015	30UJA34014	H	H	SII	NS-AQ	C/NM	Y (4)	Y (5)
RCP Seal #3 Inject Check Vlv #2 Loop 2	30JEB20AA016	30UJA18005	H	H	SII	NS-AQ	C/NM	Y (4)	Y (5)
RCP Seal #3 Injection Tank Loop 2	30JEB20BB001	30UJA34014	H	H	SII	NS-AQ			Y (5)
RCP Seal #3 Tk Level Lwr Vlv Loop 2	30JEB20AA308	30UJA34014	H	H	SII	NS-AQ	C/NM	Y (4)	Y (5)
RCP Seal #3 Tk Level Upr Vlv Loop 2	30JEB20AA307	30UJA34014	H	H	SII	NS-AQ	C/NM	Y (4)	Y (5)
RCP Seal #3 Leakoff Vlv Loop 2	30JEB20AA017	30UJA15014	H	H	SII	NS-AQ	C/NM	Y (4)	Y (5)
SSSS Actuation Vlv Loop 2	30JEB20AA018	30UJA15005	H	H	SII	NS-AQ	C/NM	Y (4)	Y (5)
SSSS Nitrogen Accum Tank Loop 2	30JEB20BB003	30UJA15005	H	H	SII	NS-AQ			Y (5)
SSSS Nitrogen High Press Vlv Loop 2	30JEB20AA019	30UJA15005	H	H	SII	NS-AQ	C/NM	Y (4)	Y (5)
SSSS Nitrogen Low Press Vlv Loop 2	30JEB20AA026	30UJA15005	H	H	SII	NS-AQ	C/NM	Y (4)	Y (5)
SSSS Atmospheric Vent Vlv Loop 2	30JEB20AA020	30UJA15005	H	H	SII	NS-AQ	C/NM	Y (4)	Y (5)
RCP-M Oil Lift Pump Loop 2	30JEB20AP011	30UJA18005	H	H	SI	S	C/NM	Y (4)	Y (5)
RCP-M Oil Lift Pump Suct Vlv Loop 2	30JEB20AA030	30UJA18005	H	H	SI	S	C/NM	Y (4)	Y (5)
RCP-M Oil Lift Pump Suct Filter Loop 2	30JEB20AT021	30UJA18005	H	H	SI	S	C/NM	Y (4)	Y (5)
RCP-M Oil Lift Pump Relief Vlv Loop 2	30JEB20AA192	30UJA18005	H	H	SI	S	C/NM	Y (4)	Y (5)
RCP-M Oil Lift Pump Disch Filter Loop 2	30JEB20AT031	30UJA18005	H	H	SI	S	C/NM	Y (4)	Y (5)
RCP-M Oil Coll Tank Loop 2	30JEB20BB004	30UJA11005	H	H	SII	NS-AQ			Y (5)
RCP-M Oil Coll Tk Level Lwr Vlv Loop 2	30JEB20AA314	30UJA11005	H	H	SII	NS-AQ	C/NM	Y (4)	Y (5)
RCP-M Oil Coll Tk Level Upr Vlv Loop 2	30JEB20AA313	30UJA11005	H	H	SII	NS-AQ	C/NM	Y (4)	Y (5)
RCP-M Oil Coll Tk Drain Vlv Loop 2	30JEB20AA409	30UJA11005	H	H	SII	NS-AQ	C/NM	Y (4)	Y (5)
RCP-M Oil Col Tk Flame Arrestor Loop 2	30JEB20AV503	30UJA11005	H	H	SII	NS-AQ	C/NM	Y (4)	Y (5)
RCP-M Lwr Brg Oil Cooler Loop 2	30JEB20AC001	30UJA15005	H	H	SI	S			Y (5)

Table 3.10-1—List of Seismically and Dynamically Qualified Mechanical and Electrical Equipment (Sheet 27 of 197)

Name Tag (Equipment Description)	Tag Number	Local Area KKS ID (Room Location)	EQ Environment (Note 1)	Radiation Environment Zone (Note 2)	EQ Designated Function (Note 3)	Safety Class (Note 4)	EQ Program Designation (Note 5)
RCP-M Lwr Brg Oil Fill/Drain Vlv Loop 2	30JEB20AA401	30UJA11005	H	H	SI	S C/NM	Y (4) Y (5)
RCP-M Air Cooler #1 Loop 2	30JEB20AC002	30UJA15005	H	H	SI	S	Y (5)
RCP-M Cooler #1 Drain Vlv Loop 2	30JEB20AA402	30UJA11005	H	H	SI	S C/NM	Y (4) Y (5)
RCP-M Air Cooler #2 Loop 2	30JEB20AC003	30UJA15005	H	H	SI	S	Y (5)
RCP-M Cooler #2 Drain Vlv Loop 2	30JEB20AA403	30UJA11005	H	H	SI	S C/NM	Y (4) Y (5)
RCP-M Upr Brg Oil Cooler Loop 2	30JEB20AC004	30UJA15005	H	H	SI	S	Y (5)
RCP-M Upr Brg Water Drain Vlv Loop 2	30JEB20AA404	30UJA11005	H	H	SI	S C/NM	Y (4) Y (5)
RCP-M Upr Brg Oil Fill/Drain Vlv Loop 2	30JEB20AA405	30UJA11005	H	H	SI	S C/NM	Y (4) Y (5)
RCP-M Upr Brg Oil Sump Vlv Loop 2	30JEB20AA406	30UJA11005	H	H	SI	S C/NM	Y (4) Y (5)
RCP-M Windings Anti-Cond Heaters Loop 2	30JEB20AH501	30UJA23005	H	H	SII	NS-AQ	Y (5)
RCP TB Press Sensor Loop 2 (PB)	30JEB20CP002	30UJA11005	H	H	SI	S	Y (5)
RCP TB Temp Sensor Loop 2 (PB)	30JEB20CT007	30UJA11005	H	H	SI	S	Y (5)
RCP Seal #1 Diff Press Sensor #1 Loop 2 (PB)	30JEB20CP065	30UJA11005	H	H	SI	S	Y (5)
RCP Seal #1 Diff Press Sensor #2 Loop 2 (PB)	30JEB20CP567	30UJA18005	H	H	SI	S	Y (5)
RCP Seal #1 Temp Sensor #1 Loop 2 (PB)	30JEB20CT002	30UJA11005	H	H	SI	S	Y (5)
RCP Seal #1 Temp Sensor #2 Loop 2 (PB)	30JEB20CT003	30UJA11005	H	H	SI	S	Y (5)
RCP Seal #2 Tk Level Sensor #1 Loop 2 (PB)	30JEB20CL065	30UJA11005	H	H	SII	NS-AQ	Y (5)
RCP Seal #2 Tk Level Sensor #2 Loop 2 (PB)	30JEB20CL066	30UJA11005	H	H	SII	NS-AQ	Y (5)
RCP Seal #2 Leakoff Flowrate Sensor #1 Loop 2 (PB)	30JEB20CF063	30UJA11005	H	H	SII	NS-AQ	Y (5)
RCP Seal #2 Leakoff Flowrate Sensor #2 Loop 2 (PB)	30JEB20CF064	30UJA11005	H	H	SII	NS-AQ	Y (5)
RCP Seal #3 Tk Level Sensor #1 Loop 2 (PB)	30JEB20CL057	30UJA11005	H	H	SII	NS-AQ	Y (5)
RCP Seal #3 Tk Level Sensor #2 Loop 2 (PB)	30JEB20CL061	30UJA11005	H	H	SII	NS-AQ	Y (5)
RCP SSSS Position Sensor #1 Loop 2 (M)	30JEB20CG050A	30UJA11005	H	H	SII	NS-AQ	Y (5)
RCP SSSS Position Sensor #2 Loop 2 (M)	30JEB20CG050B	30UJA11005	H	H	SII	NS-AQ	Y (5)
RCP-M Diff Current Sensor #1 Loop 2 (M)	30JEB20CE089	30UJA18005	H	H	SII	NS-AQ	Y (5)
RCP-M Diff Current Sensor #2 Loop 2 (M)	30JEB20CE090	30UJA18005	H	H	SII	NS-AQ	Y (5)
RCP-M Diff Current Sensor #3 Loop 2 (M)	30JEB20CE091	30UJA18005	H	H	SII	NS-AQ	Y (5)
RCP-M Current Sensor #1 Loop 2 (M)	30JEB20CE889	32UJK18020	M	M	SI	S	Y (5)
RCP-M Current Sensor #2 Loop 2 (M)	30JEB20CE890	32UJK18020	M	M	SI	S	Y (5)
RCP-M Current Sensor #3 Loop 2 (M)	30JEB20CE891	32UJK18020	M	M	SI	S	Y (5)
RCP-M Speed Sensor Loop 2 (M)	30JEB20CS896	30UJA18005	H	H	SI	S	Y (5)

Table 3.10-1—List of Seismically and Dynamically Qualified Mechanical and Electrical Equipment (Sheet 28 of 197)

Name Tag (Equipment Description)	Tag Number	Local Area KKS ID (Room Location)	EQ Environment (Note 1)	Radiation Environment Zone (Note 2)	EQ Designated Function (Note 3)	Safety Class (Note 4)	EQ Program Designation (Note 5)
RCP-M Speed Sensor - Standby Loop 2 (M)	30JEB20CS897	30UJA18005	H	H	SI	S	Y (5)
RCP-M Winding Temp Sensor #1 Loop 2 (M)	30JEB20CT069	30UJA18005	H	H	SII	NS-AQ	Y (5)
RCP-M Winding Temp Sensor #2 Loop 2 (M)	30JEB20CT070	30UJA18005	H	H	SII	NS-AQ	Y (5)
RCP-M Winding Temp Sensor #3 Loop 2 (M)	30JEB20CT071	30UJA18005	H	H	SII	NS-AQ	Y (5)
RCP-M Lwr Oil Tank Temp Sensor Loop 2 (PB)	30JEB20CT585	30UJA18005	H	H	SII	NS-AQ	Y (5)
RCP-M Lwr Brg Oil Level Sensor #1 Loop 2 (PB)	30JEB20CL051	30UJA18005	H	H	SI	S	Y (5)
RCP-M Lwr Brg Oil Level Sensor #2 Loop 2 (PB)	30JEB20CL501	30UJA18005	H	H	SI	S	Y (5)
RCP-M Lwr Rad Brg Temp Sensor #1 Loop 2 (M)	30JEB20CT075	30UJA18005	H	H	SII	NS-AQ	Y (5)
RCP-M Lwr Rad Brg Temp Sensor #2 Loop 2 (M)	30JEB20CT084	30UJA18005	H	H	SII	NS-AQ	Y (5)
RCP-M Lwr Thr Brg Temp Sensor #1 Loop 2 (M)	30JEB20CT080	30UJA18005	H	H	SII	NS-AQ	Y (5)
RCP-M Lwr Thr Brg Temp Sensor #2 Loop 2 (M)	30JEB20CT081	30UJA18005	H	H	SII	NS-AQ	Y (5)
RCP-M Upr Oil Tk Temp Sensor Loop 2 (PB)	30JEB20CT504	30UJA18005	H	H	SII	NS-AQ	Y (5)
RCP-M Upr Brg Oil Level Sensor #1 Loop 2 (PB)	30JEB20CL055	30UJA18005	H	H	SI	S	Y (5)
RCP-M Upr Brg Oil Level Sensor #2 Loop 2 (PB)	30JEB20CL503	30UJA18005	H	H	SI	S	Y (5)
RCP-M Upr Rad Brg Temp Sensor #1 Loop 2 (M)	30JEB20CT076	30UJA18005	H	H	SII	NS-AQ	Y (5)
RCP-M Upr Rad Brg Temp Sensor #2 Loop 2 (M)	30JEB20CT077	30UJA18005	H	H	SII	NS-AQ	Y (5)
RCP-M Upr Thr Brg Temp Sensor #1 Loop 2 (M)	30JEB20CT078	30UJA18005	H	H	SII	NS-AQ	Y (5)
RCP-M Upr Thr Brg Temp Sensor #2 Loop 2 (M)	30JEB20CT079	30UJA18005	H	H	SII	NS-AQ	Y (5)
RCP-M Oil Press Sensor #1 Loop 2 (PB)	30JEB20CP099	30UJA18005	H	H	SI	S	Y (5)
RCP-M Oil Press Sensor #2 Loop 2 (PB)	30JEB20CP505	30UJA18005	H	H	SI	S	Y (5)
RCP-M Oil Coll Tk Level Sensor Loop 2 (PB)	30JEB20CL056	30UJA18005	H	H	SII	NS-AQ	Y (5)
RCP, Loop 3							
Reactor Coolant Pump Loop 3	30JEB30AP001	30UJA11006	H	H	SI	S C/NM	Y (4) Y (5)

Table 3.10-1—List of Seismically and Dynamically Qualified Mechanical and Electrical Equipment (Sheet 29 of 197)

Name Tag (Equipment Description)	Tag Number	Local Area KKS ID (Room Location)	EQ Environment (Note 1)	Radiation Environment Zone (Note 2)	EQ Designated Function (Note 3)	Safety Class (Note 4)		EQ Program Designation (Note 5)	
TB Inlet Cooling Water Vlv Loop 3	30JEB30AA021	30UJA15006	H	H	SI	S	C/NM	Y (4)	Y (5)
TB Inlet Water Check Vlv Loop 3	30JEB30AA001	30UJA15006	H	H	SI	S	C/NM	Y (4)	Y (5)
TB Outlet Water Throttle Vlv Loop 3	30JEB30AA002	30UJA15006	H	H	SI	S	C/NM	Y (4)	Y (5)
TB Outlet Cooling Water Vlv Loop 3	30JEB30AA003	30UJA15006	H	H	SI	S	C/NM	Y (4)	Y (5)
TB Cooling Water Relief Vlv Loop 3	30JEB30AA191	30UJA15006	H	H	SI	S	C/NM	Y (4)	Y (5)
TB Cooling Water Press Vlv Loop 3	30JEB30AA302	30UJA15006	H	H	SI	S	C/NM	Y (4)	Y (5)
RCP Seal #1 Sweeping Vlv #1 Loop 3	30JEB30AA006	30UJA34015	H	H	SI	S	C/NM	Y (4)	Y (5)
RCP Seal #1 Sweeping Vlv #2 Loop 3	30JEB30AA029	30UJA34015	H	H	SI	S	C/NM	Y (4)	Y (5)
RCP Seal #1 Inject Vlv #1 Loop 3	30JEB30AA005	30UJA15006	H	H	SI	S	C/NM	Y (4)	Y (5)
RCP Seal #1 Inject Vlv #2 Loop 3	30JEB30AA004	30UJA15006	H	H	SI	S	C/NM	Y (4)	Y (5)
RCP Seal #1 Injec Bypass Vlv #1 Loop 3	30JEB30AA007	30UJA18006	H	H	SI	S	C/NM	Y (4)	Y (5)
RCP Seal #1 Injec Bypass Vlv #2 Loop 3	30JEB30AA008	30UJA18006	H	H	SI	S	C/NM	Y (4)	Y (5)
RCP Seal #1 Inject Drain Vlv #1 Loop 3	30JEB30AA410	30UJA15006	H	H	SI	S	C/NM	Y (4)	Y (5)
RCP Seal #1 Inject Drain Vlv #2 Loop 3	30JEB30AA412	30UJA15006	H	H	SI	S	C/NM	Y (4)	Y (5)
RCP Seal #1 Inject Drain Vlv #3 Loop 3	30JEB30AA411	30UJA15006	H	H	SI	S	C/NM	Y (4)	Y (5)
RCP Seal #1 Leakoff Vlv Loop 3	30JEB30AA009	30UJA18006	H	H	SI	S	C/NM	Y (4)	Y (5)
RCP Seal #1 Leakoff Drain Vlv #1 Loop 3	30JEB30AA501	30UJA18006	H	H	SI	S	C/NM	Y (4)	Y (5)
RCP Seal #1 Leakoff Drain Vlv #2 Loop 3	30JEB30AA502	30UJA18006	H	H	SI	S	C/NM	Y (4)	Y (5)
RCP Seal #1 Diff Press Vlv #1 Loop 3	30JEB30AA303	30UJA15006	H	H	SI	S	C/NM	Y (4)	Y (5)
RCP Seal #1 Diff Press Vlv #2 Loop 3	30JEB30AA304	30UJA18006	H	H	SI	S	C/NM	Y (4)	Y (5)
RCP Seal #2 Leakoff Tank Loop 3	30JEB30BB002	30UJA18007	H	H	SII	NS-AQ			Y (5)
RCP Seal #2 Tk Water Makeup Vlv Loop 3	30JEB30AA022	30UJA18007	H	H	SII	NS-AQ	C/NM	Y (4)	Y (5)
RCP Seal #2 Tk Water Flow Restr Loop 3	30JEB30BP023	30UJA18007	H	H	SII	NS-AQ			Y (5)
RCP Seal #2 Tk Level Lwr Vlv Loop 3	30JEB30AA312	30UJA18007	H	H	SII	NS-AQ	C/NM	Y (4)	Y (5)
RCP Seal #2 Tk Level Upr Vlv Loop 3	30JEB30AA311	30UJA18007	H	H	SII	NS-AQ	C/NM	Y (4)	Y (5)
RCP Seal #2 Leakoff Vlv Loop 3	30JEB30AA010	30UJA18006	H	H	SII	NS-AQ	C/NM	Y (4)	Y (5)
RCP Seal #2 Leakoff Drain Vlv #1 Loop 3	30JEB30AA407	30UJA15006	H	H	SII	NS-AQ	C/NM	Y (4)	Y (5)
RCP Seal #2 Leakoff Drain Vlv #2 Loop 3	30JEB30AA408	30UJA15006	H	H	SII	NS-AQ	C/NM	Y (4)	Y (5)
RCP Seal #2 NR Flow Sensr Byp Vlv Loop 3	30JEB30AA011	30UJA18007	H	H	SII	NS-AQ	C/NM	Y (4)	Y (5)
RCP Seal #2 NR Flowrate Vlv #1 Loop 3	30JEB30AA309	30UJA18007	H	H	SII	NS-AQ	C/NM	Y (4)	Y (5)
RCP Seal #2 NR Flowrate Vlv #2 Loop 3	30JEB30AA310	30UJA18007	H	H	SII	NS-AQ	C/NM	Y (4)	Y (5)
RCP Seal #2 WR Flowrate Vlv #1 Loop 3	30JEB30AA305	30UJA18007	H	H	SII	NS-AQ	C/NM	Y (4)	Y (5)
RCP Seal #2 WR Flowrate Vlv #2 Loop 3	30JEB30AA306	30UJA18007	H	H	SII	NS-AQ	C/NM	Y (4)	Y (5)

Table 3.10-1—List of Seismically and Dynamically Qualified Mechanical and Electrical Equipment (Sheet 30 of 197)

Name Tag (Equipment Description)	Tag Number	Local Area KKS ID (Room Location)	EQ Environment (Note 1)	Radiation Environment Zone (Note 2)	EQ Designated Function (Note 3)	Safety Class (Note 4)		EQ Program Designation (Note 5)	
RCP Seal #3 Inject Vlv Loop 3	30JEB30AA013	30UJA34015	H	H	SII	NS-AQ	C/NM	Y (4)	Y (5)
RCP Seal #3 Inject Control Vlv Loop 3	30JEB30AA014	30UJA34015	H	H	SII	NS-AQ	C/NM	Y (4)	Y (5)
RCP Seal #3 Inject Check Vlv #1 Loop 3	30JEB30AA015	30UJA34015	H	H	SII	NS-AQ	C/NM	Y (4)	Y (5)
RCP Seal #3 Inject Check Vlv #2 Loop 3	30JEB30AA016	30UJA18006	H	H	SII	NS-AQ	C/NM	Y (4)	Y (5)
RCP Seal #3 Injection Tank Loop 3	30JEB30BB001	30UJA34015	H	H	SII	NS-AQ			Y (5)
RCP Seal #3 Tk Level Lwr Vlv Loop 3	30JEB30AA308	30UJA34015	H	H	SII	NS-AQ	C/NM	Y (4)	Y (5)
RCP Seal #3 Tk Level Upr Vlv Loop 3	30JEB30AA307	30UJA34015	H	H	SII	NS-AQ	C/NM	Y (4)	Y (5)
RCP Seal #3 Leakoff Vlv Loop 3	30JEB30AA017	30UJA15015	H	H	SII	NS-AQ	C/NM	Y (4)	Y (5)
SSSS Actuation Vlv Loop 3	30JEB30AA018	30UJA15006	H	H	SII	NS-AQ	C/NM	Y (4)	Y (5)
SSSS Nitrogen Accum Tank Loop 3	30JEB30BB003	30UJA15006	H	H	SII	NS-AQ			Y (5)
SSSS Nitrogen High Press Vlv Loop 3	30JEB30AA019	30UJA15006	H	H	SII	NS-AQ	C/NM	Y (4)	Y (5)
SSSS Nitrogen Low Press Vlv Loop 3	30JEB30AA026	30UJA15006	H	H	SII	NS-AQ	C/NM	Y (4)	Y (5)
SSSS Atmospheric Vent Vlv Loop 3	30JEB30AA020	30UJA15006	H	H	SII	NS-AQ	C/NM	Y (4)	Y (5)
RCP-M Oil Lift Pump Loop 3	30JEB30AP011	30UJA18006	H	H	SI	S	C/NM	Y (4)	Y (5)
RCP-M Oil Lift Pump Suct Vlv Loop 3	30JEB30AA030	30UJA18006	H	H	SI	S	C/NM	Y (4)	Y (5)
RCP-M Oil Lift Pump Suct Filter Loop 3	30JEB30AT021	30UJA18006	H	H	SI	S	C/NM	Y (4)	Y (5)
RCP-M Oil Lift Pump Relief Vlv Loop 3	30JEB30AA192	30UJA18006	H	H	SI	S	C/NM	Y (4)	Y (5)
RCP-M Oil Lift Pump Disch Filter Loop 3	30JEB30AT031	30UJA18006	H	H	SI	S	C/NM	Y (4)	Y (5)
RCP-M Oil Coll Tank Loop 3	30JEB30BB004	30UJA11006	H	H	SII	NS-AQ			Y (5)
RCP-M Oil Coll Tk Level Lwr Vlv Loop 3	30JEB30AA314	30UJA11006	H	H	SII	NS-AQ	C/NM	Y (4)	Y (5)
RCP-M Oil Coll Tk Level Upr Vlv Loop 3	30JEB30AA313	30UJA11006	H	H	SII	NS-AQ	C/NM	Y (4)	Y (5)
RCP-M Oil Coll Tk Drain Vlv Loop 3	30JEB30AA409	30UJA11006	H	H	SII	NS-AQ	C/NM	Y (4)	Y (5)
RCP-M Oil Col Tk Flame Arrestor Loop 3	30JEB30AV503	30UJA11006	H	H	SII	NS-AQ	C/NM	Y (4)	Y (5)
RCP-M Lwr Brg Oil Cooler Loop 3	30JEB30AC001	30UJA15006	H	H	SI	S			Y (5)
RCP-M Lwr Brg Oil Fill/Drain Vlv Loop 3	30JEB30AA401	30UJA11006	H	H	SI	S	C/NM	Y (4)	Y (5)
RCP-M Air Cooler #1 Loop 3	30JEB30AC002	30UJA15006	H	H	SI	S			Y (5)
RCP-M Cooler #1 Drain Vlv Loop 3	30JEB30AA402	30UJA11006	H	H	SI	S	C/NM	Y (4)	Y (5)
RCP-M Air Cooler #2 Loop 3	30JEB30AC003	30UJA15006	H	H	SI	S			Y (5)
RCP-M Cooler #2 Drain Vlv Loop 3	30JEB30AA403	30UJA11006	H	H	SI	S	C/NM	Y (4)	Y (5)
RCP-M Upr Brg Oil Cooler Loop 3	30JEB30AC004	30UJA15006	H	H	SI	S			Y (5)
RCP-M Upr Brg Water Drain Vlv Loop 3	30JEB30AA404	30UJA11006	H	H	SI	S	C/NM	Y (4)	Y (5)
RCP-M Upr Brg Oil Fill/Drain Vlv Loop 3	30JEB30AA405	30UJA11006	H	H	SI	S	C/NM	Y (4)	Y (5)
RCP-M Upr Brg Oil Sump Vlv Loop 3	30JEB30AA406	30UJA11006	H	H	SI	S	C/NM	Y (4)	Y (5)

Table 3.10-1—List of Seismically and Dynamically Qualified Mechanical and Electrical Equipment (Sheet 31 of 197)

Name Tag (Equipment Description)	Tag Number	Local Area KKS ID (Room Location)	EQ Environment (Note 1)	Radiation Environment Zone (Note 2)	EQ Designated Function (Note 3)	Safety Class (Note 4)	EQ Program Designation (Note 5)
RCP-M Windings Anti-Cond Heaters Loop 3	30JEB30AH501	30UJA23006	H	H	SII	NS-AQ	Y (5)
RCP TB Press Sensor Loop 3 (PB)	30JEB30CP002	30UJA11006	H	H	SI	S	Y (5)
RCP TB Temp Sensor Loop 3 (PB)	30JEB30CT007	30UJA11006	H	H	SI	S	Y (5)
RCP Seal #1 Diff Press Sensor #1 Loop 3 (PB)	30JEB30CP065	30UJA11006	H	H	SI	S	Y (5)
RCP Seal #1 Diff Press Sensor #2 Loop 3 (PB)	30JEB30CP567	30UJA18006	H	H	SI	S	Y (5)
RCP Seal #1 Temp Sensor #1 Loop 3 (PB)	30JEB30CT002	30UJA11006	H	H	SI	S	Y (5)
RCP Seal #1 Temp Sensor #2 Loop 3 (PB)	30JEB30CT003	30UJA11006	H	H	SI	S	Y (5)
RCP Seal #2 Tk Level Sensor #1 Loop 3 (PB)	30JEB30CL065	30UJA11006	H	H	SII	NS-AQ	Y (5)
RCP Seal #2 Tk Level Sensor #2 Loop 3 (PB)	30JEB30CL066	30UJA11006	H	H	SII	NS-AQ	Y (5)
RCP Seal #2 Leakoff Flowrate Sensor #1 Loop 3 (PB)	30JEB30CF063	30UJA11006	H	H	SII	NS-AQ	Y (5)
RCP Seal #2 Leakoff Flowrate Sensor #2 Loop 3 (PB)	30JEB30CF064	30UJA11006	H	H	SII	NS-AQ	Y (5)
RCP Seal #3 Tk Level Sensor #1 Loop 3 (PB)	30JEB30CL057	30UJA11006	H	H	SII	NS-AQ	Y (5)
RCP Seal #3 Tk Level Sensor #2 Loop 3 (PB)	30JEB30CL061	30UJA11006	H	H	SII	NS-AQ	Y (5)
RCP SSSS Position Sensor #1 Loop 3 (M)	30JEB30CG050A	30UJA11006	H	H	SII	NS-AQ	Y (5)
RCP SSSS Position Sensor #2 Loop 3 (M)	30JEB30CG050B	30UJA11006	H	H	SII	NS-AQ	Y (5)
RCP-M Diff Current Sensor #1 Loop 3 (M)	30JEB30CE089	30UJA18006	H	H	SII	NS-AQ	Y (5)
RCP-M Diff Current Sensor #2 Loop 3 (M)	30JEB30CE090	30UJA18006	H	H	SII	NS-AQ	Y (5)
RCP-M Diff Current Sensor #3 Loop 3 (M)	30JEB30CE091	30UJA18006	H	H	SII	NS-AQ	Y (5)
RCP-M Current Sensor #1 Loop 3 (M)	30JEB30CE889	33UJK18020	M	M	SI	S	Y (5)
RCP-M Current Sensor #2 Loop 3 (M)	30JEB30CE890	33UJK18020	M	M	SI	S	Y (5)
RCP-M Current Sensor #3 Loop 3 (M)	30JEB30CE891	33UJK18020	M	M	SI	S	Y (5)
RCP-M Speed Sensor Loop 3 (M)	30JEB30CS896	30UJA18006	H	H	SI	S	Y (5)
RCP-M Speed Sensor - Standby Loop 3 (M)	30JEB30CS897	30UJA18006	H	H	SI	S	Y (5)
RCP-M Winding Temp Sensor #1 Loop 3 (M)	30JEB30CT069	30UJA18006	H	H	SII	NS-AQ	Y (5)
RCP-M Winding Temp Sensor #2 Loop 3 (M)	30JEB30CT070	30UJA18006	H	H	SII	NS-AQ	Y (5)
RCP-M Winding Temp Sensor #3 Loop 3 (M)	30JEB30CT071	30UJA18006	H	H	SII	NS-AQ	Y (5)
RCP-M Lwr Oil Tank Temp Sensor Loop 3 (PB)	30JEB30CT585	30UJA18006	H	H	SII	NS-AQ	Y (5)
RCP-M Lwr Brg Oil Level Sensor #1 Loop 3 (PB)	30JEB30CL051	30UJA18006	H	H	SI	S	Y (5)
RCP-M Lwr Brg Oil Level Sensor #2 Loop 3 (PB)	30JEB30CL501	30UJA18006	H	H	SI	S	Y (5)

Table 3.10-1—List of Seismically and Dynamically Qualified Mechanical and Electrical Equipment (Sheet 32 of 197)

Name Tag (Equipment Description)	Tag Number	Local Area KKS ID (Room Location)	EQ Environment (Note 1)	Radiation Environment Zone (Note 2)	EQ Designated Function (Note 3)	Safety Class (Note 4)	EQ Program Designation (Note 5)
RCP-M Lwr Rad Brg Temp Sensor #1 Loop 3 (M)	30JEB30CT075	30UJA18006	H	H	SII	NS-AQ	Y (5)
RCP-M Lwr Rad Brg Temp Sensor #2 Loop 3 (M)	30JEB30CT084	30UJA18006	H	H	SII	NS-AQ	Y (5)
RCP-M Lwr Thr Brg Temp Sensor #1 Loop 3 (M)	30JEB30CT080	30UJA18006	H	H	SII	NS-AQ	Y (5)
RCP-M Lwr Thr Brg Temp Sensor #2 Loop 3 (M)	30JEB30CT081	30UJA18006	H	H	SII	NS-AQ	Y (5)
RCP-M Upr Oil Tk Temp Sensor Loop 3 (PB)	30JEB30CT504	30UJA18006	H	H	SII	NS-AQ	Y (5)
RCP-M Upr Brg Oil Level Sensor #1 Loop 3 (PB)	30JEB30CL055	30UJA18006	H	H	SI	S	Y (5)
RCP-M Upr Brg Oil Level Sensor #2 Loop 3 (PB)	30JEB30CL503	30UJA18006	H	H	SI	S	Y (5)
RCP-M Upr Rad Brg Temp Sensor #1 Loop 3 (M)	30JEB30CT076	30UJA18006	H	H	SII	NS-AQ	Y (5)
RCP-M Upr Rad Brg Temp Sensor #2 Loop 3 (M)	30JEB30CT077	30UJA18006	H	H	SII	NS-AQ	Y (5)
RCP-M Upr Thr Brg Temp Sensor #1 Loop 3 (M)	30JEB30CT078	30UJA18006	H	H	SII	NS-AQ	Y (5)
RCP-M Upr Thr Brg Temp Sensor #2 Loop 3 (M)	30JEB30CT079	30UJA18006	H	H	SII	NS-AQ	Y (5)
RCP-M Oil Press Sensor #1 Loop 3 (PB)	30JEB30CP099	30UJA18006	H	H	SI	S	Y (5)
RCP-M Oil Press Sensor #2 Loop 3 (PB)	30JEB30CP505	30UJA18006	H	H	SI	S	Y (5)
RCP-M Oil Coll Tk Level Sensor Loop 3 (PB)	30JEB30CL056	30UJA18006	H	H	SII	NS-AQ	Y (5)
RCP, Loop 4							
Reactor Coolant Pump Loop 4	30JEB40AP001	30UJA11009	H	H	SI	S C/NM	Y (4) Y (5)
TB Inlet Cooling Water Vlv Loop 4	30JEB40AA021	30UJA15009	H	H	SI	S C/NM	Y (4) Y (5)
TB Inlet Water Check Vlv Loop 4	30JEB40AA001	30UJA15009	H	H	SI	S C/NM	Y (4) Y (5)
TB Outlet Water Throttle Vlv Loop 4	30JEB40AA002	30UJA15009	H	H	SI	S C/NM	Y (4) Y (5)
TB Outlet Cooling Water Vlv Loop 4	30JEB40AA003	30UJA15009	H	H	SI	S C/NM	Y (4) Y (5)
TB Cooling Water Relief Vlv Loop 4	30JEB40AA191	30UJA15009	H	H	SI	S C/NM	Y (4) Y (5)
TB Cooling Water Press Vlv Loop 4	30JEB40AA302	30UJA15009	H	H	SI	S C/NM	Y (4) Y (5)
RCP Seal #1 Sweeping Vlv #1 Loop 4	30JEB40AA006	30UJA29016	H	H	SI	S C/NM	Y (4) Y (5)
RCP Seal #1 Sweeping Vlv #2 Loop 4	30JEB40AA029	30UJA29016	H	H	SI	S C/NM	Y (4) Y (5)

Table 3.10-1—List of Seismically and Dynamically Qualified Mechanical and Electrical Equipment (Sheet 33 of 197)

Name Tag (Equipment Description)	Tag Number	Local Area KKS ID (Room Location)	EQ Environment (Note 1)	Radiation Environment Zone (Note 2)	EQ Designated Function (Note 3)	Safety Class (Note 4)		EQ Program Designation (Note 5)	
RCP Seal #1 Inject Vlv #1 Loop 4	30JEB40AA005	30UJA15009	H	H	SI	S	C/NM	Y (4)	Y (5)
RCP Seal #1 Inject Vlv #2 Loop 4	30JEB40AA004	30UJA15009	H	H	SI	S	C/NM	Y (4)	Y (5)
RCP Seal #1 Injec Bypass Vlv #1 Loop 4	30JEB40AA007	30UJA18009	H	H	SI	S	C/NM	Y (4)	Y (5)
RCP Seal #1 Injec Bypass Vlv #2 Loop 4	30JEB40AA008	30UJA18009	H	H	SI	S	C/NM	Y (4)	Y (5)
RCP Seal #1 Inject Drain Vlv #1 Loop 4	30JEB40AA410	30UJA15009	H	H	SI	S	C/NM	Y (4)	Y (5)
RCP Seal #1 Inject Drain Vlv #2 Loop 4	30JEB40AA412	30UJA15009	H	H	SI	S	C/NM	Y (4)	Y (5)
RCP Seal #1 Inject Drain Vlv #3 Loop 4	30JEB40AA411	30UJA15009	H	H	SI	S	C/NM	Y (4)	Y (5)
RCP Seal #1 Leakoff Vlv Loop 4	30JEB40AA009	30UJA18009	H	H	SI	S	C/NM	Y (4)	Y (5)
RCP Seal #1 Leakoff Drain Vlv #1 Loop 4	30JEB40AA501	30UJA18009	H	H	SI	S	C/NM	Y (4)	Y (5)
RCP Seal #1 Leakoff Drain Vlv #2 Loop 4	30JEB40AA502	30UJA18009	H	H	SI	S	C/NM	Y (4)	Y (5)
RCP Seal #1 Diff Press Vlv #1 Loop 4	30JEB40AA303	30UJA15009	H	H	SI	S	C/NM	Y (4)	Y (5)
RCP Seal #1 Diff Press Vlv #2 Loop 4	30JEB40AA304	30UJA18009	H	H	SI	S	C/NM	Y (4)	Y (5)
RCP Seal #2 Leakoff Tank Loop 4	30JEB40BB002	30UJA18008	H	H	SII	NS-AQ			Y (5)
RCP Seal #2 Tk Water Makeup Vlv Loop 4	30JEB40AA022	30UJA18008	H	H	SII	NS-AQ	C/NM	Y (4)	Y (5)
RCP Seal #2 Tk Water Flow Restr Loop 4	30JEB40BP023	30UJA18008	H	H	SII	NS-AQ			Y (5)
RCP Seal #2 Tk Level Lwr Vlv Loop 4	30JEB40AA312	30UJA18008	H	H	SII	NS-AQ	C/NM	Y (4)	Y (5)
RCP Seal #2 Tk Level Upr Vlv Loop 4	30JEB40AA311	30UJA18008	H	H	SII	NS-AQ	C/NM	Y (4)	Y (5)
RCP Seal #2 Leakoff Vlv Loop 4	30JEB40AA010	30UJA18009	H	H	SII	NS-AQ	C/NM	Y (4)	Y (5)
RCP Seal #2 Leakoff Drain Vlv #1 Loop 4	30JEB40AA407	30UJA15009	H	H	SII	NS-AQ	C/NM	Y (4)	Y (5)
RCP Seal #2 Leakoff Drain Vlv #2 Loop 4	30JEB40AA408	30UJA15009	H	H	SII	NS-AQ	C/NM	Y (4)	Y (5)
RCP Seal #2 NR Flow Sensr Byp Vlv Loop 4	30JEB40AA011	30UJA18008	H	H	SII	NS-AQ	C/NM	Y (4)	Y (5)
RCP Seal #2 NR Flowrate Vlv #1 Loop 4	30JEB40AA309	30UJA18008	H	H	SII	NS-AQ	C/NM	Y (4)	Y (5)
RCP Seal #2 NR Flowrate Vlv #2 Loop 4	30JEB40AA310	30UJA18008	H	H	SII	NS-AQ	C/NM	Y (4)	Y (5)
RCP Seal #2 WR Flowrate Vlv #1 Loop 4	30JEB40AA305	30UJA18008	H	H	SII	NS-AQ	C/NM	Y (4)	Y (5)
RCP Seal #2 WR Flowrate Vlv #2 Loop 4	30JEB40AA306	30UJA18008	H	H	SII	NS-AQ	C/NM	Y (4)	Y (5)
RCP Seal #3 Inject Vlv Loop 4	30JEB40AA013	30UJA29016	H	H	SII	NS-AQ	C/NM	Y (4)	Y (5)
RCP Seal #3 Inject Control Vlv Loop 4	30JEB40AA014	30UJA29016	H	H	SII	NS-AQ	C/NM	Y (4)	Y (5)
RCP Seal #3 Inject Check Vlv #1 Loop 4	30JEB40AA015	30UJA29016	H	H	SII	NS-AQ	C/NM	Y (4)	Y (5)
RCP Seal #3 Inject Check Vlv #2 Loop 4	30JEB40AA016	30UJA18009	H	H	SII	NS-AQ	C/NM	Y (4)	Y (5)
RCP Seal #3 Injection Tank Loop 4	30JEB40BB001	30UJA29016	H	H	SII	NS-AQ			Y (5)
RCP Seal #3 Tk Level Lwr Vlv Loop 4	30JEB40AA308	30UJA29016	H	H	SII	NS-AQ	C/NM	Y (4)	Y (5)
RCP Seal #3 Tk Level Upr Vlv Loop 4	30JEB40AA307	30UJA29016	H	H	SII	NS-AQ	C/NM	Y (4)	Y (5)
RCP Seal #3 Leakoff Vlv Loop 4	30JEB40AA017	30UJA15016	H	H	SII	NS-AQ	C/NM	Y (4)	Y (5)

Table 3.10-1—List of Seismically and Dynamically Qualified Mechanical and Electrical Equipment (Sheet 34 of 197)

Name Tag (Equipment Description)	Tag Number	Local Area KKS ID (Room Location)	EQ Environment (Note 1)	Radiation Environment Zone (Note 2)	EQ Designated Function (Note 3)	Safety Class (Note 4)		EQ Program Designation (Note 5)	
SSSS Actuation Vlv Loop 4	30JEB40AA018	30UJA15009	H	H	SII	NS-AQ	C/NM	Y (4)	Y (5)
SSSS Nitrogen Accum Tank Loop 4	30JEB40BB003	30UJA15009	H	H	SII	NS-AQ			Y (5)
SSSS Nitrogen High Press Vlv Loop 4	30JEB40AA019	30UJA15009	H	H	SII	NS-AQ	C/NM	Y (4)	Y (5)
SSSS Nitrogen Low Press Vlv Loop 4	30JEB40AA026	30UJA15009	H	H	SII	NS-AQ	C/NM	Y (4)	Y (5)
SSSS Atmospheric Vent Vlv Loop 4	30JEB40AA020	30UJA15009	H	H	SII	NS-AQ	C/NM	Y (4)	Y (5)
RCP-M Oil Lift Pump Loop 4	30JEB40AP011	30UJA18009	H	H	SI	S	C/NM	Y (4)	Y (5)
RCP-M Oil Lift Pump Suct Vlv Loop 4	30JEB40AA030	30UJA18009	H	H	SI	S	C/NM	Y (4)	Y (5)
RCP-M Oil Lift Pump Suct Filter Loop 4	30JEB40AT021	30UJA18009	H	H	SI	S	C/NM	Y (4)	Y (5)
RCP-M Oil Lift Pump Relief Vlv Loop 4	30JEB40AA192	30UJA18009	H	H	SI	S	C/NM	Y (4)	Y (5)
RCP-M Oil Lift Pump Disch Filter Loop 4	30JEB40AT031	30UJA18009	H	H	SI	S	C/NM	Y (4)	Y (5)
RCP-M Oil Coll Tank Loop 4	30JEB40BB004	30UJA11009	H	H	SII	NS-AQ			Y (5)
RCP-M Oil Coll Tk Level Lwr Vlv Loop 4	30JEB40AA314	30UJA18009	H	H	SII	NS-AQ	C/NM	Y (4)	Y (5)
RCP-M Oil Coll Tk Level Upr Vlv Loop 4	30JEB40AA313	30UJA18009	H	H	SII	NS-AQ	C/NM	Y (4)	Y (5)
RCP-M Oil Coll Tk Drain Vlv Loop 4	30JEB40AA409	30UJA18009	H	H	SII	NS-AQ	C/NM	Y (4)	Y (5)
RCP-M Oil Col Tk Flame Arrestor Loop 4	30JEB40AV503	30UJA11009	H	H	SII	NS-AQ	C/NM	Y (4)	Y (5)
RCP-M Lwr Brg Oil Cooler Loop 4	30JEB40AC001	30UJA15009	H	H	SI	S			Y (5)
RCP-M Lwr Brg Oil Fill/Drain Vlv Loop 4	30JEB40AA401	30UJA11009	H	H	SI	S	C/NM	Y (4)	Y (5)
RCP-M Air Cooler #1 Loop 4	30JEB40AC002	30UJA15009	H	H	SI	S			Y (5)
RCP-M Cooler #1 Drain Vlv Loop 4	30JEB40AA402	30UJA11009	H	H	SI	S	C/NM	Y (4)	Y (5)
RCP-M Air Cooler #2 Loop 4	30JEB40AC003	30UJA15009	H	H	SI	S			Y (5)
RCP-M Cooler #2 Drain Vlv Loop 4	30JEB40AA403	30UJA11009	H	H	SI	S	C/NM	Y (4)	Y (5)
RCP-M Upr Brg Oil Cooler Loop 4	30JEB40AC004	30UJA15009	H	H	SI	S			Y (5)
RCP-M Upr Brg Water Drain Vlv Loop 4	30JEB40AA404	30UJA11009	H	H	SI	S	C/NM	Y (4)	Y (5)
RCP-M Upr Brg Oil Fill/Drain Vlv Loop 4	30JEB40AA405	30UJA11009	H	H	SI	S	C/NM	Y (4)	Y (5)
RCP-M Upr Brg Oil Sump Vlv Loop 4	30JEB40AA406	30UJA11009	H	H	SI	S	C/NM	Y (4)	Y (5)
RCP-M Windings Anti-Cond Heaters Loop 4	30JEB40AH501	30UJA23009	H	H	SII	NS-AQ			Y (5)
RCP TB Press Sensor Loop 4 (PB)	30JEB40CP002	30UJA11009	H	H	SI	S			Y (5)
RCP TB Temp Sensor Loop 4 (PB)	30JEB40CT007	30UJA11009	H	H	SI	S			Y (5)
RCP Seal #1 Diff Press Sensor #1 Loop 4 (PB)	30JEB40CP065	30UJA11009	H	H	SI	S			Y (5)
RCP Seal #1 Diff Press Sensor #2 Loop 4 (PB)	30JEB40CP567	30UJA18009	H	H	SI	S			Y (5)
RCP Seal #1 Temp Sensor #1 Loop 4 (PB)	30JEB40CT002	30UJA11009	H	H	SI	S			Y (5)
RCP Seal #1 Temp Sensor #2 Loop 4 (PB)	30JEB40CT003	30UJA11009	H	H	SI	S			Y (5)
RCP Seal #2 Tk Level Sensor #1 Loop 4 (PB)	30JEB40CL065	30UJA11009	H	H	SII	NS-AQ			Y (5)

Table 3.10-1—List of Seismically and Dynamically Qualified Mechanical and Electrical Equipment (Sheet 35 of 197)

Name Tag (Equipment Description)	Tag Number	Local Area KKS ID (Room Location)	EQ Environment (Note 1)	Radiation Environment Zone (Note 2)	EQ Designated Function (Note 3)	Safety Class (Note 4)	EQ Program Designation (Note 5)
RCP Seal #2 Tk Level Sensor #2 Loop 4 (PB)	30JEB40CL066	30UJA11009	H	H	SII	NS-AQ	Y (5)
RCP Seal #2 Leakoff Flowrate Sensor #1 Loop 4 (PB)	30JEB40CF063	30UJA11009	H	H	SII	NS-AQ	Y (5)
RCP Seal #2 Leakoff Flowrate Sensor #2 Loop 4 (PB)	30JEB40CF064	30UJA11009	H	H	SII	NS-AQ	Y (5)
RCP Seal #3 Tk Level Sensor #1 Loop 4 (PB)	30JEB40CL057	30UJA11009	H	H	SII	NS-AQ	Y (5)
RCP Seal #3 Tk Level Sensor #2 Loop 4 (PB)	30JEB40CL061	30UJA11009	H	H	SII	NS-AQ	Y (5)
RCP SSSS Position Sensor #1 Loop 4 (M)	30JEB40CG050A	30UJA11009	H	H	SII	NS-AQ	Y (5)
RCP SSSS Position Sensor #2 Loop 4 (M)	30JEB40CG050B	30UJA11009	H	H	SII	NS-AQ	Y (5)
RCP-M Diff Current Sensor #1 Loop 4 (M)	30JEB40CE089	30UJA18009	H	H	SII	NS-AQ	Y (5)
RCP-M Diff Current Sensor #2 Loop 4 (M)	30JEB40CE090	30UJA18009	H	H	SII	NS-AQ	Y (5)
RCP-M Diff Current Sensor #3 Loop 4 (M)	30JEB40CE091	30UJA18009	H	H	SII	NS-AQ	Y (5)
RCP-M Current Sensor #1 Loop 4 (M)	30JEB40CE889	34UJK18027	M	M	SI	S	Y (5)
RCP-M Current Sensor #2 Loop 4 (M)	30JEB40CE890	34UJK18027	M	M	SI	S	Y (5)
RCP-M Current Sensor #3 Loop 4 (M)	30JEB40CE891	34UJK18027	M	M	SI	S	Y (5)
RCP-M Speed Sensor Loop 4 (M)	30JEB40CS896	30UJA18009	H	H	SI	S	Y (5)
RCP-M Speed Sensor - Standby Loop 4 (M)	30JEB40CS897	30UJA18009	H	H	SI	S	Y (5)
RCP-M Winding Temp Sensor #1 Loop 4 (M)	30JEB40CT069	30UJA18009	H	H	SII	NS-AQ	Y (5)
RCP-M Winding Temp Sensor #2 Loop 4 (M)	30JEB40CT070	30UJA18009	H	H	SII	NS-AQ	Y (5)
RCP-M Winding Temp Sensor #3 Loop 4 (M)	30JEB40CT071	30UJA18009	H	H	SII	NS-AQ	Y (5)
RCP-M Lwr Oil Tank Temp Sensor Loop 4 (PB)	30JEB40CT585	30UJA18009	H	H	SII	NS-AQ	Y (5)
RCP-M Lwr Brg Oil Level Sensor #1 Loop 4 (PB)	30JEB40CL051	30UJA18009	H	H	SI	S	Y (5)
RCP-M Lwr Brg Oil Level Sensor #2 Loop 4 (PB)	30JEB40CL501	30UJA18009	H	H	SI	S	Y (5)
RCP-M Lwr Rad Brg Temp Sensor #1 Loop 4 (M)	30JEB40CT075	30UJA18009	H	H	SII	NS-AQ	Y (5)
RCP-M Lwr Rad Brg Temp Sensor #2 Loop 4 (M)	30JEB40CT084	30UJA18009	H	H	SII	NS-AQ	Y (5)
RCP-M Lwr Thr Brg Temp Sensor #1 Loop 4 (M)	30JEB40CT080	30UJA18009	H	H	SII	NS-AQ	Y (5)
RCP-M Lwr Thr Brg Temp Sensor #2 Loop 4 (M)	30JEB40CT081	30UJA18009	H	H	SII	NS-AQ	Y (5)
RCP-M Upr Oil Tk Temp Sensor Loop 4 (PB)	30JEB40CT504	30UJA18009	H	H	SII	NS-AQ	Y (5)

Table 3.10-1—List of Seismically and Dynamically Qualified Mechanical and Electrical Equipment (Sheet 36 of 197)

Name Tag (Equipment Description)	Tag Number	Local Area KKS ID (Room Location)	EQ Environment (Note 1)	Radiation Environment Zone (Note 2)	EQ Designated Function (Note 3)	Safety Class (Note 4)		EQ Program Designation (Note 5)	
RCP-M Upr Brg Oil Level Sensor #1 Loop 4 (PB)	30JEB40CL055	30UJA18009	H	H	SI	S			Y (5)
RCP-M Upr Brg Oil Level Sensor #2 Loop 4 (PB)	30JEB40CL503	30UJA18009	H	H	SI	S			Y (5)
RCP-M Upr Rad Brg Temp Sensor #1 Loop 4 (M)	30JEB40CT076	30UJA18009	H	H	SII	NS-AQ			Y (5)
RCP-M Upr Rad Brg Temp Sensor #2 Loop 4 (M)	30JEB40CT077	30UJA18009	H	H	SII	NS-AQ			Y (5)
RCP-M Upr Thr Brg Temp Sensor #1 Loop 4 (M)	30JEB40CT078	30UJA18009	H	H	SII	NS-AQ			Y (5)
RCP-M Upr Thr Brg Temp Sensor #2 Loop 4 (M)	30JEB40CT079	30UJA18009	H	H	SII	NS-AQ			Y (5)
RCP-M Oil Press Sensor #1 Loop 4 (PB)	30JEB40CP099	30UJA18009	H	H	SI	S			Y (5)
RCP-M Oil Press Sensor #2 Loop 4 (PB)	30JEB40CP505	30UJA18009	H	H	SI	S			Y (5)
RCP-M Oil Coll Tk Level Sensor Loop 4 (PB)	30JEB40CL056	30UJA18009	H	H	SII	NS-AQ			Y (5)
Reactor Coolant Loop 1									
H/L Level Instr Lower Vlv Loop 1	30JEC10AA303	30UJA15003	H	H	SI	S	C/NM	Y (4)	Y (5)
H/L Level Instr Upper Vlv Loop 1	30JEC10AA302	30UJA15003	H	H	SI	S	C/NM	Y (4)	Y (5)
Flowrate Instr Outer Radius Vlv Loop 1	30JEC10AA305	30UJA15003	H	H	SI	S	C/NM	Y (4)	Y (5)
Flowrate Instr Inner Rad Vlv #1 Loop 1	30JEC10AA304	30UJA15003	H	H	SI	S	C/NM	Y (4)	Y (5)
Flowrate Instr Inner Rad Vlv #2 Loop 1	30JEC10AA306	30UJA15003	H	H	SI	S	C/NM	Y (4)	Y (5)
Flowrate Instr Inner Rad Vlv #3 Loop 1	30JEC10AA307	30UJA15003	H	H	SI	S	C/NM	Y (4)	Y (5)
Flowrate Instr Inner Rad Vlv #4 Loop 1	30JEC10AA308	30UJA15003	H	H	SI	S	C/NM	Y (4)	Y (5)
RCP Suction Press Instr Vlv #1 Loop 1	30JEC10AA310	30UJA15003	H	H	SI	S	C/NM	Y (4)	Y (5)
RCP Suction Press Instr Vlv #2 Loop 1	30JEC10AA312	30UJA15003	H	H	SI	S	C/NM	Y (4)	Y (5)
RCP Disch Press Instr Vlv #1 Loop 1	30JEC10AA311	30UJA15003	H	H	SI	S	C/NM	Y (4)	Y (5)
RCP Disch Press Instr Vlv #2 Loop 1	30JEC10AA313	30UJA15003	H	H	SI	S	C/NM	Y (4)	Y (5)
RCS Flowrate Sensor #1 Loop 1 (PB)	30JEC10CF815	30UJA15003	H	H	SI	S			Y (5)
RCS Flowrate Sensor #2 Loop 1 (PB)	30JEC10CF817	30UJA15003	H	H	SI	S			Y (5)
RCS Flowrate Sensor #3 Loop 1 (PB)	30JEC10CF819	30UJA15003	H	H	SI	S			Y (5)
RCS Flowrate Sensor #4 Loop 1 (PB)	30JEC10CF821	30UJA15003	H	H	SI	S			Y (5)
RCS Loop Level Sensor Loop 1 (PB)	30JEC10CL823	30UJA15003	H	H	SI	S			Y (5)
RCP Delta P Sensor #1 Loop 1 (PB)	30JEC10CP801	30UJA15003	H	H	SI	S			Y (5)
RCP Delta P Sensor #2 Loop 1 (PB)	30JEC10CP802	30UJA15003	H	H	SI	S			Y (5)

Table 3.10-1—List of Seismically and Dynamically Qualified Mechanical and Electrical Equipment (Sheet 37 of 197)

Name Tag (Equipment Description)	Tag Number	Local Area KKS ID (Room Location)	EQ Environment (Note 1)	Radiation Environment Zone (Note 2)	EQ Designated Function (Note 3)	Safety Class (Note 4)	EQ Program Designation (Note 5)
H/L NR Temp Sensor #1 Loop 1 (PB)	30JEC10CT801	30UJA15003	H	H	SI	S	Y (5)
H/L NR Temp Sensor #2 Loop 1 (PB)	30JEC10CT802	30UJA15003	H	H	SI	S	Y (5)
H/L NR Temp Sensor #3 Loop 1 (PB)	30JEC10CT803	30UJA15003	H	H	SI	S	Y (5)
H/L NR Temp Sensor #4 Loop 1 (PB)	30JEC10CT804	30UJA15003	H	H	SI	S	Y (5)
H/L WR Temp Sensor Loop 1 (PB)	30JEC10CT805	30UJA15003	H	H	PAM SI	S	Y (5)
C/L NR Temp Sensor #1 Loop 1 (PB)	30JEC10CT807	30UJA15002	H	H	SI	S	Y (5)
C/L NR Temp Sensor #2 Loop 1 (PB)	30JEC10CT808	30UJA15002	H	H	SI	S	Y (5)
C/L WR Temp Sensor Loop 1 (PB)	30JEC10CT811	30UJA15002	H	H	PAM SI	S	Y (5)
Reactor Coolant Loop 2							
H/L Level Instr Lower Vlv Loop 2	30JEC20AA303	30UJA15004	H	H	SI	S C/NM	Y (4) Y (5)
H/L Level Instr Upper Vlv Loop 2	30JEC20AA302	30UJA15004	H	H	SI	S C/NM	Y (4) Y (5)
Flowrate Instr Outer Radius Vlv Loop 2	30JEC20AA305	30UJA15004	H	H	SI	S C/NM	Y (4) Y (5)
Flowrate Instr Inner Rad Vlv #1 Loop 2	30JEC20AA304	30UJA15004	H	H	SI	S C/NM	Y (4) Y (5)
Flowrate Instr Inner Rad Vlv #2 Loop 2	30JEC20AA306	30UJA15004	H	H	SI	S C/NM	Y (4) Y (5)
Flowrate Instr Inner Rad Vlv #3 Loop 2	30JEC20AA307	30UJA15004	H	H	SI	S C/NM	Y (4) Y (5)
Flowrate Instr Inner Rad Vlv #4 Loop 2	30JEC20AA308	30UJA15004	H	H	SI	S C/NM	Y (4) Y (5)
RCP Suction Press Instr Vlv #1 Loop 2	30JEC20AA310	30UJA15004	H	H	SI	S C/NM	Y (4) Y (5)
RCP Suction Press Instr Vlv #2 Loop 2	30JEC20AA312	30UJA15004	H	H	SI	S C/NM	Y (4) Y (5)
RCP Disch Press Instr Vlv #1 Loop 2	30JEC20AA311	30UJA15004	H	H	SI	S C/NM	Y (4) Y (5)
RCP Disch Press Instr Vlv #2 Loop 2	30JEC20AA313	30UJA15004	H	H	SI	S C/NM	Y (4) Y (5)
RCS Flowrate Sensor #1 Loop 2 (PB)	30JEC20CF815	30UJA15004	H	H	SI	S	Y (5)
RCS Flowrate Sensor #2 Loop 2 (PB)	30JEC20CF817	30UJA15004	H	H	SI	S	Y (5)
RCS Flowrate Sensor #3 Loop 2 (PB)	30JEC20CF819	30UJA15004	H	H	SI	S	Y (5)
RCS Flowrate Sensor #4 Loop 2 (PB)	30JEC20CF821	30UJA15004	H	H	SI	S	Y (5)
RCS Loop Level Sensor Loop 2 (PB)	30JEC20CL823	30UJA15004	H	H	SI	S	Y (5)
RCP Delta P Sensor #1 Loop 2 (PB)	30JEC20CP801	30UJA15004	H	H	SI	S	Y (5)
RCP Delta P Sensor #2 Loop 2 (PB)	30JEC20CP802	30UJA15004	H	H	SI	S	Y (5)
H/L NR Temp Sensor #1 Loop 2 (PB)	30JEC20CT801	30UJA15004	H	H	SI	S	Y (5)
H/L NR Temp Sensor #2 Loop 2 (PB)	30JEC20CT802	30UJA15004	H	H	SI	S	Y (5)
H/L NR Temp Sensor #3 Loop 2 (PB)	30JEC20CT803	30UJA15004	H	H	SI	S	Y (5)
H/L NR Temp Sensor #4 Loop 2 (PB)	30JEC20CT804	30UJA15004	H	H	SI	S	Y (5)
H/L WR Temp Sensor Loop 2 (PB)	30JEC20CT805	30UJA15004	H	H	PAM SI	S	Y (5)
C/L NR Temp Sensor #1 Loop 2 (PB)	30JEC20CT807	30UJA15005	H	H	SI	S	Y (5)

Table 3.10-1—List of Seismically and Dynamically Qualified Mechanical and Electrical Equipment (Sheet 38 of 197)

Name Tag (Equipment Description)	Tag Number	Local Area KKS ID (Room Location)	EQ Environment (Note 1)	Radiation Environment Zone (Note 2)	EQ Designated Function (Note 3)	Safety Class (Note 4)	EQ Program Designation (Note 5)
C/L NR Temp Sensor #2 Loop 2 (PB)	30JEC20CT808	30UJA15005	H	H	SI	S	Y (5)
C/L WR Temp Sensor Loop 2 (PB)	30JEC20CT811	30UJA15005	H	H	PAM SI	S	Y (5)
Reactor Coolant Loop 3							
H/L Level Instr Lower Vlv Loop 3	30JEC30AA303	30UJA15007	H	H	SI	S C/NM	Y (4) Y (5)
H/L Level Instr Upper Vlv Loop 3	30JEC30AA302	30UJA15007	H	H	SI	S C/NM	Y (4) Y (5)
Flowrate Instr Outer Radius Vlv Loop 3	30JEC30AA305	30UJA15007	H	H	SI	S C/NM	Y (4) Y (5)
Flowrate Instr Inner Rad Vlv #1 Loop 3	30JEC30AA304	30UJA15007	H	H	SI	S C/NM	Y (4) Y (5)
Flowrate Instr Inner Rad Vlv #2 Loop 3	30JEC30AA306	30UJA15007	H	H	SI	S C/NM	Y (4) Y (5)
Flowrate Instr Inner Rad Vlv #3 Loop 3	30JEC30AA307	30UJA15007	H	H	SI	S C/NM	Y (4) Y (5)
Flowrate Instr Inner Rad Vlv #4 Loop 3	30JEC30AA308	30UJA15007	H	H	SI	S C/NM	Y (4) Y (5)
RCP Suction Press Instr Vlv #1 Loop 3	30JEC30AA310	30UJA15007	H	H	SI	S C/NM	Y (4) Y (5)
RCP Suction Press Instr Vlv #2 Loop 3	30JEC30AA312	30UJA15007	H	H	SI	S C/NM	Y (4) Y (5)
RCP Disch Press Instr Vlv #1 Loop 3	30JEC30AA311	30UJA15007	H	H	SI	S C/NM	Y (4) Y (5)
RCP Disch Press Instr Vlv #2 Loop 3	30JEC30AA313	30UJA15007	H	H	SI	S C/NM	Y (4) Y (5)
RCS Flowrate Sensor #1 Loop 3 (PB)	30JEC30CF815	30UJA15007	H	H	SI	S	Y (5)
RCS Flowrate Sensor #2 Loop 3 (PB)	30JEC30CF817	30UJA15007	H	H	SI	S	Y (5)
RCS Flowrate Sensor #3 Loop 3 (PB)	30JEC30CF819	30UJA15007	H	H	SI	S	Y (5)
RCS Flowrate Sensor #4 Loop 3 (PB)	30JEC30CF821	30UJA15007	H	H	SI	S	Y (5)
RCS Loop Level Sensor Loop 3 (PB)	30JEC30CL823	30UJA15007	H	H	SI	S	Y (5)
RCP Delta P Sensor #1 Loop 3 (PB)	30JEC30CP801	30UJA15007	H	H	SI	S	Y (5)
RCP Delta P Sensor #2 Loop 3 (PB)	30JEC30CP802	30UJA15007	H	H	SI	S	Y (5)
H/L NR Temp Sensor #1 Loop 3 (PB)	30JEC30CT801	30UJA15007	H	H	SI	S	Y (5)
H/L NR Temp Sensor #2 Loop 3 (PB)	30JEC30CT802	30UJA15007	H	H	SI	S	Y (5)
H/L NR Temp Sensor #3 Loop 3 (PB)	30JEC30CT803	30UJA15007	H	H	SI	S	Y (5)
H/L NR Temp Sensor #4 Loop 3 (PB)	30JEC30CT804	30UJA15007	H	H	SI	S	Y (5)
H/L WR Temp Sensor Loop 3 (PB)	30JEC30CT805	30UJA15007	H	H	PAM SI	S	Y (5)
C/L NR Temp Sensor #1 Loop 3 (PB)	30JEC30CT807	30UJA15006	H	H	SI	S	Y (5)
C/L NR Temp Sensor #2 Loop 3 (PB)	30JEC30CT808	30UJA15006	H	H	SI	S	Y (5)
C/L WR Temp Sensor Loop 3 (PB)	30JEC30CT811	30UJA11006	H	H	PAM SI	S	Y (5)
PZR Surge Line Temp Sensor (PB)	30JEC30CT056	30UJA15007	H	H	SI	S	Y (5)
Reactor Coolant Loop 4							
H/L Level Instr Lower Vlv Loop 4	30JEC40AA303	30UJA15008	H	H	SI	S C/NM	Y (4) Y (5)

Table 3.10-1—List of Seismically and Dynamically Qualified Mechanical and Electrical Equipment (Sheet 39 of 197)

Name Tag (Equipment Description)	Tag Number	Local Area KKS ID (Room Location)	EQ Environment (Note 1)	Radiation Environment Zone (Note 2)	EQ Designated Function (Note 3)	Safety Class (Note 4)	EQ Program Designation (Note 5)
H/L Level Instr Upper Vlv Loop 4	30JEC40AA302	30UJA15008	H	H	SI	S C/NM	Y (4) Y (5)
Flowrate Instr Outer Radius Vlv Loop 4	30JEC40AA305	30UJA15008	H	H	SI	S C/NM	Y (4) Y (5)
Flowrate Instr Inner Rad Vlv #1 Loop 4	30JEC40AA304	30UJA15008	H	H	SI	S C/NM	Y (4) Y (5)
Flowrate Instr Inner Rad Vlv #2 Loop 4	30JEC40AA306	30UJA15008	H	H	SI	S C/NM	Y (4) Y (5)
Flowrate Instr Inner Rad Vlv #3 Loop 4	30JEC40AA307	30UJA15008	H	H	SI	S C/NM	Y (4) Y (5)
Flowrate Instr Inner Rad Vlv #4 Loop 4	30JEC40AA308	30UJA15008	H	H	SI	S C/NM	Y (4) Y (5)
RCP Suction Press Instr Vlv #1 Loop 4	30JEC40AA310	30UJA15008	H	H	SI	S C/NM	Y (4) Y (5)
RCP Suction Press Instr Vlv #2 Loop 4	30JEC40AA312	30UJA15008	H	H	SI	S C/NM	Y (4) Y (5)
RCP Disch Press Instr Vlv #1 Loop 4	30JEC40AA311	30UJA15008	H	H	SI	S C/NM	Y (4) Y (5)
RCP Disch Press Instr Vlv #2 Loop 4	30JEC40AA313	30UJA15008	H	H	SI	S C/NM	Y (4) Y (5)
RCS Flowrate Sensor #1 Loop 4 (PB)	30JEC40CF815	30UJA15008	H	H	SI	S	Y (5)
RCS Flowrate Sensor #2 Loop 4 (PB)	30JEC40CF817	30UJA15008	H	H	SI	S	Y (5)
RCS Flowrate Sensor #3 Loop 4 (PB)	30JEC40CF819	30UJA15008	H	H	SI	S	Y (5)
RCS Flowrate Sensor #4 Loop 4 (PB)	30JEC40CF821	30UJA15008	H	H	SI	S	Y (5)
RCS Loop Level Sensor Loop 4 (PB)	30JEC40CL823	30UJA15008	H	H	SI	S	Y (5)
RCP Delta P Sensor #1 Loop 4 (PB)	30JEC40CP801	30UJA15008	H	H	SI	S	Y (5)
RCP Delta P Sensor #2 Loop 4 (PB)	30JEC40CP802	30UJA15008	H	H	SI	S	Y (5)
H/L NR Temp Sensor #1 Loop 4 (PB)	30JEC40CT801	30UJA15008	H	H	SI	S	Y (5)
H/L NR Temp Sensor #2 Loop 4 (PB)	30JEC40CT802	30UJA15008	H	H	SI	S	Y (5)
H/L NR Temp Sensor #3 Loop 4 (PB)	30JEC40CT803	30UJA15008	H	H	SI	S	Y (5)
H/L NR Temp Sensor #4 Loop 4 (PB)	30JEC40CT804	30UJA15008	H	H	SI	S	Y (5)
H/L WR Temp Sensor Loop 4 (PB)	30JEC40CT805	30UJA15008	H	H	PAM SI	S	Y (5)
C/L NR Temp Sensor #1 Loop 4 (PB)	30JEC40CT807	30UJA15009	H	H	SI	S	Y (5)
C/L NR Temp Sensor #2 Loop 4 (PB)	30JEC40CT808	30UJA15009	H	H	SI	S	Y (5)
C/L WR Temp Sensor Loop 4 (PB)	30JEC40CT811	30UJA15009	H	H	PAM SI	S	Y (5)
Pressurizer							
Pressurizer	30JEF10BB001	30UJA23019	H	H	SI	S	Y (5)
PSRV #1	30JEF10AA191	30UJA34019	H	H	SI	S C/NM	Y (4) Y (5)
PSRV #1 Pilot Valve #1	30JEF10AA739	30UJA34019	H	H	SI	S C/NM	Y (4) Y (5)
PSRV #1 Pilot Valve #2	30JEF10AA740	30UJA34019	H	H	SI	S C/NM	Y (4) Y (5)
PSRV #1 Pilot #1 Impulse Vlv	30JEF10AA711	30UJA34019	H	H	SI	S C/NM	Y (4) Y (5)
PSRV #1 Pilot #2 Impulse Vlv	30JEF10AA712	30UJA34019	H	H	SI	S C/NM	Y (4) Y (5)
PSRV #1 Pilot Valve #1 Iso Valve	30JEF10AA715	30UJA34019	H	H	SI	S C/NM	Y (4) Y (5)

Table 3.10-1—List of Seismically and Dynamically Qualified Mechanical and Electrical Equipment (Sheet 40 of 197)

Name Tag (Equipment Description)	Tag Number	Local Area KKS ID (Room Location)	EQ Environment (Note 1)	Radiation Environment Zone (Note 2)	EQ Designated Function (Note 3)	Safety Class (Note 4)	EQ Program Designation (Note 5)
PSRV #1 Pilot Valve #2 Iso Valve	30JEF10AA716	30UJA34019	H	H	SI	S C/NM	Y (4) Y (5)
PSRV #1 Pilot Valve #1 Vent Valve	30JEF10AA713	30UJA34019	H	H	SI	S C/NM	Y (4) Y (5)
PSRV #1 Pilot Valve #2 Vent Valve	30JEF10AA714	30UJA34019	H	H	SI	S C/NM	Y (4) Y (5)
PSRV #1 SOV #1	30JEF10AA717	30UJA34019	H	H	SI	S C/NM	Y (4) Y (5)
PSRV #1 SOV #2	30JEF10AA718	30UJA34019	H	H	SI	S C/NM	Y (4) Y (5)
PSRV #2	30JEF10AA192	30UJA34019	H	H	SI	S C/NM	Y (4) Y (5)
PSRV #2 Pilot Valve #1	30JEF10AA741	30UJA34019	H	H	SI	S C/NM	Y (4) Y (5)
PSRV #2 Pilot Valve #2	30JEF10AA742	30UJA34019	H	H	SI	S C/NM	Y (4) Y (5)
PSRV #2 Pilot #1 Impulse Vlv	30JEF10AA721	30UJA34019	H	H	SI	S C/NM	Y (4) Y (5)
PSRV #2 Pilot #2 Impulse Vlv	30JEF10AA722	30UJA34019	H	H	SI	S C/NM	Y (4) Y (5)
PSRV #2 Pilot Valve #1 Iso Valve	30JEF10AA725	30UJA34019	H	H	SI	S C/NM	Y (4) Y (5)
PSRV #2 Pilot Valve #2 Iso Valve	30JEF10AA726	30UJA34019	H	H	SI	S C/NM	Y (4) Y (5)
PSRV #2 Pilot Valve #1 Vent Valve	30JEF10AA723	30UJA34019	H	H	SI	S C/NM	Y (4) Y (5)
PSRV #2 Pilot Valve #2 Vent Valve	30JEF10AA724	30UJA34019	H	H	SI	S C/NM	Y (4) Y (5)
PSRV #2 SOV #1	30JEF10AA727	30UJA34019	H	H	SI	S C/NM	Y (4) Y (5)
PSRV #2 SOV #2	30JEF10AA728	30UJA34019	H	H	SI	S C/NM	Y (4) Y (5)
PSRV #3	30JEF10AA193	30UJA34019	H	H	SI	S C/NM	Y (4) Y (5)
PSRV #3 Pilot Valve #1	30JEF10AA743	30UJA34019	H	H	SI	S C/NM	Y (4) Y (5)
PSRV #3 Pilot Valve #2	30JEF10AA744	30UJA34019	H	H	SI	S C/NM	Y (4) Y (5)
PSRV #3 Pilot #1 Impulse Vlv	30JEF10AA731	30UJA34019	H	H	SI	S C/NM	Y (4) Y (5)
PSRV #3 Pilot #2 Impulse Vlv	30JEF10AA732	30UJA34019	H	H	SI	S C/NM	Y (4) Y (5)
PSRV #3 Pilot Valve #1 Iso Valve	30JEF10AA735	30UJA34019	H	H	SI	S C/NM	Y (4) Y (5)
PSRV #3 Pilot Valve #2 Iso Valve	30JEF10AA736	30UJA34019	H	H	SI	S C/NM	Y (4) Y (5)
PSRV #3 Pilot Valve #1 Vent Valve	30JEF10AA733	30UJA34019	H	H	SI	S C/NM	Y (4) Y (5)
PSRV #3 Pilot Valve #2 Vent Valve	30JEF10AA734	30UJA34019	H	H	SI	S C/NM	Y (4) Y (5)
PSRV #3 SOV #1	30JEF10AA737	30UJA34019	H	H	SI	S C/NM	Y (4) Y (5)
PSRV #3 SOV #2	30JEF10AA738	30UJA34019	H	H	SI	S C/NM	Y (4) Y (5)
PDS Vlv #1	30JEF10AA004	30UJA34019	H	H	SI	S C/NM	Y (4) Y (5)
PDS Vlv #2	30JEF10AA005	30UJA34019	H	H	SI	S C/NM	Y (4) Y (5)
PDS Vlv #3	30JEF10AA006	30UJA34019	H	H	SI	S C/NM	Y (4) Y (5)
PDS Vlv #4	30JEF10AA007	30UJA34019	H	H	SI	S C/NM	Y (4) Y (5)
Bypass Vlv for PDS Vlv #1	30JEF10AA010	30UJA34019	H	H	SI	S C/NM	Y (4) Y (5)
Bypass Vlv for PDS Vlv #3	30JEF10AA009	30UJA34019	H	H	SI	S C/NM	Y (4) Y (5)

Table 3.10-1—List of Seismically and Dynamically Qualified Mechanical and Electrical Equipment (Sheet 41 of 197)

Name Tag (Equipment Description)	Tag Number	Local Area KKS ID (Room Location)	EQ Environment (Note 1)	Radiation Environment Zone (Note 2)	EQ Designated Function (Note 3)	Safety Class (Note 4)	EQ Program Designation (Note 5)
PZR Normal Spray Vlv Loop 2	30JEF10AA102	30UJA18018	H	H	SI	S C/NM	Y (4) Y (5)
PZR Normal Spray Vlv Loop 3	30JEF10AA103	30UJA18018	H	H	SI	S C/NM	Y (4) Y (5)
PZR Spray Bypass Vlv Loop 2	30JEF10AA002	30UJA18018	H	H	SI	S C/NM	Y (4) Y (5)
PZR Spray Bypass Vlv Loop 3	30JEF10AA003	30UJA18018	H	H	SI	S C/NM	Y (4) Y (5)
PZR Sampling Line Vlv	30JEF10AA601	30UJA18019	H	H	SI	S C/NM	Y (4) Y (5)
PZR Auxiliary Spray Check Vlv	30JEF10AA008	30UJA18019	H	H	SI	S C/NM	Y (4) Y (5)
PZR Spray Press Instr Vlv Loop 3	30JEF10AA309	30UJA29019	H	H	SI	S C/NM	Y (4) Y (5)
PZR Steam Level Instr Vlv #1	30JEF10AA302	30UJA29019	H	H	SI	S C/NM	Y (4) Y (5)
PZR Steam Level Instr Vlv #2	30JEF10AA301	30UJA29019	H	H	SI	S C/NM	Y (4) Y (5)
PZR Steam Level Instr Vlv #3	30JEF10AA304	30UJA29019	H	H	SI	S C/NM	Y (4) Y (5)
PZR Steam Level Instr Vlv #4	30JEF10AA303	30UJA29019	H	H	SI	S C/NM	Y (4) Y (5)
PZR Liquid Level Instr Vlv #1	30JEF10AA305	30UJA18019	H	H	SI	S C/NM	Y (4) Y (5)
PZR Liquid Level Instr Vlv #2	30JEF10AA306	30UJA18019	H	H	SI	S C/NM	Y (4) Y (5)
PZR Liquid Level Instr Vlv #3	30JEF10AA307	30UJA18019	H	H	SI	S C/NM	Y (4) Y (5)
PZR Liquid Level Instr Vlv #4	30JEF10AA308	30UJA18019	H	H	SI	S C/NM	Y (4) Y (5)
PZR On-Off Heater #1 Train 1 (PB)	30JEF10AH111A	30UJA18019	H	H	SI	S C/NM	Y (4) Y (5)
PZR On-Off Heater #2 Train 1 (PB)	30JEF10AH111B	30UJA18019	H	H	SI	S C/NM	Y (4) Y (5)
PZR On-Off Heater #3 Train 1 (PB)	30JEF10AH111C	30UJA18019	H	H	SI	S C/NM	Y (4) Y (5)
PZR On-Off Heater #4 Train 1 (PB)	30JEF10AH112A	30UJA18019	H	H	SI	S C/NM	Y (4) Y (5)
PZR On-Off Heater #5 Train 1 (PB)	30JEF10AH112B	30UJA18019	H	H	SI	S C/NM	Y (4) Y (5)
PZR On-Off Heater #6 Train 1 (PB)	30JEF10AH112C	30UJA18019	H	H	SI	S C/NM	Y (4) Y (5)
PZR On-Off Heater #7 Train 1 (PB)	30JEF10AH113A	30UJA18019	H	H	SI	S C/NM	Y (4) Y (5)
PZR On-Off Heater #8 Train 1 (PB)	30JEF10AH113B	30UJA18019	H	H	SI	S C/NM	Y (4) Y (5)
PZR On-Off Heater #9 Train 1 (PB)	30JEF10AH113C	30UJA18019	H	H	SI	S C/NM	Y (4) Y (5)
PZR On-Off Heater #10 Train 1 (PB)	30JEF10AH114A	30UJA18019	H	H	SI	S C/NM	Y (4) Y (5)
PZR On-Off Heater #11 Train 1 (PB)	30JEF10AH114B	30UJA18019	H	H	SI	S C/NM	Y (4) Y (5)
PZR On-Off Heater #12 Train 1 (PB)	30JEF10AH114C	30UJA18019	H	H	SI	S C/NM	Y (4) Y (5)
PZR Proportional Heater #1 Train 1 (PB)	30JEF10AH121A	30UJA18019	H	H	SI	S C/NM	Y (4) Y (5)
PZR Proportional Heater #2 Train 1 (PB)	30JEF10AH121B	30UJA18019	H	H	SI	S C/NM	Y (4) Y (5)
PZR Proportional Heater #3 Train 1 (PB)	30JEF10AH121C	30UJA18019	H	H	SI	S C/NM	Y (4) Y (5)
PZR Proportional Heater #4 Train 1 (PB)	30JEF10AH122A	30UJA18019	H	H	SI	S C/NM	Y (4) Y (5)
PZR Proportional Heater #5 Train 1 (PB)	30JEF10AH122B	30UJA18019	H	H	SI	S C/NM	Y (4) Y (5)
PZR Proportional Heater #6 Train 1 (PB)	30JEF10AH122C	30UJA18019	H	H	SI	S C/NM	Y (4) Y (5)

Table 3.10-1—List of Seismically and Dynamically Qualified Mechanical and Electrical Equipment (Sheet 42 of 197)

Name Tag (Equipment Description)	Tag Number	Local Area KKS ID (Room Location)	EQ Environment (Note 1)	Radiation Environment Zone (Note 2)	EQ Designated Function (Note 3)	Safety Class (Note 4)		EQ Program Designation (Note 5)	
PZR Proportional Heater #7 Train 1 (PB)	30JEF10AH123A	30UJA18019	H	H	SI	S	C/NM	Y (4)	Y (5)
PZR Proportional Heater #8 Train 1 (PB)	30JEF10AH123B	30UJA18019	H	H	SI	S	C/NM	Y (4)	Y (5)
PZR Proportional Heater #9 Train 1 (PB)	30JEF10AH123C	30UJA18019	H	H	SI	S	C/NM	Y (4)	Y (5)
PZR On-Off Heater #1 Train 1 (PB)	30JEF10AH131A	30UJA18019	H	H	SI	S	C/NM	Y (4)	Y (5)
PZR On-Off Heater #2 Train 1 (PB)	30JEF10AH131B	30UJA18019	H	H	SI	S	C/NM	Y (4)	Y (5)
PZR On-Off Heater #3 Train 1 (PB)	30JEF10AH131C	30UJA18019	H	H	SI	S	C/NM	Y (4)	Y (5)
PZR On-Off Heater #4 Train 1 (PB)	30JEF10AH132A	30UJA18019	H	H	SI	S	C/NM	Y (4)	Y (5)
PZR On-Off Heater #5 Train 1 (PB)	30JEF10AH132B	30UJA18019	H	H	SI	S	C/NM	Y (4)	Y (5)
PZR On-Off Heater #6 Train 1 (PB)	30JEF10AH132C	30UJA18019	H	H	SI	S	C/NM	Y (4)	Y (5)
PZR On-Off Heater #1 Train 2 (PB)	30JEF10AH211A	30UJA18019	H	H	SI	S	C/NM	Y (4)	Y (5)
PZR On-Off Heater #2 Train 2 (PB)	30JEF10AH211B	30UJA18019	H	H	SI	S	C/NM	Y (4)	Y (5)
PZR On-Off Heater #3 Train 2 (PB)	30JEF10AH211C	30UJA18019	H	H	SI	S	C/NM	Y (4)	Y (5)
PZR On-Off Heater #4 Train 2 (PB)	30JEF10AH212A	30UJA18019	H	H	SI	S	C/NM	Y (4)	Y (5)
PZR On-Off Heater #5 Train 2 (PB)	30JEF10AH212B	30UJA18019	H	H	SI	S	C/NM	Y (4)	Y (5)
PZR On-Off Heater #6 Train 2 (PB)	30JEF10AH212C	30UJA18019	H	H	SI	S	C/NM	Y (4)	Y (5)
PZR On-Off Heater #7 Train 2 (PB)	30JEF10AH213A	30UJA18019	H	H	SI	S	C/NM	Y (4)	Y (5)
PZR On-Off Heater #8 Train 2 (PB)	30JEF10AH213B	30UJA18019	H	H	SI	S	C/NM	Y (4)	Y (5)
PZR On-Off Heater #9 Train 2 (PB)	30JEF10AH213C	30UJA18019	H	H	SI	S	C/NM	Y (4)	Y (5)
PZR On-Off Heater #10 Train 2 (PB)	30JEF10AH214A	30UJA18019	H	H	SI	S	C/NM	Y (4)	Y (5)
PZR On-Off Heater #11 Train 2 (PB)	30JEF10AH214B	30UJA18019	H	H	SI	S	C/NM	Y (4)	Y (5)
PZR On-Off Heater #12 Train 2 (PB)	30JEF10AH214C	30UJA18019	H	H	SI	S	C/NM	Y (4)	Y (5)
PZR On-Off Heater #13 Train 2 (PB)	30JEF10AH215A	30UJA18019	H	H	SI	S	C/NM	Y (4)	Y (5)
PZR On-Off Heater #14 Train 2 (PB)	30JEF10AH215B	30UJA18019	H	H	SI	S	C/NM	Y (4)	Y (5)
PZR On-Off Heater #15 Train 2 (PB)	30JEF10AH215C	30UJA18019	H	H	SI	S	C/NM	Y (4)	Y (5)
PZR Proportional Heater #1 Train 2 (PB)	30JEF10AH221A	30UJA18019	H	H	SI	S	C/NM	Y (4)	Y (5)
PZR Proportional Heater #2 Train 2 (PB)	30JEF10AH221B	30UJA18019	H	H	SI	S	C/NM	Y (4)	Y (5)
PZR Proportional Heater #3 Train 2 (PB)	30JEF10AH221C	30UJA18019	H	H	SI	S	C/NM	Y (4)	Y (5)
PZR Proportional Heater #4 Train 2 (PB)	30JEF10AH222A	30UJA18019	H	H	SI	S	C/NM	Y (4)	Y (5)
PZR Proportional Heater #5 Train 2 (PB)	30JEF10AH222B	30UJA18019	H	H	SI	S	C/NM	Y (4)	Y (5)
PZR Proportional Heater #6 Train 2 (PB)	30JEF10AH222C	30UJA18019	H	H	SI	S	C/NM	Y (4)	Y (5)
PZR On-Off Heater #1 Train 2 (PB)	30JEF10AH233A	30UJA18019	H	H	SI	S	C/NM	Y (4)	Y (5)
PZR On-Off Heater #2 Train 2 (PB)	30JEF10AH233B	30UJA18019	H	H	SI	S	C/NM	Y (4)	Y (5)
PZR On-Off Heater #3 Train 2 (PB)	30JEF10AH233C	30UJA18019	H	H	SI	S	C/NM	Y (4)	Y (5)

Table 3.10-1—List of Seismically and Dynamically Qualified Mechanical and Electrical Equipment (Sheet 43 of 197)

Name Tag (Equipment Description)	Tag Number	Local Area KKS ID (Room Location)	EQ Environment (Note 1)	Radiation Environment Zone (Note 2)	EQ Designated Function (Note 3)	Safety Class (Note 4)		EQ Program Designation (Note 5)	
PZR On-Off Heater #4 Train 2 (PB)	30JEF10AH234A	30UJA18019	H	H	SI	S	C/NM	Y (4)	Y (5)
PZR On-Off Heater #5 Train 2 (PB)	30JEF10AH234B	30UJA18019	H	H	SI	S	C/NM	Y (4)	Y (5)
PZR On-Off Heater #6 Train 2 (PB)	30JEF10AH234C	30UJA18019	H	H	SI	S	C/NM	Y (4)	Y (5)
PZR On-Off Heater #1 Train 3 (PB)	30JEF10AH311A	30UJA18019	H	H	SI	S	C/NM	Y (4)	Y (5)
PZR On-Off Heater #2 Train 3 (PB)	30JEF10AH311B	30UJA18019	H	H	SI	S	C/NM	Y (4)	Y (5)
PZR On-Off Heater #3 Train 3 (PB)	30JEF10AH311C	30UJA18019	H	H	SI	S	C/NM	Y (4)	Y (5)
PZR On-Off Heater #4 Train 3 (PB)	30JEF10AH312A	30UJA18019	H	H	SI	S	C/NM	Y (4)	Y (5)
PZR On-Off Heater #5 Train 3 (PB)	30JEF10AH312B	30UJA18019	H	H	SI	S	C/NM	Y (4)	Y (5)
PZR On-Off Heater #6 Train 3 (PB)	30JEF10AH312C	30UJA18019	H	H	SI	S	C/NM	Y (4)	Y (5)
PZR On-Off Heater #7 Train 3 (PB)	30JEF10AH313A	30UJA18019	H	H	SI	S	C/NM	Y (4)	Y (5)
PZR On-Off Heater #8 Train 3 (PB)	30JEF10AH313B	30UJA18019	H	H	SI	S	C/NM	Y (4)	Y (5)
PZR On-Off Heater #9 Train 3 (PB)	30JEF10AH313C	30UJA18019	H	H	SI	S	C/NM	Y (4)	Y (5)
PZR On-Off Heater #10 Train 3 (PB)	30JEF10AH314A	30UJA18019	H	H	SI	S	C/NM	Y (4)	Y (5)
PZR On-Off Heater #11 Train 3 (PB)	30JEF10AH314B	30UJA18019	H	H	SI	S	C/NM	Y (4)	Y (5)
PZR On-Off Heater #12 Train 3 (PB)	30JEF10AH314C	30UJA18019	H	H	SI	S	C/NM	Y (4)	Y (5)
PZR On-Off Heater #13 Train 3 (PB)	30JEF10AH315A	30UJA18019	H	H	SI	S	C/NM	Y (4)	Y (5)
PZR On-Off Heater #14 Train 3 (PB)	30JEF10AH315B	30UJA18019	H	H	SI	S	C/NM	Y (4)	Y (5)
PZR On-Off Heater #15 Train 3 (PB)	30JEF10AH315C	30UJA18019	H	H	SI	S	C/NM	Y (4)	Y (5)
PZR Proportional Heater #1 Train 3 (PB)	30JEF10AH321A	30UJA18019	H	H	SI	S	C/NM	Y (4)	Y (5)
PZR Proportional Heater #2 Train 3 (PB)	30JEF10AH321B	30UJA18019	H	H	SI	S	C/NM	Y (4)	Y (5)
PZR Proportional Heater #3 Train 3 (PB)	30JEF10AH321C	30UJA18019	H	H	SI	S	C/NM	Y (4)	Y (5)
PZR Proportional Heater #4 Train 3 (PB)	30JEF10AH322A	30UJA18019	H	H	SI	S	C/NM	Y (4)	Y (5)
PZR Proportional Heater #5 Train 3 (PB)	30JEF10AH322B	30UJA18019	H	H	SI	S	C/NM	Y (4)	Y (5)
PZR Proportional Heater #6 Train 3 (PB)	30JEF10AH322C	30UJA18019	H	H	SI	S	C/NM	Y (4)	Y (5)
PZR On-Off Heater #1 Train 3 (PB)	30JEF10AH331A	30UJA18019	H	H	SI	S	C/NM	Y (4)	Y (5)
PZR On-Off Heater #2 Train 3 (PB)	30JEF10AH331B	30UJA18019	H	H	SI	S	C/NM	Y (4)	Y (5)
PZR On-Off Heater #3 Train 3 (PB)	30JEF10AH331C	30UJA18019	H	H	SI	S	C/NM	Y (4)	Y (5)
PZR On-Off Heater #4 Train 3 (PB)	30JEF10AH332A	30UJA18019	H	H	SI	S	C/NM	Y (4)	Y (5)
PZR On-Off Heater #5 Train 3 (PB)	30JEF10AH332B	30UJA18019	H	H	SI	S	C/NM	Y (4)	Y (5)
PZR On-Off Heater #6 Train 3 (PB)	30JEF10AH332C	30UJA18019	H	H	SI	S	C/NM	Y (4)	Y (5)
PZR On-Off Heater #1 Train 4 (PB)	30JEF10AH411A	30UJA18019	H	H	SI	S	C/NM	Y (4)	Y (5)
PZR On-Off Heater #2 Train 4 (PB)	30JEF10AH411B	30UJA18019	H	H	SI	S	C/NM	Y (4)	Y (5)
PZR On-Off Heater #3 Train 4 (PB)	30JEF10AH411C	30UJA18019	H	H	SI	S	C/NM	Y (4)	Y (5)

Table 3.10-1—List of Seismically and Dynamically Qualified Mechanical and Electrical Equipment (Sheet 44 of 197)

Name Tag (Equipment Description)	Tag Number	Local Area KKS ID (Room Location)	EQ Environment (Note 1)	Radiation Environment Zone (Note 2)	EQ Designated Function (Note 3)	Safety Class (Note 4)	EQ Program Designation (Note 5)
PZR On-Off Heater #4 Train 4 (PB)	30JEF10AH412A	30UJA18019	H	H	SI	S C/NM	Y (4) Y (5)
PZR On-Off Heater #5 Train 4 (PB)	30JEF10AH412B	30UJA18019	H	H	SI	S C/NM	Y (4) Y (5)
PZR On-Off Heater #6 Train 4 (PB)	30JEF10AH412C	30UJA18019	H	H	SI	S C/NM	Y (4) Y (5)
PZR On-Off Heater #7 Train 4 (PB)	30JEF10AH413A	30UJA18019	H	H	SI	S C/NM	Y (4) Y (5)
PZR On-Off Heater #8 Train 4 (PB)	30JEF10AH413B	30UJA18019	H	H	SI	S C/NM	Y (4) Y (5)
PZR On-Off Heater #9 Train 4 (PB)	30JEF10AH413C	30UJA18019	H	H	SI	S C/NM	Y (4) Y (5)
PZR On-Off Heater #10 Train 4 (PB)	30JEF10AH414A	30UJA18019	H	H	SI	S C/NM	Y (4) Y (5)
PZR On-Off Heater #11 Train 4 (PB)	30JEF10AH414B	30UJA18019	H	H	SI	S C/NM	Y (4) Y (5)
PZR On-Off Heater #12 Train 4 (PB)	30JEF10AH414C	30UJA18019	H	H	SI	S C/NM	Y (4) Y (5)
PZR Proportional Heater #1 Train 4 (PB)	30JEF10AH421A	30UJA18019	H	H	SI	S C/NM	Y (4) Y (5)
PZR Proportional Heater #2 Train 4 (PB)	30JEF10AH421B	30UJA18019	H	H	SI	S C/NM	Y (4) Y (5)
PZR Proportional Heater #3 Train 4 (PB)	30JEF10AH421C	30UJA18019	H	H	SI	S C/NM	Y (4) Y (5)
PZR Proportional Heater #4 Train 4 (PB)	30JEF10AH422A	30UJA18019	H	H	SI	S C/NM	Y (4) Y (5)
PZR Proportional Heater #5 Train 4 (PB)	30JEF10AH422B	30UJA18019	H	H	SI	S C/NM	Y (4) Y (5)
PZR Proportional Heater #6 Train 4 (PB)	30JEF10AH422C	30UJA18019	H	H	SI	S C/NM	Y (4) Y (5)
PZR Proportional Heater #7 Train 4 (PB)	30JEF10AH423A	30UJA18019	H	H	SI	S C/NM	Y (4) Y (5)
PZR Proportional Heater #8 Train 4 (PB)	30JEF10AH423B	30UJA18019	H	H	SI	S C/NM	Y (4) Y (5)
PZR Proportional Heater #9 Train 4 (PB)	30JEF10AH423C	30UJA18019	H	H	SI	S C/NM	Y (4) Y (5)
PZR On-Off Heater #1 Train 4 (PB)	30JEF10AH433A	30UJA18019	H	H	SI	S C/NM	Y (4) Y (5)
PZR On-Off Heater #2 Train 4 (PB)	30JEF10AH433B	30UJA18019	H	H	SI	S C/NM	Y (4) Y (5)
PZR On-Off Heater #3 Train 4 (PB)	30JEF10AH433C	30UJA18019	H	H	SI	S C/NM	Y (4) Y (5)
PZR On-Off Heater #4 Train 4 (PB)	30JEF10AH434A	30UJA18019	H	H	SI	S C/NM	Y (4) Y (5)
PZR On-Off Heater #5 Train 4 (PB)	30JEF10AH434B	30UJA18019	H	H	SI	S C/NM	Y (4) Y (5)
PZR On-Off Heater #6 Train 4 (PB)	30JEF10AH434C	30UJA18019	H	H	SI	S C/NM	Y (4) Y (5)
PSRV #1 Position Sensor (M)	30JEF10CG191B	30UJA34019	H	H	PAM SI	NS-AQ	Y (5)
PSRV #1 Temp Sensor #1 (PB)	30JEG10CT013	30UJA34019	H	H	SII	NS-AQ	Y (5)
PSRV #1 Temp Sensor #2 (PB)	30JEG10CT016	30UJA34019	H	H	SII	NS-AQ	Y (5)
PSRV #1 Temp Sensor #3 (PB)	30JEG10CT017	30UJA34019	H	H	SII	NS-AQ	Y (5)
PSRV #1 Relief Line Temp Sensor (PB)	30JEF10CT061	30UJA34019	H	H	SI	S	Y (5)
PSRV #2 Position Sensor (M)	30JEF10CG192B	30UJA34019	H	H	PAM SI	NS-AQ	Y (5)
PSRV #2 Temp Sensor #1 (PB)	30JEG10CT023	30UJA34019	H	H	SII	NS-AQ	Y (5)
PSRV #2 Temp Sensor #2 (PB)	30JEG10CT026	30UJA34019	H	H	SII	NS-AQ	Y (5)
PSRV #2 Temp Sensor #3 (PB)	30JEG10CT027	30UJA34019	H	H	SII	NS-AQ	Y (5)

Table 3.10-1—List of Seismically and Dynamically Qualified Mechanical and Electrical Equipment (Sheet 45 of 197)

Name Tag (Equipment Description)	Tag Number	Local Area KKS ID (Room Location)	EQ Environment (Note 1)	Radiation Environment Zone (Note 2)	EQ Designated Function (Note 3)	Safety Class (Note 4)	EQ Program Designation (Note 5)
PSRV #2 Relief Line Temp Sensor (PB)	30JEF10CT062	30UJA34019	H	H	SI	S	Y (5)
PSRV #3 Position Sensor (M)	30JEF10CG193B	30UJA34019	H	H	PAM SI	NS-AQ	Y (5)
PSRV #3 Temp Sensor #1 (PB)	30JEG10CT033	30UJA34019	H	H	SII	NS-AQ	Y (5)
PSRV #3 Temp Sensor #2 (PB)	30JEG10CT036	30UJA34019	H	H	SII	NS-AQ	Y (5)
PSRV #3 Temp Sensor #3 (PB)	30JEG10CT037	30UJA34019	H	H	SII	NS-AQ	Y (5)
PSRV #3 Relief Line Temp Sensor (PB)	30JEF10CT063	30UJA34019	H	H	SI	S	Y (5)
PDS Vlv Temp Sensor (PB)	30JEF10CT064	30UJA34019	H	H	SI	S	Y (5)
PZR Spray Temp Sensor #1 (PB)	30JEF10CT054	30UJA29019	H	H	SI	S	Y (5)
PZR Spray Temp Sensor #2 (PB)	30JEF10CT055	30UJA29019	H	H	SI	S	Y (5)
PZR/RCS Level Sensor #1 (PB)	30JEF10CL081	30UJA15008	H	H	SI	S	Y (5)
PZR/RCS Level Sensor #2 (PB)	30JEF10CL782	30UJA15008	H	H	SI	S	Y (5)
PZR Level Sensor #1 (PB)	30JEF10CL802	30UJA15009	H	H	PAM SI	S	Y (5)
PZR Level Sensor #2 (PB)	30JEF10CL804	30UJA15009	H	H	PAM SI	S	Y (5)
PZR Level Sensor #3 (PB)	30JEF10CL806	30UJA15009	H	H	PAM SI	S	Y (5)
PZR Level Sensor #4 (PB)	30JEF10CL808	30UJA15009	H	H	PAM SI	S	Y (5)
PZR NR Press Sensor #1 (PB)	30JEF10CP801	30UJA18019	H	H	SI	S	Y (5)
PZR NR Press Sensor #2 (PB)	30JEF10CP803	30UJA18019	H	H	SI	S	Y (5)
PZR NR Press Sensor #3 (PB)	30JEF10CP805	30UJA18019	H	H	SI	S	Y (5)
PZR NR Press Sensor #4 (PB)	30JEF10CP807	30UJA18019	H	H	SI	S	Y (5)
PZR Steam Temp Sensor (PB)	30JEF10CT050	30UJA29019	H	H	SI	S	Y (5)
PZR Water Temp Sensor (PB)	30JEF10CT057	30UJA29019	H	H	SI	S	Y (5)
Pressurizer Relief System							
PRT	30JEG10BB001	30UJA11019	H	H	SII	NS-AQ	Y (5)
PRT Instr Lower Vlv	30JEG10AA310	30UJA11019	H	H	SII		
PRT Instr Upper Vlv	30JEG10AA309	30UJA11019	H	H	SII		
PRT Vacuum Breaker	30JEG10AA015	30UJA11019	H	H	SII		
PRT Rupture Disk #1	30JEG10AA195	30UJA11019	H	H	SII	NS-AQ C/NM	Y (4) Y (5)
PRT Rupture Disk #2	30JEG10AA196	30UJA11019	H	H	SII	NS-AQ C/NM	Y (4) Y (5)
PRT Disch Line #1 Thermal Exp Bellow	30JEG10BZ195	30UJA11019	H	H	SII	NS-AQ	Y (5)
PRT Disch Line #2 Thermal Exp Bellow	30JEG10BZ196	30UJA11019	H	H	SII	NS-AQ	Y (5)
PRT Disch Line C-C Thermal Exp Bellow	30JEG10BZ197	30UJA11019	H	H	SII	NS-AQ	Y (5)
PRT Disch Line #1 Penetration	30JEG10BQ195	30UJA11019	H	H	SII	NS-AQ	Y (5)
PRT Disch Line #2 Penetration	30JEG10BQ196	30UJA11019	H	H	SII	NS-AQ	Y (5)

Table 3.10-1—List of Seismically and Dynamically Qualified Mechanical and Electrical Equipment (Sheet 46 of 197)

Name Tag (Equipment Description)	Tag Number	Local Area KKS ID (Room Location)	EQ Environment (Note 1)	Radiation Environment Zone (Note 2)	EQ Designated Function (Note 3)	Safety Class (Note 4)	EQ Program Designation (Note 5)
PRT Tank Filling Line Iso Vlv	30JEG10AA013	30UJA15018	H	H	SII	NS-AQ C/NM	Y (4) Y (5)
PRT Cooling Line Iso Vlv	30JEG10AA012	30UJA15018	H	H	SII	NS-AQ C/NM	Y (4) Y (5)
PRT Vent Line Iso Vlv	30JEG10AA014	30UJA11019	H	H	SII	NS-AQ C/NM	Y (4) Y (5)
PRT Drain Vlv	30JEG10AA401	30UJA11019	H	H	SII	NS-AQ C/NM	Y (4) Y (5)
PZR Degassing Vlv #1	30JEF10AA503	30UJA34019	H	H	SI	S C/NM	Y (4) Y (5)
PZR Degassing Vlv #2	30JEF10AA504	30UJA34019	H	H	SI	S C/NM	Y (4) Y (5)
PZR Degassing Vlv #3	30JEG10AA504	30UJA34015	H	H	SII	NS-AQ C/NM	Y (4) Y (5)
PZR Degassing Vlv #4	30JEG10AA505	30UJA34015	H	H	SII	NS-AQ C/NM	Y (4) Y (5)
PZR Degassing Vlv #5	30JEG10AA506	30UJA34015	H	H	SII	NS-AQ C/NM	Y (4) Y (5)
PZR High Flow Degas Limiter	30JEG10BP504	30UJA34015	H	H	SII	NS-AQ	Y (5)
PZR Low Flow Degas Limiter	30JEG10BP505	30UJA34015	H	H	SII	NS-AQ	Y (5)
PZR Degassing Vent Iso Vlv	30JEG10AA025	30UJA11019	H	H	SII	NS-AQ C/NM	Y (4) Y (5)
PZR Degassing Drain Vlv #1	30JEF10AA402	30UJA34019	H	H	SI	S C/NM	Y (4) Y (5)
PZR Degassing Drain Vlv #2	30JEF10AA403	30UJA34019	H	H	SI	S C/NM	Y (4) Y (5)
PZR Vacuum Pump/N2 Vlv #1	30JEF10AA501	30UJA34019	H	H	SI	S C/NM	Y (4) Y (5)
PZR Vacuum Pump/N2 Vlv #2	30JEF10AA502	30UJA34019	H	H	SI	S C/NM	Y (4) Y (5)
PZR Nitrogen Supply Iso Vlv	30JEG10AA019	30UJA34015	H	H	SII	NS-AQ C/NM	Y (4) Y (5)
PZR Nitrogen Supply Check Vlv	30JEG10AA021	30UJA34015	H	H	SII	NS-AQ C/NM	Y (4) Y (5)
PZR Vacuum Pump Iso Vlv	30JEG10AA503	30UJA34015	H	H	SII	NS-AQ C/NM	Y (4) Y (5)
PRT Level Sensor #1 (PB)	30JEG10CL051	30UJA11019	H	H	SII	NS-AQ	Y (5)
PRT Level Sensor #2 (PB)	30JEG10CL151	30UJA11019	H	H	SII	NS-AQ	Y (5)
PRT Press Sensor #1 (PB)	30JEG10CP061	30UJA11019	H	H	SII	NS-AQ	Y (5)
PRT Press Sensor #2 (PB)	30JEG10CP161	30UJA11019	H	H	SII	NS-AQ	Y (5)
PRT Temp Sensor #1 (PB)	30JEG10CT021	30UJA11019	H	H	SII	NS-AQ	Y (5)
PRT Temp Sensor #2 (PB)	30JEG10CT121	30UJA11019	H	H	SII	NS-AQ	Y (5)
PZR Vacuum Press Sensor (PB)	30JEF10CP007	30UJA29019	H	H	SI	S	Y (5)
Safety Injection & Residual Heat Removal System (SIS & RHRS)							
RHR 1st RCPB Isolation Valve	30JNA10AA001	30UJA11003	H	H	ES SI	S C/NM	Y (4) Y (5)
RHR 2nd RCPB Isolation Valve	30JNA10AA002	30UJA11025	H	H	ES PAM SI	S C/NM	Y (4) Y (5)
RHR Outside Containment Isolation Valve	30JNA10AA003	31UJH05004	M	H	ES PAM SI	S C/NM	Y (3) Y (5)
RHR 1st RCPB Bypass Check Valve	30JNA10AA009	30UJA11003	H	H	ES SI	S C/NM	Y (4) Y (5)
LHSI HX Bypass Control Valve	30JNA10AA101	31UJH05004	M	H	ES SI	S C/NM	Y (3) Y (5)
RHR Suction Line Safety Valve	30JNA10AA191	30UJA11025	H	H	ES SI	S C/NM	Y (4) Y (5)

Table 3.10-1—List of Seismically and Dynamically Qualified Mechanical and Electrical Equipment (Sheet 47 of 197)

Name Tag (Equipment Description)	Tag Number	Local Area KKS ID (Room Location)	EQ Environment (Note 1)	Radiation Environment Zone (Note 2)	EQ Designated Function (Note 3)			Safety Class (Note 4)		EQ Program Designation (Note 5)		
LHSI HX Byp. Control Valve Pos. Sensor	30JNA10CG101	31UJH05004	M	H	ES		SI	S	C/NM	Y (3)		Y (5)
RHR Suct. Line Safety Valve Pos. Sensor	30JNA10CG191B	30UJA11025	H	H	ES		SI	S	C/NM		Y (4)	Y (5)
SAB Sump Level Sensor 1	30JNA10CL801	31UJH10004	M	H			SII	NS-AQ	C/NM	Y (3)		Y (5)
SAB Sump Level Sensor 2	30JNA10CL802	31UJH10004	M	H			SII	NS-AQ	C/NM	Y (3)		Y (5)
SAB Sump Level Sensor 3	30JNA10CL803	31UJH10004	M	H			SII	NS-AQ	C/NM	Y (3)		Y (5)
SAB Sump Level Sensor 4	30JNA10CL804	31UJH10004	M	H			SII	NS-AQ	C/NM	Y (3)		Y (5)
Hot Leg RHR Suction Pressure Sensor	30JNA10CP001	30UJA07014	H	H			SI	S	C/NM		Y (4)	Y (5)
SAB Pressure Sensor 1	30JNA10CP801	31UJH10004	M	H			SII	NS-AQ	C/NM	Y (3)		Y (5)
SAB Pressure Sensor 2	30JNA10CP802	31UJH10004	M	H			SII	NS-AQ	C/NM	Y (3)		Y (5)
SAB Pressure Sensor 3	30JNA10CP803	31UJH10004	M	H			SII	NS-AQ	C/NM	Y (3)		Y (5)
SAB Pressure Sensor 4	30JNA10CP804	31UJH10004	M	H			SII	NS-AQ	C/NM	Y (3)		Y (5)
Hot Leg Pressure Sensor (WR)	30JNA10CP826	30UJA07014	H	H	ES	PAM	SI	S	C/NM		Y (4)	Y (5)
Hot Leg Pressure Sensor (NR)	30JNA10CP827	30UJA07014	H	H	ES	PAM	SI	S	C/NM		Y (4)	Y (5)
HL RHR Suction Temperature Sensor	30JNA10CT001	30UJA11003	H	H			SI	S	C/NM		Y (4)	Y (5)
RHR 1st RCPB Isolation Valve	30JNA20AA001	30UJA11004	H	H	ES		SI	S	C/NM		Y (4)	Y (5)
RHR 2nd RCPB Isolation Valve	30JNA20AA002	30UJA11026	H	H	ES	PAM	SI	S	C/NM		Y (4)	Y (5)
RHR Outside Containment Isolation Valve	30JNA20AA003	32UJH05002	M	H	ES	PAM	SI	S	C/NM	Y (3)		Y (5)
RHR 1st RCPB Bypass Check Valve	30JNA20AA009	30UJA11004	H	H	ES		SI	S	C/NM		Y (4)	Y (5)
LHSI HX Bypass Control Valve	30JNA20AA101	32UJH05002	M	H	ES		SI	S	C/NM	Y (3)		Y (5)
RHR Suction Line Safety Valve	30JNA20AA191	30UJA11026	H	H	ES		SI	S	C/NM		Y (4)	Y (5)
LHSI HX Byp. Control Valve Pos. Sensor	30JNA20CG101	32UJH05002	M	H	ES		SI	S	C/NM	Y (3)		Y (5)
RHR Suct. Line Safety Valve Pos. Sensor	30JNA20CG191B	30UJA11026	H	H	ES		SI	S	C/NM		Y (4)	Y (5)
SAB Sump Level Sensor 1	30JNA20CL801	32UJH10002	M	H			SII	NS-AQ	C/NM	Y (3)		Y (5)
SAB Sump Level Sensor 2	30JNA20CL802	32UJH10002	M	H			SII	NS-AQ	C/NM	Y (3)		Y (5)
SAB Sump Level Sensor 3	30JNA20CL803	32UJH10002	M	H			SII	NS-AQ	C/NM	Y (3)		Y (5)
SAB Sump Level Sensor 4	30JNA20CL804	32UJH10002	M	H			SII	NS-AQ	C/NM	Y (3)		Y (5)
Hot Leg RHR Suction Pressure Sensor	30JNA20CP001	30UJA07014	H	H			SI	S	C/NM		Y (4)	Y (5)
SAB Pressure Sensor 1	30JNA20CP801	32UJH10002	M	H			SII	NS-AQ	C/NM	Y (3)		Y (5)
SAB Pressure Sensor 2	30JNA20CP802	32UJH10002	M	H			SII	NS-AQ	C/NM	Y (3)		Y (5)
SAB Pressure Sensor 3	30JNA20CP803	32UJH10002	M	H			SII	NS-AQ	C/NM	Y (3)		Y (5)
SAB Pressure Sensor 4	30JNA20CP804	32UJH10002	M	H			SII	NS-AQ	C/NM	Y (3)		Y (5)
Hot Leg Pressure Sensor (WR)	30JNA20CP826	30UJA07014	H	H	ES	PAM	SI	S	C/NM		Y (4)	Y (5)
Hot Leg Pressure Sensor (NR)	30JNA20CP827	30UJA07014	H	H	ES	PAM	SI	S	C/NM		Y (4)	Y (5)

Table 3.10-1—List of Seismically and Dynamically Qualified Mechanical and Electrical Equipment (Sheet 48 of 197)

Name Tag (Equipment Description)	Tag Number	Local Area KKS ID (Room Location)	EQ Environment (Note 1)	Radiation Environment Zone (Note 2)	EQ Designated Function (Note 3)			Safety Class (Note 4)		EQ Program Designation (Note 5)	
HL RHR Suction Temperature Sensor	30JNA20CT001	30UJA11004	H	H			SI	S	C/NM	Y (4)	Y (5)
RHR 1st RCPB Isolation Valve	30JNA30AA001	30UJA11007	H	H	ES		SI	S	C/NM	Y (4)	Y (5)
RHR 2nd RCPB Isolation Valve	30JNA30AA002	30UJA11027	H	H	ES	PAM	SI	S	C/NM	Y (4)	Y (5)
RHR Outside Containment Isolation Valve	30JNA30AA003	33UJH05002	M	H	ES	PAM	SI	S	C/NM	Y (3)	Y (5)
HX Byp. Iso. Valve on Puri. Line to CVCS	30JNA30AA004	33UJH05002	M	H	ES		SI	S	C/NM	Y (3)	Y (5)
HX Byp. Check Valve on Puri. Ln. to CVCS	30JNA30AA006	33UJH05002	M	H	ES		SI	S	C/NM	Y (3)	Y (5)
RHR 1st RCPB Bypass Check Valve	30JNA30AA009	30UJA11007	H	H	ES		SI	S	C/NM	Y (4)	Y (5)
LHSI HX Bypass Control Valve	30JNA30AA101	33UJH05002	M	H	ES		SI	S	C/NM	Y (3)	Y (5)
HX Byp. Thr. Valve on Puri. Line to CVCS	30JNA30AA103	33UJH05002	M	H	ES		SI	S	C/NM	Y (3)	Y (5)
RHR Suction Line Safety Valve	30JNA30AA191	30UJA11027	H	H	ES		SI	S	C/NM	Y (4)	Y (5)
LHSI HX Byp. Control Valve Pos. Sensor	30JNA30CG101	33UJH05002	M	H	ES		SI	S	C/NM	Y (3)	Y (5)
HX Thr. Val. on Puri. to CVCS Pos. Ssr.	30JNA30CG103	33UJH05002	M	H	ES		SI	S	C/NM	Y (3)	Y (5)
RHR Suct. Line Safety Valve Pos. Sensor	30JNA30CG191B	30UJA11027	H	H	ES		SI	S	C/NM	Y (4)	Y (5)
SAB Sump Level Sensor 1	30JNA30CL801	33UJH10002	M	H			SII	NS-AQ	C/NM	Y (3)	Y (5)
SAB Sump Level Sensor 2	30JNA30CL802	33UJH10002	M	H			SII	NS-AQ	C/NM	Y (3)	Y (5)
SAB Sump Level Sensor 3	30JNA30CL803	33UJH10002	M	H			SII	NS-AQ	C/NM	Y (3)	Y (5)
SAB Sump Level Sensor 4	30JNA30CL804	33UJH10002	M	H			SII	NS-AQ	C/NM	Y (3)	Y (5)
Hot Leg RHR Suction Pressure Sensor	30JNA30CP001	30UJA07015	H	H			SI	S	C/NM	Y (4)	Y (5)
SAB Pressure Sensor 1	30JNA30CP801	33UJH10002	M	H			SII	NS-AQ	C/NM	Y (3)	Y (5)
SAB Pressure Sensor 2	30JNA30CP802	33UJH10002	M	H			SII	NS-AQ	C/NM	Y (3)	Y (5)
SAB Pressure Sensor 3	30JNA30CP803	33UJH10002	M	H			SII	NS-AQ	C/NM	Y (3)	Y (5)
SAB Pressure Sensor 4	30JNA30CP804	33UJH10002	M	H			SII	NS-AQ	C/NM	Y (3)	Y (5)
Hot Leg Pressure Sensor (WR)	30JNA30CP826	30UJA07015	H	H	ES	PAM	SI	S	C/NM	Y (4)	Y (5)
Hot Leg Pressure Sensor (NR)	30JNA30CP827	30UJA07015	H	H	ES	PAM	SI	S	C/NM	Y (4)	Y (5)
HL RHR Suction Temperature Sensor	30JNA30CT001	30UJA11007	H	H			SI	S	C/NM	Y (4)	Y (5)
Low-Pressure Puri. Line Temp. Sensor	30JNA30CT002	33UJH05002	M	H			SI	S	C/NM	Y (3)	Y (5)
RHR 1st RCPB Isolation Valve	30JNA40AA001	30UJA11008	H	H	ES		SI	S	C/NM	Y (4)	Y (5)
RHR 2nd RCPB Isolation Valve	30JNA40AA002	30UJA11028	H	H	ES	PAM	SI	S	C/NM	Y (4)	Y (5)
RHR Outside Containment Isolation Valve	30JNA40AA003	34UJH05004	M	H	ES	PAM	SI	S	C/NM	Y (3)	Y (5)
HX Byp. Iso. Valve on Puri. Line to CVCS	30JNA40AA004	34UJH05004	M	H	ES		SI	S	C/NM	Y (3)	Y (5)
HX Byp. Check Valve on Puri. Ln. to CVCS	30JNA40AA006	34UJH05004	M	H	ES		SI	S	C/NM	Y (3)	Y (5)
RHR 1st RCPB Bypass Check Valve	30JNA40AA009	30UJA11008	H	H	ES		SI	S	C/NM	Y (4)	Y (5)
LHSI HX Bypass Control Valve	30JNA40AA101	34UJH05004	M	H	ES		SI	S	C/NM	Y (3)	Y (5)

Table 3.10-1—List of Seismically and Dynamically Qualified Mechanical and Electrical Equipment (Sheet 49 of 197)

Name Tag (Equipment Description)	Tag Number	Local Area KKS ID (Room Location)	EQ Environment (Note 1)	Radiation Environment Zone (Note 2)	EQ Designated Function (Note 3)			Safety Class (Note 4)		EQ Program Designation (Note 5)		
HX Byp. Thr. Valve on Puri. Line to CVCS	30JNA40AA103	34UJH05004	M	H	ES		SI	S	C/NM	Y (3)		Y (5)
RHR Suction Line Safety Valve	30JNA40AA191	30UJA11028	H	H	ES		SI	S	C/NM		Y (4)	Y (5)
LHSI HX Byp. Control Valve Pos. Sensor	30JNA40CG101	34UJH05004	M	H	ES		SI	S	C/NM	Y (3)		Y (5)
HX Thr. Val. on Puri. to CVCS Pos. Ssr.	30JNA40CG103	34UJH05004	M	H	ES		SI	S	C/NM	Y (3)		Y (5)
RHR Suct. Line Safety Valve Pos. Sensor	30JNA40CG191B	30UJA11028	H	H	ES		SI	S	C/NM		Y (4)	Y (5)
SAB Sump Level Sensor 1	30JNA40CL801	34UJH10004	M	H			SII	NS-AQ	C/NM	Y (3)		Y (5)
SAB Sump Level Sensor 2	30JNA40CL802	34UJH10004	M	H			SII	NS-AQ	C/NM	Y (3)		Y (5)
SAB Sump Level Sensor 3	30JNA40CL803	34UJH10004	M	H			SII	NS-AQ	C/NM	Y (3)		Y (5)
SAB Sump Level Sensor 4	30JNA40CL804	34UJH10004	M	H			SII	NS-AQ	C/NM	Y (3)		Y (5)
Hot Leg RHR Suction Pressure Sensor	30JNA40CP001	30UJA07015	H	H			SI	S	C/NM		Y (4)	Y (5)
SAB Pressure Sensor 1	30JNA40CP801	34UJH10004	M	H			SII	NS-AQ	C/NM	Y (3)		Y (5)
SAB Pressure Sensor 2	30JNA40CP802	34UJH10004	M	H			SII	NS-AQ	C/NM	Y (3)		Y (5)
SAB Pressure Sensor 3	30JNA40CP803	34UJH10004	M	H			SII	NS-AQ	C/NM	Y (3)		Y (5)
SAB Pressure Sensor 4	30JNA40CP804	34UJH10004	M	H			SII	NS-AQ	C/NM	Y (3)		Y (5)
Hot Leg Pressure Sensor (WR)	30JNA40CP826	30UJA07016	H	H	ES	PAM	SI	S	C/NM		Y (4)	Y (5)
Hot Leg Pressure Sensor (NR)	30JNA40CP827	30UJA07016	H	H	ES	PAM	SI	S	C/NM		Y (4)	Y (5)
HL RHR Suction Temperature Sensor	30JNA40CT001	30UJA11008	H	H			SI	S	C/NM		Y (4)	Y (5)
Low-Pressure Puri. Line Temp. Sensor	30JNA40CT002	34UJH05004	M	H			SI	S	C/NM	Y (3)		Y (5)
MHSI Suction Isolation Valve	30JND10AA001	31UJH01002	M	H	ES		SI	S	C/NM	Y (3)		Y (5)
MHSI Outside Containment Isolation Valve	30JND10AA002	31UJH05004	M	H	ES	PAM	SI	S	C/NM	Y (3)		Y (5)
MHSI 2nd RCPB Isolation Valve	30JND10AA003	30UJA11025	H	H	ES		SI	S	C/NM		Y (4)	Y (5)
MHSI Small Miniflow Line Isolation Valve	30JND10AA004	30UJA07014	H	H	ES		SI	S	C/NM		Y (4)	Y (5)
MHSI Large Miniflow Line Isolation Valve	30JND10AA005	30UJA07014	H	H	ES		SI	S	C/NM		Y (4)	Y (5)
MHSI Inside Containment Isolation Valve	30JND10AA007	30UJA07014	H	H	ES		SI	S	C/NM		Y (4)	Y (5)
MHSI Control Valve	30JND10AA103	30UJA11013	H	H	ES		SI	S	C/NM		Y (4)	Y (5)
MHSI Pump	30JND10AP001	31UJH01002	M	H	ES		SI	S	C/NM	Y (3)		Y (5)
MHSI Flowrate Sensor (WR)	30JND10CF001A	31UJH01001	M	H	ES	PAM	SI	S	C/NM	Y (3)		Y (5)
MHSI Flowrate Sensor (NR)	30JND10CF001B	31UJH01001	M	H	ES		SI	S	C/NM	Y (3)		Y (5)
MHSI Control Flowrate Sensor (WR)	30JND10CF002A	30UJA11013	H	H	ES	PAM	SI	S	C/NM		Y (4)	Y (5)
MHSI Control Flowrate Sensor (NR)	30JND10CF002B	30UJA11013	H	H	ES		SI	S	C/NM		Y (4)	Y (5)
MHSI Control Valve Position Sensor	30JND10CG803	30UJA11013	H	H	ES		SI	S	C/NM		Y (4)	Y (5)
MHSI Pump Downstream Press. Sensor	30JND10CP003	31UJH01001	M	H	ES		SI	S	C/NM	Y (3)		Y (5)
MHSI Pump Upstream Press. Ind. (Local)	30JND10CP501	31UJH01002	M	H			SI	S	C/NM	Y (3)		Y (5)

Table 3.10-1—List of Seismically and Dynamically Qualified Mechanical and Electrical Equipment (Sheet 50 of 197)

Name Tag (Equipment Description)	Tag Number	Local Area KKS ID (Room Location)	EQ Environment (Note 1)	Radiation Environment Zone (Note 2)	EQ Designated Function (Note 3)			Safety Class (Note 4)		EQ Program Designation (Note 5)		
MHSI Pump Downstream Press. Ind. (Local)	30JND10CP502	31UJH01002	M	H			SI	S	C/NM	Y (3)		Y (5)
MHSI Suction Isolation Valve	30JND20AA001	32UJH01007	M	H	ES		SI	S	C/NM	Y (3)		Y (5)
MHSI Outside Containment Isolation Valve	30JND20AA002	32UJH05002	M	H	ES	PAM	SI	S	C/NM	Y (3)		Y (5)
MHSI 2nd RCPB Isolation Valve	30JND20AA003	30UJA11026	H	H	ES		SI	S	C/NM		Y (4)	Y (5)
MHSI Small Miniflow Line Isolation Valve	30JND20AA004	30UJA07014	H	H	ES		SI	S	C/NM		Y (4)	Y (5)
MHSI Large Miniflow Line Isolation Valve	30JND20AA005	30UJA07014	H	H	ES		SI	S	C/NM		Y (4)	Y (5)
MHSI Inside Containment Isolation Valve	30JND20AA007	30UJA07014	H	H	ES		SI	S	C/NM		Y (4)	Y (5)
MHSI Control Valve	30JND20AA103	30UJA11014	H	H	ES		SI	S	C/NM		Y (4)	Y (5)
MHSI Pump	30JND20AP001	32UJH01007	M	H	ES		SI	S	C/NM	Y (3)		Y (5)
MHSI Flowrate Sensor (WR)	30JND20CF001A	32UJH01003	M	H	ES	PAM	SI	S	C/NM	Y (3)		Y (5)
MHSI Flowrate Sensor (NR)	30JND20CF001B	32UJH01003	M	H	ES		SI	S	C/NM	Y (3)		Y (5)
MHSI Control Flowrate Sensor (WR)	30JND20CF002A	32UJA11014	H	H	ES	PAM	SI	S	C/NM		Y (4)	Y (5)
MHSI Control Flowrate Sensor (NR)	30JND20CF002B	30UJA11014	H	H	ES		SI	S	C/NM		Y (4)	Y (5)
MHSI Control Valve Position Sensor	30JND20CG803	30UJA11014	H	H	ES		SI	S	C/NM		Y (4)	Y (5)
MHSI Pump Downstream Press. Sensor	30JND20CP003	32UJH01003	M	H	ES		SI	S	C/NM	Y (3)		Y (5)
MHSI Pump Upstream Press. Ind. (Local)	30JND20CP501	32UJH01007	M	H			SI	S	C/NM	Y (3)		Y (5)
MHSI Pump Downstream Press. Ind. (Local)	30JND20CP502	32UJH01007	M	H			SI	S	C/NM	Y (3)		Y (5)
MHSI Suction Isolation Valve	30JND30AA001	33UJH01007	M	H	ES		SI	S	C/NM	Y (3)		Y (5)
MHSI Outside Containment Isolation Valve	30JND30AA002	33UJH05002	M	H	ES	PAM	SI	S	C/NM	Y (3)		Y (5)
MHSI 2nd RCPB Isolation Valve	30JND30AA003	30UJA11027	H	H	ES		SI	S	C/NM		Y (4)	Y (5)
MHSI Small Miniflow Line Isolation Valve	30JND30AA004	30UJA07015	H	H	ES		SI	S	C/NM		Y (4)	Y (5)
MHSI Large Miniflow Line Isolation Valve	30JND30AA005	30UJA07015	H	H	ES		SI	S	C/NM		Y (4)	Y (5)
MHSI Inside Containment Isolation Valve	30JND30AA007	30UJA07015	H	H	ES		SI	S	C/NM		Y (4)	Y (5)
MHSI Control Valve	30JND30AA103	30UJA11015	H	H	ES		SI	S	C/NM		Y (4)	Y (5)
MHSI Pump	30JND30AP001	33UJH01007	M	H	ES		SI	S	C/NM	Y (3)		Y (5)
MHSI Flowrate Sensor (WR)	30JND30CF001A	33UJH01003	M	H	ES	PAM	SI	S	C/NM	Y (3)		Y (5)
MHSI Flowrate Sensor (NR)	30JND30CF001B	33UJH01003	M	H	ES		SI	S	C/NM	Y (3)		Y (5)
MHSI Control Flowrate Sensor (WR)	30JND30CF002A	30UJA11015	H	H	ES	PAM	SI	S	C/NM		Y (4)	Y (5)
MHSI Control Flowrate Sensor (NR)	30JND30CF002B	30UJA11015	H	H	ES		SI	S	C/NM		Y (4)	Y (5)
MHSI Control Valve Position Sensor	30JND30CG803	30UJA11015	H	H	ES		SI	S	C/NM		Y (4)	Y (5)
MHSI Pump Downstream Press. Sensor	30JND30CP003	33UJH01003	M	H	ES		SI	S	C/NM	Y (3)		Y (5)
MHSI Pump Upstream Press. Ind. (Local)	30JND30CP501	33UJH01007	M	H			SI	S	C/NM	Y (3)		Y (5)
MHSI Pump Downstream Press. Ind. (Local)	30JND30CP502	33UJH01007	M	H			SI	S	C/NM	Y (3)		Y (5)

Table 3.10-1—List of Seismically and Dynamically Qualified Mechanical and Electrical Equipment (Sheet 51 of 197)

Name Tag (Equipment Description)	Tag Number	Local Area KKS ID (Room Location)	EQ Environment (Note 1)	Radiation Environment Zone (Note 2)	EQ Designated Function (Note 3)			Safety Class (Note 4)		EQ Program Designation (Note 5)		
MHSI Suction Isolation Valve	30JND40AA001	34UJH01002	M	H	ES		SI	S	C/NM	Y (3)		Y (5)
MHSI Outside Containment Isolation Valve	30JND40AA002	34UJH05004	M	H	ES	PAM	SI	S	C/NM	Y (3)		Y (5)
MHSI 2nd RCPB Isolation Valve	30JND40AA003	30UJA11028	H	H	ES		SI	S	C/NM		Y (4)	Y (5)
MHSI Small Miniflow Line Isolation Valve	30JND40AA004	30UJA07015	H	H	ES		SI	S	C/NM		Y (4)	Y (5)
MHSI Large Miniflow Line Isolation Valve	30JND40AA005	30UJA07015	H	H	ES		SI	S	C/NM		Y (4)	Y (5)
MHSI Inside Containment Isolation Valve	30JND40AA007	30UJA07015	H	H	ES		SI	S	C/NM		Y (4)	Y (5)
MHSI Control Valve	30JND40AA103	30UJA11016	H	H	ES		SI	S	C/NM		Y (4)	Y (5)
MHSI Pump	30JND40AP001	34UJH01002	M	H	ES		SI	S	C/NM	Y (3)		Y (5)
MHSI Flowrate Sensor (WR)	30JND40CF001A	34UJH01001	M	H	ES	PAM	SI	S	C/NM	Y (3)		Y (5)
MHSI Flowrate Sensor (NR)	30JND40CF001B	34UJH01001	M	H	ES		SI	S	C/NM	Y (3)		Y (5)
MHSI Control Flowrate Sensor (WR)	30JND40CF002A	30UJA11016	H	H	ES	PAM	SI	S	C/NM		Y (4)	Y (5)
MHSI Control Flowrate Sensor (NR)	30JND40CF002B	30UJA11016	H	H	ES		SI	S	C/NM		Y (4)	Y (5)
MHSI Control Valve Position Sensor	30JND40CG803	30UJA11016	H	H	ES		SI	S	C/NM		Y (4)	Y (5)
MHSI Pump Downstream Press. Sensor	30JND40CP003	34UJH01001	M	H	ES		SI	S	C/NM	Y (3)		Y (5)
MHSI Pump Upstream Press. Ind. (Local)	30JND40CP501	34UJH01002	M	H			SI	S	C/NM	Y (3)		Y (5)
MHSI Pump Downstream Press. Ind. (Local)	30JND40CP502	34UJH01002	M	H			SI	S	C/NM	Y (3)		Y (5)
LHSI Suction Isolation Valve	30JNG10AA001	31UJH01005	M	H	ES		SI	S	C/NM	Y (3)		Y (5)
LHSI Rad. Miniflow Line Check Valve	30JNG10AA003	30UJA07014	H	H	ES		SI	S	C/NM		Y (4)	Y (5)
LHSI Tan. Miniflow Line Check Valve	30JNG10AA004	30UJA07014	H	H	ES		SI	S	C/NM		Y (4)	Y (5)
LHSI 2nd RCPB Isolation Valve	30JNG10AA006	30UJA11003	H	H	ES		SI	S	C/NM		Y (4)	Y (5)
LHSI Inside Containment Isolation Valve	30JNG10AA009	30UJA07014	H	H	ES		SI	S	C/NM		Y (4)	Y (5)
LHSI Cross-Connect Isolation Valve	30JNG10AA010	30UJA11013	H	H	ES		SI	S	C/NM		Y (4)	Y (5)
LHSI Cross-Connect Check Valve	30JNG10AA011	30UJA07014	H	H	ES		SI	S	C/NM		Y (4)	Y (5)
LHSI Cross-Connect Bypass Check Valve	30JNG10AA012	30UJA07014	H	H	ES		SI	S	C/NM		Y (4)	Y (5)
LHSI Outside Cont. Main Iso. Valve	30JNG10AA060	31UJH05004	M	H	ES	PAM	SI	S	C/NM	Y (3)		Y (5)
LHSI Outside Cont. Bypass Iso. Valve	30JNG10AA061	31UJH05004	M	H	ES	PAM	SI	S	C/NM	Y (3)		Y (5)
LHSI Heat Exchanger Main Control Valve	30JNG10AA102	31UJH05004	M	H	ES		SI	S	C/NM	Y (3)		Y (5)
LHSI Control Valve	30JNG10AA106	30UJA11013	H	H	ES		SI	S	C/NM		Y (4)	Y (5)
LHSI Discharge Line Safety Valve	30JNG10AA192	30UJA11025	H	H	ES		SI	S	C/NM		Y (4)	Y (5)
LHSI Sampling Line Isolation Valve	30JNG10AA601	31UJH05004	M	H			SI	S	C/NM	Y (3)		Y (5)
LHSI Sampling Line Isolation Valve	30JNG10AA602	31UJH05005	M	H			SI	S	C/NM	Y (3)		Y (5)
LHSI Sampling Line Isolation Valve	30JNG10AA603	31UJH05005	M	H			SI	S	C/NM	Y (3)		Y (5)
LHSI Heat Exchanger	30JNG10AC001	31UJH05005	M	H	ES		SI	S	C/NM	Y (3)		Y (5)

Table 3.10-1—List of Seismically and Dynamically Qualified Mechanical and Electrical Equipment (Sheet 52 of 197)

Name Tag (Equipment Description)	Tag Number	Local Area KKS ID (Room Location)	EQ Environment (Note 1)	Radiation Environment Zone (Note 2)	EQ Designated Function (Note 3)			Safety Class (Note 4)		EQ Program Designation (Note 5)		
LHSI Pump	30JNG10AP001	31UJH01006	M	H	ES		SI	S	C/NM	Y (3)		Y (5)
RHR Flowrate Sensor (WR)	30JNG10CF001A	31UJH01001	M	H	ES	PAM	SI	S	C/NM	Y (3)		Y (5)
RHR Flowrate Sensor (NR)	30JNG10CF001B	31UJH01001	M	H	ES		SI	S	C/NM	Y (3)		Y (5)
LHSI Control Flowrate Sensor (WR)	30JNG10CF002A	30UJA11013	H	H	ES	PAM	SI	S	C/NM		Y (4)	Y (5)
LHSI Control Flowrate Sensor (NR)	30JNG10CF002B	30UJA11013	H	H	ES		SI	S	C/NM		Y (4)	Y (5)
LHSI Disch. Line Safety Val. Pos. Sensor	30JNG10CG192B	30UJA11025	H	H	ES		SI	S	C/NM		Y (4)	Y (5)
LHSI HX Main Control Valve Pos. Sensor	30JNG10CG802	31UJH05004	M	H	ES		SI	S	C/NM	Y (3)		Y (5)
LHSI Control Valve Position Sensor	30JNG10CG806	30UJA11013	H	H	ES		SI	S	C/NM		Y (4)	Y (5)
LHSI Pump Downstream Press. Sensor	30JNG10CP003	31UJH05010	M	H	ES		SI	S	C/NM	Y (3)		Y (5)
LHSI Pump Upstream Press. Ind. (Local)	30JNG10CP501	31UJH01006	M	H			SI	S	C/NM	Y (3)		Y (5)
LHSI Pump Downstream Press. Ind. (Local)	30JNG10CP502	31UJH01006	M	H			SI	S	C/NM	Y (3)		Y (5)
LHSI Pump Downstream Temp. Sensor	30JNG10CT001	31UJH05004	M	H	ES		SI	S	C/NM	Y (3)		Y (5)
RHR Temperature Sensor	30JNG10CT002	31UJH01002	M	H	ES		SI	S	C/NM	Y (3)		Y (5)
LHSI Hot Leg Injection Isolation Valve	30JNG12AA001	31UJH05004	M	H	ES	PAM	SI	S	C/NM	Y (3)		Y (5)
LHSI Hot Leg Injection Check Valve	30JNG12AA002	31UJH05004	M	H	ES		SI	S	C/NM	Y (3)		Y (5)
Hot Leg Injection Flowrate Sensor	30JNG12CF001	31UJH01001	M	H	ES	PAM	SI	S	C/NM	Y (3)		Y (5)
Accumulator Filling Line Isolation Valve	30JNG13AA002	30UJA07014	H	H	ES		SI	S	C/NM		Y (4)	Y (5)
Accumulator Filling Line Check Valve	30JNG13AA003	30UJA07014	H	H	ES		SI	S	C/NM		Y (4)	Y (5)
SIS 1st RCPB Isolation Valve	30JNG13AA005	30UJA11002	H	H	ES		SI	S	C/NM		Y (4)	Y (5)
Accum.-Nitrogen Distribution Iso. Valve	30JNG13AA006	30UJA23013	H	H			SI	S	C/NM		Y (4)	Y (5)
Accum.-Nitrogen Distribution Check Valve	30JNG13AA007	30UJA23013	H	H			SI	S	C/NM		Y (4)	Y (5)
Accumulator Isolation Valve	30JNG13AA008	30UJA11025	H	H	ES	PAM	SI	S	C/NM		Y (4)	Y (5)
Accumulator Check Valve	30JNG13AA009	30UJA11025	H	H	ES		SI	S	C/NM		Y (4)	Y (5)
Accum. Depressurization Control Valve	30JNG13AA101	30UJA23013	H	H			SI	S	C/NM		Y (4)	Y (5)
Accumulator Safety Valve	30JNG13AA197	30UJA23013	H	H	ES		SI	S	C/NM		Y (4)	Y (5)
Accum. Depressurization Isolation Valve	30JNG13AA502	30UJA23013	H	H			SI	S	C/NM		Y (4)	Y (5)
Accum. Sampling Line Isolation Valve	30JNG13AA602	30UJA15013	H	H			SI	S	C/NM		Y (4)	Y (5)
Accumulator	30JNG13BB001	30UJA15013	H	H	ES		SI	S	C/NM		Y (4)	Y (5)
Accumulator Level Sensor 1 (NR)	30JNG13CL001	30UJA18013	H	H	ES		SI	S	C/NM		Y (4)	Y (5)
Accumulator Level Sensor 2 (NR)	30JNG13CL002	30UJA18013	H	H	ES		SI	S	C/NM		Y (4)	Y (5)
Accumulator Level Sensor (WR)	30JNG13CL003	30UJA15013	H	H	ES		SI	S	C/NM		Y (4)	Y (5)
Accumulator Level Sensor (Local)	30JNG13CL504	30UJA15013	H	H			SI	S	C/NM		Y (4)	Y (5)
Accumulator Pressure Sensor 1 (NR)	30JNG13CP001	30UJA23013	H	H	ES		SI	S	C/NM		Y (4)	Y (5)

Table 3.10-1—List of Seismically and Dynamically Qualified Mechanical and Electrical Equipment (Sheet 53 of 197)

Name Tag (Equipment Description)	Tag Number	Local Area KKS ID (Room Location)	EQ Environment (Note 1)	Radiation Environment Zone (Note 2)	EQ Designated Function (Note 3)			Safety Class (Note 4)		EQ Program Designation (Note 5)	
Accumulator Pressure Sensor 2 (NR)	30JNG13CP002	30UJA23013	H	H	ES		SI	S	C/NM	Y (4)	Y (5)
Cold Leg Injection Pressure Sensor	30JNG13CP003	30UJA07014	H	H			SI	S	C/NM	Y (4)	Y (5)
Accumulator Pressure Sensor (WR)	30JNG13CP004	30UJA23013	H	H	ES		SI	S	C/NM	Y (4)	Y (5)
Accumulator Pressure Sensor (Local)	30JNG13CP503	30UJA23013	H	H			SI	S	C/NM	Y (4)	Y (5)
Cold Leg Injection Temperature Sensor	30JNG13CT001	30UJA11003	H	H			SI	S	C/NM	Y (4)	Y (5)
Dead Leg Pressurization Valve	30JNG15AA001	30UJA11003	H	H	ES		SI	S	C/NM	Y (4)	Y (5)
RCS Suction Line Pressurization Valve	30JNG15AA002	30UJA11003	H	H	ES		SI	S	C/NM	Y (4)	Y (5)
Dead Leg Pressure Bypass Iso. Valve	30JNG15AA003	30UJA11003	H	H	ES		SI	S	C/NM	Y (4)	Y (5)
Dead Leg Pressure Control Iso. Valve	30JNG15AA004	30UJA07014	H	H	ES	PAM	SI	S	C/NM	Y (4)	Y (5)
Dead Leg Pressurization Bypass Chk Valve	30JNG15AA005	30UJA11003	H	H	ES		SI	S	C/NM	Y (4)	Y (5)
LHSI Suction Isolation Valve	30JNG20AA001	32UJH01008	M	H	ES		SI	S	C/NM	Y (3)	Y (5)
LHSI Rad. Miniflow Line Check Valve	30JNG20AA003	30UJA07014	H	H	ES		SI	S	C/NM	Y (4)	Y (5)
LHSI Tan. Miniflow Line Check Valve	30JNG20AA004	30UJA07014	H	H	ES		SI	S	C/NM	Y (4)	Y (5)
LHSI 2nd RCPB Isolation Valve	30JNG20AA006	30UJA11004	H	H	ES		SI	S	C/NM	Y (4)	Y (5)
LHSI Inside Containment Isolation Valve	30JNG20AA009	30UJA07014	H	H	ES		SI	S	C/NM	Y (4)	Y (5)
LHSI Cross-Connect Isolation Valve	30JNG20AA010	30UJA11014	H	H	ES		SI	S	C/NM	Y (4)	Y (5)
LHSI Cross-Connect Check Valve	30JNG20AA011	30UJA07014	H	H	ES		SI	S	C/NM	Y (4)	Y (5)
LHSI Outside Cont. Main Iso. Valve	30JNG20AA060	32UJH05002	M	H	ES	PAM	SI	S	C/NM	Y (3)	Y (5)
LHSI Outside Cont. Bypass Iso. Valve	30JNG20AA061	32UJH05002	M	H	ES	PAM	SI	S	C/NM	Y (3)	Y (5)
LHSI Heat Exchanger Main Control Valve	30JNG20AA102	32UJH05002	M	H	ES		SI	S	C/NM	Y (3)	Y (5)
LHSI Control Valve	30JNG20AA106	30UJA11014	H	H	ES		SI	S	C/NM	Y (4)	Y (5)
LHSI Discharge Line Safety Valve	30JNG20AA192	30UJA11026	H	H	ES		SI	S	C/NM	Y (4)	Y (5)
LHSI Sampling Line Isolation Valve	30JNG20AA601	32UJH05002	M	H			SI	S	C/NM	Y (3)	Y (5)
LHSI Sampling Line Isolation Valve	30JNG20AA602	32UJH05006	M	H			SI	S	C/NM	Y (3)	Y (5)
LHSI Sampling Line Isolation Valve	30JNG20AA603	32UJH05006	M	H			SI	S	C/NM	Y (3)	Y (5)
LHSI Heat Exchanger	30JNG20AC001	32UJH05006	M	H	ES		SI	S	C/NM	Y (3)	Y (5)
LHSI Pump	30JNG20AP001	32UJH01009	M	H	ES		SI	S	C/NM	Y (3)	Y (5)
RHR Flowrate Sensor (WR)	30JNG20CF001A	32UJH01003	M	H	ES	PAM	SI	S	C/NM	Y (3)	Y (5)
RHR Flowrate Sensor (NR)	30JNG20CF001B	32UJH01003	M	H	ES		SI	S	C/NM	Y (3)	Y (5)
LHSI Control Flowrate Sensor (WR)	30JNG20CF002A	30UJA11014	H	H	ES	PAM	SI	S	C/NM	Y (4)	Y (5)
LHSI Control Flowrate Sensor (NR)	30JNG20CF002B	30UJA11014	H	H	ES		SI	S	C/NM	Y (4)	Y (5)
LHSI Disch. Line Safety Val. Pos. Sensor	30JNG20CG192B	30UJA11026	H	H	ES		SI	S	C/NM	Y (4)	Y (5)
LHSI HX Main Control Valve Pos. Sensor	30JNG20CG802	32UJH05002	M	H	ES		SI	S	C/NM	Y (3)	Y (5)

Table 3.10-1—List of Seismically and Dynamically Qualified Mechanical and Electrical Equipment (Sheet 54 of 197)

Name Tag (Equipment Description)	Tag Number	Local Area KKS ID (Room Location)	EQ Environment (Note 1)	Radiation Environment Zone (Note 2)	EQ Designated Function (Note 3)			Safety Class (Note 4)		EQ Program Designation (Note 5)	
LHSI Control Valve Position Sensor	30JNG20CG806	30UJA11014	H	H	ES		SI	S	C/NM	Y (4)	Y (5)
LHSI Pump Downstream Press. Sensor	30JNG20CP003	32UJH05005	M	H	ES		SI	S	C/NM	Y (3)	Y (5)
LHSI Pump Upstream Press. Ind. (Local)	30JNG20CP501	32UJH01009	M	H			SI	S	C/NM	Y (3)	Y (5)
LHSI Pump Downstream Press. Ind. (Local)	30JNG20CP502	32UJH01010	M	H			SI	S	C/NM	Y (3)	Y (5)
LHSI Pump Downstream Temp. Sensor	30JNG20CT001	32UJH05002	M	H	ES		SI	S	C/NM	Y (3)	Y (5)
RHR Temperature Sensor	30JNG20CT002	32UJH01007	M	H	ES		SI	S	C/NM	Y (3)	Y (5)
LHSI Hot Leg Injection Isolation Valve	30JNG22AA001	32UJH05002	M	H	ES	PAM	SI	S	C/NM	Y (3)	Y (5)
LHSI Hot Leg Injection Check Valve	30JNG22AA002	32UJH05002	M	H	ES		SI	S	C/NM	Y (3)	Y (5)
Hot Leg Injection Flowrate Sensor	30JNG22CF001	32UJH05010	M	H	ES	PAM	SI	S	C/NM	Y (3)	Y (5)
Accumulator Filling Line Isolation Valve	30JNG23AA002	30UJA07014	H	H	ES		SI	S	C/NM	Y (4)	Y (5)
Accumulator Filling Line Check Valve	30JNG23AA003	30UJA07014	H	H	ES		SI	S	C/NM	Y (4)	Y (5)
SIS 1st RCPB Isolation Valve	30JNG23AA005	30UJA11005	H	H	ES		SI	S	C/NM	Y (4)	Y (5)
Accum.-Nitrogen Distribution Iso. Valve	30JNG23AA006	30UJA23014	H	H			SI	S	C/NM	Y (4)	Y (5)
Accum.-Nitrogen Distribution Check Valve	30JNG23AA007	30UJA23014	H	H			SI	S	C/NM	Y (4)	Y (5)
Accumulator Isolation Valve	30JNG23AA008	30UJA11026	H	H	ES	PAM	SI	S	C/NM	Y (4)	Y (5)
Accumulator Check Valve	30JNG23AA009	30UJA11026	H	H	ES		SI	S	C/NM	Y (4)	Y (5)
Accum. Depressurization Control Valve	30JNG23AA101	30UJA23014	H	H			SI	S	C/NM	Y (4)	Y (5)
Accumulator Safety Valve	30JNG23AA197	30UJA23014	H	H	ES		SI	S	C/NM	Y (4)	Y (5)
Accum. Depressurization Isolation Valve	30JNG23AA502	30UJA23014	H	H			SI	S	C/NM	Y (4)	Y (5)
Accum. Sampling Line Isolation Valve	30JNG23AA602	30UJA15014	H	H			SI	S	C/NM	Y (4)	Y (5)
Accumulator	30JNG23BB001	30UJA15014	H	H	ES		SI	S	C/NM	Y (4)	Y (5)
Accumulator Level Sensor 1 (NR)	30JNG23CL001	30UJA18014	H	H	ES		SI	S	C/NM	Y (4)	Y (5)
Accumulator Level Sensor 2 (NR)	30JNG23CL002	30UJA18014	H	H	ES		SI	S	C/NM	Y (4)	Y (5)
Accumulator Level Sensor (WR)	30JNG23CL003	30UJA15014	H	H	ES		SI	S	C/NM	Y (4)	Y (5)
Accumulator Level Sensor (Local)	30JNG23CL504	30UJA15014	H	H			SI	S	C/NM	Y (4)	Y (5)
Accumulator Pressure Sensor 1 (NR)	30JNG23CP001	30UJA23014	H	H	ES		SI	S	C/NM	Y (4)	Y (5)
Accumulator Pressure Sensor 2 (NR)	30JNG23CP002	30UJA23014	H	H	ES		SI	S	C/NM	Y (4)	Y (5)
Cold Leg Injection Pressure Sensor	30JNG23CP003	30UJA07014	H	H			SI	S	C/NM	Y (4)	Y (5)
Accumulator Pressure Sensor (WR)	30JNG23CP004	30UJA23014	H	H	ES		SI	S	C/NM	Y (4)	Y (5)
Accumulator Pressure Sensor (Local)	30JNG23CP503	30UJA23014	H	H			SI	S	C/NM	Y (4)	Y (5)
Cold Leg Injection Temperature Sensor	30JNG23CT001	30UJA11004	H	H			SI	S	C/NM	Y (4)	Y (5)
Dead Leg Pressurization Valve	30JNG25AA001	30UJA11004	H	H	ES		SI	S	C/NM	Y (4)	Y (5)
RCS Suction Line Pressurization Valve	30JNG25AA002	30UJA11004	H	H	ES		SI	S	C/NM	Y (4)	Y (5)

Table 3.10-1—List of Seismically and Dynamically Qualified Mechanical and Electrical Equipment (Sheet 55 of 197)

Name Tag (Equipment Description)	Tag Number	Local Area KKS ID (Room Location)	EQ Environment (Note 1)	Radiation Environment Zone (Note 2)	EQ Designated Function (Note 3)			Safety Class (Note 4)		EQ Program Designation (Note 5)		
Dead Leg Pressure Bypass Iso. Valve	30JNG25AA003	30UJA11004	H	H	ES		SI	S	C/NM		Y (4)	Y (5)
Dead Leg Pressure Control Iso. Valve	30JNG25AA004	30UJA07014	H	H	ES	PAM	SI	S	C/NM		Y (4)	Y (5)
Dead Leg Pressurization Bypass Chk Valve	30JNG25AA005	30UJA11004	H	H	ES		SI	S	C/NM		Y (4)	Y (5)
LHSI Suction Isolation Valve	30JNG30AA001	33UJH01008	M	H	ES		SI	S	C/NM	Y (3)		Y (5)
LHSI Rad. Miniflow Line Check Valve	30JNG30AA003	30UJA07015	H	H	ES		SI	S	C/NM		Y (4)	Y (5)
LHSI Tan. Miniflow Line Check Valve	30JNG30AA004	30UJA07015	H	H	ES		SI	S	C/NM		Y (4)	Y (5)
LHSI 2nd RCPB Isolation Valve	30JNG30AA006	30UJA11027	H	H	ES		SI	S	C/NM		Y (4)	Y (5)
LHSI Inside Containment Isolation Valve	30JNG30AA009	30UJA07015	H	H	ES		SI	S	C/NM		Y (4)	Y (5)
LHSI Cross-Connect Isolation Valve	30JNG30AA010	30UJA11015	H	H	ES		SI	S	C/NM		Y (4)	Y (5)
LHSI Cross-Connect Check Valve	30JNG30AA011	30UJA07015	H	H	ES		SI	S	C/NM		Y (4)	Y (5)
LHSI Outside Cont. Main Iso. Valve	30JNG30AA060	33UJH05002	M	H	ES	PAM	SI	S	C/NM	Y (3)		Y (5)
LHSI Outside Cont. Bypass Iso. Valve	30JNG30AA061	33UJH05002	M	H	ES	PAM	SI	S	C/NM	Y (3)		Y (5)
LHSI Heat Exchanger Main Control Valve	30JNG30AA102	33UJH05002	M	H	ES		SI	S	C/NM	Y (3)		Y (5)
LHSI Control Valve	30JNG30AA106	30UJA11015	H	H	ES		SI	S	C/NM		Y (4)	Y (5)
LHSI Discharge Line Safety Valve	30JNG30AA192	30UJA11027	H	H	ES		SI	S	C/NM		Y (4)	Y (5)
LHSI Sampling Line Isolation Valve	30JNG30AA601	33UJH05002	M	H			SI	S	C/NM	Y (3)		Y (5)
LHSI Sampling Line Isolation Valve	30JNG30AA602	33UJH05006	M	H			SI	S	C/NM	Y (3)		Y (5)
LHSI Sampling Line Isolation Valve	30JNG30AA603	33UJH05006	M	H			SI	S	C/NM	Y (3)		Y (5)
LHSI Heat Exchanger	30JNG30AC001	33UJH05006	M	H	ES		SI	S	C/NM	Y (3)		Y (5)
LHSI Pump	30JNG30AP001	33UJH01009	M	H	ES		SI	S	C/NM	Y (3)		Y (5)
RHR Flowrate Sensor (WR)	30JNG30CF001A	33UJH01003	M	H	ES	PAM	SI	S	C/NM	Y (3)		Y (5)
RHR Flowrate Sensor (NR)	30JNG30CF001B	33UJH01003	M	H	ES		SI	S	C/NM	Y (3)		Y (5)
LHSI Control Flowrate Sensor (WR)	30JNG30CF002A	30UJA11015	H	H	ES	PAM	SI	S	C/NM		Y (4)	Y (5)
LHSI Control Flowrate Sensor (NR)	30JNG30CF002B	30UJA11015	H	H	ES		SI	S	C/NM		Y (4)	Y (5)
LHSI Disch. Line Safety Val. Pos. Sensor	30JNG30CG192B	30UJA11027	H	H	ES		SI	S	C/NM		Y (4)	Y (5)
LHSI HX Main Control Valve Pos. Sensor	30JNG30CG802	33UJH05002	M	H	ES		SI	S	C/NM	Y (3)		Y (5)
LHSI Control Valve Position Sensor	30JNG30CG806	30UJA11015	H	H	ES		SI	S	C/NM		Y (4)	Y (5)
LHSI Pump Downstream Press. Sensor	30JNG30CP003	33UJH05005	M	H	ES		SI	S	C/NM	Y (3)		Y (5)
LHSI Pump Upstream Press. Ind. (Local)	30JNG30CP501	33UJH01009	M	H			SI	S	C/NM	Y (3)		Y (5)
LHSI Pump Downstream Press. Ind. (Local)	30JNG30CP502	33UJH01009	M	H			SI	S	C/NM	Y (3)		Y (5)
LHSI Pump Downstream Temp. Sensor	30JNG30CT001	33UJH05002	M	H	ES		SI	S	C/NM	Y (3)		Y (5)
RHR Temperature Sensor	30JNG30CT002	33UJH01007	M	H	ES		SI	S	C/NM	Y (3)		Y (5)
LHSI Hot Leg Injection Isolation Valve	30JNG32AA001	33UJH05002	M	H	ES	PAM	SI	S	C/NM	Y (3)		Y (5)

Table 3.10-1—List of Seismically and Dynamically Qualified Mechanical and Electrical Equipment (Sheet 56 of 197)

Name Tag (Equipment Description)	Tag Number	Local Area KKS ID (Room Location)	EQ Environment (Note 1)	Radiation Environment Zone (Note 2)	EQ Designated Function (Note 3)			Safety Class (Note 4)		EQ Program Designation (Note 5)		
LHSI Hot Leg Injection Check Valve	30JNG32AA002	33UJH05002	M	H	ES		SI	S	C/NM	Y (3)		Y (5)
Hot Leg Injection Flowrate Sensor	30JNG32CF001	33UJH05010	M	H	ES	PAM	SI	S	C/NM	Y (3)		Y (5)
Accumulator Filling Line Isolation Valve	30JNG33AA002	30UJA07015	H	H	ES		SI	S	C/NM		Y (4)	Y (5)
Accumulator Filling Line Check Valve	30JNG33AA003	30UJA07015	H	H	ES		SI	S	C/NM		Y (4)	Y (5)
SIS 1st RCPB Isolation Valve	30JNG33AA005	30UJA11006	H	H	ES		SI	S	C/NM		Y (4)	Y (5)
Accum.-Nitrogen Distribution Iso. Valve	30JNG33AA006	30UJA23015	H	H			SI	S	C/NM		Y (4)	Y (5)
Accum.-Nitrogen Distribution Check Valve	30JNG33AA007	30UJA23015	H	H			SI	S	C/NM		Y (4)	Y (5)
Accumulator Isolation Valve	30JNG33AA008	30UJA11027	H	H	ES	PAM	SI	S	C/NM		Y (4)	Y (5)
Accumulator Check Valve	30JNG33AA009	30UJA11027	H	H	ES		SI	S	C/NM		Y (4)	Y (5)
Accum. Depressurization Control Valve	30JNG33AA101	30UJA23015	H	H			SI	S	C/NM		Y (4)	Y (5)
Accumulator Safety Valve	30JNG33AA197	30UJA23015	H	H	ES		SI	S	C/NM		Y (4)	Y (5)
Accum. Depressurization Isolation Valve	30JNG33AA502	30UJA23015	H	H			SI	S	C/NM		Y (4)	Y (5)
Accum. Sampling Line Isolation Valve	30JNG33AA602	30UJA15015	H	H			SI	S	C/NM		Y (4)	Y (5)
Accumulator	30JNG33BB001	30UJA15015	H	H	ES		SI	S	C/NM		Y (4)	Y (5)
Accumulator Level Sensor 1 (NR)	30JNG33CL001	30UJA18015	H	H	ES		SI	S	C/NM		Y (4)	Y (5)
Accumulator Level Sensor 2 (NR)	30JNG33CL002	30UJA18015	H	H	ES		SI	S	C/NM		Y (4)	Y (5)
Accumulator Level Sensor (WR)	30JNG33CL003	30UJA15015	H	H	ES		SI	S	C/NM		Y (4)	Y (5)
Accumulator Level Sensor (Local)	30JNG33CL504	30UJA15015	H	H			SI	S	C/NM		Y (4)	Y (5)
Accumulator Pressure Sensor 1 (NR)	30JNG33CP001	30UJA23015	H	H	ES		SI	S	C/NM		Y (4)	Y (5)
Accumulator Pressure Sensor 2 (NR)	30JNG33CP002	30UJA23015	H	H	ES		SI	S	C/NM		Y (4)	Y (5)
Cold Leg Injection Pressure Sensor	30JNG33CP003	30UJA07015	H	H			SI	S	C/NM		Y (4)	Y (5)
Accumulator Pressure Sensor (WR)	30JNG33CP004	30UJA23015	H	H	ES		SI	S	C/NM		Y (4)	Y (5)
Accumulator Pressure Sensor (Local)	30JNG33CP503	30UJA23015	H	H			SI	S	C/NM		Y (4)	Y (5)
Cold Leg Injection Temperature Sensor	30JNG33CT001	30UJA11007	H	H			SI	S	C/NM		Y (4)	Y (5)
Dead Leg Pressurization Valve	30JNG35AA001	30UJA11007	H	H	ES		SI	S	C/NM		Y (4)	Y (5)
RCS Suction Line Pressurization Valve	30JNG35AA002	30UJA11007	H	H	ES		SI	S	C/NM		Y (4)	Y (5)
Dead Leg Pressure Bypass Iso. Valve	30JNG35AA003	30UJA11007	H	H	ES		SI	S	C/NM		Y (4)	Y (5)
Dead Leg Pressure Control Iso. Valve	30JNG35AA004	30UJA07015	H	H	ES	PAM	SI	S	C/NM		Y (4)	Y (5)
Dead Leg Pressurization Bypass Chk Valve	30JNG35AA005	30UJA11007	H	H	ES		SI	S	C/NM		Y (4)	Y (5)
LHSI Suction Isolation Valve	30JNG40AA001	34UJH01005	M	H	ES		SI	S	C/NM	Y (3)		Y (5)
LHSI Rad. Miniflow Line Check Valve	30JNG40AA003	30UJA07015	H	H	ES		SI	S	C/NM		Y (4)	Y (5)
LHSI Tan. Miniflow Line Check Valve	30JNG40AA004	30UJA07015	H	H	ES		SI	S	C/NM		Y (4)	Y (5)
LHSI 2nd RCPB Isolation Valve	30JNG40AA006	30UJA11028	H	H	ES		SI	S	C/NM		Y (4)	Y (5)

Table 3.10-1—List of Seismically and Dynamically Qualified Mechanical and Electrical Equipment (Sheet 57 of 197)

Name Tag (Equipment Description)	Tag Number	Local Area KKS ID (Room Location)	EQ Environment (Note 1)	Radiation Environment Zone (Note 2)	EQ Designated Function (Note 3)			Safety Class (Note 4)		EQ Program Designation (Note 5)		
SAHRS-IRWST 1st Isolation Valve	30JNG40AA007	34UJH01006	M	H	ES		SI	S	C/NM	Y (3)		Y (5)
SAHRS-IRWST 2nd Isolation Valve	30JNG40AA008	34UJH01006	M	H	ES		SI	S	C/NM	Y (3)		Y (5)
LHSI Inside Containment Isolation Valve	30JNG40AA009	30UJA07015	H	H	ES		SI	S	C/NM		Y (4)	Y (5)
LHSI Cross-Connect Isolation Valve	30JNG40AA010	30UJA11016	H	H	ES		SI	S	C/NM		Y (4)	Y (5)
LHSI Cross-Connect Check Valve	30JNG40AA011	30UJA07015	H	H	ES		SI	S	C/NM		Y (4)	Y (5)
LHSI Cross-Connect Bypass Check Valve	30JNG40AA012	30UJA07015	H	H	ES		SI	S	C/NM		Y (4)	Y (5)
LHSI Outside Cont. Main Iso. Valve	30JNG40AA060	34UJH05004	M	H	ES	PAM	SI	S	C/NM	Y (3)		Y (5)
LHSI Outside Cont. Bypass Iso. Valve	30JNG40AA061	34UJH05004	M	H	ES	PAM	SI	S	C/NM	Y (3)		Y (5)
LHSI Heat Exchanger Main Control Valve	30JNG40AA102	34UJH05004	M	H	ES		SI	S	C/NM	Y (3)		Y (5)
LHSI Control Valve	30JNG40AA106	30UJA11016	H	H	ES		SI	S	C/NM		Y (4)	Y (5)
LHSI Discharge Line Safety Valve	30JNG40AA192	30UJA11028	H	H	ES		SI	S	C/NM		Y (4)	Y (5)
LHSI Sampling Line Isolation Valve	30JNG40AA601	34UJH05004	M	H			SI	S	C/NM	Y (3)		Y (5)
LHSI Sampling Line Isolation Valve	30JNG40AA602	34UJH05005	M	H			SI	S	C/NM	Y (3)		Y (5)
LHSI Sampling Line Isolation Valve	30JNG40AA603	34UJH05005	M	H			SI	S	C/NM	Y (3)		Y (5)
LHSI Heat Exchanger	30JNG40AC001	34UJH05005	M	H	ES		SI	S	C/NM	Y (3)		Y (5)
LHSI Pump	30JNG40AP001	34UJH01006	M	H	ES		SI	S	C/NM	Y (3)		Y (5)
RHR Flowrate Sensor (WR)	30JNG40CF001A	34UJH01001	M	H	ES	PAM	SI	S	C/NM	Y (3)		Y (5)
RHR Flowrate Sensor (NR)	30JNG40CF001B	34UJH01001	M	H	ES		SI	S	C/NM	Y (3)		Y (5)
LHSI Control Flowrate Sensor (WR)	30JNG40CF002A	30UJA11016	H	H	ES	PAM	SI	S	C/NM		Y (4)	Y (5)
LHSI Control Flowrate Sensor (NR)	30JNG40CF002B	30UJA11016	H	H	ES		SI	S	C/NM		Y (4)	Y (5)
LHSI Disch. Line Safety Val. Pos. Sensor	30JNG40CG192B	30UJA11028	H	H	ES		SI	S	C/NM		Y (4)	Y (5)
LHSI HX Main Control Valve Pos. Sensor	30JNG40CG802	34UJH05004	M	H	ES		SI	S	C/NM	Y (3)		Y (5)
LHSI Control Valve Position Sensor	30JNG40CG806	30UJA11016	H	H	ES		SI	S	C/NM		Y (4)	Y (5)
LHSI Pump Downstream Press. Sensor	30JNG40CP003	34UJH05006	M	H	ES		SI	S	C/NM	Y (3)		Y (5)
LHSI Pump Upstream Press. Ind. (Local)	30JNG40CP501	34UJH01006	M	H			SI	S	C/NM	Y (3)		Y (5)
LHSI Pump Downstream Press. Ind. (Local)	30JNG40CP502	34UJH01006	M	H			SI	S	C/NM	Y (3)		Y (5)
LHSI Pump Downstream Temp. Sensor	30JNG40CT001	34UJH05004	M	H	ES		SI	S	C/NM	Y (3)		Y (5)
RHR Temperature Sensor	30JNG40CT002	34UJH01002	M	H	ES		SI	S	C/NM	Y (3)		Y (5)
LHSI Hot Leg Injection Isolation Valve	30JNG42AA001	34UJH05004	M	H	ES	PAM	SI	S	C/NM	Y (3)		Y (5)
LHSI Hot Leg Injection Check Valve	30JNG42AA002	34UJH05004	M	H	ES		SI	S	C/NM	Y (3)		Y (5)
Hot Leg Injection Flowrate Sensor	30JNG42CF001	34UJH01001	M	H	ES	PAM	SI	S	C/NM	Y (3)		Y (5)
Accumulator Filling Line Isolation Valve	30JNG43AA002	30UJA07015	H	H	ES		SI	S	C/NM		Y (4)	Y (5)
Accumulator Filling Line Check Valve	30JNG43AA003	30UJA07015	H	H	ES		SI	S	C/NM		Y (4)	Y (5)

Table 3.10-1—List of Seismically and Dynamically Qualified Mechanical and Electrical Equipment (Sheet 58 of 197)

Name Tag (Equipment Description)	Tag Number	Local Area KKS ID (Room Location)	EQ Environment (Note 1)	Radiation Environment Zone (Note 2)	EQ Designated Function (Note 3)			Safety Class (Note 4)		EQ Program Designation (Note 5)	
SIS 1st RCPB Isolation Valve	30JNG43AA005	30UJA11009	H	H	ES		SI	S	C/NM	Y (4)	Y (5)
Accum.-Nitrogen Distribution Iso. Valve	30JNG43AA006	30UJA23016	H	H			SI	S	C/NM	Y (4)	Y (5)
Accum.-Nitrogen Distribution Check Valve	30JNG43AA007	30UJA23016	H	H			SI	S	C/NM	Y (4)	Y (5)
Accumulator Isolation Valve	30JNG43AA008	30UJA11028	H	H	ES	PAM	SI	S	C/NM	Y (4)	Y (5)
Accumulator Check Valve	30JNG43AA009	30UJA11028	H	H	ES		SI	S	C/NM	Y (4)	Y (5)
Accum. Depressurization Control Valve	30JNG43AA101	30UJA23016	H	H			SI	S	C/NM	Y (4)	Y (5)
Accumulator Safety Valve	30JNG43AA197	30UJA23016	H	H	ES		SI	S	C/NM	Y (4)	Y (5)
Accum. Depressurization Isolation Valve	30JNG43AA502	30UJA23016	H	H			SI	S	C/NM	Y (4)	Y (5)
Accum. Sampling Line Isolation Valve	30JNG43AA602	30UJA15016	H	H			SI	S	C/NM	Y (4)	Y (5)
Accumulator	30JNG43BB001	30UJA15016	H	H	ES		SI	S	C/NM	Y (4)	Y (5)
Accumulator Level Sensor 1 (NR)	30JNG43CL001	30UJA18016	H	H	ES		SI	S	C/NM	Y (4)	Y (5)
Accumulator Level Sensor 2 (NR)	30JNG43CL002	30UJA18016	H	H	ES		SI	S	C/NM	Y (4)	Y (5)
Accumulator Level Sensor (WR)	30JNG43CL003	30UJA15016	H	H	ES		SI	S	C/NM	Y (4)	Y (5)
Accumulator Level Sensor (Local)	30JNG43CL504	30UJA15016	H	H			SI	S	C/NM	Y (4)	Y (5)
Accumulator Pressure Sensor 1 (NR)	30JNG43CP001	30UJA23016	H	H	ES		SI	S	C/NM	Y (4)	Y (5)
Accumulator Pressure Sensor 2 (NR)	30JNG43CP002	30UJA23016	H	H	ES		SI	S	C/NM	Y (4)	Y (5)
Cold Leg Injection Pressure Sensor	30JNG43CP003	30UJA07015	H	H			SI	S	C/NM	Y (4)	Y (5)
Accumulator Pressure Sensor (WR)	30JNG43CP004	30UJA23016	H	H	ES		SI	S	C/NM	Y (4)	Y (5)
Accumulator Pressure Sensor (Local)	30JNG43CP503	30UJA23016	H	H			SI	S	C/NM	Y (4)	Y (5)
Cold Leg Injection Temperature Sensor	30JNG43CT001	30UJA11008	H	H			SI	S	C/NM	Y (4)	Y (5)
Dead Leg Pressurization Valve	30JNG45AA001	30UJA11008	H	H	ES		SI	S	C/NM	Y (4)	Y (5)
RCS Suction Line Pressurization Valve	30JNG45AA002	30UJA11008	H	H	ES		SI	S	C/NM	Y (4)	Y (5)
Dead Leg Pressure Bypass Iso. Valve	30JNG45AA003	30UJA11008	H	H	ES		SI	S	C/NM	Y (4)	Y (5)
Dead Leg Pressure Control Iso. Valve	30JNG45AA004	30UJA07015	H	H	ES	PAM	SI	S	C/NM	Y (4)	Y (5)
Dead Leg Pressurization Bypass Chk Valve	30JNG45AA005	30UJA11008	H	H	ES		SI	S	C/NM	Y (4)	Y (5)
Component Cooling Water System (CCWS)											
CK-V KAA10 AC001 Outlet	30KAA10AA004	31UJH10026	M	H	ES		SI	S	C/NM	Y (3)	Y (5)
V Dnstr KAA10 AC001	30KAA10AA005	31UJH10026	M	H	ES		SI	S	C/NM	Y (3)	Y (5)
QCL-V KAA10 TO COM1B	30KAA10AA006	31UJH10004	M	H	ES		SI	S	C/NM	Y (3)	Y (5)
V Dnstr KAA10 AC002	30KAA10AA007	31UJH01026	M	H	ES		SI	S	C/NM	Y (3)	Y (5)
V Upstr KAA10 AC002	30KAA10AA008	31UJH01026	M	H	ES		SI	S	C/NM	Y (3)	Y (5)
QCL-V COM1B TO KAA10	30KAA10AA010	31UJH10004	M	H	ES		SI	S	C/NM	Y (3)	Y (5)
V Sur Tank to PP10	30KAA10AA011	31UJH01026	M	H	ES		SI	S	C/NM	Y (3)	Y (5)

Table 3.10-1—List of Seismically and Dynamically Qualified Mechanical and Electrical Equipment (Sheet 59 of 197)

Name Tag (Equipment Description)	Tag Number	Local Area KKS ID (Room Location)	EQ Environment (Note 1)	Radiation Environment Zone (Note 2)	EQ Designated Function (Note 3)		Safety Class (Note 4)		EQ Program Designation (Note 5)	
V Upstr KAA10 AT001	30KAA10AA015	31UJH01026	M	H	ES	SI	S	C/NM	Y (3)	Y (5)
V Dnstr KAA10 AP001	30KAA10AA018	31UJH01026	M	H	ES	SI	S	C/NM	Y (3)	Y (5)
V Min Flow KAA10 AP001	30KAA10AA022	31UJH01026	M	H	ES	SI	S	C/NM	Y (3)	Y (5)
Dwds Sup Isol KAA10	30KAA10AA027	31UJH01024	M	H	ES	SI	S	C/NM	Y (3)	Y (5)
V Hydrazine Supply KAA10	30KAA10AA028	31UJH01024	M	H	ES	SI	S	C/NM	Y (3)	Y (5)
V Radn Mon to KAA10	30KAA10AA029	31UJH05026	M	H	ES	SI	S	C/NM	Y (3)	Y (5)
V KAA10 to Radn Mon	30KAA10AA030	31UJH05026	M	H	ES	SI	S	C/NM	Y (3)	Y (5)
QCL-V COM1A to KAA10	30KAA10AA032	31UJH10004	M	H	ES	SI	S	C/NM	Y (3)	Y (5)
QCL-V KAA10 to COM1A	30KAA10AA033	31UJH10004	M	H	ES	SI	S	C/NM	Y (3)	Y (5)
Tr 1 SUR Tk Lvl 2 Upper Isol	30KAA10AA034	31UJK31027	M	M	ES	SI	S	C/NM		Y (5)
Tr 1 SUR Tk Lvl 1 Upper Isol	30KAA10AA035	31UJK31026	M	M	ES	SI	S	C/NM		Y (5)
Tr 1 SUR Tk Lvl 1 Lwr Isol	30KAA10AA036	31UJK31026	M	M	ES	SI	S	C/NM		Y (5)
Tr 1 SUR Tk Lvl 2 Lwr Isol	30KAA10AA037	31UJK31027	M	M	ES	SI	S	C/NM		Y (5)
Byp-V KAA10AC001	30KAA10AA112	31UJH10026	M	H	ES	SI	S	C/NM	Y (3)	Y (5)
FAJ-V MFL KAA PP1	30KAA10AA123	31UJH01026	M	H	ES	SI	S	C/NM	Y (3)	Y (5)
FAJ-V KAA10 AC002 LN	30KAA10AA140	31UJH01026	M	H	ES	SI	S	C/NM	Y (3)	Y (5)
RL-V CCW PP1 Mtr Clr	30KAA10AA191	31UJH01026	M	H	ES	SI	S	C/NM	Y (3)	Y (5)
V P KAA10 CP274	30KAA10AA301	31UJH01026	M	H	ES	SI	S	C/NM	Y (3)	Y (5)
V P KAA10 CP274	30KAA10AA302	31UJH01026	M	H	ES	SI	S	C/NM	Y (3)	Y (5)
V P KAA10 CP578	30KAA10AA303	31UJH01026	M	H	ES	SI	S	C/NM	Y (3)	Y (5)
V F KAA10 CF570	30KAA10AA304	31UJH01026	M	H	ES	SI	S	C/NM	Y (3)	Y (5)
V F KAA10 CF570	30KAA10AA305	31UJH01026	M	H	ES	SI	S	C/NM	Y (3)	Y (5)
V F KAA10 CF053	30KAA10AA306	31UJH10026	M	H	ES	SI	S	C/NM	Y (3)	Y (5)
V P KAA10 CP053	30KAA10AA307	31UJH10026	M	H	ES	SI	S	C/NM	Y (3)	Y (5)
V P KAA10 CP083	30KAA10AA308	31UJH01026	M	H	ES	SI	S	C/NM	Y (3)	Y (5)
V P KAA10 CP579	30KAA10AA309	31UJH01026	M	H	ES	SI	S	C/NM	Y (3)	Y (5)
V P KAA10 CP051	30KAA10AA310	31UJH10026	M	H	ES	SI	S	C/NM	Y (3)	Y (5)
V P KAA10 CP051	30KAA10AA311	31UJH10026	M	H	ES	SI	S	C/NM	Y (3)	Y (5)
V P KAA10 CP297	30KAA10AA312	31UJH10026	M	H	ES	SI	S	C/NM	Y (3)	Y (5)
V P KAA10 CP587	30KAA10AA313	31UJH10026	M	H	ES	SI	S	C/NM	Y (3)	Y (5)
I-V KAA10 CP591	30KAA10AA314	31UJH01026	M	H	ES	SI	S	C/NM	Y (3)	Y (5)
V L KAA10 CL099	30KAA10AA315	31UJK31027	M	M	ES	SI	S	C/NM		Y (5)
V L KAA10 CL099	30KAA10AA316	31UJK31027	M	M	ES	SI	S	C/NM		Y (5)

Table 3.10-1—List of Seismically and Dynamically Qualified Mechanical and Electrical Equipment (Sheet 60 of 197)

Name Tag (Equipment Description)	Tag Number	Local Area KKS ID (Room Location)	EQ Environment (Note 1)	Radiation Environment Zone (Note 2)	EQ Designated Function (Note 3)		Safety Class (Note 4)		EQ Program Designation (Note 5)	
V L KAA10 CL094	30KAA10AA317	31UJK31026	M	M	ES	SI	S	C/NM		Y (5)
V L KAA10 CL094	30KAA10AA318	31UJK31026	M	M	ES	SI	S	C/NM		Y (5)
I-V UPR KAA10 CF240	30KAA10AA319	31UJH01026	M	H	ES	SI	S	C/NM	Y (3)	Y (5)
I-V DWR KAA10 CF240	30KAA10AA320	31UJH01026	M	H	ES	SI	S	C/NM	Y (3)	Y (5)
V F KAA10 CF057	30KAA10AA321	31UJH01024	M	H	ES	SI	S	C/NM	Y (3)	Y (5)
V F KAA10 CF057	30KAA10AA322	31UJH01024	M	H	ES	SI	S	C/NM	Y (3)	Y (5)
D-V SUR TK10	30KAA10AA401	31UJH01026	M	H	ES	SI	S	C/NM	Y (3)	Y (5)
D-V PP10 Suc	30KAA10AA402	31UJH01026	M	H	ES	SI	S	C/NM	Y (3)	Y (5)
D-V HX10 Shl	30KAA10AA403	31UJH10026	M	H	ES	SI	S	C/NM	Y (3)	Y (5)
D-V Rtnr PP10 Mtr Cl	30KAA10AA404	31UJH01026	M	H	ES	SI	S	C/NM	Y (3)	Y (5)
D-V Suct Strn Tm10	30KAA10AA405	31UJH01026	M	H	ES	SI	S	C/NM	Y (3)	Y (5)
D-V Min Flow PP10	30KAA10AA406	31UJH01026	M	H	ES	SI	S	C/NM	Y (3)	Y (5)
D-V Sur Tk Lvl 2 Colmn Tr 1	30KAA10AA407	31UJK31027	M	M	ES	SI	S	C/NM		Y (5)
D-V Sur Tk Lvl 1 Colmn Tr 1	30KAA10AA408	31UJK31026	M	M	ES	SI	S	C/NM		Y (5)
D-V HX10 Shl	30KAA10AA409	31UJH10026	M	H	ES	SI	S	C/NM	Y (3)	Y (5)
D-V Dnstr HX10	30KAA10AA410	31UJH10026	M	H	ES	SI	S	C/NM	Y (3)	Y (5)
D-V PP10 Disch	30KAA10AA411	31UJH01026	M	H	ES	SI	S	C/NM	Y (3)	Y (5)
D-V Sup PP10 Mtr Cl	30KAA10AA413	31UJH10026	M	H	ES	SI	S	C/NM	Y (3)	Y (5)
V-V HX10 Shl	30KAA10AA501	31UJH10026	M	H	ES	SI	S	C/NM	Y (3)	Y (5)
V-V Dnstr HX10	30KAA10AA502	31UJH10004	M	H	ES	SI	S	C/NM	Y (3)	Y (5)
V-V HX10 Shl	30KAA10AA503	31UJH10004	M	H	ES	SI	S	C/NM	Y (3)	Y (5)
V-V Upstr PP10	30KAA10AA504	31UJH10026	M	H	ES	SI	S	C/NM	Y (3)	Y (5)
V-V Sur Tk Lvl 1 Colmn Tr 1	30KAA10AA505	31UJK31026	M	M	ES	SI	S	C/NM		Y (5)
V-v Sur Tk Lvl 2 Colmn Tr 1	30KAA10AA506	31UJK31027	M	M	ES	SI	S	C/NM		Y (5)
HX CCWS Tr 1	30KAA10AC001	31UJH10026	M	H	ES	SI	S	C/NM	Y (3)	Y (5)
HX CCWS PP Mtr Clr Tr 1	30KAA10AC002	31UJH01026	M	H	ES	SI	S	C/NM	Y (3)	Y (5)
MTR Htr CCWS PP Tr 1	30KAA10AH500	31UJH01026	M	H		SII	NS-AQ			Y (5)
PP CCWS Tr 1	30KAA10AP001	31UJH01026	M	H	ES	SI	S	C/NM	Y (3)	Y (5)
Strnr CCWS PP Suction Tr 1	30KAA10AT001	31UJH01026	M	H	ES	SI	S	C/NM	Y (3)	Y (5)
SUR TK CCWS TR 1	30KAA10BB001	31UJK31025	M	M	ES	SI	S	C/NM		Y (5)
Tk Tr 1 Sur Tk Lvl 2 Column	30KAA10BB301	31UJK31027	M	M	ES	SI	S	C/NM		Y (5)
Tk Tr 1 Sur Tk Lvl 1 Column	30KAA10BB302	31UJK31026	M	M	ES	SI	S	C/NM		Y (5)
CTR-V Dw Trn10	30KAA10CF057	31UJH01024	M	H		SI	S	C/NM	Y (3)	Y (5)

Table 3.10-1—List of Seismically and Dynamically Qualified Mechanical and Electrical Equipment (Sheet 61 of 197)

Name Tag (Equipment Description)	Tag Number	Local Area KKS ID (Room Location)	EQ Environment (Note 1)	Radiation Environment Zone (Note 2)	EQ Designated Function (Note 3)	Safety Class (Note 4)		EQ Program Designation (Note 5)	
F Trn10 HX Out Test Meas	30KAA10CF255	31UJH10026	M	H	SI	S	C/NM	Y (3)	Y (5)
F Retn Sur Tk10 Meas	30KAA10CF570	31UJH01026	M	H	SI	S	C/NM	Y (3)	Y (5)
L Sur Tk10 Meas	30KAA10CL598	31UJK31027	M	M	SI	S	C/NM		Y (5)
DP HX10 Meas	30KAA10CP051	31UJH05026	M	H	SI	S	C/NM	Y (3)	Y (5)
Dp Suct Stm10	30KAA10CP274	31UJH01026	M	H	SI	S	C/NM	Y (3)	Y (5)
P Dnstr HX10	30KAA10CP297	31UJH10026	M	H	SI	S	C/NM	Y (3)	Y (5)
P Upstr PP10	30KAA10CP578	31UJH01026	M	H	SI	S	C/NM	Y (3)	Y (5)
P Test Dnstr Pp10	30KAA10CP579	31UJH01026	M	H	SI	S	C/NM	Y (3)	Y (5)
T Cw Users Trn10	30KAA10CP587	31UJH10026	M	H	SI	S	C/NM	Y (3)	Y (5)
P M CL PP10	30KAA10CP591	31UJH01026	M	H	SI	S	C/NM	Y (3)	Y (5)
T Outl HX10 Meas	30KAA10CT090	31UJH10026	M	H	SI	S	C/NM	Y (3)	Y (5)
T Inl HX10 Meas	30KAA10CT092	31UJH01026	M	H	SI	S	C/NM	Y (3)	Y (5)
T Retn CCWS PP CL1	30KAA10CT288	31UJH01026	M	H	SI	S	C/NM	Y (3)	Y (5)
Isol-V JNG10 AC001	30KAA12AA005	31UJH10004	M	H	ES SI	S	C/NM	Y (3)	Y (5)
V Upstr CL MHSI PP1	30KAA12AA006	31UJH01001	M	H	ES SI	S	C/NM	Y (3)	Y (5)
V Dnstr CL MHSI PP1	30KAA12AA009	31UJH01001	M	H	ES SI	S	C/NM	Y (3)	Y (5)
V Dnstr JNG10 AC001	30KAA12AA011	31UJH05026	M	H	ES SI	S	C/NM	Y (3)	Y (5)
Ck-V Dnstr LHSI HX 1	30KAA12AA012	31UJH05026	M	H	ES SI	S	C/NM	Y (3)	Y (5)
FAJ-V CL MHSI PP1	30KAA12AA115	31UJH01001	M	H	ES SI	S	C/NM	Y (3)	Y (5)
RL-V MHSI PP1 Mtr Clr	30KAA12AA191	31UJH01002	M	H	ES SI	S	C/NM	Y (3)	Y (5)
RL-V LHSI HX 1	30KAA12AA194	31UJH05005	M	H	ES SI	S	C/NM	Y (3)	Y (5)
V F KAA12 CF066	30KAA12AA301	31UJH01001	M	H	ES SI	S	C/NM	Y (3)	Y (5)
V F KAA12 CF066	30KAA12AA302	31UJH01001	M	H	ES SI	S	C/NM	Y (3)	Y (5)
V F KAA12 CF062	30KAA12AA305	31UJH05026	M	H	ES SI	S	C/NM	Y (3)	Y (5)
V F KAA12 CF062	30KAA12AA306	31UJH05026	M	H	ES SI	S	C/NM	Y (3)	Y (5)
D-V MHSI PP10	30KAA12AA402	31UJH01001	M	H	ES SI	S	C/NM	Y (3)	Y (5)
D-V MHSI PP10	30KAA12AA404	31UJH01001	M	H	ES SI	S	C/NM	Y (3)	Y (5)
D-V LHSI HX10	30KAA12AA405	31UJH05005	M	H	ES SI	S	C/NM	Y (3)	Y (5)
V-V LHSI HX10	30KAA12AA501	31UJH05005	M	H	ES SI	S	C/NM	Y (3)	Y (5)
BP Retn LHSI HX1	30KAA12BP005	31UJH05005	M	H	ES SI	S	C/NM	Y (3)	Y (5)
F Test MHSI PP1	30KAA12CF264	31UJH01002	M	H	SI	S	C/NM	Y (3)	Y (5)
T Dnstr MHSI PP1	30KAA12CT258	31UJH01001	M	H	SI	S	C/NM	Y (3)	Y (5)
T Dnstr LHSI HX1	30KAA12CT555	31UJH05005	M	H	SI	S	C/NM	Y (3)	Y (5)

Table 3.10-1—List of Seismically and Dynamically Qualified Mechanical and Electrical Equipment (Sheet 62 of 197)

Name Tag (Equipment Description)	Tag Number	Local Area KKS ID (Room Location)	EQ Environment (Note 1)	Radiation Environment Zone (Note 2)	EQ Designated Function (Note 3)		Safety Class (Note 4)		EQ Program Designation (Note 5)	
CK-V KAA20 AC001 Outlet	30KAA20AA004	32UJH10020	M	H	ES	SI	S	C/NM	Y (3)	Y (5)
V Dnstr KAA20AC001	30KAA20AA005	32UJH10020	M	H	ES	SI	S	C/NM	Y (3)	Y (5)
QCL-V KAA20 to Com1B	30KAA20AA006	32UJH10002	M	H	ES	SI	S	C/NM	Y (3)	Y (5)
V Dnstr KAA20 AC002	30KAA20AA007	32UJH01020	M	H	ES	SI	S	C/NM	Y (3)	Y (5)
V Upstr KAA20 AC002	30KAA20AA008	32UJH01020	M	H	ES	SI	S	C/NM	Y (3)	Y (5)
QCL-V Com1B TO KAA20	30KAA20AA010	32UJH10002	M	H	ES	SI	S	C/NM	Y (3)	Y (5)
V Sur Tank to PP20	30KAA20AA011	32UJH01020	M	H	ES	SI	S	C/NM	Y (3)	Y (5)
I-V Sup Com1B	30KAA20AA013	32UJH10002	M	H	ES	SI	S	C/NM	Y (3)	Y (5)
I-V Retn Com1B	30KAA20AA014	32UJH10002	M	H	ES	SI	S	C/NM	Y (3)	Y (5)
V Upstr KAA20 AT001	30KAA20AA015	32UJH01020	M	H	ES	SI	S	C/NM	Y (3)	Y (5)
V Dnstr KAA20 AP001	30KAA20AA018	32UJH01020	M	H	ES	SI	S	C/NM	Y (3)	Y (5)
V Min Flow KAA20 AP001	30KAA20AA022	32UJH01020	M	H	ES	SI	S	C/NM	Y (3)	Y (5)
Dwds Sup Isol KAA20	30KAA20AA027	32UJH01020	M	H	ES	SI	S	C/NM	Y (3)	Y (5)
V Hydrazine Supply KAA20	30KAA20AA028	32UJH01020	M	H	ES	SI	S	C/NM	Y (3)	Y (5)
V Radn Mon to KAA20	30KAA20AA029	32UJH05020	M	H	ES	SI	S	C/NM	Y (3)	Y (5)
V KAA20 to Radn Mon	30KAA20AA030	32UJH05020	M	H	ES	SI	S	C/NM	Y (3)	Y (5)
QCL-V Com1A to KAA20	30KAA20AA032	32UJH10002	M	H	ES	SI	S	C/NM	Y (3)	Y (5)
QCL-V KAA20 To Com1A	30KAA20AA033	32UJH10002	M	H	ES	SI	S	C/NM	Y (3)	Y (5)
Tr 2 SUR Tk Lvl 2 Upper Isol	30KAA20AA034	32UJK31037	M	M	ES	SI	S	C/NM		Y (5)
Tr 2 SUR Tk Lvl 1 Upper Isol	30KAA20AA035	32UJK31036	M	M	ES	SI	S	C/NM		Y (5)
Tr 2 SUR Tk Lvl 1 Lwr Isol	30KAA20AA036	32UJK31036	M	M	ES	SI	S	C/NM		Y (5)
Tr 2 SUR Tk Lvl 2 Lwr Isol	30KAA20AA037	32UJK31037	M	M	ES	SI	S	C/NM		Y (5)
BYP-V KAA20AC001	30KAA20AA112	32UJH10020	M	H	ES	SI	S	C/NM	Y (3)	Y (5)
FAJ-V MFL KAA PP2	30KAA20AA123	32UJH01020	M	H	ES	SI	S	C/NM	Y (3)	Y (5)
FAJ-V KAA20 AC002 Ln	30KAA20AA140	32UJH01020	M	H	ES	SI	S	C/NM	Y (3)	Y (5)
RL-V CCW PP2 Mtr Clr	30KAA20AA191	32UJH01020	M	H	ES	SI	S	C/NM	Y (3)	Y (5)
V P KAA20 CP274	30KAA20AA301	32UJH01020	M	H	ES	SI	S	C/NM	Y (3)	Y (5)
V P KAA20 CP274	30KAA20AA302	32UJH01020	M	H	ES	SI	S	C/NM	Y (3)	Y (5)
V P KAA20 CP578	30KAA20AA303	32UJH01020	M	H	ES	SI	S	C/NM	Y (3)	Y (5)
V F KAA20 CF570	30KAA20AA304	32UJH01020	M	H	ES	SI	S	C/NM	Y (3)	Y (5)
V F KAA20 CF570	30KAA20AA305	32UJH01020	M	H	ES	SI	S	C/NM	Y (3)	Y (5)
V F KAA20 CF053	30KAA20AA306	32UJH01020	M	H	ES	SI	S	C/NM	Y (3)	Y (5)
V P KAA20 CP053	30KAA20AA307	32UJH01020	M	H	ES	SI	S	C/NM	Y (3)	Y (5)

Table 3.10-1—List of Seismically and Dynamically Qualified Mechanical and Electrical Equipment (Sheet 63 of 197)

Name Tag (Equipment Description)	Tag Number	Local Area KKS ID (Room Location)	EQ Environment (Note 1)	Radiation Environment Zone (Note 2)	EQ Designated Function (Note 3)		Safety Class (Note 4)		EQ Program Designation (Note 5)	
V P KAA20 CP083	30KAA20AA308	32UJH01020	M	H	ES	SI	S	C/NM	Y (3)	Y (5)
V P KAA20 CP579	30KAA20AA309	32UJH01020	M	H	ES	SI	S	C/NM	Y (3)	Y (5)
V P KAA20 CP051	30KAA20AA310	32UJH05020	M	H	ES	SI	S	C/NM	Y (3)	Y (5)
V P KAA20 CP051	30KAA20AA311	32UJH05020	M	H	ES	SI	S	C/NM	Y (3)	Y (5)
V P KAA20 CP297	30KAA20AA312	32UJH05020	M	H	ES	SI	S	C/NM	Y (3)	Y (5)
V P KAA20 CP587	30KAA20AA313	32UJH05020	M	H	ES	SI	S	C/NM	Y (3)	Y (5)
V P KAA20 CP591	30KAA20AA314	32UJH01020	M	H	ES	SI	S	C/NM	Y (3)	Y (5)
V L KAA20 CL099	30KAA20AA315	32UJK31027	M	M	ES	SI	S	C/NM		Y (5)
V L KAA20 CL099	30KAA20AA316	32UJK31027	M	M	ES	SI	S	C/NM		Y (5)
V L KAA20 CL094	30KAA20AA317	32UJK31036	M	M	ES	SI	S	C/NM		Y (5)
V L KAA20 CL094	30KAA20AA318	32UJK31036	M	M	ES	SI	S	C/NM		Y (5)
V F KAA20 CF057	30KAA20AA321	32UJH01020	M	H	ES	SI	S	C/NM	Y (3)	Y (5)
V F KAA20 CF057	30KAA20AA322	32UJH01020	M	H	ES	SI	S	C/NM	Y (3)	Y (5)
D-V SUR TK20	30KAA20AA401	32UJH01020	M	H	ES	SI	S	C/NM	Y (3)	Y (5)
D-V PP20 SUC	30KAA20AA402	32UJH01020	M	H	ES	SI	S	C/NM	Y (3)	Y (5)
D-V HX20 SHL	30KAA20AA403	32UJH10020	M	H	ES	SI	S	C/NM	Y (3)	Y (5)
D-V Rtnr PP20 Mtr Cl	30KAA20AA404	32UJH01020	M	H	ES	SI	S	C/NM	Y (3)	Y (5)
D-V Suct Strn Tm20	30KAA20AA405	32UJH01020	M	H	ES	SI	S	C/NM	Y (3)	Y (5)
D-V Min Flow PP20	30KAA20AA406	32UJH01020	M	H	ES	SI	S	C/NM	Y (3)	Y (5)
D-V SUR Tk Lvl 2 Colmn Tr 2	30KAA20AA407	32UJK31037	M	M	ES	SI	S	C/NM		Y (5)
D-V SUR Tk Lvl 1 Colmn Tr 2	30KAA20AA408	32UJK31036	M	M	ES	SI	S	C/NM		Y (5)
D-V HX20 SHL	30KAA20AA409	32UJH10020	M	H	ES	SI	S	C/NM	Y (3)	Y (5)
D-V DNSTR HX20	30KAA20AA410	32UJH05020	M	H	ES	SI	S	C/NM	Y (3)	Y (5)
D-V PP20 Disch	30KAA20AA411	32UJH01020	M	H	ES	SI	S	C/NM	Y (3)	Y (5)
D-V SUP PP20 Mtr Cl	30KAA20AA413	32UJH10020	M	H	ES	SI	S	C/NM	Y (3)	Y (5)
D-V Com1B Sup	30KAA20AA414	32UJH10002	M	H	ES	SI	S	C/NM	Y (3)	Y (5)
D-V Com1B Retn	30KAA20AA417	32UJH10002	M	H	ES	SI	S	C/NM	Y (3)	Y (5)
V-V HX20 SHL	30KAA20AA501	32UJH10020	M	H	ES	SI	S	C/NM	Y (3)	Y (5)
V-V HX20 SHL	30KAA20AA503	32UJH10020	M	H	ES	SI	S	C/NM	Y (3)	Y (5)
V-V Upstr PP20	30KAA20AA504	32UJH10020	M	H	ES	SI	S	C/NM	Y (3)	Y (5)
V-V SUR Tk Lvl 1 Colmn Tr 2	30KAA20AA505	32UJK31036	M	M	ES	SI	S	C/NM		Y (5)
V-V SUR Tk Lvl 2 Colmn Tr 2	30KAA20AA506	32UJK31037	M	M	ES	SI	S	C/NM		Y (5)
HX CCWS Tr 2	30KAA20AC001	32UJH10020	M	H	ES	SI	S	C/NM	Y (3)	Y (5)

Table 3.10-1—List of Seismically and Dynamically Qualified Mechanical and Electrical Equipment (Sheet 64 of 197)

Name Tag (Equipment Description)	Tag Number	Local Area KKS ID (Room Location)	EQ Environment (Note 1)	Radiation Environment Zone (Note 2)	EQ Designated Function (Note 3)		Safety Class (Note 4)		EQ Program Designation (Note 5)	
HX CCWS PP Mtr Clr Tr 2	30KAA20AC002	32UJH01020	M	H	ES	SI	S	C/NM	Y (3)	Y (5)
MTR HTR CCWS PP Tr 3	30KAA20AH500	32UJH01020	M	H		SII	NS-AQ			Y (5)
PP CCWS Tr 2	30KAA20AP001	32UJH01020	M	H	ES	SI	S	C/NM	Y (3)	Y (5)
STRNR CCWS PP Suction Tr 2	30KAA20AT001	32UJH01020	M	H	ES	SI	S	C/NM	Y (3)	Y (5)
SUR TK CCWS Tr 2	30KAA20BB001	32UJK31039	M	M	ES	SI	S	C/NM		Y (5)
TK TR 2 SUR Tk Lvl 2 Column	30KAA20BB301	32UJK31037	M	M	ES	SI	S	C/NM		Y (5)
TK TR 2 SUR Tk Lvl 1 Column	30KAA20BB302	32UJK31036	M	M	ES	SI	S	C/NM		Y (5)
CTR-V DW Trn20	30KAA20CF057	32UJH01020	M	H		SI	S	C/NM	Y (3)	Y (5)
F Trn20 HX Out Test Meas	30KAA20CF255	32UJH05006	M	H		SI	S	C/NM	Y (3)	Y (5)
F Retn SUR Tk20 Meas	30KAA20CF570	32UJH01020	M	H		SI	S	C/NM	Y (3)	Y (5)
L SUR Tk20 Meas	30KAA20CL598	32UJK31037	M	M		SI	S	C/NM		Y (5)
DP HX20 Meas	30KAA20CP051	32UJH05020	M	H		SI	S	C/NM	Y (3)	Y (5)
DP Suct STRN20	30KAA20CP274	32UJH01020	M	H		SI	S	C/NM	Y (3)	Y (5)
P Dnstr HX20	30KAA20CP297	32UJH10020	M	H		SI	S	C/NM	Y (3)	Y (5)
P Upstr PP20	30KAA20CP578	32UJH01020	M	H		SI	S	C/NM	Y (3)	Y (5)
P Test Dnstr PP20	30KAA20CP579	32UJH01020	M	H		SI	S	C/NM	Y (3)	Y (5)
T CW Users Trn20	30KAA20CP587	32UJH10020	M	H		SI	S	C/NM	Y (3)	Y (5)
P M CL PP20	30KAA20CP591	32UJH01020	M	H		SI	S	C/NM	Y (3)	Y (5)
T Outl HX20 Meas	30KAA20CT090	32UJH10020	M	H		SI	S	C/NM	Y (3)	Y (5)
T Inl HX20 Meas	30KAA20CT092	32UJH01020	M	H		SI	S	C/NM	Y (3)	Y (5)
T Retn CCWS PP CL2	30KAA20CT288	32UJH01020	M	H		SI	S	C/NM	Y (3)	Y (5)
V Upstr QKA20 AC002	30KAA22AA003	32UJH10002	M	H	ES	SI	S	C/NM	Y (3)	Y (5)
V Dnstr QKA20 AC002	30KAA22AA004	32UJH10002	M	H	ES	SI	S	C/NM	Y (3)	Y (5)
Isol-V JNG20 AC001	30KAA22AA005	32UJH10002	M	H	ES	SI	S	C/NM	Y (3)	Y (5)
V Upstr CL MHSI PP2	30KAA22AA006	32UJH01005	M	H	ES	SI	S	C/NM	Y (3)	Y (5)
V Upstr CL LHSI PP2	30KAA22AA007	32UJH01005	M	H	ES	SI	S	C/NM	Y (3)	Y (5)
V Dnstr CL MHSI PP2	30KAA22AA009	32UJH01005	M	H	ES	SI	S	C/NM	Y (3)	Y (5)
V Dnstr CL LHSI PP2	30KAA22AA010	32UJH01005	M	H	ES	SI	S	C/NM	Y (3)	Y (5)
V dnstr JNG20 AC001	30KAA22AA011	32UJH05020	M	H	ES	SI	S	C/NM	Y (3)	Y (5)
CK-V Dnstr LHSI HX 2	30KAA22AA012	32UJH05020	M	H	ES	SI	S	C/NM	Y (3)	Y (5)
ISOL-V SL CL LHSI PP2	30KAA22AA013	32UJH01005	M	H	ES	SI	S	C/NM	Y (3)	Y (5)
CK-V Dnstr LHSI PP 2	30KAA22AA014	32UJH01005	M	H	ES	SI	S	C/NM	Y (3)	Y (5)
3W-C-V Safe CHIL2	30KAA22AA101	32UJH05020	M	H	ES	SI	S	C/NM	Y (3)	Y (5)

Table 3.10-1—List of Seismically and Dynamically Qualified Mechanical and Electrical Equipment (Sheet 65 of 197)

Name Tag (Equipment Description)	Tag Number	Local Area KKS ID (Room Location)	EQ Environment (Note 1)	Radiation Environment Zone (Note 2)	EQ Designated Function (Note 3)		Safety Class (Note 4)		EQ Program Designation (Note 5)	
FAJ-V CL MHSI PP2	30KAA22AA115	32UJH01005	M	H	ES	SI	S	C/NM	Y (3)	Y (5)
FAJ-V CL LHSI PP2 M	30KAA22AA116	32UJH01005	M	H	ES	SI	S	C/NM	Y (3)	Y (5)
FAJ-V SL CL LHSI PP2	30KAA22AA127	32UJH01005	M	H	ES	SI	S	C/NM	Y (3)	Y (5)
RL-V LHSI HX 2	30KAA22AA191	32UJH05006	M	H	ES	SI	S	C/NM	Y (3)	Y (5)
RL-V LHSIS PP2 Seal Clr	30KAA22AA192	32UJH01006	M	H	ES	SI	S	C/NM	Y (3)	Y (5)
RL-V LHSIS PP2 Mtr Clr	30KAA22AA193	32UJH01006	M	H	ES	SI	S	C/NM	Y (3)	Y (5)
RL-V MHSI PP2 Mtr Clr	30KAA22AA194	32UJH01007	M	H	ES	SI	S	C/NM	Y (3)	Y (5)
RL-V SCWS Tr2	30KAA22AA195	32UJH10020	M	H	ES	SI	S	C/NM	Y (3)	Y (5)
V F KAA22CF066	30KAA22AA301	32UJH01005	M	H	ES	SI	S	C/NM	Y (3)	Y (5)
V F KAA22CF066	30KAA22AA302	32UJH01005	M	H	ES	SI	S	C/NM	Y (3)	Y (5)
V F KAA22CF080	30KAA22AA303	32UJH01005	M	H	ES	SI	S	C/NM	Y (3)	Y (5)
V F KAA22CF080	30KAA22AA304	32UJH01005	M	H	ES	SI	S	C/NM	Y (3)	Y (5)
V F KAA22CF062	30KAA22AA305	32UJH01020	M	H	ES	SI	S	C/NM	Y (3)	Y (5)
V F KAA22CF062	30KAA22AA306	32UJH01020	M	H	ES	SI	S	C/NM	Y (3)	Y (5)
V F KAA22CF068	30KAA22AA307	32UJH05020	M	H	ES	SI	S	C/NM	Y (3)	Y (5)
V F KAA22CF068	30KAA22AA308	32UJH05020	M	H	ES	SI	S	C/NM	Y (3)	Y (5)
V P KAA22CP503	30KAA22AA309	32UJH05020	M	H	ES	SI	S	C/NM	Y (3)	Y (5)
V P KAA22CP501	30KAA22AA310	32UJH05020	M	H	ES	SI	S	C/NM	Y (3)	Y (5)
V P KAA22CP502	30KAA22AA313	32UJH05020	M	H	ES	SI	S	C/NM	Y (3)	Y (5)
D-V MHSI HX20	30KAA22AA401	32UJH01005	M	H	ES	SI	S	C/NM	Y (3)	Y (5)
D-V MHSI HX20	30KAA22AA402	32UJH01005	M	H	ES	SI	S	C/NM	Y (3)	Y (5)
D-V JNG PP2 M CL	30KAA22AA403	32UJH01005	M	H	ES	SI	S	C/NM	Y (3)	Y (5)
D-V Byp QKA20	30KAA22AA404	32UJH01020	M	H	ES	SI	S	C/NM	Y (3)	Y (5)
D-V LHSI HX20	30KAA22AA405	32UJH05020	M	H	ES	SI	S	C/NM	Y (3)	Y (5)
V-V LHSI HX20	30KAA22AA501	32UJH10002	M	H	ES	SI	S	C/NM	Y (3)	Y (5)
V-V LHSI HX20	30KAA22AA502	32UJH05020	M	H	ES	SI	S	C/NM	Y (3)	Y (5)
BP Retn LHSI HX2	30KAA22BP005	32UJH05006	M	H	ES	SI	S	C/NM	Y (3)	Y (5)
BP Retn MHSI PP2	30KAA22BP006	32UJH05020	M	H	ES	SI	S	C/NM	Y (3)	Y (5)
F Test MHSI PP2	30KAA22CF264	32UJH01005	M	H		SI	S	C/NM	Y (3)	Y (5)
F Lhsi TEST PP2	30KAA22CF282	32UJH01005	M	H		SI	S	C/NM	Y (3)	Y (5)
P Dnstr SAFE CHIL2	30KAA22CP501	32UJH05020	M	H		SI	S	C/NM	Y (3)	Y (5)
P Dnstr *22 AA101*	30KAA22CP502	32UJH05020	M	H		SI	S	C/NM	Y (3)	Y (5)
P Upstr SAFE CHIL2	30KAA22CP503	32UJH05020	M	H		SI	S	C/NM	Y (3)	Y (5)

Table 3.10-1—List of Seismically and Dynamically Qualified Mechanical and Electrical Equipment (Sheet 66 of 197)

Name Tag (Equipment Description)	Tag Number	Local Area KKS ID (Room Location)	EQ Environment (Note 1)	Radiation Environment Zone (Note 2)	EQ Designated Function (Note 3)		Safety Class (Note 4)		EQ Program Designation (Note 5)	
T Dnstr MHSI PP2	30KAA22CT258	32UJH01005	M	H		SI	S	C/NM	Y (3)	Y (5)
T Dnstr LHSI PP2	30KAA22CT284	32UJH01005	M	H		SI	S	C/NM	Y (3)	Y (5)
T Dnstr Safe Chil2	30KAA22CT553	32UJH05020	M	H		SI	S	C/NM	Y (3)	Y (5)
T DNSTR LHSI HX2	30KAA22CT555	32UJH05006	M	H		SI	S	C/NM	Y (3)	Y (5)
CK-V KAA30 AC001 Outlet	30KAA30AA004	33UJH10020	M	H	ES	SI	S	C/NM	Y (3)	Y (5)
V Dnstr KAA30AC001	30KAA30AA005	33UJH10020	M	H	ES	SI	S	C/NM	Y (3)	Y (5)
QCL-V KAA30 TO Com2B	30KAA30AA006	33UJH10002	M	H	ES	SI	S	C/NM	Y (3)	Y (5)
V Dnstr KAA30 AC002	30KAA30AA007	33UJH01020	M	H	ES	SI	S	C/NM	Y (3)	Y (5)
V Upstr KAA30 AC002	30KAA30AA008	33UJH01020	M	H	ES	SI	S	C/NM	Y (3)	Y (5)
QCL-V Com2B TO KAA30	30KAA30AA010	33UJH10002	M	H	ES	SI	S	C/NM	Y (3)	Y (5)
V SUR Tank to PP30	30KAA30AA011	33UJH01020	M	H	ES	SI	S	C/NM	Y (3)	Y (5)
I-V Sup Com1B	30KAA30AA013	33UJH10002	M	H	ES	SI	S	C/NM	Y (3)	Y (5)
I-V Retn Com1B	30KAA30AA014	33UJH10002	M	H	ES	SI	S	C/NM	Y (3)	Y (5)
V Upstr KAA30 AT001	30KAA30AA015	33UJH01020	M	H	ES	SI	S	C/NM	Y (3)	Y (5)
V Dnstr KAA30 AP001	30KAA30AA018	33UJH01020	M	H	ES	SI	S	C/NM	Y (3)	Y (5)
V Min Flow KAA30 AP001	30KAA30AA022	33UJH01020	M	H	ES	SI	S	C/NM	Y (3)	Y (5)
DWds Sup Isol KAA30	30KAA30AA027	33UJH01020	M	H	ES	SI	S	C/NM	Y (3)	Y (5)
V Hydrazine Supply KAA30	30KAA30AA028	33UJH01020	M	H	ES	SI	S	C/NM	Y (3)	Y (5)
V Radn Mon to KAA30	30KAA30AA029	33UJH05020	M	H	ES	SI	S	C/NM	Y (3)	Y (5)
V KAA30 to Radn Mon	30KAA30AA030	33UJH05020	M	H	ES	SI	S	C/NM	Y (3)	Y (5)
QCL-V Com2A to KAA30	30KAA30AA032	33UJH10002	M	H	ES	SI	S	C/NM	Y (3)	Y (5)
QCL-V KAA30 to Com2A	30KAA30AA033	33UJH10002	M	H	ES	SI	S	C/NM	Y (3)	Y (5)
Tr 3 SUR Tk Lvl 2 Upper Isol	30KAA30AA034	33UJK31037	M	M	ES	SI	S	C/NM		Y (5)
Tr 3 SUR Tk Lvl 1 Upper Isol	30KAA30AA035	33UJK31036	M	M	ES	SI	S	C/NM		Y (5)
Tr 3 SUR Tk Lvl 1 Lwr Isol	30KAA30AA036	33UJK31036	M	M	ES	SI	S	C/NM		Y (5)
Tr 3 SUR Tk Lvl 2 Lwr Isol	30KAA30AA037	33UJK31037	M	M	ES	SI	S	C/NM		Y (5)
BYP-V KAA30AC001	30KAA30AA112	33UJH10020	M	H	ES	SI	S	C/NM	Y (3)	Y (5)
FAJ-V MFL KAA PP3	30KAA30AA123	33UJH01020	M	H	ES	SI	S	C/NM	Y (3)	Y (5)
FAJ-V KAA30 AC002 Ln	30KAA30AA140	33UJH01020	M	H	ES	SI	S	C/NM	Y (3)	Y (5)
RL-V CCW PP3 Mtr Clr	30KAA30AA191	33UJH01020	M	H	ES	SI	S	C/NM	Y (3)	Y (5)
V P KAA30 CP274	30KAA30AA301	33UJH01020	M	H	ES	SI	S	C/NM	Y (3)	Y (5)
V P KAA30 CP274	30KAA30AA302	33UJH01020	M	H	ES	SI	S	C/NM	Y (3)	Y (5)
V P KAA30 CP578	30KAA30AA303	33UJH01020	M	H	ES	SI	S	C/NM	Y (3)	Y (5)

Table 3.10-1—List of Seismically and Dynamically Qualified Mechanical and Electrical Equipment (Sheet 67 of 197)

Name Tag (Equipment Description)	Tag Number	Local Area KKS ID (Room Location)	EQ Environment (Note 1)	Radiation Environment Zone (Note 2)	EQ Designated Function (Note 3)		Safety Class (Note 4)		EQ Program Designation (Note 5)	
V F KAA30 CF570	30KAA30AA304	33UJH01020	M	H	ES	SI	S	C/NM	Y (3)	Y (5)
V F KAA30 CF570	30KAA30AA305	33UJH01020	M	H	ES	SI	S	C/NM	Y (3)	Y (5)
V F KAA30 CF053	30KAA30AA306	33UJH01020	M	H	ES	SI	S	C/NM	Y (3)	Y (5)
V P KAA30 CP053	30KAA30AA307	33UJH01020	M	H	ES	SI	S	C/NM	Y (3)	Y (5)
V P KAA30 CP083	30KAA30AA308	33UJH01020	M	H	ES	SI	S	C/NM	Y (3)	Y (5)
V P KAA30 CP579	30KAA30AA309	33UJH01020	M	H	ES	SI	S	C/NM	Y (3)	Y (5)
V P KAA30 CP051	30KAA30AA310	33UJH05020	M	H	ES	SI	S	C/NM	Y (3)	Y (5)
V P KAA30 CP051	30KAA30AA311	33UJH05020	M	H	ES	SI	S	C/NM	Y (3)	Y (5)
V P KAA30 CP297	30KAA30AA312	33UJH05020	M	H	ES	SI	S	C/NM	Y (3)	Y (5)
V P KAA30 CP587	30KAA30AA313	33UJH05020	M	H	ES	SI	S	C/NM	Y (3)	Y (5)
V P KAA30 CP591	30KAA30AA314	33UJH01020	M	H	ES	SI	S	C/NM	Y (3)	Y (5)
V L KAA30 CL099	30KAA30AA315	33UJK31027	M	M	ES	SI	S	C/NM		Y (5)
V L KAA30 CL099	30KAA30AA316	33UJK31027	M	M	ES	SI	S	C/NM		Y (5)
V L KAA30 CL094	30KAA30AA317	33UJK31036	M	M	ES	SI	S	C/NM		Y (5)
V L KAA30 CL094	30KAA30AA318	33UJK31036	M	M	ES	SI	S	C/NM		Y (5)
I-V Upr KAA30 CF240	30KAA30AA319	33UJH01020	M	H	ES	SI	S	C/NM	Y (3)	Y (5)
I-V Dwr KAA30 CF240	30KAA30AA320	33UJH01020	M	H	ES	SI	S	C/NM	Y (3)	Y (5)
V F KAA30 CF057	30KAA30AA321	33UJH01020	M	H	ES	SI	S	C/NM	Y (3)	Y (5)
V F KAA30 CF057	30KAA30AA322	33UJH01020	M	H	ES	SI	S	C/NM	Y (3)	Y (5)
D-V SUR Tk30	30KAA30AA401	33UJH01020	M	H	ES	SI	S	C/NM	Y (3)	Y (5)
D-V PP30 Suc	30KAA30AA402	33UJH01020	M	H	ES	SI	S	C/NM	Y (3)	Y (5)
D-V HX30 Shl	30KAA30AA403	33UJH10020	M	H	ES	SI	S	C/NM	Y (3)	Y (5)
D-V Rtnr PP30 Mtr Cl	30KAA30AA404	33UJH01020	M	H	ES	SI	S	C/NM	Y (3)	Y (5)
D-V Suct Strn Tm30	30KAA30AA405	32UJH05020	M	H	ES	SI	S	C/NM	Y (3)	Y (5)
D-V Min Flow PP30	30KAA30AA406	33UJH01020	M	H	ES	SI	S	C/NM	Y (3)	Y (5)
D-V SUR Tk Lvl 2 Colmn Tr 3	30KAA30AA407	33UJK31037	M	M	ES	SI	S	C/NM		Y (5)
D-V SUR TK Lvl 1 Colmn Tr 3	30KAA30AA408	33UJK31036	M	M	ES	SI	S	C/NM		Y (5)
D-V HX30 Shl	30KAA30AA409	33UJH10020	M	H	ES	SI	S	C/NM	Y (3)	Y (5)
D-V Dnstr HX30	30KAA30AA410	33UJH05020	M	H	ES	SI	S	C/NM	Y (3)	Y (5)
D-V PP30 Disch	30KAA30AA411	33UJH01020	M	H	ES	SI	S	C/NM	Y (3)	Y (5)
D-V Sup PP30 Mtr Cl	30KAA30AA413	33UJH10020	M	H	ES	SI	S	C/NM	Y (3)	Y (5)
D-V Com1B Sup	30KAA30AA414	33UJH10002	M	H	ES	SI	S	C/NM	Y (3)	Y (5)
D-V Com1B Retn	30KAA30AA417	33UJH10002	M	H	ES	SI	S	C/NM	Y (3)	Y (5)

Table 3.10-1—List of Seismically and Dynamically Qualified Mechanical and Electrical Equipment (Sheet 68 of 197)

Name Tag (Equipment Description)	Tag Number	Local Area KKS ID (Room Location)	EQ Environment (Note 1)	Radiation Environment Zone (Note 2)	EQ Designated Function (Note 3)		Safety Class (Note 4)		EQ Program Designation (Note 5)	
V-V HX30 Shl	30KAA30AA501	33UJH10020	M	H	ES	SI	S	C/NM	Y (3)	Y (5)
V-V HX30 Shl	30KAA30AA503	33UJH10020	M	H	ES	SI	S	C/NM	Y (3)	Y (5)
V-V Upstr PP20	30KAA30AA504	33UJH10020	M	H	ES	SI	S	C/NM	Y (3)	Y (5)
V-V SUR Tk Lvl 1 Colmn Tr 3	30KAA30AA505	33UJK31036	M	M	ES	SI	S	C/NM		Y (5)
V-V SUR Tk Lvl 2 Colmn Tr 3	30KAA30AA506	33UJK31037	M	M	ES	SI	S	C/NM		Y (5)
HX CCWS Tr 3	30KAA30AC001	33UJH10020	M	H	ES	SI	S	C/NM	Y (3)	Y (5)
HX CCWS PP Mtr Clr Tr 3	30KAA30AC002	33UJH01020	M	H	ES	SI	S	C/NM	Y (3)	Y (5)
MTR HTR CCWS PP Tr 2	30KAA30AH500	33UJH01020	M	H		SII	NS-AQ			Y (5)
PP CCWS Tr 3	30KAA30AP001	33UJH01020	M	H	ES	SI	S	C/NM	Y (3)	Y (5)
Strnr CCWS PP Suction Tr 3	30KAA30AT001	33UJH01020	M	H	ES	SI	S	C/NM	Y (3)	Y (5)
SUR Tk CCWS Tr 3	30KAA30BB001	33UJK31039	M	M	ES	SI	S	C/NM		Y (5)
Tk Tr 3 SUR Tk Lvl 2 Column	30KAA30BB301	33UJK31037	M	M	ES	SI	S	C/NM		Y (5)
TK Tr 3 SUR Tk Lvl 1 Column	30KAA30BB302	33UJK31036	M	M	ES	SI	S	C/NM		Y (5)
CTR-V Dw Trn30	30KAA30CF057	33UJH01020	M	H		SI	S	C/NM	Y (3)	Y (5)
F Trn30 HX OUT Test Meas	30KAA30CF255	33UJH05006	M	H		SI	S	C/NM	Y (3)	Y (5)
F Retn SUR Tk30 Meas	30KAA30CF570	33UJH01020	M	H		SI	S	C/NM	Y (3)	Y (5)
L SUR Tk30 Meas	30KAA30CL598	33UJK31037	M	M		SI	S	C/NM		Y (5)
DP HX30 Meas	30KAA30CP051	33UJH05020	M	H		SI	S	C/NM	Y (3)	Y (5)
DP Suct Strn30	30KAA30CP274	33UJH10020	M	H		SI	S	C/NM	Y (3)	Y (5)
P Dnstr HX30	30KAA30CP297	33UJH10020	M	H		SI	S	C/NM	Y (3)	Y (5)
P Upstr PP30	30KAA30CP578	33UJH01020	M	H		SI	S	C/NM	Y (3)	Y (5)
P Test Dnstr PP30	30KAA30CP579	33UJH01020	M	H		SI	S	C/NM	Y (3)	Y (5)
T CW Users Trn30	30KAA30CP587	33UJH10020	M	H		SI	S	C/NM	Y (3)	Y (5)
P M Cl PP30	30KAA30CP591	33UJH01020	M	H		SI	S	C/NM	Y (3)	Y (5)
T Outl HX30 Meas	30KAA30CT090	33UJH10020	M	H		SI	S	C/NM	Y (3)	Y (5)
T Inl HX30 Meas	30KAA30CT092	33UJH01020	M	H		SI	S	C/NM	Y (3)	Y (5)
T Retn CCWS PP Cl3	30KAA30CT288	33UJH01020	M	H		SI	S	C/NM	Y (3)	Y (5)
V Upstr QKA30 AC002	30KAA32AA003	33UJH10002	M	H	ES	SI	S	C/NM	Y (3)	Y (5)
V Dnstr QKA30 AC002	30KAA32AA004	33UJH10002	M	H	ES	SI	S	C/NM	Y (3)	Y (5)
Isol-V Jng30 AC001	30KAA32AA005	33UJH10002	M	H	ES	SI	S	C/NM	Y (3)	Y (5)
V Upstr Cl MHSI PP3	30KAA32AA006	33UJH01005	M	H	ES	SI	S	C/NM	Y (3)	Y (5)
V Upstr Cl LHSI PP3	30KAA32AA007	33UJH01005	M	H	ES	SI	S	C/NM	Y (3)	Y (5)
V Dnstr Cl MHSI PP3	30KAA32AA009	33UJH01005	M	H	ES	SI	S	C/NM	Y (3)	Y (5)

Table 3.10-1—List of Seismically and Dynamically Qualified Mechanical and Electrical Equipment (Sheet 69 of 197)

Name Tag (Equipment Description)	Tag Number	Local Area KKS ID (Room Location)	EQ Environment (Note 1)	Radiation Environment Zone (Note 2)	EQ Designated Function (Note 3)		Safety Class (Note 4)		EQ Program Designation (Note 5)	
V Dnstr Cl LHSI PP3	30KAA32AA010	33UJH01005	M	H	ES	SI	S	C/NM	Y (3)	Y (5)
V Dnstr Jng30 AC001	30KAA32AA011	33UJH05020	M	H	ES	SI	S	C/NM	Y (3)	Y (5)
Ck-V Dnstr LHSI HX 3	30KAA32AA012	33UJH05020	M	H	ES	SI	S	C/NM	Y (3)	Y (5)
Isol-V SI Cl LHSI PP3	30KAA32AA013	33UJH10002	M	H	ES	SI	S	C/NM	Y (3)	Y (5)
Ck-V Dnstr LHSI PP 3	30KAA32AA014	33UJH01005	M	H	ES	SI	S	C/NM	Y (3)	Y (5)
3W-C-V Safe Chil3	30KAA32AA101	33UJH05038	M	H	ES	SI	S	C/NM	Y (3)	Y (5)
FAJ-V Cl MHSI PP3	30KAA32AA115	33UJH01005	M	H	ES	SI	S	C/NM	Y (3)	Y (5)
FAJ-V Cl LHSI PP3 M	30KAA32AA116	33UJH01005	M	H	ES	SI	S	C/NM	Y (3)	Y (5)
FAJ-V SL Cl LHSI PP3	30KAA32AA127	33UJH01005	M	H	ES	SI	S	C/NM	Y (3)	Y (5)
RL-V LHSI HX 3	30KAA32AA191	33UJH05006	M	H	ES	SI	S	C/NM	Y (3)	Y (5)
RL-V LHSIS PP3 Seal Clr	30KAA32AA192	33UJH01009	M	H	ES	SI	S	C/NM	Y (3)	Y (5)
RL-V LHSIS PP3 Mtr Clr	30KAA32AA193	33UJH01009	M	H	ES	SI	S	C/NM	Y (3)	Y (5)
RL-V MHSI PP3 Mtr Clr	30KAA32AA194	33UJH01007	M	H	ES	SI	S	C/NM	Y (3)	Y (5)
RL-V SCWS TR3	30KAA32AA195	33UJH10020	M	H	ES	SI	S	C/NM	Y (3)	Y (5)
V F KAA32 CF066	30KAA32AA301	33UJH01005	M	H	ES	SI	S	C/NM	Y (3)	Y (5)
V F KAA32 CF066	30KAA32AA302	33UJH01005	M	H	ES	SI	S	C/NM	Y (3)	Y (5)
V F KAA32 CF080	30KAA32AA303	33UJH01005	M	H	ES	SI	S	C/NM	Y (3)	Y (5)
V F KAA32 CF080	30KAA32AA304	33UJH01005	M	H	ES	SI	S	C/NM	Y (3)	Y (5)
V F KAA32 CF062	30KAA32AA305	33UJH01020	M	H	ES	SI	S	C/NM	Y (3)	Y (5)
V F KAA32 CF062	30KAA32AA306	33UJH01020	M	H	ES	SI	S	C/NM	Y (3)	Y (5)
V F KAA32 CF068	30KAA32AA307	33UJH05020	M	H	ES	SI	S	C/NM	Y (3)	Y (5)
V F KAA32 CF068	30KAA32AA308	33UJH05020	M	H	ES	SI	S	C/NM	Y (3)	Y (5)
V P KAA32 CP503	30KAA32AA309	33UJH05020	M	H	ES	SI	S	C/NM	Y (3)	Y (5)
V P KAA32 CP501	30KAA32AA310	33UJH05020	M	H	ES	SI	S	C/NM	Y (3)	Y (5)
V P KAA32 CP502	30KAA32AA313	33UJH05020	M	H	ES	SI	S	C/NM	Y (3)	Y (5)
D-V MHSI HX30	30KAA32AA401	33UJH01005	M	H	ES	SI	S	C/NM	Y (3)	Y (5)
D-V MHSI HX30	30KAA32AA402	33UJH01005	M	H	ES	SI	S	C/NM	Y (3)	Y (5)
D-V Jng PP3 M Cl	30KAA32AA403	33UJH01005	M	H	ES	SI	S	C/NM	Y (3)	Y (5)
D-V Byp QKA30	30KAA32AA404	33UJH01020	M	H	ES	SI	S	C/NM	Y (3)	Y (5)
D-V LHSI HX30	30KAA32AA405	33UJH05020	M	H	ES	SI	S	C/NM	Y (3)	Y (5)
V-V LHSI HX30	30KAA32AA501	33UJH10002	M	H	ES	SI	S	C/NM	Y (3)	Y (5)
V-V LHSI HX30	30KAA32AA502	33UJH05020	M	H	ES	SI	S	C/NM	Y (3)	Y (5)
BP Retn LHSI HX3	30KAA32BP005	33UJH05006	M	H	ES	SI	S	C/NM	Y (3)	Y (5)

Table 3.10-1—List of Seismically and Dynamically Qualified Mechanical and Electrical Equipment (Sheet 70 of 197)

Name Tag (Equipment Description)	Tag Number	Local Area KKS ID (Room Location)	EQ Environment (Note 1)	Radiation Environment Zone (Note 2)	EQ Designated Function (Note 3)		Safety Class (Note 4)		EQ Program Designation (Note 5)	
BP Retn MHSI PP3	30KAA32BP006	33UJH05020	M	H	ES	SI	S	C/NM	Y (3)	Y (5)
F Test MHSI PP3	30KAA32CF264	33UJH01005	M	H		SI	S	C/NM	Y (3)	Y (5)
F LHSI Test PP3	30KAA32CF282	33UJH01005	M	H		SI	S	C/NM	Y (3)	Y (5)
P Dnstr Safe Chil3	30KAA32CP501	33UJH05020	M	H		SI	S	C/NM	Y (3)	Y (5)
P Dnstr *32 AA101*	30KAA32CP502	33UJH05020	M	H		SI	S	C/NM	Y (3)	Y (5)
P Upstr Safe Chil3	30KAA32CP503	33UJH05020	M	H		SI	S	C/NM	Y (3)	Y (5)
T Dnstr MHSI PP3	30KAA32CT258	33UJH01005	M	H		SI	S	C/NM	Y (3)	Y (5)
T Dnstr LHSI PP3	30KAA32CT284	33UJH01005	M	H		SI	S	C/NM	Y (3)	Y (5)
T Dnstr Safe Chil3	30KAA32CT553	33UJH05020	M	H		SI	S	C/NM	Y (3)	Y (5)
T Dnstr LHSI HX3	30KAA32CT555	33UJH05006	M	H		SI	S	C/NM	Y (3)	Y (5)
Ck-V KAA40 AC001 Outlet	30KAA40AA004	34UJH10026	M	H	ES	SI	S	C/NM	Y (3)	Y (5)
V Dnstr KAA40AC001	30KAA40AA005	34UJH10026	M	H	ES	SI	S	C/NM	Y (3)	Y (5)
QCL-V KAA40 TO Com2B	30KAA40AA006	34UJH10004	M	H	ES	SI	S	C/NM	Y (3)	Y (5)
V Dnstr KAA40 AC002	30KAA40AA007	34UJH01026	M	H	ES	SI	S	C/NM	Y (3)	Y (5)
V Upstr KAA40 AC002	30KAA40AA008	34UJH01026	M	H	ES	SI	S	C/NM	Y (3)	Y (5)
Qcl-V Com2B TO KAA40	30KAA40AA010	34UJH10004	M	H	ES	SI	S	C/NM	Y (3)	Y (5)
V SUR Tank to PP40	30KAA40AA011	34UJH01026	M	H	ES	SI	S	C/NM	Y (3)	Y (5)
V Upstr KAA40 AT001	30KAA40AA015	34UJH01026	M	H	ES	SI	S	C/NM	Y (3)	Y (5)
V Dnstr KAA40 AP001	30KAA40AA018	34UJH01026	M	H	ES	SI	S	C/NM	Y (3)	Y (5)
V Min Flow KAA40 AP001	30KAA40AA022	34UJH01026	M	H	ES	SI	S	C/NM	Y (3)	Y (5)
Dwds Sup Isol KAA40	30KAA40AA027	34UJH01024	M	H	ES	SI	S	C/NM	Y (3)	Y (5)
V Hydrazine Supply KAA40	30KAA40AA028	34UJH01024	M	H	ES	SI	S	C/NM	Y (3)	Y (5)
V Radn Mon to KAA40	30KAA40AA029	34UJH05026	M	H	ES	SI	S	C/NM	Y (3)	Y (5)
V KAA40 to RAdn Mon	30KAA40AA030	34UJH05026	M	H	ES	SI	S	C/NM	Y (3)	Y (5)
QCL-V Com2A to KAA40	30KAA40AA032	34UJH10004	M	H	ES	SI	S	C/NM	Y (3)	Y (5)
QCL-V KAA40 to Com2A	30KAA40AA033	34UJH10004	M	H	ES	SI	S	C/NM	Y (3)	Y (5)
Tr 4 SUR Tk Lvl 2 Upper Isol	30KAA40AA034	34UJK31027	M	M	ES	SI	S	C/NM		Y (5)
Tr 4 SUR Tk Lvl 1 Upper Isol	30KAA40AA035	34UJK31026	M	M	ES	SI	S	C/NM		Y (5)
Tr 4 SUR Tk Lvl 1 Lwr Isol	30KAA40AA036	34UJK31026	M	M	ES	SI	S	C/NM		Y (5)
Tr 4 SUR Tk Lvl 2 Lwr Isol	30KAA40AA037	34UJK31027	M	M	ES	SI	S	C/NM		Y (5)
Byp-V KAA40AC001	30KAA40AA112	34UJH10026	M	H	ES	SI	S	C/NM	Y (3)	Y (5)
FAJ-V MFL KAA PP4	30KAA40AA123	34UJH01026	M	H	ES	SI	S	C/NM	Y (3)	Y (5)
FAJ-V KAA40 AC002 Ln	30KAA40AA140	34UJH01026	M	H	ES	SI	S	C/NM	Y (3)	Y (5)

Table 3.10-1—List of Seismically and Dynamically Qualified Mechanical and Electrical Equipment (Sheet 71 of 197)

Name Tag (Equipment Description)	Tag Number	Local Area KKS ID (Room Location)	EQ Environment (Note 1)	Radiation Environment Zone (Note 2)	EQ Designated Function (Note 3)		Safety Class (Note 4)		EQ Program Designation (Note 5)	
RL-V CCW PP4 Mtr Clr	30KAA40AA191	34UJH01026	M	H	ES	SI	S	C/NM	Y (3)	Y (5)
V P KAA40 CP274	30KAA40AA301	34UJH01026	M	H	ES	SI	S	C/NM	Y (3)	Y (5)
V P KAA40 CP274	30KAA40AA302	34UJH01026	M	H	ES	SI	S	C/NM	Y (3)	Y (5)
V P KAA40 CP578	30KAA40AA303	34UJH01026	M	H	ES	SI	S	C/NM	Y (3)	Y (5)
V F KAA40 CF570	30KAA40AA304	34UJH01026	M	H	ES	SI	S	C/NM	Y (3)	Y (5)
V F KAA40 CF570	30KAA40AA305	34UJH01026	M	H	ES	SI	S	C/NM	Y (3)	Y (5)
V F KAA40 CF053	30KAA40AA306	34UJH10026	M	H	ES	SI	S	C/NM	Y (3)	Y (5)
V P KAA40 CP053	30KAA40AA307	34UJH10026	M	H	ES	SI	S	C/NM	Y (3)	Y (5)
V P KAA40 CP083	30KAA40AA308	34UJH01026	M	H	ES	SI	S	C/NM	Y (3)	Y (5)
V P KAA40 CP579	30KAA40AA309	34UJH01026	M	H	ES	SI	S	C/NM	Y (3)	Y (5)
V P KAA40 CP051	30KAA40AA310	34UJH10026	M	H	ES	SI	S	C/NM	Y (3)	Y (5)
V P KAA40 CP051	30KAA40AA311	34UJH10026	M	H	ES	SI	S	C/NM	Y (3)	Y (5)
V P KAA40 CP297	30KAA40AA312	34UJH10026	M	H	ES	SI	S	C/NM	Y (3)	Y (5)
V P KAA40 CP587	30KAA40AA313	34UJH10026	M	H	ES	SI	S	C/NM	Y (3)	Y (5)
V P KAA40 CP591	30KAA40AA314	34UJH01026	M	H	ES	SI	S	C/NM	Y (3)	Y (5)
V L KAA40 CL099	30KAA40AA315	34UJK31027	M	M	ES	SI	S	C/NM		Y (5)
V L KAA40 CL099	30KAA40AA316	34UJK31027	M	M	ES	SI	S	C/NM		Y (5)
V L KAA40 CL094	30KAA40AA317	34UJK31026	M	M	ES	SI	S	C/NM		Y (5)
V L KAA40 CL094	30KAA40AA318	34UJK31026	M	M	ES	SI	S	C/NM		Y (5)
I-V Upr KAA40 CF240	30KAA40AA319	34UJH01026	M	H	ES	SI	S	C/NM	Y (3)	Y (5)
I-V Dwr KAA40 CF240	30KAA40AA320	34UJH01026	M	H	ES	SI	S	C/NM	Y (3)	Y (5)
V F KAA40 CF057	30KAA40AA321	34UJH01024	M	H	ES	SI	S	C/NM	Y (3)	Y (5)
V F KAA40 CF057	30KAA40AA322	34UJH01024	M	H	ES	SI	S	C/NM	Y (3)	Y (5)
D-V SUR TK40	30KAA40AA401	34UJH01026	M	H	ES	SI	S	C/NM	Y (3)	Y (5)
D-V PP40 Suc	30KAA40AA402	34UJH01026	M	H	ES	SI	S	C/NM	Y (3)	Y (5)
D-V HX40 Shl	30KAA40AA403	34UJH10026	M	H	ES	SI	S	C/NM	Y (3)	Y (5)
D-V Rtnr PP40 Mtr Cl	30KAA40AA404	34UJH01026	M	H	ES	SI	S	C/NM	Y (3)	Y (5)
D-V Suct Strn Tm40	30KAA40AA405	34UJH01026	M	H	ES	SI	S	C/NM	Y (3)	Y (5)
D-V Min Flow PP40	30KAA40AA406	34UJH01026	M	H	ES	SI	S	C/NM	Y (3)	Y (5)
D-V SUR Tk Lvl 2 Colmn Tr 4	30KAA40AA407	34UJK31027	M	M	ES	SI	S	C/NM		Y (5)
D-V SUR Tk Lvl 1 Colmn Tr 4	30KAA40AA408	34UJK31026	M	M	ES	SI	S	C/NM		Y (5)
D-V HX30 Shl	30KAA40AA409	34UJH10026	M	H	ES	SI	S	C/NM	Y (3)	Y (5)
D-V Dnstr HX40	30KAA40AA410	34UJH10026	M	H	ES	SI	S	C/NM	Y (3)	Y (5)

Table 3.10-1—List of Seismically and Dynamically Qualified Mechanical and Electrical Equipment (Sheet 72 of 197)

Name Tag (Equipment Description)	Tag Number	Local Area KKS ID (Room Location)	EQ Environment (Note 1)	Radiation Environment Zone (Note 2)	EQ Designated Function (Note 3)		Safety Class (Note 4)		EQ Program Designation (Note 5)	
D-V PP40 Disch	30KAA40AA411	34UJH01026	M	H	ES	SI	S	C/NM	Y (3)	Y (5)
D-V Sup PP40 Mtr Cl	30KAA40AA413	34UJH10026	M	H	ES	SI	S	C/NM	Y (3)	Y (5)
V-V HX40 Shl	30KAA40AA501	34UJH10026	M	H	ES	SI	S	C/NM	Y (3)	Y (5)
V-V HX40 Shl	30KAA40AA503	34UJH10004	M	H	ES	SI	S	C/NM	Y (3)	Y (5)
V-V Upstr PP40	30KAA40AA504	34UJH10026	M	H	ES	SI	S	C/NM	Y (3)	Y (5)
V-V SUR Tk Lvl 1 Colmn Tr 4	30KAA40AA505	34UJK31026	M	M	ES	SI	S	C/NM		Y (5)
V-V SUR Tk Lvl 2 Colmn Tr 4	30KAA40AA506	34UJK31027	M	M	ES	SI	S	C/NM		Y (5)
HX CCWS Tr 4	30KAA40AC001	34UJH10026	M	H	ES	SI	S	C/NM	Y (3)	Y (5)
HX CCWS PP Mtr Clr Tr 4	30KAA40AC002	34UJH01026	M	H	ES	SI	S	C/NM	Y (3)	Y (5)
MTR HTR CCWS PP Tr 4	30KAA40AH500	34UJH01026	M	H		SII	NS-AQ			Y (5)
PP CCWS Tr 4	30KAA40AP001	34UJH01026	M	H	ES	SI	S	C/NM	Y (3)	Y (5)
STRNR CCWS PP Suction Tr 4	30KAA40AT001	34UJH01026	M	H	ES	SI	S	C/NM	Y (3)	Y (5)
SUR Tk CCWS Tr 4	30KAA40BB001	34UJK31025	M	M	ES	SI	S	C/NM		Y (5)
Tk Tr 4 SUR Tk Lvl 2 Column	30KAA40BB301	34UJK31027	M	M	ES	SI	S	C/NM		Y (5)
Tk Tr 4 SUR Tk Lvl 1 Column	30KAA40BB302	34UJK31026	M	M	ES	SI	S	C/NM		Y (5)
CTR-V DW Trn40	30KAA40CF057	34UJH01024	M	H		SI	S	C/NM	Y (3)	Y (5)
F Trn40 HX Out Test Meas	30KAA40CF255	34UJH10026	M	H		SI	S	C/NM	Y (3)	Y (5)
F Retn SUR Tk40 Meas	30KAA40CF570	34UJH01026	M	H		SI	S	C/NM	Y (3)	Y (5)
L SUR TK40 MEAS	30KAA40CL598	34UJK31027	M	M		SI	S	C/NM		Y (5)
DP HX40 Meas	30KAA40CP051	34UJH05026	M	H		SI	S	C/NM	Y (3)	Y (5)
DP SUCT STRN40	30KAA40CP274	34UJH01026	M	H		SI	S	C/NM	Y (3)	Y (5)
P Dnstr HX40	30KAA40CP297	34UJH10026	M	H		SI	S	C/NM	Y (3)	Y (5)
P Upstr PP40	30KAA40CP578	34UJH01026	M	H		SI	S	C/NM	Y (3)	Y (5)
P Test Dnstr PP40	30KAA40CP579	34UJH01026	M	H		SI	S	C/NM	Y (3)	Y (5)
T CW Users Trn40	30KAA40CP587	34UJH10026	M	H		SI	S	C/NM	Y (3)	Y (5)
P M CL PP40	30KAA40CP591	34UJH01026	M	H		SI	S	C/NM	Y (3)	Y (5)
T Outl HX40 Meas	30KAA40CT090	34UJH10026	M	H		SI	S	C/NM	Y (3)	Y (5)
T Inl HX40 Meas	30KAA40CT092	34UJH01026	M	H		SI	S	C/NM	Y (3)	Y (5)
T Retn CCWS Pp Cl4	30KAA40CT288	34UJH01026	M	H		SI	S	C/NM	Y (3)	Y (5)
Isol-V Jng40 AC001	30KAA42AA005	34UJH10004	M	H	ES	SI	S	C/NM	Y (3)	Y (5)
V Upstr Cl MHSI PP4	30KAA42AA006	34UJH01001	M	H	ES	SI	S	C/NM	Y (3)	Y (5)
V Dnstr Cl MHSI PP4	30KAA42AA009	34UJH01001	M	H	ES	SI	S	C/NM	Y (3)	Y (5)
V Dnstr Jng40 AC001	30KAA42AA011	34UJH05026	M	H	ES	SI	S	C/NM	Y (3)	Y (5)

Table 3.10-1—List of Seismically and Dynamically Qualified Mechanical and Electrical Equipment (Sheet 73 of 197)

Name Tag (Equipment Description)	Tag Number	Local Area KKS ID (Room Location)	EQ Environment (Note 1)	Radiation Environment Zone (Note 2)	EQ Designated Function (Note 3)		Safety Class (Note 4)		EQ Program Designation (Note 5)	
Ck-V Dnstr LHSI HX 4	30KAA42AA012	34UJH05026	M	H	ES	SI	S	C/NM	Y (3)	Y (5)
FAJ-V Cl MHSI PP4	30KAA42AA115	34UJH01001	M	H	ES	SI	S	C/NM	Y (3)	Y (5)
RL-V LHSI HX 4	30KAA42AA191	34UJH05005	M	H	ES	SI	S	C/NM	Y (3)	Y (5)
RL-V MHSI PP4 Mtr Clr	30KAA42AA194	34UJH01002	M	H	ES	SI	S	C/NM	Y (3)	Y (5)
V F KAA42 CF066	30KAA42AA301	34UJH01001	M	H	ES	SI	S	C/NM	Y (3)	Y (5)
V F KAA42 CF066	30KAA42AA302	34UJH01001	M	H	ES	SI	S	C/NM	Y (3)	Y (5)
V F KAA42 CF062	30KAA42AA305	34UJH05026	M	H	ES	SI	S	C/NM	Y (3)	Y (5)
V F KAA42 CF062	30KAA42AA306	34UJH05026	M	H	ES	SI	S	C/NM	Y (3)	Y (5)
D-V MHSI PP40	30KAA42AA402	34UJH01001	M	H	ES	SI	S	C/NM	Y (3)	Y (5)
D-V MHSI PP40	30KAA42AA404	34UJH01001	M	H	ES	SI	S	C/NM	Y (3)	Y (5)
D-V LHSI HX40	30KAA42AA405	34UJH05005	M	H	ES	SI	S	C/NM	Y (3)	Y (5)
V-V LHSI HX40	30KAA42AA501	34UJH05005	M	H	ES	SI	S	C/NM	Y (3)	Y (5)
BP Retn LHSI HX4	30KAA42BP005	34UJH05005	M	H	ES	SI	S	C/NM	Y (3)	Y (5)
F Test MHSI PP3	30KAA42CF264	34UJH01001	M	H		SI	S	C/NM	Y (3)	Y (5)
T Dnstr MHSI PP4	30KAA42CT258	34UJH01001	M	H		SI	S	C/NM	Y (3)	Y (5)
T Dnstr LHSI HX4	30KAA42CT555	34UJH05005	M	H		SI	S	C/NM	Y (3)	Y (5)
HX Ded CCWS PP MTR CLR	30KAA80AC002	34UJH01026	M	H		SII	NS-AQ			Y (5)
Mtr Htr Dedicated CCWS PP	30KAA80AH500	34UJH01026	M	H		SII	NS-AQ			Y (5)
V KAA10 to Com1B	30KAB10AA002	31UJH10004	M	H	ES	SI	S	C/NM	Y (3)	Y (5)
V KAA10 to Com1A	30KAB10AA003	31UJH10004	M	H	ES	SI	S	C/NM	Y (3)	Y (5)
V KAA20 to Com1A	30KAB10AA004	32UJH10002	M	H	ES	SI	S	C/NM	Y (3)	Y (5)
V Com1A to KAA20	30KAB10AA007	32UJH10002	M	H	ES	SI	S	C/NM	Y (3)	Y (5)
V Com1A to KAA10	30KAB10AA010	31UJH10004	M	H	ES	SI	S	C/NM	Y (3)	Y (5)
V Com1B to KAA10	30KAB10AA011	31UJH10004	M	H	ES	SI	S	C/NM	Y (3)	Y (5)
V Upstr KUA30 AC001	30KAB10AA013	30UFA06082	M	H	ES	SI	S	C/NM	Y (3)	Y (5)
V Dnstr KUA30 AC001	30KAB10AA015	30UFA06082	M	H	ES	SI	S	C/NM	Y (3)	Y (5)
V Upstr KUA20 AC001	30KAB10AA016	30UFA06082	M	H	ES	SI	S	C/NM	Y (3)	Y (5)
V Dnstr KUA20 AC001	30KAB10AA018	30UFA06082	M	H	ES	SI	S	C/NM	Y (3)	Y (5)
V Upstr FAK10 AC001	30KAB10AA019	30UFA06023	M	H	ES	SI	S	C/NM	Y (3)	Y (5)
V Dnstr FAK10 AC001	30KAB10AA020	30UFA06023	M	H	ES	SI	S	C/NM	Y (3)	Y (5)
V Upstr Cl *KBA* PP1	30KAB10AA022	30UFA06036	M	H	ES	SI	S	C/NM	Y (3)	Y (5)
V Dnstr Cl *KBA* PP1	30KAB10AA027	30UFA06036	M	H	ES	SI	S	C/NM	Y (3)	Y (5)
V Upstr QUC11 AC001	30KAB10AA028	30UFA06083	M	H	ES	SI	S	C/NM	Y (3)	Y (5)

Table 3.10-1—List of Seismically and Dynamically Qualified Mechanical and Electrical Equipment (Sheet 74 of 197)

Name Tag (Equipment Description)	Tag Number	Local Area KKS ID (Room Location)	EQ Environment (Note 1)	Radiation Environment Zone (Note 2)	EQ Designated Function (Note 3)		Safety Class (Note 4)		EQ Program Designation (Note 5)	
V Upstr QUC12 AC001	30KAB10AA030	30UFA06083	M	H	ES	SI	S	C/NM	Y (3)	Y (5)
V Dnstr QUC11 AC001	30KAB10AA032	30UFA06083	M	H	ES	SI	S	C/NM	Y (3)	Y (5)
V Dnstr QUC12 AC001	30KAB10AA033	30UFA06083	M	H	ES	SI	S	C/NM	Y (3)	Y (5)
V Upstr KLL61 AC002	30KAB10AA042	30UFA05026	M	H	ES	SI	S	C/NM	Y (3)	Y (5)
V Upstr KLL61 AC003	30KAB10AA043	30UFA05026	M	H	ES	SI	S	C/NM	Y (3)	Y (5)
V Dnstr KLL61AC002	30KAB10AA044	30UFA05026	M	H	ES	SI	S	C/NM	Y (3)	Y (5)
V Dnstr KLL61 AC003	30KAB10AA045	30UFA05026	M	H	ES	SI	S	C/NM	Y (3)	Y (5)
FAJ-V KUA30 AC001	30KAB10AA114	30UFA06082	M	H	ES	SI	S	C/NM	Y (3)	Y (5)
FAJ-V KLL61 AC002	30KAB10AA115	30UFA05026	M	H	ES	SI	S	C/NM	Y (3)	Y (5)
FAJ-V KLL61 AC003	30KAB10AA116	30UFA05026	M	H	ES	SI	S	C/NM	Y (3)	Y (5)
FAJ-V KUA20 AC001	30KAB10AA117	30UFA06082	M	H	ES	SI	S	C/NM	Y (3)	Y (5)
FAJ-V KBA31 AC103	30KAB10AA123	30UFA06035	M	H	ES	SI	S	C/NM	Y (3)	Y (5)
FAJ-V KBA31 AC102	30KAB10AA124	30UFA06035	M	H	ES	SI	S	C/NM	Y (3)	Y (5)
FAJ-V KBA31 AC101	30KAB10AA126	30UFA06035	M	H	ES	SI	S	C/NM	Y (3)	Y (5)
FAJ-V QUC11 AC001	30KAB10AA129	30UFA06083	M	H	ES	SI	S	C/NM	Y (3)	Y (5)
FAJ-V QUC12 AC001	30KAB10AA131	30UFA06083	M	H	ES	SI	S	C/NM	Y (3)	Y (5)
FAJ-V FAK10 AC001	30KAB10AA134	30UFA06023	M	H	ES	SI	S	C/NM	Y (3)	Y (5)
RL-V FPCS HX 1	30KAB10AA190	30UFA06023	M	H	ES	SI	S	C/NM	Y (3)	Y (5)
RL-V FBVS Clr KLL61AC002	30KAB10AA191	30UFA05026	M	H	ES	SI	S	C/NM	Y (3)	Y (5)
RL-V Return Com1A	30KAB10AA193	31UJH10004	M	H	ES	SI	S	C/NM	Y (3)	Y (5)
RL-V Sampl Clr QUC11 AC001	30KAB10AA194	30UFA06083	M	H	ES	SI	S	C/NM	Y (3)	Y (5)
RL-V Sampl Clr QUC12 AC001	30KAB10AA195	30UFA06083	M	H	ES	SI	S	C/NM	Y (3)	Y (5)
RL-V Sampl Clr KUA20 AC001	30KAB10AA196	30UFA06082	M	H	ES	SI	S	C/NM	Y (3)	Y (5)
RL-V Sampl Clr KUA30 AC001	30KAB10AA197	30UFA06082	M	H	ES	SI	S	C/NM	Y (3)	Y (5)
RL-V CVCS PP1 Clrs	30KAB10AA198	30UFA06036	M	H	ES	SI	S	C/NM	Y (3)	Y (5)
RL-V FBVS Clr KLL61AC003	30KAB10AA199	30UFA01026	M	H	ES	SI	S	C/NM	Y (3)	Y (5)
V F KAB10 CF070	30KAB10AA301	30UFA10002	M	H	ES	SI	S	C/NM	Y (3)	Y (5)
V F KAB10 CF070	30KAB10AA302	30UFA10002	M	H	ES	SI	S	C/NM	Y (3)	Y (5)
V P KAB10 CP292	30KAB10AA303	30UFA06035	M	H	ES	SI	S	C/NM	Y (3)	Y (5)
V F KAB10 CF093	30KAB10AA304	30UFA06035	M	H	ES	SI	S	C/NM	Y (3)	Y (5)
V F KAB10 CF093	30KAB10AA305	30UFA06035	M	H	ES	SI	S	C/NM	Y (3)	Y (5)
V P KAB10 CP262	30KAB10AA306	30UFA06035	M	H	ES	SI	S	C/NM	Y (3)	Y (5)
V P KAB10 CP260	30KAB10AA307	30UFA06035	M	H	ES	SI	S	C/NM	Y (3)	Y (5)

Table 3.10-1—List of Seismically and Dynamically Qualified Mechanical and Electrical Equipment (Sheet 75 of 197)

Name Tag (Equipment Description)	Tag Number	Local Area KKS ID (Room Location)	EQ Environment (Note 1)	Radiation Environment Zone (Note 2)	EQ Designated Function (Note 3)		Safety Class (Note 4)		EQ Program Designation (Note 5)	
V F KAB10 CF567	30KAB10AA308	30UFA01026	M	H	ES	SI	S	C/NM	Y (3)	Y (5)
V F KAB10 CF567	30KAB10AA309	30UFA01026	M	H	ES	SI	S	C/NM	Y (3)	Y (5)
V P KAB10 CP254	30KAB10AA310	30UFA06082	M	H	ES	SI	S	C/NM	Y (3)	Y (5)
V F KAB10 CF566	30KAB10AA311	30UFA06086	M	H	ES	SI	S	C/NM	Y (3)	Y (5)
V F KAB10 CF566	30KAB10AA312	30UFA06086	M	H	ES	SI	S	C/NM	Y (3)	Y (5)
V F KAB10 CF564	30KAB10AA313	30UFA06086	M	H	ES	SI	S	C/NM	Y (3)	Y (5)
V F KAB10 CF564	30KAB10AA314	30UFA06086	M	H	ES	SI	S	C/NM	Y (3)	Y (5)
V F KAB10 CF568	30KAB10AA315	30UFA06083	M	H	ES	SI	S	C/NM	Y (3)	Y (5)
V F KAB10 CF568	30KAB10AA316	30UFA06083	M	H	ES	SI	S	C/NM	Y (3)	Y (5)
V P KAB10 CP282	30KAB10AA317	30UFA06084	M	H	ES	SI	S	C/NM	Y (3)	Y (5)
V P KAB10 CP256	30KAB10AA318	30UFA06082	M	H	ES	SI	S	C/NM	Y (3)	Y (5)
V P JAB10 CP284	30KAB10AA319	30UFA06036	M	H	ES	SI	S	C/NM	Y (3)	Y (5)
D-V Dnr FPCS HX1	30KAB10AA401	30UFA06023	M	H	ES	SI	S	C/NM	Y (3)	Y (5)
D-V Upr FPC HX1	30KAB10AA402	30UFA06023	M	H	ES	SI	S	C/NM	Y (3)	Y (5)
D-V Upr SAMPL CLRS	30KAB10AA404	30UFA06082	M	H	ES	SI	S	C/NM	Y (3)	Y (5)
D-V Upr CVCS and Sampl Clrs	30KAB10AA405	30UFA06082	M	H	ES	SI	S	C/NM	Y (3)	Y (5)
D-V Dnstr NSS1	30KAB10AA408	30UFA06086	M	H	ES	SI	S	C/NM	Y (3)	Y (5)
D-V Dnr CVCS CL1	30KAB10AA409	30UFA06036	M	H	ES	SI	S	C/NM	Y (3)	Y (5)
D-V Dnr CVCS and Sampl Clrs	30KAB10AA410	30UFA06023	M	H	ES	SI	S	C/NM	Y (3)	Y (5)
D-V10 Sup Com1A	30KAB10AA411	31UJH10004	M	H	ES	SI	S	C/NM	Y (3)	Y (5)
D-V10 Sup Com1B	30KAB10AA412	31UJH10004	M	H	ES	SI	S	C/NM	Y (3)	Y (5)
D-V20 Sup Com1A	30KAB10AA413	32UJH10002	M	H	ES	SI	S	C/NM	Y (3)	Y (5)
D-V10 Retn Com1B	30KAB10AA415	31UJH10004	M	H	ES	SI	S	C/NM	Y (3)	Y (5)
D-V10 Retn Com1A	30KAB10AA416	31UJH10004	M	H	ES	SI	S	C/NM	Y (3)	Y (5)
D-V20 Retn Com1A	30KAB10AA418	32UJH10002	M	H	ES	SI	S	C/NM	Y (3)	Y (5)
D-V Upr FPC HX1	30KAB10AA419	31UJH10004	M	H	ES	SI	S	C/NM	Y (3)	Y (5)
D-V Upstr KBA CLR	30KAB10AA420	30UFA06036	M	H	ES	SI	S	C/NM	Y (3)	Y (5)
D-V Samp HX SG1	30KAB10AA421	30UFA06083	M	H	ES	SI	S	C/NM	Y (3)	Y (5)
D-V Samp HX SG2	30KAB10AA422	30UFA06083	M	H	ES	SI	S	C/NM	Y (3)	Y (5)
D-V Upr Samp HL1	30KAB10AA423	30UFA06082	M	H	ES	SI	S	C/NM	Y (3)	Y (5)
D-V Upr Samp PZR	30KAB10AA424	30UFA06082	M	H	ES	SI	S	C/NM	Y (3)	Y (5)
D-V Samp HX SG1	30KAB10AA425	30UFA06083	M	H	ES	SI	S	C/NM	Y (3)	Y (5)
D-V Samp HX SG2	30KAB10AA426	30UFA06083	M	H	ES	SI	S	C/NM	Y (3)	Y (5)

Table 3.10-1—List of Seismically and Dynamically Qualified Mechanical and Electrical Equipment (Sheet 76 of 197)

Name Tag (Equipment Description)	Tag Number	Local Area KKS ID (Room Location)	EQ Environment (Note 1)	Radiation Environment Zone (Note 2)	EQ Designated Function (Note 3)		Safety Class (Note 4)		EQ Program Designation (Note 5)	
D-V Dwr Samp HL1	30KAB10AA427	30UFA06082	M	H	ES	SI	S	C/NM	Y (3)	Y (5)
D-V Dwr Samp HL2	30KAB10AA428	30UFA06082	M	H	ES	SI	S	C/NM	Y (3)	Y (5)
D-V Dwr Samp Clrs	30KAB10AA429	30UFA06084	M	H	ES	SI	S	C/NM	Y (3)	Y (5)
V-V Upr Sampl Clrs	30KAB10AA501	30UFA06082	M	H	ES	SI	S	C/NM	Y (3)	Y (5)
V-V Upr CVCS and Sampl Clrs	30KAB10AA502	30UFA06082	M	H	ES	SI	S	C/NM	Y (3)	Y (5)
V-V Dnr NSS CL1	30KAB10AA503	30UFA06086	M	H	ES	SI	S	C/NM	Y (3)	Y (5)
V-V20 Sup Com1A	30KAB10AA505	33UJH10002	M	H	ES	SI	S	C/NM	Y (3)	Y (5)
V-V20 Sup Com1B	30KAB10AA506	32UJH10002	M	H	ES	SI	S	C/NM	Y (3)	Y (5)
V-V Upr FPC HX1	30KAB10AA507	31UJH10004	M	H	ES	SI	S	C/NM	Y (3)	Y (5)
V-V20 Retn Com1B	30KAB10AA508	32UJH10002	M	H	ES	SI	S	C/NM	Y (3)	Y (5)
V-V Dnstr Com1A	30KAB10AA510	31UJH10004	M	H	ES	SI	S	C/NM	Y (3)	Y (5)
V-V Upstr RCS CL	30KAB10AA512	30UFA06082	M	H	ES	SI	S	C/NM	Y (3)	Y (5)
V-V Dnstr QUC11	30KAB10AA513	30UFA06083	M	H	ES	SI	S	C/NM	Y (3)	Y (5)
V-V Dnstr QUC12	30KAB10AA514	30UFA06083	M	H	ES	SI	S	C/NM	Y (3)	Y (5)
V-V Dnstr KUA30	30KAB10AA515	30UFA06082	M	H	ES	SI	S	C/NM	Y (3)	Y (5)
V-V Dnstr KUA10	30KAB10AA516	30UFA06082	M	H	ES	SI	S	C/NM	Y (3)	Y (5)
V-V Dnstr KBA Cl	30KAB10AA517	30UFA06036	M	H	ES	SI	S	C/NM	Y (3)	Y (5)
V-V Upstr Com1B	30KAB10AA518	31UJH10004	M	H	ES	SI	S	C/NM	Y (3)	Y (5)
V-V Dnstr Com1B	30KAB10AA519	31UJH10004	M	H	ES	SI	S	C/NM	Y (3)	Y (5)
V-V Dnstr Com1A	30KAB10AA522	30UFA06023	M	H	ES	SI	S	C/NM	Y (3)	Y (5)
V-V Upstr Com1A	30KAB10AA523	30UFA06023	M	H	ES	SI	S	C/NM	Y (3)	Y (5)
F FPCS HX1 MEAS	30KAB10CF070	30UFA10002	M	H	ES	SI	S	C/NM	Y (3)	Y (5)
F CVCS PP1	30KAB10CF093	30UFA06035	M	H		SI	S	C/NM	Y (3)	Y (5)
F Test CVCS PP1	30KAB10CF289	30UFA06035	M	H		SI	S	C/NM	Y (3)	Y (5)
F NSS SG1 SG2	30KAB10CF564	30UFA06086	M	H		SI	S	C/NM	Y (3)	Y (5)
F NSS HL1 PZR	30KAB10CF566	30UFA06086	M	H		SI	S	C/NM	Y (3)	Y (5)
F Dnstr KLL61AC002-3	30KAB10CF567	30UFA05026	M	H		SI	S	C/NM	Y (3)	Y (5)
P Test Dnr QUC11 AC001	30KAB10CP250	30UFA06083	M	H		SI	S	C/NM	Y (3)	Y (5)
P Test Dnr QUC12 AC001	30KAB10CP252	30UFA06083	M	H		SI	S	C/NM	Y (3)	Y (5)
P Test Dnr KUA30 AC001	30KAB10CP254	30UFA06082	M	H		SI	S	C/NM	Y (3)	Y (5)
P Test Dnr KUA20 AC001	30KAB10CP256	30UFA06082	M	H		SI	S	C/NM	Y (3)	Y (5)
P Test Dnr KBA31 AC103	30KAB10CP260	30UFA06035	M	H		SI	S	C/NM	Y (3)	Y (5)
P Test Dnr KBA31 AC101	30KAB10CP262	30UFA06035	M	H		SI	S	C/NM	Y (3)	Y (5)

Table 3.10-1—List of Seismically and Dynamically Qualified Mechanical and Electrical Equipment (Sheet 77 of 197)

Name Tag (Equipment Description)	Tag Number	Local Area KKS ID (Room Location)	EQ Environment (Note 1)	Radiation Environment Zone (Note 2)	EQ Designated Function (Note 3)	Safety Class (Note 4)	EQ Program Designation (Note 5)
P Test Upr Sampl Clrs	30KAB10CP282	30UFA06083	M	H	SI	S C/NM	Y (3) Y (5)
P Test Upstr KBA Clr	30KAB10CP284	30UFA06023	M	H	SI	S C/NM	Y (3) Y (5)
P Test KBA31 AC102	30KAB10CP292	30UFA06035	M	H	SI	S C/NM	Y (3) Y (5)
T Test Upstr FPCS HX1	30KAB10CT267	30UFA06023	M	H	SI	S C/NM	Y (3) Y (5)
T Test Dnstr FPCS HX1	30KAB10CT268	30UFA06023	M	H	SI	S C/NM	Y (3) Y (5)
T Test NSS SG1 SG2	30KAB10CT272	30UFA06083	M	H	SI	S C/NM	Y (3) Y (5)
T Test NSS HL1 PZR	30KAB10CT273	30UFA06082	M	H	SI	S C/NM	Y (3) Y (5)
T Dnstr FPCS HX1	30KAB10CT565	30UFA06023	M	H	SI	S C/NM	Y (3) Y (5)
T CVCS PP1	30KAB10CT578	30UFA06035	M	H	SI	S C/NM	Y (3) Y (5)
V Sup Trn40 Com 2A	30KAB20AA001	34UJH10004	M	H	ES SI	S C/NM	Y (3) Y (5)
V Sup Trn40 Com 2B	30KAB20AA002	34UJH10004	M	H	ES SI	S C/NM	Y (3) Y (5)
V Sup Trn30 Com 2A	30KAB20AA003	33UJH10002	M	H	ES SI	S C/NM	Y (3) Y (5)
V Retn Com2A Trn30	30KAB20AA006	33UJH10002	M	H	ES SI	S C/NM	Y (3) Y (5)
V Retn Com2A Trn40	30KAB20AA011	34UJH10004	M	H	ES SI	S C/NM	Y (3) Y (5)
V Retn CoM2B Trn40	30KAB20AA012	34UJH10004	M	H	ES SI	S C/NM	Y (3) Y (5)
V Upstr FAK20 AC001	30KAB20AA016	30UFA06074	M	H	ES SI	S C/NM	Y (3) Y (5)
V Dnstr FAK20 AC001	30KAB20AA017	30UFA06074	M	H	ES SI	S C/NM	Y (3) Y (5)
V Upstr Cl *KBA* PP2	30KAB20AA023	30UFA06084	M	H	ES SI	S C/NM	Y (3) Y (5)
V Dnstr Cl *KBA* PP2	30KAB20AA025	30UFA06084	M	H	ES SI	S C/NM	Y (3) Y (5)
V Upstr KUA10 AC001	30KAB20AA030	30UFA06084	M	H	ES SI	S C/NM	Y (3) Y (5)
V Dnstr KUA10 AC001	30KAB20AA032	30UFA06086	M	H	ES SI	S C/NM	Y (3) Y (5)
V Upstr QUC13 AC001	30KAB20AA033	30UFA06083	M	H	ES SI	S C/NM	Y (3) Y (5)
V Dnstr QUC13 AC001	30KAB20AA036	30UFA06083	M	H	ES SI	S C/NM	Y (3) Y (5)
V Dnstr QUC14 AC001	30KAB20AA038	30UFA06083	M	H	ES SI	S C/NM	Y (3) Y (5)
V Upstr QUC14 AC001	30KAB20AA039	30UFA06084	M	H	ES SI	S C/NM	Y (3) Y (5)
V Upstr KLL64 AC002	30KAB20AA042	30UFA05076	M	H	ES SI	S C/NM	Y (3) Y (5)
V Upstr KLL64 AC003	30KAB20AA043	30UFA05076	M	H	ES SI	S C/NM	Y (3) Y (5)
V Dnstr KLL64 AC002	30KAB20AA044	30UFA05076	M	H	ES SI	S C/NM	Y (3) Y (5)
V Dnstr KLL64 AC003	30KAB20AA045	30UFA05076	M	H	ES SI	S C/NM	Y (3) Y (5)
FAJ-V KLL64 AC002	30KAB20AA115	30UFA05076	M	H	ES SI	S C/NM	Y (3) Y (5)
FAJ-V KLL64 AC003	30KAB20AA116	30UFA05076	M	H	ES SI	S C/NM	Y (3) Y (5)
FAJ-V CVCS PP Oil 2	30KAB20AA124	30UFA06085	M	H	ES SI	S C/NM	Y (3) Y (5)
FAJ-V CVCS PP SI 2	30KAB20AA126	30UFA06085	M	H	ES SI	S C/NM	Y (3) Y (5)

Table 3.10-1—List of Seismically and Dynamically Qualified Mechanical and Electrical Equipment (Sheet 78 of 197)

Name Tag (Equipment Description)	Tag Number	Local Area KKS ID (Room Location)	EQ Environment (Note 1)	Radiation Environment Zone (Note 2)	EQ Designated Function (Note 3)		Safety Class (Note 4)		EQ Program Designation (Note 5)	
FAJ-V CVCS PP M 2	30KAB20AA127	30UFA06085	M	H	ES	SI	S	C/NM	Y (3)	Y (5)
FAJ-V KUA10 AC001	30KAB20AA131	30UFA06082	M	H	ES	SI	S	C/NM	Y (3)	Y (5)
FAJ-V FAK20 AC001	30KAB20AA134	30UFA06074	M	H	ES	SI	S	C/NM	Y (3)	Y (5)
FAJ-V QUC13 AC001	30KAB20AA135	30UFA06083	M	H	ES	SI	S	C/NM	Y (3)	Y (5)
FAJ-V QUC14 AC001	30KAB20AA137	30UFA06083	M	H	ES	SI	S	C/NM	Y (3)	Y (5)
RL-V FPCS HX 2	30KAB20AA190	30UFA06074	M	H	ES	SI	S	C/NM	Y (3)	Y (5)
RL-V FBVS Clr KLL64AC002	30KAB20AA191	30UFA05076	M	H	ES	SI	S	C/NM	Y (3)	Y (5)
RL-V Dnstr Com2B	30KAB20AA192	34UJH10004	M	H	ES	SI	S	C/NM	Y (3)	Y (5)
RL-V Dnstr Com2A	30KAB20AA193	34UJH10004	M	H	ES	SI	S	C/NM	Y (3)	Y (5)
RL-V Sampl Clr KUA10 AC001	30KAB20AA194	30UFA06084	M	H	ES	SI	S	C/NM	Y (3)	Y (5)
RL-V Sampl Clr QUC13 AC001	30KAB20AA195	30UFA06083	M	H	ES	SI	S	C/NM	Y (3)	Y (5)
RL-V Sampl Clr QUC14 AC001	30KAB20AA196	30UFA06083	M	H	ES	SI	S	C/NM	Y (3)	Y (5)
RL-V CVCS PP2 Clrs	30KAB20AA198	30UFA06084	M	H	ES	SI	S	C/NM	Y (3)	Y (5)
RL-V FBVS Clr KLL64AC003	30KAB20AA199	30UFA05076	M	H	ES	SI	S	C/NM	Y (3)	Y (5)
V F KAB20 CF070	30KAB20AA301	30UFA10052	M	H	ES	SI	S	C/NM	Y (3)	Y (5)
V F KAB20 CF070	30KAB20AA302	30UFA10052	M	H	ES	SI	S	C/NM	Y (3)	Y (5)
V P KAB20 CP292	30KAB20AA303	30UFA06085	M	H	ES	SI	S	C/NM	Y (3)	Y (5)
V F KAB20 CF093	30KAB20AA304	30UFA06085	M	H	ES	SI	S	C/NM	Y (3)	Y (5)
V F KAB20 CF093	30KAB20AA305	30UFA06085	M	H	ES	SI	S	C/NM	Y (3)	Y (5)
V P KAB20 CP262	30KAB20AA306	30UFA06085	M	H	ES	SI	S	C/NM	Y (3)	Y (5)
V P KAB20 CP260	30KAB20AA307	30UFA06085	M	H	ES	SI	S	C/NM	Y (3)	Y (5)
V F KAB20 CF567	30KAB20AA308	30UFA06074	M	H	ES	SI	S	C/NM	Y (3)	Y (5)
V F KAB20 CF567	30KAB20AA309	30UFA06074	M	H	ES	SI	S	C/NM	Y (3)	Y (5)
V P KAB20 CP256	30KAB20AA310	30UFA06082	M	H	ES	SI	S	C/NM	Y (3)	Y (5)
V F KAB20 CF566	30KAB20AA311	30UFA06086	M	H	ES	SI	S	C/NM	Y (3)	Y (5)
V F KAB20 CF566	30KAB20AA312	30UFA06086	M	H	ES	SI	S	C/NM	Y (3)	Y (5)
V F KAB20 CF564	30KAB20AA313	30UFA06086	M	H	ES	SI	S	C/NM	Y (3)	Y (5)
V F KAB20 CF564	30KAB20AA314	30UFA06086	M	H	ES	SI	S	C/NM	Y (3)	Y (5)
V F KAB20CF568	30KAB20AA315	30UFA06083	M	H	ES	SI	S	C/NM	Y (3)	Y (5)
V F KAB20CF568	30KAB20AA316	30UFA06083	M	H	ES	SI	S	C/NM	Y (3)	Y (5)
V P KAB20 CP280	30KAB20AA317	30UFA06085	M	H	ES	SI	S	C/NM	Y (3)	Y (5)
V P KAB20 CP279	30KAB20AA318	30UFA06084	M	H	ES	SI	S	C/NM	Y (3)	Y (5)
D-V Upr FPCS HX2	30KAB20AA401	30UFA06074	M	H	ES	SI	S	C/NM	Y (3)	Y (5)

Table 3.10-1—List of Seismically and Dynamically Qualified Mechanical and Electrical Equipment (Sheet 79 of 197)

Name Tag (Equipment Description)	Tag Number	Local Area KKS ID (Room Location)	EQ Environment (Note 1)	Radiation Environment Zone (Note 2)	EQ Designated Function (Note 3)		Safety Class (Note 4)		EQ Program Designation (Note 5)	
D-V Dnr FPCS HX2	30KAB20AA402	30UFA06074	M	H	ES	SI	S	C/NM	Y (3)	Y (5)
D-V Upr CVCS Cl2	30KAB20AA404	30UFA06084	M	H	ES	SI	S	C/NM	Y (3)	Y (5)
D-V Dnr CVCS Cl2	30KAB20AA407	30UFA06084	M	H	ES	SI	S	C/NM	Y (3)	Y (5)
D-V40 Sup Com2A	30KAB20AA411	34UJH10004	M	H	ES	SI	S	C/NM	Y (3)	Y (5)
D-V40 Sup Com2B	30KAB20AA412	34UJH10004	M	H	ES	SI	S	C/NM	Y (3)	Y (5)
D-V30 Sup Com2A	30KAB20AA413	33UJH10002	M	H	ES	SI	S	C/NM	Y (3)	Y (5)
D-V40 Retn Com2B	30KAB20AA415	34UJH10004	M	H	ES	SI	S	C/NM	Y (3)	Y (5)
D-V40 Retn Com2A	30KAB20AA416	34UJH10004	M	H	ES	SI	S	C/NM	Y (3)	Y (5)
D-V30 Retn Com2A	30KAB20AA418	33UJH10002	M	H	ES	SI	S	C/NM	Y (3)	Y (5)
D-V40 Sup Com2A	30KAB20AA419	34UJH10004	M	H	ES	SI	S	C/NM	Y (3)	Y (5)
D-V Samp HX SG1	30KAB20AA421	30UFA06083	M	H	ES	SI	S	C/NM	Y (3)	Y (5)
D-V Samp HX SG2	30KAB20AA422	30UFA06083	M	H	ES	SI	S	C/NM	Y (3)	Y (5)
D-V Upr Samp HL3	30KAB20AA423	30UFA06082	M	H	ES	SI	S	C/NM	Y (3)	Y (5)
D-V Samp HX SG3	30KAB20AA425	30UFA06083	M	H	ES	SI	S	C/NM	Y (3)	Y (5)
D-V Samp HX SG4	30KAB20AA426	30UFA06083	M	H	ES	SI	S	C/NM	Y (3)	Y (5)
D-V Upr Samp HL3	30KAB20AA427	30UFA06082	M	H	ES	SI	S	C/NM	Y (3)	Y (5)
V-V40 Sup Com2A	30KAB20AA503	34UJH10004	M	H	ES	SI	S	C/NM	Y (3)	Y (5)
V-V30 Sup Com2A	30KAB20AA504	33UJH10002	M	H	ES	SI	S	C/NM	Y (3)	Y (5)
V-V30 SUp Com2B	30KAB20AA505	33UJH10002	M	H	ES	SI	S	C/NM	Y (3)	Y (5)
V-V30 Retn Com2B	30KAB20AA506	33UJH10002	M	H	ES	SI	S	C/NM	Y (3)	Y (5)
V-V30 Retn Com2A	30KAB20AA507	33UJH10002	M	H	ES	SI	S	C/NM	Y (3)	Y (5)
V-V40 Retn Com2A	30KAB20AA508	34UJH10004	M	H	ES	SI	S	C/NM	Y (3)	Y (5)
V-V Sup CVCS HP2	30KAB20AA509	34UJH10004	M	H	ES	SI	S	C/NM	Y (3)	Y (5)
V-V40 Retn Com2B	30KAB20AA510	34UJH10004	M	H	ES	SI	S	C/NM	Y (3)	Y (5)
V-V Upstr FB2 Cl	30KAB20AA511	30UFA06085	M	H	ES	SI	S	C/NM	Y (3)	Y (5)
V-V Dnstr QUC13	30KAB20AA513	30UFA06083	M	H	ES	SI	S	C/NM	Y (3)	Y (5)
V-V Dnstr QUC14	30KAB20AA514	30UFA06083	M	H	ES	SI	S	C/NM	Y (3)	Y (5)
V-V Dnstr KUA20	30KAB20AA515	30UFA06082	M	H	ES	SI	S	C/NM	Y (3)	Y (5)
V-V Dnstr KBA Cl	30KAB20AA516	30UFA06085	M	H	ES	SI	S	C/NM	Y (3)	Y (5)
F FPCS HX2 Meas	30KAB20CF070	30UFA10052	M	H	ES	SI	S	C/NM	Y (3)	Y (5)
F CVCS PP2	30KAB20CF093	30UFA06085	M	H		SI	S	C/NM	Y (3)	Y (5)
F Test CVCS PP2	30KAB20CF289	30UFA06085	M	H		SI	S	C/NM	Y (3)	Y (5)
F NSS SG3 SG4	30KAB20CF564	30UFA06086	M	H		SI	S	C/NM	Y (3)	Y (5)

Table 3.10-1—List of Seismically and Dynamically Qualified Mechanical and Electrical Equipment (Sheet 80 of 197)

Name Tag (Equipment Description)	Tag Number	Local Area KKS ID (Room Location)	EQ Environment (Note 1)	Radiation Environment Zone (Note 2)	EQ Designated Function (Note 3)		Safety Class (Note 4)		EQ Program Designation (Note 5)	
F Dnstr NSS HL3	30KAB20CF566	30UFA06086	M	H		SI	S	C/NM	Y (3)	Y (5)
F Dnstr KLL64AC002-3	30KAB20CF567	30UFA06074	M	H		SI	S	C/NM	Y (3)	Y (5)
P Test Dnr QUC13 AC001	30KAB20CP252	30UFA06083	M	H		SI	S	C/NM	Y (3)	Y (5)
P Test Dnr QUC14 AC001	30KAB20CP254	30UFA06083	M	H		SI	S	C/NM	Y (3)	Y (5)
P Test Dnr KUA10 AC001	30KAB20CP256	30UFA06082	M	H		SI	S	C/NM	Y (3)	Y (5)
P Test Dnr CVCS PP Oil 2	30KAB20CP260	30UFA06085	M	H		SI	S	C/NM	Y (3)	Y (5)
P Test Dnr CVCS PP M 2	30KAB20CP262	30UFA06085	M	H		SI	S	C/NM	Y (3)	Y (5)
P Test Upr Sampl Clrs	30KAB20CP279	30UFA06084	M	H		SI	S	C/NM	Y (3)	Y (5)
P Test Upstr KBA Clr	30KAB20CP280	30UFA06084	M	H		SI	S	C/NM	Y (3)	Y (5)
P Test Dnr CVCS PP SI 2	30KAB20CP292	30UFA06085	M	H		SI	S	C/NM	Y (3)	Y (5)
T Upstr FPCS HX2	30KAB20CT267	30UFA05076	M	H		SI	S	C/NM	Y (3)	Y (5)
T Dnstr FPCS HX2	30KAB20CT268	30UFA06075	M	H		SI	S	C/NM	Y (3)	Y (5)
T Test NSS SG3 SG4	30KAB20CT272	30UFA06083	M	H		SI	S	C/NM	Y (3)	Y (5)
T Test NSS CL3	30KAB20CT273	30UFA06082	M	H		SI	S	C/NM	Y (3)	Y (5)
T Dnstr FPCS HX2	30KAB20CT565	30UFA06075	M	H		SI	S	C/NM	Y (3)	Y (5)
T CVCS PP2	30KAB20CT578	30UFA06084	M	H		SI	S	C/NM	Y (3)	Y (5)
V Upstr Cooler RCP 1	30KAB30AA011	30UJA18013	H	H	ES	SI	S	C/NM	Y (4)	Y (5)
V Dnstr Cooler RCP 1	30KAB30AA018	30UJA18013	H	H	ES	SI	S	C/NM	Y (4)	Y (5)
V Upstr Cooler RCP 2	30KAB30AA021	30UJA18014	H	H	ES	SI	S	C/NM	Y (4)	Y (5)
V Dnstr Cooler RCP 2	30KAB30AA028	30UJA18014	H	H	ES	SI	S	C/NM	Y (4)	Y (5)
V Upstr Cooler RCP 3	30KAB30AA031	30UJA18015	H	H	ES	SI	S	C/NM	Y (4)	Y (5)
V Dnstr Cooler RCP 3	30KAB30AA038	30UJA18015	H	H	ES	SI	S	C/NM	Y (4)	Y (5)
V Upstr Cooler RCP 4	30KAB30AA041	30UJA18016	H	H	ES	SI	S	C/NM	Y (4)	Y (5)
V Dnstr Cooler RCP 4	30KAB30AA048	30UJA18016	H	H	ES	SI	S	C/NM	Y (4)	Y (5)
Civ Upstr Thbarr 1&2	30KAB30AA050	30UJA11014	H	H	ES	SI	S	C/NM	Y (4)	Y (5)
Civ Upstr Thbarr 3&4	30KAB30AA054	30UJA11015	H	H	ES	SI	S	C/NM	Y (4)	Y (5)
FAJ-V JEB10 AC001	30KAB30AA112	30UJA18002	H	H	ES	SI	S	C/NM	Y (4)	Y (5)
FAJ-V JEB10 AC004	30KAB30AA116	30UJA23002	H	H	ES	SI	S	C/NM	Y (4)	Y (5)
FAJ-V JEB20 AC001	30KAB30AA122	30UJA18005	H	H	ES	SI	S	C/NM	Y (4)	Y (5)
FAJ-V JEB20 AC004	30KAB30AA126	30UJA23005	H	H	ES	SI	S	C/NM	Y (4)	Y (5)
FAJ-V JEB30 AC001	30KAB30AA132	30UJA18006	H	H	ES	SI	S	C/NM	Y (4)	Y (5)
FAJ-V JEB30 AC004	30KAB30AA136	30UJA23006	H	H	ES	SI	S	C/NM	Y (4)	Y (5)
FAJ-V JEB40 AC001	30KAB30AA142	30UJA18009	H	H	ES	SI	S	C/NM	Y (4)	Y (5)

Table 3.10-1—List of Seismically and Dynamically Qualified Mechanical and Electrical Equipment (Sheet 81 of 197)

Name Tag (Equipment Description)	Tag Number	Local Area KKS ID (Room Location)	EQ Environment (Note 1)	Radiation Environment Zone (Note 2)	EQ Designated Function (Note 3)		Safety Class (Note 4)		EQ Program Designation (Note 5)	
FAJ-V JEB40 AC004	30KAB30AA146	30UJA23009	H	H	ES	SI	S	C/NM	Y (4)	Y (5)
RL-V Return Thbarr 1&2	30KAB30AA191	30UJA15013	H	H	ES	SI	S	C/NM	Y (4)	Y (5)
RL-V Return Thbarr 3&4	30KAB30AA192	30UJA15015	H	H	ES	SI	S	C/NM	Y (4)	Y (5)
RL-V RCP1 Clrs	30KAB30AA193	30UJA18013	H	H	ES	SI	S	C/NM	Y (4)	Y (5)
RL-V RCP2 Clrs	30KAB30AA194	30UJA18014	H	H	ES	SI	S	C/NM	Y (4)	Y (5)
RL-V Cont Pen JMQ60 BQ118	30KAB30AA195	30UJA11013	H	H	ES	SI	S	C/NM	Y (4)	Y (5)
RL-V RCP3 Clrs	30KAB30AA196	30UJA18015	H	H	ES	SI	S	C/NM	Y (4)	Y (5)
RL-V RCP4 Clrs	30KAB30AA197	30UJA18016	H	H	ES	SI	S	C/NM	Y (4)	Y (5)
RL-V Cont Pen JMQ60 BQ421	30KAB30AA198	30UJA11015	H	H	ES	SI	S	C/NM	Y (4)	Y (5)
Tst C-V KAB30AA050	30KAB30AA251	30UJA11014	H	H	ES	SI	S	C/NM	Y (4)	Y (5)
Tst C-V KAB30AA050	30KAB30AA252	30UJA11014	H	H	ES	SI	S	C/NM	Y (4)	Y (5)
Tst C-V KAB30AA051	30KAB30AA255	30UJA11013	H	H	ES	SI	S	C/NM	Y (4)	Y (5)
Tst C-V KAB30AA051	30KAB30AA256	30UJA11013	H	H	ES	SI	S	C/NM	Y (4)	Y (5)
Tst C-V KAB30AA054	30KAB30AA259	30UJA11013	H	H	ES	SI	S	C/NM	Y (4)	Y (5)
Tst C-V KAB30AA054	30KAB30AA260	30UJA11014	H	H	ES	SI	S	C/NM	Y (4)	Y (5)
Tst C-V KAB30AA055	30KAB30AA263	30UJA11015	H	H	ES	SI	S	C/NM	Y (4)	Y (5)
Tst C-V KAB30AA055	30KAB30AA264	30UJA11015	H	H	ES	SI	S	C/NM	Y (4)	Y (5)
V F KAB30CF068	30KAB30AA301	30UJA11013	H	H	ES	SI	S	C/NM	Y (4)	Y (5)
V F KAB30CF068	30KAB30AA302	30UJA11013	H	H	ES	SI	S	C/NM	Y (4)	Y (5)
V F KAB30CF066	30KAB30AA303	30UJA18013	H	H	ES	SI	S	C/NM	Y (4)	Y (5)
V F KAB30CF066	30KAB30AA304	30UJA18013	H	H	ES	SI	S	C/NM	Y (4)	Y (5)
V F KAB30CF064	30KAB30AA305	30UJA18013	H	H	ES	SI	S	C/NM	Y (4)	Y (5)
V F KAB30CF064	30KAB30AA306	30UJA18013	H	H	ES	SI	S	C/NM	Y (4)	Y (5)
V F KAB30CF062	30KAB30AA307	30UJA18013	H	H	ES	SI	S	C/NM	Y (4)	Y (5)
V F KAB30CF062	30KAB30AA308	30UJA18013	H	H	ES	SI	S	C/NM	Y (4)	Y (5)
V F KAB30CF078	30KAB30AA309	30UJA11014	H	H	ES	SI	S	C/NM	Y (4)	Y (5)
V F KAB30CF078	30KAB30AA310	30UJA11014	H	H	ES	SI	S	C/NM	Y (4)	Y (5)
V F KAB30CF076	30KAB30AA311	30UJA18014	H	H	ES	SI	S	C/NM	Y (4)	Y (5)
V F KAB30CF076	30KAB30AA312	30UJA18014	H	H	ES	SI	S	C/NM	Y (4)	Y (5)
V F KAB30CF074	30KAB30AA313	30UJA18014	H	H	ES	SI	S	C/NM	Y (4)	Y (5)
V F KAB30CF074	30KAB30AA314	30UJA18014	H	H	ES	SI	S	C/NM	Y (4)	Y (5)
V F KAB30CF072	30KAB30AA315	30UJA18014	H	H	ES	SI	S	C/NM	Y (4)	Y (5)
V F KAB30CF072	30KAB30AA316	30UJA18014	H	H	ES	SI	S	C/NM	Y (4)	Y (5)

Table 3.10-1—List of Seismically and Dynamically Qualified Mechanical and Electrical Equipment (Sheet 82 of 197)

Name Tag (Equipment Description)	Tag Number	Local Area KKS ID (Room Location)	EQ Environment (Note 1)	Radiation Environment Zone (Note 2)	EQ Designated Function (Note 3)		Safety Class (Note 4)		EQ Program Designation (Note 5)	
V F KAB30CF088	30KAB30AA317	30UJA11015	H	H	ES	SI	S	C/NM	Y (4)	Y (5)
V F KAB30CF088	30KAB30AA318	30UJA11015	H	H	ES	SI	S	C/NM	Y (4)	Y (5)
V F KAB30CF086	30KAB30AA319	30UJA18015	H	H	ES	SI	S	C/NM	Y (4)	Y (5)
V F KAB30CF086	30KAB30AA320	30UJA18015	H	H	ES	SI	S	C/NM	Y (4)	Y (5)
V F KAB30CF084	30KAB30AA322	30UJA18015	H	H	ES	SI	S	C/NM	Y (4)	Y (5)
V F KAB30CF082	30KAB30AA323	30UJA18015	H	H	ES	SI	S	C/NM	Y (4)	Y (5)
V F KAB30CF082	30KAB30AA324	30UJA18015	H	H	ES	SI	S	C/NM	Y (4)	Y (5)
V F KAB30CF098	30KAB30AA325	30UJA11016	H	H	ES	SI	S	C/NM	Y (4)	Y (5)
V F KAB30CF098	30KAB30AA326	30UJA11016	H	H	ES	SI	S	C/NM	Y (4)	Y (5)
V F KAB30CF096	30KAB30AA327	30UJA18016	H	H	ES	SI	S	C/NM	Y (4)	Y (5)
V F KAB30CF096	30KAB30AA328	30UJA18016	H	H	ES	SI	S	C/NM	Y (4)	Y (5)
V F KAB30CF094	30KAB30AA329	30UJA18016	H	H	ES	SI	S	C/NM	Y (4)	Y (5)
V F KAB30CF094	30KAB30AA330	30UJA18016	H	H	ES	SI	S	C/NM	Y (4)	Y (5)
V F KAB30CF092	30KAB30AA331	30UJA18016	H	H	ES	SI	S	C/NM	Y (4)	Y (5)
V F KAB30CF092	30KAB30AA332	30UJA18016	H	H	ES	SI	S	C/NM	Y (4)	Y (5)
D-V Upstr Thbarr 1&2	30KAB30AA406	30UJA11014	H	H	ES	SI	S	C/NM	Y (4)	Y (5)
D-V Dnstr Thbarr 1&2	30KAB30AA407	30UJA11013	H	H	ES	SI	S	C/NM	Y (4)	Y (5)
D-V Upstr Thbarr 3&4	30KAB30AA408	30UJA11015	H	H	ES	SI	S	C/NM	Y (4)	Y (5)
D-V Dnstr Thbarr 3&4	30KAB30AA409	30UJA11015	H	H	ES	SI	S	C/NM	Y (4)	Y (5)
V-V Dnstr JEB10 AC002	30KAB30AA501	30UJA23002	H	H	ES	SI	S	C/NM	Y (4)	Y (5)
V-V RCP Upr Brg1	30KAB30AA502	30UJA23002	H	H	ES	SI	S	C/NM	Y (4)	Y (5)
V-V JEB20AC002	30KAB30AA503	30UJA23005	H	H	ES	SI	S	C/NM	Y (4)	Y (5)
V-V RCP Upr Brg2	30KAB30AA504	30UJA23005	H	H	ES	SI	S	C/NM	Y (4)	Y (5)
V-V JEB30AC002	30KAB30AA505	30UJA23006	H	H	ES	SI	S	C/NM	Y (4)	Y (5)
V-V RCP Upr Brg3	30KAB30AA506	30UJA23006	H	H	ES	SI	S	C/NM	Y (4)	Y (5)
V-V JEB40AC002	30KAB30AA507	30UJA23009	H	H	ES	SI	S	C/NM	Y (4)	Y (5)
V-V RCP Upr Brg4	30KAB30AA508	30UJA23009	H	H	ES	SI	S	C/NM	Y (4)	Y (5)
V-V RCP Upr Brg2	30KAB30AA509	30UJA23005	H	H	ES	SI	S	C/NM	Y (4)	Y (5)
V-V Dnstr Thbarr 4	30KAB30AA520	30UJA23006	H	H	ES	SI	S	C/NM	Y (4)	Y (5)
DP Retn M MCP1	30KAB30BP032	30UJA18002	H	H	ES	SI	S	C/NM	Y (4)	Y (5)
DP Retn M MCP2	30KAB30BP034	30UJA18005	H	H	ES	SI	S	C/NM	Y (4)	Y (5)
DP Retn M MCP3	30KAB30BP036	30UJA18006	H	H	ES	SI	S	C/NM	Y (4)	Y (5)
DP Retn M MCP4	30KAB30BP038	30UJA18009	H	H	ES	SI	S	C/NM	Y (4)	Y (5)

Table 3.10-1—List of Seismically and Dynamically Qualified Mechanical and Electrical Equipment (Sheet 83 of 197)

Name Tag (Equipment Description)	Tag Number	Local Area KKS ID (Room Location)	EQ Environment (Note 1)	Radiation Environment Zone (Note 2)	EQ Designated Function (Note 3)	Safety Class (Note 4)	EQ Program Designation (Note 5)
F Upr Brg MCP1	30KAB30CF062	30UJA23002	H	H	SI	S C/NM	Y (4) Y (5)
F M MCP1	30KAB30CF064	30UJA18002	H	H	SI	S C/NM	Y (4) Y (5)
F Dnr Brg MCP1	30KAB30CF066	30UJA18002	H	H	SI	S C/NM	Y (4) Y (5)
F Thml Barr1	30KAB30CF068	30UJA11013	H	H	SI	S C/NM	Y (4) Y (5)
F Upr Brg MCP2	30KAB30CF072	30UJA23005	H	H	SI	S C/NM	Y (4) Y (5)
F M MCP2	30KAB30CF074	30UJA18005	H	H	SI	S C/NM	Y (4) Y (5)
F Dnr Brg MCP2	30KAB30CF076	30UJA18005	H	H	SI	S C/NM	Y (4) Y (5)
F Thml Barr2	30KAB30CF078	30UJA11014	H	H	SI	S C/NM	Y (4) Y (5)
F Upr Brg MCP3	30KAB30CF082	30UJA23006	H	H	SI	S C/NM	Y (4) Y (5)
F M MCP3	30KAB30CF084	30UJA18006	H	H	SI	S C/NM	Y (4) Y (5)
F Dnr Brg MCP3	30KAB30CF086	30UJA18006	H	H	SI	S C/NM	Y (4) Y (5)
F Thml Barr3	30KAB30CF088	30UJA11015	H	H	SI	S C/NM	Y (4) Y (5)
F Upr Brg MCP4	30KAB30CF092	30UJA23009	H	H	SI	S C/NM	Y (4) Y (5)
F M MCP4	30KAB30CF094	30UJA18009	H	H	SI	S C/NM	Y (4) Y (5)
F Dnr Brg MCP4	30KAB30CF096	30UJA18009	H	H	SI	S C/NM	Y (4) Y (5)
F Thml Barr4	30KAB30CF098	30UJA11016	H	H	SI	S C/NM	Y (4) Y (5)
F Test Upr Brg MCP1	30KAB30CF261	30UJA23002	H	H	SI	S C/NM	Y (4) Y (5)
F Test M MCP1	30KAB30CF263	30UJA18002	H	H	SI	S C/NM	Y (4) Y (5)
F Test Dnr Brg MCP1	30KAB30CF265	30UJA18002	H	H	SI	S C/NM	Y (4) Y (5)
F Test Upr Brg MCP2	30KAB30CF271	30UJA23005	H	H	SI	S C/NM	Y (4) Y (5)
F Test M MCP2	30KAB30CF273	30UJA18005	H	H	SI	S C/NM	Y (4) Y (5)
F Test Dnr Brg MCP2	30KAB30CF275	30UJA18005	H	H	SI	S C/NM	Y (4) Y (5)
F Test Upr Brg MCP3	30KAB30CF281	30UJA23006	H	H	SI	S C/NM	Y (4) Y (5)
F Test M MCP3	30KAB30CF283	30UJA18006	H	H	SI	S C/NM	Y (4) Y (5)
F Test Dnr Brg MCP3	30KAB30CF285	30UJA18006	H	H	SI	S C/NM	Y (4) Y (5)
T Dnstr MCP1	30KAB30CT060	30UJA18013	H	H	SI	S C/NM	Y (4) Y (5)
T Thml Barr 1	30KAB30CT061	30UJA11013	H	H	SI	S C/NM	Y (4) Y (5)
T Dnstr MCP2	30KAB30CT070	30UJA18014	H	H	SI	S C/NM	Y (4) Y (5)
T Thml Barr 2	30KAB30CT071	30UJA11014	H	H	SI	S C/NM	Y (4) Y (5)
T Dnstr MCP3	30KAB30CT080	30UJA18015	H	H	SI	S C/NM	Y (4) Y (5)
T Thml Barr 3	30KAB30CT081	30UJA11015	H	H	SI	S C/NM	Y (4) Y (5)
T Dnstr MCP4	30KAB30CT090	30UJA18016	H	H	SI	S C/NM	Y (4) Y (5)
T Thml Barr 4	30KAB30CT091	30UJA15009	H	H	SI	S C/NM	Y (4) Y (5)

Table 3.10-1—List of Seismically and Dynamically Qualified Mechanical and Electrical Equipment (Sheet 84 of 197)

Name Tag (Equipment Description)	Tag Number	Local Area KKS ID (Room Location)	EQ Environment (Note 1)	Radiation Environment Zone (Note 2)	EQ Designated Function (Note 3)			Safety Class (Note 4)		EQ Program Designation (Note 5)		
CIV *KLA/KT* Users	30KAB40AA001	31UJH10004	M	H	ES	PAM	SI	S	C/NM	Y (3)		Y (5)
CIV CK-V Com 1B NC	30KAB40AA002	30UJA11014	H	H	ES		SI	S	C/NM		Y (4)	Y (5)
CIV *KLA/KT* Users	30KAB40AA006	31UJH10004	M	H	ES	PAM	SI	S	C/NM	Y (3)		Y (5)
CIV *KLA/KT* Users	30KAB40AA012	30UJA11014	H	H	ES	PAM	SI	S	C/NM		Y (4)	Y (5)
V Upstr KTA10 AC001	30KAB40AA023	30UJA11013	H	H	ES		SI	S	C/NM		Y (4)	Y (5)
V Dnstr KTA10 AC001	30KAB40AA025	30UJA11013	H	H	ES		SI	S	C/NM		Y (4)	Y (5)
V Upstr KLA61 AC001	30KAB40AA026	30UJA23013	H	H	ES		SI	S	C/NM		Y (4)	Y (5)
V Dnstr KLA61 AC001	30KAB40AA027	30UJA23013	H	H	ES		SI	S	C/NM		Y (4)	Y (5)
V Upstr KLA61 AC003	30KAB40AA028	30UJA23013	H	H	ES		SI	S	C/NM		Y (4)	Y (5)
V Dnstr KLA61 AC003	30KAB40AA029	30UJA23013	H	H	ES		SI	S	C/NM		Y (4)	Y (5)
V Upstr KLA63 AC001	30KAB40AA030	30UJA23016	H	H	ES		SI	S	C/NM		Y (4)	Y (5)
V Dnstr KLA63 AC001	30KAB40AA031	30UJA23016	H	H	ES		SI	S	C/NM		Y (4)	Y (5)
V Upstr KLA63 AC003	30KAB40AA032	30UJA23016	H	H	ES		SI	S	C/NM		Y (4)	Y (5)
V Dnstr KLA63 AC003	30KAB40AA033	30UJA23016	H	H	ES		SI	S	C/NM		Y (4)	Y (5)
RL-V RBVS Clr KLA61 AC001	30KAB40AA191	30UJA23013	H	H	ES		SI	S	C/NM		Y (4)	Y (5)
RL-V RBVS Clr KLA61 AC003	30KAB40AA192	30UJA23013	H	H	ES		SI	S	C/NM		Y (4)	Y (5)
RL-V NI DVS Clr KTA10 AC001	30KAB40AA193	30UJA07021	H	H	ES		SI	S	C/NM		Y (4)	Y (5)
RL-V Cont Return Com1B	30KAB40AA194	30UJA15014	H	H	ES		SI	S	C/NM		Y (4)	Y (5)
RL-V RBVS Clr KLA63 AC003	30KAB40AA195	30UJA23016	H	H	ES		SI	S	C/NM		Y (4)	Y (5)
RL-V RBVS Clr KLA63 AC001	30KAB40AA196	30UJA23016	H	H	ES		SI	S	C/NM		Y (4)	Y (5)
RL-V Cont Pen JMQ60 BQ114	30KAB40AA197	30UJA11014	H	H	ES		SI	S	C/NM		Y (4)	Y (5)
TST C-V KAB40AA002	30KAB40AA251	30UJA11014	H	H	ES		SI	S	C/NM		Y (4)	Y (5)
TST C-V KAB40AA002	30KAB40AA252	30UJA11014	H	H	ES		SI	S	C/NM		Y (4)	Y (5)
TST C-V KAB40AA012	30KAB40AA255	30UJA11014	H	H	ES		SI	S	C/NM		Y (4)	Y (5)
TST C-V KAB40AA012	30KAB40AA256	30UJA11014	H	H	ES		SI	S	C/NM		Y (4)	Y (5)
V F KAB40 CF058	30KAB40AA301	31UJH10004	M	H	ES		SI	S	C/NM	Y (3)		Y (5)
V F KAB40 CF058	30KAB40AA302	31UJH10004	M	H	ES		SI	S	C/NM	Y (3)		Y (5)
V F KAB40 CP271	30KAB40AA303	30UJA11013	H	H	ES		SI	S	C/NM		Y (4)	Y (5)
V F KAB40 CF252	30KAB40AA304	30UJA07016	H	H	ES		SI	S	C/NM		Y (4)	Y (5)
V F KAB40 CF252	30KAB40AA305	30UJA07016	H	H	ES		SI	S	C/NM		Y (4)	Y (5)
V F KAB40 CP272	30KAB40AA306	30UJA11013	H	H	ES		SI	S	C/NM		Y (4)	Y (5)
V F KAB40 CF055	30KAB40AA307	31UJH10004	M	H	ES		SI	S	C/NM	Y (3)		Y (5)
V F KAB40 CF055	30KAB40AA308	31UJH10004	M	H	ES		SI	S	C/NM	Y (3)		Y (5)

Table 3.10-1—List of Seismically and Dynamically Qualified Mechanical and Electrical Equipment (Sheet 85 of 197)

Name Tag (Equipment Description)	Tag Number	Local Area KKS ID (Room Location)	EQ Environment (Note 1)	Radiation Environment Zone (Note 2)	EQ Designated Function (Note 3)		Safety Class (Note 4)		EQ Program Designation (Note 5)	
D-V Sup Com1B NC	30KAB40AA401	30UJA11014	H	H	ES	SI	S	C/NM	Y (4)	Y (5)
D-V Sup Com1B NC	30KAB40AA402	30UJA11013	H	H	ES	SI	S	C/NM	Y (4)	Y (5)
D-V Reac Clnt CL	30KAB40AA403	30UJA07021	H	H	ES	SI	S	C/NM	Y (4)	Y (5)
D-V Ret Com1B NC	30KAB40AA404	30UJA11013	H	H	ES	SI	S	C/NM	Y (4)	Y (5)
D-V Ret Com1B NC	30KAB40AA405	30UJA11014	H	H	ES	SI	S	C/NM	Y (4)	Y (5)
D-V Cont Return Com1B	30KAB40AA406	30UJA15014	H	H	ES	SI	S	C/NM	Y (4)	Y (5)
D-V Sup Com1B NC	30KAB40AA407	31UJH10004	M	H	ES	SI	S	C/NM	Y (3)	Y (5)
D-V Retn Com1B NC	30KAB40AA408	31UJH10004	M	H	ES	SI	S	C/NM	Y (3)	Y (5)
V-V Sup Com1B NC	30KAB40AA501	31UJH10004	M	H	ES	SI	S	C/NM	Y (3)	Y (5)
V-V Retn Com1B NC	30KAB40AA502	31UJH10004	M	H	ES	SI	S	C/NM	Y (3)	Y (5)
DP Retn HVAC 12	30KAB40BP005	30UJA23013	H	H	ES	SI	S	C/NM	Y (4)	Y (5)
DP Retn HVAC 34	30KAB40BP006	30UJA23016	H	H	ES	SI	S	C/NM	Y (4)	Y (5)
DP Retn KTA HX	30KAB40BP007	30UJA11013	H	H	ES	SI	S	C/NM	Y (4)	Y (5)
F Dnstr RB NC Com1B	30KAB40CF055	31UJH10004	M	H		SI	S	C/NM	Y (3)	Y (5)
F Upstr RB NC Com1B	30KAB40CF058	31UJH10004	M	H		SI	S	C/NM	Y (3)	Y (5)
F Dnstr KTA HX	30KAB40CF252	30UJA07016	H	H		SI	S	C/NM	Y (4)	Y (5)
P Test Upstr KAB40 Users	30KAB40CP271	30UJA11013	H	H		SI	S	C/NM	Y (4)	Y (5)
P Test Dnstr KAB40 Users	30KAB40CP272	30UJA11013	H	H		SI	S	C/NM	Y (4)	Y (5)
T RB NC Com1B	30KAB40CT068	31UJH10004	M	H		SI	S	C/NM	Y (3)	Y (5)
T Dnstr HVAC 12	30KAB40CT070	30UJA23013	H	H		SI	S	C/NM	Y (4)	Y (5)
T Dnstr HVAC 34	30KAB40CT073	30UJA23016	H	H		SI	S	C/NM	Y (4)	Y (5)
T Dnstr KLA CL1	30KAB40CT264	30UJA23013	H	H		SI	S	C/NM	Y (4)	Y (5)
T Dnstr KLA CL2	30KAB40CT265	30UJA23013	H	H		SI	S	C/NM	Y (4)	Y (5)
T Dnstr KLA CL3	30KAB40CT266	30UJA23016	H	H		SI	S	C/NM	Y (4)	Y (5)
T Dnstr KLA CL4	30KAB40CT267	30UJA23016	H	H		SI	S	C/NM	Y (4)	Y (5)
V 1 Upstr *UKA/UKS*	30KAB50AA001	34UJH10004	M	H	ES	SI	S	C/NM	Y (3)	Y (5)
V Dnstr *UKA/UKS*	30KAB50AA004	34UJH10004	M	H	ES	SI	S	C/NM	Y (3)	Y (5)
V 2 Upstr *UKA/UKS*	30KAB50AA006	34UJH10004	M	H	ES	SI	S	C/NM	Y (3)	Y (5)
CK-V Rten Com 2B NC	30KAB50AA008	34UJH10004	M	H	ES	SI	S	C/NM	Y (3)	Y (5)
V F KAB50 CF050	30KAB50AA303	34UJH10004	M	H	ES	SI	S	C/NM	Y (3)	Y (5)
V F KAB50 CF050	30KAB50AA304	34UJH10004	M	H	ES	SI	S	C/NM	Y (3)	Y (5)
V F KAB50 CF054	30KAB50AA319	34UJH10004	M	H	ES	SI	S	C/NM	Y (3)	Y (5)
V F KAB50 CF054	30KAB50AA320	34UJH10004	M	H	ES	SI	S	C/NM	Y (3)	Y (5)

Table 3.10-1—List of Seismically and Dynamically Qualified Mechanical and Electrical Equipment (Sheet 86 of 197)

Name Tag (Equipment Description)	Tag Number	Local Area KKS ID (Room Location)	EQ Environment (Note 1)	Radiation Environment Zone (Note 2)	EQ Designated Function (Note 3)			Safety Class (Note 4)		EQ Program Designation (Note 5)		
D-V40 Sup Com2B	30KAB50AA401	34UJH10004	M	H	ES		SI	S	C/NM	Y (3)		Y (5)
D-V40 Retn Com2B	30KAB50AA402	34UJH10004	M	H			SI	S	C/NM	Y (3)		Y (5)
D-V40 Retn Com2B	30KAB50AA403	34UJH10004	M	H	ES		SI	S	C/NM	Y (3)		Y (5)
V-V40 Retn Com2B	30KAB50AA501	34UJH10004	M	H	ES		SI	S	C/NM	Y (3)		Y (5)
V-V40 Sup Com2B	30KAB50AA502	34UJH10004	M	H	ES		SI	S	C/NM	Y (3)		Y (5)
F Upstr NC Com2B	30KAB50CF050	34UJH10004	M	H			SI	S	C/NM	Y (3)		Y (5)
F Dnstr NC Com2B	30KAB50CF054	34UJH10004	M	H			SI	S	C/NM	Y (3)		Y (5)
CIV *KBA*, RCP 1 & 2	30KAB60AA013	31UJH10004	M	H	ES	PAM	SI	S	C/NM	Y (3)		Y (5)
ICI CK-V Com 1B	30KAB60AA014	30UJA11014	H	H	ES		SI	S	C/NM		Y (4)	Y (5)
V Upstr KBA11 AC001	30KAB60AA015	30UJA11013	H	H	ES		SI	S	C/NM		Y (4)	Y (5)
V Dnstr KBA11 AC001	30KAB60AA017	30UJA11013	H	H	ES		SI	S	C/NM		Y (4)	Y (5)
Civ *KBA*, RCP 1 & 2	30KAB60AA018	30UJA11013	H	H	ES	PAM	SI	S	C/NM		Y (4)	Y (5)
Civ *KBA*, RCP 1 & 2	30KAB60AA019	31UJH10004	M	H	ES	PAM	SI	S	C/NM	Y (3)		Y (5)
C-V KBA11 AC001	30KAB60AA116	30UJA11013	H	H	ES		SI	S	C/NM		Y (4)	Y (5)
RL-V CVCS HP Clr KBA11AC001	30KAB60AA191	30UJA11013	H	H	ES		SI	S	C/NM		Y (4)	Y (5)
RL-V Cont Pen JMQ60 BQ108	30KAB60AA196	30UJA11013	H	H	ES		SI	S	C/NM		Y (4)	Y (5)
Tst C-V KAB60AA014	30KAB60AA251	30UJA11014	H	H	ES		SI	S	C/NM		Y (4)	Y (5)
Tst C-V KAB60AA014	30KAB60AA252	30UJA11014	H	H	ES		SI	S	C/NM		Y (4)	Y (5)
Tst C-V KAB60AA018	30KAB60AA255	30UJA11013	H	H	ES		SI	S	C/NM		Y (4)	Y (5)
Tst C-V KAB60AA018	30KAB60AA256	30UJA11013	H	H	ES		SI	S	C/NM		Y (4)	Y (5)
V F KAB60 CF050	30KAB60AA301	30UJA07016	H	H	ES		SI	S	C/NM		Y (4)	Y (5)
V F KAB60 CF050	30KAB60AA302	30UJA07016	H	H	ES		SI	S	C/NM		Y (4)	Y (5)
V F KAB60 CF081	30KAB60AA303	31UJH10004	M	H	ES		SI	S	C/NM	Y (3)		Y (5)
V F KAB60 CF081	30KAB60AA304	31UJH10004	M	H	ES		SI	S	C/NM	Y (3)		Y (5)
D-V Sup CVCS HP1	30KAB60AA401	30UJA11013	H	H	ES		SI	S	C/NM		Y (4)	Y (5)
D-V Retn CVCS HP1	30KAB60AA402	30UJA11013	H	H	ES		SI	S	C/NM		Y (4)	Y (5)
D-V Retn Com1B C RB	30KAB60AA403	30UJA11013	H	H	ES		SI	S	C/NM		Y (4)	Y (5)
D-V Sup Com1B C RB	30KAB60AA405	30UJA11014	H	H	ES		SI	S	C/NM		Y (4)	Y (5)
D-V10 Sup Com1B C	30KAB60AA406	30UJA11014	H	H	ES		SI	S	C/NM		Y (4)	Y (5)
D-V10 Retn Com1B C	30KAB60AA407	31UJH10004	M	H	ES		SI	S	C/NM	Y (3)		Y (5)
V-V10 Retn Com1B C	30KAB60AA501	31UJH10004	M	H	ES		SI	S	C/NM	Y (3)		Y (5)
F Dnstr CVCS HP Cl1	30KAB60CF050	30UJA07016	H	H			SI	S	C/NM		Y (4)	Y (5)
F Class Com1B	30KAB60CF081	31UJH10004	M	H			SI	S	C/NM	Y (3)		Y (5)

Table 3.10-1—List of Seismically and Dynamically Qualified Mechanical and Electrical Equipment (Sheet 87 of 197)

Name Tag (Equipment Description)	Tag Number	Local Area KKS ID (Room Location)	EQ Environment (Note 1)	Radiation Environment Zone (Note 2)	EQ Designated Function (Note 3)			Safety Class (Note 4)		EQ Program Designation (Note 5)		
G Acty CCWS Inlet	30KAB60CR001	30UJA11013	H	H			SI	S	C/NM		Y (4)	Y (5)
G Acty CCWS Outlet	30KAB60CR002	30UJA11013	H	H			SI	S	C/NM		Y (4)	Y (5)
T Dnstr CVCS HP Cl1	30KAB60CT082	30UJA07016	H	H			SI	S	C/NM		Y (4)	Y (5)
Civ *KBA*, RCP 3 & 4	30KAB70AA013	34UJH10004	M	H	ES	PAM	SI	S	C/NM	Y (3)		Y (5)
ICI CK-V Com 2B	30KAB70AA014	30UJA11015	H	H	ES		SI	S	C/NM		Y (4)	Y (5)
V Upstr KBA12 AC001	30KAB70AA015	30UJA11016	H	H	ES		SI	S	C/NM		Y (4)	Y (5)
V Dnstr KBA12 AC001	30KAB70AA017	30UJA11016	H	H	ES		SI	S	C/NM		Y (4)	Y (5)
Civ *KBA*, RCP 3 & 4	30KAB70AA018	30UJA11016	H	H	ES	PAM	SI	S	C/NM		Y (4)	Y (5)
Civ *KBA*, RCP 3 & 4	30KAB70AA019	34UJH10004	M	H	ES	PAM	SI	S	C/NM	Y (3)		Y (5)
C-V KBA12 AC001	30KAB70AA116	30UJA11016	H	H	ES		SI	S	C/NM		Y (4)	Y (5)
RL-V CVCS HP Clr KBA12AC001	30KAB70AA191	30UJA11016	H	H	ES		SI	S	C/NM		Y (4)	Y (5)
RL-V Cont Pen JMQ60 BQ408	30KAB70AA194	30UJA11016	H	H	ES		SI	S	C/NM		Y (4)	Y (5)
TST C-V KAB70AA014	30KAB70AA251	30UJA11015	H	H	ES		SI	S	C/NM		Y (4)	Y (5)
TST C-V KAB70AA014	30KAB70AA252	30UJA11015	H	H	ES		SI	S	C/NM		Y (4)	Y (5)
TST C-V KAB70AA018	30KAB70AA255	30UJA11016	H	H	ES		SI	S	C/NM		Y (4)	Y (5)
TST C-V KAB70AA018	30KAB70AA256	30UJA11016	H	H	ES		SI	S	C/NM		Y (4)	Y (5)
V F KAB70 CF050	30KAB70AA301	30UJA07016	H	H	ES		SI	S	C/NM		Y (4)	Y (5)
V F KAB70 CF050	30KAB70AA302	30UJA07016	H	H	ES		SI	S	C/NM		Y (4)	Y (5)
V F KAB70 CF081	30KAB70AA303	34UJH10004	M	H	ES		SI	S	C/NM	Y (3)		Y (5)
V F KAB70 CF081	30KAB70AA304	34UJH10004	M	H	ES		SI	S	C/NM	Y (3)		Y (5)
D-V Sup Com2B C	30KAB70AA401	30UJA11015	H	H	ES		SI	S	C/NM		Y (4)	Y (5)
D-V Retn CVCS HP2	30KAB70AA403	30UJA11016	H	H	ES		SI	S	C/NM		Y (4)	Y (5)
D-V Ret Com2B C	30KAB70AA404	30UJA11016	H	H	ES		SI	S	C/NM		Y (4)	Y (5)
D-V Retn Com1B Orb	30KAB70AA405	34UJH10004	M	H	ES		SI	S	C/NM	Y (3)		Y (5)
D-V40 Sup Com1B C	30KAB70AA406	34UJH10004	M	H	ES		SI	S	C/NM	Y (3)		Y (5)
V-V40 Retn Com1B C	30KAB70AA501	34UJH10004	M	H	ES		SI	S	C/NM	Y (3)		Y (5)
V-V40 Retn Com1B IC	30KAB70AA502	34UJH10004	M	H	ES		SI	S	C/NM	Y (3)		Y (5)
F Dnstr CVCS HP Cl2	30KAB70CF050	30UJA11016	H	H			SI	S	C/NM		Y (4)	Y (5)
F Class Com2B	30KAB70CF081	34UJH10004	M	H			SI	S	C/NM	Y (3)		Y (5)
G Acty CCWS Inlet	30KAB70CR001	30UJA11016	H	H			SI	S	C/NM		Y (4)	Y (5)
G Acty CCWS Outlet	30KAB70CR002	30UJA11016	H	H			SI	S	C/NM		Y (4)	Y (5)
T Dnstr CVCS HP Cl2	30KAB70CT082	30UJA11016	H	H			SI	S	C/NM		Y (4)	Y (5)
V 1 Upstr *QN* Users	30KAB80AA015	31UJH10004	M	H	ES		SI	S	C/NM	Y (3)		Y (5)

Table 3.10-1—List of Seismically and Dynamically Qualified Mechanical and Electrical Equipment (Sheet 88 of 197)

Name Tag (Equipment Description)	Tag Number	Local Area KKS ID (Room Location)	EQ Environment (Note 1)	Radiation Environment Zone (Note 2)	EQ Designated Function (Note 3)		Safety Class (Note 4)			EQ Program Designation (Note 5)	
V 2 Upstr *QN* Users	30KAB80AA016	31UJH10004	M	H	ES	SI	S		C/NM	Y (3)	Y (5)
V Dnstr *QN* Users	30KAB80AA019	31UJH10004	M	H	ES	SI	S		C/NM	Y (3)	Y (5)
CK-V Rten Com 1B NC	30KAB80AA020	31UJH10004	M	H	ES	SI	S		C/NM	Y (3)	Y (5)
V F KAB80 CF060	30KAB80AA314	31UJH10004	M	H	ES	SI	S		C/NM	Y (3)	Y (5)
V F KAB80 CF060	30KAB80AA315	31UJH10004	M	H	ES	SI	S		C/NM	Y (3)	Y (5)
V F KAB80 CF061	30KAB80AA316	31UJH10004	M	H	ES	SI	S		C/NM	Y (3)	Y (5)
V F KAB80 CF061	30KAB80AA317	31UJH10004	M	H	ES	SI	S		C/NM	Y (3)	Y (5)
D-V Sup Com1B NC	30KAB80AA403	31UJH10004	M	H	ES	SI	S		C/NM	Y (3)	Y (5)
D-V Retn Com1B NC	30KAB80AA406	31UJH10004	M	H	ES	SI	S		C/NM	Y (3)	Y (5)
D-V Retn Com1B NC	30KAB80AA407	31UJH10004	M	H	ES	SI	S		C/NM	Y (3)	Y (5)
V-V Sup Com1B NC	30KAB80AA501	31UJH10004	M	H	ES	SI	S		C/NM	Y (3)	Y (5)
V-V Retn Com1B NC	30KAB80AA504	31UJH10004	M	H	ES	SI	S		C/NM	Y (3)	Y (5)
F Upstr QNA21 AC002	30KAB80CF060	31UJH10004	M	H		SI	S		C/NM	Y (3)	Y (5)
F Dnstr KAB80 Chil	30KAB80CF061	31UJH10004	M	H		SI	S		C/NM	Y (3)	Y (5)
Essential Service Water System (ESWS)											
Isolation Upstream KAA10 AC001	30PEB10AA027	31UJH05026	M	H	ES	SI	S	SI	C/NM	Y(3)	Y(5)
Isolation Downstream KAA10 AC001	30PEB10AA029	31UJH05026	M	H	ES	SI	S	SI	C/NM	Y(3)	Y(5)
Isolation Upstream KAA20 AC001	30PEB20AA027	32UJH05020	M	H	ES	SI	S	SI	C/NM	Y(3)	Y(5)
Isolation Downstream KAA20 AC001	30PEB20AA029	32UJH05020	M	H	ES	SI	S	SI	C/NM	Y(3)	Y(5)
Isolation Upstream KAA30 AC001	30PEB30AA027	33UJH05020	M	H	ES	SI	S	SI	C/NM	Y(3)	Y(5)
Isolation Downstream KAA30 AC001	30PEB30AA029	33UJH05020	M	H	ES	SI	S	SI	C/NM	Y(3)	Y(5)
Isolation Upstream KAA40 AC001	30PEB40AA027	34UJH05026	M	H	ES	SI	S	SI	C/NM	Y(3)	Y(5)
Isolation Downstream KAA40 AC001	30PEB40AA029	34UJH05026	M	H	ES	SI	S	SI	C/NM	Y(3)	Y(5)
ESW Sample Isolation	30PEB10AA601	33UJH05020	M	H	ES	SI	S	SI	C/NM	Y(3)	Y(5)
ESW Sample Isolation	30PEB20AA601	34UJH05026	M	H	ES	SI	S	SI	C/NM	Y(3)	Y(5)
ESW Sample Isolation	30PEB30AA601	34UJH05026	M	H	ES	SI	S	SI	C/NM	Y(3)	Y(5)

Table 3.10-1—List of Seismically and Dynamically Qualified Mechanical and Electrical Equipment (Sheet 89 of 197)

Name Tag (Equipment Description)	Tag Number	Local Area KKS ID (Room Location)	EQ Environment (Note 1)	Radiation Environment Zone (Note 2)	EQ Designated Function (Note 3)		Safety Class (Note 4)			EQ Program Designation (Note 5)	
ESW Sample Isolation	30PEB40AA601	33UJH05020	M	H	ES	SI	S	SI	C/NM	Y(3)	Y(5)
UHS Tower Keep-Fill Isolation Valve	30PED10AA024	31UQB02001	M	M	ES	SI	S	SI	C/NM		Y (5)
UHS Tower Keep-Fill Isolation Valve	30PED20AA024	32UQB02001	M	M	ES	SI	S	SI	C/NM		Y (5)
UHS Tower Keep-Fill Isolation Valve	30PED30AA024	33UQB02001	M	M	ES	SI	S	SI	C/NM		Y (5)
UHS Tower Keep-Fill Isolation Valve	30PED40AA024	34UQB02001	M	M	ES	SI	S	SI	C/NM		Y (5)
UHS Tower Keep-Fill Check Valve	30PED10AA025	31UQB02001	M	M	ES	SI	S	SI	C/NM		Y (5)
UHS Tower Keep-Fill Check Valve	30PED20AA025	32UQB02001	M	M	ES	SI	S	SI	C/NM		Y (5)
UHS Tower Keep-Fill Check Valve	30PED30AA025	33UQB02001	M	M	ES	SI	S	SI	C/NM		Y (5)
UHS Tower Keep-Fill Check Valve	30PED40AA025	34UQB02001	M	M	ES	SI	S	SI	C/NM		Y (5)
ESW Debris Filter	30PEB10AT002	31UQB02001	M	M	ES	SI	S		C/NM		Y (5)
ESW Debris Filter	30PEB20AT002	32UQB02001	M	M	ES	SI	S		C/NM		Y (5)
ESW Debris Filter	30PEB30AT002	33UQB02001	M	M	ES	SI	S		C/NM		Y (5)
ESW Debris Filter	30PEB40AT002	34UQB02001	M	M	ES	SI	S		C/NM		Y (5)
CCW HX Inlet Isolation Vlv	30PEB10AA007	31UJH05026	M	H		SI	S		C/NM	Y (3)	Y (5)
CCW HX Outlet Isolation Vlv	30PEB10AA009	31UJH05026	M	H		SI	S		C/NM	Y (3)	Y (5)
CCW HX Tube Side Thermal Relief Vlv	30PEB10AA192	31UJH05026	M	H		SI	S		C/NM	Y (3)	Y (5)
CCW HX Inlet Side DP Root Vlv	30PEB10AA306	31UJH10026	M	H		SI	S		C/NM	Y (3)	Y (5)
CCW HX Outlet Side DP Root Vlv	30PEB10AA307	31UJH10026	M	H		SI	S		C/NM	Y (3)	Y (5)
ESW Drain Isolation Vlv	30PEB10AA401	31UJH01026	M	H		SI	S		C/NM	Y (3)	Y (5)
ESW Drain Isolation Vlv	30PEB10AA402	31UJH10026	M	H		SI	S		C/NM	Y (3)	Y (5)
ESW Drain Isolation Vlv	30PEB10AA403	31UJH01026	M	H		SI	S		C/NM	Y (3)	Y (5)
ESW Drain Isolation Vlv	30PEB10AA405	31UJH01026	M	H		SI	S		C/NM	Y (3)	Y (5)
ESW Drain Isolation Vlv	30PEB10AA407	31UJH01026	M	H		SI	S		C/NM	Y (3)	Y (5)
ESW Drain Isolation Vlv	30PEB10AA408	31UJH01026	M	H		SI	S		C/NM	Y (3)	Y (5)
CCW HX Tube Side Vent Vlv	30PEB10AA508	31UJH10026	M	H		SI	S		C/NM	Y (3)	Y (5)
CCW HX Tube Side Vent Vlv	30PEB10AA509	31UJH10026	M	H		SI	S		C/NM	Y (3)	Y (5)
Orifice Plate	30PEB10BP002	31UJH05026	M	H		SI	S		C/NM	Y (3)	Y (5)
CCW HX DP Measurement	30PEB10CP004	31UJH05026	M	H		SI	S				Y (5)
CCW HX Outlet Temp Measurement	30PEB10CT002	31UJH05026	M	H		SI	S				Y (5)
SAQ HX DP Measurement	30PEB11CP001	31UQB02001	M	M		SI	S				Y (5)
SAQ HX Outlet Temp Measurement	30PEB11CT001	31UQB02001	M	M		SI	S				Y (5)
CCW HX Inlet Isolation Vlv	30PEB20AA007	32UJH05020	M	H		SI	S		C/NM	Y (3)	Y (5)
CCW HX Outlet Isolation Vlv	30PEB20AA009	32UJH05020	M	H		SI	S		C/NM	Y (3)	Y (5)

Table 3.10-1—List of Seismically and Dynamically Qualified Mechanical and Electrical Equipment (Sheet 90 of 197)

Name Tag (Equipment Description)	Tag Number	Local Area KKS ID (Room Location)	EQ Environment (Note 1)	Radiation Environment Zone (Note 2)	EQ Designated Function (Note 3)	Safety Class (Note 4)		EQ Program Designation (Note 5)	
CCW HX Tube Side Thermal Relief Vlv	30PEB20AA192	32UJH05020	M	H	SI	S	C/NM	Y (3)	Y (5)
CCW HX Inlet Side DP Root Vlv	30PEB20AA306	32UJH10020	M	H	SI	S	C/NM	Y (3)	Y (5)
CCW HX Outlet Side DP Root Vlv	30PEB20AA307	32UJH10020	M	H	SI	S	C/NM	Y (3)	Y (5)
ESW Drain Isolation Vlv	30PEB20AA401	32UJH01020	M	H	SI	S	C/NM	Y (3)	Y (5)
ESW Drain Isolation Vlv	30PEB20AA402	32UJH10020	M	H	SI	S	C/NM	Y (3)	Y (5)
ESW Drain Isolation Vlv	30PEB20AA403	32UJH01020	M	H	SI	S	C/NM	Y (3)	Y (5)
ESW Drain Isolation Vlv	30PEB20AA405	32UJH01020	M	H	SI	S	C/NM	Y (3)	Y (5)
ESW Drain Isolation Vlv	30PEB20AA407	32UJH05020	M	H	SI	S	C/NM	Y (3)	Y (5)
ESW Drain Isolation Vlv	30PEB20AA408	32UJH01020	M	H	SI	S	C/NM	Y (3)	Y (5)
CCW HX Tube Side Vent Vlv	30PEB20AA508	32UJH10020	M	H	SI	S	C/NM	Y (3)	Y (5)
CCW HX Tube Side Vent Vlv	30PEB20AA509	32UJH10020	M	H	SI	S	C/NM	Y (3)	Y (5)
Orifice Plate	30PEB20BP002	32UJH05020	M	H	SI	S	C/NM	Y (3)	Y (5)
CCW HX DP Measurement	30PEB20CP004	32UJH05020	M	H	SI	S			Y (5)
CCW HX Outlet Temp Measurement	30PEB20CT002	32UJH05020	M	H	SI	S			Y (5)
EDG HXs Inlet Isolation Vlv	30PEB21AA001	31UBP01001	M	M	SI	S	C/NM		Y (5)
EDG HXs Outlet Isolation Vlv	30PEB21AA002	31UBP01001	M	M	SI	S	C/NM		Y (5)
EDG Water Jacket HX Air Release Vlv	30PEB21AA195	31UBP01001	M	M	SI	S	C/NM		Y (5)
EDG HX Tube Side Thermal Relief Vlv	30PEB21AA196	31UBP01001	M	M	SI	S	C/NM		Y (5)
ESW Pressure Measurement Root Vlv	30PEB21AA301	31UBP01001	M	M	SI	S	C/NM		Y (5)
ESW Pressure Measurement Root Vlv	30PEB21AA302	31UBP01001	M	M	SI	S	C/NM		Y (5)
ESW Pressure Measurement Root Vlv	30PEB21AA303	31UBP01001	M	M	SI	S	C/NM		Y (5)
ESW Pressure Measurement Root Vlv	30PEB21AA304	31UBP01001	M	M	SI	S	C/NM		Y (5)
ESW Drain Isolation Vlv	30PEB21AA401	31UBP01001	M	M	SI	S	C/NM		Y (5)
ESW Drain Isolation Vlv	30PEB21AA402	31UBP01001	M	M	SI	S	C/NM		Y (5)
ESW Drain Isolation Vlv	30PEB21AA403	31UBP01001	M	M	SI	S	C/NM		Y (5)
ESW Drain Isolation Vlv	30PEB21AA404	31UBP01001	M	M	SI	S	C/NM		Y (5)
EDG HX Tube Side Vent Vlv	30PEB21AA501	31UBP01001	M	M	SI	S	C/NM		Y (5)
EDG HX Tube Side Vent Vlv	30PEB21AA502	31UBP01001	M	M	SI	S	C/NM		Y (5)
EDG HX Tube Side Vent Vlv	30PEB21AA503	31UBP01001	M	M	SI	S	C/NM		Y (5)
Orifice Plate	30PEB21BP003	31UBP01001	M	M	SI	S	C/NM		Y (5)
EDG HXs Outlet Flow Measurement	30PEB21CF001	31UBP01001	M	M	ES SI	S			Y (5)
SAQ HX DP Measurement	30PEB21CP001	32UQB02001	M	M	SI	S			Y (5)
ESW Pressure Measurement	30PEB21CP201	31UBP01001	M	M	SI	S			Y (5)

Table 3.10-1—List of Seismically and Dynamically Qualified Mechanical and Electrical Equipment (Sheet 91 of 197)

Name Tag (Equipment Description)	Tag Number	Local Area KKS ID (Room Location)	EQ Environment (Note 1)	Radiation Environment Zone (Note 2)	EQ Designated Function (Note 3)	Safety Class (Note 4)		EQ Program Designation (Note 5)
ESW Pressure Measurement	30PEB21CP202	31UBP01001	M	M	SI	S		Y (5)
ESW Pressure Measurement	30PEB21CP203	31UBP01001	M	M	SI	S		Y (5)
ESW Pressure Measurement	30PEB21CP204	31UBP01001	M	M	SI	S		Y (5)
SAQ HX Outlet Temp Measurement	30PEB21CT001	32UQB02001	M	M	SI	S		Y (5)
EDG HX Outlet Temp Measurement	30PEB21CT201	31UBP01001	M	M	SI	S		Y (5)
EDG HX Outlet Temp Measurement	30PEB21CT202	31UBP01001	M	M	SI	S		Y (5)
EDG HX Outlet Temp Measurement	30PEB21CT203	31UBP01001	M	M	SI	S		Y (5)
EDG HXs Inlet Isolation Vlv	30PEB22AA001	32UBP01001	M	M	SI	S	C/NM	Y (5)
EDG HXs Outlet Isolation Vlv	30PEB22AA002	32UBP01001	M	M	SI	S	C/NM	Y (5)
EDG Water Jacket HX Air Release Vlv	30PEB22AA195	32UBP01001	M	M	SI	S	C/NM	Y (5)
EDG HX Tube Side Thermal Relief Vlv	30PEB22AA196	32UBP01001	M	M	SI	S	C/NM	Y (5)
ESW Pressure Measurement Root Vlv	30PEB22AA301	32UBP01001	M	M	SI	S	C/NM	Y (5)
ESW Pressure Measurement Root Vlv	30PEB22AA302	32UBP01001	M	M	SI	S	C/NM	Y (5)
ESW Pressure Measurement Root Vlv	30PEB22AA303	32UBP01001	M	M	SI	S	C/NM	Y (5)
ESW Pressure Measurement Root Vlv	30PEB22AA304	32UBP01001	M	M	SI	S	C/NM	Y (5)
ESW Drain Isolation Vlv	30PEB22AA401	32UBP01001	M	M	SI	S	C/NM	Y (5)
ESW Drain Isolation Vlv	30PEB22AA402	32UBP01001	M	M	SI	S	C/NM	Y (5)
ESW Drain Isolation Vlv	30PEB22AA403	32UBP01001	M	M	SI	S	C/NM	Y (5)
ESW Drain Isolation Vlv	30PEB22AA404	32UBP01001	M	M	SI	S	C/NM	Y (5)
EDG HX Tube Side Vent Vlv	30PEB22AA501	32UBP01001	M	M	SI	S	C/NM	Y (5)
EDG HX Tube Side Vent Vlv	30PEB22AA502	32UBP01001	M	M	SI	S	C/NM	Y (5)
EDG HX Tube Side Vent Vlv	30PEB22AA503	32UBP01001	M	M	SI	S	C/NM	Y (5)
Orifice Plate	30PEB22BP003	32UBP01001	M	M	SI	S	C/NM	Y (5)
EDG HXs Outlet Flow Measurement	30PEB22CF001	32UBP01001	M	M	ES SI	S		Y (5)
ESW Pressure Measurement	30PEB22CP201	32UBP01001	M	M	SI	S		Y (5)
ESW Pressure Measurement	30PEB22CP202	32UBP01001	M	M	SI	S		Y (5)
ESW Pressure Measurement	30PEB22CP203	32UBP01001	M	M	SI	S		Y (5)
ESW Pressure Measurement	30PEB22CP204	32UBP01001	M	M	SI	S		Y (5)
EDG HX Outlet Temp Measurement	30PEB22CT201	32UBP01001	M	M	SI	S		Y (5)
EDG HX Outlet Temp Measurement	30PEB22CT202	32UBP01001	M	M	SI	S		Y (5)
EDG HX Outlet Temp Measurement	30PEB22CT203	32UBP01001	M	M	SI	S		Y (5)
EDG HXs Inlet Isolation Vlv	30PEB23AA001	33UBP01001	M	M	SI	S	C/NM	Y (5)
EDG HXs Outlet Isolation Vlv	30PEB23AA002	33UBP01001	M	M	SI	S	C/NM	Y (5)

Table 3.10-1—List of Seismically and Dynamically Qualified Mechanical and Electrical Equipment (Sheet 92 of 197)

Name Tag (Equipment Description)	Tag Number	Local Area KKS ID (Room Location)	EQ Environment (Note 1)	Radiation Environment Zone (Note 2)	EQ Designated Function (Note 3)	Safety Class (Note 4)	EQ Program Designation (Note 5)
EDG Water Jacket HX Air Release Vlv	30PEB23AA195	33UBP01001	M	M	SI	S C/NM	Y (5)
EDG HX Tube Side Thermal Relief Vlv	30PEB23AA196	33UBP01001	M	M	SI	S C/NM	Y (5)
ESW Pressure Measurement Root Vlv	30PEB23AA301	33UBP01001	M	M	SI	S C/NM	Y (5)
ESW Pressure Measurement Root Vlv	30PEB23AA302	33UBP01001	M	M	SI	S C/NM	Y (5)
ESW Pressure Measurement Root Vlv	30PEB23AA303	33UBP01001	M	M	SI	S C/NM	Y (5)
ESW Pressure Measurement Root Vlv	30PEB23AA304	33UBP01001	M	M	SI	S C/NM	Y (5)
ESW Drain Isolation Vlv	30PEB23AA401	33UBP01001	M	M	SI	S C/NM	Y (5)
ESW Drain Isolation Vlv	30PEB23AA402	33UBP01001	M	M	SI	S C/NM	Y (5)
ESW Drain Isolation Vlv	30PEB23AA403	33UBP01001	M	M	SI	S C/NM	Y (5)
ESW Drain Isolation Vlv	30PEB23AA404	33UBP01001	M	M	SI	S C/NM	Y (5)
EDG HX Tube Side Vent Vlv	30PEB23AA501	33UBP01001	M	M	SI	S C/NM	Y (5)
EDG HX Tube Side Vent Vlv	30PEB23AA502	33UBP01001	M	M	SI	S C/NM	Y (5)
EDG HX Tube Side Vent Vlv	30PEB23AA503	33UBP01001	M	M	SI	S C/NM	Y (5)
Orifice Plate	30PEB23BP003	33UBP01001	M	M	SI	S C/NM	Y (5)
EDG HXs Outlet Flow Measurement	30PEB23CF001	33UBP01001	M	M	ES SI	S	Y (5)
ESW Pressure Measurement	30PEB23CP201	33UBP01001	M	M	SI	S	Y (5)
ESW Pressure Measurement	30PEB23CP202	33UBP01001	M	M	SI	S	Y (5)
ESW Pressure Measurement	30PEB23CP203	33UBP01001	M	M	SI	S	Y (5)
ESW Pressure Measurement	30PEB23CP204	33UBP01001	M	M	SI	S	Y (5)
EDG HX Outlet Temp Measurement	30PEB23CT201	33UBP01001	M	M	SI	S	Y (5)
EDG HX Outlet Temp Measurement	30PEB23CT202	33UBP01001	M	M	SI	S	Y (5)
EDG HX Outlet Temp Measurement	30PEB23CT203	33UBP01001	M	M	SI	S	Y (5)
EDG HXs Inlet Isolation Vlv	30PEB24AA001	34UBP01001	M	M	SI	S C/NM	Y (5)
EDG HXs Outlet Isolation Vlv	30PEB24AA002	34UBP01001	M	M	SI	S C/NM	Y (5)
EDG Water Jacket HX Air Release Vlv	30PEB24AA195	34UBP01001	M	M	SI	S C/NM	Y (5)
EDG HX Tube Side Thermal Relief Vlv	30PEB24AA196	34UBP01001	M	M	SI	S C/NM	Y (5)
ESW Pressure Measurement Root Vlv	30PEB24AA301	34UBP01001	M	M	SI	S C/NM	Y (5)
ESW Pressure Measurement Root Vlv	30PEB24AA302	34UBP01001	M	M	SI	S C/NM	Y (5)
ESW Pressure Measurement Root Vlv	30PEB24AA303	34UBP01001	M	M	SI	S C/NM	Y (5)
ESW Pressure Measurement Root Vlv	30PEB24AA304	34UBP01001	M	M	SI	S C/NM	Y (5)
ESW Drain Isolation Vlv	30PEB24AA401	34UBP01001	M	M	SI	S C/NM	Y (5)
ESW Drain Isolation Vlv	30PEB24AA402	34UBP01001	M	M	SI	S C/NM	Y (5)
ESW Drain Isolation Vlv	30PEB24AA403	34UBP01001	M	M	SI	S C/NM	Y (5)

Table 3.10-1—List of Seismically and Dynamically Qualified Mechanical and Electrical Equipment (Sheet 93 of 197)

Name Tag (Equipment Description)	Tag Number	Local Area KKS ID (Room Location)	EQ Environment (Note 1)	Radiation Environment Zone (Note 2)	EQ Designated Function (Note 3)		Safety Class (Note 4)			EQ Program Designation (Note 5)	
ESW Drain Isolation Vlv	30PEB24AA404	34UBP01001	M	M		SI	S		C/NM		Y (5)
EDG HX Tube Side Vent Vlv	30PEB24AA501	34UBP01001	M	M		SI	S		C/NM		Y (5)
EDG HX Tube Side Vent Vlv	30PEB24AA502	34UBP01001	M	M		SI	S		C/NM		Y (5)
EDG HX Tube Side Vent Vlv	30PEB24AA503	34UBP01001	M	M		SI	S		C/NM		Y (5)
Orifice Plate	30PEB24BP003	34UBP01001	M	M		SI	S		C/NM		Y (5)
EDG HXs Outlet Flow Measurement	30PEB24CF001	34UBP01001	M	M	ES	SI	S				Y (5)
ESW Pressure Measurement	30PEB24CP201	34UBP01001	M	M		SI	S				Y (5)
ESW Pressure Measurement	30PEB24CP202	34UBP01001	M	M		SI	S				Y (5)
ESW Pressure Measurement	30PEB24CP203	34UBP01001	M	M		SI	S				Y (5)
ESW Pressure Measurement	30PEB24CP204	34UBP01001	M	M		SI	S				Y (5)
EDG HX Outlet Temp Measurement	30PEB24CT201	34UBP01001	M	M		SI	S				Y (5)
EDG HX Outlet Temp Measurement	30PEB24CT202	34UBP01001	M	M		SI	S				Y (5)
EDG HX Outlet Temp Measurement	30PEB24CT203	34UBP01001	M	M		SI	S				Y (5)
CCW HX Inlet Isolation Vlv	30PEB30AA007	33UJH05020	M	H		SI	S		C/NM	Y (3)	Y (5)
CCW HX Outlet Isolation Vlv	30PEB30AA009	33UJH05020	M	H		SI	S		C/NM	Y (3)	Y (5)
CCW HX Tube Side Thermal Relief Vlv	30PEB30AA192	33UJH05020	M	H		SI	S		C/NM	Y (3)	Y (5)
CCW HX Inlet Side DP Root Vlv	30PEB30AA306	33UJH10020	M	H		SI	S		C/NM	Y (3)	Y (5)
CCW HX Outlet Side DP Root Vlv	30PEB30AA307	33UJH10020	M	H		SI	S		C/NM	Y (3)	Y (5)
ESW Drain Isolation Vlv	30PEB30AA401	33UJH01038	M	H		SI	S		C/NM	Y (3)	Y (5)
ESW Drain Isolation Vlv	30PEB30AA402	33UJH10020	M	H		SI	S		C/NM	Y (3)	Y (5)
ESW Drain Isolation Vlv	30PEB30AA403	33UJH05020	M	H		SI	S		C/NM	Y (3)	Y (5)
ESW Drain Isolation Vlv	30PEB30AA405	33UJH05020	M	H		SI	S		C/NM	Y (3)	Y (5)
ESW Drain Isolation Vlv	30PEB30AA407	33UJH01020	M	H		SI	S		C/NM	Y (3)	Y (5)
ESW Drain Isolation Vlv	30PEB30AA408	33UJH01038	M	H		SI	S		C/NM	Y (3)	Y (5)
CCW HX Tube Side Vent Vlv	30PEB30AA508	33UJH10020	M	H		SI	S		C/NM	Y (3)	Y (5)
CCW HX Tube Side Vent Vlv	30PEB30AA509	33UJH10020	M	H		SI	S		C/NM	Y (3)	Y (5)
Orifice Plate	30PEB30BP002	33UJH05020	M	H		SI	S		C/NM	Y (3)	Y (5)
CCW HX DP Measurement	30PEB30CP004	33UJH05020	M	H		SI	S				Y (5)
CCW HX Outlet Temp Measurement	30PEB30CT002	33UJH05020	M	H		SI	S				Y (5)
Filter Emergency Blowdown Isolation Valve	30PEB10AA004	31UQB2001	M	M	ES	SI	S	SI	C/NM		Y (5)
Filter Emergency Blowdown Isolation Valve	30PEB20AA004	32UQB2001	M	M	ES	SI	S	SI	C/NM		Y (5)
Filter Emergency Blowdown Isolation Valve	30PEB30AA004	33UQB2001	M	M	ES	SI	S	SI	C/NM		Y (5)
Filter Emergency Blowdown Isolation Valve	30PEB40AA004	34UQB2001	M	M	ES	SI	S	SI	C/NM		Y (5)

Table 3.10-1—List of Seismically and Dynamically Qualified Mechanical and Electrical Equipment (Sheet 94 of 197)

Name Tag (Equipment Description)	Tag Number	Local Area KKS ID (Room Location)	EQ Environment (Note 1)	Radiation Environment Zone (Note 2)	EQ Designated Function (Note 3)	Safety Class (Note 4)	EQ Program Designation (Note 5)
SAQ HX DP Measurement	30PEB31CP001	33UQB02001	M	M	SI	S	Y (5)
SAQ HX Outlet Temp Measurement	30PEB31CT001	33UQB02001	M	M	SI	S	Y (5)
CCW HX Inlet Isolation Vlv	30PEB40AA007	34UJH05026	M	H	SI	S C/NM	Y (3) Y (5)
CCW HX Outlet Isolation Vlv	30PEB40AA009	34UJH05026	M	H	SI	S C/NM	Y (3) Y (5)
CCW HX Tube Side Thermal Relief Vlv	30PEB40AA192	34UJH05026	M	H	SI	S C/NM	Y (3) Y (5)
CCW HX Inlet Side DP Root Vlv	30PEB40AA306	34UJH10026	M	H	SI	S C/NM	Y (3) Y (5)
CCW HX Outlet Side DP Root Vlv	30PEB40AA307	34UJH10026	M	H	SI	S C/NM	Y (3) Y (5)
ESW Drain Isolation Vlv	30PEB40AA401	34UJH01026	M	H	SI	S C/NM	Y (3) Y (5)
ESW Drain Isolation Vlv	30PEB40AA402	34UJH10026	M	H	SI	S C/NM	Y (3) Y (5)
ESW Drain Isolation Vlv	30PEB40AA403	34UJH05026	M	H	SI	S C/NM	Y (3) Y (5)
ESW Drain Isolation Vlv	30PEB40AA405	34UJH05026	M	H	SI	S C/NM	Y (3) Y (5)
ESW Drain Isolation Vlv	30PEB40AA407	34UJH01026	M	H	SI	S C/NM	Y (3) Y (5)
ESW Drain Isolation Vlv	30PEB40AA408	34UJH01026	M	H	SI	S C/NM	Y (3) Y (5)
CCW HX Tube Side Vent Vlv	30PEB40AA508	34UJH10026	M	H	SI	S C/NM	Y (3) Y (5)
CCW HX Tube Side Vent Vlv	30PEB40AA509	34UJH10026	M	H	SI	S C/NM	Y (3) Y (5)
Orifice Plate	30PEB40BP002	34UJH05026	M	H	SI	S C/NM	Y (3) Y (5)
CCW HX DP Measurement	30PEB40CP004	34UJH05026	M	H	SI	S	Y (5)
CCW HX Outlet Temp Measurement	30PEB40CT002	34UJH05026	M	H	SI	S	Y (5)
SAQ HX DP Measurement	30PEB41CP001	34UQB02001	M	M	SI	S	Y (5)
SAQ HX Outlet Temp Measurement	30PEB41CT001	34UQB02001	M	M	SI	S	Y (5)
CCW HX Outlet Isolation Vlv	30PEB80AA004	34UJH05026	M	H	SI	S C/NM	Y (3) Y (5)
ESW Drain Isolation Vlv	30PEB80AA405	34UJH01026	M	H	SI	S C/NM	Y (3) Y (5)
Mechanical Draft Cooling Tower Train 1 (excluding fans)	30PED10AC001	31URB	M	M	SI	S	Y (5)
Mechanical Draft Cooling Tower Train 2 (excluding fans)	30PED20AC001	32URB	M	M	SI	S	Y (5)
Mechanical Draft Cooling Tower Train 3 (excluding fans)	30PED30AC001	33URB	M	M	SI	S	Y (5)
Mechanical Draft Cooling Tower Train 4 (excluding fans)	30PED40AC001	34URB	M	M	SI	S	Y (5)
UHS Cooling Tower Fan	30 PED10AN001	31URB03001	M	M	ES SI	S SI C/NM	Y (5)
UHS Cooling Tower Fan	30 PED10AN002	31URB03002	M	M	ES SI	S SI C/NM	Y (5)
UHS Cooling Tower Fan	30 PED20AN001	32URB03001	M	M	ES SI	S SI C/NM	Y (5)
UHS Cooling Tower Fan	30 PED20AN002	32URB03002	M	M	ES SI	S SI C/NM	Y (5)

Table 3.10-1—List of Seismically and Dynamically Qualified Mechanical and Electrical Equipment (Sheet 95 of 197)

Name Tag (Equipment Description)	Tag Number	Local Area KKS ID (Room Location)	EQ Environment (Note 1)	Radiation Environment Zone (Note 2)	EQ Designated Function (Note 3)		Safety Class (Note 4)			EQ Program Designation (Note 5)
UHS Cooling Tower Fan	30 PED30AN001	33URB03001	M	M	ES	SI	S	SI	C/NM	Y (5)
UHS Cooling Tower Fan	30 PED30AN002	33URB03002	M	M	ES	SI	S	SI	C/NM	Y (5)
UHS Cooling Tower Fan	30 PED40AN001	34URB03001	M	M	ES	SI	S	SI	C/NM	Y (5)
UHS Cooling Tower Fan	30 PED40AN002	34URB03002	M	M	ES	SI	S	SI	C/NM	Y (5)
Safety Chilled Water System (SCWS)										
QKA Cross-Tie Valve, Div 1	30QKA10AA102	31UJK22028	M	M		SI	S		C/NM	Y(5)
QKA Cross-Tie Valve, Div 1	30QKA10AA103	31UJK22028	M	M		SI	S		C/NM	Y(5)
QK Tank Isol Valve, Div 1	30QKA10AA001	31UJK26029	M	M		SI	S		C/NM	Y (5)
QK Pmp #1 Suct Isol Valve, Div 1	30QKA10AA002	31UJK22028	M	M		SI	S		C/NM	Y (5)
QK Pmp #1 Disch Check Valve, Div 1	30QKA10AA003	31UJK22028	M	M		SI	S			Y (5)
QK Pmp #1 Disch Isol Valve, Div 1	30QKA10AA004	31UJK22028	M	M		SI	S		C/NM	Y (5)
QK Chiller Dnstrm Flow Reg Valve, Div 1	30QKA10AA005	31UJK22028	M	M		SI	S		C/NM	Y (5)
QK Chiller Dnstrm Isol Valve, Div 1	30QKA10AA006	31UJK22028	M	M		SI	S		C/NM	Y (5)
QKA10AT001 Upstrm Isol Valve, Div 1	30QKA10AA007	31UJK26029	M	M		SI	S		C/NM	Y (5)
QKA10AT001 Dnstrm Flow Reg Valve, Div 1	30QKA10AA008	31UJK26029	M	M		SI	S		C/NM	Y (5)
QKA10AT001 Dnstrm Isol Valve, Div 1	30QKA10AA009	31UJK26029	M	M		SI	S		C/NM	Y (5)
QK QCB Isol Valve, Div 1	30QKA10AA010	31UJK22028	M	M		SI	S		C/NM	Y (5)
QK QCB Check Valve, Div 1	30QKA10AA011	31UJK22028	M	M		SI	S			Y (5)
QK Bypass Control Valve-MOV, Div 1	30QKA10AA101	31UJK26029	M	M	ES	SI	S		C/NM	Y (5)
QK System Press Relief Valve, Div 1	30QKA10AA191	31UJK26029	M	M	ES	SI	S		C/NM	Y (5)
QKA CP501 Root Valve, Div 1	30QKA10AA301	31UJK26029	M	M		SI	S		C/NM	Y (5)
QKA CP502 Root Valve, Div 1	30QKA10AA302	31UJK26029	M	M		SI	S		C/NM	Y (5)
QKA CP001 Root Valve, Div 1	30QKA10AA303	31UJK26029	M	M		SI	S		C/NM	Y (5)
QKA CP002 Root Valve, Div 1	30QKA10AA304	31UJK26029	M	M		SI	S		C/NM	Y (5)
QKA CP505 Root Valve, Div 1	30QKA10AA305	31UJK22028	M	M		SI	S		C/NM	Y (5)
QKA CP506 Root Valve, Div 1	30QKA10AA306	31UJK22028	M	M		SI	S		C/NM	Y (5)
QKA CP507 Root Valve, Div 1	30QKA10AA307	31UJK22028	M	M		SI	S		C/NM	Y (5)
QKA CP508 Root Valve, Div 1	30QKA10AA308	31UJK22028	M	M		SI	S		C/NM	Y (5)
QKA Chiller Upstrm CP008 Root Vlv, Div 1	30QKA10AA309	31UJK22028	M	M		SI	S		C/NM	Y (5)
QKA Chiller Dnstrm CP008 Root Vlv, Div 1	30QKA10AA310	31UJK22028	M	M		SI	S		C/NM	Y (5)
QKA CP511 Root Valve, Div 1	30QKA10AA311	31UJK26029	M	M		SI	S		C/NM	Y (5)
QKA CP512 Root Valve, Div 1	30QKA10AA312	31UJK26029	M	M		SI	S		C/NM	Y (5)
QKA CP513 Root Valve, Div 1	30QKA10AA315	31UJK26029	M	M		SI	S		C/NM	Y (5)

Table 3.10-1—List of Seismically and Dynamically Qualified Mechanical and Electrical Equipment (Sheet 96 of 197)

Name Tag (Equipment Description)	Tag Number	Local Area KKS ID (Room Location)	EQ Environment (Note 1)	Radiation Environment Zone (Note 2)	EQ Designated Function (Note 3)	Safety Class (Note 4)	EQ Program Designation (Note 5)
QKA CP514 Root Valve, Div 1	30QKA10AA316	31UJK26029	M	M	SI	S C/NM	Y (5)
QKA10BR111 Drain Valve, Div 1	30QKA10AA401	31UJK22028	M	M	SI	S C/NM	Y (5)
QKA10BR108 Drain Valve, Div 1	30QKA10AA402	31UJK22028	M	M	SI	S C/NM	Y (5)
QKA10BR110 Drain Valve, Div 1	30QKA10AA403	31UJK22028	M	M	SI	S C/NM	Y (5)
QK Chiller Upstrm Vent Valve, Div 1	30QKA10AA501	31UJK22028	M	M	SI	S C/NM	Y (5)
QKA10AT001 Upstrm Vent Valve, Div 1	30QKA10AA502	31UJK26029	M	M	SI	S C/NM	Y (5)
QK Sample Isol Valve, Div 1	30QKA10AA609	31UJK22028	M	M	SI	S C/NM	Y (5)
Safety Chilled Water Evaporator, Div 1	30QKA10AC001	31UJK22028	M	M	ES SI	S C/NM	Y (5)
Safety Chilled Water Condenser, Div 1	30QKA10AC002	31UJK31032	M	M	ES SI	S C/NM	Y (5)
Safety Chilled Water Pump #1, Div 1	30QKA10AP107	31UJK22028	M	M	ES SI	S C/NM	Y (5)
Safety Chilled Screen for Bypass, Div 1	30QKA10AT001	31UJK26029	M	M	SI	S C/NM	Y (5)
Safety Chilled Water Exp Tank, Div 1	30QKA10BB101	31UJK26029	M	M	ES SI	S C/NM	Y (5)
QKA Cross-Tie Valve, Div 2	30QKA20AA102	32UJH05020	M	H	SI	S C/NM	Y(3) Y(5)
QKA Cross-Tie Valve, Div 2	30QKA20AA103	32UJH05020	M	H	SI	S C/NM	Y(3) Y(5)
QK Tank Isol Valve, Div 2	30QKA20AA001	32UJH05020	M	H	SI	S C/NM	Y (3) Y (5)
QK Pmp #1 Suct Isol Valve, Div 2	30QKA20AA002	32UJH05020	M	H	SI	S C/NM	Y (3) Y (5)
QK Pmp #1 Disch Check Valve, Div 2	30QKA20AA003	32UJH05020	M	H	SI	S	Y (5)
QK Pmp #1 Disch Isol Valve, Div 2	30QKA20AA004	32UJH05020	M	H	SI	S C/NM	Y (3) Y (5)
QK Chiller Dnstrm Flow Reg Valve, Div 2	30QKA20AA005	32UJH10020	M	H	SI	S C/NM	Y (3) Y (5)
QK Chiller Dnstrm Isol Valve, Div 2	30QKA20AA006	32UJH10020	M	H	SI	S C/NM	Y (3) Y (5)
QKA20AT001 Upstrm Isol Valve, Div 2	30QKA20AA007	32UJH05020	M	H	SI	S C/NM	Y (3) Y (5)
QKA20AT001 Dnstrm Flow Reg Valve, Div 2	30QKA20AA008	32UJH05020	M	H	SI	S C/NM	Y (3) Y (5)
QKA20AT001 Dnstrm Isol Valve, Div 2	30QKA20AA009	32UJH05020	M	H	SI	S C/NM	Y (3) Y (5)
QK QCB Isol Valve, Div 2	30QKA20AA010	32UJH05020	M	H	SI	S C/NM	Y (3) Y (5)
QK QCB Check Valve, Div 2	30QKA20AA011	32UJH05020	M	H	SI	S	Y (5)
QK Bypass Control Valve-MOV, Div 2	30QKA20AA101	32UJH05020	M	H	ES SI	S C/NM	Y (3) Y (5)
QK System Press Relief Valve, Div 2	30QKA20AA191	32UJH05020	M	H	ES SI	S C/NM	Y (3) Y (5)
QKA CP501 Root Valve, Div 2	30QKA20AA301	32UJH05020	M	H	SI	S C/NM	Y (3) Y (5)
QKA CP502 Root Valve, Div 2	30QKA20AA302	32UJH05020	M	H	SI	S C/NM	Y (3) Y (5)
QKA CP001 Root Valve, Div 2	30QKA20AA303	32UJH05020	M	H	SI	S C/NM	Y (3) Y (5)
QKA CP002 Root Valve, Div 2	30QKA20AA304	32UJH05020	M	H	SI	S C/NM	Y (3) Y (5)
QKA CP505 Root Valve, Div 2	30QKA20AA305	32UJH05020	M	H	SI	S C/NM	Y (3) Y (5)
QKA CP506 Root Valve, Div 2	30QKA20AA306	32UJH05020	M	H	SI	S C/NM	Y (3) Y (5)

Table 3.10-1—List of Seismically and Dynamically Qualified Mechanical and Electrical Equipment (Sheet 97 of 197)

Name Tag (Equipment Description)	Tag Number	Local Area KKS ID (Room Location)	EQ Environment (Note 1)	Radiation Environment Zone (Note 2)	EQ Designated Function (Note 3)		Safety Class (Note 4)		EQ Program Designation (Note 5)	
QKA CP507 Root Valve, Div 2	30QKA20AA307	32UJH10020	M	H		SI	S	C/NM	Y (3)	Y (5)
QKA CP508 Root Valve, Div 2	30QKA20AA308	32UJH10020	M	H		SI	S	C/NM	Y (3)	Y (5)
QKA CP008 Upstrm Root Valve, Div 2	30QKA20AA309	32UJH10020	M	H		SI	S	C/NM	Y (3)	Y (5)
QKA CP0008 Dnstrm Root Valve, Div 2	30QKA20AA310	32UJH10020	M	H		SI	S	C/NM	Y (3)	Y (5)
QKA CP511 Root Valve, Div 2	30QKA20AA311	32UJH05020	M	H		SI	S	C/NM	Y (3)	Y (5)
QKA CP512 Root Valve, Dov 2	30QKA20AA312	32UJH05020	M	H		SI	S	C/NM	Y (3)	Y (5)
QKA CP513 Root Valve, Div 2	30QKA20AA315	32UJH05020	M	H		SI	S	C/NM	Y (3)	Y (5)
QKA CP514 Root Valve, Div 2	30QKA20AA316	32UJH05020	M	H		SI	S	C/NM	Y (3)	Y (5)
QKA20BR003 Drain Valve, Div 2	30QKA20AA401	32UJH01020	M	H		SI	S	C/NM	Y (3)	Y (5)
QKA20BR110 Drain Valve, Div 2	30QKA20AA402	32UJH05020	M	H		SI	S	C/NM	Y (3)	Y (5)
QKA20BR002 Drain Valve, Div 2	30QKA20AA403	32UJH05020	M	H		SI	S	C/NM	Y (3)	Y (5)
QKA20BR114 Drain Valve, Div 2	30QKA20AA404	32UJH05020	M	H		SI	S	C/NM	Y (3)	Y (5)
QKA20BR108 DrainValve, Div 2	30QKA20AA501	32UJH10020	M	H		SI	S	C/NM	Y (3)	Y (5)
QK Sample Isol Valve, Div 2	30QKA20AA609	32UJH05020	M	H		SI	S	C/NM	Y (3)	Y (5)
Safety Chilled Water Evaporator, Div 2	30QKA20AC001	32UJH10020	M	H	ES	SI	S	C/NM	Y (3)	Y (5)
Safety Chilled Water Condenser, Div 2	30QKA20AC002	32UJH10020	M	H	ES	SI	S	C/NM	Y (3)	Y (5)
Safety Chilled Water Pump #1, Div 2	30QKA20AP107	32UJH05020	M	H	ES	SI	S	C/NM	Y (3)	Y (5)
Safety Chilled Screen for Bypass, Div 2	30QKA20AT001	32UJH05020	M	H		SI	S	C/NM	Y (3)	Y (5)
Safety Chilled Water Exp Tank, Div 2	30QKA20BB101	32UJH05020	M	H	ES	SI	S	C/NM	Y (3)	Y (5)
QKA Cross-Tie Valve, Div 3	30QKA30AA102	33UJH05020	M	H		SI	S	C/NM	Y(3)	Y(5)
QKA Cross-Tie Valve, Div 3	30QKA30AA103	33UJH05020	M	H		SI	S	C/NM	Y(3)	Y(5)
QK Tank Isol Valve, Div 3	30QKA30AA001	33UJH05020	M	H		SI	S	C/NM	Y (3)	Y (5)
QK Pmp #1 Suct Isol Valv, Div 3	30QKA30AA002	33UJH05020	M	H		SI	S	C/NM	Y (3)	Y (5)
QK Pmp #1 Disch Check Valve, Div 3	30QKA30AA003	33UJH05020	M	H		SI	S			Y (5)
QK Pmp #1 Disch Isol Valve, Div 3	30QKA30AA004	33UJH05020	M	H		SI	S	C/NM	Y (3)	Y (5)
QK Chiller Dnstrm Flow Reg Valve, Div 3	30QKA30AA005	33UJH10020	M	H		SI	S	C/NM	Y (3)	Y (5)
QK Chiller Dnstrm Isol Valve, Div 3	30QKA30AA006	33UJH10020	M	H		SI	S	C/NM	Y (3)	Y (5)
QKA30AT001 Upstrm Isol Valve, Div 3	30QKA30AA007	33UJH05020	M	H		SI	S	C/NM	Y (3)	Y (5)
QKA30AT001 Dnstrm Flow Reg Valve, Div 3	30QKA30AA008	33UJH05020	M	H		SI	S	C/NM	Y (3)	Y (5)
QKA30AT001 Dnstrm Isol Valve, Div 3	30QKA30AA009	33UJH05020	M	H		SI	S	C/NM	Y (3)	Y (5)
QK QCB Isol Valve, Div 3	30QKA30AA010	33UJH05020	M	H		SI	S	C/NM	Y (3)	Y (5)
QK QCB Check Valve, Div 3	30QKA30AA011	33UJH05020	M	H		SI	S	C/NM	Y (3)	Y (5)
QK Bypass Control Valve-MOV, Div 3	30QKA30AA101	33UJH05020	M	H	ES	SI	S	C/NM	Y (3)	Y (5)

Table 3.10-1—List of Seismically and Dynamically Qualified Mechanical and Electrical Equipment (Sheet 98 of 197)

Name Tag (Equipment Description)	Tag Number	Local Area KKS ID (Room Location)	EQ Environment (Note 1)	Radiation Environment Zone (Note 2)	EQ Designated Function (Note 3)	Safety Class (Note 4)	EQ Program Designation (Note 5)	
QK System Press Relief Valve, Div 3	30QKA30AA191	33UJH05020	M	H	SI	S C/NM	Y (3)	Y (5)
QKA CP501 Root Valve, Div 3	30QKA30AA301	33UJH05020	M	H	SI	S C/NM	Y (3)	Y (5)
QKA CP502 Root Valve, Div 3	30QKA30AA302	33UJH05020	M	H	SI	S C/NM	Y (3)	Y (5)
QKA CP001 Root Valve, Div 3	30QKA30AA303	33UJH05020	M	H	SI	S C/NM	Y (3)	Y (5)
QKA CP002 Root Valve, Div 2	30QKA30AA304	33UJH05020	M	H	SI	S C/NM	Y (3)	Y (5)
QKA CP505 Root Valve, Div 3	30QKA30AA305	33UJH05020	M	H	SI	S C/NM	Y (3)	Y (5)
QKA CP506 Root Valve, Div 3	30QKA30AA306	33UJH05020	M	H	SI	S C/NM	Y (3)	Y (5)
QKA CP507 Root Valve, Div 3	30QKA30AA307	33UJH10020	M	H	SI	S C/NM	Y (3)	Y (5)
QKA CP508 Root Valve, Div 3	30QKA30AA308	33UJH10020	M	H	SI	S C/NM	Y (3)	Y (5)
QKA CP008 Upstrm Root Valve, Div 3	30QKA30AA309	33UJH10020	M	H	SI	S C/NM	Y (3)	Y (5)
QKA CP008 Dnstrm Root Valve, Div 3	30QKA30AA310	33UJH10020	M	H	SI	S C/NM	Y (3)	Y (5)
QKA CP511 Root Valve, Div 3	30QKA30AA311	33UJH05020	M	H	SI	S C/NM	Y (3)	Y (5)
QKA CP512 Root Valve, Div 3	30QKA30AA312	33UJH05020	M	H	SI	S C/NM	Y (3)	Y (5)
QKA CP5513 Root Valve, Div 3	30QKA30AA315	33UJH05020	M	H	SI	S C/NM	Y (3)	Y (5)
QKA CP514 Root Valve, Div 3	30QKA30AA316	33UJH05020	M	H	SI	S C/NM	Y (3)	Y (5)
QKA30BR003 Drain Valve, Div 3	30QKA30AA401	33UJH01020	M	H	SI	S C/NM	Y (3)	Y (5)
QKA30BR002 Drain Valve, Div 3	30QKA30AA402	33UJH05020	M	H	SI	S C/NM	Y (3)	Y (5)
QKA30BR108 Drain Valve, Div 3	30QKA30AA403	33UJH10020	M	H	SI	S C/NM	Y (3)	Y (5)
QKA30BR110 Drain Valve, Div 3	30QKA30AA404	33UJH10020	M	H	SI	S C/NM	Y (3)	Y (5)
QKA30BR114 Drain Valve, Div 3	30QKA30AA405	30UFA01001	M	H	SI	S C/NM	Y (3)	Y (5)
QKA30BR108 Vent Valve, Div 3	30QKA30AA501	33UJH10020	M	H	SI	S C/NM	Y (3)	Y (5)
QKB30BR112 Vent Valve, Div 3	30QKA30AA503	33UJK31035	M	M	SI	S C/NM		Y (5)
QK Sample Isol Valve, Div 2	30QKA30AA609	33UJH05020	M	H	SI	S C/NM	Y (3)	Y (5)
Safety Chilled Water Evaporator, Div 3	30QKA30AC001	33UJH10020	M	H	ES SI	S C/NM	Y (3)	Y (5)
Safety Chilled Water Condenser, Div 3	30QKA30AC002	33UJH10020	M	H	ES SI	S C/NM	Y (3)	Y (5)
Safety Chilled Water Pump #1, Div 3	30QKA30AP107	33UJH05020	M	H	ES SI	S C/NM	Y (3)	Y (5)
Safety Chilled Screen for Bypass, Div 3	30QKA30AT001	33UJH05020	M	H	SI	S C/NM	Y (3)	Y (5)
Safety Chilled Water Exp Tank, Div 3	30QKA30BB101	33UJH05020	M	H	ES SI	S C/NM	Y (3)	Y (5)
QKA Cross-Tie Valve, Div 4	30QKA40AA102	34UJK22028	M	M	SI	S C/NM		Y(5)
QKA Cross-Tie Valve, Div 4	30QKA40AA103	34UJK22028	M	M	SI	S C/NM		Y(5)
QK Tank Isol Valve, Div 4	30QKA40AA001	34UJK26029	M	M	SI	S C/NM		Y (5)
QK Pmp #1 Suct Isol Valve, Div 4	30QKA40AA002	34UJK22028	M	M	SI	S C/NM		Y (5)
QK Pmp #1 Disch Check Valve, Div 4	30QKA40AA003	34UJK22028	M	M	SI	S C/NM		Y (5)

Table 3.10-1—List of Seismically and Dynamically Qualified Mechanical and Electrical Equipment (Sheet 99 of 197)

Name Tag (Equipment Description)	Tag Number	Local Area KKS ID (Room Location)	EQ Environment (Note 1)	Radiation Environment Zone (Note 2)	EQ Designated Function (Note 3)	Safety Class (Note 4)	EQ Program Designation (Note 5)
QK Pmp #1 Disch Isol Valve, Div 4	30QKA40AA004	34UJK22028	M	M	SI	S C/NM	Y (5)
QK Chiller Dnstrm Flow Reg Valve, Div 4	30QKA40AA005	34UJK22028	M	M	SI	S C/NM	Y (5)
QK Chiller Dnstrm Isol Valve, Div 4	30QKA40AA006	34UJK22028	M	M	SI	S C/NM	Y (5)
QKA40AT001 Upstrm Isol Valve, Div 4	30QKA40AA007	34UJK26029	M	M	SI	S C/NM	Y (5)
QKA40AT001 Dnstrm Flow Reg Valve, Div 4	30QKA40AA008	34UJK26029	M	M	SI	S C/NM	Y (5)
QKA40AT001 Dnstrm Isol Valve, Div 4	30QKA40AA009	34UJK26029	M	M	SI	S C/NM	Y (5)
QK QCB Isol Valve, Div 4	30QKA40AA010	34UJK22028	M	M	SI	S C/NM	Y (5)
QK QCB Check Valve, Div 4	30QKA40AA011	34UJK22028	M	M	SI	S C/NM	Y (5)
QK Bypass Control Valve-MOV, Div 4	30QKA40AA101	34UJK26029	M	M	ES SI	S C/NM	Y (5)
QK System Press Relief Valve, Div 4	30QKA40AA191	34UJK26029	M	M	ES SI	S C/NM	Y (5)
QKA CP501 Root Valve, Div 4	30QKA40AA301	34UJK26029	M	M	SI	S C/NM	Y (5)
QKA CP502 Root Valve, Div 4	30QKA40AA302	34UJK26029	M	M	SI	S C/NM	Y (5)
QKA CP001 Root Valve, Div 4	30QKA40AA303	34UJK26029	M	M	SI	S C/NM	Y (5)
QKA CP002 Root Valve, Div 4	30QKA40AA304	34UJK26029	M	M	SI	S C/NM	Y (5)
QKA CP505 Root Valve, Div 4	30QKA40AA305	34UJK22028	M	M	SI	S C/NM	Y (5)
QKA CP506 Root Valve, Div 4	30QKA40AA306	34UJK22028	M	M	SI	S C/NM	Y (5)
QKA CP507 Root Valve, Div 4	30QKA40AA307	34UJK22028	M	M	SI	S C/NM	Y (5)
QKA CP508 Root Valve, Div 4	30QKA40AA308	34UJK22028	M	M	SI	S C/NM	Y (5)
QKA CP008 Upstrm Root Valve, Div 4	30QKA40AA309	34UJK22028	M	M	SI	S C/NM	Y (5)
QKA CP008 Dnstrm Root Valve, Div 4	30QKA40AA310	34UJK22028	M	M	SI	S C/NM	Y (5)
QKA CP511 Root Valve, Div 4	30QKA40AA311	34UJK26029	M	M	SI	S C/NM	Y (5)
QKA CP512 Root Valve, Div 4	30QKA40AA312	34UJK26029	M	M	SI	S C/NM	Y (5)
QKA CP513 Root Valve, Div 4	30QKA40AA315	34UJK26029	M	M	SI	S C/NM	Y (5)
QKA CP514 Root Valve, Div 4	30QKA40AA316	34UJK26029	M	M	SI	S C/NM	Y (5)
QKA40BR111 Drain Valve, Div 4	30QKA40AA401	34UJK22028	M	M	SI	S C/NM	Y (5)
QKA40BR108 Drain Valve, Div 4	30QKA40AA407	34UJK22028	M	M	SI	S C/NM	Y (5)
QK Sample Isol Valve, Div 4	30QKA40AA609	34UJK22028	M	M	SI	S C/NM	Y (5)
Safety Chilled Water Evaporator, Div 4	30QKA40AC001	34UJK22028	M	M	ES SI	S C/NM	Y (5)
Safety Chilled Water Condenser, Div 4	30QKA40AC002	34UJK31032	M	H	ES SI	S C/NM	Y (3) Y (5)
Safety Chilled Water Pump #1, Div 4	30QKA40AP107	34UJK22028	M	M	ES SI	S C/NM	Y (5)
Safety Chilled Screen for Bypass, Div 4	30QKA40AT001	34UJK26029	M	M	SI	S C/NM	Y (5)
Safety Chilled Water Exp Tank, Div 4	30QKA40BB101	34UJK26029	M	M	ES SI	S C/NM	Y (5)
SAB01AC001 Upstrm Isol Valve, Div 1	30QKB10AA001	32UJK31034	M	M	SI	S C/NM	Y (5)

Table 3.10-1—List of Seismically and Dynamically Qualified Mechanical and Electrical Equipment (Sheet 100 of 197)

Name Tag (Equipment Description)	Tag Number	Local Area KKS ID (Room Location)	EQ Environment (Note 1)	Radiation Environment Zone (Note 2)	EQ Designated Function (Note 3)		Safety Class (Note 4)		EQ Program Designation (Note 5)
SAB01AC001 Dnstrm Flow Reg Vlv, Div 1	30QKB10AA002	32UJK31034	M	M		SI	S	C/NM	Y (5)
SAB01AC001 Dnstrm Isol Valve, Div 1	30QKB10AA004	32UJK31034	M	M		SI	S	C/NM	Y (5)
SAB01AC001 Control Valve-MOV, Div 1	30QKB10AA101	32UJK31034	M	M	ES	SI	S	C/NM	Y (5)
QKB CP501 Root Valve, Div 1	30QKB10AA301	32UJK31034	M	M		SI	S	C/NM	Y (5)
QKB CP502 Root Valve, Div 1	30QKB10AA302	32UJK31034	M	M		SI	S	C/NM	Y (5)
QKB CP503 Root Valve, Div 1	30QKB10AA303	32UJK31034	M	M		SI	S	C/NM	Y (5)
QKB CP504 Root Valve, Div 1	30QKB10AA304	32UJK31034	M	M		SI	S	C/NM	Y (5)
QKB CP505 Root Valve, Div 1	30QKB10AA305	32UJK31034	M	M		SI	S	C/NM	Y (5)
QKB10BR113 Drain Valve, Div 1	30QKB10AA401	32UJK31034	M	M		SI	S	C/NM	Y (5)
SAB01AC001 Upstrm Vent Valve, Div 1	30QKB10AA501	32UJK31034	M	M		SI	S	C/NM	Y (5)
QKB10AA001 Upstrm Vent Valve, Div 1	30QKB10AA502	31UJK22024	M	M		SI	S	C/NM	Y (5)
QKB10AT001 Dnstrm Vent Valve, Div 1	30QKB10AA503	31UJK22024	M	M		SI	S	C/NM	Y (5)
Safety Chilled Screen for SAB01, Div 1	30QKB10AT001	31UJK26029	M	M		SI	S	C/NM	Y (5)
SAB02AC001 Upstrm Isol Valve, Div 2	30QKB20AA001	32UJK31035	M	M		SI	S	C/NM	Y (5)
SAB02AC001 Flow Reg Valve, Div 2	30QKB20AA002	32UJK31035	M	M		SI	S	C/NM	Y (5)
SAB02AC001 Dnstrm Isol Valve, Div 2	30QKB20AA004	32UJK31035	M	M		SI	S	C/NM	Y (5)
SAB02AC001 Control Valve-MOV, Div 2	30QKB20AA101	32UJK31035	M	M	ES	SI	S	C/NM	Y (5)
QKB CP501 Root Valve, Div 2	30QKB20AA301	32UJK31035	M	M		SI	S	C/NM	Y (5)
QKB CP502 Root Valve, Div 2	30QKB20AA302	32UJK31035	M	M		SI	S	C/NM	Y (5)
QKB CP503 Root Valve, Div 2	30QKB20AA303	32UJK31035	M	M		SI	S	C/NM	Y (5)
QKB CP504 Root Valve, Div 2	30QKB20AA304	32UJK31035	M	M		SI	S	C/NM	Y (5)
QKB CP505 Root Valve, Div 2	30QKB20AA305	32UJK31035	M	M		SI	S	C/NM	Y (5)
QKB20BR113 Drain Valve, Div 2	30QKB20AA401	32UJK31035	M	M		SI	S	C/NM	Y (5)
QKB20BR112 Drain Valve, Div 2	30QKB20AA402	32UJK31035	M	M		SI	S	C/NM	Y (5)
QKB20BR112 Vent Valve, Div 2	30QKB20AA501	32UJK31018	M	M		SI	S	C/NM	Y (5)
QKB20BR114 Vent Valve, Div 2	30QKB20AA502	32UJK31018	M	M		SI	S	C/NM	Y (5)
Safety Chilled Screen for SAB02, Div 2	30QKB20AT001	32UJK31035	M	M		SI	S	C/NM	Y (5)
SAB03AC001 Upstrm Isol Valve, Div 3	30QKB30AA001	33UJK31035	M	M		SI	S	C/NM	Y (5)
SAB03AC001 Flow Reg Valve, Div 3	30QKB30AA002	33UJK31035	M	M		SI	S	C/NM	Y (5)
SAB03AC001 Dnstrm Isol Valve, Div 3	30QKB30AA004	33UJK31035	M	M		SI	S	C/NM	Y (5)
SAB03AC001 Control Valve-MOV, Div 3	30QKB30AA101	33UJK31035	M	M	ES	SI	S	C/NM	Y (5)
QKB CP501 Root Valve, Div 3	30QKB30AA301	33UJK31035	M	M		SI	S	C/NM	Y (5)
QKB CP502 Root Valve, Div 3	30QKB30AA302	33UJK31035	M	M		SI	S	C/NM	Y (5)

Table 3.10-1—List of Seismically and Dynamically Qualified Mechanical and Electrical Equipment (Sheet 101 of 197)

Name Tag (Equipment Description)	Tag Number	Local Area KKS ID (Room Location)	EQ Environment (Note 1)	Radiation Environment Zone (Note 2)	EQ Designated Function (Note 3)	Safety Class (Note 4)	EQ Program Designation (Note 5)
QKB CP503 Root Valve, Div 3	30QKB30AA303	33UJK31035	M	M	SI	S C/NM	Y (5)
QKB CP504 Root Valve, Div 3	30QKB30AA304	33UJK31035	M	M	SI	S C/NM	Y (5)
QKB CP505 Root Valve, Div 3	30QKB30AA305	33UJK31035	M	M	SI	S C/NM	Y (5)
QKB30BR113 Drain Valve, Div 3	30QKB30AA401	33UJK31035	M	M	SI	S C/NM	Y (5)
QKB30BR112 Vent Valve, Div 3	30QKB30AA501	33UJK31035	M	M	SI	S C/NM	Y (5)
QKB30BR114 Vent Valve, Div 3	30QKB30AA502	33UJK31035	M	M	SI	S C/NM	Y (5)
Safety Chilled Screen for SAB03, Div 3	30QKB30AT001	33UJK31035	M	H	SI	S C/NM	Y (3) Y (5)
SAB04AC001 Upstrm Isol Valve, Div 4	30QKB40AA001	33UJK31034	M	M	SI	S C/NM	Y (5)
SAB04AC001 Dnstrm Flow Reg Valve, Div 4	30QKB40AA002	33UJK31034	M	M	SI	S C/NM	Y (5)
SAB04AC001 Dnstrm Isol Valve, Div 4	30QKB40AA004	33UJK31034	M	M	SI	S C/NM	Y (5)
SAB04AC001 Control Valve-MOV, Div 4	30QKB40AA101	33UJK31034	M	M	ES SI	S C/NM	Y (5)
QKB CP501 Root Valve, Div 4	30QKB40AA301	33UJK31034	M	M	SI	S C/NM	Y (5)
QKB CP502 Root Valve, Div 4	30QKB40AA302	33UJK31034	M	M	SI	S C/NM	Y (5)
QKB CP503 Root Valve, Div 4	30QKB40AA303	33UJK31034	M	M	SI	S C/NM	Y (5)
QKB CP504 Root Valve, Div 4	30QKB40AA304	33UJK31034	M	M	SI	S C/NM	Y (5)
QKB CP505 Root Valve, Div 4	30QKB40AA305	33UJK31034	M	M	SI	S C/NM	Y (5)
QKB20BR113 Drain Valve, Div 2	30QKB40AA401	33UJK31034	M	M	SI	S C/NM	Y (5)
QKB40BR112 Drain Valve, Div 4	30QKB40AA402	33UJK31034	M	M	SI	S C/NM	Y (5)
QKB40BR112 Vent Valve, Div 4	30QKB40AA501	33UJK31034	M	M	SI	S C/NM	Y (5)
QKB40BR115 Vent Valve, Div 4	30QKB40AA502	34UJK22024	M	M	SI	S C/NM	Y (5)
QKB40BR116 Vent Valve, Div 4	30QKB40AA503	34UJK22024	M	M	SI	S C/NM	Y (5)
Safety Chilled Screen for SAB04, Div 4	30QKB40AT001	33UJK31034	M	M	SI	S C/NM	Y (5)
SAC01AC001 Upstrm Isol Valve, Div 1	30QKC10AA001	31UJK22028	M	M	SI	S C/NM	Y (5)
SAC01AC001 Dnstrm Flow Reg Vlv, Div 1	30QKC10AA002	31UJK26029	M	M	SI	S C/NM	Y (5)
SAC01AC001 Dnstrm Isol Valve, Div 1	30QKC10AA003	31UJK26029	M	M	SI	S C/NM	Y (5)
SAC61AC001 Upstrm Isol Valve, Div 1	30QKC10AA004	31UJH01024	M	H	SI	S C/NM	Y (3) Y (5)
SAC61AC001 Dnstrm Flow Reg Valve, Div 1	30QKC10AA005	31UJH01024	M	H	SI	S C/NM	Y (3) Y (5)
SAC61AC001 Dnstrm Isol Valve, Div 1	30QKC10AA006	31UJH01024	M	H	SI	S C/NM	Y (3) Y (5)
SAC61AC002 Upstrm Isol Valve, Div 1	30QKC10AA008	31UJH01026	M	H	SI	S C/NM	Y (3) Y (5)
SAC61AC002 Dnstrm Flow Reg Valve, Div 1	30QKC10AA009	31UJH01026	M	H	SI	S C/NM	Y (3) Y (5)
SAC61AC002 Dnstrm Isol Valve, Div 1	30QKC10AA010	31UJH01026	M	H	SI	S C/NM	Y (3) Y (5)
KLC51AC001 Upstrm Isol Valve, Div 1	30QKC10AA011	31UJH10002	M	H	SI	S C/NM	Y (3) Y (5)
KLC51AC001 Dnstrm Flow Reg Valve, Div 1	30QKC10AA012	31UJH10002	M	H	SI	S C/NM	Y (3) Y (5)

Table 3.10-1—List of Seismically and Dynamically Qualified Mechanical and Electrical Equipment (Sheet 102 of 197)

Name Tag (Equipment Description)	Tag Number	Local Area KKS ID (Room Location)	EQ Environment (Note 1)	Radiation Environment Zone (Note 2)	EQ Designated Function (Note 3)		Safety Class (Note 4)		EQ Program Designation (Note 5)	
KLC51AC001 Dnstrm Isol Valve, Div 1	30QKC10AA013	31UJH10002	M	H		SI	S	C/NM	Y (3)	Y (5)
KLC51AC003 Upstrm Isol Valve, Div 1	30QKC10AA014	31UJH10010	M	H		SI	S	C/NM	Y (3)	Y (5)
KLC51AC003 Dnstrm Flow Reg Valve, Div 1	30QKC10AA015	31UJH10010	M	H		SI	S	C/NM	Y (3)	Y (5)
KLC51AC003 Dnstrm Isol Valve, Div 1	30QKC10AA016	31UJH10010	M	H		SI	S	C/NM	Y (3)	Y (5)
KLC51AC002 Upstrm Isol Valve, Div 1	30QKC10AA017	31UJH10002	M	H		SI	S	C/NM	Y (3)	Y (5)
KLC51AC002 Dnstrm Flow Reg Valve, Div 1	30QKC10AA018	31UJH10002	M	H		SI	S	C/NM	Y (3)	Y (5)
KLC51AC002 Dnstrm Isol Valve, Div 1	30QKC10AA019	31UJH10002	M	H		SI	S	C/NM	Y (3)	Y (5)
JNG10AP001 Dnstrm Isol Valve, Div 1	30QKC10AA020	31UJH01001	M	H		SI	S	C/NM	Y (3)	Y (5)
JNG10AP001 Upstrm Isol Valve, Div 1	30QKC10AA021	31UJH01001	M	H		SI	S	C/NM	Y (3)	Y (5)
JNG10AP001 Dnstrm Flow Reg Valve, Div 1	30QKC10AA022	31UJH01001	M	H		SI	S	C/NM	Y (3)	Y (5)
LHSI Pmp Upstrm Control Valve-MOV, Div 1	30QKC10AA025	31UJH01001	M	H	ES	SI	S	C/NM	Y (3)	Y (5)
LHSI Pmp Mtr Dnstrm Flow Reg Vlv, Div 1	30QKC10AA026	31UJH01001	M	H		SI	S	C/NM	Y (3)	Y (5)
LHSI Pmp Seal Dnstrm Flow Reg Vlv, Div 1	30QKC10AA027	31UJH01001	M	H		SI	S	C/NM	Y (3)	Y (5)
LHSI Pmp Seal Dnstrm Check Vlv, Div 1	30QKC10AA028	31UJH01001	M	H		SI	S	C/NM	Y (3)	Y (5)
SAC01AC001 Control Valve-MOV, Div 1	30QKC10AA101	31UJK26029	M	M	ES	SI	S	C/NM		Y (5)
QKC CP501 Root Valve, Div 1	30QKC10AA301	31UJK22028	M	M		SI	S	C/NM		Y (5)
QKC CP502 Root Valve, Div 1	30QKC10AA302	31UJK26029	M	M		SI	S	C/NM		Y (5)
QKC CP503 Root Valve, Div 1	30QKC10AA303	31UJK26029	M	M		SI	S	C/NM		Y (5)
QKC CP504 Root Valve, Div 1	30QKC10AA304	31UJH01024	M	H		SI	S	C/NM	Y (3)	Y (5)
QKC CP505 Root Valve, Div 1	30QKC10AA305	31UJH01024	M	H		SI	S	C/NM	Y (3)	Y (5)
QKC CP506 Root Valve, Div 1	30QKC10AA306	31UJH01024	M	H		SI	S	C/NM	Y (3)	Y (5)
QKC CP508 Root Valve, Div 1	30QKC10AA308	31UJH01026	M	H		SI	S	C/NM	Y (3)	Y (5)
QKC CP509 Root Valve, Div 1	30QKC10AA309	31UJH01026	M	H		SI	S	C/NM	Y (3)	Y (5)
QKC CP510 Root Valve, Div 1	30QKC10AA310	31UJH01026	M	H		SI	S	C/NM	Y (3)	Y (5)
QKC CP511 Root Valve, Div 1	30QKC10AA311	31UJH10002	M	H		SI	S	C/NM	Y (3)	Y (5)
QKC CP512 Root Valve, Div 1	30QKC10AA312	31UJH10002	M	H		SI	S	C/NM	Y (3)	Y (5)
QKC CP513 Root Valve, Div 1	30QKC10AA313	31UJH10002	M	H		SI	S	C/NM	Y (3)	Y (5)
QKC CP519 Root Valve, Div 1	30QKC10AA319	31UJK26029	M	M		SI	S	C/NM		Y (5)
QKC CP520 Root Valve, Div 1	30QKC10AA320	31UJK26029	M	M		SI	S	C/NM		Y (5)
QKC CP521 Root Valve, Div 1	30QKC10AA321	31UJH10010	M	H		SI	S	C/NM	Y (3)	Y (5)
QKC CP522 Root Valve, Div 1	30QKC10AA322	31UJH10010	M	H		SI	S	C/NM	Y (3)	Y (5)
QKC CP523 Root Valve, Div 1	30QKC10AA323	31UJH10010	M	H		SI	S	C/NM	Y (3)	Y (5)
QKC CP524 Root Valve, Div 1	30QKC10AA324	31UJH10002	M	H		SI	S	C/NM	Y (3)	Y (5)

Table 3.10-1—List of Seismically and Dynamically Qualified Mechanical and Electrical Equipment (Sheet 103 of 197)

Name Tag (Equipment Description)	Tag Number	Local Area KKS ID (Room Location)	EQ Environment (Note 1)	Radiation Environment Zone (Note 2)	EQ Designated Function (Note 3)	Safety Class (Note 4)		EQ Program Designation (Note 5)	
QKC CP525 Root Valve, Div 1	30QKC10AA325	31UJH10002	M	H	SI	S	C/NM	Y (3)	Y (5)
QKC CP526 Root Valve, Div 1	30QKC10AA326	31UJH10002	M	H	SI	S	C/NM	Y (3)	Y (5)
QKC CP527 Root Valve, Div 1	30QKC10AA327	31UJH10010	M	H	SI	S	C/NM	Y (3)	Y (5)
QKC CP528 Root Valve, Div 1	30QKC10AA328	31UJH01001	M	H	SI	S	C/NM	Y (3)	Y (5)
QKC CP529 Root Valve, Div 1	30QKC10AA329	31UJH01001	M	H	SI	S	C/NM	Y (3)	Y (5)
QKC10BR002 Drain Valve, Div 1	30QKC10AA401	31UJK22028	M	M	SI	S	C/NM		Y (5)
QKC10BR023 Drain Valve, Div 1	30QKC10AA402	31UJH01024	M	H	SI	S	C/NM	Y (3)	Y (5)
QKC10BR009 Drain Valve, Div 1	30QKC10AA403	31UJH01026	M	H	SI	S	C/NM	Y (3)	Y (5)
QKC10BR021 Drain Valve, Div 1	30QKC10AA404	31UJH10002	M	H	SI	S	C/NM	Y (3)	Y (5)
QKC10BR017 Drain Valve, Div 1	30QKC10AA405	31UJH10010	M	H	SI	S	C/NM	Y (3)	Y (5)
QKC10BR020 Drain Valve, Div 1	30QKC10AA407	31UJH10002	M	H	SI	S	C/NM	Y (3)	Y (5)
QKC10BR018 Drain Valve, Div 1	30QKC10AA408	31UJH10002	M	H	SI	S	C/NM	Y (3)	Y (5)
QKC10BR022 Drain Valve, Div 1	30QKC10AA409	31UJH01024	M	H	SI	S	C/NM	Y (3)	Y (5)
QKC10BR010 Drain Valve, Div 1	30QKC10AA410	31UJH01001	M	H	SI	S	C/NM	Y (3)	Y (5)
QKC10BR011 Drain Valve, Div 1	30QKC10AA411	31UJH01001	M	H	SI	S	C/NM	Y (3)	Y (5)
QKC10BR004 Drain Valve, Div 1	30QKC10AA412	31UJH01001	M	H	SI	S	C/NM	Y (3)	Y (5)
QKC10BR009 Drain Valve, Div 1	30QKC10AA413	31UJH01026	M	H	SI	S	C/NM	Y (3)	Y (5)
QKC10BR005 Drain Valve, Div 1	30QKC10AA416	31UJH01001	M	H	SI	S	C/NM	Y (3)	Y (5)
SAC01AC001 Upstrm Vent Valve, Div 1	30QKC10AA501	31UJK22028	M	M	SI	S	C/NM		Y (5)
QKC10BR022 Vent Valve, Div 1	30QKC10AA502	31UJH01024	M	H	SI	S	C/NM	Y (3)	Y (5)
QKC10BR008 Vent Valve, Div 1	30QKC10AA503	31UJH01026	M	H	SI	S	C/NM	Y (3)	Y (5)
QKC10BR017 Vent Valve, Div 1	30QKC10AA505	31UJH10010	M	H	SI	S	C/NM	Y (3)	Y (5)
QKC10BR018 Vent Valve, Div 1	30QKC10AA506	31UJH10002	M	H	SI	S	C/NM	Y (3)	Y (5)
QKC10BR019 Vent Valve, Div 1	30QKC10AA507	31UJH10002	M	H	SI	S	C/NM	Y (3)	Y (5)
QKC10AT001 Upstrm Vent Valve, Div 1	30QKC10AA508	31UJK26029	M	M	SI	S	C/NM		Y (5)
QKC10BR009 Vent Valve, Div 1	30QKC10AA509	31UJH01026	M	H	SI	S	C/NM	Y (3)	Y (5)
QKC10BR005 Vent Valve, Div 1	30QKC10AA510	31UJH01001	M	H	SI	S	C/NM	Y (3)	Y (5)
QKC10BR043 Vent Valve, Div 1	30QKC10AA520	31UJH01001	M	H	SI	S	C/NM	Y (3)	Y (5)
Safety Chilled Screen for SAC01, Div 1	30QKC10AT001	31UJK26029	M	M	SI	S	C/NM		Y (5)
SAC02AC001 Upstrm Isol Valve, Div 2	30QKC20AA001	32UJK31018	M	M	SI	S	C/NM		Y (5)
SAC02AC001 Flow Reg Valve, Div 2	30QKC20AA002	32UJK31018	M	M	SI	S	C/NM		Y (5)
SAC02AC001 Dnstrm Isol Valve, Div 2	30QKC20AA003	32UJK31018	M	M	SI	S	C/NM		Y (5)
SAC62AC001 Upstrm Isol Valve, Div 2	30QKC20AA004	32UJH01024	M	H	SI	S	C/NM	Y (3)	Y (5)

Table 3.10-1—List of Seismically and Dynamically Qualified Mechanical and Electrical Equipment (Sheet 104 of 197)

Name Tag (Equipment Description)	Tag Number	Local Area KKS ID (Room Location)	EQ Environment (Note 1)	Radiation Environment Zone (Note 2)	EQ Designated Function (Note 3)		Safety Class (Note 4)		EQ Program Designation (Note 5)	
SAC62AC001 Dnstrm Flow Reg Valve, Div 2	30QKC20AA005	32UJH01024	M	H		SI	S	C/NM	Y (3)	Y (5)
SAC62AC001 Dnstrm Isol Valve, Div 2	30QKC20AA006	32UJH01024	M	H		SI	S	C/NM	Y (3)	Y (5)
SAC62AC002 Upstrm Isol Valve, Div 2	30QKC20AA008	32UJH05020	M	H		SI	S	C/NM	Y (3)	Y (5)
SAC62AC002 Dnstrm Flow Reg Valve, Div 2	30QKC20AA009	32UJH05020	M	H		SI	S	C/NM	Y (3)	Y (5)
SAC62AC002 Dnstrm Isol Valve, Div 2	30QKC20AA010	32UJH05020	M	H		SI	S	C/NM	Y (3)	Y (5)
KLC52AC001 Upstrm Isol Valve, Div 2	30QKC20AA011	32UJH05005	M	H		SI	S	C/NM	Y (3)	Y (5)
KLC52AC001 Dnstrm Flow Reg Valve, Div 2	30QKC20AA012	32UJH05005	M	H		SI	S	C/NM	Y (3)	Y (5)
KLC52AC001 Dnstrm Isol Valve, Div 2	30QKC20AA013	32UJH05005	M	H		SI	S	C/NM	Y (3)	Y (5)
KLC52AC002 Upstrm Isol Valve, Div 2	30QKC20AA014	32UJH10002	M	H		SI	S	C/NM	Y (3)	Y (5)
KLC52AC002 Dnstrm Flow Reg Valve, Div 2	30QKC20AA015	32UJH10002	M	H		SI	S	C/NM	Y (3)	Y (5)
KLC52AC002 Dnstrm Isol Valve, Div 2	30QKC20AA016	32UJH10002	M	H		SI	S	C/NM	Y (3)	Y (5)
SAC02AC001 Control Valve-MOV, Div 2	30QKC20AA101	32UJK31018	M	M	ES	SI	S	C/NM		Y (5)
QKC CP501 Root Valve, Div 2	30QKC20AA301	32UJK31018	M	M		SI	S	C/NM		Y (5)
QKC CP502 Root Valve, Div 2	30QKC20AA302	32UJK31018	M	M		SI	S	C/NM		Y (5)
QKC CP503 Root Valve, Div 2	30QKC20AA303	32UJK31018	M	M		SI	S	C/NM		Y (5)
QKC CP504 Root Valve, Div 2	30QKC20AA304	32UJH01024	M	H		SI	S	C/NM	Y (3)	Y (5)
QKC CP505 Root Valve, Div 2	30QKC20AA305	32UJH01024	M	H		SI	S	C/NM	Y (3)	Y (5)
QKC CP506 Root Valve, Div 2	30QKC20AA306	32UJH01024	M	H		SI	S	C/NM	Y (3)	Y (5)
QKC CP508 Root Valve, Div 2	30QKC20AA308	32UJH05020	M	H		SI	S	C/NM	Y (3)	Y (5)
QKC CP509 Root Valve, Div 2	30QKC20AA309	32UJH05020	M	H		SI	S	C/NM	Y (3)	Y (5)
QKC CP510 Root Valve, Div 2	30QKC20AA310	32UJH05020	M	H		SI	S	C/NM	Y (3)	Y (5)
QKC CP511 Root Valve, Div 2	30QKC20AA311	32UJH05005	M	H		SI	S	C/NM	Y (3)	Y (5)
QKC CP512 Root Valve, Div 2	30QKC20AA312	32UJH05005	M	H		SI	S	C/NM	Y (3)	Y (5)
QKC CP513 Root Valve, Div 2	30QKC20AA313	32UJH05005	M	H		SI	S	C/NM	Y (3)	Y (5)
QKC CP519 Root Valve, Div 2	30QKC20AA319	32UJK31018	M	M		SI	S	C/NM		Y (5)
QKC CP520 Root Valve, Div 2	30QKC20AA320	32UJK31018	M	M		SI	S	C/NM		Y (5)
QKC CP521 Root Valve, Div 2	30QKC20AA321	32UJH10002	M	H		SI	S	C/NM	Y (3)	Y (5)
QKC CP522 Root Valve, Div 2	30QKC20AA322	32UJH10002	M	H		SI	S	C/NM	Y (3)	Y (5)
QKC CP523 Root Valve, Div 2	30QKC20AA323	32UJH10002	M	H		SI	S	C/NM	Y (3)	Y (5)
QKC20BR002 Drain Valve, Div 2	30QKC20AA401	32UJK31018	M	M		SI	S	C/NM		Y (5)
QKC20BR007 Drain Valve, Div 2	30QKC20AA402	32UJH01024	M	H		SI	S	C/NM	Y (3)	Y (5)
QKC20BR009 Drain Valve, Div 2	30QKC20AA403	32UJH05020	M	H		SI	S	C/NM	Y (3)	Y (5)
QKC20BR016 Drain Valve, Div 2	30QKC20AA404	32UJH05005	M	H		SI	S	C/NM	Y (3)	Y (5)

Table 3.10-1—List of Seismically and Dynamically Qualified Mechanical and Electrical Equipment (Sheet 105 of 197)

Name Tag (Equipment Description)	Tag Number	Local Area KKS ID (Room Location)	EQ Environment (Note 1)	Radiation Environment Zone (Note 2)	EQ Designated Function (Note 3)	Safety Class (Note 4)		EQ Program Designation (Note 5)	
QKC20BR015 Drain Valve #1, Div 2	30QKC20AA405	32UJH10002	M	H	SI	S	C/NM	Y (3)	Y (5)
QKC20BR006 Drain Valve, Div 2	30QKC20AA406	32UJH01024	M	H	SI	S	C/NM	Y (3)	Y (5)
QKC20BR003 Drain Valve, Div 2	30QKC20AA409	32UJK31018	M	M	SI	S	C/NM		Y (5)
QKC20BR001 Drain Valve, Div 2	30QKC20AA410	32UJK31018	M	M	SI	S	C/NM		Y (5)
QKC20BR017 Drain Valve, Div 2	30QKC20AA412	32UJH05005	M	H	SI	S	C/NM	Y (3)	Y (5)
QKC20BR014 Drain Valve, Div 2	30QKC20AA413	32UJH10002	M	H	SI	S	C/NM	Y (3)	Y (5)
QKC20BR014 Drain Valve, Div 2	30QKC20AA414	32UJH10002	M	H	SI	S	C/NM	Y (3)	Y (5)
QKC20BR015 Drain Valve #2, Div 2	30QKC20AA415	32UJH10002	M	H	SI	S	C/NM	Y (3)	Y (5)
QKC20BR001 Vent Valve, Div 2	30QKC20AA501	32UJK31020	M	M	SI	S	C/NM		Y (5)
QKC20BR006 Vent Valve, Div 2	30QKC20AA502	32UJH01024	M	H	SI	S	C/NM	Y (3)	Y (5)
QKC20BR008 Vent Valve, Div 2	30QKC20AA503	32UJH05020	M	H	SI	S	C/NM	Y (3)	Y (5)
QKC20BR009 Vent Valve, Div 2	30QKC20AA504	32UJH05020	M	H	SI	S	C/NM	Y (3)	Y (5)
QKC20BR014 Vent Valve, Div 2	30QKC20AA505	32UJH10002	M	H	SI	S	C/NM	Y (3)	Y (5)
QKC20BR016 Vent Valve, Div 2	30QKC20AA506	32UJH05002	M	H	SI	S	C/NM	Y (3)	Y (5)
QKC20BR003 Vent Valve, Div 2	30QKC20AA507	32UJK31020	M	M	SI	S	C/NM		Y (5)
QKC20BR002 Vent Valve, Div 2	30QKC20AA508	32UJK31018	M	M	SI	S	C/NM		Y (5)
QKC20BR015 Vent Valve, Div 2	30QKC20AA509	32UJH10002	M	H	SI	S	C/NM	Y (3)	Y (5)
QKC20BR015 Vent Valve, Div 2	30QKC20AA510	32UJH10002	M	H	SI	S	C/NM	Y (3)	Y (5)
Safety Chilled Screen for SAC02, Div 2	30QKC20AT001	32UJK31018	M	M	SI	S	C/NM		Y (5)
SAC03AC001 Upstrm Isol Valve, Div 3	30QKC30AA001	33UJK31018	M	M	SI	S	C/NM		Y (5)
SAC03AC001 Flow Reg Valve, Div 3	30QKC30AA002	33UJK31018	M	M	SI	S	C/NM		Y (5)
SAC03AC001 Dnstrm Isol Valve, Div 3	30QKC30AA003	33UJK31018	M	M	SI	S	C/NM		Y (5)
SAC63AC001 Upstrm Isol Valve, Div 3	30QKC30AA004	33UJH01024	M	H	SI	S	C/NM	Y (3)	Y (5)
SAC63AC001 Dnstrm Flow Reg Valve, Div 3	30QKC30AA005	33UJH01024	M	H	SI	S	C/NM	Y (3)	Y (5)
SAC63AC001 Dnstrm Isol Valve, Div 3	30QKC30AA006	33UJH01024	M	H	SI	S	C/NM	Y (3)	Y (5)
SAC63AC002 Upstrm Isol Valve, Div 3	30QKC30AA008	33UJH05020	M	H	SI	S	C/NM	Y (3)	Y (5)
SAC63AC002 Dnstrm Flow Reg Valve, Div 3	30QKC30AA009	33UJH05020	M	H	SI	S	C/NM	Y (3)	Y (5)
SAC63AC002 Dnstrm Isol Valve, Div 3	30QKC30AA010	33UJH05020	M	H	SI	S	C/NM	Y (3)	Y (5)
KLC53AC001 Upstrm Isol Valve, Div 3	30QKC30AA011	33UJH05005	M	H	SI	S	C/NM	Y (3)	Y (5)
KLC53AC001 Dnstrm Flow Reg Valve, Div 3	30QKC30AA012	33UJH05005	M	H	SI	S	C/NM	Y (3)	Y (5)
KLC53AC001 Dnstrm Isol Valve, Div 3	30QKC30AA013	33UJH05005	M	H	SI	S	C/NM	Y (3)	Y (5)
KLC53AC002 Upstrm Isol Valve, Div 3	30QKC30AA014	33UJH10002	M	H	SI	S	C/NM	Y (3)	Y (5)
KLC53AC002 Dnstrm Flow Reg Valve, Div 3	30QKC30AA015	33UJH10002	M	H	SI	S	C/NM	Y (3)	Y (5)

Table 3.10-1—List of Seismically and Dynamically Qualified Mechanical and Electrical Equipment (Sheet 106 of 197)

Name Tag (Equipment Description)	Tag Number	Local Area KKS ID (Room Location)	EQ Environment (Note 1)	Radiation Environment Zone (Note 2)	EQ Designated Function (Note 3)		Safety Class (Note 4)		EQ Program Designation (Note 5)	
KLC53AC002 Dnstrm Isol Valve, Div 3	30QKC30AA016	33UJH10002	M	H		SI	S	C/NM	Y (3)	Y (5)
SAC03AC001 Control Valve-MOV, Div 3	30QKC30AA101	33UJK31018	M	M	ES	SI	S	C/NM		Y (5)
QKC CP501 Root Valve, Div 3	30QKC30AA301	33UJK31018	M	M		SI	S	C/NM		Y (5)
QKC CP502 Root Valve, Div 3	30QKC30AA302	33UJK31018	M	M		SI	S	C/NM		Y (5)
QKC CP503 Root Valve, Div 3	30QKC30AA303	33UJK31018	M	M		SI	S	C/NM		Y (5)
QKC CP504 Root Valve, Div 3	30QKC30AA304	33UJH01024	M	H		SI	S	C/NM	Y (3)	Y (5)
QKC CP505 Root Valve, Div 3	30QKC30AA305	33UJH01024	M	H		SI	S	C/NM	Y (3)	Y (5)
QKC CP506 Root Valve, Div 3	30QKC30AA306	33UJH01024	M	H		SI	S	C/NM	Y (3)	Y (5)
QKC CP508 Root Valve, Div 3	30QKC30AA308	33UJH05020	M	H		SI	S	C/NM	Y (3)	Y (5)
QKC CP509 Root Valve, Div 3	30QKC30AA309	33UJH05020	M	H		SI	S	C/NM	Y (3)	Y (5)
QKC CP510 Root Valve, Div 3	30QKC30AA310	33UJH05020	M	H		SI	S	C/NM	Y (3)	Y (5)
QKC CP511 Root Valve, Div 3	30QKC30AA311	33UJH05005	M	H		SI	S	C/NM	Y (3)	Y (5)
QKC CP512 Root Valve, Div 3	30QKC30AA312	33UJH05005	M	H		SI	S	C/NM	Y (3)	Y (5)
QKC CP513 Root Valve, Div 3	30QKC30AA313	33UJH05005	M	H		SI	S	C/NM	Y (3)	Y (5)
QKC CP519 Root Valve, Div 3	30QKC30AA319	33UJK31018	M	M		SI	S	C/NM		Y (5)
QKC CP520 Root Valve, Div 3	30QKC30AA320	33UJK31018	M	M		SI	S	C/NM		Y (5)
QKC CP521Root Valve, Div 3	30QKC30AA321	33UJH10002	M	H		SI	S	C/NM	Y (3)	Y (5)
QKC CP522 Root Valve, Div 3	30QKC30AA322	33UJH10002	M	H		SI	S	C/NM	Y (3)	Y (5)
QKC CP523 Root Valve, Div 3	30QKC30AA323	33UJH10002	M	H		SI	S	C/NM	Y (3)	Y (5)
QKC30BR002 Drain Valve, Div 3	30QKC30AA401	33UJK31018	M	M		SI	S	C/NM		Y (5)
QKC30BR007 Drain Valve, Div 3	30QKC30AA402	33UJH01024	M	H		SI	S	C/NM	Y (3)	Y (5)
QKC30BR008 Drain Valve, Div 3	30QKC30AA403	33UJH05020	M	H		SI	S	C/NM	Y (3)	Y (5)
QKC30BR011 Drain Valve, Div 3	30QKC30AA404	33UJH05005	M	H		SI	S	C/NM	Y (3)	Y (5)
QKC30BR036 Drain Valve #1, Div 3	30QKC30AA405	33UJH10002	M	H		SI	S	C/NM	Y (3)	Y (5)
QKC30BR006 Drain Valve, Div 3	30QKC30AA406	33UJH01024	M	H		SI	S	C/NM	Y (3)	Y (5)
QKC30BR001 Drain Valve, Div 3	30QKC30AA407	33UJK31018	M	M		SI	S	C/NM		Y (5)
QKC30BR003 Drain Valve, Div 3	30QKC30AA408	33UJK31018	M	M		SI	S	C/NM		Y (5)
QKC30BR037 Drain Valve #1, Div 3	30QKC30AA409	33UJH10002	M	H		SI	S	C/NM	Y (3)	Y (5)
QKC30BR037 Drain Valve #2, Div 3	30QKC30AA410	33UJH10002	M	H		SI	S	C/NM	Y (3)	Y (5)
QKC30BR010 Drain Valve, Div 3	30QKC30AA411	33UJH05005	M	H		SI	S	C/NM	Y (3)	Y (5)
QKC30BR036 Drain Valve #2, Div 3	30QKC30AA412	33UJH10002	M	H		SI	S	C/NM	Y (3)	Y (5)
QKC30BR001 Vent Valve, Div 3	30QKC30AA501	33UJK31018	M	M		SI	S	C/NM		Y (5)
QKC30BR006 Vent Valve, Div 3	30QKC30AA502	33UJH01024	M	H		SI	S	C/NM	Y (3)	Y (5)

Table 3.10-1—List of Seismically and Dynamically Qualified Mechanical and Electrical Equipment (Sheet 107 of 197)

Name Tag (Equipment Description)	Tag Number	Local Area KKS ID (Room Location)	EQ Environment (Note 1)	Radiation Environment Zone (Note 2)	EQ Designated Function (Note 3)	Safety Class (Note 4)		EQ Program Designation (Note 5)	
QKC30BR008 Vent Valve, Div 3	30QKC30AA503	33UJH05020	M	H	SI	S	C/NM	Y (3)	Y (5)
QKC30BR037 Vent Valve, Div 3	30QKC30AA505	33UJH10002	M	H	SI	S	C/NM	Y (3)	Y (5)
QKC30BR036 Vent Valve, Div 3	30QKC30AA507	33UJH10002	M	H	SI	S	C/NM	Y (3)	Y (5)
QKC30BR011 Vent Valve, Div 3	30QKC30AA508	33UJH05002	M	H	SI	S	C/NM	Y (3)	Y (5)
QKC30BR036 Vent Valve, Div 3	30QKC30AA509	33UJH10002	M	H	SI	S	C/NM	Y (3)	Y (5)
Safety Chilled Screen for SAC03, Div 3	30QKC30AT001	33UJK31018	M	M	SI	S	C/NM		Y (5)
SAC04AC001 Upstrm Isol Valve, Div 4	30QKC40AA001	34UJK22028	M	M	SI	S	C/NM		Y (5)
SAC04AC001 Dnstrm Flow Reg Valve, Div 4	30QKC40AA002	34UJK26029	M	M	SI	S	C/NM		Y (5)
SAC04AC001 Dnstrm Isol Valve, Div 4	30QKC40AA003	34UJK26029	M	M	SI	S	C/NM		Y (5)
SAC64AC001 Upstrm Isol Valve, Div 4	30QKC40AA004	34UJH01024	M	H	SI	S	C/NM	Y (3)	Y (5)
SAC64AC001 Dnstrm Flow Reg Valve, Div 4	30QKC40AA005	34UJH01024	M	H	SI	S	C/NM	Y (3)	Y (5)
SAC64AC001 Dnstrm Isol Valve, Div 4	30QKC40AA006	34UJH01024	M	H	SI	S	C/NM	Y (3)	Y (5)
SAC64AC002 Upstrm Isol Valve, Div 4	30QKC40AA008	34UJH01026	M	H	SI	S	C/NM	Y (3)	Y (5)
SAC64AC002 Dnstrm Flow Reg Valve, Div 4	30QKC40AA009	34UJH01026	M	H	SI	S	C/NM	Y (3)	Y (5)
SAC64AC002 Dnstrm Isol Valve, Div 4	30QKC40AA010	34UJH01026	M	H	SI	S	C/NM	Y (3)	Y (5)
KLC54AC001 Upstrm Isol Valve, Div 4	30QKC40AA011	34UJH10002	M	H	SI	S	C/NM	Y (3)	Y (5)
KLC54AC001 Dnstrm Flow Reg Valve, Div 4	30QKC40AA012	34UJH10002	M	H	SI	S	C/NM	Y (3)	Y (5)
KLC54AC001 Dnstrm Isol Valve, Div 4	30QKC40AA013	34UJH10002	M	H	SI	S	C/NM	Y (3)	Y (5)
KLC54AC003 Upstrm Isol Valve, Div 4	30QKC40AA014	34UJH10011	M	H	SI	S	C/NM	Y (3)	Y (5)
KLC54AC003 Dnstrm Flow Reg Valve, Div 4	30QKC40AA015	34UJH10011	M	H	SI	S	C/NM	Y (3)	Y (5)
KLC54AC003 Dnstrm Isol Valve, Div 4	30QKC40AA016	34UJH10011	M	H	SI	S	C/NM	Y (3)	Y (5)
KLC54AC002 Upstrm Isol Valve, Div 4	30QKC40AA017	34UJH10002	M	H	SI	S	C/NM	Y (3)	Y (5)
KLC54AC002 Dnstrm Flow Reg Valve, Div 4	30QKC40AA018	34UJH10002	M	H	SI	S	C/NM	Y (3)	Y (5)
KLC54AC002 Dnstrm Isol Valve, Div 4	30QKC40AA019	34UJH10002	M	H	SI	S	C/NM	Y (3)	Y (5)
JNG40AP001 Dnstrm Isol Valve, Div 4	30QKC40AA020	34UJH01001	M	H	SI	S	C/NM	Y (3)	Y (5)
JNG40AP001 Upstrm Isol Valve, Div 4	30QKC40AA021	34UJH01001	M	H	SI	S	C/NM	Y (3)	Y (5)
JNG40AP001 Dnstrm Flow Reg Valve, Div 4	30QKC40AA022	34UJH01001	M	H	SI	S	C/NM	Y (3)	Y (5)
LHSI Pmp Upstrm Control Valve-MOV, Div 4	30QKC40AA025	34UJH01001	M	H	ES SI	S	C/NM	Y (3)	Y (5)
LHSI Pmp Mtr Dnstrm Flow Reg Vlv, Div 4	30QKC40AA026	34UJH01001	M	H	SI	S	C/NM	Y (3)	Y (5)
LHSI Pmp Seal Dnstrm Flow Reg Vlv, Div 4	30QKC40AA027	34UJH01001	M	H	SI	S	C/NM	Y (3)	Y (5)
LHSI Pmp Seal Dnstrm Check Vlv, Div 4	30QKC40AA028	34UJH01001	M	H	SI	S	C/NM	Y (3)	Y (5)
SAC04AC001 Control Valve-MOV, Div 4	30QKC40AA101	34UJK26029	M	M	ES SI	S	C/NM		Y (5)
QKC CP501 Root Valve, Div 4	30QKC40AA301	34UJK22028	M	M	SI	S	C/NM		Y (5)

Table 3.10-1—List of Seismically and Dynamically Qualified Mechanical and Electrical Equipment (Sheet 108 of 197)

Name Tag (Equipment Description)	Tag Number	Local Area KKS ID (Room Location)	EQ Environment (Note 1)	Radiation Environment Zone (Note 2)	EQ Designated Function (Note 3)	Safety Class (Note 4)		EQ Program Designation (Note 5)	
QKC CP502 Root Valve, Div 4	30QKC40AA302	34UJK26029	M	M	SI	S	C/NM		Y (5)
QKC CP503 Root Valve, Div 4	30QKC40AA303	34UJK26029	M	M	SI	S	C/NM		Y (5)
QKC CP504 Root Valve, Div 4	30QKC40AA304	34UJH01024	M	H	SI	S	C/NM	Y (3)	Y (5)
QKC CP505 Root Valve, Div 4	30QKC40AA305	34UJH01024	M	H	SI	S	C/NM	Y (3)	Y (5)
QKC CP506 Root Valve, Div 4	30QKC40AA306	34UJH01024	M	H	SI	S	C/NM	Y (3)	Y (5)
QKC CP508 Root Valve, Div 4	30QKC40AA308	34UJH01026	M	H	SI	S	C/NM	Y (3)	Y (5)
QKC CP509 Root Valve, Div 4	30QKC40AA309	34UJH01026	M	H	SI	S	C/NM	Y (3)	Y (5)
QKC CP510 Root Valve, Div 4	30QKC40AA310	34UJH01026	M	H	SI	S	C/NM	Y (3)	Y (5)
QKC CP511 Root Valve, Div 4	30QKC40AA311	34UJH10002	M	H	SI	S	C/NM	Y (3)	Y (5)
QKC CP512 Root Valve, Div 4	30QKC40AA312	34UJH10002	M	H	SI	S	C/NM	Y (3)	Y (5)
QKC CP513 Root Valve, Div 4	30QKC40AA313	34UJH10002	M	H	SI	S	C/NM	Y (3)	Y (5)
QKC CP519 Root Valve, Div 4	30QKC40AA319	34UJK26029	M	M	SI	S	C/NM		Y (5)
QKC CP520 Root Valve, Div 4	30QKC40AA320	34UJK26029	M	M	SI	S	C/NM		Y (5)
QKC CP521 Root Valve, Div 4	30QKC40AA321	34UJH10011	M	H	SI	S	C/NM	Y (3)	Y (5)
QKC CP522 Root Valve, Div 4	30QKC40AA322	34UJH10011	M	H	SI	S	C/NM	Y (3)	Y (5)
QKC CP523 Root Valve, Div 4	30QKC40AA323	34UJH10011	M	H	SI	S	C/NM	Y (3)	Y (5)
QKC CP524 Root Valve, Div 4	30QKC40AA324	34UJH10002	M	H	SI	S	C/NM	Y (3)	Y (5)
QKC CP525 Root Valve, Div 4	30QKC40AA325	34UJH10002	M	H	SI	S	C/NM	Y (3)	Y (5)
QKC CP526 Root Valve, Div 4	30QKC40AA326	34UJH10002	M	H	SI	S	C/NM	Y (3)	Y (5)
QKC CP527 Root Valve, Div 4	30QKC40AA327	34UJH01001	M	H	SI	S	C/NM	Y (3)	Y (5)
QKC CP528 Root Valve, Div 4	30QKC40AA328	34UJH01001	M	H	SI	S	C/NM	Y (3)	Y (5)
QKC CP529 Root Valve, Div 4	30QKC40AA329	34UJH01001	M	H	SI	S	C/NM	Y (3)	Y (5)
QKC40BR002 Drain Valve, Div 4	30QKC40AA401	34UJK22028	M	M	SI	S	C/NM		Y (5)
QKC40BR023 Drain Valve, Div 4	30QKC40AA402	34UJH01024	M	H	SI	S	C/NM	Y (3)	Y (5)
QKC40BR009 Drain Valve #1, Div 4	30QKC40AA403	34UJH01026	M	H	SI	S	C/NM	Y (3)	Y (5)
QKC40BR021 Drain Valve, Div 4	30QKC40AA404	34UJH10002	M	H	SI	S	C/NM	Y (3)	Y (5)
QKC40BR019 Drain Valve, Div 4	30QKC40AA406	34UJH10002	M	H	SI	S	C/NM	Y (3)	Y (5)
QKC40BR011 Drain Valve, Div 4	30QKC40AA407	34UJH01001	M	H	SI	S	C/NM	Y (3)	Y (5)
QKC40BR010 Drain Valve, Div 4	30QKC40AA408	34UJH01001	M	H	SI	S	C/NM	Y (3)	Y (5)
QKC40BR009 Drain Valve #2, Div 4	30QKC40AA409	34UJH01026	M	H	SI	S	C/NM	Y (3)	Y (5)
QKC40BR008 Drain Valve, Div 4	30QKC40AA410	34UJH01026	M	H	SI	S	C/NM	Y (3)	Y (5)
QKC40BR022 Drain Valve, Div 4	30QKC40AA411	34UJH01024	M	H	SI	S	C/NM	Y (3)	Y (5)
QKC40BR004 Drain Valve, Div 4	30QKC40AA412	34UJH01001	M	H	SI	S	C/NM	Y (3)	Y (5)

Table 3.10-1—List of Seismically and Dynamically Qualified Mechanical and Electrical Equipment (Sheet 109 of 197)

Name Tag (Equipment Description)	Tag Number	Local Area KKS ID (Room Location)	EQ Environment (Note 1)	Radiation Environment Zone (Note 2)	EQ Designated Function (Note 3)	Safety Class (Note 4)		EQ Program Designation (Note 5)	
QKC40BR005 Drain Valve, Div 4	30QKC40AA413	34UJH01001	M	H	SI	S	C/NM	Y (3)	Y (5)
QKC40BR001 Vent Valve, Div 4	30QKC40AA501	34UJK22028	M	M	SI	S	C/NM		Y (5)
QKC40BR022 Vent Valve, Div 4	30QKC40AA502	34UJH01024	M	H	SI	S	C/NM	Y (3)	Y (5)
QKC40BR009 Vent Valve, Div 4	30QKC40AA503	34UJH01026	M	H	SI	S	C/NM	Y (3)	Y (5)
QKC40BR020 Vent Valve, Div 4	30QKC40AA504	34UJH10002	M	H	SI	S	C/NM	Y (3)	Y (5)
QKC40BR017 Vent Valve, Div 4	30QKC40AA505	34UJH10011	M	H	SI	S	C/NM	Y (3)	Y (5)
QKC40BR018 Vent Valve, Div 4	30QKC40AA506	34UJH10002	M	H	SI	S	C/NM	Y (3)	Y (5)
QKC40BR002 Vent Valve, Div 4	30QKC40AA510	34UJK26029	M	M	SI	S	C/NM		Y (5)
QKC40BR023 Vent Valve, Div 4	30QKC40AA511	34UJH01024	M	H	SI	S	C/NM	Y (3)	Y (5)
QKC40BR005 Vent Valve, Div 4	30QKC40AA512	34UJH01001	M	H	SI	S	C/NM	Y (3)	Y (5)
QKC40BR043 Vent Valve, Div 4	30QKC40AA520	34UJH01001	M	H	SI	S	C/NM	Y (3)	Y (5)
Safety Chilled Screen for SAC04, Div 4	30QKC40AT001	34UJK26029	M	M	SI	S	C/NM		Y (5)
KLL61AC001 Upstrm Isol Valve, Div 1	30QKF10AA001	30UFA01038	M	H	SI	S	C/NM	Y (3)	Y (5)
KLL61AC001 Dnstrm Flow Reg Valve, Div 1	30QKF10AA002	30UFA01038	M	H	SI	S	C/NM	Y (3)	Y (5)
KLL61AC001 Dnstrm Isol Valve, Div 1	30QKF10AA003	30UFA01038	M	H	SI	S	C/NM	Y (3)	Y (5)
QKF CP501 Root Valve, Div 1	30QKF10AA301	30UFA01038	M	H	SI	S	C/NM	Y (3)	Y (5)
QKF CP502 Root Valve, Div 1	30QKF10AA302	30UFA01038	M	H	SI	S	C/NM	Y (3)	Y (5)
QKF CP503 Root Valve, Div 1	30QKF10AA303	30UFA01038	M	H	SI	S	C/NM	Y (3)	Y (5)
QKF10BR002 Drain Valve, Div 1	30QKF10AA401	30UFA01038	M	H	SI	S	C/NM	Y (3)	Y (5)
QKF10BR001 Drain Valve, Div 1	30QKF10AA402	30UFA01038	M	H	SI	S	C/NM	Y (3)	Y (5)
QKC10BR030 Drain Valve, Div 1	30QKF10AA403	31UJH01001	M	H	SI	S	C/NM	Y (3)	Y (5)
QKC10BR026 Drain Valve, Div 1	30QKF10AA404	31UJH01001	M	H	SI	S	C/NM	Y (3)	Y (5)
QKF10BR001 Vent Valve, Div 1	30QKF10AA501	30UFA01038	M	H	SI	S	C/NM	Y (3)	Y (5)
QKF10BR002 Vent Valve, Div 1	30QKF10AA502	30UFA01038	M	H	SI	S	C/NM	Y (3)	Y (5)
KLL64AC001 Upstrm Isol Valve, Div 4	30QKF40AA001	30UFA01088	M	H	SI	S	C/NM	Y (3)	Y (5)
KLL64AC001 Dnstrm Flow Reg Valve, Div 4	30QKF40AA002	30UFA01088	M	H	SI	S	C/NM	Y (3)	Y (5)
KLL64AC001 Dnstrm Isol Valve, Div 4	30QKF40AA003	30UFA01088	M	H	SI	S	C/NM	Y (3)	Y (5)
QKF CP501 Root Valve, Div 4	30QKF40AA301	30UFA01088	M	H	SI	S	C/NM	Y (3)	Y (5)
QKF CP502 Root Valve, Div 4	30QKF40AA302	30UFA01088	M	H	SI	S	C/NM	Y (3)	Y (5)
QKF CP503 Root Valve, Div 4	30QKF40AA303	30UFA01088	M	H	SI	S	C/NM	Y (3)	Y (5)
QKF40BR002 Drain Valve #1, Div 4	30QKF40AA401	30UFA01088	M	H	SI	S	C/NM	Y (3)	Y (5)
QKF40BR001 Drain Valve, Div 4	30QKF40AA402	30UFA01088	M	H	SI	S	C/NM	Y (3)	Y (5)
QKF40BR002 Drain Valve #2, Div 4	30QKF40AA403	30UFA01088	M	H	SI	S	C/NM	Y (3)	Y (5)

Table 3.10-1—List of Seismically and Dynamically Qualified Mechanical and Electrical Equipment (Sheet 110 of 197)

Name Tag (Equipment Description)	Tag Number	Local Area KKS ID (Room Location)	EQ Environment (Note 1)	Radiation Environment Zone (Note 2)	EQ Designated Function (Note 3)			Safety Class (Note 4)		EQ Program Designation (Note 5)		
QKC40BR026 Drain Valve, Div 4	30QKF40AA404	34UJH01001	M	H			SI	S	C/NM	Y (3)		Y (5)
QKF40BR001 Vent Valve, Div 4	30QKF40AA501	30UFA01088	M	H			SI	S	C/NM	Y (3)		Y (5)
QKF40BR002 Vent Valve, Div 4	30QKF40AA502	30UFA01088	M	H			SI	S	C/NM	Y (3)		Y (5)
Extra Borating System (EBS)												
EBS Tank Iso Valve	30JDH10AA001	30UFA06039	M	H	ES		SI	S	C/NM	Y (3)		Y (5)
EBS Pump Suction Iso Valve	30JDH10AA002	30UFA01038	M	H	ES		SI	S	C/NM	Y (3)		Y (5)
EBS Pump Discharge Iso Valve	30JDH10AA005	30UFA01038	M	H	ES		SI	S	C/NM	Y (3)		Y (5)
EBS Outside Cont Iso Valve	30JDH10AA006	30UFA10045	M	H	ES	PAM	SI	S	C/NM	Y (3)		Y (5)
EBS Inside Cont Iso Valve	30JDH10AA007	30UJA11013	H	H	ES		SI	S				Y (5)
EBS Test Line Iso Valve	30JDH10AA008	30UFA01038	M	H			SI	S	C/NM	Y (3)		Y (5)
EBS Test Line Iso Manual Valve	30JDH10AA009	30UFA01038	M	H			SI	S	C/NM	Y (3)		Y (5)
EBS Tank Refill Line Check Valve	30JDH10AA011	30UFA01038	M	H			SI	S				Y (5)
EBS Tank Refill Line Iso Valve	30JDH10AA012	30UFA01038	M	H			SI	S	C/NM	Y (3)		Y (5)
EBS RCS Iso Valve	30JDH10AA015	30UJA11003	H	H	ES		SI	S	C/NM		Y (4)	Y (5)
EBS Suction Interconnect Valve	30JDH10AA016	30UFA01038	M	H	ES		SI	S	C/NM	Y (3)		Y (5)
EBS IRWST Suction Line Iso Valve	30JDH10AA022	30UFA01083	M	H			SI	S	C/NM	Y (3)		Y (5)
EBS VCT Suction Line Iso Valve	30JDH10AA052	30UFA01083	M	H			SI	S	C/NM	Y (3)		Y (5)
EBS RCS Hydrotest Line Iso Valve	30JDH10AA053	30UFA01083	M	H			SI	S	C/NM	Y (3)		Y (5)
EBS Pump Discharge Safety Valve	30JDH10AA191	30UFA01038	M	H	ES		SI	S	C/NM	Y (3)		Y (5)
EBS Pump	30JDH10AP001	30UFA01038	M	H	ES		SI	S	C/NM	Y (3)		Y (5)
EBS Tank	30JDH10BB001	30UFA06038	M	H	ES		SI	S				Y (5)
EBS Flow Meter	30JDH10CF058	30UFA01038	M	H	ES	PAM	SI	S	C/NM	Y (3)		Y (5)
EBS Tank Iso Valve Position Inst	30JDH10CG001A	30UFA01038	M	H			SII	NS-AQ	C/NM	Y (3)		Y (5)
EBS Test Line Iso Man Vlv Position Inst	30JDH10CG009A	30UFA01038	M	H			SII	NS-AQ	C/NM	Y (3)		Y (5)
EBS Test Line Iso Man Vlv Position Inst	30JDH10CG009B	30UFA01038	M	H			SII	NS-AQ	C/NM	Y (3)		Y (5)
EBS Suction Interconnect Vlv Position Inst	30JDH10CG016A	30UFA01038	M	H			SII	NS-AQ	C/NM	Y (3)		Y (5)
EBS Suction Interconnect Vlv Position Inst	30JDH10CG016B	30UFA01038	M	H			SII	NS-AQ	C/NM	Y (3)		Y (5)
EBS Tank Level Inst	30JDH10CL050	30UFA06039	M	H	ES		SI	S	C/NM	Y (3)		Y (5)
EBS Tank Level Inst	30JDH10CL060	30UFA06039	M	H	ES		SI	S	C/NM	Y (3)		Y (5)
EBS Pump Suction Pressure Inst	30JDH10CP054	30UFA01038	M	H	ES		SI	S	C/NM	Y (3)		Y (5)
EBS Pump Discharge Pressure Inst	30JDH10CP056	30UFA01038	M	H	ES		SI	S	C/NM	Y (3)		Y (5)
EBS Tank Temperature Inst	30JDH10CT052	30UFA06039	M	H	ES		SI	S	C/NM	Y (3)		Y (5)
EBS Tank Temperature Inst	30JDH10CT062	30UFA06039	M	H	ES		SI	S	C/NM	Y (3)		Y (5)

Table 3.10-1—List of Seismically and Dynamically Qualified Mechanical and Electrical Equipment (Sheet 111 of 197)

Name Tag (Equipment Description)	Tag Number	Local Area KKS ID (Room Location)	EQ Environment (Note 1)	Radiation Environment Zone (Note 2)	EQ Designated Function (Note 3)			Safety Class (Note 4)		EQ Program Designation (Note 5)	
EBS RCS Iso Valve	30JDH20AA015	30UJA11005	H	H	ES		SI	S	C/NM	Y (4)	Y (5)
EBS Thermal Relief Valve	30JDH20AA194	30UJA11013	H	H			SI	S			Y (5)
EBS RCS Iso Valve	30JDH30AA015	30UJA11006	H	H	ES		SI	S	C/NM	Y (4)	Y (5)
EBS Thermal Relief Valve	30JDH30AA194	30UJA11016	H	H			SI	S			Y (5)
EBS Tank Iso Valve	30JDH40AA001	30UFA06087	M	H	ES		SI	S	C/NM	Y (3)	Y (5)
EBS Pump Suction Iso Valve	30JDH40AA002	30UFA01088	M	H	ES		SI	S	C/NM	Y (3)	Y (5)
EBS Pump Discharge Iso Valve	30JDH40AA005	30UFA01088	M	H	ES		SI	S	C/NM	Y (3)	Y (5)
EBS Outside Cont Iso Valve	30JDH40AA006	30UFA10095	M	H	ES	PAM	SI	S	C/NM	Y (3)	Y (5)
EBS Inside Cont Iso Valve	30JDH40AA007	30UJA11016	H	H	ES		SI	S			Y (5)
EBS Test Line Iso Valve	30JDH40AA008	30UFA01088	M	H			SI	S	C/NM	Y (3)	Y (5)
EBS Test Line Iso Manual Valve	30JDH40AA009	30UFA01088	M	H			SI	S	C/NM	Y (3)	Y (5)
EBS Tank Refill Line Tank Check Valve	30JDH40AA011	30UFA01088	M	H			SI	S			Y (5)
EBS Tank Refill Line Tank Iso Valve	30JDH40AA012	30UFA01088	M	H			SI	S	C/NM	Y (3)	Y (5)
EBS RCS Iso Valve	30JDH40AA015	30UJA11008	H	H	ES		SI	S	C/NM	Y (4)	Y (5)
EBS Suction Interconnect Valve	30JDH40AA016	30UFA01088	M	H	ES		SI	S	C/NM	Y (3)	Y (5)
EBS Pump Discharge Safety Valve	30JDH40AA191	30UFA01088	M	H	ES		SI	S	C/NM	Y (3)	Y (5)
EBS Pump	30JDH40AP001	30UFA01088	M	H	ES		SI	S	C/NM	Y (3)	Y (5)
EBS Tank	30JDH40BB001	30UFA06088	M	H	ES		SI	S			Y (5)
EBS Flow Meter	30JDH40CF058	30UFA01088	M	H	ES	PAM	SI	S	C/NM	Y (3)	Y (5)
EBS Tank Iso Valve Position Inst	30JDH40CG001A	30UFA01088	M	H			SII	NS-AQ	C/NM	Y (3)	Y (5)
EBS Test Line Iso Man Vlv Position Inst	30JDH40CG009A	30UFA01088	M	H			SII	NS-AQ	C/NM	Y (3)	Y (5)
EBS Test Line Iso Man Vlv Position Inst	30JDH40CG009B	30UFA01088	M	H			SII	NS-AQ	C/NM	Y (3)	Y (5)
EBS Suction Interconnect Vlv Position Inst	30JDH40CG016A	30UFA01088	M	H			SII	NS-AQ	C/NM	Y (3)	Y (5)
EBS Suction Interconnect Vlv Position Inst	30JDH40CG016B	30UFA01088	M	H			SII	NS-AQ	C/NM	Y (3)	Y (5)
EBS Tank Level Inst	30JDH40CL050	30UFA06087	M	H	ES		SI	S	C/NM	Y (3)	Y (5)
EBS Tank Level Inst	30JDH40CL060	30UFA06087	M	H	ES		SI	S	C/NM	Y (3)	Y (5)
EBS Pump Suction Pressure Inst	30JDH40CP054	30UFA01088	M	H	ES		SI	S	C/NM	Y (3)	Y (5)
EBS Pump Discharge Pressure Inst	30JDH40CP056	30UFA01088	M	H	ES		SI	S	C/NM	Y (3)	Y (5)
EBS Tank Temperature Inst	30JDH40CT052	30UFA06087	M	H	ES		SI	S	C/NM	Y (3)	Y (5)
EBS Tank Temperature Inst	30JDH40CT062	30UFA06087	M	H	ES		SI	S	C/NM	Y (3)	Y (5)
Feedwater System (MFWS)											
MFW1 Ful Ld I-V	30LAB60AA001	31UJE26001	H	H			SI	S	C/NM	Y (4)	Y (5)
MFW1 I-V	30LAB60AA002	31UJE26001	H	H	ES	PAM	SI	S	C/NM	Y (4)	Y (5)

Table 3.10-1—List of Seismically and Dynamically Qualified Mechanical and Electrical Equipment (Sheet 112 of 197)

Name Tag (Equipment Description)	Tag Number	Local Area KKS ID (Room Location)	EQ Environment (Note 1)	Radiation Environment Zone (Note 2)	EQ Designated Function (Note 3)			Safety Class (Note 4)		EQ Program Designation (Note 5)	
MFW1 Ck-V	30LAB60AA003	30UJA29003	H	H	ES		SI	S			Y (5)
MFW1 Ful Ld C-V	30LAB60AA101	31UJE26001	H	H			SI	S	C/NM	Y (4)	Y (5)
MFW1 P I-V	30LAB60AA307	31UJE26001	H	H			SI	S			Y (5)
MFW1 Ful Ld DP I-V1	30LAB60AA309	31UJE26001	H	H			SI	S			Y (5)
MFW1 Ful Ld DP I-V2	30LAB60AA310	31UJE26001	H	H			SI	S			Y (5)
MFW1 D-V1	30LAB60AA401	31UJE26001	H	H			SI	S			Y (5)
MFW1 D-V2	30LAB60AA403	30UJA29003	H	H			SI	S			Y (5)
MFW1 V-V1	30LAB60AA501	31UJE26001	H	H			SI	S			Y (5)
P MFW1 ATP	30LAB60CP407	31UJK26030	M	M			SI	S			Y (5)
T1 MFW1 Dnstr Fix Pt	30LAB60CT708	31UJK26030	M	M			SI	S			Y (5)
MFW1 LLD I-V	30LAB64AA001	31UJE26001	H	H			SI	S	C/NM	Y (4)	Y (5)
MFW1 LLD C-V	30LAB64AA101	31UJE26001	H	H			SI	S	C/NM	Y (4)	Y (5)
MFW1 VLLD C-V	30LAB64AA102	31UJE26001	H	H			SI	S	C/NM	Y (4)	Y (5)
MFW1 LLD DP I-V1	30LAB64AA301	31UJE26001	H	H			SI	S			Y (5)
MFW1 LLD DP I-V2	30LAB64AA302	31UJE26001	H	H			SI	S			Y (5)
MFW2 Ful Ld I-V	30LAB70AA001	32UJE26001	H	H			SI	S	C/NM	Y (4)	Y (5)
MFW2 I-V	30LAB70AA002	32UJE26001	H	H	ES	PAM	SI	S	C/NM	Y (4)	Y (5)
MFW2 Ck-V	30LAB70AA003	30UJA29004	H	H	ES		SI	S			Y (5)
MFW2 Ful Ld C-V	30LAB70AA101	32UJE26001	H	H			SI	S	C/NM	Y (4)	Y (5)
MFW2 P I-V	30LAB70AA307	32UJE26001	H	H			SI	S			Y (5)
MFW2 Ful Ld DP I-V1	30LAB70AA309	32UJE26001	H	H			SI	S			Y (5)
MFW2 Ful Ld DP I-V2	30LAB70AA310	32UJE26001	H	H			SI	S			Y (5)
MFW2 D-V1	30LAB70AA401	32UJE26001	H	H			SI	S			Y (5)
MFW2 D-V2	30LAB70AA403	30UJA29004	H	H			SI	S			Y (5)
MFW2 V-V1	30LAB70AA501	32UJE26001	H	H			SI	S			Y (5)
P MFW2 ATP	30LAB70CP407	32UJE26001	M	M			SI	S			Y (5)
MFW2 LLD I-V	30LAB74AA001	32UJE26001	H	H			SI	S	C/NM	Y (4)	Y (5)
MFW2 LLD C-V	30LAB74AA101	32UJE26001	H	H			SI	S	C/NM	Y (4)	Y (5)
MFW2 VLLD C-V	30LAB74AA102	32UJE26001	H	H			SI	S	C/NM	Y (4)	Y (5)
MFW2 LLD DP I-V1	30LAB74AA301	32UJE26001	H	H			SI	S			Y (5)
MFW2 LLD DP I-V2	30LAB74AA302	32UJE26001	H	H			SI	S			Y (5)
MFW3 Ful Ld I-V	30LAB80AA001	33UJE26001	H	H			SI	S	C/NM	Y (4)	Y (5)
MFW3 I-V	30LAB80AA002	33UJE26001	H	H	ES	PAM	SI	S	C/NM	Y (4)	Y (5)

Table 3.10-1—List of Seismically and Dynamically Qualified Mechanical and Electrical Equipment (Sheet 113 of 197)

Name Tag (Equipment Description)	Tag Number	Local Area KKS ID (Room Location)	EQ Environment (Note 1)	Radiation Environment Zone (Note 2)	EQ Designated Function (Note 3)	Safety Class (Note 4)	EQ Program Designation (Note 5)
MFW3 CK-V	30LAB80AA003	30UJA29007	H	H	ES SI	S	Y (5)
MFW3 Ful Ld C-V	30LAB80AA101	33UJE26001	H	H	SI	S C/NM	Y (4) Y (5)
MFW3 P I-V	30LAB80AA307	33UJE26001	H	H	SI	S	Y (5)
MFW3 Ful Ld DP I-V1	30LAB80AA309	33UJE26001	H	H	SI	S	Y (5)
MFW3 Ful Ld DP I-V2	30LAB80AA310	33UJE26001	H	H	SI	S	Y (5)
MFW3 D-V1	30LAB80AA401	33UJE26001	H	H	SI	S	Y (5)
MFW3 D-V2	30LAB80AA403	30UJA29007	H	H	SI	S	Y (5)
MFW3 V-V1	30LAB80AA501	33UJE26001	H	H	SI	S	Y (5)
MFW3 LLD I-V	30LAB84AA001	33UJE26001	H	H	SI	S C/NM	Y (4) Y (5)
MFW3 LLD C-V	30LAB84AA101	33UJE26001	H	H	SI	S C/NM	Y (4) Y (5)
MFW3 VLLD C-V	30LAB84AA102	33UJE26001	H	H	SI	S C/NM	Y (4) Y (5)
MFW3 LLD DP I-V1	30LAB84AA301	33UJE26001	H	H	SI	S	Y (5)
MFW3 LLD DP I-V2	30LAB84AA302	33UJE26001	H	H	SI	S	Y (5)
MFW4 Ful Ld I-V	30LAB90AA001	34UJE26001	H	H	SI	S C/NM	Y (4) Y (5)
MFW4 I-V	30LAB90AA002	34UJE26001	H	H	ES PAM SI	S C/NM	Y (4) Y (5)
MFW4 Ck-V	30LAB90AA003	30UJA29008	H	H	ES SI	S	Y (5)
MFW4 Ful Ld C-V	30LAB90AA101	34UJE26001	H	H	SI	S C/NM	Y (4) Y (5)
MFW4 P I-V	30LAB90AA307	34UJE26001	H	H	SI	S	Y (5)
MFW4 Ful Ld DP I-V1	30LAB90AA309	34UJE26001	H	H	SI	S	Y (5)
MFW4 Ful Ld DP I-V2	30LAB90AA310	34UJE26001	H	H	SI	S	Y (5)
MFW4 D-V1	30LAB90AA401	34UJE26001	H	H	SI	S	Y (5)
MFW4 D-V2	30LAB90AA403	30UJA29008	H	H	SI	S	Y (5)
MFW4 V-V1	30LAB90AA501	34UJE26001	H	H	SI	S	Y (5)
P MFW4 ATP	30LAB90CP407	34UJK26030	M	M	SI	S	Y (5)
T1 MFW4 Dnstr Fix Pt	30LAB90CT708	34UJK26030	M	M	SI	S	Y (5)
MFW4 LLD I-V	30LAB94AA001	34UJE26001	H	H	SI	S C/NM	Y (4) Y (5)
MFW4 LLD C-V	30LAB94AA101	34UJE26001	H	H	SI	S C/NM	Y (4) Y (5)
MFW4 VLLD C-V	30LAB94AA102	34UJE26001	H	H	SI	S C/NM	Y (4) Y (5)
MFW4 LLD DP I-V1	30LAB94AA301	34UJE26001	H	H	SI	S	Y (5)
MFW4 LLD DP I-V2	30LAB94AA302	34UJE26001	H	H	SI	S	Y (5)
Emergency Feedwater System (EFWS)							
EFW Supply Header Vent/Drain Valve	30LAR01AA401	31UJH01024	M	H	ES SI	S C/NM	Y (3) Y (5)
EFW Supply Header Vent/Drain Valve	30LAR01AA501	31UJH01002	M	H	ES SI	S C/NM	Y (3) Y (5)

Table 3.10-1—List of Seismically and Dynamically Qualified Mechanical and Electrical Equipment (Sheet 114 of 197)

Name Tag (Equipment Description)	Tag Number	Local Area KKS ID (Room Location)	EQ Environment (Note 1)	Radiation Environment Zone (Note 2)	EQ Designated Function (Note 3)		Safety Class (Note 4)		EQ Program Designation (Note 5)	
EFW Supply Header Vent/Drain Valve	30LAR02AA401	32UJH01024	M	H	ES	SI	S	C/NM	Y (3)	Y (5)
EFW Supply Header Vent/Drain Valve	30LAR03AA401	33UJH01038	M	H	ES	SI	S	C/NM	Y (3)	Y (5)
EFW Demineralized Water Isolation Valve	30LAR04AA001	34UJH01024	M	H	ES	SI	S	C/NM	Y (3)	Y (5)
EFW Demineralized Water Check Valve	30LAR04AA002	34UJH01024	M	H	ES	SI	S	C/NM	Y (3)	Y (5)
EFW Supply Header Vent/Drain Valve	30LAR04AA401	34UJH01024	M	H	ES	SI	S	C/NM	Y (3)	Y (5)
EFW Supply Header Vent/Drain Valve	30LAR04AA501	34UJH01002	M	H	ES	SI	S	C/NM	Y (3)	Y (5)
EFW Storage Pool Offsite Filling Valve Train 1	30LAR10AA001	31UJH10026	M	H	ES	SI	S	C/NM	Y (3)	Y (5)
EFW Local Level Gauge Isolation Valve Train 1	30LAR10AA303	31UJH05026	M	H	ES	SI	S	C/NM	Y (3)	Y (5)
EFW Storage Pool Instrument Isolation Valve	30LAR10AA311	31UJH10026	M	H	ES	SI	S	C/NM	Y (3)	Y (5)
EFW Storage Pool Instrument Isolation Valve	30LAR10AA312	31UJH05026	M	H	ES	SI	S	C/NM	Y (3)	Y (5)
EFW Storage Pool Instrument Isolation Valve	30LAR10AA313	31UJH10026	M	H	ES	SI	S	C/NM	Y (3)	Y (5)
EFW Storage Pool Instrument Isolation Valve	30LAR10AA314	31UJH10026	M	H	ES	SI	S	C/NM	Y (3)	Y (5)
EFW Storage Pool Instrument Isolation Valve	30LAR10AA315	31UJH10026	M	H	ES	SI	S	C/NM	Y (3)	Y (5)
EFW Storage Pool Instrument Isolation Valve	30LAR10AA316	31UJH05026	M	H	ES	SI	S	C/NM	Y (3)	Y (5)
Demineralized Water Isolation Valve Train 1	30LAR10AA318	31UJH10026	M	H	ES	SI	S	C/NM	Y (3)	Y (5)
EFW Storage Pool Drain Manual Iso. Valve	30LAR10AA401	31UJH01024	M	H	ES	SI	S	C/NM	Y (3)	Y (5)
EFW Storage Pool Train 1	30LAR10BB001	31UJH05026	M	H	ES	SI	S			Y (5)
EFW Instrument Reference Leg Train 1	30LAR10BB301	31UJH10026	M	H	ES	SI	S			Y (5)
EFW Instrument Reference Leg Train 1	30LAR10BB302	31UJH10026	M	H	ES	SI	S			Y (5)
EFW Pool Level (Narrow Range) Train 1	30LAR10CL002	31UJH10026	M	H	ES	SI	S			Y (5)
EFW Pool Local Level Guage Train 1	30LAR10CL501	31UJH05026	M	H	ES	SI	S			Y (5)
EFW Storage Pool Temperature Train 1	30LAR10CT001	31UJH05026	M	H	ES	SI	S			Y (5)
EFW Pump Suction Manual Iso. Valve Train 1	30LAR11AA001	31UJH01024	M	H	ES	SI	S	C/NM	Y (3)	Y (5)
EFW Min Flow Check Valve Train 1	30LAR11AA002	31UJH01024	M	H	ES	SI	S	C/NM	Y (3)	Y (5)
EFW Pump Discharge Manual Iso. Valve Train 1	30LAR11AA004	31UJH01024	M	H	ES	SI	S	C/NM	Y (3)	Y (5)
EFW SG Isolation Valve Train 1	30LAR11AA006	31UJH10010	M	H	ES PAM	SI	S	C/NM	Y (3)	Y (5)
EFW CI Check Valve Train 1	30LAR11AA007	30UJA29003	H	H	ES	SI	S	C/NM	Y (4)	Y (5)
EFW Flow Control Valve Train 1	30LAR11AA103	31UJH01024	M	H	ES	SI	S	C/NM	Y (3)	Y (5)
EFW SG Level Control Valve Train 1	30LAR11AA105	31UJH01024	M	H	ES	SI	S	C/NM	Y (3)	Y (5)
EFW Instrument Valve Train 1	30LAR11AA301	31UJH01024	M	H	ES	SI	S	C/NM	Y (3)	Y (5)
EFW Instrument Valve Train 1	30LAR11AA302	31UJH01024	M	H	ES	SI	S	C/NM	Y (3)	Y (5)
EFW Instrument Valve Train 1	30LAR11AA303	31UJH01024	M	H	ES	SI	S	C/NM	Y (3)	Y (5)

Table 3.10-1—List of Seismically and Dynamically Qualified Mechanical and Electrical Equipment (Sheet 115 of 197)

Name Tag (Equipment Description)	Tag Number	Local Area KKS ID (Room Location)	EQ Environment (Note 1)	Radiation Environment Zone (Note 2)	EQ Designated Function (Note 3)		Safety Class (Note 4)		EQ Program Designation (Note 5)		
EFW Instrument Valve Train 1	30LAR11AA304	31UJH01024	M	H	ES	SI	S	C/NM	Y (3)		Y (5)
EFW Instrument Valve Train 1	30LAR11AA305	31UJH01024	M	H	ES	SI	S	C/NM	Y (3)		Y (5)
EFW Instrument Valve Train 1	30LAR11AA306	31UJH01024	M	H	ES	SI	S	C/NM	Y (3)		Y (5)
EFW Instrument Valve Train 1	30LAR11AA307	31UJH01024	M	H	ES	SI	S	C/NM	Y (3)		Y (5)
EFW Instrument Valve Train 1	30LAR11AA308	31UJH01024	M	H	ES	SI	S	C/NM	Y (3)		Y (5)
EFW Instrument Valve Train 1	30LAR11AA309	31UJH01024	M	H	ES	SI	S	C/NM	Y (3)		Y (5)
EFW Instrument Valve Train 1	30LAR11AA310	31UJH01024	M	H	ES	SI	S	C/NM	Y (3)		Y (5)
EFW Vent/Drain Valve Train 1	30LAR11AA401	31UJH01024	M	H	ES	SI	S	C/NM	Y (3)		Y (5)
EFW Hydrazine Injection Valve Train 1	30LAR11AA402	31UJH01024	M	H	ES	SI	S	C/NM	Y (3)		Y (5)
EFW Vent/Drain Valve Train 1	30LAR11AA403	30UJA29003	H	H	ES	SI	S	C/NM		Y (4)	Y (5)
EFW Vent/Drain Valve Train 1	30LAR11AA501	31UJH01024	M	H	ES	SI	S	C/NM	Y (3)		Y (5)
EFW Vent/Drain Valve Train 1	30LAR11AA502	31UJH01024	M	H	ES	SI	S	C/NM	Y (3)		Y (5)
EFW Vent/Drain Valve Train 1	30LAR11AA503	30UJA29003	H	H	ES	SI	S	C/NM		Y (4)	Y (5)
EFW Vent/Test Valve train 1	30LAR11AA504	31UJH10010	M	H	ES	SI	S	C/NM	Y(3)		Y(5)
EFW Pump Suction Pressure Train 1	30LAR11CP001	31UJH01024	M	H	ES	SI	S				Y (5)
EFW Pump Developed Head Train 1	30LAR11CP002	31UJH01024	M	H	ES	SI	S				Y (5)
EFW Pump Discharge Pressure Train 1	30LAR11CP003	31UJH01024	M	H	ES	SI	S				Y (5)
EFW SG Level Control Valve DP Train 1	30LAR11CP004	31UJH01024	M	H	ES	SI	S				Y (5)
EFW Pump Suction Temperature Train 1	30LAR11CT001	31UJH01024	M	H	ES	SI	S				Y (5)
EFW Pump Discharge Temperature Train 1	30LAR11CT004	31UJH10004	M	H	ES	SI	S				Y (5)
Full Flow Test Valve Train 1	30LAR12AA001	31UJH05026	M	H	ES	SI	S	C/NM	Y (3)		Y (5)
EFW Supply Header Isolation Valve Train 1	30LAR13AA001	31UJH01024	M	H	ES	SI	S	C/NM	Y (3)		Y (5)
EFW Discharge Header Isolation Valve Train 1	30LAR14AA001	31UJH01024	M	H	ES	SI	S	C/NM	Y (3)		Y (5)
EFW Storage Pool Offsite Filling Valve Train 2	30LAR20AA001	32UJH10020	M	H	ES	SI	S	C/NM	Y (3)		Y (5)
EFW Local Level Gauge Isolation Valve Train 2	30LAR20AA303	32UJH05020	M	H	ES	SI	S	C/NM	Y (3)		Y (5)
EFW Storage Pool Instrument Isolation Valve	30LAR20AA311	32UJH10020	M	H	ES	SI	S	C/NM	Y (3)		Y (5)
EFW Storage Pool Instrument Isolation Valve	30LAR20AA312	32UJH05020	M	H	ES	SI	S	C/NM	Y (3)		Y (5)
EFW Storage Pool Instrument Isolation Valve	30LAR20AA313	32UJH10020	M	H	ES	SI	S	C/NM	Y (3)		Y (5)
EFW Storage Pool Instrument Isolation Valve	30LAR20AA314	32UJH10020	M	H	ES	SI	S	C/NM	Y (3)		Y (5)
EFW Storage Pool Instrument Isolation Valve	30LAR20AA315	32UJH10020	M	H	ES	SI	S	C/NM	Y (3)		Y (5)
EFW Storage Pool Instrument Isolation Valve	30LAR20AA316	32UJH05020	M	H	ES	SI	S	C/NM	Y (3)		Y (5)
Demineralized Water Isolation Valve Train 2	30LAR20AA318	32UJH10020	M	H	ES	SI	S	C/NM	Y (3)		Y (5)
EFW Storage Pool Drain Manual Iso. Valve	30LAR20AA401	32UJH01024	M	H	ES	SI	S	C/NM	Y (3)		Y (5)

Table 3.10-1—List of Seismically and Dynamically Qualified Mechanical and Electrical Equipment (Sheet 116 of 197)

Name Tag (Equipment Description)	Tag Number	Local Area KKS ID (Room Location)	EQ Environment (Note 1)	Radiation Environment Zone (Note 2)	EQ Designated Function (Note 3)			Safety Class (Note 4)		EQ Program Designation (Note 5)		
EFW Storage Pool Train 2	30LAR20BB001	32UJH05020	M	H	ES		SI	S				Y (5)
EFW Instrument Reference Leg Train 2	30LAR20BB301	32UJH10020	M	H	ES		SI	S				Y (5)
EFW Instrument Reference Leg Train 2	30LAR20BB302	32UJH10020	M	H	ES		SI	S				Y (5)
EFW Pool Level (Narrow Range) Train 2	30LAR20CL002	32UJH10020	M	H	ES		SI	S				Y (5)
EFW Pool Local Level Guage Train 2	30LAR20CL501	32UJH05020	M	H	ES		SI	S				Y (5)
EFW Storage Pool Temperature Train 2	30LAR20CT001	32UJH05020	M	H	ES		SI	S				Y (5)
EFW Pump Suction Manual Iso. Valve Train 2	30LAR21AA001	32UJH01024	M	H	ES		SI	S	C/NM	Y (3)		Y (5)
EFW Min Flow Check Valve Train 2	30LAR21AA002	32UJH01024	M	H	ES		SI	S	C/NM	Y (3)		Y (5)
EFW Pump Discharge Manual Iso. Valve Train 2	30LAR21AA004	32UJH01024	M	H	ES		SI	S	C/NM	Y (3)		Y (5)
EFW SG Isolation Valve Train 2	30LAR21AA006	32UJH10002	M	H	ES	PAM	SI	S	C/NM	Y (3)		Y (5)
EFW CI Check Valve Train 2	30LAR21AA007	30UJA29004	H	H	ES		SI	S	C/NM		Y (4)	Y (5)
EFW Flow Control Valve Train 2	30LAR21AA103	32UJH01024	M	H	ES		SI	S	C/NM	Y (3)		Y (5)
EFW SG Level Control Valve Train 2	30LAR21AA105	32UJH01024	M	H	ES		SI	S	C/NM	Y (3)		Y (5)
EFW Instrument Valve Train 2	30LAR21AA301	32UJH01024	M	H	ES		SI	S	C/NM	Y (3)		Y (5)
EFW Instrument Valve Train 2	30LAR21AA302	32UJH01024	M	H	ES		SI	S	C/NM	Y (3)		Y (5)
EFW Instrument Valve Train 2	30LAR21AA303	32UJH01024	M	H	ES		SI	S	C/NM	Y (3)		Y (5)
EFW Instrument Valve Train 2	30LAR21AA304	32UJH01024	M	H	ES		SI	S	C/NM	Y (3)		Y (5)
EFW Instrument Valve Train 2	30LAR21AA305	32UJH01024	M	H	ES		SI	S	C/NM	Y (3)		Y (5)
EFW Instrument Valve Train 2	30LAR21AA306	32UJH01024	M	H	ES		SI	S	C/NM	Y (3)		Y (5)
EFW Instrument Valve Train 2	30LAR21AA307	32UJH01024	M	H	ES		SI	S	C/NM	Y (3)		Y (5)
EFW Instrument Valve Train 2	30LAR21AA308	32UJH01024	M	H	ES		SI	S	C/NM	Y (3)		Y (5)
EFW Instrument Valve Train 2	30LAR21AA309	32UJH01020	M	H	ES		SI	S	C/NM	Y (3)		Y (5)
EFW Instrument Valve Train 2	30LAR21AA310	32UJH01020	M	H	ES		SI	S	C/NM	Y (3)		Y (5)
EFW Vent/Drain Valve Train 2	30LAR21AA401	32UJH01024	M	H	ES		SI	S	C/NM	Y (3)		Y (5)
EFW Hydrazine Injection Valve Train 2	30LAR21AA402	32UJH01024	M	H	ES		SI	S	C/NM	Y (3)		Y (5)
EFW Vent/Drain Valve Train 2	30LAR21AA403	30UJA29004	H	H	ES		SI	S	C/NM		Y (4)	Y (5)
EFW Vent/Drain Valve Train 2	30LAR21AA501	32UJH01024	M	H	ES		SI	S	C/NM	Y (3)		Y (5)
EFW Vent/Drain Valve Train 2	30LAR21AA502	32UJH01024	M	H	ES		SI	S	C/NM	Y (3)		Y (5)
EFW Vent/Drain Valve Train 2	30LAR21AA503	30UJA29004	H	H	ES		SI	S	C/NM		Y (4)	Y (5)
EFW Vent/Test Valve train 1	30LAR21AA504	32UJH10010	M	H	ES		SI	S	C/NM	Y(3)		Y(5)
EFW Pump Suction Pressure Train 2	30LAR21CP001	32UJH01024	M	H	ES		SI	S				Y (5)
EFW Pump Developed Head Train 2	30LAR21CP002	32UJH01024	M	H	ES		SI	S				Y (5)

Table 3.10-1—List of Seismically and Dynamically Qualified Mechanical and Electrical Equipment (Sheet 117 of 197)

Name Tag (Equipment Description)	Tag Number	Local Area KKS ID (Room Location)	EQ Environment (Note 1)	Radiation Environment Zone (Note 2)	EQ Designated Function (Note 3)			Safety Class (Note 4)		EQ Program Designation (Note 5)		
EFW Pump Discharge Pressure Train 2	30LAR21CP003	32UJH01024	M	H	ES		SI	S				Y (5)
EFW SG Level Control Valve dP Train 2	30LAR21CP004	32UJH01024	M	H	ES		SI	S				Y (5)
EFW Pump Suction Temperature Train 2	30LAR21CT001	32UJH01024	M	H	ES		SI	S				Y (5)
EFW Pump Discharge Temperature Train 2	30LAR21CT004	32UJH10002	M	H	ES		SI	S				Y (5)
Full Flow Test Valve Train 2	30LAR22AA001	32UJH05020	M	H	ES		SI	S	C/NM	Y (3)		Y (5)
EFW Supply Header Isolation Valve Train 2	30LAR23AA001	32UJH01024	M	H	ES		SI	S	C/NM	Y (3)		Y (5)
EFW Discharge Header Isolation Valve Train 2	30LAR24AA001	32UJH01024	M	H	ES		SI	S	C/NM	Y (3)		Y (5)
EFW Storage Pool Offsite Filling Valve Train 3	30LAR30AA001	33UJH10020	M	H	ES		SI	S	C/NM	Y (3)		Y (5)
EFW Local Level Gauge Isolation Valve Train 3	30LAR30AA303	33UJH05020	M	H	ES		SI	S	C/NM	Y (3)		Y (5)
EFW Storage Pool Instrument Isolation Valve	30LAR30AA311	33UJH10020	M	H	ES		SI	S	C/NM	Y (3)		Y (5)
EFW Storage Pool Instrument Isolation Valve	30LAR30AA312	33UJH05020	M	H	ES		SI	S	C/NM	Y (3)		Y (5)
EFW Storage Pool Instrument Isolation Valve	30LAR30AA313	33UJH10020	M	H	ES		SI	S	C/NM	Y (3)		Y (5)
EFW Storage Pool Instrument Isolation Valve	30LAR30AA314	33UJH10020	M	H	ES		SI	S	C/NM	Y (3)		Y (5)
EFW Storage Pool Instrument Isolation Valve	30LAR30AA315	33UJH10020	M	H	ES		SI	S	C/NM	Y (3)		Y (5)
EFW Storage Pool Instrument Isolation Valve	30LAR30AA316	33UJH05020	M	H	ES		SI	S	C/NM	Y (3)		Y (5)
Demineralized Water Isolation Valve Train 3	30LAR30AA318	33UJH10020	M	H	ES		SI	S	C/NM	Y (3)		Y (5)
EFW Storage Pool Drain Manual Iso. Valve	30LAR30AA401	33UJH01038	M	H	ES		SI	S	C/NM	Y (3)		Y (5)
EFW Storage Pool Train 3	30LAR30BB001	33UJH05024	M	H	ES		SI	S				Y (5)
EFW Instrument Reference Leg Train 3	30LAR30BB301	33UJH10020	M	H	ES		SI	S				Y (5)
EFW Instrument Reference Leg Train 3	30LAR30BB302	33UJH10020	M	H	ES		SI	S				Y (5)
EFW Pool Level (Narrow Range) Train 3	30LAR30CL002	33UJH10020	M	H	ES		SI	S				Y (5)
EFW Pool Local Level Guage Train 3	30LAR30CL501	33UJH05020	M	H	ES		SI	S				Y (5)
EFW Storage Pool Temperature Train 3	30LAR30CT001	33UJH05026	M	H	ES		SI	S				Y (5)
EFW Pump Suction Manual Iso. Valve Train 3	30LAR31AA001	33UJH01038	M	H	ES		SI	S	C/NM	Y (3)		Y (5)
EFW Min Flow Check Valve Train 3	30LAR31AA002	33UJH01038	M	H	ES		SI	S	C/NM	Y (3)		Y (5)
EFW Pump Discharge Manual Iso. Valve Train 3	30LAR31AA004	33UJH01038	M	H	ES		SI	S	C/NM	Y (3)		Y (5)
EFW SG Isolation Valve Train 3	30LAR31AA006	33UJH10002	M	H	ES	PAM	SI	S	C/NM	Y (3)		Y (5)
EFW CI Check Valve Train 3	30LAR31AA007	30UJA29007	H	H	ES		SI	S	C/NM		Y (4)	Y (5)
EFW Flow Control Valve Train 3	30LAR31AA103	33UJH01038	M	H	ES		SI	S	C/NM	Y (3)		Y (5)
EFW SG Level Control Valve Train 3	30LAR31AA105	33UJH01038	M	H	ES		SI	S	C/NM	Y (3)		Y (5)
EFW Instrument Valve Train 3	30LAR31AA301	33UJH01038	M	H	ES		SI	S	C/NM	Y (3)		Y (5)
EFW Instrument Valve Train 3	30LAR31AA302	33UJH01038	M	H	ES		SI	S	C/NM	Y (3)		Y (5)

Table 3.10-1—List of Seismically and Dynamically Qualified Mechanical and Electrical Equipment (Sheet 118 of 197)

Name Tag (Equipment Description)	Tag Number	Local Area KKS ID (Room Location)	EQ Environment (Note 1)	Radiation Environment Zone (Note 2)	EQ Designated Function (Note 3)		Safety Class (Note 4)		EQ Program Designation (Note 5)		
EFW Instrument Valve Train 3	30LAR31AA303	33UJH01038	M	H	ES	SI	S	C/NM	Y (3)		Y (5)
EFW Instrument Valve Train 3	30LAR31AA304	33UJH01038	M	H	ES	SI	S	C/NM	Y (3)		Y (5)
EFW Instrument Valve Train 3	30LAR31AA305	33UJH01038	M	H	ES	SI	S	C/NM	Y (3)		Y (5)
EFW Instrument Valve Train 3	30LAR31AA306	33UJH01038	M	H	ES	SI	S	C/NM	Y (3)		Y (5)
EFW Instrument Valve Train 3	30LAR31AA307	33UJH01038	M	H	ES	SI	S	C/NM	Y (3)		Y (5)
EFW Instrument Valve Train 3	30LAR31AA308	33UJH01038	M	H	ES	SI	S	C/NM	Y (3)		Y (5)
EFW Instrument Valve Train 3	30LAR31AA309	33UJH01038	M	H	ES	SI	S	C/NM	Y (3)		Y (5)
EFW Instrument Valve Train 3	30LAR31AA310	33UJH01038	M	H	ES	SI	S	C/NM	Y (3)		Y (5)
EFW Vent/Drain Valve Train 3	30LAR31AA401	33UJH01038	M	H	ES	SI	S	C/NM	Y (3)		Y (5)
EFW Hydrazine Injection Valve Train 3	30LAR31AA402	33UJH01038	M	H	ES	SI	S	C/NM	Y (3)		Y (5)
EFW Vent/Drain Valve Train 3	30LAR31AA403	30UJA29007	H	H	ES	SI	S	C/NM		Y (4)	Y (5)
EFW Vent/Drain Valve Train 3	30LAR31AA501	33UJH01038	M	H	ES	SI	S	C/NM	Y (3)		Y (5)
EFW Vent/Drain Valve Train 3	30LAR31AA502	33UJH01038	M	H	ES	SI	S	C/NM	Y (3)		Y (5)
EFW Vent/Drain Valve Train 3	30LAR31AA503	30UJA29007	H	H	ES	SI	S	C/NM		Y (4)	Y (5)
EFW Vent/Test Valve train 1	30LAR31AA504	33UJH10010	M	H	ES	SI	S	C/NM	Y(3)		Y(5)
EFW Pump Suction Pressure Train 3	30LAR31CP001	33UJH01038	M	H	ES	SI	S				Y (5)
EFW Pump Developed Head Train 3	30LAR31CP002	33UJH01038	M	H	ES	SI	S				Y (5)
EFW Pump Discharge Pressure Train 3	30LAR31CP003	33UJH01038	M	H	ES	SI	S				Y (5)
EFW SG Level Control Valve dP Train 3	30LAR31CP004	33UJH01038	M	H	ES	SI	S				Y (5)
EFW Pump Suction Temperature Train 3	30LAR31CT001	33UJH01038	M	H	ES	SI	S				Y (5)
EFW Pump Discharge Temperature Train 3	30LAR31CT004	33UJH10002	M	H	ES	SI	S				Y (5)
Full Flow Test Valve Train 3	30LAR32AA001	33UJH05024	M	H	ES	SI	S	C/NM	Y (3)		Y (5)
EFW Supply Header Isolation Valve Train 3	30LAR33AA001	33UJH01038	M	H	ES	SI	S	C/NM	Y (3)		Y (5)
EFW Discharge Header Isolation Valve Tra	30LAR34AA001	33UJH01038	M	H	ES	SI	S	C/NM	Y (3)		Y (5)
EFW Storage Pool Offsite Filling Valve Train 4	30LAR40AA001	34UJH10026	M	H	ES	SI	S	C/NM	Y (3)		Y (5)
EFW Local Level Gauge Isolation Valve Train 4	30LAR40AA303	34UJH05026	M	H	ES	SI	S	C/NM	Y (3)		Y (5)
EFW Storage Pool Instrument Isolation Valve	30LAR40AA311	34UJH10026	M	H	ES	SI	S	C/NM	Y (3)		Y (5)
EFW Storage Pool Instrument Isolation Valve	30LAR40AA312	34UJH05026	M	H	ES	SI	S	C/NM	Y (3)		Y (5)
EFW Storage Pool Instrument Isolation Valve	30LAR40AA313	34UJH10026	M	H	ES	SI	S	C/NM	Y (3)		Y (5)
EFW Storage Pool Instrument Isolation Valve	30LAR40AA314	34UJH10026	M	H	ES	SI	S	C/NM	Y (3)		Y (5)
EFW Storage Pool Instrument Isolation Valve	30LAR40AA315	34UJH10026	M	H	ES	SI	S	C/NM	Y (3)		Y (5)
EFW Storage Pool Instrument Isolation Valve	30LAR40AA316	34UJH05026	M	H	ES	SI	S	C/NM	Y (3)		Y (5)
Demineralized Water Isolation Valve Train 4	30LAR40AA318	34UJH10026	M	H	ES	SI	S	C/NM	Y (3)		Y (5)

Table 3.10-1—List of Seismically and Dynamically Qualified Mechanical and Electrical Equipment (Sheet 119 of 197)

Name Tag (Equipment Description)	Tag Number	Local Area KKS ID (Room Location)	EQ Environment (Note 1)	Radiation Environment Zone (Note 2)	EQ Designated Function (Note 3)	Safety Class (Note 4)	EQ Program Designation (Note 5)
EFW Storage Pool Drain Manual Iso. Valve	30LAR40AA401	34UJH01024	M	H	ES SI	S C/NM	Y (3) Y (5)
EFW Storage Pool Train 4	30LAR40BB001	34UJH05026	M	H	ES SI	S	Y (5)
EFW Instrument Reference Leg Train 4	30LAR40BB301	34UJH10026	M	H	ES SI	S	Y (5)
EFW Instrument Reference Leg Train 4	30LAR40BB302	34UJH10026	M	H	ES SI	S	Y (5)
EFW Pool Level (Narrow Range) Train 4	30LAR40CL002	34UJH10026	M	H	ES SI	S	Y (5)
EFW Pool Local Level Guage Train 4	30LAR40CL501	34UJH05026	M	H	ES SI	S	Y (5)
EFW Storage Pool Temperature Train 4	30LAR40CT001	34UJH05026	M	H	ES SI	S	Y (5)
EFW Pump Suction Manual Iso. Valve Train 4	30LAR41AA001	34UJH01024	M	H	ES SI	S C/NM	Y (3) Y (5)
EFW Min Flow Check Valve Train 4	30LAR41AA002	34UJH01024	M	H	ES SI	S C/NM	Y (3) Y (5)
EFW Pump Discharge Manual Iso. Valve Train 4	30LAR41AA004	34UJH01024	M	H	ES SI	S C/NM	Y (3) Y (5)
EFW SG Isolation Valve Train 4	30LAR41AA006	34UJH10004	M	H	ES PAM SI	S C/NM	Y (3) Y (5)
EFW CI Check Valve Train 4	30LAR41AA007	30UJA29008	H	H	ES SI	S C/NM	Y (4) Y (5)
EFW Flow Control Valve Train 4	30LAR41AA103	34UJH01024	M	H	ES SI	S C/NM	Y (3) Y (5)
EFW SG Level Control Valve Train 4	30LAR41AA105	34UJH01024	M	H	ES SI	S C/NM	Y (3) Y (5)
EFW Instrument Valve Train 4	30LAR41AA301	34UJH01024	M	H	ES SI	S C/NM	Y (3) Y (5)
EFW Instrument Valve Train 4	30LAR41AA302	34UJH01024	M	H	ES SI	S C/NM	Y (3) Y (5)
EFW Instrument Valve Train 4	30LAR41AA303	34UJH01024	M	H	ES SI	S C/NM	Y (3) Y (5)
EFW Instrument Valve Train 4	30LAR41AA304	34UJH01024	M	H	ES SI	S C/NM	Y (3) Y (5)
EFW Instrument Valve Train 4	30LAR41AA305	34UJH01024	M	H	ES SI	S C/NM	Y (3) Y (5)
EFW Instrument Valve Train 4	30LAR41AA306	34UJH01024	M	H	ES SI	S C/NM	Y (3) Y (5)
EFW Instrument Valve Train 4	30LAR41AA307	34UJH01024	M	H	ES SI	S C/NM	Y (3) Y (5)
EFW Instrument Valve Train 4	30LAR41AA308	34UJH01024	M	H	ES SI	S C/NM	Y (3) Y (5)
EFW Instrument Valve Train 4	30LAR41AA309	34UJH01024	M	H	ES SI	S C/NM	Y (3) Y (5)
EFW Instrument Valve Train 4	30LAR41AA310	34UJH01024	M	H	ES SI	S C/NM	Y (3) Y (5)
EFW Vent/Drain Valve Train 4	30LAR41AA401	34UJH01024	M	H	ES SI	S C/NM	Y (3) Y (5)
EFW Hydrazine Injection Valve Train 4	30LAR41AA402	34UJH01024	M	H	ES SI	S C/NM	Y (3) Y (5)
EFW Vent/Drain Valve Train 4	30LAR41AA403	30UJA29008	H	H	ES SI	S C/NM	Y (4) Y (5)
EFW Vent/Drain Valve Train 4	30LAR41AA501	34UJH01024	M	H	ES SI	S C/NM	Y (3) Y (5)
EFW Vent/Drain Valve Train 4	30LAR41AA502	34UJH01024	M	H	ES SI	S C/NM	Y (3) Y (5)
EFW Vent/Drain Valve Train 4	30LAR41AA503	30UJA29008	H	H	ES SI	S C/NM	Y (4) Y (5)
EFW Vent/Test Valve train 1	30LAR41AA504	34UJH10010	M	H	ES SI	S C/NM	Y(3) Y(5)
EFW Pump Suction Pressure Train 4	30LAR41CP001	34UJH01024	M	H	ES SI	S	Y (5)

Table 3.10-1—List of Seismically and Dynamically Qualified Mechanical and Electrical Equipment (Sheet 120 of 197)

Name Tag (Equipment Description)	Tag Number	Local Area KKS ID (Room Location)	EQ Environment (Note 1)	Radiation Environment Zone (Note 2)	EQ Designated Function (Note 3)		Safety Class (Note 4)		EQ Program Designation (Note 5)	
EFW Pump Developed Head Train 4	30LAR41CP002	34UJH01024	M	H	ES	SI	S			Y (5)
EFW Pump Discharge Pressure Train 4	30LAR41CP003	34UJH01024	M	H	ES	SI	S			Y (5)
EFW SG Level Control Valve dP Train 4	30LAR41CP004	34UJH01024	M	H	ES	SI	S			Y (5)
EFW Pump Suction Temperature Train 4	30LAR41CT001	34UJH01024	M	H	ES	SI	S			Y (5)
EFW Pump Discharge Temperature Train 4	30LAR41CT004	34UJH10004	M	H	ES	SI	S			Y (5)
Full Flow Test Valve Train 4	30LAR42AA001	34UJH05026	M	H	ES	SI	S	C/NM	Y (3)	Y (5)
EFW Supply Header Isolation Valve Train 4	30LAR43AA001	34UJH01024	M	H	ES	SI	S	C/NM	Y (3)	Y (5)
EFW Discharge Header Isolation Valve Train 4	30LAR44AA001	34UJH01024	M	H	ES	SI	S	C/NM	Y (3)	Y (5)
EFW Discharge Header Vent/Drain Valve	30LAR51AA501	31UJH01002	M	H	ES	SI	S	C/NM	Y (3)	Y (5)
EFW Discharge Header Vent/Drain Valve	30LAR52AA401	32UJH01011	M	H	ES	SI	S	C/NM	Y (3)	Y (5)
EFW Discharge Header Vent/Drain Valve	30LAR54AA501	34UJH01002	M	H	ES	SI	S	C/NM	Y (3)	Y (5)
EFW Pump Train 1 Drain	30LAS11AA401	31UJH01024	M	H	ES	SI	S	C/NM	Y (3)	Y (5)
EFW Pump Train 1 Drain	30LAS11AA402	31UJH01025	M	H	ES	SI	S	C/NM	Y (3)	Y (5)
EFW Pump Train 1 Drain	30LAS11AA403	31UJH01026	M	H	ES	SI	S	C/NM	Y (3)	Y (5)
EFW Pump Train 1 Drain	30LAS11AA404	31UJH01027	M	H	ES	SI	S	C/NM	Y (3)	Y (5)
EFW Pump Train 1 Vent	30LAS11AA501	31UJH01028	M	H	ES	SI	S	C/NM	Y (3)	Y (5)
EFW Pump Train 1	30LAS11AP001	31UJH01029	M	H	ES	SI	S	C/NM	Y (3)	Y (5)
EFW Pump Train 2 Drain	30LAS21AA401	32UJH01024	M	H	ES	SI	S	C/NM	Y (3)	Y (5)
EFW Pump Train 2 Drain	30LAS21AA402	32UJH01024	M	H	ES	SI	S	C/NM	Y (3)	Y (5)
EFW Pump Train 2 Drain	30LAS21AA403	32UJH01024	M	H	ES	SI	S	C/NM	Y (3)	Y (5)
EFW Pump Train 2 Drain	30LAS21AA404	32UJH01024	M	H	ES	SI	S	C/NM	Y (3)	Y (5)
EFW Pump Train 2 Vent	30LAS21AA501	32UJH01024	M	H	ES	SI	S	C/NM	Y (3)	Y (5)
EFW Pump Train 2	30LAS21AP001	32UJH01024	M	H	ES	SI	S	C/NM	Y (3)	Y (5)
EFW Pump Train 2 Drain	30LAS31AA401	33UJH01024	M	H	ES	SI	S	C/NM	Y (3)	Y (5)
EFW Pump Train 2 Drain	30LAS31AA402	33UJH01024	M	H	ES	SI	S	C/NM	Y (3)	Y (5)
EFW Pump Train 2 Drain	30LAS31AA403	33UJH01024	M	H	ES	SI	S	C/NM	Y (3)	Y (5)
EFW Pump Train 2 Drain	30LAS31AA404	33UJH01024	M	H	ES	SI	S	C/NM	Y (3)	Y (5)
EFW Pump Train 2 Vent	30LAS31AA501	33UJH01024	M	H	ES	SI	S	C/NM	Y (3)	Y (5)
EFW Pump Train 3	30LAS31AP001	33UJH01024	M	H	ES	SI	S	C/NM	Y (3)	Y (5)
EFW Pump Train 4 Drain	30LAS41AA401	34UJH01024	M	H	ES	SI	S	C/NM	Y (3)	Y (5)
EFW Pump Train 4 Drain	30LAS41AA402	34UJH01024	M	H	ES	SI	S	C/NM	Y (3)	Y (5)
EFW Pump Train 4 Drain	30LAS41AA403	34UJH01024	M	H	ES	SI	S	C/NM	Y (3)	Y (5)
EFW Pump Train 4 Drain	30LAS41AA404	34UJH01024	M	H	ES	SI	S	C/NM	Y (3)	Y (5)

Table 3.10-1—List of Seismically and Dynamically Qualified Mechanical and Electrical Equipment (Sheet 121 of 197)

Name Tag (Equipment Description)	Tag Number	Local Area KKS ID (Room Location)	EQ Environment (Note 1)	Radiation Environment Zone (Note 2)	EQ Designated Function (Note 3)			Safety Class (Note 4)		EQ Program Designation (Note 5)		
EFW Pump Train 4 Vent	30LAS41AA501	34UJH01024	M	H	ES		SI	S	C/NM	Y (3)		Y (5)
EFW Pump Train 4	30LAS41AP001	34UJH01024	M	H	ES		SI	S	C/NM	Y (3)		Y (5)
EFW Pump Train 1 Oil Level (Local)	30LAS11CL501	31UJH01031	M	H	ES		SI	S				Y (5)
EFW Pump Train 1 Oil Level (Local)	30LAS11CL502	31UJH01032	M	H	ES		SI	S				Y (5)
EFW Pump Train 2 Oil Level (Local)	30LAS21CL501	32UJH01024	M	H	ES		SI	S				Y (5)
EFW Pump Train 2 Oil Level (Local)	30LAS21CL502	32UJH01024	M	H	ES		SI	S				Y (5)
EFW Pump Train 3 Oil Level (Local)	30LAS31CL501	33UJH01024	M	H	ES		SI	S				Y (5)
EFW Pump Train 3 Oil Level (Local)	30LAS31CL502	33UJH01024	M	H	ES		SI	S				Y (5)
EFW Pump Train 4 Oil Level (Local)	30LAS41CL501	34UJH01024	M	H	ES		SI	S				Y (5)
EFW Pump Train 4 Oil Level (Local)	30LAS41CL502	34UJH01024	M	H	ES		SI	S				Y (5)
In-Containment Refueling Water Storage Tank (IRWST)												
IRWST	30JNK00BB001	30UJA04003	H	H	ES		SI	S				Y (5)
IRWST 3-Way Isolation Valve	30JNK10AA001	31UJH01005	M	H	ES	PAM	SI	S	C/NM	Y (3)		Y (5)
SIS Train 2 Strainer Backflush Isol. Valve	30JNK10AA004	30UJA11013	H	H			SII	NS-AQ	C/NM		Y (4)	Y (5)
SIS Train 2 Strainer Backflush Isol. Valve	30JNK10AA005	30UJA11013	H	H			SII	NS-AQ	C/NM		Y (4)	Y (5)
SIS Train 1 Strainer Backflush Isol. Valve	30JNK10AA006	30UJA11013	H	H			SII	NS-AQ	C/NM		Y (4)	Y (5)
SIS Train 1 Strainer Backflush Isol. Valve	30JNK10AA007	30UJA11013	H	H			SII	NS-AQ	C/NM		Y (4)	Y (5)
1st CVCS Suct. Iso. Valve From IRWST	30JNK10AA009	31UJH01010	M	H	ES	PAM	SI	S	C/NM	Y (3)		Y (5)
SIS-IRWST Miniflow Line Check Valve	30JNK10AA010	30UJA07014	H	H	ES		SI	S	C/NM		Y (4)	Y (5)
SIS-IRWST Miniflow Line Check Valve	30JNK10AA011	30UJA07014	H	H	ES		SI	S	C/NM		Y (4)	Y (5)
2nd CVCS Suct. Isol. Valve From IRWST	30JNK10AA013	31UJH01010	M	H	ES	PAM	SI	S	C/NM	Y (3)		Y (5)
SIS Sump Str. TRN 1	30JNK10AT001	30UJA04003	H	H	ES		SI	S				Y (5)
SIS Sump Str. TRN 2	30JNK10AT002	30UJA04003	H	H	ES		SI	S				Y (5)
CVCS Sump Str.	30JNK10AT003	30UJA04003	H	H			SII	NS-AQ				Y (5)
Retaing Basket	30JNK10AT004	30UJA11002	H	H	ES		SI	S				Y (5)
Retaing Basket	30JNK10AT005	30UJA11005	H	H	ES		SI	S				Y (5)
Trash Rack	30JNK10AT014	30UJA04003	H	H	ES		SI	S				Y (5)
Trash Rack	30JNK10AT015	30UJA04003	H	H	ES		SI	S				Y (5)
TSP Basket	30JNK10AT024	30UJA11003	H	H	ES		SI	S				Y (5)
TSP Basket	30JNK10AT025	30UJA11004	H	H	ES		SI	S				Y (5)
SIS Train 3 Strainer Backflush Isol. Valve	30JNK11AA004	30UJA11015	H	H			SII	NS-AQ	C/NM		Y (4)	Y (5)
SIS Train 3 Strainer Backflush Isol. Valve	30JNK11AA005	30UJA11015	H	H			SII	NS-AQ	C/NM		Y (4)	Y (5)
SIS Train 4 Strainer Backflush Isol. Valve	30JNK11AA006	30UJA11016	H	H			SII	NS-AQ	C/NM		Y (4)	Y (5)

Table 3.10-1—List of Seismically and Dynamically Qualified Mechanical and Electrical Equipment (Sheet 122 of 197)

Name Tag (Equipment Description)	Tag Number	Local Area KKS ID (Room Location)	EQ Environment (Note 1)	Radiation Environment Zone (Note 2)	EQ Designated Function (Note 3)			Safety Class (Note 4)		EQ Program Designation (Note 5)		
SIS Train 4 Strainer Backflush Isol. Valve	30JNK11AA007	30UJA11016	H	H			SII	NS-AQ	C/NM		Y (4)	Y (5)
1st SAHRS Suct. Iso. Valve From IRWST	30JNK11AA009	34UJH01010	M	H	ES	PAM	SI	S	C/NM	Y (3)		Y (5)
SIS-IRWST Miniflow Line Check Valve	30JNK11AA010	30UJA07015	H	H	ES		SI	S	C/NM		Y (4)	Y (5)
SIS-IRWST Miniflow Line Check Valve	30JNK11AA011	30UJA07015	H	H	ES		SI	S	C/NM		Y (4)	Y (5)
SIS Sump Str. Trn 4	30JNK11AT001	30UJA04003	H	H	ES		SI	S				Y (5)
SIS Sump Str. Trn 3	30JNK11AT002	30UJA04003	H	H	ES		SI	S				Y (5)
SAHRS Sump Str.	30JNK11AT003	30UJA04003	H	H			SII	NS-AQ				Y (5)
Retaing Basket	30JNK11AT004	30UJA11006	H	H	ES		SI	S				Y (5)
Retaing Basket	30JNK11AT005	30UJA11009	H	H	ES		SI	S				Y (5)
Trash Rack	30JNK11AT014	30UJA04003	H	H	ES		SI	S				Y (5)
Trash Rack	30JNK11AT015	30UJA04003	H	H	ES		SI	S				Y (5)
TSP Basket	30JNK11AT024	30UJA11008	H	H	ES		SI	S				Y (5)
TSP Basket	30JNK11AT025	30UJA11007	H	H	ES		SI	S				Y (5)
IRWST 3-Way Isolation Valve	30JNK20AA001	32UJH01008	M	H	ES	PAM	SI	S	C/NM	Y (3)		Y (5)
IRWST 3-Way Isolation Valve	30JNK30AA001	33UJH01008	M	H	ES	PAM	SI	S	C/NM	Y (3)		Y (5)
IRWST 3-Way Isolation Valve	30JNK40AA001	34UJH01005	M	H	ES	PAM	SI	S	C/NM	Y (3)		Y (5)
SIS Str. 1&2 Backflush Flow	30JNK10CF501	30UJA11016	H	H			SII	NS-AQ	C/NM		Y (4)	Y (5)
IRWST Level Sensor - Train 1 & 2	30JNK10CL050	30UJA11013	H	H	ES	PAM	SI	S	C/NM		Y (4)	Y (5)
IRWST Level Sensor - Train 1 & 2	30JNK10CL052	30UJA11014	H	H	ES	PAM	SI	S	C/NM		Y (4)	Y (5)
SIS Suction Strainer dP Sensor	30JNK10CP001	30UJA07014	H	H	ES	PAM	SI	S	C/NM		Y (4)	Y (5)
SIS Suction Strainer dP Sensor	30JNK10CP002	30UJA07014	H	H	ES	PAM	SI	S	C/NM		Y (4)	Y (5)
CVCS Suction Strainer dp Sensor	30JNK10CP003	30UJA07014	H	H			SII	NS-AQ	C/NM		Y (4)	Y (5)
SIS TRN 1 Dbl. Gd. Pipe Press. Sensor	30JNK10CP004	31UJH01004	M	H	ES		SI	S	C/NM	Y (3)		Y (5)
SIS TRN 2 Dbl. Gd. Pipe Press. Sensor	30JNK10CP005	32UJH05010	M	H	ES		SI	S	C/NM	Y (3)		Y (5)
CVCS Suct. Ln. Dbl. Gd. Pipe Press. Ssr	30JNK10CP006	31UJH10001	M	H	ES		SI	S	C/NM	Y (3)		Y (5)
SIS TRN 1 Dbl. Gd. Pipe Press. Sensor, loc.	30JNK10CP504	31UJH05006	M	H	ES		SI	S	C/NM	Y (3)		Y (5)
SIS TRN 2 Dbl. Gd. Pipe Press. Sensor, loc.	30JNK10CP505	32UJH01008	M	H	ES		SI	S	C/NM	Y (3)		Y (5)
CVCS Suct. Ln. Dbl. Gd. Pipe Press. Ssr, loc.	30JNK10CP506	31UJH01010	M	H	ES		SI	S	C/NM	Y (3)		Y (5)
IRWST Temperature Sensor	30JNK10CT054	30UJA04003	H	H	ES		SI	S	C/NM		Y (4)	Y (5)
IRWST Temperature Sensor	30JNK10CT056	30UJA04003	H	H	ES		SI	S	C/NM		Y (4)	Y (5)
SIS Str. 3&4 Backflush Flow	30JNK11CF501	30UJA11016	H	H			SII	NS-AQ	C/NM		Y (4)	Y (5)
IRWST Level Sensor - Train 3 & 4	30JNK11CL050	30UJA11015	H	H	ES	PAM	SI	S	C/NM		Y (4)	Y (5)
IRWST Level Sensor - Train 3 & 4	30JNK11CL052	30UJA11016	H	H	ES	PAM	SI	S	C/NM		Y (4)	Y (5)

Table 3.10-1—List of Seismically and Dynamically Qualified Mechanical and Electrical Equipment (Sheet 123 of 197)

Name Tag (Equipment Description)	Tag Number	Local Area KKS ID (Room Location)	EQ Environment (Note 1)	Radiation Environment Zone (Note 2)	EQ Designated Function (Note 3)			Safety Class (Note 4)		EQ Program Designation (Note 5)	
SIS Suction Strainer dP Sensor	30JNK11CP001	30UJA07015	H	H	ES	PAM	SI	S	C/NM	Y (4)	Y (5)
SIS Suction Strainer dP Sensor	30JNK11CP002	30UJA07015	H	H	ES	PAM	SI	S	C/NM	Y (4)	Y (5)
SAHRS Suction Strainer dp Sensor	30JNK11CP003	30UJA07015	H	H			SII	NS-AQ	C/NM	Y (4)	Y (5)
SIS TRN 3 Dbl. Gd. Pipe Press. Sensor	30JNK11CP004	33UJH05006	M	H	ES		SI	S	C/NM	Y (3)	Y (5)
SIS TRN 4 Dbl. Gd. Pipe Press. Sensor	30JNK11CP005	34UJH05006	M	H	ES		SI	S	C/NM	Y (3)	Y (5)
SAHRS Suct. Ln. Dbl. Gd. Pipe Press. Ssr	30JNK11CP006	34UJH10001	M	H	ES		SI	S	C/NM	Y (3)	Y (5)
SIS TRN 3 Dbl. Gd. Pipe Press. Sensor, loc.	30JNK11CP504	33UJH01008	M	H	ES		SI	S	C/NM	Y (3)	Y (5)
SIS TRN 4 Dbl. Gd. Pipe Press. Sensor, loc.	30JNK11CP505	34UJH05006	M	H	ES		SI	S	C/NM	Y (3)	Y (5)
SAHRS Suct. Ln. Dbl. Gd. Pipe Pres. Ssr, loc.	30JNK11CP506	34UJH01010	M	H	ES		SI	S	C/NM	Y (3)	Y (5)
IRWST Temperature Sensor	30JNK11CT054	30UJA04003	H	H	ES		SI	S	C/NM	Y (4)	Y (5)
IRWST Temperature Sensor	30JNK11CT056	30UJA04003	H	H	ES		SI	S	C/NM	Y (4)	Y (5)
Main Steam System (MSS)											
MSIV Trn1	30LBA10AA002	31UJE34002	H	H	ES	PAM	SI	S	C/NM	Y (4)	Y (5)
LBA10CP811 I-V	30LBA10AA311	31UJE29002	H	M			SI	S			Y (5)
LBA10CP821 I-V	30LBA10AA321	31UJE29002	H	M			SI	S			Y (5)
LBA10CP831 I-V	30LBA10AA331	31UJE29002	H	M			SI	S			Y (5)
LBA10CP841 I-V	30LBA10AA341	31UJE29002	H	M			SI	S			Y (5)
MS Trn1 F-Meas I-V 1	30LBA10AA342	30UJA34003	H	H			SI	S			Y (5)
MS Trn1 F-Meas I-V 2	30LBA10AA343	30UJA34003	H	H			SI	S			Y (5)
MS Trn1 F-Meas I-V 3	30LBA10AA344	30UJA34003	H	H			SI	S			Y (5)
MSIV Trn1 Upstr D-V	30LBA10AA441	31UJE29002	H	M		PAM	SI	S	C/NM	Y (4)	Y (5)
MSIV Trn1 Dnstr D-V	30LBA10AA442	31UJE29002	H	M			SI	S	C/NM	Y (4)	Y (5)
MSIV Trn1 2nd D-V	30LBA10AA444	31UJE29002	H	M			SI	S	C/NM	Y (4)	Y (5)
MS Trn1 V-LN 1st I-V	30LBA10AA501	30UJA34003	H	H			SI	S			Y (5)
MS Trn1 V-LN 2nd I-V	30LBA10AA502	30UJA34003	H	H			SI	S			Y (5)
1st MSSV Trn1	30LBA11AA191	31UJE29002	H	M	ES		SI	S			Y (5)
2nd MSSV TRN1	30LBA12AA191	31UJE29002	H	M	ES		SI	S			Y (5)
MSRIV Trn 1	30LBA13AA001	31UJE29002	H	H	ES	PAM	SI	S	C/NM	Y (4)	Y (5)
MSRCV Trn 1	30LBA13AA101	31UJE29002	H	M	ES	PAM	SI	S	C/NM	Y (4)	Y (5)
LBA13CP401 I-V	30LBA13AA301	31UJE29002	H	M			SII	NS-AQ			Y (5)
MSRT1 Drn Flowrest	30LBA13BP701	31UJE29002	H	M			SII	NS-AQ			Y (5)
Silencer	30LBA13BS001	31UJE39001	M	M			SI	S			Y (5)
MSIV Byp Ln I-V Trn1	30LBA14AA001	31UJE29002	H	M		PAM	SI	S	C/NM	Y (4)	Y (5)

Table 3.10-1—List of Seismically and Dynamically Qualified Mechanical and Electrical Equipment (Sheet 124 of 197)

Name Tag (Equipment Description)	Tag Number	Local Area KKS ID (Room Location)	EQ Environment (Note 1)	Radiation Environment Zone (Note 2)	EQ Designated Function (Note 3)			Safety Class (Note 4)		EQ Program Designation (Note 5)	
MSIV Byp Ln C-V Trn1	30LBA14AA101	31UJE29002	H	M			SI	S	C/NM	Y (4)	Y (5)
MSIV Trn2	30LBA20AA002	32UJE34002	H	H	ES	PAM	SI	S	C/NM	Y (4)	Y (5)
LBA20CP811 I-V	30LBA20AA311	32UJE29002	H	M			SI	S			Y (5)
LBA20CP821 I-V	30LBA20AA321	32UJE29002	H	M			SI	S			Y (5)
LBA20CP831 I-V	30LBA20AA331	32UJE29002	H	M			SI	S			Y (5)
LBA20CP841 I-V	30LBA20AA341	32UJE29002	H	M			SI	S			Y (5)
MS Trn2 F-Meas I-V 1	30LBA20AA342	30UJA34004	H	H			SI	S			Y (5)
MS Trn2 F-Meas I-V 2	30LBA20AA343	30UJA34004	H	H			SI	S			Y (5)
MS Trn2 F-Meas I-V 3	30LBA20AA344	30UJA34004	H	H			SI	S			Y (5)
MSIV Trn2 Upstr D-V	30LBA20AA441	32UJE29002	H	M		PAM	SI	S	C/NM	Y (4)	Y (5)
MSIV Trn2 Dnstr D-V	30LBA20AA442	32UJE29002	H	M			SI	S	C/NM	Y (4)	Y (5)
MSIV Trn2 2nd D-V	30LBA20AA444	32UJE29002	H	M			SI	S	C/NM	Y (4)	Y (5)
MS Trn2 V-Ln 1st I-V	30LBA20AA501	30UJA34004	H	H			SI	S			Y (5)
MS Trn2 V-Ln 2nd I-V	30LBA20AA502	30UJA34004	H	H			SI	S			Y (5)
1st MSSV Trn2	30LBA21AA191	32UJE29002	H	M	ES		SI	S			Y (5)
2nd MSSV Trn2	30LBA22AA191	32UJE29002	H	M	ES		SI	S			Y (5)
MSRIV Trn 2	30LBA23AA001	32UJE29002	H	H	ES	PAM	SI	S	C/NM	Y (4)	Y (5)
MSRV Trn 2	30LBA23AA101	32UJE29002	H	M	ES	PAM	SI	S	C/NM	Y (4)	Y (5)
LBA23CP401 I-V	30LBA23AA301	32UJE29002	H	M			SII	NS-AQ			Y (5)
MSRT2 Drn Flowrest	30LBA23BP701	32UJE29002	H	M			SII	NS-AQ			Y (5)
Silencer	30LBA23BS001	30UJE39001	M	M			SI	S			Y (5)
MSIV Byp Ln I-V Trn2	30LBA24AA001	32UJE29002	H	M		PAM	SI	S	C/NM	Y (4)	Y (5)
MSIV Byp Ln C-V Trn2	30LBA24AA101	32UJE29002	H	M			SI	S	C/NM	Y (4)	Y (5)
MSIV Trn3	30LBA30AA002	33UJE33002	H	H	ES	PAM	SI	S	C/NM	Y (4)	Y (5)
LBA30CP811 I-V	30LBA30AA311	33UJE29002	H	M			SI	S			Y (5)
LBA30CP821 I-V	30LBA30AA321	33UJE29002	H	M			SI	S			Y (5)
LBA30CP831 I-V	30LBA30AA331	33UJE29002	H	M			SI	S			Y (5)
LBA30CP841 I-V	30LBA30AA341	33UJE29002	H	M			SI	S			Y (5)
MS Trn3 F-Meas I-V 1	30LBA30AA342	30UJA34007	H	H			SI	S			Y (5)
MS Trn3 F-Meas I-V 2	30LBA30AA343	30UJA34007	H	H			SI	S			Y (5)
MS Trn3 F-Meas I-V 3	30LBA30AA344	30UJA34007	H	H			SI	S			Y (5)
MSIV Trn3 Upstr D-V	30LBA30AA441	33UJE29002	H	M		PAM	SI	S	C/NM	Y (4)	Y (5)
MSIV Trn3 Dnstr D-V	30LBA30AA442	33UJE29002	H	M			SI	S	C/NM	Y (4)	Y (5)

Table 3.10-1—List of Seismically and Dynamically Qualified Mechanical and Electrical Equipment (Sheet 125 of 197)

Name Tag (Equipment Description)	Tag Number	Local Area KKS ID (Room Location)	EQ Environment (Note 1)	Radiation Environment Zone (Note 2)	EQ Designated Function (Note 3)			Safety Class (Note 4)		EQ Program Designation (Note 5)	
MSIV Trn3 2nd D-V	30LBA30AA444	33UJE29002	H	M			SI	S	C/NM	Y (4)	Y (5)
MS Trn3 V-Ln 1st I-V	30LBA30AA501	30UJA34007	H	H			SI	S			Y (5)
MS Trn3 V-Ln 2nd I-V	30LBA30AA502	30UJA34007	H	H			SI	S			Y (5)
1st MSSV Trn3	30LBA31AA191	33UJE29002	H	M	ES		SI	S			Y (5)
2nd MSSV Trn3	30LBA32AA191	33UJE29002	H	M	ES		SI	S			Y (5)
MSRIV Trn 3	30LBA33AA001	33UJE29002	H	H	ES	PAM	SI	S	C/NM	Y (4)	Y (5)
MSRV Trn 3	30LBA33AA101	33UJE29002	H	M	ES	PAM	SI	S	C/NM	Y (4)	Y (5)
LBA33CP401 I-V	30LBA33AA301	33UJE29002	H	M			SII	NS-AQ			Y (5)
MSRT3 Drn Flowrest	30LBA33BP701	33UJE29002	H	M			SII	NS-AQ			Y (5)
Silencer	30LBA33BS001	34UJE39001	M	M			SI	S			Y (5)
MSIV Byp LN I-V Trn3	30LBA34AA001	33UJE29002	H	M		PAM	SI	S	C/NM	Y (4)	Y (5)
MSIV Byp LN C-V Trn3	30LBA34AA101	33UJE29002	H	M			SI	S	C/NM	Y (4)	Y (5)
MSIV Trn4	30LBA40AA002	34UJE33002	H	H	ES	PAM	SI	S	C/NM	Y (4)	Y (5)
LBA40CP811 I-V	30LBA40AA311	34UJE29002	H	M			SI	S			Y (5)
LBA40CP821 I-V	30LBA40AA321	34UJE29002	H	M			SI	S			Y (5)
LBA40CP831 I-V	30LBA40AA331	34UJE29002	H	M			SI	S			Y (5)
LBA40CP841 I-V	30LBA40AA341	34UJE29002	H	M			SI	S			Y (5)
MS Tr43 F-Meas I-V 1	30LBA40AA342	30UJA34008	H	H			SI	S			Y (5)
MS Tr43 F-Meas I-V 2	30LBA40AA343	30UJA34008	H	H			SI	S			Y (5)
MS Tr43 F-Meas I-V 3	30LBA40AA344	30UJA34008	H	H			SI	S			Y (5)
MSIV Trn4 Upstr D-V	30LBA40AA441	34UJE29002	H	M		PAM	SI	S	C/NM	Y (4)	Y (5)
MSIV Trn4 Dnstr D-V	30LBA40AA442	34UJE29002	H	M			SI	S	C/NM	Y (4)	Y (5)
MSIV Trn4 2nd D-V	30LBA40AA444	34UJE29002	H	M			SI	S	C/NM	Y (4)	Y (5)
MS Trn4 V-Ln 1st I-V	30LBA40AA501	30UJA34008	H	H			SI	S			Y (5)
MS Trn4 V-Ln 2nd I-V	30LBA40AA502	30UJA34008	H	H			SI	S			Y (5)
1st MSSV Trn4	30LBA41AA191	34UJE29002	H	M	ES		SI	S			Y (5)
2nd MSSV Trn4	30LBA42AA191	34UJE29002	H	M	ES		SI	S			Y (5)
MSRIV Trn 4	30LBA43AA001	34UJE29002	H	H	ES	PAM	SI	S	C/NM	Y (4)	Y (5)
MSRV Trn 4	30LBA43AA101	34UJE29002	H	M	ES	PAM	SI	S	C/NM	Y (4)	Y (5)
LBA43CP401 I-V	30LBA43AA301	34UJE29002	H	M			SII	NS-AQ			Y (5)
MSRT4 Drn Flowrest	30LBA43BP701	34UJE29002	H	M			SII	NS-AQ			Y (5)
Silencer	30LBA43BS001	34UJE39001	M	M			SI	S			Y (5)
MSIV Byp Ln I-V Trn4	30LBA44AA001	34UJE29002	H	M		PAM	SI	S	C/NM	Y (4)	Y (5)

Table 3.10-1—List of Seismically and Dynamically Qualified Mechanical and Electrical Equipment (Sheet 126 of 197)

Name Tag (Equipment Description)	Tag Number	Local Area KKS ID (Room Location)	EQ Environment (Note 1)	Radiation Environment Zone (Note 2)	EQ Designated Function (Note 3)	Safety Class (Note 4)	EQ Program Designation (Note 5)
MSIV Byp Ln C-V Trn4	30LBA44AA101	34UJE29002	H	M	SI	S C/NM	Y (4) Y (5)
Steam Generator Blowdown System (SGBS)							
SG1 Hot Leg BD Isolation Gate Valve	30LCQ10AA001	30UJA15003	H	H	ES SI	S C/NM	Y (4) Y (5)
SG1 Cold Leg BD Isolation Gate Valve	30LCQ10AA002	30UJA15003	H	H	ES SI	S C/NM	Y (4) Y (5)
SG1 Common BD Isolation Gate Valve	30LCQ10AA003	30UJA11018	H	H	ES SI	S C/NM	Y (4) Y (5)
SG1 N2 Bubbling Globe Valve Isolation	30LCQ10AA010	30UJA15018	H	H	SI	S C/NM	Y (4) Y (5)
N2 Bubbling Lift Check for SG1	30LCQ10AA011	30UJA15018	H	H	SI	S C/NM	Y (4) Y (5)
SG Transfer Globe Valve b/t SGs 1 & 2	30LCQ10AA012	30UJA23004	H	H	ES SI	S C/NM	Y (4) Y (5)
SG1 BD Flowrate Control Valve	30LCQ10AA104	30UJA11018	H	H	SI	S C/NM	Y (4) Y (5)
SG1 BD Flowrate Instr. Globe Valve #1	30LCQ10AA301	30UJA11013	H	H	SI	S C/NM	Y (4) Y (5)
SG1 BD fLowrate Instr. Globe Valve #2	30LCQ10AA302	30UJA11013	H	H	SI	S C/NM	Y (4) Y (5)
SG 1 Manual Drain Globe Valve	30LCQ10AA401	30UJA15003	H	H	SI	S C/NM	Y (4) Y (5)
Manual Vent Globe valve for Filling	30LCQ10AA501	30UJA23004	H	H	SI	S C/NM	Y (4) Y (5)
Manual Isolation Valve for Venting	30LCQ10AA502	30UJA23004	H	H	SI	S C/NM	Y (4) Y (5)
SG1 Hot Leg Sampling Globe Valve	30LCQ10AA601	30UJA15013	H	H	SI	S C/NM	Y (4) Y (5)
SG 1 cold leg sampling globe valve	30LCQ10AA602	30UJA15013	H	H	SI	S C/NM	Y (4) Y (5)
SG1 BD Flow Rate Sensor	30LCQ10CF001	30UJA11013	H	H	SI	S	Y (5)
Position of SG1 BD Flowrate Ctrl Valve	30LCQ10CG104	30UJA11018	H	H	SI	S	Y (5)
SG1 BD tEmperature Sensor	30LCQ10CT001	30UJA11003	H	H	SI	S	Y (5)
SG2 Hot Leg BD Gate Isolation Valve	30LCQ20AA001	30UJA15004	H	H	ES SI	S C/NM	Y (4) Y (5)
SG2 Cold Leg BD Gate Isolation Valve	30LCQ20AA002	30UJA15004	H	H	ES SI	S C/NM	Y (4) Y (5)
SG2 Common BD Gate Isolation Valve	30LCQ20AA003	30UJA11018	H	H	ES SI	S C/NM	Y (4) Y (5)
SG2 N2 Bubbling Lift Check Valve	30LCQ20AA010	30UJA15018	H	H	SI	S	Y (5)
SG2 N2 Bubbling Globe Isolation Valve	30LCQ20AA011	30UJA15018	H	H	SI	S C/NM	Y (4) Y (5)
SG2 BD Flowrate Control Valve	30LCQ20AA104	30UJA11018	H	H	SI	S C/NM	Y (4) Y (5)
SG2 BD Flow Rate Instr. Globe Valve 1	30LCQ20AA301	30UJA11014	H	H	SI	S C/NM	Y (4) Y (5)
SG2 BD Flow Rate Instr. Globe Valve 2	30LCQ20AA302	30UJA11014	H	H	SI	S C/NM	Y (4) Y (5)
Drain valVe for SG #2	30LCQ20AA401	30UJA15004	H	H	SI	S C/NM	Y (4) Y (5)
SG2 Hot Leg BD Sampling Globe Valve #1	30LCQ20AA601	30UJA15014	H	H	SI	S C/NM	Y (4) Y (5)
SG2 BD Flow Rate Instr. Globe Valve #2	30LCQ20AA602	30UJA15014	H	H	SI	S C/NM	Y (4) Y (5)
SG2 BD Flow Rate Sensor	30LCQ20CF001	30UJA11005	H	H	SI	S	Y (5)
Position of SG2 BD Flowrate Ctrl Valve	30LCQ20CG104	30UJA11018	H	H	SI	S C/NM	Y (4) Y (5)
SG2 BD Temperature Sensor	30LCQ20CT001	30UJA11014	H	H	SI	S	Y (5)

Table 3.10-1—List of Seismically and Dynamically Qualified Mechanical and Electrical Equipment (Sheet 127 of 197)

Name Tag (Equipment Description)	Tag Number	Local Area KKS ID (Room Location)	EQ Environment (Note 1)	Radiation Environment Zone (Note 2)	EQ Designated Function (Note 3)		Safety Class (Note 4)		EQ Program Designation (Note 5)	
SG3 Hot Leg BD Gate Isolation Valve	30LCQ30AA001	30UJA15007	H	H	ES	SI	S	C/NM	Y (4)	Y (5)
SG3 Cold Leg BD Gate Isolation Valve	30LCQ30AA002	30UJA15007	H	H	ES	SI	S	C/NM	Y (4)	Y (5)
SG3 Common BD Gate Isolation Valve	30LCQ30AA003	30UJA11018	H	H	ES	SI	S	C/NM	Y (4)	Y (5)
SG3 N2 Bubbling Lift Check Valve	30LCQ30AA010	30UJA15018	H	H		SI	S	C/NM	Y (4)	Y (5)
SG3 N2 Bubbling Globe Valve Isolation	30LCQ30AA011	30UJA15018	H	H		SI	S	C/NM	Y (4)	Y (5)
SG Transfer Globe Valve b/t SGs 3 & 4	30LCQ30AA012	30UJA23007	H	H	ES	SI	S	C/NM	Y (4)	Y (5)
SG3 BD Flowrate Control Valve	30LCQ30AA104	30UJA11018	H	H		SI	S	C/NM	Y (4)	Y (5)
SG3 BD Flow Rate Instr. Globe Valve #1	30LCQ30AA301	30UJA11015	H	H		SI	S	C/NM	Y (4)	Y (5)
SG3 BD Flowrate Instr. Globe Valve #2	30LCQ30AA302	30UJA11015	H	H		SI	S	C/NM	Y (4)	Y (5)
SG3 Manual Drain Globe Valve	30LCQ30AA401	30UJA15007	H	H		SI	S	C/NM	Y (4)	Y (5)
Fill Vent Globe Valve	30LCQ30AA501	30UJA23007	H	H		SI	S	C/NM	Y (4)	Y (5)
Fill Vent Globe Valve	30LCQ30AA502	30UJA23007	H	H		SI	S	C/NM	Y (4)	Y (5)
SG3 Hot Leg BD Sampling Globe Valve	30LCQ30AA601	30UJA15015	H	H		SI	S	C/NM	Y (4)	Y (5)
SG3 Cold Leg BD Sampling Globe Valve	30LCQ30AA602	30UJA15015	H	H		SI	S	C/NM	Y (4)	Y (5)
SG3 BD Flow Rate Sensor	30LCQ30CF001	30UJA11006	H	H		SI	S			Y (5)
Position of SG3 BD Flowrate Ctrl Valve	30LCQ30CG104	30UJA11018	H	H		SI	S			Y (5)
SG3 BD Temperature Sensor	30LCQ30CT001	30UJA11007	H	H		SI	S			Y (5)
SG4 Hot Leg BD Gate Isolation Valve	30LCQ40AA001	30UJA15008	H	H	ES	SI	S	C/NM	Y (4)	Y (5)
SG4 Cold Leg BD Isolation Gate Valve	30LCQ40AA002	30UJA15008	H	H	ES	SI	S	C/NM	Y (4)	Y (5)
SG4 Common BD Isolation Gate Valve	30LCQ40AA003	30UJA11018	H	H	ES	SI	S	C/NM	Y (4)	Y (5)
SG4 N2 Bubbling Lift Check Valve	30LCQ40AA010	30UJA15018	H	H		SI	S	C/NM	Y (4)	Y (5)
SG4 N2 Bubbling Globe Isolation Valve	30LCQ40AA011	30UJA15018	H	H		SI	S	C/NM	Y (4)	Y (5)
SG4 BD Flowrate Control Valve	30LCQ40AA104	30UJA11018	H	H		SI	S	C/NM	Y (4)	Y (5)
SG4 BD Flowrate Instr. Globe Valve #1	30LCQ40AA301	30UJA11016	H	H		SI	S	C/NM	Y (4)	Y (5)
SG4 BD Flowrate Instr. Globe Valve #2	30LCQ40AA302	30UJA15018	H	H		SI	S	C/NM	Y (4)	Y (5)
SG4 Drain Globe Valve	30LCQ40AA401	30UJA15008	H	H		SI	S	C/NM	Y (4)	Y (5)
SG4 Hot Leg BD Sampling Globe Valve	30LCQ40AA601	30UJA15016	H	H		SI	S	C/NM	Y (4)	Y (5)
SG4 Cold Leg BD Sampling Globe Valve	30LCQ40AA602	30UJA15008	H	H		SI	S	C/NM	Y (4)	Y (5)
SG4 BD Flow Rate Sensor	30LCQ40CF001	30UJA11008	H	H		SI	S			Y (5)
Position of SG4 BD Flowrate Ctrl Valve	30LCQ40CG104	30UJA11018	H	H		SI	S			Y (5)
Flash Tank Pressure Instr Globe Valve 1	30LCQ50AA301	30UJA07018	H	H		SI	S	C/NM	Y (4)	Y (5)
Flash Tank Pressure Instr Globe Valve 2	30LCQ50AA302	30UJA07018	H	H		SI	S	C/NM	Y (4)	Y (5)
SGBD Flash Tank Pressure Tap Valve	30LCQ50AA310	30UJA07018	H	H		SI	S	C/NM	Y (4)	Y (5)

Table 3.10-1—List of Seismically and Dynamically Qualified Mechanical and Electrical Equipment (Sheet 128 of 197)

Name Tag (Equipment Description)	Tag Number	Local Area KKS ID (Room Location)	EQ Environment (Note 1)	Radiation Environment Zone (Note 2)	EQ Designated Function (Note 3)			Safety Class (Note 4)		EQ Program Designation (Note 5)		
SGBD FT LVL INSTR Globe Valve 1a	30LCQ50AA322	30UJA07018	H	H			SI	S	C/NM		Y (4)	Y (5)
SGBD FT LVL INSTR Globe Valve 1b	30LCQ50AA323	30UJA07018	H	H			SI	S	C/NM		Y (4)	Y (5)
SGBD FT LVL INSTR Globe Valve 2a	30LCQ50AA325	30UJA07018	H	H			SI	S	C/NM		Y (4)	Y (5)
SGBD FT LVL INSTR Globe Valve 2b	30LCQ50AA326	30UJA07018	H	H			SI	S	C/NM		Y (4)	Y (5)
SGBD Flash Tank (FT)	30LCQ50BB001	30UJA11018	H	H			SI	S				Y (5)
SGBD FT Lvl Instr. Buffer Tank #1	30LCQ50BB321	30UJA11018	H	H			SI	S				Y (5)
SGBD FT Lvl Instr. Buffer Tank #2	30LCQ50BB324	30UJA11018	H	H			SI	S				Y (5)
SGBD Flash Tank Level Sensor 1	30LCQ50CL001	30UJA07018	H	H			SI	S				Y (5)
SGBD Flash Tank Level Sensor 2	30LCQ50CL002	30UJA07018	H	H			SI	S				Y (5)
SGBD Flash Tank Pressure Sensor 1	30LCQ50CP001	30UJA07018	H	H			SI	S				Y (5)
SGBD Flash Tank Pressure Sensor 2	30LCQ50CP002	30UJA07018	H	H			SI	S				Y (5)
Gate Valve b/t SGBD FT and 1stS.BDcooler	30LCQ51AA001	30UJA07018	H	H			SI	S	C/NM		Y (4)	Y (5)
SGBD Flashed Condensate Inside C-IV	30LCQ51AA002	30UJA07015	H	H	ES	PAM	SI	S	C/NM		Y (4)	Y (5)
SGBD Flashed Condensate Outer C-IV	30LCQ51AA003	34UJH05004	M	H	ES	PAM	SI	S	C/NM	Y (3)		Y (5)
1stS.SGBD Cooler Bypass Gate Valve 1	30LCQ51AA074	30UJA07018	H	H			SI	S	C/NM		Y (4)	Y (5)
1stS.SGBD Cooler Bypass Gate Valve 2	30LCQ51AA075	30UJA07018	H	H			SI	S	C/NM		Y (4)	Y (5)
1stS.SGBD Cooler Gate Isolation Valve #1	30LCQ51AA083	30UJA07018	H	H			SI	S	C/NM		Y (4)	Y (5)
1stS.SGBD Cooler Gate Isolation Valve 2	30LCQ51AA084	30UJA07018	H	H			SI	S	C/NM		Y (4)	Y (5)
1stS.SGBD Cooler Gate Isolation Valve 3	30LCQ51AA086	30UJA07018	H	H			SI	S	C/NM		Y (4)	Y (5)
SGBD Containment Penetration Safety Valv	30LCQ51AA198	30UJA07015	H	H	ES		SI	S	C/NM		Y (4)	Y (5)
Plug V. for L.T. Test of JMK60BQ019	30LCQ51AA301	30UJA07015	H	H			SI	S	C/NM		Y (4)	Y (5)
Press Tap PV 1 for 1stS. SGBD Cooler	30LCQ51AA383	30UJA07018	H	H			SI	S	C/NM		Y (4)	Y (5)
Press Tap PV 2 for 1stS. SGBD Cooler	30LCQ51AA384	30UJA07018	H	H			SI	S	C/NM		Y (4)	Y (5)
SGBD Flash Tank Drain Motor Plug Valve	30LCQ51AA401	30UJA07018	H	H			SI	S	C/NM		Y (4)	Y (5)
SGBD Drain Plug Valve to KT	30LCQ51AA413	30UJA07018	H	H			SI	S	C/NM		Y (4)	Y (5)
SGBD Containment Penetration Drain Plug	30LCQ51AA414	34UJH05004	M	H			SI	S	C/NM	Y (3)		Y (5)
KT Drain Plug Valve Hose Connection	30LCQ51AA434	34UJH05004	M	H			SII	NS-AQ	C/NM	Y (3)		Y (5)
KT Drain Plug Valve	30LCQ51AA441	30UJA07018	H	H			SI	S	C/NM		Y (4)	Y (5)
KTD Drain Plug Valve from SGBD	30LCQ51AA488	30UJA07018	H	H			SI	S	C/NM		Y (4)	Y (5)
KTD Vent Plug Valve from LCQ	30LCQ51AA503	30UJA07018	H	H			SI	S	C/NM		Y (4)	Y (5)
KTC Vent Plug Valve from SGBD	30LCQ51AA504	34UJH05004	M	H			SII	NS-AQ	C/NM	Y (3)		Y (5)
KTD Drain Plug Valve	30LCQ51AA531	30UJA07018	H	H			SI	S	C/NM		Y (4)	Y (5)
KTD vEnt Plug Valve from SGBD	30LCQ51AA584	30UJA07018	H	H			SI	S	C/NM		Y (4)	Y (5)

Table 3.10-1—List of Seismically and Dynamically Qualified Mechanical and Electrical Equipment (Sheet 129 of 197)

Name Tag (Equipment Description)	Tag Number	Local Area KKS ID (Room Location)	EQ Environment (Note 1)	Radiation Environment Zone (Note 2)	EQ Designated Function (Note 3)	Safety Class (Note 4)	EQ Program Designation (Note 5)
First Stage (1stS.) SGBD Cooler Unit #1	30LCQ51AC001	30UJA07018	H	H	SI	S	Y (5)
First Stage (1stS.) SGBD Cooler Unit #2	30LCQ51AC002	30UJA07018	H	H	SI	S	Y (5)
Flash Tank Temperature Sensor	30LCQ51CT001	30UJA07018	H	H	SI	S	Y (5)
1stS.SGBD cooler outlet temp sensor #1	30LCQ51CT002	30UJA07018	H	H	SI	S	Y (5)
1stS. SGBD Cooler Outlet Temp Sensor #2	30LCQ51CT003	30UJA07018	H	H	SI	S	Y (5)
SGBD Flash Tank Drain Thermalwell	30LCQ51CT501	30UJA07018	H	H	SI	S	Y (5)
1stS. SGBD Cooler Outlet Thermalwell	30LCQ51CT502	30UJA07018	H	H	SI	S	Y (5)
Thermal wEll within 1stS. SGBD Cooler	30LCQ51CT550	30UJA07018	H	H	SI	S	Y (5)
Flashed Steam SGBD Inside C-IV	30LCQ52AA001	30UJA34014	H	H	ES PAM SI	S C/NM	Y (4) Y (5)
Flashed Steam SGBD Outlet C-IV	30LCQ52AA002	32UJE34003	M	M	ES PAM SI	S C/NM	Y (5)
Flash Tank Safety Valve	30LCQ52AA191	30UJA11018	H	H	SI	S C/NM	Y (4) Y (5)
L.T. Test Plug Valve 1 for 30JMK60 BQ205	30LCQ52AA302	30UJA34014	H	H	SI	S C/NM	Y (4) Y (5)
L.T. Test Plug Valve 3 for 30JMK60 BQ205	30LCQ52AA305	30UJA34014	H	H	SI	S C/NM	Y (4) Y (5)
KTE Drain Plug Valve from SGBD	30LCQ52AA411	32UJE34003	M	M	SI	S C/NM	Y (5)
SGBD Vent Plug Valve to KTD	30LCQ52AA511	30UJA34014	H	H	SI	S C/NM	Y (4) Y (5)
Chemical & Volume Control System (CVCS)							
KBA							
RCS Boundary Isolation Valve	30KBA10AA001	30UJA11002	H	H	ES SI	S C/NM	Y(4) Y (5)
RCS Boundary Isolation Valve	30KBA10AA002	30UJA11022	H	H	ES SI	S C/NM	Y(4) Y (5)
Charging Line Cross Connect Isolation Valve	30KBA10AA003	30UJA11023	H	H	SI	S C/NM	Y(4) Y (5)
Letdown Line Pressure Transmitter Isolat	30KBA10AA301	30UJA07016	H	H	SI	S C/NM	Y(4) Y (5)
Regenerative Heat Exchanger Tube Side Dr	30KBA10AA401	30UJA11023	H	H	SI	S C/NM	Y(4) Y (5)
Regenerative Heat Exchanger Tube Side Dr	30KBA10AA402	30UJA11023	H	H	SI	S C/NM	Y(4) Y (5)
Regenerative Heat Exchanger Shell Side D	30KBA10AA404	30UJA11023	H	H	SI	S C/NM	Y(4) Y (5)
Regenerative Heat Exchanger Shell Side D	30KBA10AA405	30UJA11023	H	H	SI	S C/NM	Y(4) Y (5)
Regenerative Heat Exchanger Tube Side Dr	30KBA10AA406	30UJA11023	H	H	SI	S C/NM	Y(4) Y (5)
Regenerative Heat Exchanger Shell Side D	30KBA10AA407	30UJA11023	H	H	SI	S C/NM	Y(4) Y (5)
Letdown Line Drain Valve	30KBA10AA408	30UJA11023	H	H	SI	S C/NM	Y(4) Y (5)
Letdown Line Drain Valve	30KBA10AA409	30UJA11022	H	H	SI	S C/NM	Y(4) Y (5)
Letdown Line Drain Valve	30KBA10AA410	30UJA11023	H	H	SI	S C/NM	Y(4) Y (5)
Regenerative Heat Exchanger Tube Side Ve	30KBA10AA501	30UJA11023	H	H	SI	S C/NM	Y(4) Y (5)
Regenerative Heat Exchanger Tube Side Ve	30KBA10AA502	30UJA11023	H	H	SI	S C/NM	Y(4) Y (5)

Table 3.10-1—List of Seismically and Dynamically Qualified Mechanical and Electrical Equipment (Sheet 130 of 197)

Name Tag (Equipment Description)	Tag Number	Local Area KKS ID (Room Location)	EQ Environment (Note 1)	Radiation Environment Zone (Note 2)	EQ Designated Function (Note 3)	Safety Class (Note 4)		EQ Program Designation (Note 5)	
Regenerative Heat Exchanger Shell Side V	30KBA10AA504	30UJA11023	H	H	SI	S	C/NM	Y(4)	Y (5)
Regenerative Heat Exchanger Shell Side V	30KBA10AA505	30UJA11023	H	H	SI	S	C/NM	Y(4)	Y (5)
Regenerative Heat Exchanger Shell Side V	30KBA10AA506	30UJA11023	H	H	SI	S	C/NM	Y(4)	Y (5)
Regenerative Heat Exchanger Tube Side Ve	30KBA10AA507	30UJA11023	H	H	SI	S	C/NM	Y(4)	Y (5)
Regenerative Heat Exchanger	30KBA10AC001	30UJA11024	H	H	SI	S			Y (5)
Regenerative Heat Exchanger Tube Side Ve	30KBA10BP501	30UJA11023	H	H	SI	S			Y (5)
Regenerative Heat Exchanger Shell Side V	30KBA10BP502	30UJA11023	H	H	SI	S			Y (5)
#1 HP Cooler Inlet Isolation Valve	30KBA11AA001	30UJA07028	H	H	SI	S	C/NM	Y(4)	Y (5)
#1 HP Cooler Outlet Isolation Valve	30KBA11AA003	30UJA07028	H	H	SI	S	C/NM	Y(4)	Y (5)
#1 HP Reducing Station Control Valve	30KBA11AA102	30UJA07028	H	H	SI	S	C/NM	Y(4)	Y (5)
#1 HP Cooler Outlet Flow Transmitter Iso	30KBA11AA301	30UJA07016	H	H	SI	S	C/NM	Y(4)	Y (5)
#1 HP Cooler Outlet Flow Transmitter Iso	30KBA11AA302	30UJA07016	H	H	SI	S	C/NM	Y(4)	Y (5)
#1 HP Cooler Outlet Flow Transmitter Iso	30KBA11AA303	30UJA07016	H	H	SI	S	C/NM	Y(4)	Y (5)
#1 HP Cooler Outlet Flow Transmitter Iso	30KBA11AA304	30UJA07016	H	H	SI	S	C/NM	Y(4)	Y (5)
#1 HP Cooler Outlet Flow Transmitter Iso	30KBA11AA305	30UJA07016	H	H	SI	S	C/NM	Y(4)	Y (5)
#1 HP Cooler Outlet Flow Transmitter Iso	30KBA11AA306	30UJA07016	H	H	SI	S	C/NM	Y(4)	Y (5)
#1 HP Cooler Outlet Pressure Transmitter	30KBA11AA310	30UJA07016	H	H	SI	S	C/NM	Y(4)	Y (5)
#1 HP Cooler Tube Side Drain Isolation V	30KBA11AA401	30UJA07028	H	H	SI	S	C/NM	Y(4)	Y (5)
#1 HP Cooler Tube Side Drain Isolation V	30KBA11AA402	30UJA07028	H	H	SI	S	C/NM	Y(4)	Y (5)
#1 HP Cooler Shell Side Drain Isolation	30KBA11AA404	30UJA07028	H	H	SI	S	C/NM	Y(4)	Y (5)
Letdown Line Drain Isolation Valve	30KBA11AA405	30UJA07028	H	H	SI	S	C/NM	Y(4)	Y (5)
#1 HP Cooler Tube Side Drain Isolation V	30KBA11AA406	30UJA07028	H	H	SI	S	C/NM	Y(4)	Y (5)
Letdown Line Drain Isolation Valve	30KBA11AA407	30UJA07028	H	H	SI	S	C/NM	Y(4)	Y (5)
#1 Letdown Line Drain Isolation Valve	30KBA11AA408	30UJA07028	H	H	SI	S	C/NM	Y(4)	Y (5)
#1 Letdown Line Drain Isolation Valve	30KBA11AA409	30UJA07028	H	H	SI	S	C/NM	Y(4)	Y (5)
Letdown Line Drain Isolation Valve	30KBA11AA410	30UJA07028	H	H	SI	S	C/NM	Y(4)	Y (5)
#1 HP Cooler Shell Side Vent Isolation V	30KBA11AA501	30UJA07028	H	H	SI	S	C/NM	Y(4)	Y (5)
#1 HP Cooler Tube Side Vent Isolation Va	30KBA11AA502	30UJA11023	H	H	SI	S	C/NM	Y(4)	Y (5)
#1 HP Cooler Tube Side Vent Isolation Va	30KBA11AA503	30UJA11023	H	H	SI	S	C/NM	Y(4)	Y (5)
#1 HP Cooler Outlet Vent Line Isolation	30KBA11AA505	30UJA07028	H	H	SI	S	C/NM	Y(4)	Y (5)
#1 HP Cooler Outlet Vent Line Isolation	30KBA11AA507	30UJA07028	H	H	SI	S	C/NM	Y(4)	Y (5)
#1 HP Cooler Tube Side Vent Isolation Va	30KBA11AA508	30UJA11023	H	H	SI	S	C/NM	Y(4)	Y (5)
#1 High Pressure Cooler	30KBA11AC001	30UJA07027	H	H	SI	S			Y (5)

Table 3.10-1—List of Seismically and Dynamically Qualified Mechanical and Electrical Equipment (Sheet 131 of 197)

Name Tag (Equipment Description)	Tag Number	Local Area KKS ID (Room Location)	EQ Environment (Note 1)	Radiation Environment Zone (Note 2)	EQ Designated Function (Note 3)	Safety Class (Note 4)	EQ Program Designation (Note 5)
#1 High Pressure Cooler Tube Side Vent O	30KBA11BP501	30UJA11023	H	H	SI	S	Y (5)
#2 HP Cooler Inlet Isolation Valve	30KBA12AA001	30UJA07029	H	H	SI	S C/NM	Y(4) Y (5)
#2 HP Cooler Outlet Isolation Valve	30KBA12AA003	30UJA07029	H	H	SI	S C/NM	Y(4) Y (5)
#2 HP Reducing Station Control Valve	30KBA12AA102	30UJA07029	H	H	SI	S C/NM	Y(4) Y (5)
#2 HP Cooler Outlet Flow Transmitter Iso	30KBA12AA301	30UJA07016	H	H	SI	S C/NM	Y(4) Y (5)
#2 HP Cooler Outlet Flow Transmitter Iso	30KBA12AA302	30UJA07016	H	H	SI	S C/NM	Y(4) Y (5)
#2 HP Cooler Outlet Flow Transmitter Iso	30KBA12AA303	30UJA07016	H	H	SI	S C/NM	Y(4) Y (5)
#2 HP Cooler Outlet Flow Transmitter Iso	30KBA12AA304	30UJA07016	H	H	SI	S C/NM	Y(4) Y (5)
#2 HP Cooler Outlet Flow Transmitter Iso	30KBA12AA305	30UJA07016	H	H	SI	S C/NM	Y(4) Y (5)
#2 HP Cooler Outlet Flow Transmitter Iso	30KBA12AA306	30UJA07016	H	H	SI	S C/NM	Y(4) Y (5)
#2 HP Cooler Outlet Pressure Transmitter	30KBA12AA310	30UJA07016	H	H	SI	S C/NM	Y(4) Y (5)
#2 HP Cooler Tube Side Drain Isolation V	30KBA12AA401	30UJA07029	H	H	SI	S C/NM	Y(4) Y (5)
#2 HP Cooler Tube Side Drain Isolation V	30KBA12AA402	30UJA07029	H	H	SI	S C/NM	Y(4) Y (5)
#2 HP Cooler Shell Side Drain Isolation	30KBA12AA404	30UJA07029	H	H	SI	S C/NM	Y(4) Y (5)
Letdown Line Drain Isolation Valve	30KBA12AA405	30UJA07029	H	H	SI	S C/NM	Y(4) Y (5)
#2 HP Cooler Tube Side Drain Isolation V	30KBA12AA406	30UJA07029	H	H	SI	S C/NM	Y(4) Y (5)
Letdown Line Drain Isolation Valve	30KBA12AA407	30UJA07029	H	H	SI	S C/NM	Y(4) Y (5)
#2 Letdown Line Drain Isolation Valve	30KBA12AA408	30UJA07029	H	H	SI	S C/NM	Y(4) Y (5)
#2 Letdown Line Drain Isolation Valve	30KBA12AA409	30UJA07029	H	H	SI	S C/NM	Y(4) Y (5)
Letdown Line Drain Isolation Valve	30KBA12AA410	30UJA07029	H	H	SI	S C/NM	Y(4) Y (5)
#2 HP Cooler Shell Side Vent Isolation V	30KBA12AA501	30UJA07029	H	H	SI	S C/NM	Y(4) Y (5)
#2 HP Cooler Tube Side Vent Isolation Va	30KBA12AA502	30UJA11023	H	H	SI	S C/NM	Y(4) Y (5)
#2 HP Cooler Tube Side Vent Isolation Va	30KBA12AA503	30UJA11023	H	H	SI	S C/NM	Y(4) Y (5)
#2 HP Cooler Outlet Vent Line Isolation	30KBA12AA504	30UJA07029	H	H	SI	S C/NM	Y(4) Y (5)
#2 HP Cooler Outlet Vent Line Isolation	30KBA12AA505	30UJA07029	H	H	SI	S C/NM	Y(4) Y (5)
#2 HP Cooler Tube Side Vent Isolation Va	30KBA12AA507	30UJA11023	H	H	SI	S C/NM	Y(4) Y (5)
#2 High Pressure Cooler	30KBA12AC001	30UJA07026	H	H	SI	S	Y (5)
#2 High Pressure Cooler Tube Side Vent O	30KBA12BP501	30UJA11023	H	H	SI	S	Y (5)
Letdown Line Inside Containment Isolatio	30KBA14AA002	30UJA07016	H	H	ES PAM SI	S C/NM	Y(4) Y (5)
Letdown Line Outside Containment Isolati	30KBA14AA003	30UFA06095	M	H	ES PAM SI	S C/NM	Y(3) Y (5)
LP Letdown Line Isolation Valve	30KBA14AA004	30UFA01095	M	H	SI	S C/NM	Y(3) Y (5)
Letdown to KTA Isolation Valve	30KBA14AA009	30UJA07029	H	H	SI	S C/NM	Y(4) Y (5)
Letdown to KTA Isolation Valve	30KBA14AA011	30UJA07028	H	H	SI	S C/NM	Y(4) Y (5)

Table 3.10-1—List of Seismically and Dynamically Qualified Mechanical and Electrical Equipment (Sheet 132 of 197)

Name Tag (Equipment Description)	Tag Number	Local Area KKS ID (Room Location)	EQ Environment (Note 1)	Radiation Environment Zone (Note 2)	EQ Designated Function (Note 3)			Safety Class (Note 4)		EQ Program Designation (Note 5)		
Letdown Line Check Valve	30KBA14AA012	30UJA07029	H	H			SI	S	C/NM		Y(4)	Y (5)
LP Reducing Station Control Valve	30KBA14AA106	30UFA10095	M	H			SI	S	C/NM	Y(3)		Y (5)
Letdown Line (Inside Containment) Relief	30KBA14AA191	30UJA11023	H	H			SI	S	C/NM		Y(4)	Y (5)
Letdown Line Pressure Transmitter Isolat	30KBA14AA301	30UJA07016	H	H			SI	S	C/NM		Y(4)	Y (5)
Letdown Line Pressure Transmitter Isolat	30KBA14AA302	30UJA07016	H	H			SI	S	C/NM		Y(4)	Y (5)
Letdown Line Pressure Transmitter Isolat	30KBA14AA303	30UJA07016	H	H			SI	S	C/NM		Y(4)	Y (5)
Relief Valve Inlet Drain Isolation Valve	30KBA14AA401	30UJA07016	H	H			SI	S	C/NM		Y(4)	Y (5)
Letdown to KTA Drain Line Isolation Valv	30KBA14AA402	30UJA07028	H	H			SI	S	C/NM		Y(4)	Y (5)
LP Letdown Line Drain Isolation Valve	30KBA14AA404	30UFA01095	M	H			SI	S	C/NM	Y(3)		Y (5)
LP Letdown Line Drain Isolation Valve	30KBA14AA405	30UFA01095	M	H			SI	S	C/NM	Y(3)		Y (5)
Letdown Line Drain Isolation Valve	30KBA14AA408	30UJA07029	H	H			SI	S	C/NM		Y(4)	Y (5)
Letdown Line Drain Isolation Valve	30KBA14AA409	30UJA07029	H	H			SI	S	C/NM		Y(4)	Y (5)
Letdown to KTA Drain Line Isolation Valv	30KBA14AA411	30UJA07028	H	H			SI	S	C/NM		Y(4)	Y (5)
Relief Valve Inlet Drain Isolation Valve	30KBA14AA412	30UJA11023	H	H			SI	S	C/NM		Y(4)	Y (5)
Letdown Line Vent Isolation Valve	30KBA14AA501	30UJA07029	H	H			SI	S	C/NM		Y(4)	Y (5)
Relief Valve Inlet Vent Isolation Valve	30KBA14AA502	30UJA11023	H	H			SI	S	C/NM		Y(4)	Y (5)
LP Letdown Line Vent Isolation Valve	30KBA14AA503	30UFA10095	M	H			SI	S	C/NM	Y(3)		Y (5)
Relief Valve Inlet Vent Isolation Valve	30KBA14AA504	30UJA11023	H	H			SI	S	C/NM		Y(4)	Y (5)
Letdown Line Vent Isolation Valve	30KBA14AA506	30UJA07029	H	H			SI	S	C/NM		Y(4)	Y (5)
Letdown Line Vent to KT Isolation Valve	30KBA14AA507	30UJA07029	H	H			SI	S	C/NM		Y(4)	Y (5)
VCT Outlet Isolation Valve	30KBA21AA001	30UFA06086	M	H	ES		SI	S	C/NM	Y(3)		Y (5)
Letdown to Charging Pump Suction Isolati	30KBA21AA009	30UFA06036	M	H	ES		SI	S	C/NM	Y(3)		Y (5)
Letdown Line Outlet from Gas Separator I	30KBA25AA017	30UFA10082	M	H	ES		SI	S	C/NM	Y(3)		Y (5)
Charging Line Outside Containment Isolat	30KBA34AA002	30UFA06095	M	H	ES	PAM	SI	S	C/NM	Y(3)		Y (5)
Charging Line Inside Containment Isolati	30KBA34AA003	30UJA07016	H	H	ES		SI	S	C/NM		Y(4)	Y (5)
3-Way Regenerative Heater Bypass Valve	30KBA34AA007	30UJA11023	H	H			SI	S	C/NM		Y(4)	Y (5)
Charging to RCS Isolation Valve	30KBA34AA012	30UJA11022	H	H			SI	S	C/NM		Y(4)	Y (5)
Charging Line to RCS Loop 2 Check Valve	30KBA34AA018	30UJA18005	H	H			SI	S	C/NM		Y(4)	Y (5)
Charging Line to RCS Loop 4 Check Valve	30KBA34AA019	30UJA15009	H	H			SI	S	C/NM		Y(4)	Y (5)
Charging Line to RCS Loop 2 Check Valve	30KBA34AA020	30UJA18005	H	H			SI	S	C/NM		Y(4)	Y (5)
Charging Line to RCS Loop 4 Check Valve	30KBA34AA021	30UJA18009	H	H			SI	S	C/NM		Y(4)	Y (5)
Charging Line Relief Valve	30KBA34AA191	30UJA11023	H	H			SI	S	C/NM		Y(4)	Y (5)
Regenerative Heater Bypass Line Drain Is	30KBA34AA401	30UJA11023	H	H			SI	S	C/NM		Y(4)	Y (5)

Table 3.10-1—List of Seismically and Dynamically Qualified Mechanical and Electrical Equipment (Sheet 133 of 197)

Name Tag (Equipment Description)	Tag Number	Local Area KKS ID (Room Location)	EQ Environment (Note 1)	Radiation Environment Zone (Note 2)	EQ Designated Function (Note 3)			Safety Class (Note 4)		EQ Program Designation (Note 5)	
Charging Line Drain Isolation Valve	30KBA34AA402	30UJA11023	H	H			SI	S	C/NM	Y(4)	Y (5)
Charging Line (Inside Containment) Drain	30KBA34AA405	30UJA07016	H	H	ES		SI	S	C/NM	Y(4)	Y (5)
Charging Line (Inside Containment) Drain	30KBA34AA406	30UJA07016	H	H	ES		SI	S	C/NM	Y(4)	Y (5)
Regenerative Heater Bypass Line Drain Is	30KBA34AA407	30UJA11023	H	H			SI	S	C/NM	Y(4)	Y (5)
Charging Line (Inside Containment) Drain	30KBA34AA410	30UJA07016	H	H			SI	S	C/NM	Y(4)	Y (5)
Charging Line (Inside Containment) Drain	30KBA34AA411	30UJA07016	H	H			SI	S	C/NM	Y(4)	Y (5)
Charging Line Drain Isolation Valve	30KBA34AA412	30UJA11023	H	H			SI	S	C/NM	Y(4)	Y (5)
Charging Line Drain Isolation Valve	30KBA34AA413	30UJA11022	H	H			SI	S	C/NM	Y(4)	Y (5)
Charging Line Drain Isolation Valve	30KBA34AA414	30UJA11022	H	H			SI	S	C/NM	Y(4)	Y (5)
Charging Line Drain Isolation Valve	30KBA34AA415	30UJA18005	H	H			SI	S	C/NM	Y(4)	Y (5)
Charging Line Drain Isolation Valve	30KBA34AA416	30UJA18005	H	H			SI	S	C/NM	Y(4)	Y (5)
Charging Line Drain Isolation Valve	30KBA34AA417	30UJA15009	H	H			SI	S	C/NM	Y(4)	Y (5)
Charging Line Drain Isolation Valve	30KBA34AA418	30UJA15009	H	H			SI	S	C/NM	Y(4)	Y (5)
Regenerative Heater Bypass Line Drain Is	30KBA34AA422	30UJA11023	H	H			SI	S	C/NM	Y(4)	Y (5)
Boron Concentration Measurement Transmit	30KBA34CQ857A	30UFA01033	M	H			SI	S			Y (5)
Boron Concentration Measurement Transmit	30KBA34CQ857B	30UFA01033	M	H			SI	S			Y (5)
Boron Concentration Measurement Transmit	30KBA34CQ858A	30UFA01033	M	H			SI	S			Y (5)
Boron Concentration Measurement Transmit	30KBA34CQ858B	30UFA01033	M	H			SI	S			Y (5)
Charging Pump Discharge Temperature Tran	30KBA34CT857A	30UFA01033	M	H			SI	S			Y (5)
Charging Pump Discharge Temperature Tran	30KBA34CT857B	30UFA01033	M	H			SI	S			Y (5)
Charging Pump Discharge Temperature Tran	30KBA34CT858A	30UFA01033	M	H			SI	S			Y (5)
Charging Pump Discharge Temperature Tran	30KBA34CT858B	30UFA01033	M	H			SI	S			Y (5)
Charging to Pressurizer Auxiliary Spray	30KBA35AA001	30UJA11022	H	H			SI	S	C/NM	Y(4)	Y (5)
Charging to Pressurizer Auxiliary Spray	30KBA35AA002	30UJA15019	H	H			SI	S	C/NM	Y(4)	Y (5)
3-Way Pressurizer Auxiliary Spray Contro	30KBA35AA101	30UJA11023	H	H			SI	S	C/NM	Y(4)	Y (5)
Pressurizer Auxiliary Spray Line Drain I	30KBA35AA401	30UJA11023	H	H			SI	S	C/NM	Y(4)	Y (5)
Pressurizer Auxiliary Spray Line Drain I	30KBA35AA402	30UJA15019	H	H			SI	S	C/NM	Y(4)	Y (5)
Pressurizer Auxiliary Spray Line Drain I	30KBA35AA403	30UJA15019	H	H			SI	S	C/NM	Y(4)	Y (5)
Pressurizer Auxiliary Spray Line Drain I	30KBA35AA404	30UJA15019	H	H			SI	S	C/NM	Y(4)	Y (5)
Pressurizer Auxiliary Spray Line Drain I	30KBA35AA405	30UJA15019	H	H			SI	S	C/NM	Y(4)	Y (5)
Pressurizer Auxiliary Spray Line Drain I	30KBA35AA406	30UJA15019	H	H			SI	S	C/NM	Y(4)	Y (5)
JEW											
RCP Seal Water Injection Outside Contain	30JEW01AA005	30UFA06045	M	H	ES	PAM	SI	S	C/NM	Y(3)	Y (5)

Table 3.10-1—List of Seismically and Dynamically Qualified Mechanical and Electrical Equipment (Sheet 134 of 197)

Name Tag (Equipment Description)	Tag Number	Local Area KKS ID (Room Location)	EQ Environment (Note 1)	Radiation Environment Zone (Note 2)	EQ Designated Function (Note 3)		Safety Class (Note 4)		EQ Program Designation (Note 5)	
RCP Seal Water Injection Inside Containm	30JEW01AA006	30UJA07016	H	H	ES	SI	S	C/NM	Y(4)	Y (5)
RCP Seal Water Injection Line Drain Isol	30JEW01AA412	30UJA07016	H	H	ES	SI	S	C/NM	Y(4)	Y (5)
RCP Seal Water Injection Line Drain Isol	30JEW01AA413	30UJA07016	H	H	ES	SI	S	C/NM	Y(4)	Y (5)
RCP Seal Water Injection Line Drain Isol	30JEW01AA414	30UJA07016	H	H		SI	S	C/NM	Y(4)	Y (5)
RCP Seal Water Injection Line Drain Isol	30JEW01AA415	30UJA07016	H	H		SI	S	C/NM	Y(4)	Y (5)
#1 RCP Seal Water Injection Control Valv	30JEW11AA111	30UJA15002	H	H		SI	S	C/NM	Y(4)	Y (5)
#1 RCP Seal Water Injection Flow Transmi	30JEW11AA301	30UJA11013	H	H		SI	S	C/NM	Y(4)	Y (5)
#1 RCP Seal Water Injection Flow Transmi	30JEW11AA302	30UJA11013	H	H		SI	S	C/NM	Y(4)	Y (5)
#1 RCP Seal Water Leakoff Bypass Inlet M	30JEW12AA013	30UJA18002	H	H		SI	S	C/NM	Y(4)	Y (5)
#1 RCP Seal Water Leakoff Bypass Outlet	30JEW12AA014	30UJA18002	H	H		SI	S	C/NM	Y(4)	Y (5)
#1 RCP Seal Water Leakoff Manual Isolati	30JEW12AA015	30UJA18002	H	H		SI	S	C/NM	Y(4)	Y (5)
#1 RCP Seal Water Leakoff Flow Transmitt	30JEW12AA303	30UJA18013	H	H		SI	S	C/NM	Y(4)	Y (5)
#1 RCP Seal Water Leakoff Flow Transmitt	30JEW12AA304	30UJA18013	H	H		SI	S	C/NM	Y(4)	Y (5)
#2 RCP Seal Water Injection Control Valv	30JEW21AA111	30UJA15005	H	H		SI	S	C/NM	Y(4)	Y (5)
#2 RCP Seal Water Injection Flow Transmi	30JEW21AA301	30UJA15005	H	H		SI	S	C/NM	Y(4)	Y (5)
#2 RCP Seal Water Injection Flow Transmi	30JEW21AA302	30UJA15005	H	H		SI	S	C/NM	Y(4)	Y (5)
#2 RCP Seal Water Leakoff Bypass Inlet M	30JEW22AA013	30UJA18005	H	H		SI	S	C/NM	Y(4)	Y (5)
#2 RCP Seal Water Leakoff Bypass Outlet	30JEW22AA014	30UJA18005	H	H		SI	S	C/NM	Y(4)	Y (5)
#2 RCP Seal Water Leakoff Manual Isolati	30JEW22AA015	30UJA18005	H	H		SI	S	C/NM	Y(4)	Y (5)
#2 RCP Seal Water Leakoff Flow Transmitt	30JEW22AA303	30UJA18005	H	H		SI	S	C/NM	Y(4)	Y (5)
#2 RCP Seal Water Leakoff Flow Transmitt	30JEW22AA304	30UJA18005	H	H		SI	S	C/NM	Y(4)	Y (5)
#3 RCP Seal Water Injection Control Valv	30JEW31AA111	30UJA15006	H	H		SI	S	C/NM	Y(4)	Y (5)
#3 RCP Seal Water Injection Flow Transmi	30JEW31AA301	30UJA11015	H	H		SI	S	C/NM	Y(4)	Y (5)
#3 RCP Seal Water Injection Flow Transmi	30JEW31AA302	30UJA11015	H	H		SI	S	C/NM	Y(4)	Y (5)
#3 RCP Seal Water Leakoff Bypass Inlet M	30JEW32AA013	30UJA18006	H	H		SI	S	C/NM	Y(4)	Y (5)
#3 RCP Seal Water Leakoff Bypass Outlet	30JEW32AA014	30UJA18006	H	H		SI	S	C/NM	Y(4)	Y (5)
#3 RCP Seal Water Leakoff Manual Isolati	30JEW32AA015	30UJA18006	H	H		SI	S	C/NM	Y(4)	Y (5)
#3 RCP Seal Water Leakoff Flow Transmitt	30JEW32AA303	30UJA18006	H	H		SI	S	C/NM	Y(4)	Y (5)
#3 RCP Seal Water Leakoff Flow Transmitt	30JEW32AA304	30UJA18006	H	H		SI	S	C/NM	Y(4)	Y (5)
#4 RCP Seal Water Injection Control Valv	30JEW41AA111	30UJA15009	H	H		SI	S	C/NM	Y(4)	Y (5)
#4 RCP Seal Water Injection Flow Transmi	30JEW41AA301	30UJA11016	H	H		SI	S	C/NM	Y(4)	Y (5)
#4 RCP Seal Water Injection Flow Transmi	30JEW41AA302	30UJA11016	H	H		SI	S	C/NM	Y(4)	Y (5)
#4 RCP Seal Water Leakoff Bypass Inlet M	30JEW42AA013	30UJA18009	H	H		SI	S	C/NM	Y(4)	Y (5)

Table 3.10-1—List of Seismically and Dynamically Qualified Mechanical and Electrical Equipment (Sheet 135 of 197)

Name Tag (Equipment Description)	Tag Number	Local Area KKS ID (Room Location)	EQ Environment (Note 1)	Radiation Environment Zone (Note 2)	EQ Designated Function (Note 3)	Safety Class (Note 4)	EQ Program Designation (Note 5)
#4 RCP Seal Water Leakoff Bypass Outlet	30JEW42AA014	30UJA18009	H	H	SI	S C/NM	Y(4) Y (5)
#4 RCP Seal Water Leakoff Manual Isolati	30JEW42AA015	30UJA18009	H	H	SI	S C/NM	Y(4) Y (5)
#4 RCP Seal Water Leakoff Flow Transmitt	30JEW42AA303	30UJA18009	H	H	SI	S C/NM	Y(4) Y (5)
#4 RCP Seal Water Leakoff Flow Transmitt	30JEW42AA304	30UJA18009	H	H	SI	S C/NM	Y(4) Y (5)
RCP Seal Water Leakoff Inside Containmen	30JEW50AA001	30UJA07016	H	H	ES PAM SI	S C/NM	Y(4) Y (5)
RCP Seal Water Leakoff Outside Containme	30JEW50AA002	30UFA06045	M	H	ES PAM SI	S C/NM	Y(3) Y (5)
RCP Seal Water Leakoff to RC Drain Tk. I	30JEW50AA021	30UJA23002	H	H	SI	S C/NM	Y(4) Y (5)
RCP Seal Water Leakoff Relief Valve	30JEW50AA191	30UJA29003	H	H	SI	S C/NM	Y(4) Y (5)
RCP Seal Water Leakoff Pressure Transmit	30JEW50AA303	30UJA23013	H	H	SI	S C/NM	Y(4) Y (5)
RCP Seal Water Leakoff Line Inside Conta	30JEW50AA407	30UKA06036	M	H	SI	S C/NM	Y(3) Y (5)
RCP Seal Water Leakoff Relief Valve Inle	30JEW50AA503	30UJA29003	H	H	SI	S C/NM	Y(4) Y (5)
RCP Seal Water Leakoff Relief Valve Inle	30JEW50AA504	30UJA29003	H	H	SI	S C/NM	Y(4) Y (5)
RCP Seal Water Leakoff Flow Restrictor	30JEW50BP001	30UJA23013	H	H	SI	S	Y (5)
AUXILIARY SYSTEMS							
Fuel Handling System (FHS)							
New Fuel Storage Racks	FAA01	30UFA23014	M	H	SI	S SI	Y (5)
Underwater Fuel Racks	FAB02	30UFA15022	M	H	SI	S SI	Y (5)

Table 3.10-1—List of Seismically and Dynamically Qualified Mechanical and Electrical Equipment (Sheet 136 of 197)

Name Tag (Equipment Description)	Tag Number	Local Area KKS ID (Room Location)	EQ Environment (Note 1)	Radiation Environment Zone (Note 2)	EQ Designated Function (Note 3)		Safety Class (Note 4)				EQ Program Designation (Note 5)		
Transfer Pit Slot Gate	30FAB11 KB001	30UFA16023	M	H			SI	S		C/NM	Y(3)		Y(5)
Transfer Pit Swivel Gate	30FAB11 KB002	30UFA16023	M	H			SI	S		C/NM	Y(3)		Y(5)
Loading Pit Slot Gate	30FAB12 KB001	30UFA19021	M	H			SI	S		C/NM	Y(3)		Y(5)
Loading Pit Swivel Gate	30FAB12 KB002	30UFA19021	M	H			SI	S		C/NM	Y(3)		Y(5)
RM (Entire Assembly)	FCB01	30UJA29	H	H			SII	NS-AQ	SII				Y (5)
CCU (RB)	FCB30	30UJA29	H	H			SII	NS-AQ	SII				Y (5)
SFM (Entire Assembly)	FCD01	30UFA29015	M	H			SII	NS-AQ	SII				Y (5)
NFE (Entire Assembly)	FCD10	30UFA15022	M	H			SII	NS-AQ	SII				Y (5)
CCU (SFPB)	FCD30	30UFA29	M	H			SII	NS-AQ	SII				Y (5)
FTTF	FCJ01	30UFA16023 / 30UJA15021	H	H			SII	NS-AQ	SII				Y (5)
Transfer Tube and Expansion Joints (Compensators)	FCJ05	30UFA16023 / 30UJA15021	H	H			SI	S	SI	C/NM		Y (4)	Y (5)
Penetration including Loading Pit Bottom Cover	FCJ12	30UFA10015	M	H			SI	S	SI	C/NM	Y (3)		Y (5)
Auxiliary Crane	SMF01	30UFA29015	M	H			SII	NS-AQ	SII				Y (5)
Nuclear Sampling System (NSS)													
RCS HL1 Iso Valve	30KUA10AA001	30UJA18003	M	M			SI	S		C/NM			Y (5)
RCS HL1 Mov Iso Vlv (HP Boundary)	30KUA10AA002	30UJA18003	H	H			SI	S		C/NM		Y (4)	Y (5)
RCS HL1 Inner Cont Iso Vlv	30KUA10AA003	30UJA07016	H	H	ES	PAM	SI	S		C/NM		Y (4)	Y (5)
RCS HL1 Outer Cont Iso Vlv	30KUA10AA004	30UFA06045	M	H	ES	PAM	SI	S		C/NM	Y (3)		Y (5)
RCS HL1 Iso Cont Pressure Relief Vlv	30KUA10AA090	30UJA18003	M	M			SI	S					Y (5)
RCS HL1 Inner Cont Iso Relief Vlv	30KUA10AA091	30UJA07016	M	M			SI	S					Y (5)
RCS HL1 Cont Iso Test Vlv 1	30KUA10AA092	30UJA07016	M	M			SI	S		C/NM			Y (5)
RCS HL1 Cont Iso Test Vlv 2	30KUA10AA093	30UJA07016	M	M			SI	S		C/NM			Y (5)
RCS HL1 Cont Iso Test Vlv 3	30KUA10AA094	30UJA07016	M	M			SI	S		C/NM			Y (5)
RCS HL1 Cont Iso Test Vlv 4	30KUA10AA095	30UJA07016	M	M			SI	S		C/NM			Y (5)
RCS HL1 High Point Vent Vlv 1	30KUA10AA501	30UJA18003	M	M			SI	S		C/NM			Y (5)
RCS HL1 High Point Vent Vlv 2	30KUA10AA502	30UJA18003	M	M			SI	S		C/NM			Y (5)
Pressurizer Mov Sample Vlv	30KUA20AA001	30UJA18019	M	M			SI	S		C/NM			Y (5)
Pressurizer Inner Iso Cont Vlv	30KUA20AA002	30UJA07016	M	M	ES	PAM	SI	S		C/NM			Y (5)
Pressurizer Outer Iso Cont Vlv	30KUA20AA003	30UFA06095	M	H	ES	PAM	SI	S		C/NM	Y (3)		Y (5)
Prz Sample Relief Ckv Vlv	30KUA20AA090	30UJA18019	M	M			SI	S					Y (5)
Prz Test Ckv Vlv	30KUA20AA091	30UJA07016	M	M			SI	S					Y (5)

Table 3.10-1—List of Seismically and Dynamically Qualified Mechanical and Electrical Equipment (Sheet 137 of 197)

Name Tag (Equipment Description)	Tag Number	Local Area KKS ID (Room Location)	EQ Environment (Note 1)	Radiation Environment Zone (Note 2)	EQ Designated Function (Note 3)	Safety Class (Note 4)	EQ Program Designation (Note 5)
Prz Test Vlv 1	30KUA20AA092	30UJA07016	M	M	SI	S C/NM	Y (5)
Prz Test Vlv 2	30KUA20AA093	30UJA07016	M	M	SI	S C/NM	Y (5)
Prz Test Vlv 3	30KUA20AA094	30UJA07016	M	M	SI	S C/NM	Y (5)
Prz Test Vlv 4	30KUA20AA095	30UJA07016	M	M	SI	S C/NM	Y (5)
Prz Sample Vent Vlv 1	30KUA20AA501	30UJA18019	M	M	SI	S C/NM	Y (5)
Prz Sample Vent Vlv 2	30KUA20AA502	30UJA18019	M	M	SI	S C/NM	Y (5)
RCS CL3 Iso Vlv	30KUA30AA001	30UJA18007	M	M	SI	S C/NM	Y (5)
RCS CL3 Iso Vlv	30KUA30AA002	30UJA18007	M	M	SI	S C/NM	Y (5)
RCS CL3 Inner Cont Iso Vlv	30KUA30AA003	30UJA07016	M	M	ES PAM SI	S C/NM	Y (5)
RCS CL3 Outer Cont Iso Vlv	30KUA30AA004	30UFA06095	M	H	ES PAM SI	S C/NM	Y (3) Y (5)
RCS CL3 Test CKV	30KUA30AA090	30UJA18007	M	M	SI	S	Y (5)
RCS CL3 Isolation CKV	30KUA30AA091	30UJA07016	M	M	SI	S	Y (5)
RCS CL3 Test Iso Vlv 1	30KUA30AA092	30UJA07016	M	M	SI	S C/NM	Y (5)
RCS CL3 Test Isv Vlv 2	30KUA30AA093	30UJA07016	M	M	SI	S C/NM	Y (5)
RCS CL3 Test Iso Vlv 3	30KUA30AA094	30UJA07016	M	M	SI	S C/NM	Y (5)
RCS CL3 Test Iso Vlv 4	30KUA30AA095	30UJA07016	M	M	SI	S C/NM	Y (5)
RCS CL3 Vent Vlv 1	30KUA30AA501	30UJA18007	M	M	SI	S C/NM	Y (5)
RCS CL3 Vent Vlv 2	30KUA30AA502	30UJA18007	M	M	SI	S C/NM	Y (5)
KUB10 Cont Iso Inner Vlv	30KUB10AA001	30UJA11016	H	H	ES PAM SI	S C/NM	Y (4) Y (5)
KUB10 Cont Iso Outer Vlv	30KUB10AA002	30UFA10095	M	H	ES PAM SI	S C/NM	Y (3) Y (5)
KUB Cont Iso Test CKV	30KUB10AA091	30UJA11016	H	H	SI	S	Y (5)
KUB Cont Iso Test Vlv 1	30KUB10AA092	30UJA11016	H	H	SI	S C/NM	Y (4) Y (5)
CONT Iso Vlv Outside Containment	30KUL51AA002	34UJH10004	M	H	ES PAM SI	S C/NM	Y (3) Y (5)
CONT Iso Vlv Outside Containment	30KUL51AA003	34UJH10004	M	H	ES PAM SI	S C/NM	Y (3) Y (5)
CONT Iso Vlv Outside Containment	30KUL52AA002	34UJH10004	M	H	ES PAM SI	S C/NM	Y (3) Y (5)
CONT Iso Vlv Outside Cont	30KUL52AA003	34UJH10004	M	H	ES PAM SI	S C/NM	Y (3) Y (5)
Sampling Activity Monitoring System (SAMS)							
As a result of the EQ program screening no components in this system were identifed for seismic qualificaiton.							
Emergency Diesel Generator Set (EDG)							
Turbochargers	30XJA10AN	31UBP01001	M	M	SI	S C/NM	Y (5)
Engine Governor Mechanical	30XJA10AP	31UBP01001	M	M	SI	S C/NM	Y (5)
Engine Governor Electronics	30XJA10AP	31UBP01001	M	M	SI	S	Y (5)

Table 3.10-1—List of Seismically and Dynamically Qualified Mechanical and Electrical Equipment (Sheet 138 of 197)

Name Tag (Equipment Description)	Tag Number	Local Area KKS ID (Room Location)	EQ Environment (Note 1)	Radiation Environment Zone (Note 2)	EQ Designated Function (Note 3)	Safety Class (Note 4)		EQ Program Designation (Note 5)
Diesel Engine	30XJA10AV	31UBP01001	M	M	SI	S	C/NM	Y (5)
Engine Level	30XJA10CL	31UBP01001	M	M	SI	S		Y (5)
Engine Pressure	30XJA10CP	31UBP01001	M	M	SI	S		Y (5)
Engine Speed	30XJA10CS	31UBP01001	M	M	SI	S		Y (5)
Turbochargers	30XJA20AN	32UBP01001	M	M	SI	S	C/NM	Y (5)
Engine Governor Mechanical	30XJA20AP	32UBP01001	M	M	SI	S	C/NM	Y (5)
Engine Governor Electronics	30XJA20AP	32UBP01001	M	M	SI	S		Y (5)
Diesel Engine	30XJA20AV	32UBP01001	M	M	SI	S	C/NM	Y (5)
Engine Level	30XJA20CL	32UBP01001	M	M	SI	S		Y (5)
Engine Pressure	30XJA20CP	32UBP01001	M	M	SI	S		Y (5)
Engine Speed	30XJA20CS	32UBP01001	M	M	SI	S		Y (5)
Turbochargers	30XJA30AN	33UBP01001	M	M	SI	S	C/NM	Y (5)
Engine Governor Mechanical	30XJA30AP	33UBP01001	M	M	SI	S	C/NM	Y (5)
Engine Governor Electronics	30XJA30AP	33UBP01001	M	M	SI	S		Y (5)
Diesel Engine	30XJA30AV	33UBP01001	M	M	SI	S	C/NM	Y (5)
Engine Level	30XJA30CL	33UBP01001	M	M	SI	S		Y (5)
Engine Pressure	30XJA30CP	33UBP01001	M	M	SI	S		Y (5)
Engine Speed	30XJA30CS	33UBP01001	M	M	SI	S		Y (5)
Turbochargers	30XJA40AN	34UBP01001	M	M	SI	S	C/NM	Y (5)
Engine Governor Mechanical	30XJA40AP	34UBP01001	M	M	SI	S	C/NM	Y (5)
Engine Governor Electronics	30XJA40AP	34UBP01001	M	M	SI	S		Y (5)
Diesel Engine	30XJA40AV	34UBP01001	M	M	SI	S	C/NM	Y (5)
Engine Level	30XJA40CL	34UBP01001	M	M	SI	S		Y (5)
Engine Pressure	30XJA40CP	34UBP01001	M	M	SI	S		Y (5)
Engine Speed	30XJA40CS	34UBP01001	M	M	SI	S		Y (5)
Cooling Water System Valves	30XJG10AA	31UBP01001	M	M	SI	S	C/NM	Y (5)
Cooling Water System Heat Exchangers	30XJG10AC	31UBP01001	M	M	SI	S	C/NM	Y (5)
Cooling Water System Pumps	30XJG10AP	31UBP01001	M	M	SI	S	C/NM	Y (5)
Cooling Water System Vents	30XJG10AT	31UBP01001	M	M	SI	S	C/NM	Y (5)
Cooling Water System Tanks	30XJG10BB	31UBP01001	M	M	SI	S	C/NM	Y (5)
Cooling Water System Orifices	30XJG10BP	31UBP01001	M	M	SI	S		Y (5)
Cooling Water System Level	30XJG10CL	31UBP01001	M	M	SI	S		Y (5)
Cooling Water System Pressure	30XJG10CP	31UBP01001	M	M	SI	S		Y (5)

Table 3.10-1—List of Seismically and Dynamically Qualified Mechanical and Electrical Equipment (Sheet 139 of 197)

Name Tag (Equipment Description)	Tag Number	Local Area KKS ID (Room Location)	EQ Environment (Note 1)	Radiation Environment Zone (Note 2)	EQ Designated Function (Note 3)	Safety Class (Note 4)		EQ Program Designation (Note 5)
Cooling Water System Temperature	30XJG10CT	31UBP01001	M	M	SI	S		Y (5)
Cooling Water System Valves	30XJG20AA	32UBP01001	M	M	SI	S	C/NM	Y (5)
Cooling Water System Heat Exchangers	30XJG20AC	32UBP01001	M	M	SI	S	C/NM	Y (5)
Cooling Water System Pumps	30XJG20AP	32UBP01001	M	M	SI	S	C/NM	Y (5)
Cooling Water System Vents	30XJG20AT	32UBP01001	M	M	SI	S	C/NM	Y (5)
Cooling Water System Tanks	30XJG20BB	32UBP01001	M	M	SI	S	C/NM	Y (5)
Cooling Water System Orifices	30XJG20BP	32UBP01001	M	M	SI	S		Y (5)
Cooling Water System Level	30XJG20CL	32UBP01001	M	M	SI	S		Y (5)
Cooling Water System Pressure	30XJG20CP	32UBP01001	M	M	SI	S		Y (5)
Cooling Water System Temperature	30XJG20CT	32UBP01001	M	M	SI	S		Y (5)
Cooling Water System Valves	30XJG30AA	33UBP01001	M	M	SI	S	C/NM	Y (5)
Cooling Water System Heat Exchangers	30XJG30AC	33UBP01001	M	M	SI	S	C/NM	Y (5)
Cooling Water System Pumps	30XJG30AP	33UBP01001	M	M	SI	S	C/NM	Y (5)
Cooling Water System Vents	30XJG30AT	33UBP01001	M	M	SI	S	C/NM	Y (5)
Cooling Water System Tanks	30XJG30BB	33UBP01001	M	M	SI	S	C/NM	Y (5)
Cooling Water System Orifices	30XJG30BP	33UBP01001	M	M	SI	S		Y (5)
Cooling Water System Level	30XJG30CL	33UBP01001	M	M	SI	S		Y (5)
Cooling Water System Pressure	30XJG30CP	33UBP01001	M	M	SI	S		Y (5)
Cooling Water System Temperature	30XJG30CT	33UBP01001	M	M	SI	S		Y (5)
Cooling Water System Valves	30XJG40AA	34UBP01001	M	M	SI	S	C/NM	Y (5)
Cooling Water System Heat Exchangers	30XJG40AC	34UBP01001	M	M	SI	S	C/NM	Y (5)
Cooling Water System Pumps	30XJG40AP	34UBP01001	M	M	SI	S	C/NM	Y (5)
Cooling Water System Vents	30XJG40AT	34UBP01001	M	M	SI	S	C/NM	Y (5)
Cooling Water System Tanks	30XJG40BB	34UBP01001	M	M	SI	S	C/NM	Y (5)
Cooling Water System Orifices	30XJG40BP	34UBP01001	M	M	SI	S		Y (5)
Cooling Water System Level	30XJG40CL	34UBP01001	M	M	SI	S		Y (5)
Cooling Water System Pressure	30XJG40CP	34UBP01001	M	M	SI	S		Y (5)
Cooling Water System Temperature	30XJG40CT	34UBP01001	M	M	SI	S		Y (5)
Fuel Oil System Valves	30XJN10AA	31UBP01001	M	M	SI	S	C/NM	Y (5)
Fuel Oil System Pumps	30XJN10AP	31UBP01001	M	M	SI	S	C/NM	Y (5)
Fuel Oil System Vents	30XJN10AT	31UBP01003	M	M	SI	S	C/NM	Y (5)
Fuel Oil System Tanks	30XJN10BB	31UBP01001	M	M	SI	S	C/NM	Y (5)
Fuel Oil System Orifices	30XJN10BP	31UBP01001	M	M	SI	S		Y (5)

Table 3.10-1—List of Seismically and Dynamically Qualified Mechanical and Electrical Equipment (Sheet 140 of 197)

Name Tag (Equipment Description)	Tag Number	Local Area KKS ID (Room Location)	EQ Environment (Note 1)	Radiation Environment Zone (Note 2)	EQ Designated Function (Note 3)	Safety Class (Note 4)		EQ Program Designation (Note 5)
Fuel Oil System Level	30XJN10CL	31UBP01003	M	M	SI	S		Y (5)
Fuel Oil System Pressure	30XJN10CP	31UBP01001	M	M	SI	S		Y (5)
Fuel Oil System Valves	30XJN20AA	32UBP01001	M	M	SI	S	C/NM	Y (5)
Fuel Oil System Pumps	30XJN20AP	32UBP01001	M	M	SI	S	C/NM	Y (5)
Fuel Oil System Vents	30XJN20AT	32UBP01003	M	M	SI	S	C/NM	Y (5)
Fuel Oil System Tanks	30XJN20BB	32UBP01001	M	M	SI	S	C/NM	Y (5)
Fuel Oil System Orifices	30XJN20BP	32UBP01001	M	M	SI	S		Y (5)
Fuel Oil System Level	30XJN20CL	32UBP01003	M	M	SI	S		Y (5)
Fuel Oil System Pressure	30XJN20CP	32UBP01001	M	M	SI	S		Y (5)
Fuel Oil System Valves	30XJN30AA	33UBP01001	M	M	SI	S	C/NM	Y (5)
Fuel Oil System Pumps	30XJN30AP	33UBP01001	M	M	SI	S	C/NM	Y (5)
Fuel Oil System Vents	30XJN30AT	33UBP01003	M	M	SI	S	C/NM	Y (5)
Fuel Oil System Tanks	30XJN30BB	33UBP01001	M	M	SI	S	C/NM	Y (5)
Fuel Oil System Orifices	30XJN30BP	33UBP01001	M	M	SI	S		Y (5)
Fuel Oil System Level	30XJN30CL	33UBP01003	M	M	SI	S		Y (5)
Fuel Oil System Pressure	30XJN30CP	33UBP01001	M	M	SI	S		Y (5)
Fuel Oil System Valves	30XJN40AA	34UBP01001	M	M	SI	S	C/NM	Y (5)
Fuel Oil System Pumps	30XJN40AP	34UBP01001	M	M	SI	S	C/NM	Y (5)
Fuel Oil System Vents	30XJN40AT	34UBP01003	M	M	SI	S	C/NM	Y (5)
Fuel Oil System Tanks	30XJN40BB	34UBP01001	M	M	SI	S	C/NM	Y (5)
Fuel Oil System Orifices	30XJN40BP	34UBP01001	M	M	SI	S		Y (5)
Fuel Oil System Level	30XJN40CL	34UBP01003	M	M	SI	S		Y (5)
Fuel Oil System Pressure	30XJN40CP	34UBP01001	M	M	SI	S		Y (5)
Combustion Air System Valves	30XJQ10AA	31UBP01001	M	M	SI	S	C/NM	Y (5)
Combustion Air System Filters/Strainers	30XJQ10AT	31UBP01001	M	M	SI	S	C/NM	Y (5)
Combustion Air System Silencers	30XJQ10BS	31UBP01001	M	M	SI	S		Y (5)
Combustion Air System Pressure	30XJQ10CP	31UBP01001	M	M	SI	S		Y (5)
Combustion Air System Valves	30XJQ20AA	32UBP01001	M	M	SI	S	C/NM	Y (5)
Combustion Air System Filters/Strainers	30XJQ20AT	32UBP01001	M	M	SI	S	C/NM	Y (5)
Combustion Air System Silencers	30XJQ20BS	32UBP01001	M	M	SI	S		Y (5)
Combustion Air System Pressure	30XJQ20CP	32UBP01001	M	M	SI	S		Y (5)
Combustion Air System Valves	30XJQ30AA	33UBP01001	M	M	SI	S	C/NM	Y (5)
Combustion Air System Filters/Strainers	30XJQ30AT	33UBP01001	M	M	SI	S	C/NM	Y (5)

Table 3.10-1—List of Seismically and Dynamically Qualified Mechanical and Electrical Equipment (Sheet 141 of 197)

Name Tag (Equipment Description)	Tag Number	Local Area KKS ID (Room Location)	EQ Environment (Note 1)	Radiation Environment Zone (Note 2)	EQ Designated Function (Note 3)	Safety Class (Note 4)		EQ Program Designation (Note 5)
Combustion Air System Silencers	30XJQ30BS	33UBP01001	M	M	SI	S		Y (5)
Combustion Air System Pressure	30XJQ30CP	33UBP01001	M	M	SI	S		Y (5)
Combustion Air System Valves	30XJQ40AA	34UBP01001	M	M	SI	S	C/NM	Y (5)
Combustion Air System Filters/Strainers	30XJQ40AT	34UBP01001	M	M	SI	S	C/NM	Y (5)
Combustion Air System Silencers	30XJQ40BS	34UBP01001	M	M	SI	S		Y (5)
Combustion Air System Pressure	30XJQ40CP	34UBP01001	M	M	SI	S		Y (5)
Exhaust Gas System Valves	30XJR10AA	31UBP01001	M	M	SII	NS-AQ	C/NM	Y (5)
Exhaust Gas System Silencers	30XJR10BS	31UBP01001	M	M	SII	NS-AQ		Y (5)
Exhaust Gas System Pressure	30XJR10CP	31UBP01001	M	M	SI	S		Y (5)
Exhaust Gas System Valves	30XJR20AA	32UBP01001	M	M	SII	NS-AQ	C/NM	Y (5)
Exhaust Gas System Silencers	30XJR20BS	32UBP01001	M	M	SII	NS-AQ		Y (5)
Exhaust Gas System Pressure	30XJR20CP	32UBP01001	M	M	SI	S		Y (5)
Exhaust Gas System Valves	30XJR30AA	33UBP01001	M	M	SII	NS-AQ	C/NM	Y (5)
Exhaust Gas System Silencers	30XJR30BS	33UBP01001	M	M	SII	NS-AQ		Y (5)
Exhaust Gas System Pressure	30XJR30CP	33UBP01001	M	M	SI	S		Y (5)
Exhaust Gas System Valves	30XJR40AA	34UBP01001	M	M	SII	NS-AQ	C/NM	Y (5)
Exhaust Gas System Silencers	30XJR40BS	34UBP01001	M	M	SII	NS-AQ		Y (5)
Exhaust Gas System Pressure	30XJR40CP	34UBP01001	M	M	SI	S		Y (5)
Lube Oil System Valves	30XJV10AA	31UBP01001	M	M	SI	S	C/NM	Y (5)
Lube Oil System Coolers	30XJV10AC	31UBP01001	M	M	SI	S	C/NM	Y (5)
Lube Oil System Pumps	30XJV10AP	31UBP01001	M	M	SI	S	C/NM	Y (5)
Lube Oil System Filters	30XJV10AT	31UBP01001	M	M	SI	S	C/NM	Y (5)
Lube Oil System Tanks	30XJV10BB	31UBP01001	M	M	SI	S	C/NM	Y (5)
Lube Oil System Levels	30XJV10CL	31UBP01001	M	M	SI	S		Y (5)
Lube Oil System Pressures	30XJV10CP	31UBP01001	M	M	SI	S		Y (5)
Lube Oil System Temperatures	30XJV10CT	31UBP01001	M	M	SI	S		Y (5)
Lube Oil System Valves	30XJV20AA	32UBP01001	M	M	SI	S	C/NM	Y (5)
Lube Oil System Coolers	30XJV20AC	32UBP01001	M	M	SI	S	C/NM	Y (5)
Lube Oil System Pumps	30XJV20AP	32UBP01001	M	M	SI	S	C/NM	Y (5)
Lube Oil System Filters	30XJV20AT	32UBP01001	M	M	SI	S	C/NM	Y (5)
Lube Oil System Tanks	30XJV20BB	32UBP01001	M	M	SI	S	C/NM	Y (5)
Lube Oil System Levels	30XJV20CL	32UBP01001	M	M	SI	S		Y (5)
Lube Oil System Pressures	30XJV20CP	32UBP01001	M	M	SI	S		Y (5)

Table 3.10-1—List of Seismically and Dynamically Qualified Mechanical and Electrical Equipment (Sheet 142 of 197)

Name Tag (Equipment Description)	Tag Number	Local Area KKS ID (Room Location)	EQ Environment (Note 1)	Radiation Environment Zone (Note 2)	EQ Designated Function (Note 3)	Safety Class (Note 4)		EQ Program Designation (Note 5)
Lube Oil System Temperatures	30XJV20CT	32UBP01001	M	M	SI	S		Y (5)
Lube Oil System Valves	30XJV30AA	33UBP01001	M	M	SI	S	C/NM	Y (5)
Lube Oil System Coolers	30XJV30AC	33UBP01001	M	M	SI	S	C/NM	Y (5)
Lube Oil System Pumps	30XJV30AP	33UBP01001	M	M	SI	S	C/NM	Y (5)
Lube Oil System Filters	30XJV30AT	33UBP01001	M	M	SI	S	C/NM	Y (5)
Lube Oil System Tanks	30XJV30BB	33UBP01001	M	M	SI	S	C/NM	Y (5)
Lube Oil System Levels	30XJV30CL	33UBP01001	M	M	SI	S		Y (5)
Lube Oil System Pressures	30XJV30CP	33UBP01001	M	M	SI	S		Y (5)
Lube Oil System Temperatures	30XJV30CT	33UBP01001	M	M	SI	S		Y (5)
Lube Oil System Valves	30XJV40AA	34UBP01001	M	M	SI	S	C/NM	Y (5)
Lube Oil System Coolers	30XJV40AC	34UBP01001	M	M	SI	S	C/NM	Y (5)
Lube Oil System Pumps	30XJV40AP	34UBP01001	M	M	SI	S	C/NM	Y (5)
Lube Oil System Filters	30XJV40AT	34UBP01001	M	M	SI	S	C/NM	Y (5)
Lube Oil System Tanks	30XJV40BB	34UBP01001	M	M	SI	S	C/NM	Y (5)
Lube Oil System Levels	30XJV40CL	34UBP01001	M	M	SI	S		Y (5)
Lube Oil System Pressures	30XJV40CP	34UBP01001	M	M	SI	S		Y (5)
Lube Oil System Temperatures	30XJV40CT	34UBP01001	M	M	SI	S		Y (5)
Starting Air System Valves (from the receiver inlet check valve to the engine)	30XJX10AA	31UBP01001	M	M	SI	S	C/NM	Y (5)
Starting Air System Starting Devices	30XJX10AP	31UBP01001	M	M	SI	S	C/NM	Y (5)
Starting Air System Filters	30XJX10AT	31UBP01001	M	M	SI	S	C/NM	Y (5)
Starting Air System Tanks	30XJX10BB	31UBP01001	M	M	SI	S	C/NM	Y (5)
Air Start System Pressure	30XJX10CP	31UBP01001	M	M	SI	S		Y (5)
Starting Air System Valves (from the receiver inlet check valve to the engine)	30XJX20AA	32UBP01001	M	M	SI	S	C/NM	Y (5)
Starting Air System Starting Devices	30XJX20AP	32UBP01001	M	M	SI	S	C/NM	Y (5)
Starting Air System Filters	30XJX20AT	32UBP01001	M	M	SI	S	C/NM	Y (5)
Starting Air System Tanks	30XJX20BB	32UBP01001	M	M	SI	S	C/NM	Y (5)
Starting Air System Pressure	30XJX20CP	32UBP01001	M	M	SI	S		Y (5)
Starting Air System Valves (from the receiver inlet check valve to the engine)	30XJX30AA	33UBP01001	M	M	SI	S	C/NM	Y (5)
Starting Air System Starting Devices	30XJX30AP	33UBP01001	M	M	SI	S	C/NM	Y (5)
Starting Air System Filters	30XJX30AT	33UBP01001	M	M	SI	S	C/NM	Y (5)
Starting Air System Tanks	30XJX30BB	33UBP01001	M	M	SI	S	C/NM	Y (5)

Table 3.10-1—List of Seismically and Dynamically Qualified Mechanical and Electrical Equipment (Sheet 143 of 197)

Name Tag (Equipment Description)	Tag Number	Local Area KKS ID (Room Location)	EQ Environment (Note 1)	Radiation Environment Zone (Note 2)	EQ Designated Function (Note 3)	Safety Class (Note 4)	EQ Program Designation (Note 5)
Starting Air System Pressure	30XJX30CP	33UBP01001	M	M	SI	S	Y (5)
Starting Air System Valves (from the receiver inlet check valve to the engine)	30XJX40AA	34UBP01001	M	M	SI	S C/NM	Y (5)
Starting Air System Starting Devices	30XJX40AP	34UBP01001	M	M	SI	S C/NM	Y (5)
Starting Air System Filters	30XJX40AT	34UBP01001	M	M	SI	S C/NM	Y (5)
Starting Air System Tanks	30XJX40BB	34UBP01001	M	M	SI	S C/NM	Y (5)
Starting Air System Pressure	30XJX40CP	34UBP01001	M	M	SI	S	Y (5)
AC Synchronous Generator Mech.	30XKA10AG	31UBP01001	M	M	SI	S C/NM	Y (5)
AC Synchronous Generator Mech.	30XKA20AG	32UBP01001	M	M	SI	S C/NM	Y (5)
AC Synchronous Generator Mech.	30XKA30AG	33UBP01001	M	M	SI	S C/NM	Y (5)
AC Synchronous Generator Mech.	30XKA40AG	34UBP01001	M	M	SI	S C/NM	Y (5)
Combustible Gas Control System (CGCS)							
H2 Mixing Damper 01	30JMT20AA001	30UJA07015	H	H	ES SI	S C/NM	Y (4) Y (5)
H2 Mixing Damper 02	30JMT20AA002	30UJA07015	H	H	ES SI	S C/NM	Y (4) Y (5)
H2 Mixing Damper 03	30JMT20AA003	30UJA07015	H	H	ES SI	S C/NM	Y (4) Y (5)
H2 Mixing Damper 04	30JMT20AA004	30UJA07015	H	H	ES SI	S C/NM	Y (4) Y (5)
H2 Mixing Damper 05	30JMT20AA005	30UJA07014	H	H	ES SI	S C/NM	Y (4) Y (5)
H2 Mixing Damper 06	30JMT20AA006	30UJA07014	H	H	ES SI	S C/NM	Y (4) Y (5)
H2 Mixing Damper 07	30JMT20AA007	30UJA07014	H	H	ES SI	S C/NM	Y (4) Y (5)
H2 Mixing Damper 08	30JMT20AA008	30UJA07014	H	H	ES SI	S C/NM	Y (4) Y (5)
H2 Mixing Damper 01 – Open (M)	30JMT20CG001A	30UJA07015	H	H	ES SI	S C/NM	Y (4) Y (5)
H2 Mixing Damper 01 – Closed (M)	30JMT20CG001B	30UJA07015	H	H	ES SI	S C/NM	Y (4) Y (5)
H2 Mixing Damper 02 – Open (M)	30JMT20CG002A	30UJA07015	H	H	ES SI	S C/NM	Y (4) Y (5)
H2 Mixing Damper 02 – Closed (M)	30JMT20CG002B	30UJA07015	H	H	ES SI	S C/NM	Y (4) Y (5)
H2 Mixing Damper 03 – Open (M)	30JMT20CG003A	30UJA07015	H	H	ES SI	S C/NM	Y (4) Y (5)
H2 Mixing Damper 03 – Closed (M)	30JMT20CG003B	30UJA07015	H	H	ES SI	S C/NM	Y (4) Y (5)
H2 Mixing Damper 04 – Open (M)	30JMT20CG004A	30UJA07015	H	H	ES SI	S C/NM	Y (4) Y (5)
H2 Mixing Damper 04 – Closed (M)	30JMT20CG004B	30UJA07015	H	H	ES SI	S C/NM	Y (4) Y (5)
H2 Mixing Damper 05 – Open (M)	30JMT20CG005A	30UJA07014	H	H	ES SI	S C/NM	Y (4) Y (5)
H2 Mixing Damper 05 – Closed (M)	30JMT20CG005B	30UJA07014	H	H	ES SI	S C/NM	Y (4) Y (5)
H2 Mixing Damper 06 – Open (M)	30JMT20CG006A	30UJA07014	H	H	ES SI	S C/NM	Y (4) Y (5)
H2 Mixing Damper 06 – Closed (M)	30JMT20CG006B	30UJA07014	H	H	ES SI	S C/NM	Y (4) Y (5)
H2 Mixing Damper 07 – Open (M)	30JMT20CG007A	30UJA07014	H	H	ES SI	S C/NM	Y (4) Y (5)

Table 3.10-1—List of Seismically and Dynamically Qualified Mechanical and Electrical Equipment (Sheet 144 of 197)

Name Tag (Equipment Description)	Tag Number	Local Area KKS ID (Room Location)	EQ Environment (Note 1)	Radiation Environment Zone (Note 2)	EQ Designated Function (Note 3)		Safety Class (Note 4)		EQ Program Designation (Note 5)	
H2 Mixing Damper 07 – Closed (M)	30JMT20CG007B	30UJA07014	H	H	ES	SI	S	C/NM	Y (4)	Y (5)
H2 Mixing Damper 08 – Open (M)	30JMT20CG008A	30UJA07014	H	H	ES	SI	S	C/NM	Y (4)	Y (5)
H2 Mixing Damper 08 – Closed (M)	30JMT20CG008B	30UJA07014	H	H	ES	SI	S	C/NM	Y (4)	Y (5)
Rupture Foil – SG Loop 1	30JMT20AB101	30UJA34003	H	H	ES	SI	S	C/NM	Y (4)	Y (5)
Rupture Foil – SG Loop 1	30JMT20AB102	30UJA34003	H	H	ES	SI	S	C/NM	Y (4)	Y (5)
Rupture Foil – SG Loop 1	30JMT20AB103	30UJA34003	H	H	ES	SI	S	C/NM	Y (4)	Y (5)
Rupture Foil – SG Loop 1	30JMT20AB104	30UJA34003	H	H	ES	SI	S	C/NM	Y (4)	Y (5)
Rupture Foil – SG Loop 1	30JMT20AB105	30UJA34003	H	H	ES	SI	S	C/NM	Y (4)	Y (5)
Rupture Foil – SG Loop 1	30JMT20AB106	30UJA34003	H	H	ES	SI	S	C/NM	Y (4)	Y (5)
Rupture Foil – SG Loop 1	30JMT20AB107	30UJA34003	H	H	ES	SI	S	C/NM	Y (4)	Y (5)
Rupture Foil – SG Loop 1	30JMT20AB108	30UJA34003	H	H	ES	SI	S	C/NM	Y (4)	Y (5)
Rupture Foil – SG Loop 1	30JMT20AB109	30UJA34003	H	H	ES	SI	S	C/NM	Y (4)	Y (5)
Rupture Foil – SG Loop 1	30JMT20AB110	30UJA34003	H	H	ES	SI	S	C/NM	Y (4)	Y (5)
Rupture Foil – SG Loop 1	30JMT20AB111	30UJA34003	H	H	ES	SI	S	C/NM	Y (4)	Y (5)
Rupture Foil – SG Loop 1	30JMT20AB112	30UJA34003	H	H	ES	SI	S	C/NM	Y (4)	Y (5)
Rupture Foil – SG Loop 1	30JMT20AB113	30UJA34003	H	H	ES	SI	S	C/NM	Y (4)	Y (5)
Rupture Foil – SG Loop 1	30JMT20AB114	30UJA34003	H	H	ES	SI	S	C/NM	Y (4)	Y (5)
Rupture Foil – SG Loop 1	30JMT20AB115	30UJA34003	H	H	ES	SI	S	C/NM	Y (4)	Y (5)
Rupture Foil – SG Loop 1	30JMT20AB116	30UJA34003	H	H	ES	SI	S	C/NM	Y (4)	Y (5)
Rupture Foil – SG Loop 1	30JMT20AB117	30UJA34003	H	H	ES	SI	S	C/NM	Y (4)	Y (5)
Rupture Foil – SG Loop 1	30JMT20AB118	30UJA34003	H	H	ES	SI	S	C/NM	Y (4)	Y (5)
Rupture Foil – SG Loop 1	30JMT20AB119	30UJA34003	H	H	ES	SI	S	C/NM	Y (4)	Y (5)
Rupture Foil – SG Loop 1	30JMT20AB120	30UJA34003	H	H	ES	SI	S	C/NM	Y (4)	Y (5)
Rupture Foil – SG Loop 1	30JMT20AB121	30UJA34003	H	H	ES	SI	S	C/NM	Y (4)	Y (5)
Rupture Foil – SG Loop 1	30JMT20AB122	30UJA34003	H	H	ES	SI	S	C/NM	Y (4)	Y (5)
Rupture Foil – SG Loop 1	30JMT20AB123	30UJA34003	H	H	ES	SI	S	C/NM	Y (4)	Y (5)
Rupture Foil – SG Loop 1	30JMT20AB124	30UJA34003	H	H	ES	SI	S	C/NM	Y (4)	Y (5)
Rupture Foil – SG Loop 1	30JMT20AB125	30UJA34003	H	H	ES	SI	S	C/NM	Y (4)	Y (5)
Rupture Foil – SG Loop 1	30JMT20AB126	30UJA34003	H	H	ES	SI	S	C/NM	Y (4)	Y (5)
Rupture Foil – SG Loop 1	30JMT20AB127	30UJA34003	H	H	ES	SI	S	C/NM	Y (4)	Y (5)
Rupture Foil – SG Loop 1	30JMT20AB128	30UJA34003	H	H	ES	SI	S	C/NM	Y (4)	Y (5)
Convection Foil – SG Loop 1	30JMT20AB151	30UJA34003	H	H	ES	SI	S	C/NM	Y (4)	Y (5)
Convection Foil – SG Loop 1	30JMT20AB152	30UJA34003	H	H	ES	SI	S	C/NM	Y (4)	Y (5)

Table 3.10-1—List of Seismically and Dynamically Qualified Mechanical and Electrical Equipment (Sheet 145 of 197)

Name Tag (Equipment Description)	Tag Number	Local Area KKS ID (Room Location)	EQ Environment (Note 1)	Radiation Environment Zone (Note 2)	EQ Designated Function (Note 3)		Safety Class (Note 4)		EQ Program Designation (Note 5)	
Convection Foil – SG Loop 1	30JMT20AB153	30UJA34003	H	H	ES	SI	S	C/NM	Y (4)	Y (5)
Convection Foil – SG Loop 1	30JMT20AB154	30UJA34003	H	H	ES	SI	S	C/NM	Y (4)	Y (5)
Convection Foil – SG Loop 1	30JMT20AB155	30UJA34003	H	H	ES	SI	S	C/NM	Y (4)	Y (5)
Convection Foil – SG Loop 1	30JMT20AB156	30UJA34003	H	H	ES	SI	S	C/NM	Y (4)	Y (5)
Convection Foil – SG Loop 1	30JMT20AB157	30UJA34003	H	H	ES	SI	S	C/NM	Y (4)	Y (5)
Convection Foil – SG Loop 1	30JMT20AB158	30UJA34003	H	H	ES	SI	S	C/NM	Y (4)	Y (5)
Convection Foil – SG Loop 1	30JMT20AB159	30UJA34003	H	H	ES	SI	S	C/NM	Y (4)	Y (5)
Convection Foil – SG Loop 1	30JMT20AB160	30UJA34003	H	H	ES	SI	S	C/NM	Y (4)	Y (5)
Convection Foil – SG Loop 1	30JMT20AB161	30UJA34003	H	H	ES	SI	S	C/NM	Y (4)	Y (5)
Convection Foil – SG Loop 1	30JMT20AB162	30UJA34003	H	H	ES	SI	S	C/NM	Y (4)	Y (5)
Convection Foil – SG Loop 1	30JMT20AB163	30UJA34003	H	H	ES	SI	S	C/NM	Y (4)	Y (5)
Convection Foil – SG Loop 1	30JMT20AB164	30UJA34003	H	H	ES	SI	S	C/NM	Y (4)	Y (5)
Convection Foil – SG Loop 1	30JMT20AB165	30UJA34003	H	H	ES	SI	S	C/NM	Y (4)	Y (5)
Convection Foil – SG Loop 1	30JMT20AB166	30UJA34003	H	H	ES	SI	S	C/NM	Y (4)	Y (5)
Convection Foil – SG Loop 1	30JMT20AB167	30UJA34003	H	H	ES	SI	S	C/NM	Y (4)	Y (5)
Convection Foil – SG Loop 1	30JMT20AB168	30UJA34003	H	H	ES	SI	S	C/NM	Y (4)	Y (5)
Convection Foil – SG Loop 1	30JMT20AB169	30UJA34003	H	H	ES	SI	S	C/NM	Y (4)	Y (5)
Convection Foil – SG Loop 1	30JMT20AB170	30UJA34003	H	H	ES	SI	S	C/NM	Y (4)	Y (5)
Convection Foil – SG Loop 1	30JMT20AB171	30UJA34003	H	H	ES	SI	S	C/NM	Y (4)	Y (5)
Convection Foil – SG Loop 1	30JMT20AB172	30UJA34003	H	H	ES	SI	S	C/NM	Y (4)	Y (5)
Convection Foil – SG Loop 1	30JMT20AB173	30UJA34003	H	H	ES	SI	S	C/NM	Y (4)	Y (5)
Convection Foil – SG Loop 1	30JMT20AB174	30UJA34003	H	H	ES	SI	S	C/NM	Y (4)	Y (5)
Convection Foil – SG Loop 1	30JMT20AB175	30UJA34003	H	H	ES	SI	S	C/NM	Y (4)	Y (5)
Convection Foil – SG Loop 1	30JMT20AB176	30UJA34003	H	H	ES	SI	S	C/NM	Y (4)	Y (5)
Convection Foil – SG Loop 1	30JMT20AB177	30UJA34003	H	H	ES	SI	S	C/NM	Y (4)	Y (5)
Convection Foil – SG Loop 1	30JMT20AB178	30UJA34003	H	H	ES	SI	S	C/NM	Y (4)	Y (5)
Convection Foil – SG Loop 1	30JMT20AB179	30UJA34003	H	H	ES	SI	S	C/NM	Y (4)	Y (5)
Convection Foil – SG Loop 1	30JMT20AB180	30UJA34003	H	H	ES	SI	S	C/NM	Y (4)	Y (5)
Rupture Foil – SG Loop 2	30JMT20AB201	30UJA34004	H	H	ES	SI	S	C/NM	Y (4)	Y (5)
Rupture Foil – SG Loop 2	30JMT20AB202	30UJA34004	H	H	ES	SI	S	C/NM	Y (4)	Y (5)
Rupture Foil – SG Loop 2	30JMT20AB203	30UJA34004	H	H	ES	SI	S	C/NM	Y (4)	Y (5)
Rupture Foil – SG Loop 2	30JMT20AB204	30UJA34004	H	H	ES	SI	S	C/NM	Y (4)	Y (5)
Rupture Foil – SG Loop 2	30JMT20AB205	30UJA34004	H	H	ES	SI	S	C/NM	Y (4)	Y (5)

Table 3.10-1—List of Seismically and Dynamically Qualified Mechanical and Electrical Equipment (Sheet 146 of 197)

Name Tag (Equipment Description)	Tag Number	Local Area KKS ID (Room Location)	EQ Environment (Note 1)	Radiation Environment Zone (Note 2)	EQ Designated Function (Note 3)		Safety Class (Note 4)		EQ Program Designation (Note 5)	
Rupture Foil – SG Loop 2	30JMT20AB206	30UJA34004	H	H	ES	SI	S	C/NM	Y (4)	Y (5)
Rupture Foil – SG Loop 2	30JMT20AB207	30UJA34004	H	H	ES	SI	S	C/NM	Y (4)	Y (5)
Rupture Foil – SG Loop 2	30JMT20AB208	30UJA34004	H	H	ES	SI	S	C/NM	Y (4)	Y (5)
Rupture Foil – SG Loop 2	30JMT20AB209	30UJA34004	H	H	ES	SI	S	C/NM	Y (4)	Y (5)
Rupture Foil – SG Loop 2	30JMT20AB210	30UJA34004	H	H	ES	SI	S	C/NM	Y (4)	Y (5)
Rupture Foil – SG Loop 2	30JMT20AB211	30UJA34004	H	H	ES	SI	S	C/NM	Y (4)	Y (5)
Rupture Foil – SG Loop 2	30JMT20AB212	30UJA34004	H	H	ES	SI	S	C/NM	Y (4)	Y (5)
Rupture Foil – SG Loop 2	30JMT20AB213	30UJA34004	H	H	ES	SI	S	C/NM	Y (4)	Y (5)
Rupture Foil – SG Loop 2	30JMT20AB214	30UJA34004	H	H	ES	SI	S	C/NM	Y (4)	Y (5)
Rupture Foil – SG Loop 2	30JMT20AB215	30UJA34004	H	H	ES	SI	S	C/NM	Y (4)	Y (5)
Rupture Foil – SG Loop 2	30JMT20AB216	30UJA34004	H	H	ES	SI	S	C/NM	Y (4)	Y (5)
Rupture Foil – SG Loop 2	30JMT20AB217	30UJA34004	H	H	ES	SI	S	C/NM	Y (4)	Y (5)
Rupture Foil – SG Loop 2	30JMT20AB218	30UJA34004	H	H	ES	SI	S	C/NM	Y (4)	Y (5)
Rupture Foil – SG Loop 2	30JMT20AB219	30UJA34004	H	H	ES	SI	S	C/NM	Y (4)	Y (5)
Rupture Foil – SG Loop 2	30JMT20AB220	30UJA34004	H	H	ES	SI	S	C/NM	Y (4)	Y (5)
Rupture Foil – SG Loop 2	30JMT20AB221	30UJA34004	H	H	ES	SI	S	C/NM	Y (4)	Y (5)
Rupture Foil – SG Loop 2	30JMT20AB222	30UJA34004	H	H	ES	SI	S	C/NM	Y (4)	Y (5)
Rupture Foil – SG Loop 2	30JMT20AB223	30UJA34004	H	H	ES	SI	S	C/NM	Y (4)	Y (5)
Rupture Foil – SG Loop 2	30JMT20AB224	30UJA34004	H	H	ES	SI	S	C/NM	Y (4)	Y (5)
Rupture Foil – SG Loop 2	30JMT20AB225	30UJA34004	H	H	ES	SI	S	C/NM	Y (4)	Y (5)
Rupture Foil – SG Loop 2	30JMT20AB226	30UJA34004	H	H	ES	SI	S	C/NM	Y (4)	Y (5)
Rupture Foil – SG Loop 2	30JMT20AB227	30UJA34004	H	H	ES	SI	S	C/NM	Y (4)	Y (5)
Rupture Foil – SG Loop 2	30JMT20AB228	30UJA34004	H	H	ES	SI	S	C/NM	Y (4)	Y (5)
Convection Foil – SG Loop 2	30JMT20AB251	30UJA34004	H	H	ES	SI	S	C/NM	Y (4)	Y (5)
Convection Foil – SG Loop 2	30JMT20AB252	30UJA34004	H	H	ES	SI	S	C/NM	Y (4)	Y (5)
Convection Foil – SG Loop 2	30JMT20AB253	30UJA34004	H	H	ES	SI	S	C/NM	Y (4)	Y (5)
Convection Foil – SG Loop 2	30JMT20AB254	30UJA34004	H	H	ES	SI	S	C/NM	Y (4)	Y (5)
Convection Foil – SG Loop 2	30JMT20AB255	30UJA34004	H	H	ES	SI	S	C/NM	Y (4)	Y (5)
Convection Foil – SG Loop 2	30JMT20AB256	30UJA34004	H	H	ES	SI	S	C/NM	Y (4)	Y (5)
Convection Foil – SG Loop 2	30JMT20AB257	30UJA34004	H	H	ES	SI	S	C/NM	Y (4)	Y (5)
Convection Foil – SG Loop 2	30JMT20AB258	30UJA34004	H	H	ES	SI	S	C/NM	Y (4)	Y (5)
Convection Foil – SG Loop 2	30JMT20AB259	30UJA34004	H	H	ES	SI	S	C/NM	Y (4)	Y (5)
Convection Foil – SG Loop 2	30JMT20AB260	30UJA34004	H	H	ES	SI	S	C/NM	Y (4)	Y (5)

Table 3.10-1—List of Seismically and Dynamically Qualified Mechanical and Electrical Equipment (Sheet 147 of 197)

Name Tag (Equipment Description)	Tag Number	Local Area KKS ID (Room Location)	EQ Environment (Note 1)	Radiation Environment Zone (Note 2)	EQ Designated Function (Note 3)		Safety Class (Note 4)		EQ Program Designation (Note 5)	
Convection Foil – SG Loop 2	30JMT20AB261	30UJA34004	H	H	ES	SI	S	C/NM	Y (4)	Y (5)
Convection Foil – SG Loop 2	30JMT20AB262	30UJA34004	H	H	ES	SI	S	C/NM	Y (4)	Y (5)
Convection Foil – SG Loop 2	30JMT20AB263	30UJA34004	H	H	ES	SI	S	C/NM	Y (4)	Y (5)
Convection Foil – SG Loop 2	30JMT20AB264	30UJA34004	H	H	ES	SI	S	C/NM	Y (4)	Y (5)
Convection Foil – SG Loop 2	30JMT20AB265	30UJA34004	H	H	ES	SI	S	C/NM	Y (4)	Y (5)
Convection Foil – SG Loop 2	30JMT20AB266	30UJA34004	H	H	ES	SI	S	C/NM	Y (4)	Y (5)
Convection Foil – SG Loop 2	30JMT20AB267	30UJA34004	H	H	ES	SI	S	C/NM	Y (4)	Y (5)
Convection Foil – SG Loop 2	30JMT20AB268	30UJA34004	H	H	ES	SI	S	C/NM	Y (4)	Y (5)
Convection Foil – SG Loop 2	30JMT20AB269	30UJA34004	H	H	ES	SI	S	C/NM	Y (4)	Y (5)
Convection Foil – SG Loop 2	30JMT20AB270	30UJA34004	H	H	ES	SI	S	C/NM	Y (4)	Y (5)
Convection Foil – SG Loop 2	30JMT20AB271	30UJA34004	H	H	ES	SI	S	C/NM	Y (4)	Y (5)
Convection Foil – SG Loop 2	30JMT20AB272	30UJA34004	H	H	ES	SI	S	C/NM	Y (4)	Y (5)
Convection Foil – SG Loop 2	30JMT20AB273	30UJA34004	H	H	ES	SI	S	C/NM	Y (4)	Y (5)
Convection Foil – SG Loop 2	30JMT20AB274	30UJA34004	H	H	ES	SI	S	C/NM	Y (4)	Y (5)
Convection Foil – SG Loop 2	30JMT20AB275	30UJA34004	H	H	ES	SI	S	C/NM	Y (4)	Y (5)
Convection Foil – SG Loop 2	30JMT20AB276	30UJA34004	H	H	ES	SI	S	C/NM	Y (4)	Y (5)
Convection Foil – SG Loop 2	30JMT20AB277	30UJA34004	H	H	ES	SI	S	C/NM	Y (4)	Y (5)
Convection Foil – SG Loop 2	30JMT20AB278	30UJA34004	H	H	ES	SI	S	C/NM	Y (4)	Y (5)
Convection Foil – SG Loop 2	30JMT20AB279	30UJA34004	H	H	ES	SI	S	C/NM	Y (4)	Y (5)
Convection Foil – SG Loop 2	30JMT20AB280	30UJA34004	H	H	ES	SI	S	C/NM	Y (4)	Y (5)
Rupture Foil – SG Loop 3	30JMT20AB301	30UJA34007	H	H	ES	SI	S	C/NM	Y (4)	Y (5)
Rupture Foil – SG Loop 3	30JMT20AB302	30UJA34007	H	H	ES	SI	S	C/NM	Y (4)	Y (5)
Rupture Foil – SG Loop 3	30JMT20AB303	30UJA34007	H	H	ES	SI	S	C/NM	Y (4)	Y (5)
Rupture Foil – SG Loop 3	30JMT20AB304	30UJA34007	H	H	ES	SI	S	C/NM	Y (4)	Y (5)
Rupture Foil – SG Loop 3	30JMT20AB305	30UJA34007	H	H	ES	SI	S	C/NM	Y (4)	Y (5)
Rupture Foil – SG Loop 3	30JMT20AB306	30UJA34007	H	H	ES	SI	S	C/NM	Y (4)	Y (5)
Rupture Foil – SG Loop 3	30JMT20AB307	30UJA34007	H	H	ES	SI	S	C/NM	Y (4)	Y (5)
Rupture Foil – SG Loop 3	30JMT20AB308	30UJA34007	H	H	ES	SI	S	C/NM	Y (4)	Y (5)
Rupture Foil – SG Loop 3	30JMT20AB309	30UJA34007	H	H	ES	SI	S	C/NM	Y (4)	Y (5)
Rupture Foil – SG Loop 3	30JMT20AB310	30UJA34007	H	H	ES	SI	S	C/NM	Y (4)	Y (5)
Rupture Foil – SG Loop 3	30JMT20AB311	30UJA34007	H	H	ES	SI	S	C/NM	Y (4)	Y (5)
Rupture Foil – SG Loop 3	30JMT20AB312	30UJA34007	H	H	ES	SI	S	C/NM	Y (4)	Y (5)
Rupture Foil – SG Loop 3	30JMT20AB313	30UJA34007	H	H	ES	SI	S	C/NM	Y (4)	Y (5)

Table 3.10-1—List of Seismically and Dynamically Qualified Mechanical and Electrical Equipment (Sheet 148 of 197)

Name Tag (Equipment Description)	Tag Number	Local Area KKS ID (Room Location)	EQ Environment (Note 1)	Radiation Environment Zone (Note 2)	EQ Designated Function (Note 3)		Safety Class (Note 4)		EQ Program Designation (Note 5)	
Rupture Foil – SG Loop 3	30JMT20AB314	30UJA34007	H	H	ES	SI	S	C/NM	Y (4)	Y (5)
Rupture Foil – SG Loop 3	30JMT20AB315	30UJA34007	H	H	ES	SI	S	C/NM	Y (4)	Y (5)
Rupture Foil – SG Loop 3	30JMT20AB316	30UJA34007	H	H	ES	SI	S	C/NM	Y (4)	Y (5)
Rupture Foil – SG Loop 3	30JMT20AB317	30UJA34007	H	H	ES	SI	S	C/NM	Y (4)	Y (5)
Rupture Foil – SG Loop 3	30JMT20AB318	30UJA34007	H	H	ES	SI	S	C/NM	Y (4)	Y (5)
Rupture Foil – SG Loop 3	30JMT20AB319	30UJA34007	H	H	ES	SI	S	C/NM	Y (4)	Y (5)
Rupture Foil – SG Loop 3	30JMT20AB320	30UJA34007	H	H	ES	SI	S	C/NM	Y (4)	Y (5)
Rupture Foil – SG Loop 3	30JMT20AB321	30UJA34007	H	H	ES	SI	S	C/NM	Y (4)	Y (5)
Rupture Foil – SG Loop 3	30JMT20AB322	30UJA34007	H	H	ES	SI	S	C/NM	Y (4)	Y (5)
Rupture Foil – SG Loop 3	30JMT20AB323	30UJA34007	H	H	ES	SI	S	C/NM	Y (4)	Y (5)
Rupture Foil – SG Loop 3	30JMT20AB324	30UJA34007	H	H	ES	SI	S	C/NM	Y (4)	Y (5)
Rupture Foil – SG Loop 3	30JMT20AB325	30UJA34007	H	H	ES	SI	S	C/NM	Y (4)	Y (5)
Rupture Foil – SG Loop 3	30JMT20AB326	30UJA34007	H	H	ES	SI	S	C/NM	Y (4)	Y (5)
Rupture Foil – SG Loop 3	30JMT20AB327	30UJA34007	H	H	ES	SI	S	C/NM	Y (4)	Y (5)
Rupture Foil – SG Loop 3	30JMT20AB328	30UJA34007	H	H	ES	SI	S	C/NM	Y (4)	Y (5)
Convection Foil – SG Loop 3	30JMT20AB351	30UJA34007	H	H	ES	SI	S	C/NM	Y (4)	Y (5)
Convection Foil – SG Loop 3	30JMT20AB352	30UJA34007	H	H	ES	SI	S	C/NM	Y (4)	Y (5)
Convection Foil – SG Loop 3	30JMT20AB353	30UJA34007	H	H	ES	SI	S	C/NM	Y (4)	Y (5)
Convection Foil – SG Loop 3	30JMT20AB354	30UJA34007	H	H	ES	SI	S	C/NM	Y (4)	Y (5)
Convection Foil – SG Loop 3	30JMT20AB355	30UJA34007	H	H	ES	SI	S	C/NM	Y (4)	Y (5)
Convection Foil – SG Loop 3	30JMT20AB356	30UJA34007	H	H	ES	SI	S	C/NM	Y (4)	Y (5)
Convection Foil – SG Loop 3	30JMT20AB357	30UJA34007	H	H	ES	SI	S	C/NM	Y (4)	Y (5)
Convection Foil – SG Loop 3	30JMT20AB358	30UJA34007	H	H	ES	SI	S	C/NM	Y (4)	Y (5)
Convection Foil – SG Loop 3	30JMT20AB359	30UJA34007	H	H	ES	SI	S	C/NM	Y (4)	Y (5)
Convection Foil – SG Loop 3	30JMT20AB360	30UJA34007	H	H	ES	SI	S	C/NM	Y (4)	Y (5)
Convection Foil – SG Loop 3	30JMT20AB361	30UJA34007	H	H	ES	SI	S	C/NM	Y (4)	Y (5)
Convection Foil – SG Loop 3	30JMT20AB362	30UJA34007	H	H	ES	SI	S	C/NM	Y (4)	Y (5)
Convection Foil – SG Loop 3	30JMT20AB363	30UJA34007	H	H	ES	SI	S	C/NM	Y (4)	Y (5)
Convection Foil – SG Loop 3	30JMT20AB364	30UJA34007	H	H	ES	SI	S	C/NM	Y (4)	Y (5)
Convection Foil – SG Loop 3	30JMT20AB365	30UJA34007	H	H	ES	SI	S	C/NM	Y (4)	Y (5)
Convection Foil – SG Loop 3	30JMT20AB366	30UJA34007	H	H	ES	SI	S	C/NM	Y (4)	Y (5)
Convection Foil – SG Loop 3	30JMT20AB367	30UJA34007	H	H	ES	SI	S	C/NM	Y (4)	Y (5)
Convection Foil – SG Loop 3	30JMT20AB368	30UJA34007	H	H	ES	SI	S	C/NM	Y (4)	Y (5)

Table 3.10-1—List of Seismically and Dynamically Qualified Mechanical and Electrical Equipment (Sheet 149 of 197)

Name Tag (Equipment Description)	Tag Number	Local Area KKS ID (Room Location)	EQ Environment (Note 1)	Radiation Environment Zone (Note 2)	EQ Designated Function (Note 3)		Safety Class (Note 4)		EQ Program Designation (Note 5)	
Convection Foil – SG Loop 3	30JMT20AB369	30UJA34007	H	H	ES	SI	S	C/NM	Y (4)	Y (5)
Convection Foil – SG Loop 3	30JMT20AB370	30UJA34007	H	H	ES	SI	S	C/NM	Y (4)	Y (5)
Convection Foil – SG Loop 3	30JMT20AB371	30UJA34007	H	H	ES	SI	S	C/NM	Y (4)	Y (5)
Convection Foil – SG Loop 3	30JMT20AB372	30UJA34007	H	H	ES	SI	S	C/NM	Y (4)	Y (5)
Convection Foil – SG Loop 3	30JMT20AB373	30UJA34007	H	H	ES	SI	S	C/NM	Y (4)	Y (5)
Convection Foil – SG Loop 3	30JMT20AB374	30UJA34007	H	H	ES	SI	S	C/NM	Y (4)	Y (5)
Convection Foil – SG Loop 3	30JMT20AB375	30UJA34007	H	H	ES	SI	S	C/NM	Y (4)	Y (5)
Convection Foil – SG Loop 3	30JMT20AB376	30UJA34007	H	H	ES	SI	S	C/NM	Y (4)	Y (5)
Convection Foil – SG Loop 3	30JMT20AB377	30UJA34007	H	H	ES	SI	S	C/NM	Y (4)	Y (5)
Convection Foil – SG Loop 3	30JMT20AB378	30UJA34007	H	H	ES	SI	S	C/NM	Y (4)	Y (5)
Convection Foil – SG Loop 3	30JMT20AB379	30UJA34007	H	H	ES	SI	S	C/NM	Y (4)	Y (5)
Convection Foil – SG Loop 3	30JMT20AB380	30UJA34007	H	H	ES	SI	S	C/NM	Y (4)	Y (5)
Rupture Foil – SG Loop 4	30JMT20AB401	30UJA34008	H	H	ES	SI	S	C/NM	Y (4)	Y (5)
Rupture Foil – SG Loop 4	30JMT20AB402	30UJA34008	H	H	ES	SI	S	C/NM	Y (4)	Y (5)
Rupture Foil – SG Loop 4	30JMT20AB403	30UJA34008	H	H	ES	SI	S	C/NM	Y (4)	Y (5)
Rupture Foil – SG Loop 4	30JMT20AB404	30UJA34008	H	H	ES	SI	S	C/NM	Y (4)	Y (5)
Rupture Foil – SG Loop 4	30JMT20AB405	30UJA34008	H	H	ES	SI	S	C/NM	Y (4)	Y (5)
Rupture Foil – SG Loop 4	30JMT20AB406	30UJA34008	H	H	ES	SI	S	C/NM	Y (4)	Y (5)
Rupture Foil – SG Loop 4	30JMT20AB407	30UJA34008	H	H	ES	SI	S	C/NM	Y (4)	Y (5)
Rupture Foil – SG Loop 4	30JMT20AB408	30UJA34008	H	H	ES	SI	S	C/NM	Y (4)	Y (5)
Rupture Foil – SG Loop 4	30JMT20AB409	30UJA34008	H	H	ES	SI	S	C/NM	Y (4)	Y (5)
Rupture Foil – SG Loop 4	30JMT20AB410	30UJA34008	H	H	ES	SI	S	C/NM	Y (4)	Y (5)
Rupture Foil – SG Loop 4	30JMT20AB411	30UJA34008	H	H	ES	SI	S	C/NM	Y (4)	Y (5)
Rupture Foil – SG Loop 4	30JMT20AB412	30UJA34008	H	H	ES	SI	S	C/NM	Y (4)	Y (5)
Rupture Foil – SG Loop 4	30JMT20AB413	30UJA34008	H	H	ES	SI	S	C/NM	Y (4)	Y (5)
Rupture Foil – SG Loop 4	30JMT20AB414	30UJA34008	H	H	ES	SI	S	C/NM	Y (4)	Y (5)
Rupture Foil – SG Loop 4	30JMT20AB415	30UJA34008	H	H	ES	SI	S	C/NM	Y (4)	Y (5)
Rupture Foil – SG Loop 4	30JMT20AB416	30UJA34008	H	H	ES	SI	S	C/NM	Y (4)	Y (5)
Rupture Foil – SG Loop 4	30JMT20AB417	30UJA34008	H	H	ES	SI	S	C/NM	Y (4)	Y (5)
Rupture Foil – SG Loop 4	30JMT20AB418	30UJA34008	H	H	ES	SI	S	C/NM	Y (4)	Y (5)
Rupture Foil – SG Loop 4	30JMT20AB419	30UJA34008	H	H	ES	SI	S	C/NM	Y (4)	Y (5)
Rupture Foil – SG Loop 4	30JMT20AB420	30UJA34008	H	H	ES	SI	S	C/NM	Y (4)	Y (5)
Rupture Foil – SG Loop 4	30JMT20AB421	30UJA34008	H	H	ES	SI	S	C/NM	Y (4)	Y (5)

Table 3.10-1—List of Seismically and Dynamically Qualified Mechanical and Electrical Equipment (Sheet 150 of 197)

Name Tag (Equipment Description)	Tag Number	Local Area KKS ID (Room Location)	EQ Environment (Note 1)	Radiation Environment Zone (Note 2)	EQ Designated Function (Note 3)		Safety Class (Note 4)		EQ Program Designation (Note 5)	
Rupture Foil – SG Loop 4	30JMT20AB422	30UJA34008	H	H	ES	SI	S	C/NM	Y (4)	Y (5)
Rupture Foil – SG Loop 4	30JMT20AB423	30UJA34008	H	H	ES	SI	S	C/NM	Y (4)	Y (5)
Rupture Foil – SG Loop 4	30JMT20AB424	30UJA34008	H	H	ES	SI	S	C/NM	Y (4)	Y (5)
Rupture Foil – SG Loop 4	30JMT20AB425	30UJA34008	H	H	ES	SI	S	C/NM	Y (4)	Y (5)
Rupture Foil – SG Loop 4	30JMT20AB426	30UJA34008	H	H	ES	SI	S	C/NM	Y (4)	Y (5)
Rupture Foil – SG Loop 4	30JMT20AB427	30UJA34008	H	H	ES	SI	S	C/NM	Y (4)	Y (5)
Rupture Foil – SG Loop 4	30JMT20AB428	30UJA34008	H	H	ES	SI	S	C/NM	Y (4)	Y (5)
Convection Foil – SG Loop 4	30JMT20AB451	30UJA34008	H	H	ES	SI	S	C/NM	Y (4)	Y (5)
Convection Foil – SG Loop 4	30JMT20AB452	30UJA34008	H	H	ES	SI	S	C/NM	Y (4)	Y (5)
Convection Foil – SG Loop 4	30JMT20AB453	30UJA34008	H	H	ES	SI	S	C/NM	Y (4)	Y (5)
Convection Foil – SG Loop 4	30JMT20AB454	30UJA34008	H	H	ES	SI	S	C/NM	Y (4)	Y (5)
Convection Foil – SG Loop 4	30JMT20AB455	30UJA34008	H	H	ES	SI	S	C/NM	Y (4)	Y (5)
Convection Foil – SG Loop 4	30JMT20AB456	30UJA34008	H	H	ES	SI	S	C/NM	Y (4)	Y (5)
Convection Foil – SG Loop 4	30JMT20AB457	30UJA34008	H	H	ES	SI	S	C/NM	Y (4)	Y (5)
Convection Foil – SG Loop 4	30JMT20AB458	30UJA34008	H	H	ES	SI	S	C/NM	Y (4)	Y (5)
Convection Foil – SG Loop 4	30JMT20AB459	30UJA34008	H	H	ES	SI	S	C/NM	Y (4)	Y (5)
Convection Foil – SG Loop 4	30JMT20AB460	30UJA34008	H	H	ES	SI	S	C/NM	Y (4)	Y (5)
Convection Foil – SG Loop 4	30JMT20AB461	30UJA34008	H	H	ES	SI	S	C/NM	Y (4)	Y (5)
Convection Foil – SG Loop 4	30JMT20AB462	30UJA34008	H	H	ES	SI	S	C/NM	Y (4)	Y (5)
Convection Foil – SG Loop 4	30JMT20AB463	30UJA34008	H	H	ES	SI	S	C/NM	Y (4)	Y (5)
Convection Foil – SG Loop 4	30JMT20AB464	30UJA34008	H	H	ES	SI	S	C/NM	Y (4)	Y (5)
Convection Foil – SG Loop 4	30JMT20AB465	30UJA34008	H	H	ES	SI	S	C/NM	Y (4)	Y (5)
Convection Foil – SG Loop 4	30JMT20AB466	30UJA34008	H	H	ES	SI	S	C/NM	Y (4)	Y (5)
Convection Foil – SG Loop 4	30JMT20AB467	30UJA34008	H	H	ES	SI	S	C/NM	Y (4)	Y (5)
Convection Foil – SG Loop 4	30JMT20AB468	30UJA34008	H	H	ES	SI	S	C/NM	Y (4)	Y (5)
Convection Foil – SG Loop 4	30JMT20AB469	30UJA34008	H	H	ES	SI	S	C/NM	Y (4)	Y (5)
Convection Foil – SG Loop 4	30JMT20AB470	30UJA34008	H	H	ES	SI	S	C/NM	Y (4)	Y (5)
Convection Foil – SG Loop 4	30JMT20AB471	30UJA34008	H	H	ES	SI	S	C/NM	Y (4)	Y (5)
Convection Foil – SG Loop 4	30JMT20AB472	30UJA34008	H	H	ES	SI	S	C/NM	Y (4)	Y (5)
Convection Foil – SG Loop 4	30JMT20AB473	30UJA34008	H	H	ES	SI	S	C/NM	Y (4)	Y (5)
Convection Foil – SG Loop 4	30JMT20AB474	30UJA34008	H	H	ES	SI	S	C/NM	Y (4)	Y (5)
Convection Foil – SG Loop 4	30JMT20AB475	30UJA34008	H	H	ES	SI	S	C/NM	Y (4)	Y (5)
Convection Foil – SG Loop 4	30JMT20AB476	30UJA34008	H	H	ES	SI	S	C/NM	Y (4)	Y (5)

Table 3.10-1—List of Seismically and Dynamically Qualified Mechanical and Electrical Equipment (Sheet 151 of 197)

Name Tag (Equipment Description)	Tag Number	Local Area KKS ID (Room Location)	EQ Environment (Note 1)	Radiation Environment Zone (Note 2)	EQ Designated Function (Note 3)		Safety Class (Note 4)		EQ Program Designation (Note 5)	
Convection Foil – SG Loop 4	30JMT20AB477	30UJA34008	H	H	ES	SI	S	C/NM	Y (4)	Y (5)
Convection Foil – SG Loop 4	30JMT20AB478	30UJA34008	H	H	ES	SI	S	C/NM	Y (4)	Y (5)
Convection Foil – SG Loop 4	30JMT20AB479	30UJA34008	H	H	ES	SI	S	C/NM	Y (4)	Y (5)
Convection Foil – SG Loop 4	30JMT20AB480	30UJA34008	H	H	ES	SI	S	C/NM	Y (4)	Y (5)
Passive Autocatalytic Recombiner	30JMT10AT001	30UJA18019	H	H	ES	SII	NS-AQ	C/NM	Y (4)	Y (5)
Passive Autocatalytic Recombiner	30JMT10AT002	30UJA18007	H	H	ES	SII	NS-AQ	C/NM	Y (4)	Y (5)
Passive Autocatalytic Recombiner	30JMT10AT003	30UJA18008	H	H	ES	SII	NS-AQ	C/NM	Y (4)	Y (5)
Passive Autocatalytic Recombiner	30JMT10AT004	30UJA18003	H	H	ES	SII	NS-AQ	C/NM	Y (4)	Y (5)
Passive Autocatalytic Recombiner	30JMT10AT005	30UJA18004	H	H	ES	SII	NS-AQ	C/NM	Y (4)	Y (5)
Passive Autocatalytic Recombiner	30JMT10AT006	30UJA18018	H	H	ES	SII	NS-AQ	C/NM	Y (4)	Y (5)
Passive Autocatalytic Recombiner	30JMT10AT007	30UJA23019	H	H	ES	SII	NS-AQ	C/NM	Y (4)	Y (5)
Passive Autocatalytic Recombiner	30JMT10AT008	30UJA23006	H	H	ES	SII	NS-AQ	C/NM	Y (4)	Y (5)
Passive Autocatalytic Recombiner	30JMT10AT009	30UJA23015	H	H	ES	SII	NS-AQ	C/NM	Y (4)	Y (5)
Passive Autocatalytic Recombiner	30JMT10AT010	30UJA23006	H	H	ES	SII	NS-AQ	C/NM	Y (4)	Y (5)
Passive Autocatalytic Recombiner	30JMT10AT011	30UJA23007	H	H	ES	SII	NS-AQ	C/NM	Y (4)	Y (5)
Passive Autocatalytic Recombiner	30JMT10AT012	30UJA23008	H	H	ES	SII	NS-AQ	C/NM	Y (4)	Y (5)
Passive Autocatalytic Recombiner	30JMT10AT013	30UJA23016	H	H	ES	SII	NS-AQ	C/NM	Y (4)	Y (5)
Passive Autocatalytic Recombiner	30JMT10AT014	30UJA23009	H	H	ES	SII	NS-AQ	C/NM	Y (4)	Y (5)
Passive Autocatalytic Recombiner	30JMT10AT015	30UJA23009	H	H	ES	SII	NS-AQ	C/NM	Y (4)	Y (5)
Passive Autocatalytic Recombiner	30JMT10AT016	30UJA15001	H	H	ES	SII	NS-AQ	C/NM	Y (4)	Y (5)
Passive Autocatalytic Recombiner	30JMT10AT017	30UJA23002	H	H	ES	SII	NS-AQ	C/NM	Y (4)	Y (5)
Passive Autocatalytic Recombiner	30JMT10AT018	30UJA23002	H	H	ES	SII	NS-AQ	C/NM	Y (4)	Y (5)
Passive Autocatalytic Recombiner	30JMT10AT019	30UJA23013	H	H	ES	SII	NS-AQ	C/NM	Y (4)	Y (5)
Passive Autocatalytic Recombiner	30JMT10AT020	30UJA23003	H	H	ES	SII	NS-AQ	C/NM	Y (4)	Y (5)
Passive Autocatalytic Recombiner	30JMT10AT021	30UJA23004	H	H	ES	SII	NS-AQ	C/NM	Y (4)	Y (5)
Passive Autocatalytic Recombiner	30JMT10AT022	30UJA23005	H	H	ES	SII	NS-AQ	C/NM	Y (4)	Y (5)
Passive Autocatalytic Recombiner	30JMT10AT023	30UJA23014	H	H	ES	SII	NS-AQ	C/NM	Y (4)	Y (5)
Passive Autocatalytic Recombiner	30JMT10AT024	30UJA23005	H	H	ES	SII	NS-AQ	C/NM	Y (4)	Y (5)
Passive Autocatalytic Recombiner	30JMT10AT025	30UJA29019	H	H	ES	SII	NS-AQ	C/NM	Y (4)	Y (5)
Passive Autocatalytic Recombiner	30JMT10AT026	30UJA29016	H	H	ES	SII	NS-AQ	C/NM	Y (4)	Y (5)
Passive Autocatalytic Recombiner	30JMT10AT027	30UJA29013	H	H	ES	SII	NS-AQ	C/NM	Y (4)	Y (5)
Passive Autocatalytic Recombiner	30JMT10AT028	30UJA29018	H	H	ES	SII	NS-AQ	C/NM	Y (4)	Y (5)
Passive Autocatalytic Recombiner	30JMT10AT029	30UJA34019	H	H	ES	SII	NS-AQ	C/NM	Y (4)	Y (5)

Table 3.10-1—List of Seismically and Dynamically Qualified Mechanical and Electrical Equipment (Sheet 152 of 197)

Name Tag (Equipment Description)	Tag Number	Local Area KKS ID (Room Location)	EQ Environment (Note 1)	Radiation Environment Zone (Note 2)	EQ Designated Function (Note 3)		Safety Class (Note 4)		EQ Program Designation (Note 5)	
Passive Autocatalytic Recombiner	30JMT10AT030	30UJA34007	H	H	ES	SII	NS-AQ	C/NM	Y (4)	Y (5)
Passive Autocatalytic Recombiner	30JMT10AT031	30UJA34007	H	H	ES	SII	NS-AQ	C/NM	Y (4)	Y (5)
Passive Autocatalytic Recombiner	30JMT10AT032	30UJA34008	H	H	ES	SII	NS-AQ	C/NM	Y (4)	Y (5)
Passive Autocatalytic Recombiner	30JMT10AT033	30UJA34008	H	H	ES	SII	NS-AQ	C/NM	Y (4)	Y (5)
Passive Autocatalytic Recombiner	30JMT10AT034	30UJA34003	H	H	ES	SII	NS-AQ	C/NM	Y (4)	Y (5)
Passive Autocatalytic Recombiner	30JMT10AT035	30UJA34003	H	H	ES	SII	NS-AQ	C/NM	Y (4)	Y (5)
Passive Autocatalytic Recombiner	30JMT10AT036	30UJA34004	H	H	ES	SII	NS-AQ	C/NM	Y (4)	Y (5)
Passive Autocatalytic Recombiner	30JMT10AT037	30UJA34004	H	H	ES	SII	NS-AQ	C/NM	Y (4)	Y (5)
Passive Autocatalytic Recombiner	30JMT10AT038	30UJA38001	H	H	ES	SII	NS-AQ	C/NM	Y (4)	Y (5)
Passive Autocatalytic Recombiner	30JMT10AT039	30UJA40001	H	H	ES	SII	NS-AQ	C/NM	Y (4)	Y (5)
Passive Autocatalytic Recombiner	30JMT10AT040	30UJA40001	H	H	ES	SII	NS-AQ	C/NM	Y (4)	Y (5)
Passive Autocatalytic Recombiner	30JMT10AT041	30UJA40001	H	H	ES	SII	NS-AQ	C/NM	Y (4)	Y (5)
Passive Autocatalytic Recombiner	30JMT10AT042	30UJA40001	H	H	ES	SII	NS-AQ	C/NM	Y (4)	Y (5)
Passive Autocatalytic Recombiner	30JMT10AT043	30UJA38001	H	H	ES	SII	NS-AQ	C/NM	Y (4)	Y (5)
Passive Autocatalytic Recombiner	30JMT10AT044	30UJA40001	H	H	ES	SII	NS-AQ	C/NM	Y (4)	Y (5)
Passive Autocatalytic Recombiner	30JMT10AT045	30UJA40001	H	H	ES	SII	NS-AQ	C/NM	Y (4)	Y (5)
Passive Autocatalytic Recombiner	30JMT10AT046	30UJA40001	H	H	ES	SII	NS-AQ	C/NM	Y (4)	Y (5)
Passive Autocatalytic Recombiner	30JMT10AT047	30UJA40001	H	H	ES	SII	NS-AQ	C/NM	Y (4)	Y (5)
ELECTRICAL SYSTEMS										
Class 1E Uninterruptible Power Supply (EUPS)										
As a result of the EQ program screening, no components in this system were identifed for seismic qualification.										
Emergency Power Supply (EPSS)										
As a result of the EQ program screening, no components in this system were identifed for seismic qualification.										
Non-Class 1E Uninterruptible Power Supply (NUPS)										
As a result of the EQ program screening, no components in this system were identifed for seismic qualification.										
Lighting & Small Power System (LGT)										
As a result of the EQ program screening, no components in this system were identifed for seismic qualification.										
Normal Power Supply (NPSS)										
As a result of the EQ program screening, no components in this system were identifed for seismic qualification.										
12-Hour Uninterruptible Power Supply (12UPS)										

Table 3.10-1—List of Seismically and Dynamically Qualified Mechanical and Electrical Equipment (Sheet 153 of 197)

Name Tag (Equipment Description)	Tag Number	Local Area KKS ID (Room Location)	EQ Environment (Note 1)	Radiation Environment Zone (Note 2)	EQ Designated Function (Note 3)	Safety Class (Note 4)	EQ Program Designation (Note 5)
As a result of the EQ program screening, no components in this system were identifed for seismic qualification.							
INSTRUMENTATION AND CONTROL SYSTEMS							
Protection System (PS)							
As a result of the EQ program screening, no components in this system were identifed for seismic qualification.							
Safety Automation System (SAS)							
As a result of the EQ program screening, no components in this system were identifed for seismic qualification.							
Priority & Actuator Control System (PACS)							
As a result of the EQ program screening, no components in this system were identifed for seismic qualification.							
Safety Information & Control System (SICS)							
As a result of the EQ program screening, no components in this system were identifed for seismic qualification.							
Incore Instrumentation System (ICIS)							
As a result of the EQ program screening, no components in this system were identifed for seismic qualification.							
Excore Instrumentation System (EIS)							
As a result of the EQ program screening, no components in this system were identifed for seismic qualification.							
Reactor Pressure Vessel Level Measurment System (RPVL)							
As a result of the EQ program screening, no components in this system were identifed for seismic qualification.							
Control Rod Drive Control System (CRDCS)							
As a result of the EQ program screening, no components in this system were identifed for seismic qualification.							
Hydrogen Monitoring System (HCMS)							
Black Box *JMU10*	30JMU10GH001	31UJH10011	M	H	SI	S	Y(5)
I-V Sample 1 Train 1	30JMU50AA001	34UJH10010	M	H	SII	NS-AQ	Y(5)
I-V Sample 2 Train 1	30JMU50AA002	34UJH10010	M	H	SII	NS-AQ	Y(5)
I-V Sample 3 Train 1	30JMU50AA003	34UJH10010	M	H	SII	NS-AQ	Y(5)
I-V Sample 4 Train 1	30JMU50AA004	34UJH10010	M	H	SII	NS-AQ	Y(5)
I-V Sensor Bypass	30JMU50AA010	34UJH10010	M	H	SII	NS-AQ	Y(5)
I-V Upstr Sensors	30JMU50AA011	34UJH10010	M	H	SII	NS-AQ	Y(5)
I-V Upstr Sensors	30JMU50AA012	34UJH10010	M	H	SII	NS-AQ	Y(5)
I-V Vacuum Unit	30JMU50AA013	34UJH10010	M	H	SII	NS-AQ	Y(5)
I-V Vacuum PP	30JMU50AA014	34UJH10010	M	H	SII	NS-AQ	Y(5)

Table 3.10-1—List of Seismically and Dynamically Qualified Mechanical and Electrical Equipment (Sheet 154 of 197)

Name Tag (Equipment Description)	Tag Number	Local Area KKS ID (Room Location)	EQ Environment (Note 1)	Radiation Environment Zone (Note 2)	EQ Designated Function (Note 3)	Safety Class (Note 4)	EQ Program Designation (Note 5)
I-V Backfeed Train 1	30JMU50AA015	34UJH10010	M	H	SII	NS-AQ	Y(5)
I-V Test Unit	30JMU50AA016	34UJH10010	M	H	SII	NS-AQ	Y(5)
I-V Test Gas	30JMU50AA017	34UJH10010	M	H	SII	NS-AQ	Y(5)
P ADJ-V	30JMU50AA020	34UJH10010	M	H	SII	NS-AQ	Y(5)
I-V Purg N2	30JMU50AA021	34UJH10010	M	H	SII	NS-AQ	Y(5)
I-V Purg N2	30JMU50AA022	34UJH10010	M	H	SII	NS-AQ	Y(5)
I-V Purg N2	30JMU50AA023	34UJH10010	M	H	SII	NS-AQ	Y(5)
I-V Purg N2	30JMU50AA024	34UJH10010	M	H	SII	NS-AQ	Y(5)
I-V N2 Sup *QJB*	30JMU50AA031	34UJH10010	M	H	SII	NS-AQ	Y(5)
Ck-V N2 Sup *QJB*	30JMU50AA032	34UJH10010	M	H	SII	NS-AQ	Y(5)
I-V N2 Sup Gas Cyl	30JMU50AA034	34UJH10010	M	H	SII	NS-AQ	Y(5)
I-V AT Batt P Redu	30JMU50AA035	34UJH10011	M	H	SII	NS-AQ	Y(5)
I-V AT Batt P Redu	30JMU50AA036	34UJH10011	M	H	SII	NS-AQ	Y(5)
I-V AT Batt P Redu	30JMU50AA037	34UJH10011	M	H	SII	NS-AQ	Y(5)
CK-V Backfeed Line	30JMU50AA040	30UJA29014	H	H	SII	NS-AQ	Y(5)
PIL-V Samp I-V	30JMU50AA051	34UJH10010	M	H	SII	NS-AQ	Y(5)
PIL-V Samp I-V	30JMU50AA052	34UJH10010	M	H	SII	NS-AQ	Y(5)
PIL-V Samp I-V	30JMU50AA053	34UJH10010	M	H	SII	NS-AQ	Y(5)
PIL-V Samp I-V	30JMU50AA054	34UJH10010	M	H	SII	NS-AQ	Y(5)
PIL-V Sensor Bypass	30JMU50AA060	34UJH10010	M	H	SII	NS-AQ	Y(5)
PIL-V Upstr Sensors	30JMU50AA061	34UJH10010	M	H	SII	NS-AQ	Y(5)
PIL-V Dnstr Sensors	30JMU50AA062	34UJH10010	M	H	SII	NS-AQ	Y(5)
PIL-V Vacuum Unit	30JMU50AA063	34UJH10010	M	H	SII	NS-AQ	Y(5)
PIL-V Backfeed Line	30JMU50AA065	34UJH10010	M	H	SII	NS-AQ	Y(5)
PIL-V Test Unit	30JMU50AA066	34UJH10010	M	H	SII	NS-AQ	Y(5)
PIL-V Purg N2	30JMU50AA071	34UJH10010	M	H	SII	NS-AQ	Y(5)
PIL-V Purg N2	30JMU50AA072	34UJH10010	M	H	SII	NS-AQ	Y(5)
PIL-V Purg N2	30JMU50AA073	34UJH10010	M	H	SII	NS-AQ	Y(5)
PIL-V Purg N2	30JMU50AA074	34UJH10010	M	H	SII	NS-AQ	Y(5)
H2 Isolation Valve UJA	30JMU50AA075	30UJA11016	H	H	SI	S	Y(5)
H2 Isolation Valve UJH	30JMU50AA076	34UJH10011	M	H	PAM SI	S	Y(5)
H2 Isolation Valve UJA	30JMU50AA077	30UJA11016	H	H	PAM SI	S	Y(5)
H2 Isolation Valve UJH	30JMU50AA078	34UJH10011	M	H	PAM SI	S	Y(5)

Table 3.10-1—List of Seismically and Dynamically Qualified Mechanical and Electrical Equipment (Sheet 155 of 197)

Name Tag (Equipment Description)	Tag Number	Local Area KKS ID (Room Location)	EQ Environment (Note 1)	Radiation Environment Zone (Note 2)	EQ Designated Function (Note 3)	Safety Class (Note 4)	EQ Program Designation (Note 5)
H2 Isolation Valve UJA	30JMU50AA079	30UJA11016	H	H	PAM SI	S	Y(5)
H2 Isolation Valve UJH	30JMU50AA080	34UJH10011	M	H	PAM SI	S	Y(5)
H2 Isolation Valve UJA	30JMU50AA081	30UJA11016	H	H	PAM SI	S	Y(5)
H2 Isolation Valve UJH	30JMU50AA082	34UJH10011	M	H	PAM SI	S	Y(5)
H2 Isolation Valve UJH	30JMU50AA083	34UJH10011	M	H	PAM SI	S	Y(5)
H2 Isolation Valve UJA	30JMU50AA084	30UJA11016	H	H	PAM SI	S	Y(5)
PRD-V N2 Sup	30JMU50AA101	34UJH10010	M	H	SII	NS-AQ	Y(5)
PRD-V N2	30JMU50AA102	34UJH10010	M	H	SII	NS-AQ	Y(5)
P ADJ-V Dnstr Sensors	30JMU50AA103	34UJH10010	M	H	SII	NS-AQ	Y(5)
P ADJ-V N2 Sup SOL-V	30JMU50AA104	34UJH10010	M	H	SII	NS-AQ	Y(5)
P ADJ-V N2 Sup Test	30JMU50AA105	34UJH10010	M	H	SII	NS-AQ	Y(5)
PRD-V AT Batt P Redu	30JMU50AA111	34UJH10011	M	H	SII	NS-AQ	Y(5)
PRD-V AT Batt P Redu	30JMU50AA112	34UJH10011	M	H	SII	NS-AQ	Y(5)
S-V N2	30JMU50AA191	34UJH10010	M	H	SII	NS-AQ	Y(5)
S-V Test Unit	30JMU50AA192	34UJH10010	M	H	SII	NS-AQ	Y(5)
S-V at Batt P Redu	30JMU50AA193	34UJH10011	M	H	SII	NS-AQ	Y(5)
I-V	30JMU50AA401	34UJH10010	M	H	SII	NS-AQ	Y(5)
I-V	30JMU50AA402	34UJH10010	M	H	SII	NS-AQ	Y(5)
D-V Vacuum Unit	30JMU50AA403	34UJH10010	M	H	SII	NS-AQ	Y(5)
D-V at L Test Unit	30JMU50AA404	34UJH10010	M	H	SII	NS-AQ	Y(5)
V-V at Batt P Redu	30JMU50AA501	34UJH10011	M	H	SII	NS-AQ	Y(5)
V-V at Batt P Redu	30JMU50AA502	34UJH10011	M	H	SII	NS-AQ	Y(5)
Trac HT Outs Cont	30JMU50AH001	34UJH10011	M	H	SII	NS-AQ	Y(5)
Trac HT Outs Cont	30JMU50AH002	34UJH10011	M	H	SII	NS-AQ	Y(5)
Trac HT Outs Cont	30JMU50AH003	34UJH10011	M	H	SII	NS-AQ	Y(5)
Heater Cont Pen	30JMU50AH004	30UJA29014	H	H	SII	NS-AQ	Y(5)
Heater Cont Pen	30JMU50AH005	30UJA29014	H	H	SII	NS-AQ	Y(5)
Heater Cont Pen	30JMU50AH006	30UJA29014	H	H	SII	NS-AQ	Y(5)
Heater Cont Pen	30JMU50AH007	30UJA29014	H	H	SII	NS-AQ	Y(5)
Fan	30JMU50AN001	34UJH10010	M	H	SII	NS-AQ	Y(5)
Vacuum PP	30JMU50AP001	34UJH10010	M	H	SII	NS-AQ C/NM	Y(3) Y(5)
Vacuum PP	30JMU50AP002	34UJH10010	M	H	SII	NS-AQ C/NM	Y(3) Y(5)
Vacuum Tank	30JMU50BB001	34UJH10010	M	H	SII	NS-AQ	Y(5)

Table 3.10-1—List of Seismically and Dynamically Qualified Mechanical and Electrical Equipment (Sheet 156 of 197)

Name Tag (Equipment Description)	Tag Number	Local Area KKS ID (Room Location)	EQ Environment (Note 1)	Radiation Environment Zone (Note 2)	EQ Designated Function (Note 3)	Safety Class (Note 4)	EQ Program Designation (Note 5)
Vacuum Tank	30JMU50BB002	34UJH10010	M	H	SII	NS-AQ	Y(5)
Test Vessel	30JMU50BB003	34UJH10010	M	H	SII	NS-AQ	Y(5)
Gas Cyl N2 Supp	30JMU50BB011	34UJH10011	M	H	SII	NS-AQ	Y(5)
Gas Cyl N2 Supp	30JMU50BB012	34UJH10011	M	H	SII	NS-AQ	Y(5)
ATM Sampler	30JMU50BZ001	30UJA40001	H	H	SII	NS-AQ	Y(5)
ATM Sampler	30JMU50BZ002	30UJA29007	H	H	SII	NS-AQ	Y(5)
ATM Sampler	30JMU50BZ003	30UJA18015	H	H	SII	NS-AQ	Y(5)
ATM Sampler	30JMU50BZ004	30UJA29004	H	H	SII	NS-AQ	Y(5)
Processing Unit	30JMU50BZ010	34UJH10010	M	H	SII	NS-AQ	Y(5)
P Redu Station	30JMU50BZ020	34UJH10011	M	H	SII	NS-AQ	Y(5)
Black Box *JMU50*	30JMU50GH001	34UJH10011	M	H	SII	NS-AQ	Y(5)
I-V Sample 1 Train 2	30JMU51AA001	31UJH10010	M	H	SII	NS-AQ	Y(5)
I-V Sample 2 Train 2	30JMU51AA002	31UJH10010	M	H	SII	NS-AQ	Y(5)
I-V Sample 3 Train 2	30JMU51AA003	31UJH10010	M	H	SII	NS-AQ	Y(5)
I-V Sample 4 Train 2	30JMU51AA004	31UJH10010	M	H	SII	NS-AQ	Y(5)
I-V Sensor Bypass	30JMU51AA010	31UJH10010	M	H	SII	NS-AQ	Y(5)
I-V Upstr Sensors	30JMU51AA011	31UJH10010	M	H	SII	NS-AQ	Y(5)
I-V Upstr Sensors	30JMU51AA012	31UJH10010	M	H	SII	NS-AQ	Y(5)
I-V Vacuum Unit	30JMU51AA013	31UJH10010	M	H	SII	NS-AQ	Y(5)
I-V Vacuum Pp	30JMU51AA014	31UJH10010	M	H	SII	NS-AQ	Y(5)
I-V Backfeed Train 2	30JMU51AA015	31UJH10010	M	H	SII	NS-AQ	Y(5)
I-V Test Unit	30JMU51AA016	31UJH10010	M	H	SII	NS-AQ	Y(5)
I-V Test Gas	30JMU51AA017	31UJH10010	M	H	SII	NS-AQ	Y(5)
P ADJ-V	30JMU51AA020	31UJH10010	M	H	SII	NS-AQ	Y(5)
I-V Purg N2	30JMU51AA021	31UJH10010	M	H	SII	NS-AQ	Y(5)
I-V Purg N2	30JMU51AA022	31UJH10010	M	H	SII	NS-AQ	Y(5)
I-V Purg N2	30JMU51AA023	31UJH10010	M	H	SII	NS-AQ	Y(5)
I-V Purg N2	30JMU51AA024	31UJH10010	M	H	SII	NS-AQ	Y(5)
I-V N2 Sup *QJB*	30JMU51AA031	31UJH10010	M	H	SII	NS-AQ	Y(5)
CK-V N2 Sup *QJB*	30JMU51AA032	31UJH10010	M	H	SII	NS-AQ	Y(5)
I-V N2 Sup Gas Cyl	30JMU51AA034	31UJH10010	M	H	SII	NS-AQ	Y(5)
I-V AT Batt P Redu	30JMU51AA035	31UJH10011	M	H	SII	NS-AQ	Y(5)
I-V AT Batt P Redu	30JMU51AA036	31UJH10011	M	H	SII	NS-AQ	Y(5)

Table 3.10-1—List of Seismically and Dynamically Qualified Mechanical and Electrical Equipment (Sheet 157 of 197)

Name Tag (Equipment Description)	Tag Number	Local Area KKS ID (Room Location)	EQ Environment (Note 1)	Radiation Environment Zone (Note 2)	EQ Designated Function (Note 3)	Safety Class (Note 4)	EQ Program Designation (Note 5)
I-V AT Batt P Redu	30JMU51AA037	31UJH10011	M	H	SII	NS-AQ	Y(5)
Ck-V Backfeed Line	30JMU51AA040	30UJA29014	H	H	SII	NS-AQ	Y(5)
PIL-V Samp I-V	30JMU51AA051	31UJH10010	M	H	SII	NS-AQ	Y(5)
PIL-V Samp I-V	30JMU51AA052	31UJH10010	M	H	SII	NS-AQ	Y(5)
PIL-V Samp I-V	30JMU51AA053	31UJH10010	M	H	SII	NS-AQ	Y(5)
PIL-V Samp I-V	30JMU51AA054	31UJH10010	M	H	SII	NS-AQ	Y(5)
PIL-V Sensor Bypass	30JMU51AA060	31UJH10010	M	H	SII	NS-AQ	Y(5)
PIL-V Upstr Sensors	30JMU51AA061	31UJH10010	M	H	SII	NS-AQ	Y(5)
PIL-V Dnstr Sensors	30JMU51AA062	31UJH10010	M	H	SII	NS-AQ	Y(5)
PIL-V Vacuum Unit	30JMU51AA063	31UJH10010	M	H	SII	NS-AQ	Y(5)
PIL-V Backfeed Line	30JMU51AA065	31UJH10010	M	H	SII	NS-AQ	Y(5)
PIL-V Test Unit	30JMU51AA066	31UJH10010	M	H	SII	NS-AQ	Y(5)
PIL-V Purg N2	30JMU51AA071	31UJH10010	M	H	SII	NS-AQ	Y(5)
PIL-V Purg N2	30JMU51AA072	31UJH10010	M	H	SII	NS-AQ	Y(5)
PIL-V Purg N2	30JMU51AA073	31UJH10010	M	H	SII	NS-AQ	Y(5)
PIL-V Purg N2	30JMU51AA074	31UJH10010	M	H	SII	NS-AQ	Y(5)
H2 Isolation Valve UJA	30JMU51AA085	30UJA11013	H	H	PAM SI	S	Y(5)
H2 Isolation Valve UJH	30JMU51AA086	31UJH10011	M	H	PAM SI	S	Y(5)
H2 Isolation Valve UJA	30JMU51AA087	30UJA11013	H	H	PAM SI	S	Y(5)
H2 Isolation Valve UJH	30JMU51AA088	31UJH10011	M	H	PAM SI	S	Y(5)
H2 Isolation Valve UJA	30JMU51AA089	30UJA11013	H	H	PAM SI	S	Y(5)
H2 Isolation Valve UJH	30JMU51AA090	31UJH10011	M	H	PAM SI	S	Y(5)
H2 Isolation Valve UJA	30JMU51AA091	30UJA11013	H	H	PAM SI	S	Y(5)
H2 Isolation Valve UJH	30JMU51AA092	31UJH10011	M	H	PAM SI	S	Y(5)
H2 Isolation Valve UJH	30JMU51AA093	31UJH10011	M	H	PAM SI	S	Y(5)
H2 Isolation Valve UJA	30JMU51AA094	30UJA11013	H	H	PAM SI	S	Y (5)
PRD-V N2 Sup	30JMU51AA101	31UJH10010	M	H	SII	NS-AQ	Y(5)
PRD-V N2	30JMU51AA102	31UJH10010	M	H	SII	NS-AQ	Y(5)
P ADJ-V Dnstr Sensors	30JMU51AA103	31UJH10010	M	H	SII	NS-AQ	Y(5)
P ADJ-V N2 Sup Sol-V	30JMU51AA104	31UJH10010	M	H	SII	NS-AQ	Y(5)
P ADJ-V N2 Sup Test	30JMU51AA105	31UJH10010	M	H	SII	NS-AQ	Y(5)
PRD-V at Batt P Redu	30JMU51AA111	31UJH10011	M	H	SII	NS-AQ	Y(5)
PRD-V at Batt P Redu	30JMU51AA112	31UJH10011	M	H	SII	NS-AQ	Y(5)

Table 3.10-1—List of Seismically and Dynamically Qualified Mechanical and Electrical Equipment (Sheet 158 of 197)

Name Tag (Equipment Description)	Tag Number	Local Area KKS ID (Room Location)	EQ Environment (Note 1)	Radiation Environment Zone (Note 2)	EQ Designated Function (Note 3)	Safety Class (Note 4)		EQ Program Designation (Note 5)	
S-V N2	30JMU51AA191	34UJH10010	M	H	SII	NS-AQ			Y(5)
S-V Test Unit	30JMU51AA192	31UJH10010	M	H	SII	NS-AQ			Y(5)
S-V at Batt P Redu	30JMU51AA193	31UJH10011	M	H	SII	NS-AQ			Y(5)
I-V	30JMU51AA401	31UJH10010	M	H	SII	NS-AQ			Y(5)
I-V	30JMU51AA402	31UJH10010	M	H	SII	NS-AQ			Y(5)
D-V Vacuum Unit	30JMU51AA403	31UJH10010	M	H	SII	NS-AQ			Y(5)
D-V at L Test Unit	30JMU51AA404	31UJH10010	M	H	SII	NS-AQ			Y(5)
V-V at Batt P Redu	30JMU51AA501	31UJH10011	M	H	SII	NS-AQ			Y(5)
V-V at Batt P Redu	30JMU51AA502	31UJH10011	M	H	SII	NS-AQ			Y(5)
Trac HT Outs Cont	30JMU51AH001	31UJH10011	M	H	SII	NS-AQ			Y(5)
Trac HT Outs Cont	30JMU51AH002	31UJH10011	M	H	SII	NS-AQ			Y(5)
Trac HT Outs Cont	30JMU51AH003	31UJH10011	M	H	SII	NS-AQ			Y(5)
Heater Cont Pen	30JMU51AH004	30UJA29014	H	H	SII	NS-AQ			Y(5)
Heater Cont Pen	30JMU51AH005	30UJA29014	H	H	SII	NS-AQ			Y(5)
Heater Cont Pen	30JMU51AH006	30UJA29014	H	H	SII	NS-AQ			Y(5)
Heater Cont Pen	30JMU51AH007	30UJA29014	H	H	SII	NS-AQ			Y(5)
Fan	30JMU51AN001	31UJH10010	M	H	SII	NS-AQ			Y(5)
Vacuum PP	30JMU51AP001	31UJH10010	M	H	SII	NS-AQ	C/NM	Y(3)	Y(5)
Vacuum PP	30JMU51AP002	31UJH10010	M	H	SII	NS-AQ	C/NM	Y(3)	Y(5)
Vacuum Tank	30JMU51BB001	31UJH10010	M	H	SII	NS-AQ			Y(5)
Vacuum Tank	30JMU51BB002	31UJH10010	M	H	SII	NS-AQ			Y(5)
Test Vessel	30JMU51BB003	31UJH10010	M	H	SII	NS-AQ			Y(5)
Gas Cyl N2 Supp	30JMU51BB011	31UJH10011	M	H	SII	NS-AQ			Y(5)
Gas Cyl N2 Supp	30JMU51BB012	31UJH10011	M	H	SII	NS-AQ			Y(5)
ATM Sampler	30JMU51BZ001	30UJA40001	H	H	SII	NS-AQ			Y(5)
ATM Sampler	30JMU51BZ002	30UJA29003	H	H	SII	NS-AQ			Y(5)
ATM Sampler	30JMU51BZ003	30UJA18013	H	H	SII	NS-AQ			Y(5)
ATM Sampler	30JMU51BZ004	30UJA29008	H	H	SII	NS-AQ			Y(5)
Processing Unit	30JMU51BZ010	31UJH10010	M	H	SII	NS-AQ			Y(5)
P Redu Station	30JMU51BZ020	31UJH10010	M	H	SII	NS-AQ			Y(5)
Black Box *JMU51*	30JMU51GH001	31UJH10011	M	H	SII	NS-AQ			Y(5)
Radiation Monitoring System (RMS)									
BBX Containment High Range Dose Rate	30JYK00GH007	30UFA29090	M	H	SI	S			Y (5)

Table 3.10-1—List of Seismically and Dynamically Qualified Mechanical and Electrical Equipment (Sheet 159 of 197)

Name Tag (Equipment Description)	Tag Number	Local Area KKS ID (Room Location)	EQ Environment (Note 1)	Radiation Environment Zone (Note 2)	EQ Designated Function (Note 3)			Safety Class (Note 4)		EQ Program Designation (Note 5)		
BBX Containment High Range Dose Rate	30JYK00GH008	30UFA29090	M	H			SI	S				Y (5)
BBX Fuel Bldg Ventilation System Gamma	30JYK00GH050	30UFA29045	M	H	ES		SI	S				Y (5)
BBX Fuel Bldg Ventilation System Gamma	30JYK00GH051	30UFA29045	M	H	ES		SI	S				Y (5)
BBX Main Control Room Vent Duct Gamma	30JYK00GH061	32UJK31018	M	M			SI	S				Y (5)
BBX Main Control Room Vent Duct Gamma	30JYK00GH062	33UJK31018	M	M			SI	S				Y (5)
HVAC SYSTEMS												
Containment Building Ventilation System (CBVS)												
KLA1 Containment Iso Valve 42 ft FB	30KLA10AA001	30UFA21095	M	H	ES	PAM	SI	S	C/NM	Y (3)		Y (5)
KLA 1 Cont Iso Solen Glob Valv 1	30KLA10AA001A	30UFA21095	M	H	ES		SI	S	C/NM	Y (3)		Y (5)
KLA1 1 Cont Iso Solen Glob Valv 2	30KLA10AA001B	30UFA21095	M	H	ES		SI	S	C/NM	Y (3)		Y (5)
KLA 1 Containment Iso Valve 42 ft RB	30KLA10AA003	30UJA18016	H	H	ES	PAM	SI	S	C/NM		Y (4)	Y (5)
KLA1 1 Cont Iso Solen Glob Valv 3	30KLA10AA003A	30UJA18016	H	H	ES		SI	S	C/NM		Y (4)	Y (5)
KLA 5 Tech Rm Fire Damper Sup	30KLA10AA004	30UJA29015	H	H			SII	NS-AQ	C/NM		Y (4)	Y (5)
KLA1 Staircase Sup Fire Damp	30KLA10AA006	30UJA11020	H	H			SII	NS-AQ	C/NM		Y (4)	Y (5)
KLA 1 Staircase Sup Branch Fire Dmpr	30KLA10AA007	30UJA07013	H	H			SII	NS-AQ	C/NM		Y (4)	Y (5)
KLA 1 Staircase South Sup Fire Dmpr	30KLA10AA008	30UJA15010	H	H			SII	NS-AQ	C/NM		Y (4)	Y (5)
KLA 1 Plen Sup Fire Damp	30KLA10AA012	30UFA21065	M	H			SII	NS-AQ	C/NM	Y (3)		Y (5)
Flame Arrestor KLA 1	30KLA10AT007	30UJA18016	H	H			SII	NS-AQ	C/NM		Y (4)	Y (5)
KLA 2 Cont Iso Valve 48 ft FB	30KLA20AA001	30UJA23015	H	H	ES	PAM	SI	S	C/NM		Y (4)	Y (5)
KLA 2 Cont Iso Solen Glob Val 48 ft FB	30KLA20AA001A	30UJA23015	H	H	ES		SI	S	C/NM		Y (4)	Y (5)
KLA 2 Cont Iso Valve 48 ft RB	30KLA20AA003	30UFA24045	M	H	ES	PAM	SI	S	C/NM	Y (3)		Y (5)
KLA 2 Cont Iso Solen Glob Val 1 48 ft RB	30KLA20AA003A	30UFA24045	M	H	ES		SI	S	C/NM	Y (3)		Y (5)
KLA 2 Cont Iso Solen Glob Val 2 48 ft RB	30KLA20AA003B	30UFA24045	M	H	ES		SI	S	C/NM	Y (3)		Y (5)
KLA 5 Tech Rm Fire Damper Exh	30KLA20AA007	30UJA29015	H	H			SII	NS-AQ	C/NM		Y (4)	Y (5)
North Staircase Exh Fire Dmpr	30KLA20AA009	30UJA34011	H	H			SII	NS-AQ	C/NM		Y (4)	Y (5)
South Staircase Exh Fire Dmpr	30KLA20AA010	30UJA29023	H	H			SII	NS-AQ	C/NM		Y (4)	Y (5)
KLA 2 Fire Damp UFA24045	30KLA20AA011	30UFA24045	M	H			SI	S	C/NM	Y (3)		Y (5)
KLA 2 Fire Damp UFA24081	30KLA20AA012	30UFA24081	M	H			SI	S	C/NM	Y (3)		Y (5)
KLA 2 Fire Damp UFA24053	30KLA20AA014	30UFA24053	M	H			SI	S	C/NM	Y (3)		Y (5)
Flame Arrestor KLA 2	30KLA20AT002	30UJA23016	H	H			SI	S	C/NM		Y (4)	Y (5)
KLA Purge Filtr Tr 1 Control Damper	30KLA21AA001	30UFA24080	M	H			SI	S	C/NM	Y (3)		Y (5)
KLA Purge Filtr Tr 1 Man Ch Dmpr	30KLA21AA003	30UFA24085	M	H			SI	S	C/NM	Y (3)		Y (5)

Table 3.10-1—List of Seismically and Dynamically Qualified Mechanical and Electrical Equipment (Sheet 160 of 197)

Name Tag (Equipment Description)	Tag Number	Local Area KKS ID (Room Location)	EQ Environment (Note 1)	Radiation Environment Zone (Note 2)	EQ Designated Function (Note 3)			Safety Class (Note 4)		EQ Program Designation (Note 5)		
KLA Purge Filter Tr 1 Isolation Damper 1	30KLA21AA004	30UFA24081	M	H			SI	S	C/NM	Y (3)		Y (5)
KLA Purge Filter Tr 1 Isolation Damper 2	30KLA21AA007	30UFA24081	M	H			SI	S	C/NM	Y (3)		Y (5)
Elec Air Heater KLA 2 Tr 1 Filt	30KLA21AH005	30UFA24081	M	H			SI	S	C/NM	Y (3)		Y (5)
KLA 2 Tr 1 Fan	30KLA21AN001	30UFA24085	M	H			SI	S	C/NM	Y (3)		Y (5)
KLA 2 Tr 1 Prefilter	30KLA21AT001	30UFA24081	M	H			SI	S	C/NM	Y (3)		Y (5)
KLA 2 Tr 1 HEPA Filter	30KLA21AT002	30UFA24081	M	H			SI	S	C/NM	Y (3)		Y (5)
KLA 2 Tr 1 Iodine Filter	30KLA21AT003	30UFA24081	M	H			SI	S	C/NM	Y (3)		Y (5)
KLA 2 Tr 1 HEPA Post Filter	30KLA21AT004	30UFA24080	M	H			SI	S	C/NM	Y (3)		Y (5)
KLA Purge Filtr Tr 2 Control Dmpr	30KLA22AA001	30UFA24081	M	H			SI	S	C/NM	Y (3)		Y (5)
KLA Purge Filtr Tr 2 Man Ch Dmpr	30KLA22AA003	30UFA24085	M	H			SI	S	C/NM	Y (3)		Y (5)
KLA 2 Tr 2 Damper	30KLA22AA004	30UFA24081	M	H			SI	S	C/NM	Y (3)		Y (5)
KLA 2 Tr 2 Damper	30KLA22AA007	30UFA24081	M	H			SI	S	C/NM	Y (3)		Y (5)
Elec Air Heater KLA 2 Tr 2 Filt	30KLA22AH005	30UFA24081	M	H			SI	S	C/NM	Y (3)		Y (5)
KLA 2 Tr 2 Fan	30KLA22AN001	30UFA24085	M	H			SI	S	C/NM	Y (3)		Y (5)
KLA 2 Tr 2 Prefilter	30KLA22AT001	30UFA24081	M	H			SI	S	C/NM	Y (3)		Y (5)
KLA 2 Tr 2 HEPA Filter	30KLA22AT002	30UFA24081	M	H			SI	S	C/NM	Y (3)		Y (5)
KLA 2 Tr 2 Iodine Filter	30KLA22AT003	30UFA24081	M	H			SI	S	C/NM	Y (3)		Y (5)
KLA 2 Tr 2 HEPA Post Filter	30KLA22AT004	30UFA24081	M	H			SI	S	C/NM	Y (3)		Y (5)
KLA Plen Sup Motor Bal Dmpr	30KLA30AA001	30UFA21065	M	H			SII	NS-AQ	C/NM	Y (3)		Y (5)
KLA 3 Cont Iso Valv 32 ft FB	30KLA30AA002	30UFA17095	M	H	ES	PAM	SI	S	C/NM	Y (3)		Y (5)
KLA 3 Cont Iso Solen Glob Valv 1	30KLA30AA002A	30UFA17095	M	H	ES		SI	S	C/NM	Y (3)		Y (5)
KLA 3 Cont Iso Valv 32 ft RB	30KLA30AA003	30UJA18016	H	H	ES	PAM	SI	S	C/NM		Y (4)	Y (5)
KLA 3 Cont Iso Son Glob Valv 2	30KLA30AA003A	30UJA18016	H	H	ES		SI	S	C/NM		Y (4)	Y (5)
Motor Control Dmpr 1 to FB KLL	30KLA30AA004	30UFA21065	M	H			SII	NS-AQ	C/NM	Y (3)		Y (5)
Op Fl Control Damper Sup	30KLA30AA006	30UJA29013	H	H			SII	NS-AQ	C/NM		Y (4)	Y (5)
Op Fl Motorized Control Damper Sup	30KLA30AA007	30UJA29013	H	H			SII	NS-AQ	C/NM		Y (4)	Y (5)
Motor Control Dmpr 2 to FB KLL	30KLA30AA008	30UFA21065	M	H			SII	NS-AQ	C/NM	Y (3)		Y (5)
KLA 3 Plen Sup Fire Dmpr	30KLA30AA013	30UFA17065	M	H			SII	NS-AQ	C/NM	Y (3)		Y (5)
Fire Dmpr Plen Sup to FB KLL	30KLA30AA014	30UFA17065	M	H			SII	NS-AQ	C/NM	Y (3)		Y (5)
KLA 4 Cont Iso Damp 32 ft RB	30KLA40AA001	30UJA18016	H	H	ES	PAM	SI	S	C/NM		Y (4)	Y (5)
KLA 4 Cont Iso Solen Glob Val 32 ft RB	30KLA40AA001A	30UJA18016	H	H	ES		SI	S	C/NM		Y (4)	Y (5)
KLA 4 Cont Iso Damp 32 ft FB	30KLA40AA002	30UFA17095	M	H	ES	PAM	SI	S	C/NM	Y (3)		Y (5)
KLA 4 Cont Iso Solen Glob Val 32 ft FB	30KLA40AA002A	30UFA17095	M	H	ES		SI	S	C/NM	Y (3)		Y (5)

Table 3.10-1—List of Seismically and Dynamically Qualified Mechanical and Electrical Equipment (Sheet 161 of 197)

Name Tag (Equipment Description)	Tag Number	Local Area KKS ID (Room Location)	EQ Environment (Note 1)	Radiation Environment Zone (Note 2)	EQ Designated Function (Note 3)	Safety Class (Note 4)		EQ Program Designation (Note 5)	
KLA 4 Sup Louver Damper 1	30KLA40AA003	30UJA34015	H	H	SII	NS-AQ	C/NM	Y (4)	Y (5)
KLA 4 Eq Comp Control Dmpr	30KLA40AA004	30UJA18016	H	H	SII	NS-AQ	C/NM	Y (4)	Y (5)
KLA 4 Eq Comp Iso Dmpr	30KLA40AA005	30UJA18016	H	H	SII	NS-AQ	C/NM	Y (4)	Y (5)
KLA 4 Fire Damper UFA24095	30KLA40AA006	30UFA24095	M	H	SII	NS-AQ	C/NM	Y (3)	Y (5)
KLA 4 Sup Motor Louver Damper	30KLA40AA007	30UJA34015	H	H	SII	NS-AQ	C/NM	Y (4)	Y (5)
KLA 4 Sup Louver Damper 2	30KLA40AA008	30UJA34015	H	H	SII	NS-AQ	C/NM	Y (4)	Y (5)
KLA 5 FireDamper Service Compart Supply	30KLA50AA001	30UJA29015	H	H	SI	NS-AQ	C/NM	Y (4)	Y (5)
KLA 5 Filter Train Upstream Isolation Damper	30KLA50AA002	30UJA29022	H	H	SI	NS-AQ	C/NM	Y (4)	Y (5)
KLA 5 FireDamper Service Compart Exhaust	30KLA50AA003	30UJA29015	H	H	SI	NS-AQ	C/NM	Y (4)	Y (5)
KLA 5 Filter Train Downstream Isolation Dmpr	30KLA50AA004	30UJA29022	H	H	SI	NS-AQ	C/NM	Y (4)	Y (5)
KLA 5 Electric Heater	30KLA50AH001	30UJA29022	H	H	SI	NS-AQ	C/NM	Y (4)	Y (5)
KLA 5 Train 1 Fan	30KLA50AN001	30UJA29022	H	H	SI	NS-AQ	C/NM	Y (4)	Y (5)
KLA 5 Train 2 Fan	30KLA50AN002	30UJA29022	H	H	SI	NS-AQ	C/NM	Y (4)	Y (5)
KLA 5 Prefilter	30KLA50AT001	30UJA29022	H	H	SI	NS-AQ	C/NM	Y (4)	Y (5)
KLA 5 HEPA Prefilter	30KLA50AT002	30UJA29022	H	H	SI	NS-AQ	C/NM	Y (4)	Y (5)
KLA 5 Iodine Filter	30KLA50AT003	30UJA29022	H	H	SI	NS-AQ	C/NM	Y (4)	Y (5)
KLA 5 HEPA Filter	30KLA50AT004	30UJA29022	H	H	SI	NS-AQ	C/NM	Y (4)	Y (5)
KLA 5 Balancing Dammper 1	30KLA51AA006	30UJA29022	H	H	SI	NS-AQ	C/NM	Y (4)	Y (5)
KLA 5 Check Damper 1	30KLA51AA007	30UJA29022	H	H	SI	NS-AQ	C/NM	Y (4)	Y (5)
KLA 5Balancing Dammper 2	30KLA52AA006	30UJA29022	H	H	SI	NS-AQ	C/NM	Y (4)	Y (5)
KLA 5 Check Damper 2	30KLA52AA007	30UJA29022	H	H	SI	NS-AQ	C/NM	Y (4)	Y (5)
KLA DP Sens Valve 1 SG3	30KLA60AA701	33UJH10002	M	H	SII	NS-AQ	C/NM	Y (3)	Y (5)
KLA DP Sens Valve 1 FB	30KLA60AA702	30UFA10052	M	H	SII	NS-AQ	C/NM	Y (3)	Y (5)
KLA DP Sens Valve 1 SG2	30KLA60AA703	32UJH10002	M	H	SII	NS-AQ	C/NM	Y (3)	Y (5)
KLA DP Sens Valv 2 FB	30KLA60AA704	30UFA13004	M	H	SII	NS-AQ	C/NM	Y (3)	Y (5)
KLA 6 Plenum Sup Chk Dmpr 1	30KLA65AA002	30UJA18026	H	H	SII	NS-AQ	C/NM	Y (4)	Y (5)
KLA 6 Plenum Sup Chk Dmpr 3	30KLA65AA004	30UJA18027	H	H	SII	NS-AQ	C/NM	Y (4)	Y (5)
KLA 6 Rx Pit Suppy Fan 1	30KLA65AN001	30UJA15026	H	H	SI	S	C/NM	Y (4)	Y (5)
KLA 6 Rx Pit Suppy Fan 3	30KLA65AN002	30UJA15027	H	H	SI	S	C/NM	Y (4)	Y (5)
KLA 6 Plenum Sup Chk Dmpr 2	30KLA66AA002	30UJA15026	H	H	SII	NS-AQ	C/NM	Y (4)	Y (5)
KLA 6 Plenum Sup Chk Dmpr 4	30KLA66AA004	30UJA15027	H	H	SII	NS-AQ	C/NM	Y (4)	Y (5)
KLA 6 Rx Pit Supply Fan 2	30KLA66AN001	30UJA15026	H	H	SI	S	C/NM	Y (4)	Y (5)
KLA 6 Rx Pit Supply Fan 4	30KLA66AN002	30UJA15027	H	H	SI	S	C/NM	Y (4)	Y (5)

Table 3.10-1—List of Seismically and Dynamically Qualified Mechanical and Electrical Equipment (Sheet 162 of 197)

Name Tag (Equipment Description)	Tag Number	Local Area KKS ID (Room Location)	EQ Environment (Note 1)	Radiation Environment Zone (Note 2)	EQ Designated Function (Note 3)		Safety Class (Note 4)		EQ Program Designation (Note 5)	
KLA DP Sens Valv 2 SG3	30KLA70AA701	33UJH10002	M	H		SI	S	C/NM	Y (3)	Y (5)
KLA DP Sens Valv 3 SG3	30KLA70AA702	33UJH10002	M	H		SI	S	C/NM	Y (3)	Y (5)
KLA DP Sens Valv 2 FB	30KLA70AA703	30UFA10052	M	H		SI	S	C/NM	Y (3)	Y (5)
KLA DP Sens Valv 3 FB	30KLA70AA704	30UFA10052	M	H		SI	S	C/NM	Y (3)	Y (5)
KLA DP Sens Valv 2 SG2	30KLA70AA706	32UJH10002	M	H		SI	S	C/NM	Y (3)	Y (5)
KLA DP Sens Valv 3 SG2	30KLA70AA707	32UJH10002	M	H		SI	S	C/NM	Y (3)	Y (5)
KLA DP Sens Valv 5 FB	30KLA70AA708	30UFA13004	M	H		SI	S	C/NM	Y (3)	Y (5)
KLA DP Sens Valv 4 FB	30KLA70AA709	30UFA13004	M	H		SI	S	C/NM	Y (3)	Y (5)
Annulus Ventilation System (AVS)										
Motor Operated Supply Damper (Train 21)	30KLB21AA003	30UFA17084	M	H	ES	SI	S	C/NM	Y (3)	Y (5)
Motor Operatered Exhaust Damper	30KLB21AA004	30UFA17084	M	H	ES	SI	S	C/NM	Y (3)	Y (5)
Backdraft Damper (Train 21)	30KLB21AA006	30UFA17083	M	H	ES	SI	S	C/NM	Y (3)	Y (5)
Electric Heater (Train 21)	30KLB21AH001	30UFA17084	M	H	ES	SI	S	C/NM	Y (3)	Y (5)
Exhaust Fan (Train 21)	30KLB21AN001	30UFA17083	M	H	ES	SI	S	C/NM	Y (3)	Y (5)
Pre-filter (Train 21)	30KLB21AT001	30UFA17084	M	H	ES	SI	S	C/NM	Y (3)	Y (5)
Upstream Hepa Filter (Train 21)	30KLB21AT002	30UFA17084	M	H	ES	SI	S	C/NM	Y (3)	Y (5)
Iodine Adsorber (Train 21)	30KLB21AT003	30UFA17084	M	H	ES	SI	S	C/NM	Y (3)	Y (5)
Downstream Hepa Filter (Train 21)	30KLB21AT004	30UFA17084	M	H	ES	SI	S	C/NM	Y (3)	Y (5)
Motor Operated Supply Damper (Train 24)	30KLB24AA003	30UFA17082	M	H	ES	SI	S	C/NM	Y (3)	Y (5)
Motor Operated Exhaust Damper (Train 24)	30KLB24AA004	30UFA17082	M	H	ES	SI	S	C/NM	Y (3)	Y (5)
Backdraft Damper (Train 24)	30KLB24AA006	30UFA17081	M	H	ES	SI	S	C/NM	Y (3)	Y (5)
Electric Heater (Train 24)	30KLB24AH001	30UFA17082	M	H	ES	SI	S	C/NM	Y (3)	Y (5)
Exhaust Fan (Train 24)	30KLB24AN001	30UFA17081	M	H	ES	SI	S	C/NM	Y (3)	Y (5)
Pre-filter (Train 24)	30KLB24AT001	30UFA17082	M	H	ES	SI	S	C/NM	Y (3)	Y (5)
Upstream Hepa Filter (Train 24)	30KLB24AT002	30UFA17082	M	H	ES	SI	S	C/NM	Y (3)	Y (5)
Iodine Adsorber (Train 24)	30KLB24AT003	30UFA17082	M	H	ES	SI	S	C/NM	Y (3)	Y (5)
Downstream Hepa Filter	30KLB24AT004	30UFA17082	M	H	ES	SI	S	C/NM	Y (3)	Y (5)
Supply Motor Operated Isolation Damper	30KLB34AA002	30UFA21095	M	H	ES	SI	S	C/NM	Y (3)	Y (5)
Supply Motor Operated Isolation Damper	30KLB34AA003	30UFA21095	M	H	ES	SI	S	C/NM	Y (3)	Y (5)
Exhaust Motor Operated Isolation Damper	30KLB44AA002	30UFA29054	M	H	ES	SI	S	C/NM	Y (3)	Y (5)
Exhaust Motor Operated Isolation Damper	30KLB44AA003	30UFA29054	M	H	ES	SI	S	C/NM	Y (3)	Y (5)
Safeguard Building Controlled Area Ventilation System (SBVS)										

Table 3.10-1—List of Seismically and Dynamically Qualified Mechanical and Electrical Equipment (Sheet 163 of 197)

Name Tag (Equipment Description)	Tag Number	Local Area KKS ID (Room Location)	EQ Environment (Note 1)	Radiation Environment Zone (Note 2)	EQ Designated Function (Note 3)	Safety Class (Note 4)		EQ Program Designation (Note 5)	
Fire Dmpr Sup ICP, SG1	30KLC11AA002	31UJH10004	M	H	SI	S	C/NM	Y (3)	Y (5)
Vol Cont Dmpr Sup, Div 1	30KLC11AA003	31UJH05025	M	H	SI	S	C/NM	Y (3)	Y (5)
Iso Dmpr 1 Sup, Div 1	30KLC11AA004	31UJH05025	M	H	SI	S	C/NM	Y (3)	Y (5)
Iso Dmpr 2 Sup, Div 1	30KLC11AA005	31UJH05025	M	H	SI	S	C/NM	Y (3)	Y (5)
Sup Is Dmpr, Div 1, SG1	30KLC11AA007	31UJH05006	M	H	SI	S	C/NM	Y (3)	Y (5)
Sup Dmpr KAA Vlv Rm, Anteroom, SG1	30KLC11AA008	31UJH10004	M	H	SI	S	C/NM	Y (3)	Y (5)
Fire Dmpr ICP 1, SG2	30KLC12AA002	32UJH10003	M	H	SI	S	C/NM	Y (3)	Y (5)
Vol Cont Dmpr Sup, Div 2	30KLC12AA003	32UJH01020	M	H	SI	S	C/NM	Y (3)	Y (5)
Sup Iso Dmpr 1, Div 2	30KLC12AA004	32UJH01020	M	H	SI	S	C/NM	Y (3)	Y (5)
Sup Iso Dmpr 2, Div 2	30KLC12AA005	32UJH01020	M	H	SI	S	C/NM	Y (3)	Y (5)
Fire Dmpr 2 Sup, Div 2	30KLC12AA008	32UJH01001	M	H	SI	S	C/NM	Y (3)	Y (5)
Sup Iso Dmpr 1, Air Lock, SG2	30KLC12AA009	32UJH10006	M	H	SI	S	C/NM	Y (3)	Y (5)
Sup Iso Dmpr 2, Air Lock, SG2	30KLC12AA010	32UJH10006	M	H	SI	S	C/NM	Y (3)	Y (5)
Sup Fire Dmpr, ICP, SG3	30KLC13AA002	33UJH10003	M	H	SI	S	C/NM	Y (3)	Y (5)
Vol Cont Dmpr Sup, Div 3	30KLC13AA003	33UJH01020	M	H	SI	S	C/NM	Y (3)	Y (5)
Sup Iso Dmpr 1, Div 3	30KLC13AA004	33UJH01020	M	H	SI	S	C/NM	Y (3)	Y (5)
Sup Iso Dmpr 2, Div 3	30KLC13AA005	33UJH01020	M	H	SI	S	C/NM	Y (3)	Y (5)
Sup Fire Dmpr, Staircase, Div 3	30KLC13AA008	33UJH01001	M	H	SI	S	C/NM	Y (3)	Y (5)
Sup Fire Dmpr 1, ICP, SG4	30KLC14AA002	34UJH10002	M	H	SI	S	C/NM	Y (3)	Y (5)
Vol Cont Dmpr Sup, Div 4	30KLC14AA003	34UJH05025	M	H	SI	S	C/NM	Y (3)	Y (5)
Sup Iso Dmpr 1, Div 4	30KLC14AA004	34UJH05025	M	H	SI	S	C/NM	Y (3)	Y (5)
Sup Iso Dmpr 2, Div 4	30KLC14AA005	34UJH05025	M	H	SI	S	C/NM	Y (3)	Y (5)
Sup Iso Dmpr, Div 4	30KLC14AA007	34UJH05006	M	H	SI	S	C/NM	Y (3)	Y (5)
Fire Dmpr Exh ICP, SG1	30KLC21AA001	31UJH10011	M	H	SI	S	C/NM	Y (3)	Y (5)
Ext Dmpr, KAA Vlv Rm, Anteroom, SG1	30KLC21AA002	31UJH10004	M	H	SI	S	C/NM	Y(3)	Y(5)
Exh Iso Dmpr, SG1	30KLC21AA005	31UJH10004	M	H	SI	S	C/NM	Y (3)	Y (5)
Oper Ex Vol Cntrl Dmpr, Div 1	30KLC21AA006	31UJH10010	M	H	SI	S	C/NM	Y (3)	Y (5)
Oper Ex Iso Dmpr 1, Div 1	30KLC21AA007	31UJH10010	M	H	SI	S	C/NM	Y (3)	Y (5)
Oper Ex Iso Dmpr 2, Div 1	30KLC21AA008	31UJH10010	M	H	SI	S	C/NM	Y (3)	Y (5)
Oper Ex Fire Dmpr, Div 1	30KLC21AA009	31UJH10004	M	H	SI	S	C/NM	Y (3)	Y (5)
Exh Iso Dmpr, SG1	30KLC21AA010	31UJH10004	M	H	SI	S	C/NM	Y (3)	Y (5)
Fire Dmpr ICP 2, SG2	30KLC22AA001	32UJH10003	M	H	SI	S	C/NM	Y (3)	Y (5)
Oper Ex Vol Cntrl Dmpr, Div 2	30KLC22AA006	32UJH10002	M	H	SI	S	C/NM	Y (3)	Y (5)

Table 3.10-1—List of Seismically and Dynamically Qualified Mechanical and Electrical Equipment (Sheet 164 of 197)

Name Tag (Equipment Description)	Tag Number	Local Area KKS ID (Room Location)	EQ Environment (Note 1)	Radiation Environment Zone (Note 2)	EQ Designated Function (Note 3)	Safety Class (Note 4)		EQ Program Designation (Note 5)	
Oper Ex Iso Dmpr 1, Div 2	30KLC22AA007	32UJH10002	M	H	SI	S	C/NM	Y (3)	Y (5)
Oper Ex Iso Dmpr 2, Div 2	30KLC22AA008	32UJH10002	M	H	SI	S	C/NM	Y (3)	Y (5)
Oper Ex Iso Dmpr 2, Div 2	30KLC22AA009	32UJH10002	M	H	SI	S	C/NM	Y (3)	Y (5)
Exh Iso Dmpr, Air Lock, SG2	30KLC22AA010	32UJH10006	M	H	SI	S	C/NM	Y (3)	Y (5)
Stairwell Fire Dmpr 1, SG2	30KLC22AA011	32UJH05001	M	H	SI	S	C/NM	Y (3)	Y (5)
Exh Fire Dmpr, ICP, SG3	30KLC23AA001	33UJH10003	M	H	SI	S	C/NM	Y (3)	Y (5)
Oper Ex Vol Cntrl Dmpr, Div 3	30KLC23AA006	33UJH10002	M	H	SI	S	C/NM	Y (3)	Y (5)
Oper Ex Iso Dmpr 1, Div 3	30KLC23AA007	33UJH10002	M	H	SI	S	C/NM	Y (3)	Y (5)
Oper Ex Iso Dmpr 2, Div 3	30KLC23AA008	33UJH10002	M	H	SI	S	C/NM	Y (3)	Y (5)
Oper Ex Fire Dmpr, Div 3	30KLC23AA009	33UJH10002	M	H	SI	S	C/NM	Y (3)	Y (5)
Stairwell Fire Dmpr 1, SG3	30KLC23AA011	33UJH05001	M	H	SI	S	C/NM	Y (3)	Y (5)
Sup Fire Dmpr 2, ICP, SG4	30KLC24AA001	34UJH10011	M	H	SI	S	C/NM	Y (3)	Y (5)
Sup Iso Dmpr, JMU Rm, SG4	30KLC24AA002	34UJH10004	M	H	SI	S	C/NM	Y (3)	Y (5)
Sup Iso Dmpr, Anteroom, Div 4	30KLC24AA003	34UJH05006	M	H	SI	S	C/NM	Y (3)	Y (5)
Sup Iso Dmpr, Anteroom, Div 4	30KLC24AA004	34UJH01011	M	H	SI	S	C/NM	Y (3)	Y (5)
Exh Iso Dmpr, Div 4	30KLC24AA005	34UJH10004	M	H	SI	S	C/NM	Y (3)	Y (5)
Oper Ex Vol Cntrl Dmpr, Div 4	30KLC24AA006	34UJH10010	M	H	SI	S	C/NM	Y (3)	Y (5)
Oper Ex Iso Dmpr 1, Div 4	30KLC24AA007	34UJH10010	M	H	SI	S	C/NM	Y (3)	Y (5)
Oper Ex Iso Dmpr 2, Div 4	30KLC24AA008	34UJH10010	M	H	SI	S	C/NM	Y (3)	Y (5)
Oper Ex Fire Dmpr, Div 4	30KLC24AA009	34UJH10004	M	H	SI	S	C/NM	Y (3)	Y (5)
Oper Ex Iso Dmpr 2, Div 4	30KLC24AA010	34UJH10004	M	H	SI	S	C/NM	Y (3)	Y (5)
Acc Ex Iso Dmpr Vlv Rm, Div 1	30KLC31AA001	31UJH10004	M	H	SI	S	C/NM	Y (3)	Y (5)
Acc Ex Fire Dmpr Vlv Rm, Div 1	30KLC31AA002	31UJH10004	M	H	SI	S	C/NM	Y (3)	Y (5)
Acc Ex Iso Dmpr Vlv Rm, Div 1	30KLC31AA003	31UJH10004	M	H	SI	S	C/NM	Y (3)	Y (5)
Acc Ex Iso Dmpr Vlv Rm, Div 2	30KLC32AA001	32UJH10002	M	H	SI	S	C/NM	Y (3)	Y (5)
Acc Ex Fire Dmpr Vlv Rm, Div 2	30KLC32AA002	32UJH10002	M	H	SI	S	C/NM	Y (3)	Y (5)
Acc Ex Iso Dmpr Vlv Rm, Div 2	30KLC32AA003	32UJH10002	M	H	SI	S	C/NM	Y (3)	Y (5)
Acc Ex Iso Dmpr Vlv Rm, Div 3	30KLC33AA001	33UJH10002	M	H	SI	S	C/NM	Y (3)	Y (5)
Acc Ex Fire Dmpr Vlv Rm, Div 3	30KLC33AA002	33UJH10002	M	H	SI	S	C/NM	Y (3)	Y (5)
Acc Ex Iso Dmpr Vlv Rm, Div 3	30KLC33AA003	33UJH10002	M	H	SI	S	C/NM	Y (3)	Y (5)
Acc Ex Iso Dmpr Vlv Rm, Div 4	30KLC34AA001	34UJH10004	M	H	SI	S	C/NM	Y (3)	Y (5)
Acc Ex Fire Dmpr Vlv Rm, Div 4	30KLC34AA002	34UJH10004	M	H	SI	S	C/NM	Y (3)	Y (5)
Acc Ex Iso Dmpr Vlv Rm, Div 4	30KLC34AA003	34UJH10004	M	H	SI	S	C/NM	Y (3)	Y (5)

Table 3.10-1—List of Seismically and Dynamically Qualified Mechanical and Electrical Equipment (Sheet 165 of 197)

Name Tag (Equipment Description)	Tag Number	Local Area KKS ID (Room Location)	EQ Environment (Note 1)	Radiation Environment Zone (Note 2)	EQ Designated Function (Note 3)	Safety Class (Note 4)		EQ Program Designation (Note 5)	
Iso Dmpr 1, Acc Ex Tr 1	30KLC41AA001	30UFA21082	M	H	SI	S	C/NM	Y (3)	Y (5)
Iso Dmpr 2, Acc Ex Tr 1	30KLC41AA002	30UFA21082	M	H	SI	S	C/NM	Y (3)	Y (5)
Check Dmpr, Acc Ex Tr 1	30KLC41AA003	30UFA21083	M	H	SI	S	C/NM	Y (3)	Y (5)
Elec Air Preheater, Accident Filt Tr 1	30KLC41AH001	30UFA21082	M	H	SI	S	C/NM	Y (3)	Y (5)
Exhaust Fan, Accident Filtr Tr 1	30KLC41AN001	30UFA21083	M	H	SI	S	C/NM	Y (3)	Y (5)
Prefilter/moisture Separator, Accident Filtr Tr 1	30KLC41AT001	30UFA21082	M	H	SI	S	C/NM	Y (3)	Y (5)
HEPA Prefilter, Accident Filtr Tr 1	30KLC41AT002	30UFA21082	M	H	SI	S	C/NM	Y (3)	Y (5)
Iodine Filter, Accident Filtr Tr 1	30KLC41AT003	30UFA21082	M	H	SI	S	C/NM	Y (3)	Y (5)
HEPA Postfilter, Accident Filtr Tr 1	30KLC41AT004	30UFA21082	M	H	SI	S	C/NM	Y (3)	Y (5)
Iso Dmpr 1, Acc Ex Tr 2	30KLC42AA001	30UFA21084	M	H	SI	S	C/NM	Y (3)	Y (5)
Iso Dmpr 2, Acc Ex Tr 2	30KLC42AA002	30UFA21084	M	H	SI	S	C/NM	Y (3)	Y (5)
Check Dmpr, Acc Ex Tr 2	30KLC42AA003	30UFA21083	M	H	SI	S	C/NM	Y (3)	Y (5)
Elec Air Preheater, Accident Filt Tr 2	30KLC42AH001	30UFA21084	M	H	SI	S	C/NM	Y (3)	Y (5)
Exhaust Fan, Accident Filtr Tr 2	30KLC42AN001	30UFA21081	M	H	SI	S	C/NM	Y (3)	Y (5)
Prefilter/moisture Separator, Accident Filtr Tr 2	30KLC42AT001	30UFA21084	M	H	SI	S	C/NM	Y (3)	Y (5)
HEPA Prefilter, Accident Filtr Tr 2	30KLC42AT002	30UFA21084	M	H	SI	S	C/NM	Y (3)	Y (5)
Iodine Filter, Accident Filtr Tr 2	30KLC42AT003	30UFA21084	M	H	SI	S	C/NM	Y (3)	Y (5)
HEPA Postfilter, Accident Filtr Tr 2	30KLC42AT004	30UFA21084	M	H	SI	S	C/NM	Y (3)	Y (5)
Acc Ex Sw Iso Dmpr 1	30KLC45AA001	30UFA21095	M	H	SI	S	C/NM	Y (3)	Y (5)
Acc Ex Sw Iso Dmpr 2	30KLC45AA002	30UFA21095	M	H	SI	S	C/NM	Y (3)	Y (5)
Acc Ex Sw Iso Dmpr 3	30KLC45AA003	30UFA29045	M	H	SI	S	C/NM	Y (3)	Y (5)
Acc Ex Sw Iso Dmpr 4	30KLC45AA004	30UFA29045	M	H	SI	S	C/NM	Y (3)	Y (5)
Acc Ex Sw Iso Dmpr 5	30KLC45AA005	30UFA24045	M	H	SI	S	C/NM	Y (3)	Y (5)
Acc Ex Sw Iso Dmpr 6	30KLC45AA006	30UFA24045	M	H	SI	S	C/NM	Y (3)	Y (5)
Chiller Recirc Unit, KLC SG1	30KLC51AC001	31UJH05004	M	H	SI	S	C/NM	Y (3)	Y (5)
Chiller Recirc Unit, KAA Vlv Rm, SG1	30KLC51AC002	31UJH10004	M	H	SI	S	C/NM	Y (3)	Y (5)
Chiller Recirc Unit, JMU Rm, SG1	30KLC51AC003	31UJH10010	M	H	SI	S	C/NM	Y (3)	Y (5)
Fan Recirc Unit, KLC SG1	30KLC51AN001	31UJH05004	M	H	SI	S	C/NM	Y (3)	Y (5)
Fan Recirc Unit, KAA Vlv Rm, SG1	30KLC51AN002	31UJH10004	M	H	SI	S	C/NM	Y (3)	Y (5)
Fan Recirc Unit, JMU Rm, SG1	30KLC51AN003	31UJH10010	M	H	SI	S	C/NM	Y (3)	Y (5)
Sep Recirc Unit, KLC SG1	30KLC51AT001	31UJH05004	M	H	SI	S	C/NM	Y (3)	Y (5)
Sep Recirc Unit, KAA Vlv Rm, SG1	30KLC51AT002	31UJH10004	M	H	SI	S	C/NM	Y (3)	Y (5)
Sep Recirc Unit, JMU Rm, SG1	30KLC51AT003	31UJH10010	M	H	SI	S	C/NM	Y (3)	Y (5)

Table 3.10-1—List of Seismically and Dynamically Qualified Mechanical and Electrical Equipment (Sheet 166 of 197)

Name Tag (Equipment Description)	Tag Number	Local Area KKS ID (Room Location)	EQ Environment (Note 1)	Radiation Environment Zone (Note 2)	EQ Designated Function (Note 3)	Safety Class (Note 4)		EQ Program Designation (Note 5)	
Chiller Recirc Unit, KLC SG2	30KLC52AC001	32UJH05002	M	H	SI	S	C/NM	Y (3)	Y (5)
Chiller Recirc Unit, Vlv Rm, KLC SG2	30KLC52AC002	32UJH10002	M	H	SI	S	C/NM	Y (3)	Y (5)
Fan Recirc Unit, KLC SG2	30KLC52AN001	32UJH05002	M	H	SI	S	C/NM	Y (3)	Y (5)
Fan Recirc Unit, Vlv Rm, KLC SG2	30KLC52AN002	32UJH10002	M	H	SI	S	C/NM	Y (3)	Y (5)
Sep Recirc Unit, Vlv Rm, KLC SG2	30KLC52AT001	32UJH05002	M	H	SI	S	C/NM	Y (3)	Y (5)
Sep Recirc Unit, Vlv Rm, KLC SG2	30KLC52AT002	32UJH10002	M	H	SI	S	C/NM	Y (3)	Y (5)
Chiller Recirc Unit, KLC SG3	30KLC53AC001	33UJH05002	M	H	SI	S	C/NM	Y (3)	Y (5)
Chiller Recirc Unit, Vlv Rm, KLC SG3	30KLC53AC002	33UJH10002	M	H	SI	S	C/NM	Y (3)	Y (5)
Fan Recirc Unit, KLC SG3	30KLC53AN001	33UJH05002	M	H	SI	S	C/NM	Y (3)	Y (5)
Fan Recirc Unit, Vlv Rm, KLC SG3	30KLC53AN002	33UJH10002	M	H	SI	S	C/NM	Y (3)	Y (5)
Sep Recirc Unit, Vlv Rm, KLC SG3	30KLC53AT001	33UJH05002	M	H	SI	S	C/NM	Y (3)	Y (5)
Sep Recirc Unit, Vlv Rm, KLC SG3	30KLC53AT002	33UJH10002	M	H	SI	S	C/NM	Y (3)	Y (5)
Chiller Recirc Unit, KLC SG4	30KLC54AC001	34UJH05004	M	H	SI	S	C/NM	Y (3)	Y (5)
Chiller Recirc Unit, KAA vlv rm, SG4	30KLC54AC002	34UJH10004	M	H	SI	S	C/NM	Y (3)	Y (5)
Chiller Recirc Unit, JMU Rm, SG4	30KLC54AC003	34UJH10010	M	H	SI	S	C/NM	Y (3)	Y (5)
Fan Recirc Unit, KLC SG4	30KLC54AN001	34UJH05004	M	H	SI	S	C/NM	Y (3)	Y (5)
Fan Recirc Unit, KAA Vlv Rm, SG4	30KLC54AN002	34UJH10004	M	H	SI	S	C/NM	Y (3)	Y (5)
Fan Recirc Unit, JMU Rm, SG4	30KLC54AN003	34UJH10010	M	H	SI	S	C/NM	Y (3)	Y (5)
Sep Recirc Unit, KLC SG4	30KLC54AT001	34UJH05004	M	H	SI	S	C/NM	Y (3)	Y (5)
Sep Recirc Unit, KAA Vlv Rm, SG4	30KLC54AT002	34UJH10004	M	H	SI	S	C/NM	Y (3)	Y (5)
Electrical Division of Safeguard Building Ventilation System (SBVSE)									
Outside Air Isolation Damper	30SAC01AA002	31UJK22026	M	M	SI	S	C/NM		Y (5)
Outside Air Control Damper	30SAC01AA003	31UJK22026	M	M	SI	S	C/NM		Y (5)
Recirc Air Control Damper	30SAC01AA004	31UJK22028	M	M	SI	S	C/NM		Y (5)
Supply Air Backdraft Damper	30SAC01AA005	31UJK22026	M	M	SI	S	C/NM		Y (5)
Supply Air Cooler	30SAC01AC001	31UJK22026	M	M	SI	S			Y (5)
Supply Air Heater	30SAC01AH002	31UJK22026	M	M	SI	S	C/NM		Y (5)
Humidifier Heater	30SAC01AH003	31UJK22026	M	M	SII	NS-AQ			Y (5)
Humidifier Heater	30SAC01AH004	31UJK22026	M	M	SII	NS-AQ			Y (5)
Fan Motor Heater	30SAC01AH501	31UJK22026	M	M	SI	S	C/NM		Y (5)
Supply Air Fan	30SAC01AN001	31UJK22026	M	M	SI	S	C/NM		Y (5)
Air Inlet Outside Air	30SAC01AT001	31UJK22026	M	M	SI	S			Y (5)
Insect Screen Supply Air	30SAC01AT003	31UJK22026	M	M	SI	S			Y (5)

Table 3.10-1—List of Seismically and Dynamically Qualified Mechanical and Electrical Equipment (Sheet 167 of 197)

Name Tag (Equipment Description)	Tag Number	Local Area KKS ID (Room Location)	EQ Environment (Note 1)	Radiation Environment Zone (Note 2)	EQ Designated Function (Note 3)	Safety Class (Note 4)		EQ Program Designation (Note 5)
Supply Air Pre Filter	30SAC01AT004	31UJK22026	M	M	SI	S	C/NM	Y (5)
Supply Air Roughing Filter	30SAC01AT005	31UJK22026	M	M	SI	S	C/NM	Y (5)
Moisture Separator Supply Air Cooler	30SAC01AT006	31UJK22026	M	M	SI	S		Y (5)
Supply Air Humidifier	30SAC01AT007	31UJK22026	M	M	SII	NS-AQ		Y (5)
Supply Air Humidifier	30SAC01AT008	31UJK22026	M	M	SII	NS-AQ		Y (5)
Supply Air Silencer	30SAC01BS001	31UJK22026	M	M	SI	S		Y (5)
Supply Air Silencer	30SAC01BS002	31UJK22026	M	M	SI	S		Y (5)
Recirc Air Silencer	30SAC01BS003	31UJK22039	M	M	SI	S		Y (5)
Outside Air Isolation Damper	30SAC02AA002	32UJK34005	M	M	SI	S	C/NM	Y (5)
Outside Air Control Damper	30SAC02AA003	32UJK34005	M	M	SI	S	C/NM	Y (5)
Recirc Air Control Damper	30SAC02AA004	32UJK31032	M	M	SI	S	C/NM	Y (5)
Supply Air Backdraft Damper	30SAC02AA005	32UJK31007	M	M	SI	S	C/NM	Y (5)
Supply Air Cooler	30SAC02AC001	32UJK34009	M	M	SI	S		Y (5)
Supply Air Heater	30SAC02AH002	32UJK34008	M	M	SI	S	C/NM	Y (5)
Humidifier Heater	30SAC02AH003	32UJK31005	M	M	SII	NS-AQ	C/NM	Y (5)
Humidifier Heater	30SAC02AH004	32UJK31005	M	M	SII	NS-AQ	C/NM	Y (5)
Fan Motor Heater	30SAC02AH501	32UJK31007	M	M	SI	S	C/NM	Y (5)
Supply Air Fan	30SAC02AN001	32UJK31007	M	M	SI	S	C/NM	Y (5)
Air Inlet Outside Air	30SAC02AT001	32UJK38006	M	M	SI	S		Y (5)
Insect Screen Supply Air	30SAC02AT003	32UJK38006	M	M	SI	S		Y (5)
Supply Air Pre Filter	30SAC02AT004	32UJK34006	M	M	SI	S	C/NM	Y (5)
Supply Air Roughing Filter	30SAC02AT005	32UJK34007	M	M	SI	S	C/NM	Y (5)
Moisture Separator Supply Air Cooler	30SAC02AT006	32UJK34009	M	M	SI	S		Y (5)
Supply Air Humidifier	30SAC02AT007	32UJK31005	M	M	SII	NS-AQ		Y (5)
Supply Air Humidifier	30SAC02AT008	32UJK31005	M	M	SII	NS-AQ		Y (5)
Air Inlet Outside Air	30SAC02AT010	32UJK38006	M	M	SI	S		Y (5)
Supply Air Silencer	30SAC02BS001	32UJK31007	M	M	SI	S		Y (5)
Supply Air Silencer	30SAC02BS002	32UJK31007	M	M	SI	S		Y (5)
Recirc Air Silencer	30SAC02BS003	32UJK31032	M	M	SI	S		Y (5)
Outside Air Isolation Damper	30SAC03AA002	33UJK34005	M	M	SI	S	C/NM	Y (5)
Outside Air Control Damper	30SAC03AA003	33UJK34005	M	M	SI	S	C/NM	Y (5)
Recirc Air Control Damper	30SAC03AA004	33UJK31032	M	M	SI	S	C/NM	Y (5)
Supply Air Backdraft Damper	30SAC03AA005	33UJK31007	M	M	SI	S	C/NM	Y (5)

Table 3.10-1—List of Seismically and Dynamically Qualified Mechanical and Electrical Equipment (Sheet 168 of 197)

Name Tag (Equipment Description)	Tag Number	Local Area KKS ID (Room Location)	EQ Environment (Note 1)	Radiation Environment Zone (Note 2)	EQ Designated Function (Note 3)	Safety Class (Note 4)		EQ Program Designation (Note 5)
Supply Air Cooler	30SAC03AC001	33UJK34009	M	M	SI	S		Y (5)
Supply Air Heater	30SAC03AH002	33UJK34008	M	M	SI	S	C/NM	Y (5)
Humidifier Heater	30SAC03AH003	33UJK31005	M	M	SII	NS-AS	C/NM	Y (5)
Humidifier Heater	30SAC03AH004	33UJK31005	M	M	SII	NS-AQ	C/NM	Y (5)
Fan Motor Heater	30SAC03AH501	33UJK31007	M	M	SI	S	C/NM	Y (5)
Supply Air Fan	30SAC03AN001	33UJK31007	M	M	SI	S	C/NM	Y (5)
Air Inlet Outside Air	30SAC03AT001	33UJK38006	M	M	SI	S		Y (5)
Insect Screen Supply Air	30SAC03AT003	33UJK38006	M	M	SI	S		Y (5)
Supply Air Pre Filter	30SAC03AT004	33UJK34006	M	M	SI	S	C/NM	Y (5)
Supply Air Roughing Filter	30SAC03AT005	33UJK34007	M	M	SI	S	C/NM	Y (5)
Moisture Separator Supply Air Cooler	30SAC03AT006	33UJK34009	M	M	SI	S		Y (5)
Supply Air Humidifier	30SAC03AT008	33UJK31005	M	M	SII	NS-AQ		Y (5)
Supply Air Silencer	30SAC03BS001	33UJK31007	M	M	SI	S		Y (5)
Supply Air Silencer	30SAC03BS002	33UJK31007	M	M	SI	S		Y (5)
Recirc Air Silencer	30SAC03BS003	33UJK31032	M	M	SI	S		Y (5)
Outside Air Isolation Damper	30SAC04AA002	34UJK22026	M	M	SI	S	C/NM	Y (5)
Outside Air Control Damper	30SAC04AA003	34UJK22026	M	M	SI	S	C/NM	Y (5)
Recirc Air Control Damper	30SAC04AA004	34UJK22028	M	M	SI	S	C/NM	Y (5)
Supply Air Backdraft Damper	30SAC04AA005	34UJK22026	M	M	SI	S	C/NM	Y (5)
Supply Air Cooler	30SAC04AC001	34UJK22026	M	M	SI	S		Y (5)
Supply Air Heater	30SAC04AH002	34UJK22026	M	M	SI	S	C/NM	Y (5)
Humidifier Heater	30SAC04AH003	34UJK22026	M	M	SII	NS-AQ		Y (5)
Humidifier Heater	30SAC04AH004	34UJK22026	M	M	SII	NS-AQ		Y (5)
Fan Motor Heater	30SAC04AH501	34UJK22026	M	M	SI	S	C/NM	Y (5)
Supply Air Fan	30SAC04AN001	34UJK22026	M	M	SI	S	C/NM	Y (5)
Air Inlet Outide Air	30SAC04AT001	34UJK22026	M	M	SI	S		Y (5)
Insect Screen Supply Air	30SAC04AT003	34UJK22026	M	M	SI	S		Y (5)
Supply Air Pre Filter	30SAC04AT004	34UJK22026	M	M	SI	S	C/NM	Y (5)
Supply Air Roughing Filter	30SAC04AT005	34UJK22026	M	M	SI	S	C/NM	Y (5)
Moisture Separator Supply Air Cooler	30SAC04AT006	34UJK22026	M	M	SI	S		Y (5)
Supply Air Humidifier	30SAC04AT007	34UJK22026	M	M	SII	NS-AQ		Y (5)
Supply Air Humidifier	30SAC04AT008	34UJK22026	M	M	SII	NS-AQ		Y (5)
Supply Air Silencer	30SAC04BS001	34UJK22026	M	M	SI	S		Y (5)

Table 3.10-1—List of Seismically and Dynamically Qualified Mechanical and Electrical Equipment (Sheet 169 of 197)

Name Tag (Equipment Description)	Tag Number	Local Area KKS ID (Room Location)	EQ Environment (Note 1)	Radiation Environment Zone (Note 2)	EQ Designated Function (Note 3)	Safety Class (Note 4)		EQ Program Designation (Note 5)
Supply Air Silencer	30SAC04BS002	34UJK22026	M	M	SI	S		Y (5)
Recirc Air Silencer	30SAC04BS003	34UJK22039	M	M	SI	S		Y (5)
Isolation Damper	30SAC05AA002	31UJK22026	M	M	SI	S	C/NM	Y(5)
Isolation Damper	30SAC08AA002	31UKJ22026	M	M	SI	S	C/NM	Y(5)
Supply Air Isolation Damper	30SAC11AA001	31UJK22024	M	M	SI	S	C/NM	Y (5)
Supply Air Isolation Damper	30SAC11AA003	31UJK22024	M	M	SI	S	C/NM	Y (5)
Supply Air Adjustable Damper	30SAC11AA004	31UJK22026	M	M	SI	S	C/NM	Y (5)
Supply Air Adjustable Damper	30SAC11AA005	31UJK22026	M	M	SI	S	C/NM	Y (5)
Supply Air Adjustable Damper	30SAC11AA006	31UJK22024	M	M	SI	S	C/NM	Y (5)
Supply Air Adjustable Damper	30SAC11AA007	31UJK22024	M	M	SI	S	C/NM	Y (5)
Fire Damper	30SAC11AA008	31UJK22024	M	M	SI	S		Y (5)
Fire Damper	30SAC11AA009	31UJK31027	M	M	SI	S		Y (5)
Fire Damper	30SAC11AA010	31UJK34024	M	M	SI	S		Y (5)
Fire Damper	30SAC11AA011	31UJK18033	M	M	SI	S		Y (5)
Fire Damper	30SAC11AA012	31UJK18033	M	M	SI	S		Y (5)
Supply Air Adjustable Damper	30SAC11AA013	31UJK18026	M	M	SI	S	C/NM	Y (5)
Supply Air Adjustable Damper	30SAC11AA014	31UJK18026	M	M	SI	S	C/NM	Y (5)
Fire Damper	30SAC11AA015	31UJK18033	M	M	SI	S		Y (5)
Fire Damper	30SAC11AA016	31UJK18022	M	M	SI	S		Y (5)
Fire Damper	30SAC11AA017	31UJK18022	M	M	SI	S		Y (5)
Supply Air Adjustable Damper	30SAC11AA018	31UJK18027	M	M	SI	S	C/NM	Y (5)
Fire Damper	30SAC11AA019	31UJK18024	M	M	SI	S		Y (5)
Supply Air Adjustable Damper	30SAC11AA020	31UJK18027	M	M	SI	S	C/NM	Y (5)
Fire Damper	30SAC11AA021	31UJK18027	M	M	SI	S		Y (5)
Fire Damper	30SAC11AA022	31UJK14033	M	M	SI	S		Y (5)
Supply Air Adjustable Damper	30SAC11AA023	31UJK14025	M	M	SI	S	C/NM	Y (5)
Fire Damper	30SAC11AA024	31UJK14022	M	M	SI	S		Y (5)
Supply Air Adjustable Damper	30SAC11AA025	31UJK14026	M	M	SI	S	C/NM	Y (5)
Fire Damper	30SAC11AA027	31UJK14026	M	M	SI	S		Y (5)
Fire Damper	30SAC11AA028	31UJK14021	M	M	SI	S		Y (5)
Fire Damper	30SAC11AA029	31UJK14026	M	M	SI	S		Y (5)
Supply Air Adjustable Damper	30SAC11AA030	31UJK18027	M	M	SI	S	C/NM	Y (5)
Supply Air Adjustable Damper	30SAC11AA031	31UJK18027	M	M	SI	S	C/NM	Y (5)

Table 3.10-1—List of Seismically and Dynamically Qualified Mechanical and Electrical Equipment (Sheet 170 of 197)

Name Tag (Equipment Description)	Tag Number	Local Area KKS ID (Room Location)	EQ Environment (Note 1)	Radiation Environment Zone (Note 2)	EQ Designated Function (Note 3)	Safety Class (Note 4)		EQ Program Designation (Note 5)
Battery Room Supply Air Heater	30SAC11AH001	31UJK18027	M	M	SI	S	C/NM	Y (5)
Battery Room Supply Air Heater	30SAC11AH002	31UJK14026	M	M	SI	S	C/NM	Y (5)
Toilet Supply Air Heater	30SAC11AH003	31UJK26021	M	M	SI	S	C/NM	Y (5)
Supply Air Isolation Damper	30SAC12AA001	32UJK31005	M	M	SI	S	C/NM	Y (5)
Maintenance Supply Air Isol Damper	30SAC12AA005	32UJK31018	M	M	SI	S	C/NM	Y (5)
Supply Air Adjustable Damper	30SAC12AA006	32UJK31018	M	M	SI	S	C/NM	Y (5)
Supply Air Adjustable Damper	30SAC12AA008	32UJK31020	M	M	SI	S	C/NM	Y (5)
Supply Air Adjustable Damper	30SAC12AA009	32UJK31020	M	M	SI	S	C/NM	Y (5)
Fire Damper	30SAC12AA010	32UJK31020	M	M	SI	S		Y (5)
Fire Damper	30SAC12AA011	32UJK31020	M	M	SI	S		Y (5)
Fire Damper	30SAC12AA012	32UJK31021	M	M	SI	S		Y (5)
Fire Damper	30SAC12AA013	32UJK22002	M	M	SI	S		Y (5)
Supply Air Adjustable Damper	30SAC12AA014	32UJK22002	M	M	SI	S	C/NM	Y (5)
Fire Damper	30SAC12AA015	32UJK22004	M	M	SI	S		Y (5)
Fire Damper	30SAC12AA016	32UJK22004	M	M	SI	S		Y (5)
Fire Damper	30SAC12AA017	32UJK22029	M	M	SI	S		Y (5)
Fire Damper	30SAC12AA018	32UJK22028	M	M	SI	S		Y (5)
Supply Air Div 3 Control Damper	30SAC12AA020	32UJK22004	M	M	SI	S	C/NM	Y (5)
Fire Damper	30SAC12AA021	33UJK22030	M	M	SI	S		Y (5)
Fire Damper	30SAC12AA022	32UJK18004	M	M	SI	S		Y (5)
Fire Damper	30SAC12AA023	32UJK18004	M	M	SI	S		Y (5)
Fire Damper	30SAC12AA024	32UJK18002	M	M	SI	S		Y (5)
Supply Air Adjustable Damper	30SAC12AA025	32UJK18004	M	M	SI	S	C/NM	Y (5)
Fire Damper	30SAC12AA026	32UJK18004	M	M	SI	S		Y (5)
Supply Air Adjustable Damper	30SAC12AA027	32UJK18004	M	M	SI	S	C/NM	Y (5)
Supply Air Adjustable Damper	30SAC12AA028	32UJK18004	M	M	SI	S	C/NM	Y (5)
Supply Air Adjustable Damper	30SAC12AA029	32UJK18002	M	M	SI	S	C/NM	Y (5)
Fire Damper	30SAC12AA030	32UJK14002	M	M	SI	S		Y (5)
Supply Air Adjustable Damper	30SAC12AA031	32UJK14002	M	M	SI	S	C/NM	Y (5)
Fire Damper	30SAC12AA032	32UJK14040	M	M	SI	S		Y (5)
Fire Damper	30SAC12AA033	32UJK14040	M	M	SI	S		Y (5)
Fire Damper	30SAC12AA034	32UJK14001	M	M	SI	S		Y (5)
Fire Damper	30SAC12AA035	32UJK18005	M	M	SI	S		Y (5)

Table 3.10-1—List of Seismically and Dynamically Qualified Mechanical and Electrical Equipment (Sheet 171 of 197)

Name Tag (Equipment Description)	Tag Number	Local Area KKS ID (Room Location)	EQ Environment (Note 1)	Radiation Environment Zone (Note 2)	EQ Designated Function (Note 3)	Safety Class (Note 4)		EQ Program Designation (Note 5)
Fire Damper	30SAC12AA036	32UJK22004	M	M	SI	S		Y (5)
Battery Room Supply Air Heater	30SAC12AH001	32UJK22028	M	M	SI	S	C/NM	Y (5)
Supply Air Isolation Damper	30SAC13AA001	33UJK31018	M	M	SI	S	C/NM	Y (5)
Maintenance Supply Air Isol Damper	30SAC13AA005	33UJK31041	M	M	SI	S	C/NM	Y (5)
Supply Air Adjustable Damper	30SAC13AA006	33UJK31018	M	M	SI	S	C/NM	Y (5)
Supply Air Adjustable Damper	30SAC13AA008	33UJK31020	M	M	SI	S	C/NM	Y (5)
Supply Air Adjustable Damper	30SAC13AA009	33UJK31020	M	M	SI	S	C/NM	Y (5)
Fire Damper	30SAC13AA010	33UJK31020	M	M	SI	S		Y (5)
Fire Damper	30SAC13AA011	33UJK31020	M	M	SI	S		Y (5)
Fire Damper	30SAC13AA012	33UJK31021	M	M	SI	S		Y (5)
Fire Damper	30SAC13AA013	33UJK22002	M	M	SI	S		Y (5)
Supply Air Adjustable Damper	30SAC13AA014	33UJK22002	M	M	SI	S	C/NM	Y (5)
Fire Damper	30SAC13AA015	33UJK22004	M	M	SI	S		Y (5)
Fire Damper	30SAC13AA016	33UJK22004	M	M	SI	S		Y (5)
Fire Damper	30SAC13AA017	33UJK22029	M	M	SI	S		Y (5)
Fire Damper	30SAC13AA018	33UJK22028	M	M	SI	S		Y (5)
Supply Air Equip Room Control Damper	30SAC13AA020	33UJK22030	M	M	SI	S	C/NM	Y (5)
Fire Damper	30SAC13AA021	33UJK22004	M	M	SI	S		Y (5)
Fire Damper	30SAC13AA022	33UJK18004	M	M	SI	S		Y (5)
Fire Damper	30SAC13AA023	33UJK18004	M	M	SI	S		Y (5)
Fire Damper	30SAC13AA024	33UJK18002	M	M	SI	S		Y (5)
Supply Air Adjustable Damper	30SAC13AA025	33UJK18004	M	M	SI	S	C/NM	Y (5)
Fire Damper	30SAC13AA026	33UJK18004	M	M	SI	S		Y (5)
Supply Air Adjustable Damper	30SAC13AA027	33UJK18004	M	M	SI	S	C/NM	Y (5)
Supply Air Adjustable Damper	30SAC13AA028	33UJK18004	M	M	SI	S	C/NM	Y (5)
Supply Air Adjustable Damper	30SAC13AA029	33UJK18002	M	M	SI	S	C/NM	Y (5)
Fire Damper	30SAC13AA030	33UJK14002	M	M	SI	S		Y (5)
Supply Air Adjustable Damper	30SAC13AA031	33UJK14002	M	M	SI	S	C/NM	Y (5)
Fire Damper	30SAC13AA032	33UJK14040	M	M	SI	S		Y (5)
Fire Damper	30SAC13AA033	33UJK14040	M	M	SI	S		Y (5)
Fire Damper	30SAC13AA034	33UJK14001	M	M	SI	S		Y (5)
Fire Damper	30SAC13AA035	33UJK18004	M	M	SI	S		Y (5)
Fire Damper	30SAC13AA036	33UJK22004	M	M	SI	S		Y (5)

Table 3.10-1—List of Seismically and Dynamically Qualified Mechanical and Electrical Equipment (Sheet 172 of 197)

Name Tag (Equipment Description)	Tag Number	Local Area KKS ID (Room Location)	EQ Environment (Note 1)	Radiation Environment Zone (Note 2)	EQ Designated Function (Note 3)	Safety Class (Note 4)		EQ Program Designation (Note 5)
Battery Room Supply Air Heater	30SAC13AH001	33UJK22028	M	M	SI	S	C/NM	Y (5)
Supply Air Isolation Damper	30SAC14AA001	34UJK22024	M	M	SI	S	C/NM	Y (5)
Supply Air Isolation Damper	30SAC14AA003	34UJK22024	M	M	SI	S	C/NM	Y (5)
Supply Air Adjustable Damper	30SAC14AA004	34UJK22026	M	M	SI	S	C/NM	Y (5)
Supply Air Adjustable Damper	30SAC14AA005	34UJK22026	M	M	SI	S	C/NM	Y (5)
Supply Air Adjustable Damper	30SAC14AA006	34UJK22024	M	M	SI	S	C/NM	Y (5)
Supply Air Adjustable Damper	30SAC14AA007	34UJK22024	M	M	SI	S	C/NM	Y (5)
Fire Damper	30SAC14AA008	34UJK22024	M	M	SI	S		Y (5)
Supply Air Fire Dampner	30SAC14AA009	34UJK31027	M	M	SI	S	C/NM	Y (5)
Fire Damper	30SAC14AA010	34UJK34024	M	M	SI	S		Y (5)
Fire Damper	30SAC14AA011	34UJK18023	M	M	SI	S		Y (5)
Fire Damper	30SAC14AA012	34UJK18033	M	M	SI	S		Y (5)
Supply Air Adjustable Damper	30SAC14AA013	34UJK18026	M	M	SI	S	C/NM	Y (5)
Supply Air Adjustable Damper	30SAC14AA014	34UJK18026	M	M	SI	S	C/NM	Y (5)
Fire Damper	30SAC14AA015	34UJK18033	M	M	SI	S		Y (5)
Fire Damper	30SAC14AA016	34UJK18022	M	M	SI	S		Y (5)
Fire Damper	30SAC14AA017	34UJK18022	M	M	SI	S		Y (5)
Supply Air Adjustable Damper	30SAC14AA018	34UJK18027	M	M	SI	S	C/NM	Y (5)
Fire Damper	30SAC14AA019	34UJK18024	M	M	SI	S		Y (5)
Supply Air Adjustable Damper	30SAC14AA020	34UJK18027	M	M	SI	S	C/NM	Y (5)
Fire Damper	30SAC14AA021	34UJK18027	M	M	SI	S		Y (5)
Fire Damper	30SAC14AA022	34UJK14033	M	M	SI	S		Y (5)
Supply Air Adjustable Damper	30SAC14AA023	34UJK14025	M	M	SI	S	C/NM	Y (5)
Fire Damper	30SAC14AA024	34UJK14022	M	M	SI	S		Y (5)
Supply Air Adjustable Damper	30SAC14AA025	34UJK14026	M	M	SI	S	C/NM	Y (5)
Fire Damper	30SAC14AA027	34UJK14026	M	M	SI	S		Y (5)
Fire Damper	30SAC14AA028	34UJK14021	M	M	SI	S		Y (5)
Fire Damper	30SAC14AA029	34UJK14026	M	M	SI	S		Y (5)
Supply Air Adjustable Damper	30SAC14AA030	34UJK18027	M	M	SI	S	C/NM	Y (5)
Supply Air Adjustable Damper	30SAC14AA031	34UJK18027	M	M	SI	S	C/NM	Y (5)
Battery Room Supply Air Heater	30SAC14AH001	34UJK18027	M	M	SI	S	C/NM	Y (5)
Battery Room Supply Air Heater	30SAC14AH002	34UJK14026	M	M	SI	S	C/NM	Y (5)
Toilet Supply Air Heater	30SAC14AH003	34UJK26021	M	M	SI	S	C/NM	Y (5)

Table 3.10-1—List of Seismically and Dynamically Qualified Mechanical and Electrical Equipment (Sheet 173 of 197)

Name Tag (Equipment Description)	Tag Number	Local Area KKS ID (Room Location)	EQ Environment (Note 1)	Radiation Environment Zone (Note 2)	EQ Designated Function (Note 3)	Safety Class (Note 4)		EQ Program Designation (Note 5)	
Fire Damper	30SAC15AA001	31UJH10022	M	H	SI	S			Y (5)
Fire Damper	30SAC15AA002	31UJH05021	M	H	SI	S			Y (5)
Fire Damper	30SAC15AA003	31UJH05022	M	H	SI	S			Y (5)
Fire Damper	30SAC15AA004	31UJH05021	M	H	SI	S			Y (5)
Fire Damper	30SAC15AA005	31UJH01022	M	H	SI	S			Y (5)
Fire Damper	30SAC15AA006	31UJH01021	M	H	SI	S			Y (5)
Fire Damper	30SAC15AA007	31UJH01021	M	H	SI	S			Y (5)
Toilet Supply Air Heater	30SAC15AH001	31UJH10024	M	H	SI	S	C/NM	Y (3)	Y (5)
Fire Damper	30SAC16AA001	32UJH05020	M	H	SI	S			Y (5)
Fire Damper	30SAC16AA002	32UJH05020	M	H	SI	S			Y (5)
Fire Damper	30SAC16AA003	32UJH01020	M	H	SI	S			Y (5)
Fire Damper	30SAC16AA004	32UJH01040	M	H	SI	S			Y (5)
Fire Damper	30SAC16AA005	32UJH01040	M	H	SI	S			Y (5)
Fire Damper	30SAC17AA001	33UJH05020	M	H	SI	S			Y (5)
Fire Damper	30SAC17AA002	33UJH05020	M	H	SI	S			Y (5)
Fire Damper	30SAC17AA003	33UJH01020	M	H	SI	S			Y (5)
Fire Damper	30SAC17AA004	33UJH01040	M	H	SI	S			Y (5)
Fire Damper	30SAC17AA005	33UJH01040	M	H	SI	S			Y (5)
Fire Damper	30SAC18AA001	34UJH10022	M	H	SI	S			Y (5)
Fire Damper	30SAC18AA002	34UJH05021	M	H	SI	S			Y (5)
Fire Damper	30SAC18AA003	34UJH05022	M	H	SI	S			Y (5)
Fire Damper	30SAC18AA004	34UJH05021	M	H	SI	S			Y (5)
Fire Damper	30SAC18AA005	34UJH01022	M	H	SI	S			Y (5)
Fire Damper	30SAC18AA006	34UJH05021	M	H	SI	S			Y (5)
Fire Damper	30SAC18AA007	34UJH01022	M	H	SI	S			Y (5)
Toilet Supply Air Heater	30SAC18AH001	34UJH10024	M	H	SI	S	C/NM	Y (3)	Y (5)
Fire Damper	30SAC21AA001	31UJK34022	M	M	SI	S			Y (5)
Fire Damper	30SAC21AA003	31UJK34024	M	M	SI	S			Y (5)
Fire Damper	30SAC21AA004	31UJK31027	M	M	SI	S			Y (5)
Fire Damper	30SAC21AA005	31UJK14026	M	M	SI	S			Y (5)
Fire Damper	30SAC21AA006	31UJK14031	M	M	SI	S			Y (5)
Fire Damper	30SAC21AA007	31UJK18025	M	M	SI	S			Y (5)
Fire Damper	30SAC21AA008	31UJK18027	M	M	SI	S			Y (5)

Table 3.10-1—List of Seismically and Dynamically Qualified Mechanical and Electrical Equipment (Sheet 174 of 197)

Name Tag (Equipment Description)	Tag Number	Local Area KKS ID (Room Location)	EQ Environment (Note 1)	Radiation Environment Zone (Note 2)	EQ Designated Function (Note 3)	Safety Class (Note 4)		EQ Program Designation (Note 5)
Return Air Adjustable Damper	30SAC21AA009	31UJK18031	M	M	SI	S	C/NM	Y (5)
Return Air Adjustable Damper	30SAC21AA010	31UJK18025	M	M	SI	S	C/NM	Y (5)
Fire Damper	30SAC21AA011	31UJK18031	M	M	SI	S		Y (5)
Fire Damper	30SAC21AA012	31UJK18031	M	M	SI	S		Y (5)
Fire Damper	30SAC21AA013	31UJK18031	M	M	SI	S		Y (5)
Exhaust Air Adjustable Damper	30SAC21AA014	31UJK22039	M	M	SI	S	C/NM	Y (5)
Exhaust Air Adjustable Damper	30SAC21AA016	31UJK18031	M	M	SI	S	C/NM	Y (5)
Exhaust Air Pressure Prot Damper	30SAC21AA020	31UJK22038	M	M	SI	S	C/NM	Y (5)
Exhaust Screen	30SAC21AT001	31UJK22038	M	M	SI	S		Y (5)
Exhaust Screen	30SAC21AT002	31UJK22038	M	M	SI	S		Y (5)
Exhaust Air Silencer	30SAC21BS001	31UJK22039	M	M	SI	S		Y (5)
Exhaust Air Silencer	30SAC21BS002	31UJK22039	M	M	SI	S		Y (5)
Maint Exhaust Air Isolation Damper	30SAC22AA001	32UJK31032	M	M	SI	S	C/NM	Y (5)
Fire Damper	30SAC22AA006	32UJK14020	M	M	SI	S		Y (5)
Fire Damper	30SAC22AA007	32UJK18002	M	M	SI	S		Y (5)
Fire Damper	30SAC22AA008	32UJK18005	M	M	SI	S		Y (5)
Fire Damper	30SAC22AA010	32UJK18020	M	M	SI	S		Y (5)
Fire Damper	30SAC22AA011	32UJK18020	M	M	SI	S		Y (5)
Exhaust Air Adjustable Damper	30SAC22AA012	32UJK18020	M	M	SI	S	C/NM	Y (5)
Fire Damper	30SAC22AA013	32UJK18020	M	M	SI	S		Y (5)
Exhaust Air Div 3 Control Damper	30SAC22AA015	32UJK22020	M	M	SI	S	C/NM	Y (5)
Fire Damper	30SAC22AA016	32UJK22004	M	M	SI	S		Y (5)
Fire Damper	30SAC22AA017	32UJK22004	M	M	SI	S		Y (5)
Fire Damper	30SAC22AA018	32UJK22028	M	M	SI	S		Y (5)
Fire Damper	30SAC22AA019	32UJK22028	M	M	SI	S		Y (5)
Fire Damper	30SAC22AA021	32UJK22028	M	M	SI	S		Y (5)
Fire Damper	30SAC22AA023	32UJK31040	M	M	SI	S		Y (5)
Fire Damper	30SAC22AA024	32UJK31040	M	M	SI	S		Y (5)
Fire Damper	30SAC22AA025	32UJK31040	M	M	SI	S		Y (5)
Fire Damper	30SAC22AA026	32UJK31036	M	M	SI	S		Y (5)
Fire Damper	30SAC22AA027	32UJK31036	M	M	SI	S		Y (5)
Fire Damper	30SAC22AA028	32UJK31020	M	M	SI	S		Y (5)
Exhaust Air Adjustable Damper	30SAC22AA029	32UJK31032	M	M	SI	S	C/NM	Y (5)

Table 3.10-1—List of Seismically and Dynamically Qualified Mechanical and Electrical Equipment (Sheet 175 of 197)

Name Tag (Equipment Description)	Tag Number	Local Area KKS ID (Room Location)	EQ Environment (Note 1)	Radiation Environment Zone (Note 2)	EQ Designated Function (Note 3)	Safety Class (Note 4)		EQ Program Designation (Note 5)
Fire Damper	30SAC22AA031	32UJK18005	M	M	SI	S		Y (5)
Fire Damper	30SAC22AA032	32UJK22028	M	M	SI	S		Y (5)
Exhaust Screen	30SAC22AT001	32UJK31045	M	M	SI	S		Y (5)
Exhaust Screen	30SAC22AT002	32UJK31045	M	M	SI	S		Y (5)
Exhaust Air Silencer	30SAC22BS001	32UJK31032	M	M	SI	S		Y (5)
Maint Exhaust Air Isolation Damper	30SAC23AA001	33UJK31032	M	M	SI	S	C/NM	Y (5)
Fire Damper	30SAC23AA006	33UJK14020	M	M	SI	S		Y (5)
Fire Damper	30SAC23AA007	33UJK18002	M	M	SI	S		Y (5)
Fire Damper	30SAC23AA008	33UJK18004	M	M	SI	S		Y (5)
Exhaust Air Adjustable Damper	30SAC23AA009	33UJK18020	M	M	SI	S	C/NM	Y (5)
Fire Damper	30SAC23AA010	33UJK18020	M	M	SI	S		Y (5)
Fire Damper	30SAC23AA011	33UJK18020	M	M	SI	S		Y (5)
Exhaust Air Adjustable Damper	30SAC23AA012	33UJK18020	M	M	SI	S	C/NM	Y (5)
Fire Damper	30SAC23AA013	33UJK18020	M	M	SI	S		Y (5)
Fire Damper	30SAC23AA014	33UJK22030	M	M	SI	S		Y (5)
Exhaust Air Div 3 Control Damper	30SAC23AA015	33UJK22030	M	M	SI	S	C/NM	Y (5)
Fire Damper	30SAC23AA016	33UJK22004	M	M	SI	S		Y (5)
Fire Damper	30SAC23AA017	33UJK22004	M	M	SI	S		Y (5)
Fire Damper	30SAC23AA018	33UJK22028	M	M	SI	S		Y (5)
Fire Damper	30SAC23AA019	33UJK22028	M	M	SI	S		Y (5)
Fire Damper	30SAC23AA021	33UJK22028	M	M	SI	S		Y (5)
Fire Damper	30SAC23AA022	33UJK22030	M	M	SI	S		Y (5)
Fire Damper	30SAC23AA023	33UJK31040	M	M	SI	S		Y (5)
Fire Damper	30SAC23AA024	33UJK31040	M	M	SI	S		Y (5)
Fire Damper	30SAC23AA025	33UJK31040	M	M	SI	S		Y (5)
Fire Damper	30SAC23AA026	33UJK31036	M	M	SI	S		Y (5)
Fire Damper	30SAC23AA027	33UJK31036	M	M	SI	S		Y (5)
Fire Damper	30SAC23AA028	33UJK31020	M	M	SI	S		Y (5)
Exhaust Air Adjustable Damper	30SAC23AA029	33UJK31032	M	M	SI	S	C/NM	Y (5)
Fire Damper	30SAC23AA031	33UJK18004	M	M	SI	S		Y (5)
Fire Damper	30SAC23AA032	33UJK22028	M	M	SI	S		Y (5)
Exhaust Screen	30SAC23AT001	33UJK31045	M	M	SI	S		Y (5)
Exhaust Screen	30SAC23AT002	33UJK31045	M	M	SI	S		Y (5)

Table 3.10-1—List of Seismically and Dynamically Qualified Mechanical and Electrical Equipment (Sheet 176 of 197)

Name Tag (Equipment Description)	Tag Number	Local Area KKS ID (Room Location)	EQ Environment (Note 1)	Radiation Environment Zone (Note 2)	EQ Designated Function (Note 3)	Safety Class (Note 4)		EQ Program Designation (Note 5)
Exhaust Air Silencer	30SAC23BS001	33UJK31032	M	M	SI	S		Y (5)
Fire Damper	30SAC24AA001	34UJK34022	M	M	SI	S		Y (5)
Fire Damper	30SAC24AA003	34UJK34024	M	M	SI	S		Y (5)
Exhaust Air Fire Damper	30SAC24AA004	34UJK31027	M	M	SI	S		Y (5)
Fire Damper	30SAC24AA005	34UJK14026	M	M	SI	S		Y (5)
Fire Damper	30SAC24AA006	34UJK14031	M	M	SI	S		Y (5)
Fire Damper	30SAC24AA007	34UJK18025	M	M	SI	S		Y (5)
Fire Damper	30SAC24AA008	34UJK18024	M	M	SI	S		Y (5)
Return Air Adjustable Damper	30SAC24AA009	34UJK18031	M	M	SI	S	C/NM	Y (5)
Return Air Adjustable Damper	30SAC24AA010	34UJK18025	M	M	SI	S	C/NM	Y (5)
Fire Damper	30SAC24AA011	34UJK18031	M	M	SI	S		Y (5)
Fire Damper	30SAC24AA012	34UJK18031	M	M	SI	S		Y (5)
Fire Damper	30SAC24AA013	34UJK18031	M	M	SI	S		Y (5)
Exhaust Air Adjustable Damper	30SAC24AA014	34UJK22039	M	M	SI	S	C/NM	Y (5)
Exhaust Air Adjustable Damper	30SAC24AA016	34UJK18031	M	M	SI	S	C/NM	Y (5)
Exhaust Screen	30SAC24AT001	34UJK22038	M	M	SI	S		Y (5)
Exhaust Screen	30SAC24AT002	34UJK22038	M	M	SI	S		Y (5)
Exhaust Air Silencer	30SAC24BS001	34UJK22039	M	M	SI	S		Y (5)
Exhaust Air Silencer	30SAC24BS002	34UJK22039	M	M	SI	S		Y (5)
Exhaust Fan Isolation Damper	30SAC31AA001	31UJK22039	M	M	SI	S	C/NM	Y (5)
Exhaust Air Control Damper	30SAC31AA002	31UJK22039	M	M	SI	S	C/NM	Y (5)
Exhaust Air Isolation Damper	30SAC31AA003	31UJK22039	M	M	SI	S	C/NM	Y (5)
Exhaust Fan Isolation Damper	30SAC31AA004	31UJK22039	M	M	SI	S	C/NM	Y (5)
Exhaust Fan Motor Heater	30SAC31AH501	31UJK22039	M	M	SI	S	C/NM	Y (5)
Exhaust Fan	30SAC31AN001	31UJK22039	M	M	SI	S	C/NM	Y (5)
Exhaust Fan Isolation Damper	30SAC32AA001	32UJK31032	M	M	SI	S	C/NM	Y (5)
Exhaust Air Control Damper	30SAC32AA002	32UJK31032	M	M	SI	S	C/NM	Y (5)
Exhaust Air Backdraft Damper	30SAC32AA003	32UJK31032	M	M	SI	S	C/NM	Y (5)
Exhaust Fan Isolation Damper	30SAC32AA004	32UJK31032	M	M	SI	S	C/NM	Y (5)
Exhaust Fan Motor Heater	30SAC32AH501	32UJK31032	M	M	SI	S	C/NM	Y (5)
Exhaust Fan	30SAC32AN001	32UJK31032	M	M	SI	S	C/NM	Y (5)
Exhaust Air Silencer	30SAC32BS002	32UJK31032	M	M	SI	S		Y (5)
Exhaust Fan Isolation Damper	30SAC33AA001	33UJK31032	M	M	SI	S	C/NM	Y (5)

Table 3.10-1—List of Seismically and Dynamically Qualified Mechanical and Electrical Equipment (Sheet 177 of 197)

Name Tag (Equipment Description)	Tag Number	Local Area KKS ID (Room Location)	EQ Environment (Note 1)	Radiation Environment Zone (Note 2)	EQ Designated Function (Note 3)	Safety Class (Note 4)		EQ Program Designation (Note 5)
Exhaust Air Control Damper	30SAC33AA002	33UJK31032	M	M	SI	S	C/NM	Y (5)
Exhaust Air Backdraft Damper	30SAC33AA003	33UJK31032	M	M	SI	S	C/NM	Y (5)
Exhaust Fan Isolation Damper	30SAC33AA004	33UJK31032	M	M	SI	S	C/NM	Y (5)
Exhaust Fan Motor Heater	30SAC33AH501	33UJK31032	M	M	SI	S	C/NM	Y (5)
Exhaust Fan	30SAC33AN001	33UJK31032	M	M	SI	S	C/NM	Y (5)
Exhaust Air Silencer	30SAC33BS002	33UJK31032	M	M	SI	S		Y (5)
Exhaust Fan Isolation Damper	30SAC34AA001	34UJK22039	M	M	SI	S	C/NM	Y (5)
Exhaust Air Control Damper	30SAC34AA002	34UJK22039	M	M	SI	S	C/NM	Y (5)
Exhaust Air Isolation Damper	30SAC34AA003	34UJK22039	M	M	SI	S	C/NM	Y (5)
Exhaust Fan Isolation Damper	30SAC34AA004	34UJK22039	M	M	SI	S	C/NM	Y (5)
Exhaust Fan Motor Heater	30SAC34AH501	34UJK22039	M	M	SI	S	C/NM	Y (5)
Exhaust Fan	30SAC34AN001	34UJK22039	M	M	SI	S	C/NM	Y (5)
Maint Exhaust Fan Isolation Damper	30SAC35AA001	31UJK22039	M	M	SI	S	C/NM	Y (5)
Exhaust Air Isolation Damper-maint	30SAC35AA004	31UJK22039	M	M	SI	S	C/NM	Y (5)
Maint Exhaust Fan Isolation Damper	30SAC38AA001	34UJK22039	M	M	SI	S	C/NM	Y (5)
Exhaust Air Isolation Damper-maint	30SAC38AA004	34UJK22039	M	M	SI	S	C/NM	Y (5)
Exhaust Air Control Damper	30SAC41AA001	31UJK18028	M	M	SI	S	C/NM	Y (5)
Fire Damper	30SAC41AA002	31UJK18024	M	M	SI	S		Y (5)
Fire Damper	30SAC41AA003	31UJK22028	M	M	SI	S		Y (5)
Exhaust Air Adjustable Damper	30SAC41AA004	31UJK22028	M	M	SI	S	C/NM	Y (5)
Battery Room Exhaust Silencer	30SAC41BS001	31UJK22030	M	M	SI	S		Y (5)
Battery Room Exhaust Silencer	30SAC41BS002	31UJK22030	M	M	SI	S		Y (5)
Exhaust Air Control Damper	30SAC42AA001	32UJK22028	M	M	SI	S	C/NM	Y (5)
Exhaust Air Adjustable Damper	30SAC42AA002	32UJK22028	M	M	SI	S	C/NM	Y (5)
Fire Damper	30SAC42AA003	32UJK22028	M	M	SI	S		Y (5)
Exhaust Air Adjustable Damper	30SAC42AA004	32UJK31032	M	M	SI	S	C/NM	Y (5)
Battery Room Exhaust Silencer	30SAC42BS001	32UJK31032	M	M	SI	S		Y (5)
Battery Room Exhaust Silencer	30SAC42BS002	32UJK31032	M	M	SI	S		Y (5)
Exhaust Air Control Damper	30SAC43AA001	33UJK22028	M	M	SI	S	C/NM	Y (5)
Exhaust Air Adjustable Damper	30SAC43AA002	33UJK22028	M	M	SI	S	C/NM	Y (5)
Fire Damper	30SAC43AA003	33UJK22028	M	M	SI	S		Y (5)
Exhaust Air Adjustable Damper	30SAC43AA004	33UJK31032	M	M	SI	S	C/NM	Y (5)
Battery Room Exhaust Silencer	30SAC43BS001	33UJK31032	M	M	SI	S		Y (5)

Table 3.10-1—List of Seismically and Dynamically Qualified Mechanical and Electrical Equipment (Sheet 178 of 197)

Name Tag (Equipment Description)	Tag Number	Local Area KKS ID (Room Location)	EQ Environment (Note 1)	Radiation Environment Zone (Note 2)	EQ Designated Function (Note 3)	Safety Class (Note 4)		EQ Program Designation (Note 5)
Battery Room Exhaust Silencer	30SAC43BS002	33UJK31032	M	M	SI	S		Y (5)
Exhaust Air Control Damper	30SAC44AA001	34UJK18028	M	M	SI	S	C/NM	Y (5)
Fire Damper	30SAC44AA002	34UJK18024	M	M	SI	S		Y (5)
Fire Damper	30SAC44AA003	34UJK22028	M	M	SI	S		Y (5)
Exhaust Air Adjustable Damper	30SAC44AA004	34UJK22028	M	M	SI	S	C/NM	Y (5)
Battery Room Exhaust Silencer	30SAC44BS001	34UJK22028	M	M	SI	S		Y (5)
Battery Room Exhaust Silencer	30SAC44BS002	34UJK22028	M	M	SI	S		Y (5)
Fire Damper	30SAC45AA001	31UJH10021	M	H	SI	S		Y (5)
Fire Damper	30SAC45AA002	31UJH10021	M	H	SI	S		Y (5)
Fire Damper	30SAC45AA003	31UJK22028	M	M	SI	S		Y (5)
Fire Damper	30SAC46AA001	32UJH10040	M	H	SI	S		Y (5)
Fire Damper	30SAC46AA002	32UJH10040	M	H	SI	S		Y (5)
Fire Damper	30SAC46AA003	32UJH10020	M	H	SI	S		Y (5)
Fire Damper	30SAC47AA001	33UJH10040	M	H	SI	S		Y (5)
Fire Damper	30SAC47AA002	33UJH10040	M	H	SI	S		Y (5)
Fire Damper	30SAC47AA003	33UJH10020	M	H	SI	S		Y (5)
Fire Damper	30SAC48AA001	34UJH10021	M	H	SI	S		Y (5)
Fire Damper	30SAC48AA002	34UJH05021	M	H	SI	S		Y (5)
Fire Damper	30SAC48AA003	34UJK22028	M	M	SI	S		Y (5)
Battery Room Exhaust Isolation Damper	30SAC51AA001	31UJK22030	M	M	SI	S	C/NM	Y (5)
Battery Exhaust Backdraft Damper	30SAC51AA002	31UJK22030	M	M	SI	S	C/NM	Y (5)
Battery Exhaust Air Control Damper-Maint	30SAC51AA003	31UJK22030	M	M	SI	S	C/NM	Y (5)
Battery Rm Exhaust Isol Damper-Maint	30SAC51AA004	31UJK22030	M	M	SI	S	C/NM	Y (5)
Battery Exhaust Control Damper-Maint	30SAC51AA006	31UJK22030	M	M	SI	S	C/NM	Y (5)
Battery Room Exhaust Fan	30SAC51AN001	31UJK22030	M	M	SI	S	C/NM	Y (5)
Battery Room Exhaust Isolation Damper	30SAC52AA001	32UJK31032	M	M	SI	S	C/NM	Y (5)
Battery Exhaust Backdraft Damper	30SAC52AA002	32UJK31032	M	M	SI	S	C/NM	Y (5)
Battery Exhaust Air Control Damper	30SAC52AA003	32UJK31032	M	M	SI	S	C/NM	Y (5)
Battery Rm Exhaust Isol Damper-Maint	30SAC52AA004	32UJK31032	M	M	SI	S	C/NM	Y (5)
Battery Exhaust Control Damper-Maint	30SAC52AA006	32UJK31032	M	M	SI	S	C/NM	Y (5)
Battery Room Exhaust Fan	30SAC52AN001	32UJK31032	M	M	SI	S	C/NM	Y (5)
Battery Room Exhaust Isolation Damper	30SAC53AA001	33UJK31032	M	M	SI	S	C/NM	Y (5)
Battery Exhaust Backdraft Damper	30SAC53AA002	33UJK31032	M	M	SI	S	C/NM	Y (5)

Table 3.10-1—List of Seismically and Dynamically Qualified Mechanical and Electrical Equipment (Sheet 179 of 197)

Name Tag (Equipment Description)	Tag Number	Local Area KKS ID (Room Location)	EQ Environment (Note 1)	Radiation Environment Zone (Note 2)	EQ Designated Function (Note 3)	Safety Class (Note 4)		EQ Program Designation (Note 5)	
Battery Exhaust Air Control Damper	30SAC53AA003	33UJK31032	M	M	SI	S	C/NM		Y (5)
Battery Rm Exhaust Isol Damper-Maint	30SAC53AA004	33UJK31032	M	M	SI	S	C/NM		Y (5)
Battery Exhaust Control Damper-Maint	30SAC53AA006	33UJK31032	M	M	SI	S	C/NM		Y (5)
Battery Room Exhaust Fan	30SAC53AN001	33UJK31032	M	M	SI	S	C/NM		Y (5)
Battery Room Exhaust Isolation Damper	30SAC54AA001	34UJK22028	M	M	SI	S	C/NM		Y (5)
Battery Exhaust Backdraft Damper	30SAC54AA002	34UJK22028	M	M	SI	S	C/NM		Y (5)
Battery Exhaust Air Control Damper-maint	30SAC54AA003	34UJK22028	M	M	SI	S	C/NM		Y (5)
Battery Rm Exhaust Isol Damper-Maint	30SAC54AA004	34UJK22028	M	M	SI	S	C/NM		Y (5)
Battery Exhaust Control Damper-Maint	30SAC54AA006	34UJK22028	M	M	SI	S	C/NM		Y (5)
Battery Room Exhaust Fan	30SAC54AN001	34UJK22028	M	M	SI	S	C/NM		Y (5)
LAS Pump Room Recirc Cooler	30SAC61AC001	31UJH01024	M	H	SI	S			Y (5)
KAA Pump Room Recirc Cooler	30SAC61AC002	31UJH01026	M	H	SI	S			Y (5)
LAS Pump Room Recirc Fan	30SAC61AN001	31UJH01024	M	H	SI	S	C/NM	Y (3)	Y (5)
KAA Pump Room Recirc Fan	30SAC61AN002	31UJH01026	M	H	SI	S	C/NM	Y (3)	Y (5)
Moisture Separator Recirc Cooler	30SAC61AT001	31UJH01024	M	H	SI	S			Y (5)
Moisture Separator Recirc Cooler	30SAC61AT002	31UJH01026	M	H	SI	S			Y (5)
LAS Pump Room Recirc Cooler	30SAC62AC001	32UJH01024	M	H	SI	S			Y (5)
KAA Pump Room Recirc Cooler	30SAC62AC002	32UJH01020	M	H	SI	S			Y (5)
LAS Pump Room Recirc Fan	30SAC62AN001	32UJH01024	M	H	SI	S	C/NM	Y (3)	Y (5)
KAA Pump Room Recirc Fan	30SAC62AN002	32UJH01020	M	H	SI	S	C/NM	Y (3)	Y (5)
Moisture Separator Recirc Cooler	30SAC62AT001	32UJH01024	M	H	SI	S			Y (5)
Moisture Separator Recirc Cooler	30SAC62AT002	32UJH01020	M	H	SI	S			Y (5)
LAS Pump Room Recirc Cooler	30SAC63AC001	33UJH01024	M	H	SI	S			Y (5)
KAA Pump Room Recirc Cooler	30SAC63AC002	33UJH01020	M	H	SI	S			Y (5)
LAS Pump Room Recirc Fan	30SAC63AN001	33UJH01024	M	H	SI	S	C/NM	Y (3)	Y (5)
KAA Pump Room Recirc Fan	30SAC63AN002	33UJH01020	M	H	SI	S	C/NM	Y (3)	Y (5)
Moisture Separator Recirc Cooler	30SAC63AT001	33UJH01024	M	H	SI	S			Y (5)
Moisture Separator Recirc Cooler	30SAC63AT002	33UJH01020	M	H	SI	S			Y (5)
LAS Pump Room Recirc Cooler	30SAC64AC001	34UJH01024	M	H	SI	S			Y (5)
KAA Pump Room Recirc Cooler	30SAC64AC002	34UJH01026	M	H	SI	S			Y (5)
LAS Pump Room Recirc Fan	30SAC64AN001	34UJH01024	M	H	SI	S	C/NM	Y (3)	Y (5)
KAA Pump Room Recirc Fan	30SAC64AN002	34UJH01026	M	H	SI	S	C/NM	Y (3)	Y (5)
Moisture Separator Recirc Cooler	30SAC64AT001	34UJH01024	M	H	SI	S			Y (5)

Table 3.10-1—List of Seismically and Dynamically Qualified Mechanical and Electrical Equipment (Sheet 180 of 197)

Name Tag (Equipment Description)	Tag Number	Local Area KKS ID (Room Location)	EQ Environment (Note 1)	Radiation Environment Zone (Note 2)	EQ Designated Function (Note 3)	Safety Class (Note 4)		EQ Program Designation (Note 5)	
Moisture Separator Recirc Cooler	30SAC64AT002	34UJH01026	M	H	SI	S			Y (5)
Toilet Exhaust Fan Isol Damper	30SAC65AA002	31UJK34024	M	M	SI	S	C/NM		Y (5)
Fuel Building Ventilation System (FBVS)									
Supp Iso Dmpr Equip Hatch	30KLL11AA001	30UFA29090	M	H	SI	S			Y (5)
Sup Iso Dmpr, Fuel Hdlg Hall Div 1	30KLL11AA002	30UFA29045	M	H	SI	S	C/NM	Y (3)	Y (5)
Sup Iso Dmpr, Emer Airlock Div 1	30KLL11AA003	30UFA29005	M	H	SI	S	C/NM	Y (3)	Y (5)
Sup Iso/Cntr Dmpr, Fuel Pool Flr	30KLL11AA010	30UFA29015	M	H	SII	NS-AQ	C/NM	Y (3)	Y (5)
Sup Iso Dmpr, Equip Hatch Div 4	30KLL14AA001	30UFA29090	M	H	SI	S	C/NM	Y (3)	Y (5)
Sup Iso Dmpr, Fuel Hdlg Hall Div 4	30KLL14AA002	30UFA29015	M	H	SI	S	C/NM	Y (3)	Y (5)
Sup Iso Dmpr, Emer Airlock Div 4	30KLL14AA003	30UFA29004	M	H	SI	S	C/NM	Y (3)	Y (5)
Exh Iso Dmpr Equip Hatch	30KLL21AA001	30UFA29090	M	H	SI	S			Y (5)
Exh Iso Dmpr, Fuel Pool Flr to KLC	30KLL21AA002	30UFA29015	M	H	SI	S	C/NM	Y (3)	Y (5)
Exh Iso Dmpr, Emer Airlock Div 1	30KLL21AA003	30UFA29005	M	H	SI	S			Y (5)
Exh Iso Dmpr (KLL - Cell 4 to KLE)	30KLL21AA004	30UFA29015	M	H	SI	S	C/NM	Y (3)	Y (5)
Exh Iso Dmpr, Equip Hatch Div 4	30KLL24AA001	30UFA29090	M	H	SI	S	C/NM	Y (3)	Y (5)
Exh Iso Dmpr, Fuel Hdlg Hall Div 4	30KLL24AA002	30UFA29045	M	H	SI	S	C/NM	Y (3)	Y (5)
Exh Iso Dmpr, Emer Airlock	30KLL24AA003	30UFA29005	M	H	SI	S	C/NM	Y (3)	Y (5)
Exh Iso Dmpr (KLL - Cell 4 to KLE)	30KLL24AA004	30UFA29015	M	H	SI	S	C/NM	Y (3)	Y (5)
Sup Iso/Cntr Dmpr (KLE to KLL - Cell 5)	30KLL31AA049	30UFA24045	M	H	SI	S	C/NM	Y (3)	Y (5)
Sup Iso Dmpr (KLE to KLL - Cell 4)	30KLL31AA090	30UFA24095	M	H	SI	S	C/NM	Y (3)	Y (5)
Sup Iso/Cntr Dmpr (KLE to KLL - Cell 4)	30KLL34AA065	30UFA24095	M	H	SI	S	C/NM	Y (3)	Y (5)
Sup Iso Dmpr (KLE to KLL - Cell 5)	30KLL34AA090	30UFA24045	M	H	SI	S	C/NM	Y (3)	Y (5)
Exh Iso Dmpr (KLL - Cell 4 to KLE)	30KLL41AA100	30UFA29054	M	H	SI	S	C/NM	Y (3)	Y (5)
Exh Iso Dmpr (KLL - Cell 5 to KLE)	30KLL41AA101	30UFA24056	M	H	SI	S	C/NM	Y (3)	Y (5)
Exh Iso Dmpr (KLL - Cell 4 to KLE)	30KLL44AA100	30UFA29054	M	H	SI	S	C/NM	Y (3)	Y (5)
Exh Iso Dmpr (KLL - Cell 5 to KLE)	30KLL44AA101	30UFA24056	M	H	SI	S	C/NM	Y (3)	Y (5)
Recirc Cooling Coils, Ex Borating Pump	30KLL61AC001	30UFA01038	M	H	SI	S	C/NM	Y (3)	Y (5)
Recirc Cooling Coils, FP Cooling Pump	30KLL61AC002	30UFA01026	M	H	SI	S	C/NM	Y (3)	Y (5)
Recirc Cooling Coils, FP Cooling Pump	30KLL61AC003	30UFA05082	M	H	SI	S	C/NM	Y (3)	Y (5)
Air Heater, EBS Pump Room	30KLL61AH001	30UFA01038	M	H	SI	S	C/NM	Y (3)	Y (5)
Air Heater, EBS Pump Room	30KLL61AH002	30UFA01038	M	H	SI	S	C/NM	Y (3)	Y (5)
Air Heater, EBS Pipe Chase	30KLL61AH003	30UFA06039	M	H	SI	S	C/NM	Y (3)	Y (5)
Air Heater, EBS Pipe Chase	30KLL61AH004	30UFA06039	M	H	SI	S	C/NM	Y (3)	Y (5)

Table 3.10-1—List of Seismically and Dynamically Qualified Mechanical and Electrical Equipment (Sheet 181 of 197)

Name Tag (Equipment Description)	Tag Number	Local Area KKS ID (Room Location)	EQ Environment (Note 1)	Radiation Environment Zone (Note 2)	EQ Designated Function (Note 3)	Safety Class (Note 4)		EQ Program Designation (Note 5)	
Air Heater, Loading Hall Duct	30KLL61AH010	30UFA10015	M	H	SI	NS-AQ	C/NM	Y (3)	Y (5)
Air Heater, Pipe Pene. Duct	30KLL61AH011	30UFA15045	M	H	SI	NS-AQ	C/NM	Y (3)	Y (5)
Recirc Fan, Ex Borating Pump RM	30KLL61AN001	30UFA01038	M	H	SI	S	C/NM	Y (3)	Y (5)
Recirc Fan, FP Cooling Pump RM	30KLL61AN002	30UFA01026	M	H	SI	S	C/NM	Y (3)	Y (5)
Recirc Fan, FP Cooling Pump RM	30KLL61AN003	30UFA05082	M	H	SI	S	C/NM	Y (3)	Y (5)
Moist Sep, Ex Borating Pump RM	30KLL61AT001	30UFA01038	M	H	SI	S	C/NM	Y (3)	Y (5)
Moist Sep, FP Cooling Pump RM	30KLL61AT002	30UFA01026	M	H	SI	S	C/NM	Y (3)	Y (5)
Moist Sep, FP Cooling Pump RM	30KLL61AT003	30UFA05082	M	H	SI	S	C/NM	Y (3)	Y (5)
Recirc Cooling Coils, Ex Borating Pump	30KLL64AC001	30UFA01088	M	H	SI	S	C/NM	Y (3)	Y (5)
Recirc Cooling Coils, FP Cooling Pump	30KLL64AC002	30UFA01076	M	H	SI	S	C/NM	Y (3)	Y (5)
Recirc Cooling Coils FP Cooling Pump R	30KLL64AC003	30UFA01077	M	H	SI	S	C/NM	Y (3)	Y (5)
Air Heater, EBS Pump Room	30KLL64AH001	30UFA01088	M	H	SI	S	C/NM	Y (3)	Y (5)
Air Heater, EBS Pump Room	30KLL64AH002	30UFA01088	M	H	SI	S	C/NM	Y (3)	Y (5)
Air Heater, EPS Pipe Chase	30KLL64AH003	30UFA06087	M	H	SI	S	C/NM	Y (3)	Y (5)
Air Heater, EPS Pipe Chase	30KLL64AH004	30UFA06087	M	H	SI	S	C/NM	Y (3)	Y (5)
Air Heater, Corridor Duct	30KLL64AH012	30UFA06057	M	H	SI	NS-AQ	C/NM	Y (3)	Y (5)
Air Heater, Corridor Duct	30KLL64AH013	30UFA06056	M	H	SI	NS-AQ	C/NM	Y (3)	Y (5)
Air Heater, Corridor Duct	30KLL64AH014	30UFA24056	M	H	SI	NS-AQ	C/NM	Y (3)	Y (5)
Recirc Fan, Ex Borating Pump RM	30KLL64AN001	30UFA01088	M	H	SI	S	C/NM	Y (3)	Y (5)
Recirc Fan, FP Cooling Pump RM	30KLL64AN002	30UFA01076	M	H	SI	S	C/NM	Y (3)	Y (5)
Recirc Fan, FP Cooling Pump RM	30KLL64AN003	30UFA01077	M	H	SI	S	C/NM	Y (3)	Y (5)
Moist Sep, Ex Boratng Pump RM	30KLL64AT001	30UFA01088	M	H	SI	S	C/NM	Y (3)	Y (5)
Moist Sep, FP Cooling Pump RM	30KLL64AT002	30UFA01076	M	H	SI	S	C/NM	Y (3)	Y (5)
Moist Sep, FP Cooling Pump RM	30KLL64AT003	30UFA01077	M	H	SI	S	C/NM	Y (3)	Y (5)
Main Control Room Air Conditioning System (CRACS)									
Inlet Fire Damper - Div 1	30SAB01AA001	32UJK31034	M	M	SI	S	C/NM		Y (5)
Inlet Isolation Damper - Div 1	30SAB01AA002	32UJK31034	M	M	SI	S	C/NM		Y (5)
Makeup Air Isolation Damper - Div 1	30SAB01AA003	32UJK31034	M	M	SI	S	C/NM		Y (5)
MCRAirCond. Rm Return Balancing - Div1	30SAB01AA005	32UJK31034	M	M	SI	S	C/NM		Y (5)
Makeup Air Balancing Damper - Div 1	30SAB01AA006	32UJK31034	M	M	SI	S	C/NM		Y (5)
Recirc. Return Air Fire Damper - Div 1 A	30SAB01AA007	32UJK31034	M	M	SI	S	C/NM		Y (5)
Recirc. Return Air Fire Damper - Div 1 B	30SAB01AA008	32UJK31034	M	M	SI	S	C/NM		Y (5)
Recirc. Return Air Isolation Damper-Div1	30SAB01AA009	32UJK31034	M	M	SI	S	C/NM		Y (5)

Table 3.10-1—List of Seismically and Dynamically Qualified Mechanical and Electrical Equipment (Sheet 182 of 197)

Name Tag (Equipment Description)	Tag Number	Local Area KKS ID (Room Location)	EQ Environment (Note 1)	Radiation Environment Zone (Note 2)	EQ Designated Function (Note 3)	Safety Class (Note 4)		EQ Program Designation (Note 5)
Recirc. Return Air Balancing Damper-Div 1	30SAB01AA010	32UJK31034	M	M	SI	S	C/NM	Y (5)
Recirc. Air Back-flow Damper - Div 1	30SAB01AA011	32UJK31034	M	M	SI	S	C/NM	Y (5)
Pressure Control Damper - Div 1	30SAB01AA012	32UJK31034	M	M	SI	S	C/NM	Y (5)
Recirc. Supply Air Fire Damper - Div 1 A	30SAB01AA014	32UJK31034	M	M	SI	S	C/NM	Y (5)
Recirc. Supply Air Fire Damper - Div 1 B	30SAB01AA015	32UJK31034	M	M	SI	S	C/NM	Y (5)
Makeup Air Heater - Div 1	30SAB01AH001	32UJK31034	M	M	SI	S		Y (5)
Recirc. Fan Motor Heater - Div 1	30SAB01AH501	32UJK31034	M	M	SI	S		Y (5)
Recirc. Fan - Div 1	30SAB01AN001	32UJK31034	M	M	SI	S	C/NM	Y (5)
Makeup Air Pre-filter - Div 1	30SAB01AT001	32UJK31034	M	M	SI	S	C/NM	Y (5)
Moisture / Condensate Separator - Div 1	30SAB01AT004	32UJK31034	M	M	SI	S		Y (5)
Recirc. HEPA Filter - Div 1	30SAB01AT005	32UJK31034	M	M	SI	S	C/NM	Y (5)
Recirc. Return Silencer - Div 1	30SAB01BS001	32UJK31034	M	M	SI	S		Y (5)
Recirc. Fan Inlet Silencer - Div 1	30SAB01BS002	32UJK31034	M	M	SI	S		Y (5)
Recirc. Fan Outlet Silencer - Div 1	30SAB01BS003	32UJK31034	M	M	SI	S		Y (5)
Inlet Fire Damper - Div 2	30SAB02AA001	32UJK31035	M	M	SI	S	C/NM	Y (5)
MCRAirCond. Rm Return Balanc Damp - Div 2	30SAB02AA005	32UJK31035	M	M	SI	S	C/NM	Y (5)
Recirc. Return Air Fire Damper - Div 2 A	30SAB02AA007	32UJK31035	M	M	SI	S	C/NM	Y (5)
Recirc. Return Air Fire Damper - Div 2 B	30SAB02AA008	32UJK31035	M	M	SI	S	C/NM	Y (5)
Recirc. Return Air Isolation Damper - Di	30SAB02AA009	32UJK31035	M	M	SI	S	C/NM	Y (5)
Recirc. Return Air Balancing Damp - Div 2	30SAB02AA010	32UJK31035	M	M	SII	NS-AQ	C/NM	Y (5)
Recirc. Air Back-flow Damper - Div 2	30SAB02AA011	32UJK31035	M	M	SI	S	C/NM	Y (5)
Recirc. Supply Air Fire Damper - Div 2 A	30SAB02AA014	32UJK31035	M	M	SI	S	C/NM	Y (5)
Recirc. Supply Air Fire Damper - Div 2 B	30SAB02AA015	32UJK31035	M	M	SI	S	C/NM	Y (5)
Recirc. Fan Motor Heater - Div 2	30SAB02AH501	32UJK31035	M	M	SI	S		Y (5)
Recirc. Fan - Div 2	30SAB02AN001	32UJK31035	M	M	SI	S	C/NM	Y (5)
Moisture / Condensate Separator - Div 2	30SAB02AT004	32UJK31035	M	M	SI	S		Y (5)
Recirc. HEPA Filter - Div 2	30SAB02AT005	32UJK31035	M	M	SI	S	C/NM	Y (5)
Recirc. Return Silencer - Div 2	30SAB02BS001	32UJK31035	M	M	SI	S		Y (5)
Recirc. Fan Inlet Silencer - Div 2	30SAB02BS002	32UJK31035	M	M	SI	S		Y (5)
Recirc. Fan Outlet Silencer - Div 2	30SAB02BS003	32UJK31035	M	M	SI	S		Y (5)
Inlet Fire Damper - Div 3	30SAB03AA001	33UJK31034	M	M	SI	S	C/NM	Y (5)
MCRAirCond Rm Return Balanc Damp - Div 3	30SAB03AA005	33UJK31034	M	M	SI	S	C/NM	Y (5)
Recirc. Return Air Fire Damper - Div 3 A	30SAB03AA007	33UJK31034	M	M	SI	S	C/NM	Y (5)

Table 3.10-1—List of Seismically and Dynamically Qualified Mechanical and Electrical Equipment (Sheet 183 of 197)

Name Tag (Equipment Description)	Tag Number	Local Area KKS ID (Room Location)	EQ Environment (Note 1)	Radiation Environment Zone (Note 2)	EQ Designated Function (Note 3)	Safety Class (Note 4)		EQ Program Designation (Note 5)
Recirc. Return Air Fire Damper - Div 3 B	30SAB03AA008	33UJK31034	M	M	SI	S	C/NM	Y (5)
Recirc. Return Air Iso Damper - Div 3	30SAB03AA009	33UJK31034	M	M	SI	S	C/NM	Y (5)
Recirc. Return Air Balancing Damp - Div	30SAB03AA010	33UJK31034	M	M	SII	NS-AQ	C/NM	Y (5)
Recirc. Air Back-flow Damper - Div 3	30SAB03AA011	33UJK31034	M	M	SI	S	C/NM	Y (5)
Recirc. Supply Air Fire Damper - Div 3 A	30SAB03AA014	33UJK31034	M	M	SI	S	C/NM	Y (5)
Recirc. Supply Air Fire Damper - Div 3 B	30SAB03AA015	33UJK31034	M	M	SI	S	C/NM	Y (5)
Recirc. Fan Motor Heater- Div 3	30SAB03AH501	33UJK31035	M	M	SI	S		Y (5)
Recirc. Fan - Div 3	30SAB03AN001	33UJK31035	M	M	SI	S	C/NM	Y (5)
Moisture / Condensate Separator - Div 3	30SAB03AT004	33UJK31035	M	M	SI	S		Y (5)
Recirc. HEPA Filter - Div 3	30SAB03AT005	33UJK31035	M	M	SI	S	C/NM	Y (5)
Recirc. Return Silencer - Div 3	30SAB03BS001	33UJK31035	M	M	SI	S		Y (5)
Recirc. Fan Inlet Silencer - Div 3	30SAB03BS002	33UJK31035	M	M	SI	S		Y (5)
Recirc. Fan Outlet Silencer - Div 3	30SAB03BS003	33UJK31035	M	M	SI	S		Y (5)
Inlet Fire Damper - Div 4	30SAB04AA001	33UJK31035	M	M	SI	S	C/NM	Y (5)
MCRAirCond Rm Return Balanc Damp - Div 4	30SAB04AA005	33UJK31035	M	M	SI	S	C/NM	Y (5)
Recirc. Return Air Fire Damper - Div 4 A	30SAB04AA007	33UJK31035	M	M	SI	S	C/NM	Y (5)
Recirc. Return Air Fire Damper - Div 4 B	30SAB04AA008	33UJK31035	M	M	SI	S	C/NM	Y (5)
Recirc. Return Air Isolation Damper - D	30SAB04AA009	33UJK31035	M	M	SI	S	C/NM	Y (5)
Recirc. Return Air Balancing Damper - Di	30SAB04AA010	33UJK31035	M	M	SI	S	C/NM	Y (5)
Recirc. Air Back-flow Damper - Div 4	30SAB04AA011	33UJK31035	M	M	SI	S	C/NM	Y (5)
Pressure Control Damper - Div 4	30SAB04AA012	33UJK31035	M	M	SI	S	C/NM	Y (5)
Recirc. Supply Air Fire Damper - Div 4 A	30SAB04AA014	33UJK31035	M	M	SI	S	C/NM	Y (5)
Recirc. Supply Air Fire Damper - Div 4 B	30SAB04AA015	33UJK31035	M	M	SI	S	C/NM	Y (5)
Recirc. Cooling Coil - Div 4	30SAB04AC001	33UJK31034	M	M	SI	S		Y (5)
Makeup Air Heaters - Div 4	30SAB04AH001	33UJK31034	M	M	SI	S		Y (5)
Recirc. Fan Motor Heater - Div 4	30SAB04AH501	33UJK31034	M	M	SI	S		Y (5)
Recirc. Fans - Div 4	30SAB04AN001	33UJK31034	M	M	SI	S	C/NM	Y (5)
Makeup Air Pre-filters - Div 4	30SAB04AT001	33UJK31034	M	M	SI	S	C/NM	Y (5)
Moisture / Condensate Separator - Div 4	30SAB04AT004	33UJK31034	M	M	SI	S		Y (5)
Recirc. HEPA Filter - Div 4	30SAB04AT005	33UJK31034	M	M	SI	S	C/NM	Y (5)
Recirc. Return Silencer - Div 4	30SAB04BS001	33UJK31034	M	M	SI	S		Y (5)
Recirc. Fan Inlet Silencer - Div 4	30SAB04BS002	33UJK31034	M	M	SI	S		Y (5)
Recirc. Fan Outlet Silencer - Div 4	30SAB04BS003	33UJK31034	M	M	SI	S		Y (5)

Table 3.10-1—List of Seismically and Dynamically Qualified Mechanical and Electrical Equipment (Sheet 184 of 197)

Name Tag (Equipment Description)	Tag Number	Local Area KKS ID (Room Location)	EQ Environment (Note 1)	Radiation Environment Zone (Note 2)	EQ Designated Function (Note 3)	Safety Class (Note 4)		EQ Program Designation (Note 5)
Iodine Filtr. Inlet Isol. Damper - Div 1	30SAB11AA001	32UJK31034	M	M	SI	S	C/NM	Y (5)
Iodine Filtr. Outlet Air Back Flow Damper - Div 1	30SAB11AA002	32UJK31034	M	M	SI	S	C/NM	Y (5)
SAB11 Recirc Back-draft Damper	30SAB11AA002	32UJK31034	M	M	SII	NS-AQ		Y (5)
SAB11 Filtr Train Iso Dmpr Dwnstrm	30SAB11AA003	32UJK31034	M	M	SI	S	C/NM	Y (5)
Recirc Gastight Iso Dmpr Div 2	30SAB11AA004	32UJK31034	M	M	SI	S	C/NM	Y (5)
Iodine Recirc. Air Back Flow Damper - Div 1	30SAB11AA005	32UJK31034	M	M	SI	S	C/NM	Y (5)
SAB11 Filtration Trn Elec Preheater	30SAB11AH001	32UJK31034	M	M	SI	S		Y (5)
Iodine Filtr. Booster Fan - Div 1	30SAB11AN001	32UJK31034	M	M	SI	S	C/NM	Y (5)
Iodine Filtr. Pre-filter - Div 1	30SAB11AT001	32UJK31034	M	M	SI	S	C/NM	Y (5)
Iodine Filtr. Inlet HEPA Filter - Div 1	30SAB11AT002	32UJK31034	M	M	SI	S	C/NM	Y (5)
Iodine Filtr. Charcoal Filter - Div 1	30SAB11AT003	32UJK31034	M	M	SI	S	C/NM	Y (5)
Iodine Filtr. Outlet HEPA Filter - Div 1	30SAB11AT004	32UJK31034	M	M	SI	S	C/NM	Y (5)
Iodine Filtr. Inlet Iso. Damper - Div 4	30SAB14AA001	33UJK31034	M	M	SI	S	C/NM	Y (5)
SAB14 Iodine Filtration Train Check Dmpr	30SAB14AA002	33UJK31034	M	M	SI	S	C/NM	Y (5)
SAB14 Filtr Train Iso Dmpr Dwnstrm	30SAB14AA003	33UJK31034	M	M	SI	S	C/NM	Y (5)
Recirc Damper Div 3	30SAB14AA004	33UJK31034	M	M	SI	S	C/NM	Y (5)
SAB14 Recirc Backdraft Damper	30SAB14AA005	32UJK31034	M	M	SII	NS-AQ		Y (5)
SAB14 Iodine Filtration Train Preheater	30SAB14AH001	33UJK31034	M	M	SI	S	C/NM	Y (5)
Iodine Filtration Booster Fan - Div 4	30SAB14AN001	33UJK31034	M	M	SI	S	C/NM	Y (5)
Iodine Filtration Pre-filter - Div 4	30SAB14AT001	33UJK31034	M	M	SI	S	C/NM	Y (5)
Iodine Filtr. Inlet HEPA Filter - Div 4	30SAB14AT002	33UJK31034	M	M	SI	S	C/NM	Y (5)
Iodine Filtr. Charcoal Filter - Div 4	30SAB14AT003	33UJK31034	M	M	SI	S	C/NM	Y (5)
Iodine Filtr. Outlet HEPA Filter - Div 4	30SAB14AT004	33UJK31034	M	M	SI	S	C/NM	Y (5)
MCRAirCond. Rm Supply Fire Damp-Div 1	30SAB31AA030	32UJK31034	M	M	SI	S	C/NM	Y (5)
WC & Kitchen Supply Balancing Damper	30SAB32AA001	32UJK26029	M	M	SI	S	C/NM	Y (5)
TechSupp/SpecUse Supply Balanc Damp	30SAB32AA003	32UJK26029	M	M	SI	S	C/NM	Y (5)
TechSupport Supply Fire Damper A	30SAB32AA004	33UJK26033	M	M	SI	S	C/NM	Y (5)
TechSupport Supply Fire Damper B	30SAB32AA005	33UJK26033	M	M	SI	S	C/NM	Y (5)
Tag/Shift Office Supply Balancing Damp	30SAB32AA006	32UJK26029	M	M	SI	S	C/NM	Y (5)
MCR Kitchen, I&C, and Office Supply Air Fire Damper	30SAB32AA007	32UJK26033	M	M	SI	S	C/NM	Y (5)
MCR Kitchen Supply Air Fire Damper	30SAB32AA008	32UJK31019	M	M	SI	S	C/NM	Y (5)
Interconnec Passage Supply Fire Damper	30SAB32AA010	32UJK26020	M	M	SI	S	C/NM	Y (5)

Table 3.10-1—List of Seismically and Dynamically Qualified Mechanical and Electrical Equipment (Sheet 185 of 197)

Name Tag (Equipment Description)	Tag Number	Local Area KKS ID (Room Location)	EQ Environment (Note 1)	Radiation Environment Zone (Note 2)	EQ Designated Function (Note 3)	Safety Class (Note 4)		EQ Program Designation (Note 5)
Interconnect Passage Supply Balanc Damp	30SAB32AA013	32UJK26020	M	M	SI	S	C/NM	Y (5)
SICS1/Computer Rm1 Supply Balancing Damp	30SAB32AA015	32UJK26002	M	M	SI	S	C/NM	Y (5)
SICS2/Computer Rm2 Supply Balancing Damp	30SAB32AA017	33UJK26002	M	M	SI	S	C/NM	Y (5)
MCR, WC, & Kitchen Supply Fire Damp A	30SAB32AA020	32UJK31019	M	M	SI	S	C/NM	Y (5)
MCR, WC, & Kitchen Supply Fire Damp B	30SAB32AA021	32UJK31019	M	M	SI	S	C/NM	Y (5)
MCR, WC & Kitchen Supply Fire Damp C	30SAB32AA022	32UJK31019	M	M	SI	S	C/NM	Y (5)
MCRAirCond. Rm Supply Fire Damp-Div 2	30SAB32AA030	32UJK31035	M	M	SI	S	C/NM	Y (5)
Electric Duct Heater Division 2	30SAB32AH001	32UJK26030	M	M	SI	S	C/NM	Y (5)
Electric Duct Heater Division 3	30SAB32AH002	33UJK26030	M	M	SI	S	C/NM	Y (5)
Electric Duct Heater Division 2	30SAB32AH003	32UJK26015	M	M	SI	S	C/NM	Y (5)
Electric Duct Heater Division 3	30SAB32AH004	33UJK26044	M	M	SI	S	C/NM	Y (5)
Electric Duct Heater Division 3	30SAB32AH005	33UJK26034	M	M	SI	S	C/NM	Y (5)
Electric Duct Heater Division 3	30SAB32AH006	33UJK26032	M	M	SI	S	C/NM	Y (5)
Electric Duct Heater Division 3	30SAB32AH007	33UJK26030	M	M	SI	S	C/NM	Y (5)
Supply Air Duct Silencer 1	30SAB32BS001	32UJK31019	M	M	SI	S		Y (5)
Supply Air Duct Silencer 2	30SAB32BS002	32UJK31019	M	M	SI	S		Y (5)
MCRAirCond Rm Supply Fire Damper - Div 3	30SAB33AA030	33UJK31035	M	M	SI	S	C/NM	Y (5)
MCRAirCond Rm Supply Fire Damper- Div 4	30SAB34AA030	33UJK31034	M	M	SI	S	C/NM	Y (5)
Exhaust Air Recirc. Vol Contr Damper A	30SAB42AA001	32UJK26031	M	M	SI	S	C/NM	Y (5)
Exhaust Air Recirc. Fire Damper	30SAB42AA003	32UJK26031	M	M	SI	S	C/NM	Y (5)
Interconnect Passage Exhaust Fire Damp-A	30SAB42AA004	33UJK26020	M	M	SI	S	C/NM	Y (5)
SICS2/Computer Rm2 Exhaust Fire Damp	30SAB42AA005	33UJK26002	M	M	SI	S	C/NM	Y (5)
SICS2/Computer Rm2 Exhaust Balanc Damp	30SAB42AA006	33UJK26002	M	M	SI	S	C/NM	Y (5)
Interconnect Passage Exhaust Fire Damp-B	30SAB42AA007	32UJK26020	M	M	SI	S	C/NM	Y (5)
SICS1/Computer Rm1 Exhaust Air Fire Damp	30SAB42AA008	32UJK26002	M	M	SI	S	C/NM	Y (5)
SICS1/Computer Rm1 Exhaust Balanc Damp	30SAB42AA009	32UJK26002	M	M	SI	S	C/NM	Y (5)
MCR Exhaust Fire Damper	30SAB42AA010	32UJK26031	M	M	SI	S	C/NM	Y (5)
MCR Exhaust Balancing Damper	30SAB42AA011	32UJK26031	M	M	SI	S	C/NM	Y (5)
TechSupport Exhaust Balancing Damp	30SAB42AA012	33UJK26006	M	M	SI	S	C/NM	Y (5)
TechSupport Exhaust Fire Damper	30SAB42AA013	33UJK26006	M	M	SI	S	C/NM	Y (5)
I&CServ/SpecialUse Exhaust Balanc Damp	30SAB42AA014	33UJK26044	M	M	SI	S	C/NM	Y (5)
I&CServ/SpecialUse Exhaust Fire Damp	30SAB42AA015	33UJK26044	M	M	SI	S	C/NM	Y (5)
Tag/ShiftOffice Exhaust Balancing Damp	30SAB42AA016	32UJK26029	M	M	SI	S	C/NM	Y (5)

Table 3.10-1—List of Seismically and Dynamically Qualified Mechanical and Electrical Equipment (Sheet 186 of 197)

Name Tag (Equipment Description)	Tag Number	Local Area KKS ID (Room Location)	EQ Environment (Note 1)	Radiation Environment Zone (Note 2)	EQ Designated Function (Note 3)	Safety Class (Note 4)		EQ Program Designation (Note 5)
Tag/ShiftOffice Exhaust Fire Damper	30SAB42AA017	32UJK26029	M	M	SI	S	C/NM	Y (5)
Exhaust Air Fire Damper	30SAB45AA001	32UJK31020	M	M	SI	S	C/NM	Y (5)
Exhaust Air Isolation Damper - A	30SAB45AA003	32UJK31020	M	M	SI	S	C/NM	Y (5)
Exhaust Air Isolation Damper - B	30SAB45AA004	32UJK31020	M	M	SI	S	C/NM	Y (5)
Exhaust Air Balancing Damper	30SAB45AA005	32UJK31020	M	M	SII	NS-AQ	C/NM	Y (5)
Exhaust Air Back-flow Damper	30SAB45AA006	32UJK31020	M	M	SII	NS-AQ	C/NM	Y (5)
Restrooms Exhaust Air Fire Damper	30SAB45AA008	32UJK26020	M	M	SI	S	C/NM	Y (5)
Kitchen Exhaust Fire Damper	30SAB45AA009	33UJK26033	M	M	SI	S	C/NM	Y (5)
Exhaust Fan	30SAB45AN001	32UJK31020	M	M	SII	NS-AQ	C/NM	Y (5)
Exhaust Fan Silencer	30SAB45BS001	32UJK31020	M	M	SII	NS-AQ		Y (5)
Essential Service Water Pump Building Ventilation System (ESWPBVS)								
Elec Eq Area Sup Damper Bldg 1	30SAQ01AA001	31UQB02001	M	M	SI	S	C/NM	Y (5)
ESW Pump Area Sup Dmpr Bldg 1	30SAQ01AA002	31UQB02001	M	M	SI	S	C/NM	Y (5)
Plug Valve Chiller Cold Leg Bldg 1	30SAQ01AA003	31UQB02001	M	M	SI	S	C/NM	Y (5)
Plug Valve Chiller Hot Leg Bldg 1	30SAQ01AA004	31UQB02001	M	M	SI	S	C/NM	Y (5)
Recirc Chiller Bldg 1	30SAQ01AC001	31UQB02001	M	M	SI	S	C/NM	Y (5)
Elec Heater Bldg 1	30SAQ01AH001	31UQB02001	M	M	SI	S	C/NM	Y (5)
Recirc Fan Bldg 1	30SAQ01AN001	31UQB02001	M	M	SI	S	C/NM	Y (5)
Impact Sep Bldg 1	30SAQ01AT001	31UQB02001	M	M	SI	S	C/NM	Y (5)
Elec Eq Area Sup Damper Bldg 2	30SAQ02AA001	32UQB02001	M	M	SI	S	C/NM	Y (5)
ESW Pump Area Sup Dmpr Bldg 2	30SAQ02AA002	32UQB02001	M	M	SI	S	C/NM	Y (5)
Plug Valve Chiller Cold Leg Bldg 2	30SAQ02AA003	32UQB02001	M	M	SI	S	C/NM	Y (5)
Plug Valve Chiller Hot Leg Bldg 2	30SAQ02AA004	32UQB02001	M	M	SI	S	C/NM	Y (5)
Recirc Chiller Bldg 2	30SAQ02AC001	32UQB02001	M	M	SI	S	C/NM	Y (5)
Elec Heater Bldg 2	30SAQ02AH001	32UQB02001	M	M	SI	S	C/NM	Y (5)
Recirc Fan Bldg 2	30SAQ02AN001	32UQB02001	M	M	SI	S	C/NM	Y (5)
Impact Sep Bldg 2	30SAQ02AT001	32UQB02001	M	M	SI	S	C/NM	Y (5)
Elec Eq Area Sup Damper Bldg 3	30SAQ03AA001	33UQB02001	M	M	SI	S	C/NM	Y (5)
ESW Pump Area Sup Dmpr Bldg 3	30SAQ03AA002	33UQB02001	M	M	SI	S	C/NM	Y (5)
Plug Valve Chiller Cold Leg Bldg 3	30SAQ03AA003	33UQB02001	M	M	SI	S	C/NM	Y (5)
Plug Valve Chiller Hot Leg Bldg 3	30SAQ03AA004	33UQB02001	M	M	SI	S	C/NM	Y (5)
Recirc Chiller Bldg 3	30SAQ03AC001	33UQB02001	M	M	SI	S	C/NM	Y (5)
Elec Heater Bldg 3	30SAQ03AH001	33UQB02001	M	M	SI	S	C/NM	Y (5)

Table 3.10-1—List of Seismically and Dynamically Qualified Mechanical and Electrical Equipment (Sheet 187 of 197)

Name Tag (Equipment Description)	Tag Number	Local Area KKS ID (Room Location)	EQ Environment (Note 1)	Radiation Environment Zone (Note 2)	EQ Designated Function (Note 3)	Safety Class (Note 4)		EQ Program Designation (Note 5)
Recirc Fan Bldg 3	30SAQ03AN001	33UQB02001	M	M	SI	S	C/NM	Y (5)
Impact Sep Bldg 3	30SAQ03AT001	33UQB02001	M	M	SI	S	C/NM	Y (5)
Elec Eq Area Sup Damper Bldg 4	30SAQ04AA001	34UQB02001	M	M	SI	S	C/NM	Y (5)
ESW Pump Area Sup Dmpr Bldg 4	30SAQ04AA002	34UQB02001	M	M	SI	S	C/NM	Y (5)
Plug Valve Chiller Cold Leg Bldg 4	30SAQ04AA003	34UQB02001	M	M	SI	S	C/NM	Y (5)
Plug Valve Chiller Hot Leg Bldg 4	30SAQ04AA004	34UQB02001	M	M	SI	S	C/NM	Y (5)
Recirc Chiller Bldg 4	30SAQ04AC001	34UQB02001	M	M	SI	S	C/NM	Y (5)
Elec Heater Bldg 4	30SAQ04AH001	34UQB02001	M	M	SI	S	C/NM	Y (5)
Recirc Fan Bldg 4	30SAQ04AN001	34UQB02001	M	M	SI	S	C/NM	Y (5)
Impact Sep Bldg 4	30SAQ04AT001	34UQB02001	M	M	SI	S	C/NM	Y (5)
Emergency Power Generating Building Ventilation System (EPGBVS)								
Building Supply Backdraft Damper - Div 1	30SAD11AA001	31UBP02001	M	M	SI	S	C/NM	Y (5)
Building Supply Backdraft Damper - Div 1	30SAD11AA002	31UBP02001	M	M	SI	S	C/NM	Y (5)
Supply Fan - Div 1	30SAD11AN001	31UBP01001	M	M	SI	S	C/NM	Y (5)
Supply Fan - Div 1	30SAD11AN002	31UBP01001	M	M	SI	S	C/NM	Y (5)
Building Inlet Prefilter - Div 1	30SAD11AT001	31UBP02001	M	M	SI	S	C/NM	Y (5)
Building Inlet Prefilter - Div 1	30SAD11AT002	31UBP02001	M	M	SI	S	C/NM	Y (5)
Diesel Hall Balancing Damper A - Div 1	30SAD12AA001	31UBP02001	M	M	SI	S	C/NM	Y (5)
Diesel Hall Balancing Damper B - Div 1	30SAD12AA002	31UBP01001	M	M	SI	S	C/NM	Y (5)
Diesel Hall Balancing Damper C - Div 1	30SAD12AA003	31UBP01001	M	M	SI	S	C/NM	Y (5)
Diesel Hall Balancing Damper D - Div 1	30SAD12AA004	31UBP01001	M	M	SI	S	C/NM	Y (5)
Diesel Hall Balancing Damper E - Div 1	30SAD12AA005	31UBP01001	M	M	SI	S	C/NM	Y (5)
Recirc. Control Damper - Div 1	30SAD13AA001	31UBP01001	M	M	SI	S	C/NM	Y (5)
Recirc. Balancing Damper - Div 1	30SAD13AA002	31UBP01001	M	M	SI	S	C/NM	Y (5)
Recirc Supply Backdraft Damper - Div 1	30SAD13AA003	31UBP01001	M	M	SI	S	C/NM	Y (5)
Fire Damper - Div 1	30SAD13AA004	31UBP01001	M	M	SII	NS-AQ	C/NM	Y (5)
Fire Damper - Div 1	30SAD13AA005	31UBP01001	M	M	SII	NS-AQ	C/NM	Y (5)
Recirc Exhaust Backdraft Damper - Div 1	30SAD13AA006	31UBP01001	M	M	SI	S	C/NM	Y (5)
Recirc Unit Cooling Coil - Div 1	30SAD13AC001	31UBP01001	M	M	SI	S	C/NM	Y (5)
Recirc Unit Chiller Compressor - Div 1	30SAD13AC101	31UBP01001	M	M	SI	S	C/NM	Y (5)
Recirc Unit Heater - Div 1	30SAD13AH001	31UBP01001	M	M	SI	S		Y (5)
Recirc Unit Humidifier - Div 1	30SAD13AH002	31UBP01001	M	M	SII	NS-AQ		Y (5)
Recirc Unit Supply Fan - Div 1	30SAD13AN001	31UBP01001	M	M	SI	S	C/NM	Y (5)

Table 3.10-1—List of Seismically and Dynamically Qualified Mechanical and Electrical Equipment (Sheet 188 of 197)

Name Tag (Equipment Description)	Tag Number	Local Area KKS ID (Room Location)	EQ Environment (Note 1)	Radiation Environment Zone (Note 2)	EQ Designated Function (Note 3)	Safety Class (Note 4)		EQ Program Designation (Note 5)
Recirc Unit Chiller Fan - Div 1	30SAD13AN101	31UBP01001	M	M	SI	S	C/NM	Y (5)
Recirc Unit Pre-Filter - Div 1	30SAD13AT001	31UBP01001	M	M	SI	S	C/NM	Y (5)
Recirc Unit HEPA Filter - Div 1	30SAD13AT002	31UBP01001	M	M	SI	S	C/NM	Y (5)
Recirc Unit Moisture Seperator - Div 1	30SAD13AT003	31UBP01001	M	M	SI	S		Y (5)
Recirc Unit Chiller Filter - Div 1	30SAD13AT101	31UBP01001	M	M	SI	S	C/NM	Y (5)
Diesel Hall Space Heater/Fan 1 - Div 1	30SAD14AH001	31UBP01001	M	M	SII	NS-AQ	C/NM	Y (5)
Diesel Hall Space Heater/Fan 2 - Div 1	30SAD14AH002	31UBP01001	M	M	SII	NS-AQ	C/NM	Y (5)
Diesel Hall Space Heater/Fan 3 - Div 1	30SAD14AH003	31UBP01001	M	M	SII	NS-AQ	C/NM	Y (5)
Diesel Hall Space Heater/Fan 4 - Div 1	30SAD14AH004	31UBP01001	M	M	SII	NS-AQ	C/NM	Y (5)
Building Exhaust Backdraft Damper-Div 1	30SAD15AA001	31UBP02002	M	M	SI	S	C/NM	Y (5)
Building Exhaust Backdraft Damper-Div 1	30SAD15AA002	31UBP02002	M	M	SI	S	C/NM	Y (5)
Exhaust Fan - Div 1	30SAD15AN001	31UBP01001	M	M	SI	S	C/NM	Y (5)
Exhaust Fan - Div 1	30SAD15AN002	31UBP01001	M	M	SI	S	C/NM	Y (5)
Main Tank Supply Backdraft Damp - Div 1	30SAD16AA001	31UBP01003	M	M	SI	S	C/NM	Y (5)
Main Tank Supply Fire Damper - Div 1	30SAD16AA002	31UBP01003	M	M	SI	S	C/NM	Y (5)
Main Tank Exhaust Balancing Damp A - Div 1	30SAD16AA003	31UBP01003	M	M	SI	S	C/NM	Y (5)
Main Tank Exhaust Balancing Damp B - Div 1	30SAD16AA004	31UBP01003	M	M	SI	S	C/NM	Y (5)
Main Tank Exhaust Backflow Damp - Div 1	30SAD16AA005	31UBP01003	M	M	SI	S	C/NM	Y (5)
Main Tank Supp Damper A - Div 1	30SAD16AA007	31UBP01001	M	M	SI	S	C/NM	Y (5)
Main Tank Supp Damper B - Div 1	30SAD16AA008	31UBP01001	M	M	SI	S	C/NM	Y (5)
Fuel Tank Room Space Heater - Div 1	30SAD16AH001	31UBP01003	M	M	SI	S		Y (5)
Fuel Tank Room Ventilation Fan - Div 1	30SAD16AN001	31UBP01003	M	M	SI	S	C/NM	Y (5)
Building Supply Backdraft Damper - Div 2	30SAD21AA001	32UBP02001	M	M	SI	S	C/NM	Y (5)
Building Supply Backdraft Damper - Div 2	30SAD21AA002	32UBP02001	M	M	SI	S	C/NM	Y (5)
Supply Fan - Div 2	30SAD21AN001	32UBP01001	M	M	SI	S	C/NM	Y (5)
Supply Fan - Div 2	30SAD21AN002	32UBP01001	M	M	SI	S	C/NM	Y (5)
Building Inlet Prefilter - Div 2	30SAD21AT001	32UBP02001	M	M	SI	S	C/NM	Y (5)
Building Inlet Prefilter - Div 2	30SAD21AT002	32UBP02001	M	M	SI	S	C/NM	Y (5)
Diesel Hall Balancing Damper A - Div 1	30SAD22AA001	32UBP02001	M	M	SI	S	C/NM	Y (5)
Diesel Hall Balancing Damper B - Div 1	30SAD22AA002	32UBP01001	M	M	SI	S	C/NM	Y (5)
Diesel Hall Balancing Damper C - Div 1	30SAD22AA003	32UBP01001	M	M	SI	S	C/NM	Y (5)
Diesel Hall Balancing Damper D - Div 1	30SAD22AA004	32UBP01001	M	M	SI	S	C/NM	Y (5)
Diesel Hall Balancing Damper E - Div 1	30SAD22AA005	32UBP01001	M	M	SI	S	C/NM	Y (5)

Table 3.10-1—List of Seismically and Dynamically Qualified Mechanical and Electrical Equipment (Sheet 189 of 197)

Name Tag (Equipment Description)	Tag Number	Local Area KKS ID (Room Location)	EQ Environment (Note 1)	Radiation Environment Zone (Note 2)	EQ Designated Function (Note 3)	Safety Class (Note 4)		EQ Program Designation (Note 5)
Recirc. Control Damper - Div 2	30SAD23AA001	32UBP01001	M	M	SI	S	C/NM	Y (5)
Recirc. Balancing Damper - Div 2	30SAD23AA002	32UBP01001	M	M	SI	S	C/NM	Y (5)
Recirc Supply Backdraft Damper - Div 2	30SAD23AA003	32UBP01001	M	M	SI	S	C/NM	Y (5)
Fire Damper - Div 2	30SAD23AA004	32UBP01001	M	M	SII	NS-AQ	C/NM	Y (5)
Fire Damper - Div 2	30SAD23AA005	32UBP01001	M	M	SII	NS-AQ	C/NM	Y (5)
Recirc Exhaust Backdraft Damper - Div 2	30SAD23AA006	32UBP01001	M	M	SI	S	C/NM	Y (5)
Recirc Unit Cooling Coil - Div 2	30SAD23AC001	32UBP01001	M	M	SI	S	C/NM	Y (5)
Recirc Unit Chiller Compressor - Div 2	30SAD23AC101	32UBP01001	M	M	SI	S	C/NM	Y (5)
Recirc Unit Heater - Div 2	30SAD23AH001	32UBP01001	M	M	SI	S		Y (5)
Recirc Unit Humidifier - Div 2	30SAD23AH002	32UBP01001	M	M	SII	NS-AQ		Y (5)
Recirc Unit Supply Fan - Div 2	30SAD23AN001	32UBP01001	M	M	SI	S	C/NM	Y (5)
Recirc Unit Chiller Fan - Div 2	30SAD23AN101	32UBP01001	M	M	SI	S	C/NM	Y (5)
Recirc Unit Pre-Filter - Div 2	30SAD23AT001	32UBP01001	M	M	SI	S	C/NM	Y (5)
Recirc Unit HEPA Filter - Div 2	30SAD23AT002	32UBP01001	M	M	SI	S	C/NM	Y (5)
Recirc Unit Moisture Seperator - Div 2	30SAD23AT003	32UBP01001	M	M	SI	S		Y (5)
Recirc Unit Chiller Filter - Div 2	30SAD23AT101	32UBP01001	M	M	SI	S	C/NM	Y (5)
Diesel Hall Space Heater/Fan 1 - Div 2	30SAD24AH001	32UBP01001	M	M	SII	NS-AQ	C/NM	Y (5)
Diesel Hall Space Heater/Fan 2 - Div 2	30SAD24AH002	32UBP01001	M	M	SII	NS-AQ	C/NM	Y (5)
Diesel Hall Space Heater/Fan 3 - Div 2	30SAD24AH003	32UBP01001	M	M	SII	NS-AQ	C/NM	Y (5)
Diesel Hall Space Heater/Fan 4 - Div 2	30SAD24AH004	32UBP01001	M	M	SII	NS-AQ	C/NM	Y (5)
Building Exhaust Backdraft Damper-Div 2	30SAD25AA001	32UBP02002	M	M	SI	S	C/NM	Y (5)
Building Exhaust Backdraft Damper-Div 2	30SAD25AA002	32UBP02002	M	M	SI	S	C/NM	Y (5)
Exhaust Fan - Div 2	30SAD25AN001	32UBP01001	M	M	SI	S	C/NM	Y (5)
Exhaust Fan - Div 2	30SAD25AN002	32UBP01001	M	M	SI	S	C/NM	Y (5)
Main Tank Supply Backdraft Damp - Div 2	30SAD26AA001	32UBP01003	M	M	SI	S	C/NM	Y (5)
Main Tank Supply Fire Damper - Div 2	30SAD26AA002	32UBP01003	M	M	SI	S	C/NM	Y (5)
Main Tank Exhaust Balancing Damp A - Div 2	30SAD26AA003	32UBP01003	M	M	SI	S	C/NM	Y (5)
Main Tank Exhaust Balancing Damp B - Div 2	30SAD26AA004	32UBP01003	M	M	SI	S	C/NM	Y (5)
Main Tank Exhaust Backflow Damp - Div 2	30SAD26AA005	32UBP01003	M	M	SI	S	C/NM	Y (5)
Main Tank Supp Damper A - Div 2	30SAD26AA007	32UBP01001	M	M	SI	S	C/NM	Y (5)
Main Tank Supp Damper B - Div 2	30SAD26AA008	32UBP01001	M	M	SI	S	C/NM	Y (5)
Fuel Tank Room Space Heater - Div 2	30SAD26AH001	32UBP01003	M	M	SI	S		Y (5)
Fuel Tank Room Ventilation Fan - Div 2	30SAD26AN001	32UBP01003	M	M	SI	S	C/NM	Y (5)

Table 3.10-1—List of Seismically and Dynamically Qualified Mechanical and Electrical Equipment (Sheet 190 of 197)

Name Tag (Equipment Description)	Tag Number	Local Area KKS ID (Room Location)	EQ Environment (Note 1)	Radiation Environment Zone (Note 2)	EQ Designated Function (Note 3)	Safety Class (Note 4)		EQ Program Designation (Note 5)
Building Supply Backdraft Damper - Div 3	30SAD31AA001	33UBP02001	M	M	SI	S	C/NM	Y (5)
Building Supply Backdraft Damper - Div 3	30SAD31AA002	33UBP02001	M	M	SI	S	C/NM	Y (5)
Supply Fan - Div 3	30SAD31AN001	33UBP01001	M	M	SI	S	C/NM	Y (5)
Supply Fan - Div 3	30SAD31AN002	33UBP01001	M	M	SI	S	C/NM	Y (5)
Building Inlet Prefilter - Div 3	30SAD31AT001	33UBP02001	M	M	SI	S	C/NM	Y (5)
Building Inlet Prefilter - Div 3	30SAD31AT002	33UBP02001	M	M	SI	S	C/NM	Y (5)
Diesel Hall Balancing Damper A - Div 1	30SAD32AA001	33UBP02001	M	M	SI	S	C/NM	Y (5)
Diesel Hall Balancing Damper B - Div 1	30SAD32AA002	33UBP01001	M	M	SI	S	C/NM	Y (5)
Diesel Hall Balancing Damper C - Div 1	30SAD32AA003	33UBP01001	M	M	SI	S	C/NM	Y (5)
Diesel Hall Balancing Damper D - Div 1	30SAD32AA004	33UBP01001	M	M	SI	S	C/NM	Y (5)
Diesel Hall Balancing Damper E - Div 1	30SAD32AA005	33UBP01001	M	M	SI	S	C/NM	Y (5)
Recirc. Control Damper - Div 3	30SAD33AA001	33UBP01001	M	M	SI	S	C/NM	Y (5)
Recirc. Balancing Damper - Div 3	30SAD33AA002	33UBP01001	M	M	SI	S	C/NM	Y (5)
Recirc Supply Backdraft Damper - Div 3	30SAD33AA003	33UBP01001	M	M	SI	S	C/NM	Y (5)
Fire Damper - Div 3	30SAD33AA004	33UBP01001	M	M	SII	NS-AQ	C/NM	Y (5)
Fire Damper - Div 3	30SAD33AA005	33UBP01001	M	M	SII	NS-AQ	C/NM	Y (5)
Recirc Exhaust Backdraft Damper - Div 3	30SAD33AA006	33UBP01001	M	M	SI	S	C/NM	Y (5)
Recirc Unit Cooling Coil - Div 3	30SAD33AC001	33UBP01001	M	M	SI	S	C/NM	Y (5)
Recirc Unit Chiller Compressor - Div 3	30SAD33AC101	33UBP01001	M	M	SI	S	C/NM	Y (5)
Recirc Unit Heater - Div 3	30SAD33AH001	33UBP01001	M	M	SI	S		Y (5)
Recirc Unit Humidifier - Div 3	30SAD33AH002	33UBP01001	M	M	SII	NS-AQ		Y (5)
Recirc Unit Supply Fan - Div 3	30SAD33AN001	33UBP01001	M	M	SI	S	C/NM	Y (5)
Recirc Unit Chiller Fan - Div 3	30SAD33AN101	33UBP01001	M	M	SI	S	C/NM	Y (5)
Recirc Unit Pre-Filter - Div 3	30SAD33AT001	33UBP01001	M	M	SI	S	C/NM	Y (5)
Recirc Unit HEPA Filter - Div 3	30SAD33AT002	33UBP01001	M	M	SI	S	C/NM	Y (5)
Recirc Unit Moisture Seperator - Div 3	30SAD33AT003	33UBP01001	M	M	SI	S		Y (5)
Recirc Unit Chiller Filter - Div 3	30SAD33AT101	33UBP01001	M	M	SI	S	C/NM	Y (5)
Diesel Hall Space Heater/Fan 1 - Div 3	30SAD34AH001	33UBP01001	M	M	SII	NS-AQ	C/NM	Y (5)
Diesel Hall Space Heater/Fan 2 - Div 3	30SAD34AH002	33UBP01001	M	M	SII	NS-AQ	C/NM	Y (5)
Diesel Hall Space Heater/Fan 3 - Div 3	30SAD34AH003	33UBP01001	M	M	SII	NS-AQ	C/NM	Y (5)
Diesel Hall Space Heater/Fan 4 - Div 3	30SAD34AH004	33UBP01001	M	M	SII	NS-AQ	C/NM	Y (5)
Building Exhaust Backdraft Damper-Div 3	30SAD35AA001	33UBP02002	M	M	SI	S	C/NM	Y (5)
Building Exhaust Backdraft Damper-Div 3	30SAD35AA002	33UBP02002	M	M	SI	S	C/NM	Y (5)

Table 3.10-1—List of Seismically and Dynamically Qualified Mechanical and Electrical Equipment (Sheet 191 of 197)

Name Tag (Equipment Description)	Tag Number	Local Area KKS ID (Room Location)	EQ Environment (Note 1)	Radiation Environment Zone (Note 2)	EQ Designated Function (Note 3)	Safety Class (Note 4)		EQ Program Designation (Note 5)
Exhaust Fan - Div 3	30SAD35AN001	33UBP01001	M	M	SI	S	C/NM	Y (5)
Exhaust Fan - Div 3	30SAD35AN002	33UBP01001	M	M	SI	S	C/NM	Y (5)
Main Tank Supply Backdraft Damp - Div 3	30SAD36AA001	33UBP01003	M	M	SI	S	C/NM	Y (5)
Main Tank Supply Fire Damper - Div 3	30SAD36AA002	33UBP01003	M	M	SI	S	C/NM	Y (5)
Main Tank Exhaust Balancing Damp A - Div 3	30SAD36AA003	33UBP01003	M	M	SI	S	C/NM	Y (5)
Main Tank Exhaust Balancing Damp B - Div 3	30SAD36AA004	33UBP01003	M	M	SI	S	C/NM	Y (5)
Main Tank Exhaust Backflow Damp - Div 3	30SAD36AA005	33UBP01003	M	M	SI	S	C/NM	Y (5)
Main Tank Supp Damper A - Div 3	30SAD36AA007	33UBP01001	M	M	SI	S	C/NM	Y (5)
Main Tank Supp Damper B - Div 3	30SAD36AA008	33UBP01001	M	M	SI	S	C/NM	Y (5)
Fuel Tank Room Space Heater - Div 3	30SAD36AH001	33UBP01003	M	M	SI	S		Y (5)
Fuel Tank Room Ventilation Fan - Div 3	30SAD36AN001	33UBP01003	M	M	SI	S	C/NM	Y (5)
Building Supply Backdraft Damper - Div 4	30SAD41AA001	34UBP02001	M	M	SI	S	C/NM	Y (5)
Building Supply Backdraft Damper - Div 4	30SAD41AA002	34UBP02001	M	M	SI	S	C/NM	Y (5)
Supply Fan - Div 4	30SAD41AN001	34UBP01001	M	M	SI	S	C/NM	Y (5)
Supply Fan - Div 4	30SAD41AN002	34UBP01001	M	M	SI	S	C/NM	Y (5)
Building Inlet Prefilter - Div 4	30SAD41AT001	34UBP02001	M	M	SI	S	C/NM	Y (5)
Building Inlet Prefilter - Div 4	30SAD41AT002	34UBP02001	M	M	SI	S	C/NM	Y (5)
Diesel Hall Balancing Damper A - Div 1	30SAD42AA001	34UBP02001	M	M	SI	S	C/NM	Y (5)
Diesel Hall Balancing Damper B - Div 1	30SAD42AA002	34UBP01001	M	M	SI	S	C/NM	Y (5)
Diesel Hall Balancing Damper C - Div 1	30SAD42AA003	34UBP01001	M	M	SI	S	C/NM	Y (5)
Diesel Hall Balancing Damper D - Div 1	30SAD42AA004	34UBP01001	M	M	SI	S	C/NM	Y (5)
Diesel Hall Balancing Damper E - Div 1	30SAD42AA005	34UBP01001	M	M	SI	S	C/NM	Y (5)
Recirc. Control Damper - Div 4	30SAD43AA001	34UBP01001	M	M	SI	S	C/NM	Y (5)
Recirc. Balancing Damper - Div 4	30SAD43AA002	34UBP01001	M	M	SI	S	C/NM	Y (5)
Recirc Supply Backdraft Damper - Div 4	30SAD43AA003	34UBP01001	M	M	SI	S	C/NM	Y (5)
Fire Damper - Div 4	30SAD43AA004	34UBP01001	M	M	SII	NS-AQ	C/NM	Y (5)
Fire Damper - Div 4	30SAD43AA005	34UBP01001	M	M	SII	NS-AQ	C/NM	Y (5)
Recirc Exhaust Backdraft Damper - Div 4	30SAD43AA006	34UBP01001	M	M	SI	S	C/NM	Y (5)
Recirc Unit Cooling Coil - Div 4	30SAD43AC001	34UBP01001	M	M	SI	S	C/NM	Y (5)
Recirc Unit Chiller Compressor - Div 4	30SAD43AC101	34UBP01001	M	M	SI	S	C/NM	Y (5)
Recirc Unit Heater - Div 4	30SAD43AH001	34UBP01001	M	M	SI	S		Y (5)
Recirc Unit Humidifier - Div 4	30SAD43AH002	34UBP01001	M	M	SII	NS-AQ		Y (5)
Recirc Unit Supply Fan - Div 4	30SAD43AN001	34UBP01001	M	M	SI	S	C/NM	Y (5)

Table 3.10-1—List of Seismically and Dynamically Qualified Mechanical and Electrical Equipment (Sheet 192 of 197)

Name Tag (Equipment Description)	Tag Number	Local Area KKS ID (Room Location)	EQ Environment (Note 1)	Radiation Environment Zone (Note 2)	EQ Designated Function (Note 3)	Safety Class (Note 4)	EQ Program Designation (Note 5)
Recirc Unit Chiller Fan - Div 4	30SAD43AN101	34UBP01001	M	M	SI	S C/NM	Y (5)
Recirc Unit Pre-Filter - Div 4	30SAD43AT001	34UBP01001	M	M	SI	S C/NM	Y (5)
Recirc Unit HEPA Filter - Div 4	30SAD43AT002	34UBP01001	M	M	SI	S C/NM	Y (5)
Recirc Unit Moisture Seperator - Div 4	30SAD43AT003	34UBP01001	M	M	SI	S	Y (5)
Recirc Unit Chiller Filter - Div 4	30SAD43AT101	34UBP01001	M	M	SI	S C/NM	Y (5)
Diesel Hall Space Heater/Fan 1 - Div 4	30SAD44AH001	34UBP01001	M	M	SII	NS-AQ C/NM	Y (5)
Diesel Hall Space Heater/Fan 2 - Div 4	30SAD44AH002	34UBP01001	M	M	SII	NS-AQ C/NM	Y (5)
Diesel Hall Space Heater/Fan 3 - Div 4	30SAD44AH003	34UBP01001	M	M	SII	NS-AQ C/NM	Y (5)
Diesel Hall Space Heater/Fan 4 - Div 4	30SAD44AH004	34UBP01001	M	M	SII	NS-AQ C/NM	Y (5)
Building Exhaust Backdraft Damper-Div 4	30SAD45AA001	34UBP02002	M	M	SI	S C/NM	Y (5)
Building Exhaust Backdraft Damper-Div 4	30SAD45AA002	34UBP02002	M	M	SI	S C/NM	Y (5)
Exhaust Fan - Div 4	30SAD45AN001	34UBP01001	M	M	SI	S C/NM	Y (5)
Exhaust Fan - Div 4	30SAD45AN002	34UBP01001	M	M	SI	S C/NM	Y (5)
Main Tank Supply Backdraft Damp - Div 4	30SAD46AA001	34UBP01001	M	M	SI	S C/NM	Y (5)
Main Tank Supply Fire Damper - Div 4	30SAD46AA002	34UBP01003	M	M	SI	S C/NM	Y (5)
Main Tank Exhaust Balancing Damp A - Div 4	30SAD46AA003	34UBP01003	M	M	SI	S C/NM	Y (5)
Main Tank Exhaust Balancing Damp B - Div 4	30SAD46AA004	34UBP01003	M	M	SI	S C/NM	Y (5)
Main Tank Exhaust Backflow Damp - Div 4	30SAD46AA005	34UBP01003	M	M	SI	S C/NM	Y (5)
Main Tank Supp Damper A - Div 4	30SAD46AA007	34UBP01001	M	M	SI	S C/NM	Y (5)
Main Tank Supp Damper B - Div 4	30SAD46AA008	34UBP01001	M	M	SI	S C/NM	Y (5)
Fuel Tank Room Space Heater - Div 4	30SAD46AH001	34UBP01003	M	M	SI	S	Y (5)
Fuel Tank Room Ventilation Fan - Div 4	30SAD46AN001	34UBP01003	M	M	SI	S C/NM	Y (5)
CONTAINMENT ISOLATION SYSTEMS							
Fuel Pool Cooling and Purification System (FPCPS)							
FPP to RB Pool Inside Containment Isolation Valve	30FAL12AA001	30UJA07016	H	H	ES PAM SI	S C/NM	Y (4) Y (5)
FPP TO rb Pool Outside Containment Isolation Valve	30FAL12AA002	30UFA06045	M	H	ES PAM SI	S C/NM	Y (3) Y (5)
FPP to RB Pool Outside Containment Isolation Valve	30FAL15AA002	30UFA10045	M	H	ES PAM SI	S C/NM	Y (3) Y (5)
FPP to RB Pool Inside Containment Isolation Check Valve	30FAL15AA003	30UJA11013	H	H	ES SI	S C/NM	Y (4) Y (5)
Drain/test Connection	30FAL15AA406	30UJA11013	H	H	ES SI	S C/NM	Y (4) Y (5)

Table 3.10-1—List of Seismically and Dynamically Qualified Mechanical and Electrical Equipment (Sheet 193 of 197)

Name Tag (Equipment Description)	Tag Number	Local Area KKS ID (Room Location)	EQ Environment (Note 1)	Radiation Environment Zone (Note 2)	EQ Designated Function (Note 3)			Safety Class (Note 4)		EQ Program Designation (Note 5)		
Vent/test Connection	30FAL12AA501	30UFA06045	M	H	ES		SI	S	C/NM	Y(3)		Y (5)
Vent/test Connection	30FAL15AA503	30UFA10045	M	H	ES		SI	S	C/NM	Y(3)		Y (5)
Drain/test Connection	30FAL15AA407	30UJA11013	H	H	ES		SI	S	C/NM		Y(4)	Y(5)
Drain/test Connection	30FAL10AA404	30UJA11013	H	H	ES		SI	S	C/NM		Y(4)	Y(5)
Reactor Cavity Isolation Valve	30FAL10AA001	30UJA11021	H	H			SI	S	C/NM		Y(4)	Y(5)
Internals Compartment Isolation Valve	30FAL10AA002	30UJA11021	H	H			SI	S	C/NM		Y(4)	Y(5)
ILCO Isolation Valve	30FAL10AA003	30UJA11021	H	H			SI	S	C/NM		Y(4)	Y(5)
RB Transfer Compartment Isolation Valve	30FAL10AA004	30UJA11021	H	H			SI	S	C/NM		Y(4)	Y(5)
RB Pool Isolation Valve	30FAL10AA005	30UJA11021	H	H			SI	S	C/NM		Y(4)	Y(5)
Drain Valve	30FAL10AA403	30UJA07016	H	H			SI	S	C/NM		Y(4)	Y(5)
RB Pool Skimming Pump Check Valve	30FAL11AA002	30UJA11021	H	H			SI	S	C/NM		Y(4)	Y(5)
Drain Valve	30FAL16AA402	30UJA11021	H	H			SI	S	C/NM		Y(4)	Y(5)
Drain Valve	30FAL16AA403	30UJA11021	H	H			SI	S	C/NM		Y(4)	Y(5)
RB Pool to IRWST Drain Valve	30FAL16AA003	30UJA11021	H	H			SI	S	C/NM		Y(4)	Y(5)
Demineralized Water Distribution System (DWDS)												
Demin Water LLRT Conn Valve	30GHC74AA251	30UFA21045	M	H	ES		SI	S	C/NM	Y (3)		Y (5)
Demin Water Thermal Relief Valve	30GHC74AA192	30UFA21046	M	H	ES		SI	S	C/NM	Y (3)		Y (5)
Demienalized Water Outer Cotainment Isolation Valve	30GHC74AA001	30UFA21045	M	H	ES	PAM	SI	S	C/NM	Y (3)		Y (5)
Demienalized Water Inner Cotainment Isolation Valve	30GHC74AA002	30UJA18013	H	H	ES	PAM	SI	S	C/NM		Y (4)	Y (5)
Leak-Off System (LOS)												
CIDS Inside Containment Isolation Valve	30JMM10AA006	30UJA23013	H	H	ES	PAM	SI	S	C/NM		Y (4)	Y (5)
CIDS Outside Containment Isolation Valve	30JMM10AA007	30UFA24095	M	H	ES	PAM	SI	S	C/NM	Y (3)		Y (5)
CIDS LLRT Test Valve	30JMM10AA252	30UJA23013	H	H	ES		SI	S	C/NM		Y (4)	Y (5)
CLES Containment Isolation Valve: Located Inside RB (UJA)	30JMM23AA001	30UJA11016	H	H	ES	PAM	SI	S	C/NM		Y (4)	Y (5)
CLES Containment Isolation Valve: Located Inside Annulus (U	30JMM23AA002	30UJB05002	M	M	ES	PAM	SI	S	C/NM			Y (5)
CLES LLRT Test Valve	30JMM23AA252	30UJA11016	H	H	ES		SI	S	C/NM		Y (4)	Y (5)
CLTS Inside Containment Isolation Valve (Non Motorized)	30JMM30AA001	30UJA29015	H	H	ES		SI	S	C/NM		Y (4)	Y (5)

Table 3.10-1—List of Seismically and Dynamically Qualified Mechanical and Electrical Equipment (Sheet 194 of 197)

Name Tag (Equipment Description)	Tag Number	Local Area KKS ID (Room Location)	EQ Environment (Note 1)	Radiation Environment Zone (Note 2)	EQ Designated Function (Note 3)	Safety Class (Note 4)	EQ Program Designation (Note 5)
CLTS Outside Containment Isolation Valve (Non Motorized)	30JMM30AA003	33UJH10002	M	H	ES SI	S	Y (5)
CLTS LLRT Test Valve	30JMM30AA252	30UJA29015	H	H	ES SI	S C/NM	Y (4) Y (5)
Severe Accident Heat Removal System (SAHRS)							
Suction Line from IRWST Outer Containment Isolation Valve	30JMQ40AA001	34UJH01010	M	H	ES PAM SI	S C/NM	Y (3) Y (5)
Spraying Line Outer Containment Isolation Valve	30JMQ41AA001	34UJH05007	M	H	ES PAM SI	S C/NM	Y (3) Y (5)
Spraying Line Inside Containment Isolation Check Valve	30JMQ41AA002	30UJA07015	H	H	ES SI	S C/NM	Y (4) Y (5)
Spraying Line from IRWST LLRT Conn Valve	30JMQ41AA008	30UJA07015	H	H	ES SI	S C/NM	Y (4) Y (5)
Active Recirculation Line Outer Containment Isolation Valve	30JMQ42AA001	34UJH05007	M	H	ES PAM SI	S C/NM	Y (3) Y (5)
Active Recirculation Line Inside Containment Isolation Chec	30JMQ42AA002	30UJA07015	H	H	ES SI	S C/NM	Y (4) Y (5)
Active Recirculation Line LLRT Conn Valve	30JMQ42AA008	30UJA07015	H	H	ES SI	S C/NM	Y (4) Y (5)
Backflushing Line Outer Containment Isolation Valve	30JMQ43AA001	34UJH05007	M	H	ES PAM SI	S C/NM	Y (3) Y (5)
Backflushing Line Inside Containment Isolation Check Valve	30JMQ43AA002	30UJA07015	H	H	ES SI	S C/NM	Y (4) Y (5)
Backflushing Line LLRT Conn Valve	30JMQ43AA008	30UJA07015	H	H	ES SI	S C/NM	Y (4) Y (5)
Passive Flooding Motorized Iso. Valve	30JMQ42AA004	30UJA04005	H	H	ES SI	S C/NM	Y (4) Y (5)
Passive Flooding Motorized Iso. Valve	30JMQ42AA006	30UJA04006	H	H	ES SI	S C/NM	Y (4) Y (5)
Passive Flooding Isolation Valve	30JMQ42AA003	30UJA04005	H	H	SII	NS-AQ C/NM	Y (4) Y (5)
Passive Flooding Isolation Valve	30JMQ42AA005	30UJA04006	H	H	SII	NS-AQ C/NM	Y (4) Y (5)
Gaseous Waste Processing System (GWPS)							
Containment Isolation Valve (UFA Side)	30KPL84AA002	30UFA06095	M	H	ES PAM SI	S C/NM	Y (3) Y (5)
Containment Isolation Valve (UJA side)	30KPL84AA003	30UJA07016	H	H	ES PAM SI	S C/NM	Y (4) Y (5)
Containment Isolation Valve (UJA side)	30KPL85AA003	30UJA07016	H	H	ES PAM SI	S C/NM	Y (4) Y (5)
Containment Isolation Valve (UFA side)	30KPL85AA004	30UFA06095	M	H	ES PAM SI	S C/NM	Y (3) Y (5)
Test Connection Isolation Valve	30KPL85AA202	30UJA07016	H	H	ES SI	S C/NM	Y (4) Y (5)
Condensate (Inside Containment) System (CS)							
Condensate C I-V	30LCA90AA003	32UJE34003	M	M	ES PAM SI	S C/NM	Y (5)

Table 3.10-1—List of Seismically and Dynamically Qualified Mechanical and Electrical Equipment (Sheet 195 of 197)

Name Tag (Equipment Description)	Tag Number	Local Area KKS ID (Room Location)	EQ Environment (Note 1)	Radiation Environment Zone (Note 2)	EQ Designated Function (Note 3)			Safety Class (Note 4)		EQ Program Designation (Note 5)	
Condensate Containment I-V	30LCA90AA004	30UJA34014	H	H	ES		SI	S	C/NM	Y (4)	Y (5)
Condensate C I-V	30LCA90AA005	30UJA34014	H	H	ES	PAM	SI	S	C/NM	Y (4)	Y (5)
Condensate C I-V	30LCA90AA006	32UJE34003	M	M	ES	PAM	SI	S	C/NM		Y (5)
Condensate BD Cooler I-V	30LCA90AA009	30UJA07018	H	H			SII	NS-AQ	C/NM	Y (4)	Y (5)
Condensate BD Cooler I-V	30LCA90AA015	30UJA07018	H	H			SII	NS-AQ	C/NM	Y (4)	Y (5)
Condensate BD Cooler I-V	30LCA90AA016	30UJA07018	H	H			SII	NS-AQ	C/NM	Y (4)	Y (5)
Condensate BD Cooler I-V	30LCA90AA017	30UJA07018	H	H			SII	NS-AQ	C/NM	Y (4)	Y (5)
Condensate BD Cooler Bypass I-V	30LCA90AA030	30UJA07018	H	H			SII	NS-AQ	C/NM	Y (4)	Y (5)
Condensate BD Cooler Bypass I-V	30LCA90AA031	30UJA07018	H	H			SII	NS-AQ	C/NM	Y (4)	Y (5)
BD Cooler Shell Relief Valve	30LCA90AA182	30UJA07018	H	H			SII	NS-AQ	C/NM	Y (4)	Y (5)
BD Cooler Shell Relief Valve	30LCA90AA184	30UJA07018	H	H			SII	NS-AQ	C/NM	Y (4)	Y (5)
BD Cooler Bypass Relief Valve	30LCA90AA186	30UJA07018	H	H			SII	NS-AQ	C/NM	Y (4)	Y (5)
Condensate Relief Valve by BD Cooler	30LCA90AA188	30UJA07018	H	H			SII	NS-AQ	C/NM	Y (4)	Y (5)
Condensate Relief Valve by BD Cooler	30LCA90AA191	30UJA07018	H	H			SII	NS-AQ	C/NM	Y (4)	Y (5)
CondensateContainmentPenetration Relief	30LCA90AA195	30UJA34014	H	H	ES		SI	S	C/NM	Y (4)	Y (5)
Condensate BD Cooler Press Instr I-V	30LCA90AA310	30UJA07018	H	H			SII	NS-AQ	C/NM	Y (4)	Y (5)
Condensate BD Cooler Press Instr I-V	30LCA90AA320	30UJA07018	H	H			SII	NS-AQ	C/NM	Y (4)	Y (5)
Condensate BD Cooler Press Instr I-V	30LCA90AA330	30UJA07018	H	H			SII	NS-AQ	C/NM	Y (4)	Y (5)
Condensate Drain I-V	30LCA90AA401	30UJA07018	H	H			SII	NS-AQ	C/NM	Y (4)	Y (5)
Condensate Drain I-V	30LCA90AA402	30UJA07018	H	H			SII	NS-AQ	C/NM	Y (4)	Y (5)
BD Cooler Drain Valve	30LCA90AA406	30UJA07018	H	H			SII	NS-AQ	C/NM	Y (4)	Y (5)
Condensate Drain Valve	30LCA90AA410	30UJA07018	H	H			SII	NS-AQ	C/NM	Y (4)	Y (5)
BD Cooler Vent Valve	30LCA90AA501	30UJA07018	H	H			SII	NS-AQ	C/NM	Y (4)	Y (5)
BD Cooler Vent Valve	30LCA90AA502	30UJA07018	H	H			SII	NS-AQ	C/NM	Y (4)	Y (5)
BD Cooler Vent Valve	30LCA90AA511	30UJA07018	H	H			SII	NS-AQ	C/NM	Y (4)	Y (5)
Central Gas Distribution (Nitrogen) System (CGDS)											
QJB Outside Containment Isolation Valve	30QJB40AA001	30UFA24045	M	H	ES	PAM	SI	S	C/NM	Y (3)	Y (5)
QJB INside Containment Isolation Valve	30QJB40AA002	30UJA23013	H	H	ES	PAM	SI	S	C/NM	Y (4)	Y (5)
QJB Outside Containment Isolation Valve	30QJB40AA003	30UFA10095	M	H	ES	PAM	SI	S	C/NM	Y (3)	Y (5)
QJB Inside Containment Isolation Valve #	30QJB40AA004	30UJA11016	H	H	ES	PAM	SI	S	C/NM	Y (4)	Y (5)
Operational Chilled Water System - Nuclear Island (OCWS)											
Outside Containment Isolation Valve #1	30QNJ41AA002	30UFA17095	M	H	ES	PAM	SI	S	C/NM	Y (3)	Y (5)

Next File

Table 3.10-1—List of Seismically and Dynamically Qualified Mechanical and Electrical Equipment (Sheet 196 of 197)

Name Tag (Equipment Description)	Tag Number	Local Area KKS ID (Room Location)	EQ Environment (Note 1)	Radiation Environment Zone (Note 2)	EQ Designated Function (Note 3)	Safety Class (Note 4)	EQ Program Designation (Note 5)
Inside Containment Isolation Valve #1	30QNJ41AA003	30UJA18016	H	H	ES SI	S C/NM	Y (4) Y (5)
Inside Containment Isolation Valve #2	30QNJ41AA027	30UJA18016	H	H	ES PAM SI	S C/NM	Y (4) Y (5)
Outside Containment Isolation Valve #2	30QNJ41AA028	30UFA17095	M	H	ES PAM SI	S C/NM	Y (3) Y (5)
OCWS Thermal Relief	30QNJ41AA192	30UJA18016	H	H	ES SI	S C/NM	Y (4) Y (5)
Secondary Sampling (SG Blowdown) System (SECSS)							
BD Sampling Containment Isolation Valve	30QUC11AA001	30UFA10045	M	H	ES PAM SI	S C/NM	Y (3) Y (5)
BD Sampling Containment Isolation Valve	30QUC11AA011	30UJA11013	H	H	ES PAM SI	S C/NM	Y (4) Y (5)
BD Sampling Drain Valve	30QUC11AA304	30UJA11013	H	H	SI	S C/NM	Y (4) Y (5)
BD Sampling Drain Valve	30QUC11AA305	30UJA11013	H	H	SI	S C/NM	Y (4) Y (5)
BD Sampling Containment Isolation Valve	30QUC12AA001	30UFA10045	M	H	ES PAM SI	S C/NM	Y (3) Y (5)
BD Sampling Containment Isolation Valve	30QUC12AA011	30UJA11013	H	H	ES PAM SI	S C/NM	Y (4) Y (5)
BD Sampling Drain Valve	30QUC12AA304	30UJA11013	H	H	SI	S C/NM	Y (4) Y (5)
BD sAmpling Drain Valve	30QUC12AA305	30UJA11013	H	H	SI	S C/NM	Y (4) Y (5)
BD Sampling Containment Isolation Valve	30QUC13AA001	30UFA10095	M	H	ES PAM SI	S C/NM	Y (3) Y (5)
BD Sampling Containment Isolation Valve	30QUC13AA011	30UJA11016	H	H	ES PAM SI	S C/NM	Y (4) Y (5)
BD Sampling Drain Valve	30QUC13AA304	30UJA11016	H	H	ES SI	S C/NM	Y (4) Y (5)
BD Sampling Drain Valve	30QUC13AA305	30UJA11016	H	H	SI	S C/NM	Y (4) Y (5)
BD Sampling Containment Isolation Valve	30QUC14AA001	30UFA10095	M	H	ES PAM SI	S C/NM	Y (3) Y (5)
BD Sampling Containment Isolation Valve	30QUC14AA011	30UJA11016	H	H	ES PAM SI	S C/NM	Y (4) Y (5)
BD Sampling Drain Valve	30QUC14AA304	30UJA11016	H	H	ES SI	S C/NM	Y (4) Y (5)
BD Sampling Drain Valve	30QUC14AA305	30UJA11016	H	H	ES SI	S C/NM	Y (4) Y (5)
BD Sampling Thermal Relief Valve	30QUC11AA193	30UJA11013	H	H	SI	S C/NM	Y (4) Y (5)
BD Sampling Thermal Relief Valve	30QUC12AA193	30UJA11013	H	H	SI	S C/NM	Y (4) Y (5)
BD Sampling Thermal Relief Valve	30QUC13AA193	30UJA11016	H	H	SI	S C/NM	Y (4) Y (5)
BD Sampling Thermal Relief Valve	30QUC14AA193	30UJA11016	H	H	SI	S C/NM	Y (4) Y (5)
Compressed Air System (CAS)							
Compressed Air Ourter Containment Isolation Valve	30SCB01AA001	30UFA13054	M	H	ES PAM SI	S C/NM	Y (3) Y (5)
Compressed Air Inner Containment Isolation Valve	30SCB01AA002	30UJA15016	H	H	ES PAM SI	S C/NM	Y (4) Y (5)
Compressed Air Ourter Containment Isolation Valve	30SCB02AA001	30UFA13054	M	H	ES SI	S C/NM	Y (3) Y (5)

Table 3.10-1—List of Seismically and Dynamically Qualified Mechanical and Electrical Equipment (Sheet 197 of 197)

Name Tag (Equipment Description)	Tag Number	Local Area KKS ID (Room Location)	EQ Environment (Note 1)	Radiation Environment Zone (Note 2)	EQ Designated Function (Note 3)	Safety Class (Note 4)	EQ Program Designation (Note 5)
Compressed Air Inner Containment Isolation Valve	30SCB02AA002	30UJA15016	H	H	ES SI	S C/NM	Y (4) Y (5)
Fire Water Distribution System (FWDS)							
Fire Water Distribution System Containment Isolation Valve	30SGB30AA031	30UFA13054	M	H	ES PAM SI	S C/NM	Y (3) Y (5)
Fire Water Distribution System Containment Isolation Valve	30SGB30AA032	30UJA15016	H	H	ES PAM SI	S C/NM	Y (4) Y (5)
Fire Water Distribution Thermal Relief Valve	30SGB30AA191	30UJA15016	H	H	ES SI	S C/NM	Y (4) Y (5)
Nuclear Island Drain & Vent System (NI DVS)							
Inner Containment Isolation Valve	30KTA10AA017	30UJA07016	H	H	ES PAM SI	S C/NM	Y (4) Y (5)
Inner Containment Isolation Valve	30KTC10AA005	30UJA07016	H	H	ES PAM SI	S C/NM	Y (4) Y (5)
Outer Containment Isolation Valve	30KTC10AA006	30UFA06095	M	H	ES PAM SI	S C/NM	Y (3) Y (5)
Outer Containment Isolation Valve	30KTC10AA010	30UFA06095	M	H	ES PAM SI	S C/NM	Y (3) Y (5)
Outer Containment Isolation Valve Floor Drn 2 RB	30KTD10AA015	30UFA06095	M	H	ES PAM SI	S C/NM	Y (3) Y (5)
Inner Containment Isolation Valve Flr Drn 2 RB	30KTD10AA024	30UJA07016	H	H	ES PAM SI	S C/NM	Y (4) Y (5)
Outer Containment Isolation Valve Annulus	30KTD10AA025	30UFA10095	M	H	ES PAM SI	S C/NM	Y (3) Y (5)
Outer Containment Isolation Valve	30KTA10AA018	30UFA06045	M	H	ES PAM SI	S C/NM	Y (3) Y (5)
Containment Penetrations -Piping							
As a result of the EQ program screening no components in this system were identified for seismic qualification. These penetrations are considered part of the Containment Building Inner Shell and are analyzed as part of that structure.							
For a List of Components Requiring EQ see Table 3.11-1							

NOTES

1. EQ Environment: (M= Mild, H= Harsh)
2. Radiation Environment Zone: (M= Mild, H= Harsh)
3. EQ Designated Function: RT (Reactor Trip), ES (Engineered Safeguards), PAM (Post Accident Monitoring), SI (Seismic I), SII (Seismic II)
4. Safety Class: S (Safety Related), NS-AQ (Supplemental Grade Non-Safety), 1E (Class 1E), EMC (Electromagnetic Compatibility), C/NM (Consumables/Non Metallics)
5.EQ Program Designation: Yes (1) = Full EQ Electrical, Yes (2) = EQ Radiation Harsh-Electrical, Yes (3) = EQ Radiation Harsh-Consumables, Yes (4) = EQ for Consumables, Yes (5) = EQ Seismic, Yes (6) = EQ EMC.

Table 3.11-1—List of Environmentally Qualified Electrical/I&C Equipment (Sheet 1 of 130)

Name Tag (Equipment Description)	Tag Number	Local Area KKS ID (Room Location)	EQ Environment (Note 1)	Radiation Environment Zone (Note 2)	EQ Designated Function (Note 3)	Safety Class (Note 4)	EQ Program Designation (Note 5)
FLUID SYSTEMS							
Reactor Coolant System (RCS)							
RPV							
RPV O-ring Leakoff Vlv #2 Actuator	30JAA10AA004	30UJA15005	H	H	SII	NS-AQ EMC	Y (1) Y (5)
RPV High Pt Vent Vlv #1 Actuator	30JAA10AA501	30UJA18019	H	H	SII	NS-AQ EMC	Y (1) Y (5)
RPV High Pt Vent Vlv #2 Actuator	30JAA10AA502	30UJA18019	H	H	SII	NS-AQ EMC	Y (1) Y (5)
Post Acc RPV High Pt Vent Vlv #1 Act	30JAA10AA508	30UJA18019	H	H	SI	S 1E EMC	Y (1) Y (5)
Post Acc RPV High Pt Vent Vlv #2 Act	30JAA10AA509	30UJA18019	H	H	SI	S 1E EMC	Y (1) Y (5)
Post Acc RPV High Pt Vent Vlv #3 Act	30JAA10AA510	30UJA18019	H	H	SI	S 1E EMC	Y (1) Y (5)
Post Acc RPV High Pt Vent Vlv #4 Act	30JAA10AA511	30UJA18019	H	H	SI	S 1E EMC	Y (1) Y (5)
Vlv AA503 Position Sensor	30JAA10CG503B	30UJA18019	H	H	SII	NS-AQ EMC	Y (1) Y (5)
Vlv AA504 Position Sensor	30JAA10CG504B	30UJA18019	H	H	SII	NS-AQ EMC	Y (1) Y (5)
Vlv AA505 Position Sensor	30JAA10CG505B	30UJA18019	H	H	SII	NS-AQ EMC	Y (1) Y (5)
RPV Inner O-Ring Press Sensor	30JAA10CP050	30UJA15005	H	H	SII	NS-AQ EMC	Y (1) Y (5)
RPV Inner O-Ring Temp Sensor	30JAA10CT050	30UJA15005	H	H	SII	NS-AQ EMC	Y (1) Y (5)
CRDMs							
CRDM #1 Operating Coil	30JDA01AE	30UJA11001	H	H	SII	NS-AQ EMC	Y (1) Y (5)
CRDM #1 Position Sensor	30JDA01CG801	30UJA11001	H	H	RT SI	S 1E EMC	Y (1) Y (5)
CRDM #1 Top Position Limit Sensor	30JDA01CG802	30UJA11001	H	H	SII	NS-AQ EMC	Y (1) Y (5)
CRDM #1 Bottom Position Limit Sensor	30JDA01CG803	30UJA11001	H	H	SI	S 1E EMC	Y (1) Y (5)
CRDM #1 Temperature Sensor	30JDA01CT801	30UJA11001	H	H	RT SI	S 1E EMC	Y (1) Y (5)
CRDM #2 Operating Coil	30JDA02AE	30UJA11001	H	H	SII	NS-AQ EMC	Y (1) Y (5)
CRDM #2 Position Sensor	30JDA02CG801	30UJA11001	H	H	RT SI	S 1E EMC	Y (1) Y (5)
CRDM #2 Top Position Limit Sensor	30JDA02CG802	30UJA11001	H	H	SII	NS-AQ EMC	Y (1) Y (5)
CRDM #2 Bottom Position Limit Sensor	30JDA02CG803	30UJA11001	H	H	SI	S 1E EMC	Y (1) Y (5)
CRDM #2 Temperature Sensor	30JDA02CT801	30UJA11001	H	H	RT SI	S 1E EMC	Y (1) Y (5)
CRDM #3 Operating Coil	30JDA03AE	30UJA11001	H	H	SII	NS-AQ EMC	Y (1) Y (5)
CRDM #3 Position Sensor	30JDA03CG801	30UJA11001	H	H	RT SI	S 1E EMC	Y (1) Y (5)
CRDM #3 Top Position Limit Sensor	30JDA03CG802	30UJA11001	H	H	SII	NS-AQ EMC	Y (1) Y (5)
CRDM #3 Bottom Position Limit Sensor	30JDA03CG803	30UJA11001	H	H	SI	S 1E EMC	Y (1) Y (5)
CRDM #3 Temperature Sensor	30JDA03CT801	30UJA11001	H	H	RT SI	S 1E EMC	Y (1) Y (5)

Table 3.11-1—List of Environmentally Qualified Electrical/I&C Equipment (Sheet 2 of 130)

Name Tag (Equipment Description)	Tag Number	Local Area KKS ID (Room Location)	EQ Environment (Note 1)	Radiation Environment Zone (Note 2)	EQ Designated Function (Note 3)	Safety Class (Note 4)			EQ Program Designation (Note 5)	
CRDM #4 Operating Coil	30JDA04AE	30UJA11001	H	H		SII	NS-AQ		EMC	Y (1)	Y (5)
CRDM #4 Position Sensor	30JDA04CG801	30UJA11001	H	H	RT	SI	S	1E	EMC	Y (1)	Y (5)
CRDM #4 Top Position Limit Sensor	30JDA04CG802	30UJA11001	H	H		SII	NS-AQ		EMC	Y (1)	Y (5)
CRDM #4 Bottom Position Limit Sensor	30JDA04CG803	30UJA11001	H	H		SI	S	1E	EMC	Y (1)	Y (5)
CRDM #4 Temperature Sensor	30JDA04CT801	30UJA11001	H	H	RT	SI	S	1E	EMC	Y (1)	Y (5)
CRDM #5 Operating Coil	30JDA05AE	30UJA11001	H	H		SII	NS-AQ		EMC	Y (1)	Y (5)
CRDM #5 Position Sensor	30JDA05CG801	30UJA11001	H	H	RT	SI	S	1E	EMC	Y (1)	Y (5)
CRDM #5 Top Position Limit Sensor	30JDA05CG802	30UJA11001	H	H		SII	NS-AQ		EMC	Y (1)	Y (5)
CRDM #5 Bottom Position Limit Sensor	30JDA05CG803	30UJA11001	H	H		SI	S	1E	EMC	Y (1)	Y (5)
CRDM #5 Temperature Sensor	30JDA05CT801	30UJA11001	H	H	RT	SI	S	1E	EMC	Y (1)	Y (5)
CRDM #6 Operating Coil	30JDA06AE	30UJA11001	H	H		SII	NS-AQ		EMC	Y (1)	Y (5)
CRDM #6 Position Sensor	30JDA06CG801	30UJA11001	H	H	RT	SI	S	1E	EMC	Y (1)	Y (5)
CRDM #6 Top Position Limit Sensor	30JDA06CG802	30UJA11001	H	H		SII	NS-AQ		EMC	Y (1)	Y (5)
CRDM #6 Bottom Position Limit Sensor	30JDA06CG803	30UJA11001	H	H		SI	S	1E	EMC	Y (1)	Y (5)
CRDM #6 Temperature Sensor	30JDA06CT801	30UJA11001	H	H	RT	SI	S	1E	EMC	Y (1)	Y (5)
CRDM #7 Operating Coil	30JDA07AE	30UJA11001	H	H		SII	NS-AQ		EMC	Y (1)	Y (5)
CRDM #7 Position Sensor	30JDA07CG801	30UJA11001	H	H	RT	SI	S	1E	EMC	Y (1)	Y (5)
CRDM #7 Top Position Limit Sensor	30JDA07CG802	30UJA11001	H	H		SII	NS-AQ		EMC	Y (1)	Y (5)
CRDM #7 Bottom Position Limit Sensor	30JDA07CG803	30UJA11001	H	H		SI	S	1E	EMC	Y (1)	Y (5)
CRDM #7 Temperature Sensor	30JDA07CT801	30UJA11001	H	H	RT	SI	S	1E	EMC	Y (1)	Y (5)
CRDM #8 Operating Coil	30JDA08AE	30UJA11001	H	H		SII	NS-AQ		EMC	Y (1)	Y (5)
CRDM #8 Position Sensor	30JDA08CG801	30UJA11001	H	H	RT	SI	S	1E	EMC	Y (1)	Y (5)
CRDM #8 Top Position Limit Sensor	30JDA08CG802	30UJA11001	H	H		SII	NS-AQ		EMC	Y (1)	Y (5)
CRDM #8 Bottom Position Limit Sensor	30JDA08CG803	30UJA11001	H	H		SI	S	1E	EMC	Y (1)	Y (5)
CRDM #8 Temperature Sensor	30JDA08CT801	30UJA11001	H	H	RT	SI	S	1E	EMC	Y (1)	Y (5)
CRDM #9 Operating Coil	30JDA09AE	30UJA11001	H	H		SII	NS-AQ		EMC	Y (1)	Y (5)
CRDM #9 Position Sensor	30JDA09CG801	30UJA11001	H	H	RT	SI	S	1E	EMC	Y (1)	Y (5)
CRDM #9 Top Position Limit Sensor	30JDA09CG802	30UJA11001	H	H		SII	NS-AQ		EMC	Y (1)	Y (5)
CRDM #9 Bottom Position Limit Sensor	30JDA09CG803	30UJA11001	H	H		SI	S	1E	EMC	Y (1)	Y (5)
CRDM #9 Temperature Sensor	30JDA09CT801	30UJA11001	H	H	RT	SI	S	1E	EMC	Y (1)	Y (5)
CRDM #10 Operating Coil	30JDA10AE	30UJA11001	H	H		SII	NS-AQ		EMC	Y (1)	Y (5)
CRDM #10 Position Sensor	30JDA10CG801	30UJA11001	H	H	RT	SI	S	1E	EMC	Y (1)	Y (5)
CRDM #10 Top Position Limit Sensor	30JDA10CG802	30UJA11001	H	H		SII	NS-AQ		EMC	Y (1)	Y (5)

Table 3.11-1—List of Environmentally Qualified Electrical/I&C Equipment (Sheet 3 of 130)

Name Tag (Equipment Description)	Tag Number	Local Area KKS ID (Room Location)	EQ Environment (Note 1)	Radiation Environment Zone (Note 2)	EQ Designated Function (Note 3)	Safety Class (Note 4)			EQ Program Designation (Note 5)	
CRDM #10 Bottom Position Limit Sensor	30JDA10CG803	30UJA11001	H	H	SI	S	1E	EMC	Y (1)	Y (5)
CRDM #10 Temperature Sensor	30JDA10CT801	30UJA11001	H	H	RT SI	S	1E	EMC	Y (1)	Y (5)
CRDM #11 Operating Coil	30JDA11AE	30UJA11001	H	H	SII	NS-AQ		EMC	Y (1)	Y (5)
CRDM #11 Position Sensor	30JDA11CG801	30UJA11001	H	H	RT SI	S	1E	EMC	Y (1)	Y (5)
CRDM #11 Top Position Limit Sensor	30JDA11CG802	30UJA11001	H	H	SII	NS-AQ		EMC	Y (1)	Y (5)
CRDM #11 Bottom Position Limit Sensor	30JDA11CG803	30UJA11001	H	H	SI	S	1E	EMC	Y (1)	Y (5)
CRDM #11 Temperature Sensor	30JDA11CT801	30UJA11001	H	H	RT SI	S	1E	EMC	Y (1)	Y (5)
CRDM #12 Operating Coil	30JDA12AE	30UJA11001	H	H	SII	NS-AQ		EMC	Y (1)	Y (5)
CRDM #12 Position Sensor	30JDA12CG801	30UJA11001	H	H	RT SI	S	1E	EMC	Y (1)	Y (5)
CRDM #12 Top Position Limit Sensor	30JDA12CG802	30UJA11001	H	H	SII	NS-AQ		EMC	Y (1)	Y (5)
CRDM #12 Bottom Position Limit Sensor	30JDA12CG803	30UJA11001	H	H	SI	S	1E	EMC	Y (1)	Y (5)
CRDM #12 Temperature Sensor	30JDA12CT801	30UJA11001	H	H	RT SI	S	1E	EMC	Y (1)	Y (5)
CRDM #13 Operating Coil	30JDA13AE	30UJA11001	H	H	SII	NS-AQ		EMC	Y (1)	Y (5)
CRDM #13 Position Sensor	30JDA13CG801	30UJA11001	H	H	RT SI	S	1E	EMC	Y (1)	Y (5)
CRDM #13 Top Position Limit Sensor	30JDA13CG802	30UJA11001	H	H	SII	NS-AQ		EMC	Y (1)	Y (5)
CRDM #13 Bottom Position Limit Sensor	30JDA13CG803	30UJA11001	H	H	SI	S	1E	EMC	Y (1)	Y (5)
CRDM #13 Temperature Sensor	30JDA13CT801	30UJA11001	H	H	RT SI	S	1E	EMC	Y (1)	Y (5)
CRDM #14 Operating Coil	30JDA14AE	30UJA11001	H	H	SII	NS-AQ		EMC	Y (1)	Y (5)
CRDM #14 Position Sensor	30JDA14CG801	30UJA11001	H	H	RT SI	S	1E	EMC	Y (1)	Y (5)
CRDM #14 Top Position Limit Sensor	30JDA14CG802	30UJA11001	H	H	SII	NS-AQ		EMC	Y (1)	Y (5)
CRDM #14 Bottom Position Limit Sensor	30JDA14CG803	30UJA11001	H	H	SI	S	1E	EMC	Y (1)	Y (5)
CRDM #14 Temperature Sensor	30JDA14CT801	30UJA11001	H	H	RT SI	S	1E	EMC	Y (1)	Y (5)
CRDM #15 Operating Coil	30JDA15AE	30UJA11001	H	H	SII	NS-AQ		EMC	Y (1)	Y (5)
CRDM #15 Position Sensor	30JDA15CG801	30UJA11001	H	H	RT SI	S	1E	EMC	Y (1)	Y (5)
CRDM #15 Top Position Limit Sensor	30JDA15CG802	30UJA11001	H	H	SII	NS-AQ		EMC	Y (1)	Y (5)
CRDM #15 Bottom Position Limit Sensor	30JDA15CG803	30UJA11001	H	H	SI	S	1E	EMC	Y (1)	Y (5)
CRDM #15 Temperature Sensor	30JDA15CT801	30UJA11001	H	H	RT SI	S	1E	EMC	Y (1)	Y (5)
CRDM #16 Operating Coil	30JDA16AE	30UJA11001	H	H	SII	NS-AQ		EMC	Y (1)	Y (5)
CRDM #16 Position Sensor	30JDA16CG801	30UJA11001	H	H	RT SI	S	1E	EMC	Y (1)	Y (5)
CRDM #16 Top Position Limit Sensor	30JDA16CG802	30UJA11001	H	H	SII	NS-AQ		EMC	Y (1)	Y (5)
CRDM #16 Bottom Position Limit Sensor	30JDA16CG803	30UJA11001	H	H	SI	S	1E	EMC	Y (1)	Y (5)
CRDM #16 Temperature Sensor	30JDA16CT801	30UJA11001	H	H	RT SI	S	1E	EMC	Y (1)	Y (5)
CRDM #17 Operating Coil	30JDA17AE	30UJA11001	H	H	SII	NS-AQ		EMC	Y (1)	Y (5)

Table 3.11-1—List of Environmentally Qualified Electrical/I&C Equipment (Sheet 4 of 130)

Name Tag (Equipment Description)	Tag Number	Local Area KKS ID (Room Location)	EQ Environment (Note 1)	Radiation Environment Zone (Note 2)	EQ Designated Function (Note 3)	Safety Class (Note 4)	EQ Program Designation (Note 5)
CRDM #17 Position Sensor	30JDA17CG801	30UJA11001	H	H	RT SI	S 1E EMC	Y (1) Y (5)
CRDM #17 Top Position Limit Sensor	30JDA17CG802	30UJA11001	H	H	SII	NS-AQ EMC	Y (1) Y (5)
CRDM #17 Bottom Position Limit Sensor	30JDA17CG803	30UJA11001	H	H	SI	S 1E EMC	Y (1) Y (5)
CRDM #17 Temperature Sensor	30JDA17CT801	30UJA11001	H	H	RT SI	S 1E EMC	Y (1) Y (5)
CRDM #18 Operating Coil	30JDA18AE	30UJA11001	H	H	SII	NS-AQ EMC	Y (1) Y (5)
CRDM #18 Position Sensor	30JDA18CG801	30UJA11001	H	H	RT SI	S 1E EMC	Y (1) Y (5)
CRDM #18 Top Position Limit Sensor	30JDA18CG802	30UJA11001	H	H	SII	NS-AQ EMC	Y (1) Y (5)
CRDM #18 Bottom Position Limit Sensor	30JDA18CG803	30UJA11001	H	H	SI	S 1E EMC	Y (1) Y (5)
CRDM #18 Temperature Sensor	30JDA18CT801	30UJA11001	H	H	RT SI	S 1E EMC	Y (1) Y (5)
CRDM #19 Operating Coil	30JDA19AE	30UJA11001	H	H	SII	NS-AQ EMC	Y (1) Y (5)
CRDM #19 Position Sensor	30JDA19CG801	30UJA11001	H	H	RT SI	S 1E EMC	Y (1) Y (5)
CRDM #19 Top Position Limit Sensor	30JDA19CG802	30UJA11001	H	H	SII	NS-AQ EMC	Y (1) Y (5)
CRDM #19 Bottom Position Limit Sensor	30JDA19CG803	30UJA11001	H	H	SI	S 1E EMC	Y (1) Y (5)
CRDM #19 Temperature Sensor	30JDA19CT801	30UJA11001	H	H	RT SI	S 1E EMC	Y (1) Y (5)
CRDM #20 Operating Coil	30JDA20AE	30UJA11001	H	H	SII	NS-AQ EMC	Y (1) Y (5)
CRDM #20 Position Sensor	30JDA20CG801	30UJA11001	H	H	RT SI	S 1E EMC	Y (1) Y (5)
CRDM #20 Top Position Limit Sensor	30JDA20CG802	30UJA11001	H	H	SII	NS-AQ EMC	Y (1) Y (5)
CRDM #20 Bottom Position Limit Sensor	30JDA20CG803	30UJA11001	H	H	SI	S 1E EMC	Y (1) Y (5)
CRDM #20 Temperature Sensor	30JDA20CT801	30UJA11001	H	H	RT SI	S 1E EMC	Y (1) Y (5)
CRDM #21 Operating Coil	30JDA21AE	30UJA11001	H	H	SII	NS-AQ EMC	Y (1) Y (5)
CRDM #21 Position Sensor	30JDA21CG801	30UJA11001	H	H	RT SI	S 1E EMC	Y (1) Y (5)
CRDM #21 Top Position Limit Sensor	30JDA21CG802	30UJA11001	H	H	SII	NS-AQ EMC	Y (1) Y (5)
CRDM #21 Bottom Position Limit Sensor	30JDA21CG803	30UJA11001	H	H	SI	S 1E EMC	Y (1) Y (5)
CRDM #21 Temperature Sensor	30JDA21CT801	30UJA11001	H	H	RT SI	S 1E EMC	Y (1) Y (5)
CRDM #22 Operating Coil	30JDA22AE	30UJA11001	H	H	SII	NS-AQ EMC	Y (1) Y (5)
CRDM #22 Position Sensor	30JDA22CG801	30UJA11001	H	H	RT SI	S 1E EMC	Y (1) Y (5)
CRDM #22 Top Position Limit Sensor	30JDA22CG802	30UJA11001	H	H	SII	NS-AQ EMC	Y (1) Y (5)
CRDM #22 Bottom Position Limit Sensor	30JDA22CG803	30UJA11001	H	H	SI	S 1E EMC	Y (1) Y (5)
CRDM #22 Temperature Sensor	30JDA22CT801	30UJA11001	H	H	RT SI	S 1E EMC	Y (1) Y (5)
CRDM #26 Operating Coil	30JDA26AE	30UJA11001	H	H	SII	NS-AQ EMC	Y (1) Y (5)
CRDM #26 Position Sensor	30JDA26CG801	30UJA11001	H	H	RT SI	S 1E EMC	Y (1) Y (5)
CRDM #26 Top Position Limit Sensor	30JDA26CG802	30UJA11001	H	H	SII	NS-AQ EMC	Y (1) Y (5)
CRDM #26 Bottom Position Limit Sensor	30JDA26CG803	30UJA11001	H	H	SI	S 1E EMC	Y (1) Y (5)

Table 3.11-1—List of Environmentally Qualified Electrical/I&C Equipment (Sheet 5 of 130)

Name Tag (Equipment Description)	Tag Number	Local Area KKS ID (Room Location)	EQ Environment (Note 1)	Radiation Environment Zone (Note 2)	EQ Designated Function (Note 3)		Safety Class (Note 4)			EQ Program Designation (Note 5)	
CRDM #26 Temperature Sensor	30JDA26CT801	30UJA11001	H	H	RT	SI	S	1E	EMC	Y (1)	Y (5)
CRDM #27 Operating Coil	30JDA27AE	30UJA11001	H	H		SII	NS-AQ		EMC	Y (1)	Y (5)
CRDM #27 Position Sensor	30JDA27CG801	30UJA11001	H	H	RT	SI	S	1E	EMC	Y (1)	Y (5)
CRDM #27 Top Position Limit Sensor	30JDA27CG802	30UJA11001	H	H		SII	NS-AQ		EMC	Y (1)	Y (5)
CRDM #27 Bottom Position Limit Sensor	30JDA27CG803	30UJA11001	H	H		SI	S	1E	EMC	Y (1)	Y (5)
CRDM #27 Temperature Sensor	30JDA27CT801	30UJA11001	H	H	RT	SI	S	1E	EMC	Y (1)	Y (5)
CRDM #28 Operating Coil	30JDA28AE	30UJA11001	H	H		SII	NS-AQ		EMC	Y (1)	Y (5)
CRDM #28 Position Sensor	30JDA28CG801	30UJA11001	H	H	RT	SI	S	1E	EMC	Y (1)	Y (5)
CRDM #28 Top Position Limit Sensor	30JDA28CG802	30UJA11001	H	H		SII	NS-AQ		EMC	Y (1)	Y (5)
CRDM #28 Bottom Position Limit Sensor	30JDA28CG803	30UJA11001	H	H		SI	S	1E	EMC	Y (1)	Y (5)
CRDM #28 Temperature Sensor	30JDA28CT801	30UJA11001	H	H	RT	SI	S	1E	EMC	Y (1)	Y (5)
CRDM #29 Operating Coil	30JDA29AE	30UJA11001	H	H		SII	NS-AQ		EMC	Y (1)	Y (5)
CRDM #29 Position Sensor	30JDA29CG801	30UJA11001	H	H	RT	SI	S	1E	EMC	Y (1)	Y (5)
CRDM #29 Top Position Limit Sensor	30JDA29CG802	30UJA11001	H	H		SII	NS-AQ		EMC	Y (1)	Y (5)
CRDM #29 Bottom Position Limit Sensor	30JDA29CG803	30UJA11001	H	H		SI	S	1E	EMC	Y (1)	Y (5)
CRDM #29 Temperature Sensor	30JDA29CT801	30UJA11001	H	H	RT	SI	S	1E	EMC	Y (1)	Y (5)
CRDM #30 Operating Coil	30JDA30AE	30UJA11001	H	H		SII	NS-AQ		EMC	Y (1)	Y (5)
CRDM #30 Position Sensor	30JDA30CG801	30UJA11001	H	H	RT	SI	S	1E	EMC	Y (1)	Y (5)
CRDM #30 Top Position Limit Sensor	30JDA30CG802	30UJA11001	H	H		SII	NS-AQ		EMC	Y (1)	Y (5)
CRDM #30 Bottom Position Limit Sensor	30JDA30CG803	30UJA11001	H	H		SI	S	1E	EMC	Y (1)	Y (5)
CRDM #30 Temperature Sensor	30JDA30CT801	30UJA11001	H	H	RT	SI	S	1E	EMC	Y (1)	Y (5)
CRDM #31 Operating Coil	30JDA31AE	30UJA11001	H	H		SII	NS-AQ		EMC	Y (1)	Y (5)
CRDM #31 Position Sensor	30JDA31CG801	30UJA11001	H	H	RT	SI	S	1E	EMC	Y (1)	Y (5)
CRDM #31 Top Position Limit Sensor	30JDA31CG802	30UJA11001	H	H		SII	NS-AQ		EMC	Y (1)	Y (5)
CRDM #31 Bottom Position Limit Sensor	30JDA31CG803	30UJA11001	H	H		SI	S	1E	EMC	Y (1)	Y (5)
CRDM #31 Temperature Sensor	30JDA31CT801	30UJA11001	H	H	RT	SI	S	1E	EMC	Y (1)	Y (5)
CRDM #32 Operating Coil	30JDA32AE	30UJA11001	H	H		SII	NS-AQ		EMC	Y (1)	Y (5)
CRDM #32 Position Sensor	30JDA32CG801	30UJA11001	H	H	RT	SI	S	1E	EMC	Y (1)	Y (5)
CRDM #32 Top Position Limit Sensor	30JDA32CG802	30UJA11001	H	H		SII	NS-AQ		EMC	Y (1)	Y (5)
CRDM #32 Bottom Position Limit Sensor	30JDA32CG803	30UJA11001	H	H		SI	S	1E	EMC	Y (1)	Y (5)
CRDM #32 Temperature Sensor	30JDA32CT801	30UJA11001	H	H	RT	SI	S	1E	EMC	Y (1)	Y (5)
CRDM #33 Operating Coil	30JDA33AE	30UJA11001	H	H		SII	NS-AQ		EMC	Y (1)	Y (5)
CRDM #33 Position Sensor	30JDA33CG801	30UJA11001	H	H	RT	SI	S	1E	EMC	Y (1)	Y (5)

Table 3.11-1—List of Environmentally Qualified Electrical/I&C Equipment (Sheet 6 of 130)

Name Tag (Equipment Description)	Tag Number	Local Area KKS ID (Room Location)	EQ Environment (Note 1)	Radiation Environment Zone (Note 2)	EQ Designated Function (Note 3)		Safety Class (Note 4)			EQ Program Designation (Note 5)	
CRDM #33 Top Position Limit Sensor	30JDA33CG802	30UJA11001	H	H		SII	NS-AQ		EMC	Y (1)	Y (5)
CRDM #33 Bottom Position Limit Sensor	30JDA33CG803	30UJA11001	H	H		SI	S	1E	EMC	Y (1)	Y (5)
CRDM #33 Temperature Sensor	30JDA33CT801	30UJA11001	H	H	RT	SI	S	1E	EMC	Y (1)	Y (5)
CRDM #34 Operating Coil	30JDA34AE	30UJA11001	H	H		SII	NS-AQ		EMC	Y (1)	Y (5)
CRDM #34 Position Sensor	30JDA34CG801	30UJA11001	H	H	RT	SI	S	1E	EMC	Y (1)	Y (5)
CRDM #34 Top Position Limit Sensor	30JDA34CG802	30UJA11001	H	H		SII	NS-AQ		EMC	Y (1)	Y (5)
CRDM #34 Bottom Position Limit Sensor	30JDA34CG803	30UJA11001	H	H		SI	S	1E	EMC	Y (1)	Y (5)
CRDM #34 Temperature Sensor	30JDA34CT801	30UJA11001	H	H	RT	SI	S	1E	EMC	Y (1)	Y (5)
CRDM #35 Operating Coil	30JDA35AE	30UJA11001	H	H		SII	NS-AQ		EMC	Y (1)	Y (5)
CRDM #35 Position Sensor	30JDA35CG801	30UJA11001	H	H	RT	SI	S	1E	EMC	Y (1)	Y (5)
CRDM #35 Top Position Limit Sensor	30JDA35CG802	30UJA11001	H	H		SII	NS-AQ		EMC	Y (1)	Y (5)
CRDM #35 Bottom Position Limit Sensor	30JDA35CG803	30UJA11001	H	H		SI	S	1E	EMC	Y (1)	Y (5)
CRDM #35 Temperature Sensor	30JDA35CT801	30UJA11001	H	H	RT	SI	S	1E	EMC	Y (1)	Y (5)
CRDM #36 Operating Coil	30JDA36AE	30UJA11001	H	H		SII	NS-AQ		EMC	Y (1)	Y (5)
CRDM #36 Position Sensor	30JDA36CG801	30UJA11001	H	H	RT	SI	S	1E	EMC	Y (1)	Y (5)
CRDM #36 Top Position Limit Sensor	30JDA36CG802	30UJA11001	H	H		SII	NS-AQ		EMC	Y (1)	Y (5)
CRDM #36 Bottom Position Limit Sensor	30JDA36CG803	30UJA11001	H	H		SI	S	1E	EMC	Y (1)	Y (5)
CRDM #36 Temperature Sensor	30JDA36CT801	30UJA11001	H	H	RT	SI	S	1E	EMC	Y (1)	Y (5)
CRDM #37 Operating Coil	30JDA37AE	30UJA11001	H	H		SII	NS-AQ		EMC	Y (1)	Y (5)
CRDM #37 Position Sensor	30JDA37CG801	30UJA11001	H	H	RT	SI	S	1E	EMC	Y (1)	Y (5)
CRDM #37 Top Position Limit Sensor	30JDA37CG802	30UJA11001	H	H		SII	NS-AQ		EMC	Y (1)	Y (5)
CRDM #37 Bottom Position Limit Sensor	30JDA37CG803	30UJA11001	H	H		SI	S	1E	EMC	Y (1)	Y (5)
CRDM #37 Temperature Sensor	30JDA37CT801	30UJA11001	H	H	RT	SI	S	1E	EMC	Y (1)	Y (5)
CRDM #38 Operating Coil	30JDA38AE	30UJA11001	H	H		SII	NS-AQ		EMC	Y (1)	Y (5)
CRDM #38 Position Sensor	30JDA38CG801	30UJA11001	H	H	RT	SI	S	1E	EMC	Y (1)	Y (5)
CRDM #38 Top Position Limit Sensor	30JDA38CG802	30UJA11001	H	H		SII	NS-AQ		EMC	Y (1)	Y (5)
CRDM #38 Bottom Position Limit Sensor	30JDA38CG803	30UJA11001	H	H		SI	S	1E	EMC	Y (1)	Y (5)
CRDM #38 Temperature Sensor	30JDA38CT801	30UJA11001	H	H	RT	SI	S	1E	EMC	Y (1)	Y (5)
CRDM #39 Operating Coil	30JDA39AE	30UJA11001	H	H		SII	NS-AQ		EMC	Y (1)	Y (5)
CRDM #39 Position Sensor	30JDA39CG801	30UJA11001	H	H	RT	SI	S	1E	EMC	Y (1)	Y (5)
CRDM #39 Top Position Limit Sensor	30JDA39CG802	30UJA11001	H	H		SII	NS-AQ		EMC	Y (1)	Y (5)
CRDM #39 Bottom Position Limit Sensor	30JDA39CG803	30UJA11001	H	H		SI	S	1E	EMC	Y (1)	Y (5)
CRDM #39 Temperature Sensor	30JDA39CT801	30UJA11001	H	H	RT	SI	S	1E	EMC	Y (1)	Y (5)

Table 3.11-1—List of Environmentally Qualified Electrical/I&C Equipment (Sheet 7 of 130)

Name Tag (Equipment Description)	Tag Number	Local Area KKS ID (Room Location)	EQ Environment (Note 1)	Radiation Environment Zone (Note 2)	EQ Designated Function (Note 3)		Safety Class (Note 4)			EQ Program Designation (Note 5)	
CRDM #40 Operating Coil	30JDA40AE	30UJA11001	H	H		SII	NS-AQ		EMC	Y (1)	Y (5)
CRDM #40 Position Sensor	30JDA40CG801	30UJA11001	H	H	RT	SI	S	1E	EMC	Y (1)	Y (5)
CRDM #40 Top Position Limit Sensor	30JDA40CG802	30UJA11001	H	H		SII	NS-AQ		EMC	Y (1)	Y (5)
CRDM #40 Bottom Position Limit Sensor	30JDA40CG803	30UJA11001	H	H		SI	S	1E	EMC	Y (1)	Y (5)
CRDM #40 Temperature Sensor	30JDA40CT801	30UJA11001	H	H	RT	SI	S	1E	EMC	Y (1)	Y (5)
CRDM #41 Operating Coil	30JDA41AE	30UJA11001	H	H		SII	NS-AQ		EMC	Y (1)	Y (5)
CRDM #41 Position Sensor	30JDA41CG801	30UJA11001	H	H	RT	SI	S	1E	EMC	Y (1)	Y (5)
CRDM #41 Top Position Limit Sensor	30JDA41CG802	30UJA11001	H	H		SII	NS-AQ		EMC	Y (1)	Y (5)
CRDM #41 Bottom Position Limit Sensor	30JDA41CG803	30UJA11001	H	H		SI	S	1E	EMC	Y (1)	Y (5)
CRDM #41 Temperature Sensor	30JDA41CT801	30UJA11001	H	H	RT	SI	S	1E	EMC	Y (1)	Y (5)
CRDM #42 Operating Coil	30JDA42AE	30UJA11001	H	H		SII	NS-AQ		EMC	Y (1)	Y (5)
CRDM #42 Position Sensor	30JDA42CG801	30UJA11001	H	H	RT	SI	S	1E	EMC	Y (1)	Y (5)
CRDM #42 Top Position Limit Sensor	30JDA42CG802	30UJA11001	H	H		SII	NS-AQ		EMC	Y (1)	Y (5)
CRDM #42 Bottom Position Limit Sensor	30JDA42CG803	30UJA11001	H	H		SI	S	1E	EMC	Y (1)	Y (5)
CRDM #42 Temperature Sensor	30JDA42CT801	30UJA11001	H	H	RT	SI	S	1E	EMC	Y (1)	Y (5)
CRDM #43 Operating Coil	30JDA43AE	30UJA11001	H	H		SII	NS-AQ		EMC	Y (1)	Y (5)
CRDM #43 Position Sensor	30JDA43CG801	30UJA11001	H	H	RT	SI	S	1E	EMC	Y (1)	Y (5)
CRDM #43 Top Position Limit Sensor	30JDA43CG802	30UJA11001	H	H		SII	NS-AQ		EMC	Y (1)	Y (5)
CRDM #43 Bottom Position Limit Sensor	30JDA43CG803	30UJA11001	H	H		SI	S	1E	EMC	Y (1)	Y (5)
CRDM #43 Temperature Sensor	30JDA43CT801	30UJA11001	H	H	RT	SI	S	1E	EMC	Y (1)	Y (5)
CRDM #44 Operating Coil	30JDA44AE	30UJA11001	H	H		SII	NS-AQ		EMC	Y (1)	Y (5)
CRDM #44 Position Sensor	30JDA44CG801	30UJA11001	H	H	RT	SI	S	1E	EMC	Y (1)	Y (5)
CRDM #44 Top Position Limit Sensor	30JDA44CG802	30UJA11001	H	H		SII	NS-AQ		EMC	Y (1)	Y (5)
CRDM #44 Bottom Position Limit Sensor	30JDA44CG803	30UJA11001	H	H		SI	S	1E	EMC	Y (1)	Y (5)
CRDM #44 Temperature Sensor	30JDA44CT801	30UJA11001	H	H	RT	SI	S	1E	EMC	Y (1)	Y (5)
CRDM #45 Operating Coil	30JDA45AE	30UJA11001	H	H		SII	NS-AQ		EMC	Y (1)	Y (5)
CRDM #45 Position Sensor	30JDA45CG801	30UJA11001	H	H	RT	SI	S	1E	EMC	Y (1)	Y (5)
CRDM #45 Top Position Limit Sensor	30JDA45CG802	30UJA11001	H	H		SII	NS-AQ		EMC	Y (1)	Y (5)
CRDM #45 Bottom Position Limit Sensor	30JDA45CG803	30UJA11001	H	H		SI	S	1E	EMC	Y (1)	Y (5)
CRDM #45 Temperature Sensor	30JDA45CT801	30UJA11001	H	H	RT	SI	S	1E	EMC	Y (1)	Y (5)
CRDM #46 Operating Coil	30JDA46AE	30UJA11001	H	H		SII	NS-AQ		EMC	Y (1)	Y (5)
CRDM #46 Position Sensor	30JDA46CG801	30UJA11001	H	H	RT	SI	S	1E	EMC	Y (1)	Y (5)
CRDM #46 Top Position Limit Sensor	30JDA46CG802	30UJA11001	H	H		SII	NS-AQ		EMC	Y (1)	Y (5)

Table 3.11-1—List of Environmentally Qualified Electrical/I&C Equipment (Sheet 8 of 130)

Name Tag (Equipment Description)	Tag Number	Local Area KKS ID (Room Location)	EQ Environment (Note 1)	Radiation Environment Zone (Note 2)	EQ Designated Function (Note 3)	Safety Class (Note 4)			EQ Program Designation (Note 5)	
CRDM #46 Bottom Position Limit Sensor	30JDA46CG803	30UJA11001	H	H		SI	S	1E	EMC	Y (1)	Y (5)
CRDM #46 Temperature Sensor	30JDA46CT801	30UJA11001	H	H	RT	SI	S	1E	EMC	Y (1)	Y (5)
CRDM #47 Operating Coil	30JDA47AE	30UJA11001	H	H		SII	NS-AQ		EMC	Y (1)	Y (5)
CRDM #47 Position Sensor	30JDA47CG801	30UJA11001	H	H	RT	SI	S	1E	EMC	Y (1)	Y (5)
CRDM #47 Top Position Limit Sensor	30JDA47CG802	30UJA11001	H	H		SII	NS-AQ		EMC	Y (1)	Y (5)
CRDM #47 Bottom Position Limit Sensor	30JDA47CG803	30UJA11001	H	H		SI	S	1E	EMC	Y (1)	Y (5)
CRDM #47 Temperature Sensor	30JDA47CT801	30UJA11001	H	H	RT	SI	S	1E	EMC	Y (1)	Y (5)
CRDM #51 Operating Coil	30JDA51AE	30UJA11001	H	H		SII	NS-AQ		EMC	Y (1)	Y (5)
CRDM #51 Position Sensor	30JDA51CG801	30UJA11001	H	H	RT	SI	S	1E	EMC	Y (1)	Y (5)
CRDM #51 Top Position Limit Sensor	30JDA51CG802	30UJA11001	H	H		SII	NS-AQ		EMC	Y (1)	Y (5)
CRDM #51 Bottom Position Limit Sensor	30JDA51CG803	30UJA11001	H	H		SI	S	1E	EMC	Y (1)	Y (5)
CRDM #51 Temperature Sensor	30JDA51CT801	30UJA11001	H	H	RT	SI	S	1E	EMC	Y (1)	Y (5)
CRDM #52 Operating Coil	30JDA52AE	30UJA11001	H	H		SII	NS-AQ		EMC	Y (1)	Y (5)
CRDM #52 Position Sensor	30JDA52CG801	30UJA11001	H	H	RT	SI	S	1E	EMC	Y (1)	Y (5)
CRDM #52 Top Position Limit Sensor	30JDA52CG802	30UJA11001	H	H		SII	NS-AQ		EMC	Y (1)	Y (5)
CRDM #52 Bottom Position Limit Sensor	30JDA52CG803	30UJA11001	H	H		SI	S	1E	EMC	Y (1)	Y (5)
CRDM #52 Temperature Sensor	30JDA52CT801	30UJA11001	H	H	RT	SI	S	1E	EMC	Y (1)	Y (5)
CRDM #53 Operating Coil	30JDA53AE	30UJA11001	H	H		SII	NS-AQ		EMC	Y (1)	Y (5)
CRDM #53 Position Sensor	30JDA53CG801	30UJA11001	H	H	RT	SI	S	1E	EMC	Y (1)	Y (5)
CRDM #53 Top Position Limit Sensor	30JDA53CG802	30UJA11001	H	H		SII	NS-AQ		EMC	Y (1)	Y (5)
CRDM #53 Bottom Position Limit Sensor	30JDA53CG803	30UJA11001	H	H		SI	S	1E	EMC	Y (1)	Y (5)
CRDM #53 Temperature Sensor	30JDA53CT801	30UJA11001	H	H	RT	SI	S	1E	EMC	Y (1)	Y (5)
CRDM #54 Operating Coil	30JDA54AE	30UJA11001	H	H		SII	NS-AQ		EMC	Y (1)	Y (5)
CRDM #54 Position Sensor	30JDA54CG801	30UJA11001	H	H	RT	SI	S	1E	EMC	Y (1)	Y (5)
CRDM #54 Top Position Limit Sensor	30JDA54CG802	30UJA11001	H	H		SII	NS-AQ		EMC	Y (1)	Y (5)
CRDM #54 Bottom Position Limit Sensor	30JDA54CG803	30UJA11001	H	H		SI	S	1E	EMC	Y (1)	Y (5)
CRDM #54 Temperature Sensor	30JDA54CT801	30UJA11001	H	H	RT	SI	S	1E	EMC	Y (1)	Y (5)
CRDM #55 Operating Coil	30JDA55AE	30UJA11001	H	H		SII	NS-AQ		EMC	Y (1)	Y (5)
CRDM #55 Position Sensor	30JDA55CG801	30UJA11001	H	H	RT	SI	S	1E	EMC	Y (1)	Y (5)
CRDM #55 Top Position Limit Sensor	30JDA55CG802	30UJA11001	H	H		SII	NS-AQ		EMC	Y (1)	Y (5)
CRDM #55 Bottom Position Limit Sensor	30JDA55CG803	30UJA11001	H	H		SI	S	1E	EMC	Y (1)	Y (5)
CRDM #55 Temperature Sensor	30JDA55CT801	30UJA11001	H	H	RT	SI	S	1E	EMC	Y (1)	Y (5)
CRDM #56 Operating Coil	30JDA56AE	30UJA11001	H	H		SII	NS-AQ		EMC	Y (1)	Y (5)

Table 3.11-1—List of Environmentally Qualified Electrical/I&C Equipment (Sheet 9 of 130)

Name Tag (Equipment Description)	Tag Number	Local Area KKS ID (Room Location)	EQ Environment (Note 1)	Radiation Environment Zone (Note 2)	EQ Designated Function (Note 3)	Safety Class (Note 4)	EQ Program Designation (Note 5)
CRDM #56 Position Sensor	30JDA56CG801	30UJA11001	H	H	RT SI	S 1E EMC	Y (1) Y (5)
CRDM #56 Top Position Limit Sensor	30JDA56CG802	30UJA11001	H	H	SII	NS-AQ EMC	Y (1) Y (5)
CRDM #56 Bottom Position Limit Sensor	30JDA56CG803	30UJA11001	H	H	SI	S 1E EMC	Y (1) Y (5)
CRDM #56 Temperature Sensor	30JDA56CT801	30UJA11001	H	H	RT SI	S 1E EMC	Y (1) Y (5)
CRDM #57 Operating Coil	30JDA57AE	30UJA11001	H	H	SII	NS-AQ EMC	Y (1) Y (5)
CRDM #57 Position Sensor	30JDA57CG801	30UJA11001	H	H	RT SI	S 1E EMC	Y (1) Y (5)
CRDM #57 Top Position Limit Sensor	30JDA57CG802	30UJA11001	H	H	SII	NS-AQ EMC	Y (1) Y (5)
CRDM #57 Bottom Position Limit Sensor	30JDA57CG803	30UJA11001	H	H	SI	S 1E EMC	Y (1) Y (5)
CRDM #57 Temperature Sensor	30JDA57CT801	30UJA11001	H	H	RT SI	S 1E EMC	Y (1) Y (5)
CRDM #58 Operating Coil	30JDA58AE	30UJA11001	H	H	SII	NS-AQ EMC	Y (1) Y (5)
CRDM #58 Position Sensor	30JDA58CG801	30UJA11001	H	H	RT SI	S 1E EMC	Y (1) Y (5)
CRDM #58 Top Position Limit Sensor	30JDA58CG802	30UJA11001	H	H	SII	NS-AQ EMC	Y (1) Y (5)
CRDM #58 Bottom Position Limit Sensor	30JDA58CG803	30UJA11001	H	H	SI	S 1E EMC	Y (1) Y (5)
CRDM #58 Temperature Sensor	30JDA58CT801	30UJA11001	H	H	RT SI	S 1E EMC	Y (1) Y (5)
CRDM #59 Operating Coil	30JDA59AE	30UJA11001	H	H	SII	NS-AQ EMC	Y (1) Y (5)
CRDM #59 Position Sensor	30JDA59CG801	30UJA11001	H	H	RT SI	S 1E EMC	Y (1) Y (5)
CRDM #59 Top Position Limit Sensor	30JDA59CG802	30UJA11001	H	H	SII	NS-AQ EMC	Y (1) Y (5)
CRDM #59 Bottom Position Limit Sensor	30JDA59CG803	30UJA11001	H	H	SI	S 1E EMC	Y (1) Y (5)
CRDM #59 Temperature Sensor	30JDA59CT801	30UJA11001	H	H	RT SI	S 1E EMC	Y (1) Y (5)
CRDM #60 Operating Coil	30JDA60AE	30UJA11001	H	H	SII	NS-AQ EMC	Y (1) Y (5)
CRDM #60 Position Sensor	30JDA60CG801	30UJA11001	H	H	RT SI	S 1E EMC	Y (1) Y (5)
CRDM #60 Top Position Limit Sensor	30JDA60CG802	30UJA11001	H	H	SII	NS-AQ EMC	Y (1) Y (5)
CRDM #60 Bottom Position Limit Sensor	30JDA60CG803	30UJA11001	H	H	SI	S 1E EMC	Y (1) Y (5)
CRDM #60 Temperature Sensor	30JDA60CT801	30UJA11001	H	H	RT SI	S 1E EMC	Y (1) Y (5)
CRDM #61 Operating Coil	30JDA61AE	30UJA11001	H	H	SII	NS-AQ EMC	Y (1) Y (5)
CRDM #61 Position Sensor	30JDA61CG801	30UJA11001	H	H	RT SI	S 1E EMC	Y (1) Y (5)
CRDM #61 Top Position Limit Sensor	30JDA61CG802	30UJA11001	H	H	SII	NS-AQ EMC	Y (1) Y (5)
CRDM #61 Bottom Position Limit Sensor	30JDA61CG803	30UJA11001	H	H	SI	S 1E EMC	Y (1) Y (5)
CRDM #61 Temperature Sensor	30JDA61CT801	30UJA11001	H	H	RT SI	S 1E EMC	Y (1) Y (5)
CRDM #62 Operating Coil	30JDA62AE	30UJA11001	H	H	SII	NS-AQ EMC	Y (1) Y (5)
CRDM #62 Position Sensor	30JDA62CG801	30UJA11001	H	H	RT SI	S 1E EMC	Y (1) Y (5)
CRDM #62 Top Position Limit Sensor	30JDA62CG802	30UJA11001	H	H	SII	NS-AQ EMC	Y (1) Y (5)
CRDM #62 Bottom Position Limit Sensor	30JDA62CG803	30UJA11001	H	H	SI	S 1E EMC	Y (1) Y (5)

Table 3.11-1—List of Environmentally Qualified Electrical/I&C Equipment (Sheet 10 of 130)

Name Tag (Equipment Description)	Tag Number	Local Area KKS ID (Room Location)	EQ Environment (Note 1)	Radiation Environment Zone (Note 2)	EQ Designated Function (Note 3)	Safety Class (Note 4)	EQ Program Designation (Note 5)
CRDM #62 Temperature Sensor	30JDA62CT801	30UJA11001	H	H	RT SI	S 1E EMC	Y (1) Y (5)
CRDM #63 Operating Coil	30JDA63AE	30UJA11001	H	H	SII	NS-AQ EMC	Y (1) Y (5)
CRDM #63 Position Sensor	30JDA63CG801	30UJA11001	H	H	RT SI	S 1E EMC	Y (1) Y (5)
CRDM #63 Top Position Limit Sensor	30JDA63CG802	30UJA11001	H	H	SII	NS-AQ EMC	Y (1) Y (5)
CRDM #63 Bottom Position Limit Sensor	30JDA63CG803	30UJA11001	H	H	SI	S 1E EMC	Y (1) Y (5)
CRDM #63 Temperature Sensor	30JDA63CT801	30UJA11001	H	H	RT SI	S 1E EMC	Y (1) Y (5)
CRDM #64 Operating Coil	30JDA64AE	30UJA11001	H	H	SII	NS-AQ EMC	Y (1) Y (5)
CRDM #64 Position Sensor	30JDA64CG801	30UJA11001	H	H	RT SI	S 1E EMC	Y (1) Y (5)
CRDM #64 Top Position Limit Sensor	30JDA64CG802	30UJA11001	H	H	SII	NS-AQ EMC	Y (1) Y (5)
CRDM #64 Bottom Position Limit Sensor	30JDA64CG803	30UJA11001	H	H	SI	S 1E EMC	Y (1) Y (5)
CRDM #64 Temperature Sensor	30JDA64CT801	30UJA11001	H	H	RT SI	S 1E EMC	Y (1) Y (5)
CRDM #65 Operating Coil	30JDA65AE	30UJA11001	H	H	SII	NS-AQ EMC	Y (1) Y (5)
CRDM #65 Position Sensor	30JDA65CG801	30UJA11001	H	H	RT SI	S 1E EMC	Y (1) Y (5)
CRDM #65 Top Position Limit Sensor	30JDA65CG802	30UJA11001	H	H	SII	NS-AQ EMC	Y (1) Y (5)
CRDM #65 Bottom Position Limit Sensor	30JDA65CG803	30UJA11001	H	H	SI	S 1E EMC	Y (1) Y (5)
CRDM #65 Temperature Sensor	30JDA65CT801	30UJA11001	H	H	RT SI	S 1E EMC	Y (1) Y (5)
CRDM #66 Operating Coil	30JDA66AE	30UJA11001	H	H	SII	NS-AQ EMC	Y (1) Y (5)
CRDM #66 Position Sensor	30JDA66CG801	30UJA11001	H	H	RT SI	S 1E EMC	Y (1) Y (5)
CRDM #66 Top Position Limit Sensor	30JDA66CG802	30UJA11001	H	H	SII	NS-AQ EMC	Y (1) Y (5)
CRDM #66 Bottom Position Limit Sensor	30JDA66CG803	30UJA11001	H	H	SI	S 1E EMC	Y (1) Y (5)
CRDM #66 Temperature Sensor	30JDA66CT801	30UJA11001	H	H	RT SI	S 1E EMC	Y (1) Y (5)
CRDM #67 Operating Coil	30JDA67AE	30UJA11001	H	H	SII	NS-AQ EMC	Y (1) Y (5)
CRDM #67 Position Sensor	30JDA67CG801	30UJA11001	H	H	RT SI	S 1E EMC	Y (1) Y (5)
CRDM #67 Top Position Limit Sensor	30JDA67CG802	30UJA11001	H	H	SII	NS-AQ EMC	Y (1) Y (5)
CRDM #67 Bottom Position Limit Sensor	30JDA67CG803	30UJA11001	H	H	SI	S 1E EMC	Y (1) Y (5)
CRDM #67 Temperature Sensor	30JDA67CT801	30UJA11001	H	H	RT SI	S 1E EMC	Y (1) Y (5)
CRDM #68 Operating Coil	30JDA68AE	30UJA11001	H	H	SII	NS-AQ EMC	Y (1) Y (5)
CRDM #68 Position Sensor	30JDA68CG801	30UJA11001	H	H	RT SI	S 1E EMC	Y (1) Y (5)
CRDM #68 Top Position Limit Sensor	30JDA68CG802	30UJA11001	H	H	SII	NS-AQ EMC	Y (1) Y (5)
CRDM #68 Bottom Position Limit Sensor	30JDA68CG803	30UJA11001	H	H	SI	S 1E EMC	Y (1) Y (5)
CRDM #68 Temperature Sensor	30JDA68CT801	30UJA11001	H	H	RT SI	S 1E EMC	Y (1) Y (5)
CRDM #69 Operating Coil	30JDA69AE	30UJA11001	H	H	SII	NS-AQ EMC	Y (1) Y (5)
CRDM #69 Position Sensor	30JDA69CG801	30UJA11001	H	H	RT SI	S 1E EMC	Y (1) Y (5)

Table 3.11-1—List of Environmentally Qualified Electrical/I&C Equipment (Sheet 11 of 130)

Name Tag (Equipment Description)	Tag Number	Local Area KKS ID (Room Location)	EQ Environment (Note 1)	Radiation Environment Zone (Note 2)	EQ Designated Function (Note 3)		Safety Class (Note 4)			EQ Program Designation (Note 5)	
CRDM #69 Top Position Limit Sensor	30JDA69CG802	30UJA11001	H	H		SII	NS-AQ		EMC	Y (1)	Y (5)
CRDM #69 Bottom Position Limit Sensor	30JDA69CG803	30UJA11001	H	H		SI	S	1E	EMC	Y (1)	Y (5)
CRDM #69 Temperature Sensor	30JDA69CT801	30UJA11001	H	H	RT	SI	S	1E	EMC	Y (1)	Y (5)
CRDM #70 Operating Coil	30JDA70AE	30UJA11001	H	H		SII	NS-AQ		EMC	Y (1)	Y (5)
CRDM #70 Position Sensor	30JDA70CG801	30UJA11001	H	H	RT	SI	S	1E	EMC	Y (1)	Y (5)
CRDM #70 Top Position Limit Sensor	30JDA70CG802	30UJA11001	H	H		SII	NS-AQ		EMC	Y (1)	Y (5)
CRDM #70 Bottom Position Limit Sensor	30JDA70CG803	30UJA11001	H	H		SI	S	1E	EMC	Y (1)	Y (5)
CRDM #70 Temperature Sensor	30JDA70CT801	30UJA11001	H	H	RT	SI	S	1E	EMC	Y (1)	Y (5)
CRDM #71 Operating Coil	30JDA71AE	30UJA11001	H	H		SII	NS-AQ		EMC	Y (1)	Y (5)
CRDM #71 Position Sensor	30JDA71CG801	30UJA11001	H	H	RT	SI	S	1E	EMC	Y (1)	Y (5)
CRDM #71 Top Position Limit Sensor	30JDA71CG802	30UJA11001	H	H		SII	NS-AQ		EMC	Y (1)	Y (5)
CRDM #71 Bottom Position Limit Sensor	30JDA71CG803	30UJA11001	H	H		SI	S	1E	EMC	Y (1)	Y (5)
CRDM #71 Temperature Sensor	30JDA71CT801	30UJA11001	H	H	RT	SI	S	1E	EMC	Y (1)	Y (5)
CRDM #72 Operating Coil	30JDA72AE	30UJA11001	H	H		SII	NS-AQ		EMC	Y (1)	Y (5)
CRDM #72 Position Sensor	30JDA72CG801	30UJA11001	H	H	RT	SI	S	1E	EMC	Y (1)	Y (5)
CRDM #72 Top Position Limit Sensor	30JDA72CG802	30UJA11001	H	H		SII	NS-AQ		EMC	Y (1)	Y (5)
CRDM #72 Bottom Position Limit Sensor	30JDA72CG803	30UJA11001	H	H		SI	S	1E	EMC	Y (1)	Y (5)
CRDM #72 Temperature Sensor	30JDA72CT801	30UJA11001	H	H	RT	SI	S	1E	EMC	Y (1)	Y (5)
CRDM #76 Operating Coil	30JDA76AE	30UJA11001	H	H		SII	NS-AQ		EMC	Y (1)	Y (5)
CRDM #76 Position Sensor	30JDA76CG801	30UJA11001	H	H	RT	SI	S	1E	EMC	Y (1)	Y (5)
CRDM #76 Top Position Limit Sensor	30JDA76CG802	30UJA11001	H	H		SII	NS-AQ		EMC	Y (1)	Y (5)
CRDM #76 Bottom Position Limit Sensor	30JDA76CG803	30UJA11001	H	H		SI	S	1E	EMC	Y (1)	Y (5)
CRDM #76 Temperature Sensor	30JDA76CT801	30UJA11001	H	H	RT	SI	S	1E	EMC	Y (1)	Y (5)
CRDM #77 Operating Coil	30JDA77AE	30UJA11001	H	H		SII	NS-AQ		EMC	Y (1)	Y (5)
CRDM #77 Position Sensor	30JDA77CG801	30UJA11001	H	H	RT	SI	S	1E	EMC	Y (1)	Y (5)
CRDM #77 Top Position Limit Sensor	30JDA77CG802	30UJA11001	H	H		SII	NS-AQ		EMC	Y (1)	Y (5)
CRDM #77 Bottom Position Limit Sensor	30JDA77CG803	30UJA11001	H	H		SI	S	1E	EMC	Y (1)	Y (5)
CRDM #77 Temperature Sensor	30JDA77CT801	30UJA11001	H	H	RT	SI	S	1E	EMC	Y (1)	Y (5)
CRDM #78 Operating Coil	30JDA78AE	30UJA11001	H	H		SII	NS-AQ		EMC	Y (1)	Y (5)
CRDM #78 Position Sensor	30JDA78CG801	30UJA11001	H	H	RT	SI	S	1E	EMC	Y (1)	Y (5)
CRDM #78 Top Position Limit Sensor	30JDA78CG802	30UJA11001	H	H		SII	NS-AQ		EMC	Y (1)	Y (5)
CRDM #78 Bottom Position Limit Sensor	30JDA78CG803	30UJA11001	H	H		SI	S	1E	EMC	Y (1)	Y (5)
CRDM #78 Temperature Sensor	30JDA78CT801	30UJA11001	H	H	RT	SI	S	1E	EMC	Y (1)	Y (5)

Table 3.11-1—List of Environmentally Qualified Electrical/I&C Equipment (Sheet 12 of 130)

Name Tag (Equipment Description)	Tag Number	Local Area KKS ID (Room Location)	EQ Environment (Note 1)	Radiation Environment Zone (Note 2)	EQ Designated Function (Note 3)	Safety Class (Note 4)			EQ Program Designation (Note 5)	
CRDM #79 Operating Coil	30JDA79AE	30UJA11001	H	H		SII	NS-AQ	EMC	Y (1)	Y (5)
CRDM #79 Position Sensor	30JDA79CG801	30UJA11001	H	H	RT	SI	S	1E EMC	Y (1)	Y (5)
CRDM #79 Top Position Limit Sensor	30JDA79CG802	30UJA11001	H	H		SII	NS-AQ	EMC	Y (1)	Y (5)
CRDM #79 Bottom Position Limit Sensor	30JDA79CG803	30UJA11001	H	H		SI	S	1E EMC	Y (1)	Y (5)
CRDM #79 Temperature Sensor	30JDA79CT801	30UJA11001	H	H	RT	SI	S	1E EMC	Y (1)	Y (5)
CRDM #80 Operating Coil	30JDA80AE	30UJA11001	H	H		SII	NS-AQ	EMC	Y (1)	Y (5)
CRDM #80 Position Sensor	30JDA80CG801	30UJA11001	H	H	RT	SI	S	1E EMC	Y (1)	Y (5)
CRDM #80 Top Position Limit Sensor	30JDA80CG802	30UJA11001	H	H		SII	NS-AQ	EMC	Y (1)	Y (5)
CRDM #80 Bottom Position Limit Sensor	30JDA80CG803	30UJA11001	H	H		SI	S	1E EMC	Y (1)	Y (5)
CRDM #80 Temperature Sensor	30JDA80CT801	30UJA11001	H	H	RT	SI	S	1E EMC	Y (1)	Y (5)
CRDM #81 Operating Coil	30JDA81AE	30UJA11001	H	H		SII	NS-AQ	EMC	Y (1)	Y (5)
CRDM #81 Position Sensor	30JDA81CG801	30UJA11001	H	H	RT	SI	S	1E EMC	Y (1)	Y (5)
CRDM #81 Top Position Limit Sensor	30JDA81CG802	30UJA11001	H	H		SII	NS-AQ	EMC	Y (1)	Y (5)
CRDM #81 Bottom Position Limit Sensor	30JDA81CG803	30UJA11001	H	H		SI	S	1E EMC	Y (1)	Y (5)
CRDM #81 Temperature Sensor	30JDA81CT801	30UJA11001	H	H	RT	SI	S	1E EMC	Y (1)	Y (5)
CRDM #82 Operating Coil	30JDA82AE	30UJA11001	H	H		SII	NS-AQ	EMC	Y (1)	Y (5)
CRDM #82 Position Sensor	30JDA82CG801	30UJA11001	H	H	RT	SI	S	1E EMC	Y (1)	Y (5)
CRDM #82 Top Position Limit Sensor	30JDA82CG802	30UJA11001	H	H		SII	NS-AQ	EMC	Y (1)	Y (5)
CRDM #82 Bottom Position Limit Sensor	30JDA82CG803	30UJA11001	H	H		SI	S	1E EMC	Y (1)	Y (5)
CRDM #82 Temperature Sensor	30JDA82CT801	30UJA11001	H	H	RT	SI	S	1E EMC	Y (1)	Y (5)
CRDM #83 Operating Coil	30JDA83AE	30UJA11001	H	H		SII	NS-AQ	EMC	Y (1)	Y (5)
CRDM #83 Position Sensor	30JDA83CG801	30UJA11001	H	H	RT	SI	S	1E EMC	Y (1)	Y (5)
CRDM #83 Top Position Limit Sensor	30JDA83CG802	30UJA11001	H	H		SII	NS-AQ	EMC	Y (1)	Y (5)
CRDM #83 Bottom Position Limit Sensor	30JDA83CG803	30UJA11001	H	H		SI	S	1E EMC	Y (1)	Y (5)
CRDM #83 Temperature Sensor	30JDA83CT801	30UJA11001	H	H	RT	SI	S	1E EMC	Y (1)	Y (5)
CRDM #84 Operating Coil	30JDA84AE	30UJA11001	H	H		SII	NS-AQ	EMC	Y (1)	Y (5)
CRDM #84 Position Sensor	30JDA84CG801	30UJA11001	H	H	RT	SI	S	1E EMC	Y (1)	Y (5)
CRDM #84 Top Position Limit Sensor	30JDA84CG802	30UJA11001	H	H		SII	NS-AQ	EMC	Y (1)	Y (5)
CRDM #84 Bottom Position Limit Sensor	30JDA84CG803	30UJA11001	H	H		SI	S	1E EMC	Y (1)	Y (5)
CRDM #84 Temperature Sensor	30JDA84CT801	30UJA11001	H	H	RT	SI	S	1E EMC	Y (1)	Y (5)
CRDM #85 Operating Coil	30JDA85AE	30UJA11001	H	H		SII	NS-AQ	EMC	Y (1)	Y (5)
CRDM #85 Position Sensor	30JDA85CG801	30UJA11001	H	H	RT	SI	S	1E EMC	Y (1)	Y (5)
CRDM #85 Top Position Limit Sensor	30JDA85CG802	30UJA11001	H	H		SII	NS-AQ	EMC	Y (1)	Y (5)

Table 3.11-1—List of Environmentally Qualified Electrical/I&C Equipment (Sheet 13 of 130)

Name Tag (Equipment Description)	Tag Number	Local Area KKS ID (Room Location)	EQ Environment (Note 1)	Radiation Environment Zone (Note 2)	EQ Designated Function (Note 3)	Safety Class (Note 4)			EQ Program Designation (Note 5)	
CRDM #85 Bottom Position Limit Sensor	30JDA85CG803	30UJA11001	H	H	SI	S	1E	EMC	Y (1)	Y (5)
CRDM #85 Temperature Sensor	30JDA85CT801	30UJA11001	H	H	RT SI	S	1E	EMC	Y (1)	Y (5)
CRDM #86 Operating Coil	30JDA86AE	30UJA11001	H	H	SII	NS-AQ		EMC	Y (1)	Y (5)
CRDM #86 Position Sensor	30JDA86CG801	30UJA11001	H	H	RT SI	S	1E	EMC	Y (1)	Y (5)
CRDM #86 Top Position Limit Sensor	30JDA86CG802	30UJA11001	H	H	SII	NS-AQ		EMC	Y (1)	Y (5)
CRDM #86 Bottom Position Limit Sensor	30JDA86CG803	30UJA11001	H	H	SI	S	1E	EMC	Y (1)	Y (5)
CRDM #86 Temperature Sensor	30JDA86CT801	30UJA11001	H	H	RT SI	S	1E	EMC	Y (1)	Y (5)
CRDM #87 Operating Coil	30JDA87AE	30UJA11001	H	H	SII	NS-AQ		EMC	Y (1)	Y (5)
CRDM #87 Position Sensor	30JDA87CG801	30UJA11001	H	H	RT SI	S	1E	EMC	Y (1)	Y (5)
CRDM #87 Top Position Limit Sensor	30JDA87CG802	30UJA11001	H	H	SII	NS-AQ		EMC	Y (1)	Y (5)
CRDM #87 Bottom Position Limit Sensor	30JDA87CG803	30UJA11001	H	H	SI	S	1E	EMC	Y (1)	Y (5)
CRDM #87 Temperature Sensor	30JDA87CT801	30UJA11001	H	H	RT SI	S	1E	EMC	Y (1)	Y (5)
CRDM #88 Operating Coil	30JDA88AE	30UJA11001	H	H	SII	NS-AQ		EMC	Y (1)	Y (5)
CRDM #88 Position Sensor	30JDA88CG801	30UJA11001	H	H	RT SI	S	1E	EMC	Y (1)	Y (5)
CRDM #88 Top Position Limit Sensor	30JDA88CG802	30UJA11001	H	H	SII	NS-AQ		EMC	Y (1)	Y (5)
CRDM #88 Bottom Position Limit Sensor	30JDA88CG803	30UJA11001	H	H	SI	S	1E	EMC	Y (1)	Y (5)
CRDM #88 Temperature Sensor	30JDA88CT801	30UJA11001	H	H	RT SI	S	1E	EMC	Y (1)	Y (5)
CRDM #89 Operating Coil	30JDA89AE	30UJA11001	H	H	SII	NS-AQ		EMC	Y (1)	Y (5)
CRDM #89 Position Sensor	30JDA89CG801	30UJA11001	H	H	RT SI	S	1E	EMC	Y (1)	Y (5)
CRDM #89 Top Position Limit Sensor	30JDA89CG802	30UJA11001	H	H	SII	NS-AQ		EMC	Y (1)	Y (5)
CRDM #89 Bottom Position Limit Sensor	30JDA89CG803	30UJA11001	H	H	SI	S	1E	EMC	Y (1)	Y (5)
CRDM #89 Temperature Sensor	30JDA89CT801	30UJA11001	H	H	RT SI	S	1E	EMC	Y (1)	Y (5)
CRDM #90 Operating Coil	30JDA90AE	30UJA11001	H	H	SII	NS-AQ		EMC	Y (1)	Y (5)
CRDM #90 Position Sensor	30JDA90CG801	30UJA11001	H	H	RT SI	S	1E	EMC	Y (1)	Y (5)
CRDM #90 Top Position Limit Sensor	30JDA90CG802	30UJA11001	H	H	SII	NS-AQ		EMC	Y (1)	Y (5)
CRDM #90 Bottom Position Limit Sensor	30JDA90CG803	30UJA11001	H	H	SI	S	1E	EMC	Y (1)	Y (5)
CRDM #90 Temperature Sensor	30JDA90CT801	30UJA11001	H	H	RT SI	S	1E	EMC	Y (1)	Y (5)
CRDM #91 Operating Coil	30JDA91AE	30UJA11001	H	H	SII	NS-AQ		EMC	Y (1)	Y (5)
CRDM #91 Position Sensor	30JDA91CG801	30UJA11001	H	H	RT SI	S	1E	EMC	Y (1)	Y (5)
CRDM #91 Top Position Limit Sensor	30JDA91CG802	30UJA11001	H	H	SII	NS-AQ		EMC	Y (1)	Y (5)
CRDM #91 Bottom Position Limit Sensor	30JDA91CG803	30UJA11001	H	H	SI	S	1E	EMC	Y (1)	Y (5)
CRDM #91 Temperature Sensor	30JDA91CT801	30UJA11001	H	H	RT SI	S	1E	EMC	Y (1)	Y (5)
CRDM #92 Operating Coil	30JDA92AE	30UJA11001	H	H	SII	NS-AQ		EMC	Y (1)	Y (5)

Table 3.11-1—List of Environmentally Qualified Electrical/I&C Equipment (Sheet 14 of 130)

Name Tag (Equipment Description)	Tag Number	Local Area KKS ID (Room Location)	EQ Environment (Note 1)	Radiation Environment Zone (Note 2)	EQ Designated Function (Note 3)	Safety Class (Note 4)	EQ Program Designation (Note 5)
CRDM #92 Position Sensor	30JDA92CG801	30UJA11001	H	H	RT SI	S 1E EMC	Y (1) Y (5)
CRDM #92 Top Position Limit Sensor	30JDA92CG802	30UJA11001	H	H	SII	NS-AQ EMC	Y (1) Y (5)
CRDM #92 Bottom Position Limit Sensor	30JDA92CG803	30UJA11001	H	H	SI	S 1E EMC	Y (1) Y (5)
CRDM #92 Temperature Sensor	30JDA92CT801	30UJA11001	H	H	RT SI	S 1E EMC	Y (1) Y (5)
CRDM #93 Operating Coil	30JDA93AE	30UJA11001	H	H	SII	NS-AQ EMC	Y (1) Y (5)
CRDM #93 Position Sensor	30JDA93CG801	30UJA11001	H	H	RT SI	S 1E EMC	Y (1) Y (5)
CRDM #93 Top Position Limit Sensor	30JDA93CG802	30UJA11001	H	H	SII	NS-AQ EMC	Y (1) Y (5)
CRDM #93 Bottom Position Limit Sensor	30JDA93CG803	30UJA11001	H	H	SI	S 1E EMC	Y (1) Y (5)
CRDM #93 Temperature Sensor	30JDA93CT801	30UJA11001	H	H	RT SI	S 1E EMC	Y (1) Y (5)
CRDM #94 Operating Coil	30JDA94AE	30UJA11001	H	H	SII	NS-AQ EMC	Y (1) Y (5)
CRDM #94 Position Sensor	30JDA94CG801	30UJA11001	H	H	RT SI	S 1E EMC	Y (1) Y (5)
CRDM #94 Top Position Limit Sensor	30JDA94CG802	30UJA11001	H	H	SII	NS-AQ EMC	Y (1) Y (5)
CRDM #94 Bottom Position Limit Sensor	30JDA94CG803	30UJA11001	H	H	SI	S 1E EMC	Y (1) Y (5)
CRDM #94 Temperature Sensor	30JDA94CT801	30UJA11001	H	H	RT SI	S 1E EMC	Y (1) Y (5)
CRDM #95 Operating Coil	30JDA95AE	30UJA11001	H	H	SII	NS-AQ EMC	Y (1) Y (5)
CRDM #95 Position Sensor	30JDA95CG801	30UJA11001	H	H	RT SI	S 1E EMC	Y (1) Y (5)
CRDM #95 Top Position Limit Sensor	30JDA95CG802	30UJA11001	H	H	SII	NS-AQ EMC	Y (1) Y (5)
CRDM #95 Bottom Position Limit Sensor	30JDA95CG803	30UJA11001	H	H	SI	S 1E EMC	Y (1) Y (5)
CRDM #95 Temperature Sensor	30JDA95CT801	30UJA11001	H	H	RT SI	S 1E EMC	Y (1) Y (5)
CRDM #96 Operating Coil	30JDA96AE	30UJA11001	H	H	SII	NS-AQ EMC	Y (1) Y (5)
CRDM #96 Position Sensor	30JDA96CG801	30UJA11001	H	H	RT SI	S 1E EMC	Y (1) Y (5)
CRDM #96 Top Position Limit Sensor	30JDA96CG802	30UJA11001	H	H	SII	NS-AQ EMC	Y (1) Y (5)
CRDM #96 Bottom Position Limit Sensor	30JDA96CG803	30UJA11001	H	H	SI	S 1E EMC	Y (1) Y (5)
CRDM #96 Temperature Sensor	30JDA96CT801	30UJA11001	H	H	RT SI	S 1E EMC	Y (1) Y (5)
CRDM #97 Operating Coil	30JDA97AE	30UJA11001	H	H	SII	NS-AQ EMC	Y (1) Y (5)
CRDM #97 Position Sensor	30JDA97CG801	30UJA11001	H	H	RT SI	S 1E EMC	Y (1) Y (5)
CRDM #97 Top Position Limit Sensor	30JDA97CG802	30UJA11001	H	H	SII	NS-AQ EMC	Y (1) Y (5)
CRDM #97 Bottom Position Limit Sensor	30JDA97CG803	30UJA11001	H	H	SI	S 1E EMC	Y (1) Y (5)
CRDM #97 Temperature Sensor	30JDA97CT801	30UJA11001	H	H	RT SI	S 1E EMC	Y (1) Y (5)
CRDM #99 Operating Coil	30JDA99AE	30UJA11001	H	H	SII	NS-AQ EMC	Y (1) Y (5)
CRDM #99 Position Sensor	30JDA99CG801	30UJA11001	H	H	RT SI	S 1E EMC	Y (1) Y (5)
CRDM #99 Top Position Limit Sensor	30JDA99CG802	30UJA11001	H	H	SII	NS-AQ EMC	Y (1) Y (5)
CRDM #99 Bottom Position Limit Sensor	30JDA99CG803	30UJA11001	H	H	SI	S 1E EMC	Y (1) Y (5)

Table 3.11-1—List of Environmentally Qualified Electrical/I&C Equipment (Sheet 15 of 130)

Name Tag (Equipment Description)	Tag Number	Local Area KKS ID (Room Location)	EQ Environment (Note 1)	Radiation Environment Zone (Note 2)	EQ Designated Function (Note 3)			Safety Class (Note 4)			EQ Program Designation (Note 5)	
CRDM #99 Temperature Sensor	30JDA99CT801	30UJA11001	H	H	RT		SI	S	1E	EMC	Y (1)	Y (5)
Steam Generator, Loop 1												
SG Sample Vlv Actuator Loop 1	30JEA10AA601	30UJA29003	H	H			SII	NS-AQ		EMC	Y (1)	Y (5)
Main Steam Flow Sensor #1 Loop 1	30JEA10CF030	30UJA34003	H	H			SII	NS-AQ		EMC	Y (1)	Y (5)
Main Steam Flow Sensor #2 Loop 1	30JEA10CF031	30UJA34003	H	H			SII	NS-AQ		EMC	Y (1)	Y (5)
Main Steam Flow Sensor #3 Loop 1	30JEA10CF032	30UJA34003	H	H			SII	NS-AQ		EMC	Y (1)	Y (5)
SG NR Level Sensor #1 Loop 1	30JEA10CL801	30UJA29003	H	H	RT		SI	S	1E	EMC	Y (1)	Y (5)
SG NR Level Sensor #2 Loop 1	30JEA10CL802	30UJA29003	H	H	RT		SI	S	1E	EMC	Y (1)	Y (5)
SG NR Level Sensor #3 Loop 1	30JEA10CL803	30UJA29003	H	H	RT		SI	S	1E	EMC	Y (1)	Y (5)
SG NR Level Sensor #4 Loop 1	30JEA10CL804	30UJA29003	H	H	RT		SI	S	1E	EMC	Y (1)	Y (5)
SG WR Level Sensor #1 Loop 1	30JEA10CL809	30UJA15003	H	H		PAM	SI	S	1E	EMC	Y (1)	Y (5)
SG WR Level Sensor #2 Loop 1	30JEA10CL810	30UJA15003	H	H		PAM	SI	S	1E	EMC	Y (1)	Y (5)
SG WR Level Sensor #3 Loop 1	30JEA10CL811	30UJA15003	H	H		PAM	SI	S	1E	EMC	Y (1)	Y (5)
SG WR Level Sensor #4 Loop 1	30JEA10CL812	30UJA15003	H	H		PAM	SI	S	1E	EMC	Y (1)	Y (5)
SG WR Level Sensor #5 Loop 1	30JEA10CL020	30UJA15003	H	H			SII	NS-AQ		EMC	Y (1)	Y (5)
Steam Generator, Loop 2												
SG Sample Vlv Actuator Loop 2	30JEA20AA601	30UJA29004	H	H			SII	NS-AQ		EMC	Y (1)	Y (5)
Main Steam Flow Sensor #1 Loop 2	30JEA20CF030	30UJA34004	H	H			SII	NS-AQ		EMC	Y (1)	Y (5)
Main Steam Flow Sensor #2 Loop 2	30JEA20CF031	30UJA34004	H	H			SII	NS-AQ		EMC	Y (1)	Y (5)
Main Steam Flow Sensor #3 Loop 2	30JEA20CF032	30UJA34004	H	H			SII	NS-AQ		EMC	Y (1)	Y (5)
SG NR Level Sensor #1 Loop 2	30JEA20CL801	30UJA29004	H	H	RT		SI	S	1E	EMC	Y (1)	Y (5)
SG NR Level Sensor #2 Loop 2	30JEA20CL802	30UJA29004	H	H	RT		SI	S	1E	EMC	Y (1)	Y (5)
SG NR Level Sensor #3 Loop 2	30JEA20CL803	30UJA29004	H	H	RT		SI	S	1E	EMC	Y (1)	Y (5)
SG NR Level Sensor #4 Loop 2	30JEA20CL804	30UJA29004	H	H	RT		SI	S	1E	EMC	Y (1)	Y (5)
SG WR Level Sensor #1 Loop 2	30JEA20CL809	30UJA15004	H	H		PAM	SI	S	1E	EMC	Y (1)	Y (5)
SG WR Level Sensor #2 Loop 2	30JEA20CL810	30UJA15004	H	H		PAM	SI	S	1E	EMC	Y (1)	Y (5)
SG WR Level Sensor #3 Loop 2	30JEA20CL811	30UJA15004	H	H		PAM	SI	S	1E	EMC	Y (1)	Y (5)
SG WR Level Sensor #4 Loop 2	30JEA20CL812	30UJA15004	H	H		PAM	SI	S	1E	EMC	Y (1)	Y (5)
SG WR Level Sensor #5 Loop 2	30JEA20CL020	30UJA15004	H	H			SII	NS-AQ		EMC	Y (1)	Y (5)
Steam Generator, Loop 3												
SG Sample Vlv Actuator Loop 3	30JEA30AA601	30UJA29007	H	H			SII	NS-AQ		EMC	Y (1)	Y (5)
Main Steam Flow Sensor #1 Loop 3	30JEA30CF030	30UJA34007	H	H			SII	NS-AQ		EMC	Y (1)	Y (5)

Table 3.11-1—List of Environmentally Qualified Electrical/I&C Equipment (Sheet 16 of 130)

Name Tag (Equipment Description)	Tag Number	Local Area KKS ID (Room Location)	EQ Environment (Note 1)	Radiation Environment Zone (Note 2)	EQ Designated Function (Note 3)			Safety Class (Note 4)			EQ Program Designation (Note 5)	
Main Steam Flow Sensor #2 Loop 3	30JEA30CF031	30UJA34007	H	H			SII	NS-AQ		EMC	Y (1)	Y (5)
Main Steam Flow Sensor #3 Loop 3	30JEA30CF032	30UJA34007	H	H			SII	NS-AQ		EMC	Y (1)	Y (5)
SG NR Level Sensor #1 Loop 3	30JEA30CL801	30UJA29007	H	H	RT		SI	S	1E	EMC	Y (1)	Y (5)
SG NR Level Sensor #2 Loop 3	30JEA30CL802	30UJA29007	H	H	RT		SI	S	1E	EMC	Y (1)	Y (5)
SG NR Level Sensor #3 Loop 3	30JEA30CL803	30UJA29007	H	H	RT		SI	S	1E	EMC	Y (1)	Y (5)
SG NR Level Sensor #4 Loop 3	30JEA30CL804	30UJA29007	H	H	RT		SI	S	1E	EMC	Y (1)	Y (5)
SG WR Level Sensor #1 Loop 3	30JEA30CL809	30UJA15007	H	H		PAM	SI	S	1E	EMC	Y (1)	Y (5)
SG WR Level Sensor #2 Loop 3	30JEA30CL810	30UJA15007	H	H		PAM	SI	S	1E	EMC	Y (1)	Y (5)
SG WR Level Sensor #3 Loop 3	30JEA30CL811	30UJA15007	H	H		PAM	SI	S	1E	EMC	Y (1)	Y (5)
SG WR Level Sensor #4 Loop 3	30JEA30CL812	30UJA15007	H	H		PAM	SI	S	1E	EMC	Y (1)	Y (5)
SG WR Level Sensor #5 Loop 3	30JEA30CL020	30UJA15007	H	H			SII	NS-AQ		EMC	Y (1)	Y (5)
Steam Generator, Loop 4												
SG Sample Vlv Actuator Loop 4	30JEA40AA601	30UJA29008	H	H			SII	NS-AQ		EMC	Y (1)	Y (5)
Main Steam Flow Sensor #1 Loop 4	30JEA40CF030	30UJA34008	H	H			SII	NS-AQ		EMC	Y (1)	Y (5)
Main Steam Flow Sensor #2 Loop 4	30JEA40CF031	30UJA34008	H	H			SII	NS-AQ		EMC	Y (1)	Y (5)
Main Steam Flow Sensor #3 Loop 4	30JEA40CF032	30UJA34008	H	H			SII	NS-AQ		EMC	Y (1)	Y (5)
SG NR Level Sensor #1 Loop 4	30JEA40CL801	30UJA29008	H	H	RT		SI	S	1E	EMC	Y (1)	Y (5)
SG NR Level Sensor #2 Loop 4	30JEA40CL802	30UJA29008	H	H	RT		SI	S	1E	EMC	Y (1)	Y (5)
SG NR Level Sensor #3 Loop 4	30JEA40CL803	30UJA29008	H	H	RT		SI	S	1E	EMC	Y (1)	Y (5)
SG NR Level Sensor #4 Loop 4	30JEA40CL804	30UJA29008	H	H	RT		SI	S	1E	EMC	Y (1)	Y (5)
SG WR Level Sensor #1 Loop 4	30JEA40CL809	30UJA15008	H	H		PAM	SI	S	1E	EMC	Y (1)	Y (5)
SG WR Level Sensor #2 Loop 4	30JEA40CL810	30UJA15008	H	H		PAM	SI	S	1E	EMC	Y (1)	Y (5)
SG WR Level Sensor #3 Loop 4	30JEA40CL811	30UJA15008	H	H		PAM	SI	S	1E	EMC	Y (1)	Y (5)
SG WR Level Sensor #4 Loop 4	30JEA40CL812	30UJA15008	H	H		PAM	SI	S	1E	EMC	Y (1)	Y (5)
SG WR Level Sensor #5 Loop 4	30JEA40CL020	30UJA15008	H	H			SII	NS-AQ		EMC	Y (1)	Y (5)
RCP, Loop 1												
RCP Motor Loop 1	30JEB10AP001	30UJA18002	H	H			SII	NS-AQ		EMC	Y (1)	Y (5)
TB Inlet Water Vlv Actuator Loop 1	30JEB10AA021	30UJA15002	H	H			SII	NS-AQ		EMC	Y (1)	Y (5)
TB Outlet Water Vlv Actuator Loop 1	30JEB10AA003	30UJA15002	H	H			SII	NS-AQ		EMC	Y (1)	Y (5)
RCP Seal #1 Leakoff Vlv Act Loop 1	30JEB10AA009	30UJA18002	H	H			SII	NS-AQ		EMC	Y (1)	Y (5)
RCP Seal #2 Tk Water Vlv Act Loop 1	30JEB10AA022	30UJA18003	H	H			SII	NS-AQ		EMC	Y (1)	Y (5)
RCP Seal #2 Leakoff Vlv Act Loop 1	30JEB10AA010	30UJA18002	H	H			SII	NS-AQ		EMC	Y (1)	Y (5)

Table 3.11-1—List of Environmentally Qualified Electrical/I&C Equipment (Sheet 17 of 130)

Name Tag (Equipment Description)	Tag Number	Local Area KKS ID (Room Location)	EQ Environment (Note 1)	Radiation Environment Zone (Note 2)	EQ Designated Function (Note 3)	Safety Class (Note 4)			EQ Program Designation (Note 5)		
RCP Seal #3 Inject Vlv Act Loop 1	30JEB10AA013	30UJA34014	H	H	SII	NS-AQ		EMC	Y (1)	Y (5)	
RCP Seal #3 Leakoff Vlv Act Loop 1	30JEB10AA017	30UJA15013	H	H	SII	NS-AQ		EMC	Y (1)	Y (5)	
SSSS Actuation Vlv Act Loop 1	30JEB10AA018	30UJA15002	H	H	SII	NS-AQ		EMC	Y (1)	Y (5)	
SSSS Atmos Vent Vlv Act Loop 1	30JEB10AA020	30UJA15002	H	H	SII	NS-AQ		EMC	Y (1)	Y (5)	
RCP-M Oil Lift Pump Motor Loop 1	30JEB10AP011	30UJA18002	H	H	SII	NS-AQ		EMC	Y (1)	Y (5)	
RCP-M Anti-Cond Heater Element Loop 1	30JEB10AH501	30UJA23002	H	H	SII	NS-AQ			Y (1)	Y (5)	
RCP TB Press Sensor Loop 1	30JEB10CP002	30UJA11002	H	H	SII	NS-AQ		EMC	Y (1)	Y (5)	
RCP TB Temp Sensor Loop 1	30JEB10CT007	30UJA11002	H	H	SII	NS-AQ		EMC	Y (1)	Y (5)	
RCP Seal #1 Diff Press Sensor #1 Loop 1	30JEB10CP065	30UJA11002	H	H	SII	NS-AQ		EMC	Y (1)	Y (5)	
RCP Seal #1 Diff Press Sensor #2 Loop 1	30JEB10CP567	30UJA18002	H	H	SII	NS-AQ		EMC	Y (1)	Y (5)	
RCP Seal #1 Temp Sensor #1 Loop 1	30JEB10CT002	30UJA11002	H	H	SII	NS-AQ		EMC	Y (1)	Y (5)	
RCP Seal #1 Temp Sensor #2 Loop 1	30JEB10CT003	30UJA11002	H	H	SII	NS-AQ		EMC	Y (1)	Y (5)	
RCP Seal #2 Tk Level Sensor #1 Loop 1	30JEB10CL065	30UJA11002	H	H	SII	NS-AQ		EMC	Y (1)	Y (5)	
RCP Seal #2 Tk Level Sensor #2 Loop 1	30JEB10CL066	30UJA11002	H	H	SII	NS-AQ		EMC	Y (1)	Y (5)	
RCP Seal #2 Leakoff Flowrate Sensor #1 Loop 1	30JEB10CF063	30UJA11002	H	H	SII	NS-AQ		EMC	Y (1)	Y (5)	
RCP Seal #2 Leakoff Flowrate Sensor #2 Loop 1	30JEB10CF064	30UJA11002	H	H	SII	NS-AQ		EMC	Y (1)	Y (5)	
RCP Seal #3 Tk Level Sensor #1 Loop 1	30JEB10CL057	30UJA11002	H	H	SII	NS-AQ		EMC	Y (1)	Y (5)	
RCP Seal #3 Tk Level Sensor #2 Loop 1	30JEB10CL061	30UJA11002	H	H	SII	NS-AQ		EMC	Y (1)	Y (5)	
RCP SSSS Position Sensor #1 Loop 1	30JEB10CG050A	30UJA11002	H	H	SII	NS-AQ		EMC	Y (1)	Y (5)	
RCP SSSS Position Sensor #2 Loop 1	30JEB10CG050B	30UJA11002	H	H	SII	NS-AQ		EMC	Y (1)	Y (5)	
RCP-M Diff Current Sensor #1 Loop 1	30JEB10CE089	30UJA18002	H	H	SII	NS-AQ		EMC	Y (1)	Y (5)	
RCP-M Diff Current Sensor #2 Loop 1	30JEB10CE090	30UJA18002	H	H	SII	NS-AQ		EMC	Y (1)	Y (5)	
RCP-M Diff Current Sensor #3 Loop 1	30JEB10CE091	30UJA18002	H	H	SII	NS-AQ		EMC	Y (1)	Y (5)	
~~RCP-M Current Sensor #1 Loop 1~~	~~30JEB10CE889~~	~~31UJK18027~~	~~M~~	~~M~~	~~SI~~	~~S~~	~~1E~~	~~EMC~~		~~Y (5)~~	~~Y (6)~~
~~RCP-M Current Sensor #2 Loop 1~~	~~30JEB10CE890~~	~~31UJK18027~~	~~M~~	~~M~~	~~SI~~	~~S~~	~~1E~~	~~EMC~~		~~Y (5)~~	~~Y (6)~~
~~RCP-M Current Sensor #3 Loop 1~~	~~30JEB10CE891~~	~~31UJK18027~~	~~M~~	~~M~~	~~SI~~	~~S~~	~~1E~~	~~EMC~~		~~Y (5)~~	~~Y (6)~~
RCP-M Speed Sensor Loop 1	30JEB10CS896	30UJA18002	H	H	RT SI	S	1E	EMC	Y (1)	Y (5)	
RCP-M Speed Sensor - Standby Loop 1	30JEB10CS897	30UJA18002	H	H	RT SI	S	1E	EMC	Y (1)	Y (5)	
RCP-M Winding Temp Sensor #1 Loop 1	30JEB10CT069	30UJA18002	H	H	SII	NS-AQ		EMC	Y (1)	Y (5)	
RCP-M Winding Temp Sensor #2 Loop 1	30JEB10CT070	30UJA18002	H	H	SII	NS-AQ		EMC	Y (1)	Y (5)	
RCP-M Winding Temp Sensor #3 Loop 1	30JEB10CT071	30UJA18002	H	H	SII	NS-AQ		EMC	Y (1)	Y (5)	

Table 3.11-1—List of Environmentally Qualified Electrical/I&C Equipment (Sheet 18 of 130)

Name Tag (Equipment Description)	Tag Number	Local Area KKS ID (Room Location)	EQ Environment (Note 1)	Radiation Environment Zone (Note 2)	EQ Designated Function (Note 3)	Safety Class (Note 4)		EQ Program Designation (Note 5)	
RCP-M Lwr Oil Tank Temp Sensor Loop 1	30JEB10CT585	30UJA18002	H	H	SII	NS-AQ	EMC	Y (1)	Y (5)
RCP-M Lwr Brg Oil Level Sensor #1 Loop 1	30JEB10CL051	30UJA18002	H	H	SII	NS-AQ	EMC	Y (1)	Y (5)
RCP-M Lwr Brg Oil Level Sensor #2 Loop 1	30JEB10CL501	30UJA18002	H	H	SII	NS-AQ	EMC	Y (1)	Y (5)
RCP-M Lwr Rad Brg Temp Sensor #1 Loop 1	30JEB10CT075	30UJA18002	H	H	SII	NS-AQ	EMC	Y (1)	Y (5)
RCP-M Lwr Rad Brg Temp Sensor #2 Loop 1	30JEB10CT084	30UJA18002	H	H	SII	NS-AQ	EMC	Y (1)	Y (5)
RCP-M Lwr Thr Brg Temp Sensor #1 Loop 1	30JEB10CT080	30UJA18002	H	H	SII	NS-AQ	EMC	Y (1)	Y (5)
RCP-M Lwr Thr Brg Temp Sensor #2 Loop 1	30JEB10CT081	30UJA18002	H	H	SII	NS-AQ	EMC	Y (1)	Y (5)
RCP-M Upr Oil Tk Temp Sensor Loop 1	30JEB10CT504	30UJA18002	H	H	SII	NS-AQ	EMC	Y (1)	Y (5)
RCP-M Upr Brg Oil Level Sensor #1 Loop 1	30JEB10CL055	30UJA18002	H	H	SII	NS-AQ	EMC	Y (1)	Y (5)
RCP-M Upr Brg Oil Level Sensor #2 Loop 1	30JEB10CL503	30UJA18002	H	H	SII	NS-AQ	EMC	Y (1)	Y (5)
RCP-M Upr Rad Brg Temp Sensor #1 Loop 1	30JEB10CT076	30UJA18002	H	H	SII	NS-AQ	EMC	Y (1)	Y (5)
RCP-M Upr Rad Brg Temp Sensor #2 Loop 1	30JEB10CT077	30UJA18002	H	H	SII	NS-AQ	EMC	Y (1)	Y (5)
RCP-M Upr Thr Brg Temp Sensor #1 Loop 1	30JEB10CT078	30UJA18002	H	H	SII	NS-AQ	EMC	Y (1)	Y (5)
RCP-M Upr Thr Brg Temp Sensor #2 Loop 1	30JEB10CT079	30UJA18002	H	H	SII	NS-AQ	EMC	Y (1)	Y (5)
RCP-M Oil Press Sensor #1 Loop 1	30JEB10CP099	30UJA18002	H	H	SII	NS-AQ	EMC	Y (1)	Y (5)
RCP-M Oil Press Sensor #2 Loop 1	30JEB10CP505	30UJA18002	H	H	SII	NS-AQ	EMC	Y (1)	Y (5)
RCP-M Oil Coll Tk Level Sensor Loop 1	30JEB10CL056	30UJA18002	H	H	SII	NS-AQ	EMC	Y (1)	Y (5)
RCP, Loop 2									
RCP Motor Loop 2	30JEB20AP001	30UJA18005	H	H	SII	NS-AQ	EMC	Y (1)	Y (5)
TB Inlet Water Vlv Actuator Loop 2	30JEB20AA021	30UJA15005	H	H	SII	NS-AQ	EMC	Y (1)	Y (5)
TB Outlet Water Vlv Actuator Loop 2	30JEB20AA003	30UJA15005	H	H	SII	NS-AQ	EMC	Y (1)	Y (5)
RCP Seal #1 Leakoff Vlv Act Loop 2	30JEB20AA009	30UJA18005	H	H	SII	NS-AQ	EMC	Y (1)	Y (5)
RCP Seal #2 Tk Water Vlv Act Loop 2	30JEB20AA022	30UJA18004	H	H	SII	NS-AQ	EMC	Y (1)	Y (5)
RCP Seal #2 Leakoff Vlv Act Loop 2	30JEB20AA010	30UJA15005	H	H	SII	NS-AQ	EMC	Y (1)	Y (5)
RCP Seal #3 Inject Vlv Act Loop 2	30JEB20AA013	30UJA34014	H	H	SII	NS-AQ	EMC	Y (1)	Y (5)
RCP Seal #3 Leakoff Vlv Act Loop 2	30JEB20AA017	30UJA15014	H	H	SII	NS-AQ	EMC	Y (1)	Y (5)
SSSS Actuation Vlv Act Loop 2	30JEB20AA018	30UJA15005	H	H	SII	NS-AQ	EMC	Y (1)	Y (5)
SSSS Atmos Vent Vlv Act Loop 2	30JEB20AA020	30UJA15005	H	H	SII	NS-AQ	EMC	Y (1)	Y (5)
RCP-M Oil Lift Pump Motor Loop 2	30JEB20AP011	30UJA18005	H	H	SII	NS-AQ	EMC	Y (1)	Y (5)
RCP-M Anti-Cond Heater Element Loop 2	30JEB20AH501	30UJA23005	H	H	SII	NS-AQ		Y (1)	Y (5)
RCP TB Press Sensor Loop 2	30JEB20CP002	30UJA11005	H	H	SII	NS-AQ	EMC	Y (1)	Y (5)
RCP TB Temp Sensor Loop 2	30JEB20CT007	30UJA11005	H	H	SII	NS-AQ	EMC	Y (1)	Y (5)
RCP Seal #1 Diff Press Sensor #1 Loop 2	30JEB20CP065	30UJA11005	H	H	SII	NS-AQ	EMC	Y (1)	Y (5)

Table 3.11-1—List of Environmentally Qualified Electrical/I&C Equipment (Sheet 19 of 130)

Name Tag (Equipment Description)	Tag Number	Local Area KKS ID (Room Location)	EQ Environment (Note 1)	Radiation Environment Zone (Note 2)	EQ Designated Function (Note 3)	Safety Class (Note 4)			EQ Program Designation (Note 5)		
RCP Seal #1 Diff Press Sensor #2 Loop 2	30JEB20CP567	30UJA18005	H	H	SII	NS-AQ		EMC	Y (1)	Y (5)	
RCP Seal #1 Temp Sensor #1 Loop 2	30JEB20CT002	30UJA11005	H	H	SII	NS-AQ		EMC	Y (1)	Y (5)	
RCP Seal #1 Temp Sensor #2 Loop 2	30JEB20CT003	30UJA11005	H	H	SII	NS-AQ		EMC	Y (1)	Y (5)	
RCP Seal #2 Tk Level Sensor #1 Loop 2	30JEB20CL065	30UJA11005	H	H	SII	NS-AQ		EMC	Y (1)	Y (5)	
RCP Seal #2 Tk Level Sensor #2 Loop 2	30JEB20CL066	30UJA11005	H	H	SII	NS-AQ		EMC	Y (1)	Y (5)	
RCP Seal #2 Leakoff Flowrate Sensor #1 Loop 2	30JEB20CF063	30UJA11005	H	H	SII	NS-AQ		EMC	Y (1)	Y (5)	
RCP Seal #2 Leakoff Flowrate Sensor #2 Loop 2	30JEB20CF064	30UJA11005	H	H	SII	NS-AQ		EMC	Y (1)	Y (5)	
RCP Seal #3 Tk Level Sensor #1 Loop 2	30JEB20CL057	30UJA11005	H	H	SII	NS-AQ		EMC	Y (1)	Y (5)	
RCP Seal #3 Tk Level Sensor #2 Loop 2	30JEB20CL061	30UJA11005	H	H	SII	NS-AQ		EMC	Y (1)	Y (5)	
RCP SSSS Position Sensor #1 Loop 2	30JEB20CG050A	30UJA11005	H	H	SII	NS-AQ		EMC	Y (1)	Y (5)	
RCP SSSS Position Sensor #2 Loop 2	30JEB20CG050B	30UJA11005	H	H	SII	NS-AQ		EMC	Y (1)	Y (5)	
RCP-M Diff Current Sensor #1 Loop 2	30JEB20CE089	30UJA18005	H	H	SII	NS-AQ		EMC	Y (1)	Y (5)	
RCP-M Diff Current Sensor #2 Loop 2	30JEB20CE090	30UJA18005	H	H	SII	NS-AQ		EMC	Y (1)	Y (5)	
RCP-M Diff Current Sensor #3 Loop 2	30JEB20CE091	30UJA18005	H	H	SII	NS-AQ		EMC	Y (1)	Y (5)	
~~RCP-M Current Sensor #1 Loop 2~~	~~30JEB20CE889~~	~~32UJK18020~~	~~M~~	~~M~~	~~SI~~	~~S~~	~~1E~~	~~EMC~~		~~Y (5)~~	~~Y (6)~~
~~RCP-M Current Sensor #2 Loop 2~~	~~30JEB20CE890~~	~~32UJK18020~~	~~M~~	~~M~~	~~SI~~	~~S~~	~~1E~~	~~EMC~~		~~Y (5)~~	~~Y (6)~~
~~RCP-M Current Sensor #3 Loop 2~~	~~30JEB20CE891~~	~~32UJK18020~~	~~M~~	~~M~~	~~SI~~	~~S~~	~~1E~~	~~EMC~~		~~Y (5)~~	~~Y (6)~~
RCP-M Speed Sensor Loop 2	30JEB20CS896	30UJA18005	H	H	RT SI	S	1E	EMC	Y (1)	Y (5)	
RCP-M Speed Sensor - ~~Standby~~ Loop 2	30JEB20CS897	30UJA18005	H	H	RT SI	S	1E	EMC	Y (1)	Y (5)	
RCP-M Winding Temp Sensor #1 Loop 2	30JEB20CT069	30UJA18005	H	H	SII	NS-AQ		EMC	Y (1)	Y (5)	
RCP-M Winding Temp Sensor #2 Loop 2	30JEB20CT070	30UJA18005	H	H	SII	NS-AQ		EMC	Y (1)	Y (5)	
RCP-M Winding Temp Sensor #3 Loop 2	30JEB20CT071	30UJA18005	H	H	SII	NS-AQ		EMC	Y (1)	Y (5)	
RCP-M Lwr Oil Tank Temp Sensor Loop 2	30JEB20CT585	30UJA18005	H	H	SII	NS-AQ		EMC	Y (1)	Y (5)	
RCP-M Lwr Brg Oil Level Sensor #1 Loop 2	30JEB20CL051	30UJA18005	H	H	SII	NS-AQ		EMC	Y (1)	Y (5)	
RCP-M Lwr Brg Oil Level Sensor #2 Loop 2	30JEB20CL501	30UJA18005	H	H	SII	NS-AQ		EMC	Y (1)	Y (5)	
RCP-M Lwr Rad Brg Temp Sensor #1 Loop 2	30JEB20CT075	30UJA18005	H	H	SII	NS-AQ		EMC	Y (1)	Y (5)	
RCP-M Lwr Rad Brg Temp Sensor #2 Loop 2	30JEB20CT084	30UJA18005	H	H	SII	NS-AQ		EMC	Y (1)	Y (5)	
RCP-M Lwr Thr Brg Temp Sensor #1 Loop 2	30JEB20CT080	30UJA18005	H	H	SII	NS-AQ		EMC	Y (1)	Y (5)	
RCP-M Lwr Thr Brg Temp Sensor #2 Loop 2	30JEB20CT081	30UJA18005	H	H	SII	NS-AQ		EMC	Y (1)	Y (5)	
RCP-M Upr Oil Tk Temp Sensor Loop 2	30JEB20CT504	30UJA18005	H	H	SII	NS-AQ		EMC	Y (1)	Y (5)	
RCP-M Upr Brg Oil Level Sensor #1 Loop 2	30JEB20CL055	30UJA18005	H	H	SII	NS-AQ		EMC	Y (1)	Y (5)	

Table 3.11-1—List of Environmentally Qualified Electrical/I&C Equipment (Sheet 20 of 130)

Name Tag (Equipment Description)	Tag Number	Local Area KKS ID (Room Location)	EQ Environment (Note 1)	Radiation Environment Zone (Note 2)	EQ Designated Function (Note 3)	Safety Class (Note 4)		EQ Program Designation (Note 5)	
RCP-M Upr Brg Oil Level Sensor #2 Loop 2	30JEB20CL503	30UJA18005	H	H	SII	NS-AQ	EMC	Y (1)	Y (5)
RCP-M Upr Rad Brg Temp Sensor #1 Loop 2	30JEB20CT076	30UJA18005	H	H	SII	NS-AQ	EMC	Y (1)	Y (5)
RCP-M Upr Rad Brg Temp Sensor #2 Loop 2	30JEB20CT077	30UJA18005	H	H	SII	NS-AQ	EMC	Y (1)	Y (5)
RCP-M Upr Thr Brg Temp Sensor #1 Loop 2	30JEB20CT078	30UJA18005	H	H	SII	NS-AQ	EMC	Y (1)	Y (5)
RCP-M Upr Thr Brg Temp Sensor #2 Loop 2	30JEB20CT079	30UJA18005	H	H	SII	NS-AQ	EMC	Y (1)	Y (5)
RCP-M Oil Press Sensor #1 Loop 2	30JEB20CP099	30UJA18005	H	H	SII	NS-AQ	EMC	Y (1)	Y (5)
RCP-M Oil Press Sensor #2 Loop 2	30JEB20CP505	30UJA18005	H	H	SII	NS-AQ	EMC	Y (1)	Y (5)
RCP-M Oil Coll Tk Level Sensor Loop 2	30JEB20CL056	30UJA18005	H	H	SII	NS-AQ	EMC	Y (1)	Y (5)
RCP, Loop 3									
RCP Motor Loop 3	30JEB30AP001	30UJA18006	H	H	SII	NS-AQ	EMC	Y (1)	Y (5)
TB Inlet Water Vlv Actuator Loop 3	30JEB30AA021	30UJA15006	H	H	SII	NS-AQ	EMC	Y (1)	Y (5)
TB Outlet Water Vlv Actuator Loop 3	30JEB30AA003	30UJA15006	H	H	SII	NS-AQ	EMC	Y (1)	Y (5)
RCP Seal #1 Leakoff Vlv Act Loop 3	30JEB30AA009	30UJA18006	H	H	SII	NS-AQ	EMC	Y (1)	Y (5)
RCP Seal #2 Tk Water Vlv Act Loop 3	30JEB30AA022	30UJA18007	H	H	SII	NS-AQ	EMC	Y (1)	Y (5)
RCP Seal #2 Leakoff Vlv Act Loop 3	30JEB30AA010	30UJA18006	H	H	SII	NS-AQ	EMC	Y (1)	Y (5)
RCP Seal #3 Inject Vlv Act Loop 3	30JEB30AA013	30UJA34015	H	H	SII	NS-AQ	EMC	Y (1)	Y (5)
RCP Seal #3 Leakoff Vlv Act Loop 3	30JEB30AA017	30UJA15015	H	H	SII	NS-AQ	EMC	Y (1)	Y (5)
SSSS Actuation Vlv Act Loop 3	30JEB30AA018	30UJA15006	H	H	SII	NS-AQ	EMC	Y (1)	Y (5)
SSSS Atmos Vent Vlv Act Loop 3	30JEB30AA020	30UJA15006	H	H	SII	NS-AQ	EMC	Y (1)	Y (5)
RCP-M Oil Lift Pump Motor Loop 3	30JEB30AP011	30UJA18006	H	H	SII	NS-AQ	EMC	Y (1)	Y (5)
RCP-M Anti-Cond Heater Element Loop 3	30JEB30AH501	30UJA23006	H	H	SII	NS-AQ		Y (1)	Y (5)
RCP TB Press Sensor Loop 3	30JEB30CP002	30UJA11006	H	H	SII	NS-AQ	EMC	Y (1)	Y (5)
RCP TB Temp Sensor Loop 3	30JEB30CT007	30UJA11006	H	H	SII	NS-AQ	EMC	Y (1)	Y (5)
RCP Seal #1 Diff Press Sensor #1 Loop 3	30JEB30CP065	30UJA11006	H	H	SII	NS-AQ	EMC	Y (1)	Y (5)
RCP Seal #1 Diff Press Sensor #2 Loop 3	30JEB30CP567	30UJA18006	H	H	SII	NS-AQ	EMC	Y (1)	Y (5)
RCP Seal #1 Temp Sensor #1 Loop 3	30JEB30CT002	30UJA11006	H	H	SII	NS-AQ	EMC	Y (1)	Y (5)
RCP Seal #1 Temp Sensor #2 Loop 3	30JEB30CT003	30UJA11006	H	H	SII	NS-AQ	EMC	Y (1)	Y (5)
RCP Seal #2 Tk Level Sensor #1 Loop 3	30JEB30CL065	30UJA11006	H	H	SII	NS-AQ	EMC	Y (1)	Y (5)
RCP Seal #2 Tk Level Sensor #2 Loop 3	30JEB30CL066	30UJA11006	H	H	SII	NS-AQ	EMC	Y (1)	Y (5)
RCP Seal #2 Leakoff Flowrate Sensor #1 Loop 3	30JEB30CF063	30UJA11006	H	H	SII	NS-AQ	EMC	Y (1)	Y (5)
RCP Seal #2 Leakoff Flowrate Sensor #2 Loop 3	30JEB30CF064	30UJA11006	H	H	SII	NS-AQ	EMC	Y (1)	Y (5)

Table 3.11-1—List of Environmentally Qualified Electrical/I&C Equipment (Sheet 21 of 130)

Name Tag (Equipment Description)	Tag Number	Local Area KKS ID (Room Location)	EQ Environment (Note 1)	Radiation Environment Zone (Note 2)	EQ Designated Function (Note 3)	Safety Class (Note 4)	EQ Program Designation (Note 5)
RCP Seal #3 Tk Level Sensor #1 Loop 3	30JEB30CL057	30UJA11006	H	H	SII	NS-AQ EMC	Y (1) Y (5)
RCP Seal #3 Tk Level Sensor #2 Loop 3	30JEB30CL061	30UJA11006	H	H	SII	NS-AQ EMC	Y (1) Y (5)
RCP SSSS Position Sensor #1 Loop 3	30JEB30CG050A	30UJA11006	H	H	SII	NS-AQ EMC	Y (1) Y (5)
RCP SSSS Position Sensor #2 Loop 3	30JEB30CG050B	30UJA11006	H	H	SII	NS-AQ EMC	Y (1) Y (5)
RCP-M Diff Current Sensor #1 Loop 3	30JEB30CE089	30UJA18006	H	H	SII	NS-AQ EMC	Y (1) Y (5)
RCP-M Diff Current Sensor #2 Loop 3	30JEB30CE090	30UJA18006	H	H	SII	NS-AQ EMC	Y (1) Y (5)
RCP-M Diff Current Sensor #3 Loop 3	30JEB30CE091	30UJA18006	H	H	SII	NS-AQ EMC	Y (1) Y (5)
~~RCP-M Current Sensor #1 Loop 3~~	~~30JEB30CE889~~	~~33UJK18020~~	~~M~~	~~M~~	~~SI~~	~~S 1E EMC~~	~~Y (5) Y (6)~~
~~RCP-M Current Sensor #2 Loop 3~~	~~30JEB30CE890~~	~~33UJK18020~~	~~M~~	~~M~~	~~SI~~	~~S 1E EMC~~	~~Y (5) Y (6)~~
~~RCP-M Current Sensor #3 Loop 3~~	~~30JEB30CE891~~	~~33UJK18020~~	~~M~~	~~M~~	~~SI~~	~~S 1E EMC~~	~~Y (5) Y (6)~~
RCP-M Speed Sensor Loop 3	30JEB30CS896	30UJA18006	H	H	RT SI	S 1E EMC	Y (1) Y (5)
RCP-M Speed Sensor - Standby Loop 3	30JEB30CS897	30UJA18006	H	H	RT SI	S 1E EMC	Y (1) Y (5)
RCP-M Winding Temp Sensor #1 Loop 3	30JEB30CT069	30UJA18006	H	H	SII	NS-AQ EMC	Y (1) Y (5)
RCP-M Winding Temp Sensor #2 Loop 3	30JEB30CT070	30UJA18006	H	H	SII	NS-AQ EMC	Y (1) Y (5)
RCP-M Winding Temp Sensor #3 Loop 3	30JEB30CT071	30UJA18006	H	H	SII	NS-AQ EMC	Y (1) Y (5)
RCP-M Lwr Oil Tank Temp Sensor Loop 3	30JEB30CT585	30UJA18006	H	H	SII	NS-AQ EMC	Y (1) Y (5)
RCP-M Lwr Brg Oil Level Sensor #1 Loop 3	30JEB30CL051	30UJA18006	H	H	SII	NS-AQ EMC	Y (1) Y (5)
RCP-M Lwr Brg Oil Level Sensor #2 Loop 3	30JEB30CL501	30UJA18006	H	H	SII	NS-AQ EMC	Y (1) Y (5)
RCP-M Lwr Rad Brg Temp Sensor #1 Loop 3	30JEB30CT075	30UJA18006	H	H	SII	NS-AQ EMC	Y (1) Y (5)
RCP-M Lwr Rad Brg Temp Sensor #2 Loop 3	30JEB30CT084	30UJA18006	H	H	SII	NS-AQ EMC	Y (1) Y (5)
RCP-M Lwr Thr Brg Temp Sensor #1 Loop 3	30JEB30CT080	30UJA18006	H	H	SII	NS-AQ EMC	Y (1) Y (5)
RCP-M Lwr Thr Brg Temp Sensor #2 Loop 3	30JEB30CT081	30UJA18006	H	H	SII	NS-AQ EMC	Y (1) Y (5)
RCP-M Upr Oil Tk Temp Sensor Loop 3	30JEB30CT504	30UJA18006	H	H	SII	NS-AQ EMC	Y (1) Y (5)
RCP-M Upr Brg Oil Level Sensor #1 Loop 3	30JEB30CL055	30UJA18006	H	H	SII	NS-AQ EMC	Y (1) Y (5)
RCP-M Upr Brg Oil Level Sensor #2 Loop 3	30JEB30CL503	30UJA18006	H	H	SII	NS-AQ EMC	Y (1) Y (5)
RCP-M Upr Rad Brg Temp Sensor #1 Loop 3	30JEB30CT076	30UJA18006	H	H	SII	NS-AQ EMC	Y (1) Y (5)
RCP-M Upr Rad Brg Temp Sensor #2 Loop 3	30JEB30CT077	30UJA18006	H	H	SII	NS-AQ EMC	Y (1) Y (5)
RCP-M Upr Thr Brg Temp Sensor #1 Loop 3	30JEB30CT078	30UJA18006	H	H	SII	NS-AQ EMC	Y (1) Y (5)
RCP-M Upr Thr Brg Temp Sensor #2 Loop 3	30JEB30CT079	30UJA18006	H	H	SII	NS-AQ EMC	Y (1) Y (5)
RCP-M Oil Press Sensor #1 Loop 3	30JEB30CP099	30UJA18006	H	H	SII	NS-AQ EMC	Y (1) Y (5)
RCP-M Oil Press Sensor #2 Loop 3	30JEB30CP505	30UJA18006	H	H	SII	NS-AQ EMC	Y (1) Y (5)
RCP-M Oil Coll Tk Level Sensor Loop 3	30JEB30CL056	30UJA18006	H	H	SII	NS-AQ EMC	Y (1) Y (5)

Table 3.11-1—List of Environmentally Qualified Electrical/I&C Equipment (Sheet 22 of 130)

Name Tag (Equipment Description)	Tag Number	Local Area KKS ID (Room Location)	EQ Environment (Note 1)	Radiation Environment Zone (Note 2)	EQ Designated Function (Note 3)	Safety Class (Note 4)		EQ Program Designation (Note 5)		
RCP, Loop 4										
RCP Motor Loop 4	30JEB40AP001	30UJA18009	H	H	SII	NS-AQ	EMC	Y (1)	Y (5)	
TB Inlet Water Vlv Actuator Loop 4	30JEB40AA021	30UJA15009	H	H	SII	NS-AQ	EMC	Y (1)	Y (5)	
TB Outlet Water Vlv Actuator Loop 4	30JEB40AA003	30UJA15009	H	H	SII	NS-AQ	EMC	Y (1)	Y (5)	
RCP Seal #1 Leakoff Vlv Act Loop 4	30JEB40AA009	30UJA18009	H	H	SII	NS-AQ	EMC	Y (1)	Y (5)	
RCP Seal #2 Tk Water Vlv Act Loop 4	30JEB40AA022	30UJA18008	H	H	SII	NS-AQ	EMC	Y (1)	Y (5)	
RCP Seal #2 Leakoff Vlv Act Loop 4	30JEB40AA010	30UJA18009	H	H	SII	NS-AQ	EMC	Y (1)	Y (5)	
RCP Seal #3 Inject Vlv Act Loop 4	30JEB40AA013	30UJA29016	H	H	SII	NS-AQ	EMC	Y (1)	Y (5)	
RCP Seal #3 Leakoff Vlv Act Loop 4	30JEB40AA017	30UJA15016	H	H	SII	NS-AQ	EMC	Y (1)	Y (5)	
SSSS Actuation Vlv Act Loop 4	30JEB40AA018	30UJA15009	H	H	SII	NS-AQ	EMC	Y (1)	Y (5)	
SSSS Atmos Vent Vlv Act Loop 4	30JEB40AA020	30UJA15009	H	H	SII	NS-AQ	EMC	Y (1)	Y (5)	
RCP-M Oil Lift Pump Motor Loop 4	30JEB40AP011	30UJA18009	H	H	SII	NS-AQ	EMC	Y (1)	Y (5)	
RCP-M Anti-Cond Heater Element Loop 4	30JEB40AH501	30UJA23009	H	H	SII	NS-AQ		Y (1)	Y (5)	
RCP-M Diff Current Sensor #1 Loop 4	30JEB40CE089	30UJA18009	H	H	SII	NS-AQ	EMC	Y (1)	Y (5)	
RCP-M Diff Current Sensor #2 Loop 4	30JEB40CE090	30UJA18009	H	H	SII	NS-AQ	EMC	Y (1)	Y (5)	
RCP-M Diff Current Sensor #3 Loop 4	30JEB40CE091	30UJA18009	H	H	SII	NS-AQ	EMC	Y (1)	Y (5)	
~~RCP-M Current Sensor #1 Loop 4~~	~~30JEB40CE889~~	~~34UJK18027~~	~~M~~	~~M~~	~~SI~~	~~S~~ ~~1E~~	~~EMC~~		~~Y (5)~~	~~Y (6)~~
~~RCP-M Current Sensor #2 Loop 4~~	~~30JEB40CE890~~	~~34UJK18027~~	~~M~~	~~M~~	~~SI~~	~~S~~ ~~1E~~	~~EMC~~		~~Y (5)~~	~~Y (6)~~
~~RCP-M Current Sensor #3 Loop 4~~	~~30JEB40CE891~~	~~34UJK18027~~	~~M~~	~~M~~	~~SI~~	~~S~~ ~~1E~~	~~EMC~~		~~Y (5)~~	~~Y (6)~~
RCP Seal #2 Leakoff Flowrate Sensor #1 Loop 4	30JEB40CF063	30UJA11009	H	H	SII	NS-AQ	EMC	Y (1)	Y (5)	
RCP Seal #2 Leakoff Flowrate Sensor #2 Loop 4	30JEB40CF064	30UJA11009	H	H	SII	NS-AQ	EMC	Y (1)	Y (5)	
RCP SSSS Position Sensor #1 Loop 4	30JEB40CG050A	30UJA11009	H	H	SII	NS-AQ	EMC	Y (1)	Y (5)	
RCP SSSS Position Sensor #2 Loop 4	30JEB40CG050B	30UJA11009	H	H	SII	NS-AQ	EMC	Y (1)	Y (5)	
RCP-M Lwr Brg Oil Level Sensor #1 Loop 4	30JEB40CL051	30UJA18009	H	H	SII	NS-AQ	EMC	Y (1)	Y (5)	
RCP-M Upr Brg Oil Level Sensor #1 Loop 4	30JEB40CL055	30UJA18009	H	H	SII	NS-AQ	EMC	Y (1)	Y (5)	
RCP-M Oil Coll Tk Level Sensor Loop 4	30JEB40CL056	30UJA18009	H	H	SII	NS-AQ	EMC	Y (1)	Y (5)	
RCP Seal #3 Tk Level Sensor #1 Loop 4	30JEB40CL057	30UJA11009	H	H	SII	NS-AQ	EMC	Y (1)	Y (5)	
RCP Seal #3 Tk Level Sensor #2 Loop 4	30JEB40CL061	30UJA11009	H	H	SII	NS-AQ	EMC	Y (1)	Y (5)	
RCP Seal #2 Tk Level Sensor #1 Loop 4	30JEB40CL065	30UJA11009	H	H	SII	NS-AQ	EMC	Y (1)	Y (5)	
RCP Seal #2 Tk Level Sensor #2 Loop 4	30JEB40CL066	30UJA11009	H	H	SII	NS-AQ	EMC	Y (1)	Y (5)	
RCP-M Lwr Brg Oil Level Sensor #2 Loop 4	30JEB40CL501	30UJA18009	H	H	SII	NS-AQ	EMC	Y (1)	Y (5)	

Table 3.11-1—List of Environmentally Qualified Electrical/I&C Equipment (Sheet 23 of 130)

Name Tag (Equipment Description)	Tag Number	Local Area KKS ID (Room Location)	EQ Environment (Note 1)	Radiation Environment Zone (Note 2)	EQ Designated Function (Note 3)			Safety Class (Note 4)			EQ Program Designation (Note 5)	
RCP-M Upr Brg Oil Level Sensor #2 Loop 4	30JEB40CL503	30UJA18009	H	H			SII	NS-AQ		EMC	Y (1)	Y (5)
RCP TB Press Sensor Loop 4	30JEB40CP002	30UJA11009	H	H			SII	NS-AQ		EMC	Y (1)	Y (5)
RCP Seal #1 Diff Press Sensor #1 Loop 4	30JEB40CP065	30UJA11009	H	H			SII	NS-AQ		EMC	Y (1)	Y (5)
RCP-M Oil Press Sensor #1 Loop 4	30JEB40CP099	30UJA18009	H	H			SII	NS-AQ		EMC	Y (1)	Y (5)
RCP-M Oil Press Sensor #2 Loop 4	30JEB40CP505	30UJA18009	H	H			SII	NS-AQ		EMC	Y (1)	Y (5)
RCP Seal #1 Diff Press Sensor #2 Loop 4	30JEB40CP567	30UJA18009	H	H			SII	NS-AQ		EMC	Y (1)	Y (5)
RCP-M Speed Sensor Loop 4	30JEB40CS896	30UJA18009	H	H	RT		SI	S	1E	EMC	Y (1)	Y (5)
RCP-M Speed Sensor - ~~Standby~~ Loop 4	30JEB40CS897	30UJA18009	H	H	RT		SI	S	1E	EMC	Y (1)	Y (5)
RCP Seal #1 Temp Sensor #1 Loop 4	30JEB40CT002	30UJA11009	H	H			SII	NS-AQ		EMC	Y (1)	Y (5)
RCP Seal #1 Temp Sensor #2 Loop 4	30JEB40CT003	30UJA11009	H	H			SII	NS-AQ		EMC	Y (1)	Y (5)
RCP TB Temp Sensor Loop 4	30JEB40CT007	30UJA11009	H	H			SII	NS-AQ		EMC	Y (1)	Y (5)
RCP-M Winding Temp Sensor #1 Loop 4	30JEB40CT069	30UJA18009	H	H			SII	NS-AQ		EMC	Y (1)	Y (5)
RCP-M Winding Temp Sensor #2 Loop 4	30JEB40CT070	30UJA18009	H	H			SII	NS-AQ		EMC	Y (1)	Y (5)
RCP-M Winding Temp Sensor #3 Loop 4	30JEB40CT071	30UJA18009	H	H			SII	NS-AQ		EMC	Y (1)	Y (5)
RCP-M Lwr Rad Brg Temp Sensor #1 Loop 4	30JEB40CT075	30UJA18009	H	H			SII	NS-AQ		EMC	Y (1)	Y (5)
RCP-M Upr Rad Brg Temp Sensor #1 Loop 4	30JEB40CT076	30UJA18009	H	H			SII	NS-AQ		EMC	Y (1)	Y (5)
RCP-M Upr Rad Brg Temp Sensor #2 Loop 4	30JEB40CT077	30UJA18009	H	H			SII	NS-AQ		EMC	Y (1)	Y (5)
RCP-M Upr Thr Brg Temp Sensor #1 Loop 4	30JEB40CT078	30UJA18009	H	H			SII	NS-AQ		EMC	Y (1)	Y (5)
RCP-M Upr Thr Brg Temp Sensor #2 Loop 4	30JEB40CT079	30UJA18009	H	H			SII	NS-AQ		EMC	Y (1)	Y (5)
RCP-M Lwr Thr Brg Temp Sensor #1 Loop 4	30JEB40CT080	30UJA18009	H	H			SII	NS-AQ		EMC	Y (1)	Y (5)
RCP-M Lwr Thr Brg Temp Sensor #2 Loop 4	30JEB40CT081	30UJA18009	H	H			SII	NS-AQ		EMC	Y (1)	Y (5)
RCP-M Lwr Rad Brg Temp Sensor #2 Loop 4	30JEB40CT084	30UJA18009	H	H			SII	NS-AQ		EMC	Y (1)	Y (5)
RCP-M Upr Oil Tk Temp Sensor Loop 4	30JEB40CT504	30UJA18009	H	H			SII	NS-AQ		EMC	Y (1)	Y (5)
RCP-M Lwr Oil Tank Temp Sensor Loop 4	30JEB40CT585	30UJA18009	H	H			SII	NS-AQ		EMC	Y (1)	Y (5)
Reactor Coolant Loop 1												
RCS Flowrate Sensor #1 Loop 1	30JEC10CF815	30UJA15003	H	H	RT		SI	S	1E	EMC	Y (1)	Y (5)
RCS Flowrate Sensor #2 Loop 1	30JEC10CF817	30UJA15003	H	H	RT		SI	S	1E	EMC	Y (1)	Y (5)
RCS Flowrate Sensor #3 Loop 1	30JEC10CF819	30UJA15003	H	H	RT		SI	S	1E	EMC	Y (1)	Y (5)
RCS Flowrate Sensor #4 Loop 1	30JEC10CF821	30UJA15003	H	H	RT		SI	S	1E	EMC	Y (1)	Y (5)
RCS Loop Level Sensor Loop 1	30JEC10CL823	30UJA15003	H	H			SI	S	1E	EMC	Y (1)	Y (5)
RCP Delta P Sensor #1 Loop 1	30JEC10CP801	30UJA15003	H	H		ES	SI	S	1E	EMC	Y (1)	Y (5)
RCP Delta P Sensor #2 Loop 1	30JEC10CP802	30UJA15003	H	H		ES	SI	S	1E	EMC	Y (1)	Y (5)
H/L NR Temp Sensor #1 Loop 1	30JEC10CT801	30UJA15003	H	H	RT		SI	S	1E	EMC	Y (1)	Y (5)

Table 3.11-1—List of Environmentally Qualified Electrical/I&C Equipment (Sheet 24 of 130)

Name Tag (Equipment Description)	Tag Number	Local Area KKS ID (Room Location)	EQ Environment (Note 1)	Radiation Environment Zone (Note 2)	EQ Designated Function (Note 3)				Safety Class (Note 4)			EQ Program Designation (Note 5)	
H/L NR Temp Sensor #2 Loop 1	30JEC10CT802	30UJA15003	H	H	RT			SI	S	1E	EMC	Y (1)	Y (5)
H/L NR Temp Sensor #3 Loop 1	30JEC10CT803	30UJA15003	H	H	RT			SI	S	1E	EMC	Y (1)	Y (5)
H/L NR Temp Sensor #4 Loop 1	30JEC10CT804	30UJA15003	H	H	RT			SI	S	1E	EMC	Y (1)	Y (5)
H/L WR Temp Sensor Loop 1	30JEC10CT805	30UJA15003	H	H		ES	PAM	SI	S	1E	EMC	Y (1)	Y (5)
C/L NR Temp Sensor #1 Loop 1	30JEC10CT807	30UJA15002	H	H	RT			SI	S	1E	EMC	Y (1)	Y (5)
C/L NR Temp Sensor #2 Loop 1	30JEC10CT808	30UJA15002	H	H	RT			SI	S	1E	EMC	Y (1)	Y (5)
C/L WR Temp Sensor Loop 1	30JEC10CT811	30UJA15002	H	H			PAM	SI	S	1E	EMC	Y (1)	Y (5)
Reactor Coolant Loop 2													
RCS Flowrate Sensor #1 Loop 2	30JEC20CF815	30UJA15004	H	H	RT			SI	S	1E	EMC	Y (1)	Y (5)
RCS Flowrate Sensor #2 Loop 2	30JEC20CF817	30UJA15004	H	H	RT			SI	S	1E	EMC	Y (1)	Y (5)
RCS Flowrate Sensor #3 Loop 2	30JEC20CF819	30UJA15004	H	H	RT			SI	S	1E	EMC	Y (1)	Y (5)
RCS Flowrate Sensor #4 Loop 2	30JEC20CF821	30UJA15004	H	H	RT			SI	S	1E	EMC	Y (1)	Y (5)
RCS Loop Level Sensor Loop 2	30JEC20CL823	30UJA15004	H	H				SI	S	1E	EMC	Y (1)	Y (5)
RCP Delta P Sensor #1 Loop 2	30JEC20CP801	30UJA15004	H	H		ES		SI	S	1E	EMC	Y (1)	Y (5)
RCP Delta P Sensor #2 Loop 2	30JEC20CP802	30UJA15004	H	H		ES		SI	S	1E	EMC	Y (1)	Y (5)
H/L NR Temp Sensor #1 Loop 2	30JEC20CT801	30UJA15004	H	H	RT			SI	S	1E	EMC	Y (1)	Y (5)
H/L NR Temp Sensor #2 Loop 2	30JEC20CT802	30UJA15004	H	H	RT			SI	S	1E	EMC	Y (1)	Y (5)
H/L NR Temp Sensor #3 Loop 2	30JEC20CT803	30UJA15004	H	H	RT			SI	S	1E	EMC	Y (1)	Y (5)
H/L NR Temp Sensor #4 Loop 2	30JEC20CT804	30UJA15004	H	H	RT			SI	S	1E	EMC	Y (1)	Y (5)
H/L WR Temp Sensor Loop 2	30JEC20CT805	30UJA15004	H	H		ES	PAM	SI	S	1E	EMC	Y (1)	Y (5)
C/L NR Temp Sensor #1 Loop 2	30JEC20CT807	30UJA15005	H	H	RT			SI	S	1E	EMC	Y (1)	Y (5)
C/L NR Temp Sensor #2 Loop 2	30JEC20CT808	30UJA15005	H	H	RT			SI	S	1E	EMC	Y (1)	Y (5)
C/L WR Temp Sensor Loop 2	30JEC20CT811	30UJA15005	H	H			PAM	SI	S	1E	EMC	Y (1)	Y (5)
Reactor Coolant Loop 3													
RCS Flowrate Sensor #1 Loop 3	30JEC30CF815	30UJA15007	H	H	RT			SI	S	1E	EMC	Y (1)	Y (5)
RCS Flowrate Sensor #2 Loop 3	30JEC30CF817	30UJA15007	H	H	RT			SI	S	1E	EMC	Y (1)	Y (5)
RCS Flowrate Sensor #3 Loop 3	30JEC30CF819	30UJA15007	H	H	RT			SI	S	1E	EMC	Y (1)	Y (5)
RCS Flowrate Sensor #4 Loop 3	30JEC30CF821	30UJA15007	H	H	RT			SI	S	1E	EMC	Y (1)	Y (5)
RCS Loop Level Sensor Loop 3	30JEC30CL823	30UJA15007	H	H				SI	S	1E	EMC	Y (1)	Y (5)
RCP Delta P Sensor #1 Loop 3	30JEC30CP801	30UJA15007	H	H		ES		SI	S	1E	EMC	Y (1)	Y (5)
RCP Delta P Sensor #2 Loop 3	30JEC30CP802	30UJA15007	H	H		ES		SI	S	1E	EMC	Y (1)	Y (5)
PZR Surge Line Temp Sensor	30JEC30CT056	30UJA15007	H	H				SII	NS-AQ		EMC	Y (1)	Y (5)

Table 3.11-1—List of Environmentally Qualified Electrical/I&C Equipment (Sheet 25 of 130)

Name Tag (Equipment Description)	Tag Number	Local Area KKS ID (Room Location)	EQ Environment (Note 1)	Radiation Environment Zone (Note 2)	EQ Designated Function (Note 3)				Safety Class (Note 4)			EQ Program Designation (Note 5)	
H/L NR Temp Sensor #1 Loop 3	30JEC30CT801	30UJA15007	H	H	RT			SI	S	1E	EMC	Y (1)	Y (5)
H/L NR Temp Sensor #2 Loop 3	30JEC30CT802	30UJA15007	H	H	RT			SI	S	1E	EMC	Y (1)	Y (5)
H/L NR Temp Sensor #3 Loop 3	30JEC30CT803	30UJA15007	H	H	RT			SI	S	1E	EMC	Y (1)	Y (5)
H/L NR Temp Sensor #4 Loop 3	30JEC30CT804	30UJA15007	H	H	RT			SI	S	1E	EMC	Y (1)	Y (5)
H/L WR Temp Sensor Loop 3	30JEC30CT805	30UJA15007	H	H		ES	PAM	SI	S	1E	EMC	Y (1)	Y (5)
C/L NR Temp Sensor #1 Loop 3	30JEC30CT807	30UJA15006	H	H	RT			SI	S	1E	EMC	Y (1)	Y (5)
C/L NR Temp Sensor #2 Loop 3	30JEC30CT808	30UJA15006	H	H	RT			SI	S	1E	EMC	Y (1)	Y (5)
C/L WR Temp Sensor Loop 3	30JEC30CT811	30UJA11006	H	H			PAM	SI	S	1E	EMC	Y (1)	Y (5)
Reactor Coolant Loop 4													
RCS Flowrate Sensor #1 Loop 4	30JEC40CF815	30UJA15008	H	H	RT			SI	S	1E	EMC	Y (1)	Y (5)
RCS Flowrate Sensor #2 Loop 4	30JEC40CF817	30UJA15008	H	H	RT			SI	S	1E	EMC	Y (1)	Y (5)
RCS Flowrate Sensor #3 Loop 4	30JEC40CF819	30UJA15008	H	H	RT			SI	S	1E	EMC	Y (1)	Y (5)
RCS Flowrate Sensor #4 Loop 4	30JEC40CF821	30UJA15008	H	H	RT			SI	S	1E	EMC	Y (1)	Y (5)
RCS Loop Level Sensor Loop 4	30JEC40CL823	30UJA15008	H	H				SI	S	1E	EMC	Y (1)	Y (5)
RCP Delta P Sensor #1 Loop 4	30JEC40CP801	30UJA15008	H	H		ES		SI	S	1E	EMC	Y (1)	Y (5)
RCP Delta P Sensor #2 Loop 4	30JEC40CP802	30UJA15008	H	H		ES		SI	S	1E	EMC	Y (1)	Y (5)
H/L NR Temp Sensor #1 Loop 4	30JEC40CT801	30UJA15008	H	H	RT			SI	S	1E	EMC	Y (1)	Y (5)
H/L NR Temp Sensor #2 Loop 4	30JEC40CT802	30UJA15008	H	H	RT			SI	S	1E	EMC	Y (1)	Y (5)
H/L NR Temp Sensor #3 Loop 4	30JEC40CT803	30UJA15008	H	H	RT			SI	S	1E	EMC	Y (1)	Y (5)
H/L NR Temp Sensor #4 Loop 4	30JEC40CT804	30UJA15008	H	H	RT			SI	S	1E	EMC	Y (1)	Y (5)
H/L WR Temp Sensor Loop 4	30JEC40CT805	30UJA15008	H	H		ES	PAM	SI	S	1E	EMC	Y (1)	Y (5)
C/L NR Temp Sensor #1 Loop 4	30JEC40CT807	30UJA15009	H	H	RT			SI	S	1E	EMC	Y (1)	Y (5)
C/L NR Temp Sensor #2 Loop 4	30JEC40CT808	30UJA15009	H	H	RT			SI	S	1E	EMC	Y (1)	Y (5)
C/L WR Temp Sensor Loop 4	30JEC40CT811	30UJA15009	H	H			PAM	SI	S	1E	EMC	Y (1)	Y (5)
Pressurizer													
PDS Vlv #1 Actuator	30JEF10AA004	30UJA34019	H	H				SII	NS-AQ		EMC	Y (1)	Y (5)
PDS Vlv #2 Actuator	30JEF10AA005	30UJA34019	H	H				SII	NS-AQ		EMC	Y (1)	Y (5)
PDS Vlv #3 Actuator	30JEF10AA006	30UJA34019	H	H				SII	NS-AQ		EMC	Y (1)	Y (5)
PDS Vlv #4 Actuator	30JEF10AA007	30UJA34019	H	H				SII	NS-AQ		EMC	Y (1)	Y (5)
PZR Normal Spray Vlv Actuator Loop 2	30JEF10AA102	30UJA18018	H	H				SII	NS-AQ		EMC	Y (1)	Y (5)
PZR Normal Spray Vlv Actuator Loop 3	30JEF10AA103	30UJA18018	H	H				SII	NS-AQ		EMC	Y (1)	Y (5)
PSRV #1 SOV #1 Actuator	30JEF10AA717	30UJA34019	H	H				SI	S	1E	EMC	Y (1)	Y (5)

Table 3.11-1—List of Environmentally Qualified Electrical/I&C Equipment (Sheet 26 of 130)

Name Tag (Equipment Description)	Tag Number	Local Area KKS ID (Room Location)	EQ Environment (Note 1)	Radiation Environment Zone (Note 2)	EQ Designated Function (Note 3)	Safety Class (Note 4)			EQ Program Designation (Note 5)	
PSRV #1 SOV #2 Actuator	30JEF10AA718	30UJA34019	H	H	SI	S	1E	EMC	Y (1)	Y (5)
PSRV #2 SOV #1 Actuator	30JEF10AA727	30UJA34019	H	H	SI	S	1E	EMC	Y (1)	Y (5)
PSRV #2 SOV #2 Actuator	30JEF10AA728	30UJA34019	H	H	SI	S	1E	EMC	Y (1)	Y (5)
PSRV #3 SOV #1 Actuator	30JEF10AA737	30UJA34019	H	H	SI	S	1E	EMC	Y (1)	Y (5)
PSRV #3 SOV #2 Actuator	30JEF10AA738	30UJA34019	H	H	SI	S	1E	EMC	Y (1)	Y (5)
PZR On-Off Heater Element #1 Train 1	30JEF10AH111A	30UJA18019	H	H	SII	NS-AQ			Y (1)	Y (5)
PZR On-Off Heater Element #2 Train 1	30JEF10AH111B	30UJA18019	H	H	SII	NS-AQ			Y (1)	Y (5)
PZR On-Off Heater Element #3 Train 1	30JEF10AH111C	30UJA18019	H	H	SII	NS-AQ			Y (1)	Y (5)
PZR On-Off Heater Element #4 Train 1	30JEF10AH112A	30UJA18019	H	H	SII	NS-AQ			Y (1)	Y (5)
PZR On-Off Heater Element #5 Train 1	30JEF10AH112B	30UJA18019	H	H	SII	NS-AQ			Y (1)	Y (5)
PZR On-Off Heater Element #6 Train 1	30JEF10AH112C	30UJA18019	H	H	SII	NS-AQ			Y (1)	Y (5)
PZR On-Off Heater Element #7 Train 1	30JEF10AH113A	30UJA18019	H	H	SII	NS-AQ			Y (1)	Y (5)
PZR On-Off Heater Element #8 Train 1	30JEF10AH113B	30UJA18019	H	H	SII	NS-AQ			Y (1)	Y (5)
PZR On-Off Heater Element #9 Train 1	30JEF10AH113C	30UJA18019	H	H	SII	NS-AQ			Y (1)	Y (5)
PZR On-Off Heater Element #10 Train 1	30JEF10AH114A	30UJA18019	H	H	SII	NS-AQ			Y (1)	Y (5)
PZR On-Off Heater Element #11 Train 1	30JEF10AH114B	30UJA18019	H	H	SII	NS-AQ			Y (1)	Y (5)
PZR On-Off Heater Element #12 Train 1	30JEF10AH114C	30UJA18019	H	H	SII	NS-AQ			Y (1)	Y (5)
PZR Prop Heater Element #1 Train 1	30JEF10AH121A	30UJA18019	H	H	SII	NS-AQ			Y (1)	Y (5)
PZR Prop Heater Element #2 Train 1	30JEF10AH121B	30UJA18019	H	H	SII	NS-AQ			Y (1)	Y (5)
PZR Prop Heater Element #3 Train 1	30JEF10AH121C	30UJA18019	H	H	SII	NS-AQ			Y (1)	Y (5)
PZR Prop Heater Element #4 Train 1	30JEF10AH122A	30UJA18019	H	H	SII	NS-AQ			Y (1)	Y (5)
PZR Prop Heater Element #5 Train 1	30JEF10AH122B	30UJA18019	H	H	SII	NS-AQ			Y (1)	Y (5)
PZR Prop Heater Element #6 Train 1	30JEF10AH122C	30UJA18019	H	H	SII	NS-AQ			Y (1)	Y (5)
PZR Prop Heater Element #7 Train 1	30JEF10AH123A	30UJA18019	H	H	SII	NS-AQ			Y (1)	Y (5)
PZR Prop Heater Element #8 Train 1	30JEF10AH123B	30UJA18019	H	H	SII	NS-AQ			Y (1)	Y (5)
PZR Prop Heater Element #9 Train 1	30JEF10AH123C	30UJA18019	H	H	SII	NS-AQ			Y (1)	Y (5)
PZR On-Off EPS Heater Element #1 Train 1	30JEF10AH131A	30UJA18019	H	H	SII	NS-AQ			Y (1)	Y (5)
PZR On-Off EPS Heater Element #2 Train 1	30JEF10AH131B	30UJA18019	H	H	SII	NS-AQ			Y (1)	Y (5)
PZR On-Off EPS Heater Element #3 Train 1	30JEF10AH131C	30UJA18019	H	H	SII	NS-AQ			Y (1)	Y (5)
PZR On-Off EPS Heater Element #4 Train 1	30JEF10AH132A	30UJA18019	H	H	SII	NS-AQ			Y (1)	Y (5)
PZR On-Off EPS Heater Element #5 Train 1	30JEF10AH132B	30UJA18019	H	H	SII	NS-AQ			Y (1)	Y (5)
PZR On-Off EPS Heater Element #6 Train 1	30JEF10AH132C	30UJA18019	H	H	SII	NS-AQ			Y (1)	Y (5)
PZR On-Off Heater Element #1 Train 2	30JEF10AH211A	30UJA18019	H	H	SII	NS-AQ			Y (1)	Y (5)

Table 3.11-1—List of Environmentally Qualified Electrical/I&C Equipment (Sheet 27 of 130)

Name Tag (Equipment Description)	Tag Number	Local Area KKS ID (Room Location)	EQ Environment (Note 1)	Radiation Environment Zone (Note 2)	EQ Designated Function (Note 3)	Safety Class (Note 4)	EQ Program Designation (Note 5)	
PZR On-Off Heater Element #2 Train 2	30JEF10AH211B	30UJA18019	H	H	SII	NS-AQ	Y (1)	Y (5)
PZR On-Off Heater Element #3 Train 2	30JEF10AH211C	30UJA18019	H	H	SII	NS-AQ	Y (1)	Y (5)
PZR On-Off Heater Element #4 Train 2	30JEF10AH212A	30UJA18019	H	H	SII	NS-AQ	Y (1)	Y (5)
PZR On-Off Heater Element #5 Train 2	30JEF10AH212B	30UJA18019	H	H	SII	NS-AQ	Y (1)	Y (5)
PZR On-Off Heater Element #6 Train 2	30JEF10AH212C	30UJA18019	H	H	SII	NS-AQ	Y (1)	Y (5)
PZR On-Off Heater Element #7 Train 2	30JEF10AH213A	30UJA18019	H	H	SII	NS-AQ	Y (1)	Y (5)
PZR On-Off Heater Element #8 Train 2	30JEF10AH213B	30UJA18019	H	H	SII	NS-AQ	Y (1)	Y (5)
PZR On-Off Heater Element #9 Train 2	30JEF10AH213C	30UJA18019	H	H	SII	NS-AQ	Y (1)	Y (5)
PZR On-Off Heater Element #10 Train 2	30JEF10AH214A	30UJA18019	H	H	SII	NS-AQ	Y (1)	Y (5)
PZR On-Off Heater Element #11 Train 2	30JEF10AH214B	30UJA18019	H	H	SII	NS-AQ	Y (1)	Y (5)
PZR On-Off Heater Element #12 Train 2	30JEF10AH214C	30UJA18019	H	H	SII	NS-AQ	Y (1)	Y (5)
PZR On-Off Heater Element #13 Train 2	30JEF10AH215A	30UJA18019	H	H	SII	NS-AQ	Y (1)	Y (5)
PZR On-Off Heater Element #14 Train 2	30JEF10AH215B	30UJA18019	H	H	SII	NS-AQ	Y (1)	Y (5)
PZR On-Off Heater Element #15 Train 2	30JEF10AH215C	30UJA18019	H	H	SII	NS-AQ	Y (1)	Y (5)
PZR Prop Heater Element #1 Train 2	30JEF10AH221A	30UJA18019	H	H	SII	NS-AQ	Y (1)	Y (5)
PZR Prop Heater Element #2 Train 2	30JEF10AH221B	30UJA18019	H	H	SII	NS-AQ	Y (1)	Y (5)
PZR Prop Heater Element #3 Train 2	30JEF10AH221C	30UJA18019	H	H	SII	NS-AQ	Y (1)	Y (5)
PZR Prop Heater Element #4 Train 2	30JEF10AH222A	30UJA18019	H	H	SII	NS-AQ	Y (1)	Y (5)
PZR Prop Heater Element #5 Train 2	30JEF10AH222B	30UJA18019	H	H	SII	NS-AQ	Y (1)	Y (5)
PZR Prop Heater Element #6 Train 2	30JEF10AH222C	30UJA18019	H	H	SII	NS-AQ	Y (1)	Y (5)
PZR On-Off EPS Heater Element #1 Train 2	30JEF10AH233A	30UJA18019	H	H	SII	NS-AQ	Y (1)	Y (5)
PZR On-Off EPS Heater Element #2 Train 2	30JEF10AH233B	30UJA18019	H	H	SII	NS-AQ	Y (1)	Y (5)
PZR On-Off EPS Heater Element #3 Train 2	30JEF10AH233C	30UJA18019	H	H	SII	NS-AQ	Y (1)	Y (5)
PZR On-Off EPS Heater Element #4 Train 2	30JEF10AH234A	30UJA18019	H	H	SII	NS-AQ	Y (1)	Y (5)
PZR On-Off EPS Heater Element #5 Train 2	30JEF10AH234B	30UJA18019	H	H	SII	NS-AQ	Y (1)	Y (5)
PZR On-Off EPS Heater Element #6 Train 2	30JEF10AH234C	30UJA18019	H	H	SII	NS-AQ	Y (1)	Y (5)
PZR On-Off Heater Element #1 Train 3	30JEF10AH311A	30UJA18019	H	H	SII	NS-AQ	Y (1)	Y (5)
PZR On-Off Heater Element #2 Train 3	30JEF10AH311B	30UJA18019	H	H	SII	NS-AQ	Y (1)	Y (5)
PZR On-Off Heater Element #3 Train 3	30JEF10AH311C	30UJA18019	H	H	SII	NS-AQ	Y (1)	Y (5)
PZR On-Off Heater Element #4 Train 3	30JEF10AH312A	30UJA18019	H	H	SII	NS-AQ	Y (1)	Y (5)
PZR On-Off Heater Element #5 Train 3	30JEF10AH312B	30UJA18019	H	H	SII	NS-AQ	Y (1)	Y (5)
PZR On-Off Heater Element #6 Train 3	30JEF10AH312C	30UJA18019	H	H	SII	NS-AQ	Y (1)	Y (5)
PZR On-Off Heater Element #7 Train 3	30JEF10AH313A	30UJA18019	H	H	SII	NS-AQ	Y (1)	Y (5)

Table 3.11-1—List of Environmentally Qualified Electrical/I&C Equipment (Sheet 28 of 130)

Name Tag (Equipment Description)	Tag Number	Local Area KKS ID (Room Location)	EQ Environment (Note 1)	Radiation Environment Zone (Note 2)	EQ Designated Function (Note 3)	Safety Class (Note 4)	EQ Program Designation (Note 5)	
PZR On-Off Heater Element #8 Train 3	30JEF10AH313B	30UJA18019	H	H	SII	NS-AQ	Y (1)	Y (5)
PZR On-Off Heater Element #9 Train 3	30JEF10AH313C	30UJA18019	H	H	SII	NS-AQ	Y (1)	Y (5)
PZR On-Off Heater Element #10 Train 3	30JEF10AH314A	30UJA18019	H	H	SII	NS-AQ	Y (1)	Y (5)
PZR On-Off Heater Element #11 Train 3	30JEF10AH314B	30UJA18019	H	H	SII	NS-AQ	Y (1)	Y (5)
PZR On-Off Heater Element #12 Train 3	30JEF10AH314C	30UJA18019	H	H	SII	NS-AQ	Y (1)	Y (5)
PZR On-Off Heater Element #13 Train 3	30JEF10AH315A	30UJA18019	H	H	SII	NS-AQ	Y (1)	Y (5)
PZR On-Off Heater Element #14 Train 3	30JEF10AH315B	30UJA18019	H	H	SII	NS-AQ	Y (1)	Y (5)
PZR On-Off Heater Element #15 Train 3	30JEF10AH315C	30UJA18019	H	H	SII	NS-AQ	Y (1)	Y (5)
PZR Prop Heater Element #1 Train 3	30JEF10AH321A	30UJA18019	H	H	SII	NS-AQ	Y (1)	Y (5)
PZR Prop Heater Element #2 Train 3	30JEF10AH321B	30UJA18019	H	H	SII	NS-AQ	Y (1)	Y (5)
PZR Prop Heater Element #3 Train 3	30JEF10AH321C	30UJA18019	H	H	SII	NS-AQ	Y (1)	Y (5)
PZR Prop Heater Element #4 Train 3	30JEF10AH322A	30UJA18019	H	H	SII	NS-AQ	Y (1)	Y (5)
PZR Prop Heater Element #5 Train 3	30JEF10AH322B	30UJA18019	H	H	SII	NS-AQ	Y (1)	Y (5)
PZR Prop Heater Element #6 Train 3	30JEF10AH322C	30UJA18019	H	H	SII	NS-AQ	Y (1)	Y (5)
PZR On-Off EPS Heater Element #1 Train 3	30JEF10AH331A	30UJA18019	H	H	SII	NS-AQ	Y (1)	Y (5)
PZR On-Off EPS Heater Element #2 Train 3	30JEF10AH331B	30UJA18019	H	H	SII	NS-AQ	Y (1)	Y (5)
PZR On-Off EPS Heater Element #3 Train 3	30JEF10AH331C	30UJA18019	H	H	SII	NS-AQ	Y (1)	Y (5)
PZR On-Off EPS Heater Element #4 Train 3	30JEF10AH332A	30UJA18019	H	H	SII	NS-AQ	Y (1)	Y (5)
PZR On-Off EPS Heater Element #5 Train 3	30JEF10AH332B	30UJA18019	H	H	SII	NS-AQ	Y (1)	Y (5)
PZR On-Off EPS Heater Element #6 Train 3	30JEF10AH332C	30UJA18019	H	H	SII	NS-AQ	Y (1)	Y (5)
PZR On-Off Heater Element #1 Train 4	30JEF10AH411A	30UJA18019	H	H	SII	NS-AQ	Y (1)	Y (5)
PZR On-Off Heater Element #2 Train 4	30JEF10AH411B	30UJA18019	H	H	SII	NS-AQ	Y (1)	Y (5)
PZR On-Off Heater Element #3 Train 4	30JEF10AH411C	30UJA18019	H	H	SII	NS-AQ	Y (1)	Y (5)
PZR On-Off Heater Element #4 Train 4	30JEF10AH412A	30UJA18019	H	H	SII	NS-AQ	Y (1)	Y (5)
PZR On-Off Heater Element #5 Train 4	30JEF10AH412B	30UJA18019	H	H	SII	NS-AQ	Y (1)	Y (5)
PZR On-Off Heater Element #6 Train 4	30JEF10AH412C	30UJA18019	H	H	SII	NS-AQ	Y (1)	Y (5)
PZR On-Off Heater Element #7 Train 4	30JEF10AH413A	30UJA18019	H	H	SII	NS-AQ	Y (1)	Y (5)
PZR On-Off Heater Element #8 Train 4	30JEF10AH413B	30UJA18019	H	H	SII	NS-AQ	Y (1)	Y (5)
PZR On-Off Heater Element #9 Train 4	30JEF10AH413C	30UJA18019	H	H	SII	NS-AQ	Y (1)	Y (5)
PZR On-Off Heater Element #10 Train 4	30JEF10AH414A	30UJA18019	H	H	SII	NS-AQ	Y (1)	Y (5)
PZR On-Off Heater Element #11 Train 4	30JEF10AH414B	30UJA18019	H	H	SII	NS-AQ	Y (1)	Y (5)
PZR On-Off Heater Element #12 Train 4	30JEF10AH414C	30UJA18019	H	H	SII	NS-AQ	Y (1)	Y (5)
PZR Prop Heater Element #1 Train 4	30JEF10AH421A	30UJA18019	H	H	SII	NS-AQ	Y (1)	Y (5)

Table 3.11-1—List of Environmentally Qualified Electrical/I&C Equipment (Sheet 29 of 130)

Name Tag (Equipment Description)	Tag Number	Local Area KKS ID (Room Location)	EQ Environment (Note 1)	Radiation Environment Zone (Note 2)	EQ Designated Function (Note 3)				Safety Class (Note 4)			EQ Program Designation (Note 5)	
PZR Prop Heater Element #2 Train 4	30JEF10AH421B	30UJA18019	H	H				SII	NS-AQ			Y (1)	Y (5)
PZR Prop Heater Element #3 Train 4	30JEF10AH421C	30UJA18019	H	H				SII	NS-AQ			Y (1)	Y (5)
PZR Prop Heater Element #4 Train 4	30JEF10AH422A	30UJA18019	H	H				SII	NS-AQ			Y (1)	Y (5)
PZR Prop Heater Element #5 Train 4	30JEF10AH422B	30UJA18019	H	H				SII	NS-AQ			Y (1)	Y (5)
PZR Prop Heater Element #6 Train 4	30JEF10AH422C	30UJA18019	H	H				SII	NS-AQ			Y (1)	Y (5)
PZR Prop Heater Element #7 Train 4	30JEF10AH423A	30UJA18019	H	H				SII	NS-AQ			Y (1)	Y (5)
PZR Prop Heater Element #8 Train 4	30JEF10AH423B	30UJA18019	H	H				SII	NS-AQ			Y (1)	Y (5)
PZR Prop Heater Element #9 Train 4	30JEF10AH423C	30UJA18019	H	H				SII	NS-AQ			Y (1)	Y (5)
PZR On-Off EPS Heater Element #1 Train 4	30JEF10AH433A	30UJA18019	H	H				SII	NS-AQ			Y (1)	Y (5)
PZR On-Off EPS Heater Element #2 Train 4	30JEF10AH433B	30UJA18019	H	H				SII	NS-AQ			Y (1)	Y (5)
PZR On-Off EPS Heater Element #3 Train 4	30JEF10AH433C	30UJA18019	H	H				SII	NS-AQ			Y (1)	Y (5)
PZR On-Off EPS Heater Element #4 Train 4	30JEF10AH434A	30UJA18019	H	H				SII	NS-AQ			Y (1)	Y (5)
PZR On-Off EPS Heater Element #5 Train 4	30JEF10AH434B	30UJA18019	H	H				SII	NS-AQ			Y (1)	Y (5)
PZR On-Off EPS Heater Element #6 Train 4	30JEF10AH434C	30UJA18019	H	H				SII	NS-AQ			Y (1)	Y (5)
PSRV #1 Position Sensor	30JEF10CG191B	30UJA34019	H	H			PAM	SI	NS-AQ		EMC	Y (1)	Y (5)
PSRV #2 Position Sensor	30JEF10CG192B	30UJA34019	H	H			PAM	SI	NS-AQ		EMC	Y (1)	Y (5)
PSRV #3 Position Sensor	30JEF10CG193B	30UJA34019	H	H			PAM	SI	NS-AQ		EMC	Y (1)	Y (5)
PZR/RCS Level Sensor #1	30JEF10CL081	30UJA15008	H	H				SII	NS-AQ		EMC	Y (1)	Y (5)
PZR/RCS Level Sensor #2	30JEF10CL782	30UJA15008	H	H				SII	NS-AQ		EMC	Y (1)	Y (5)
PZR Level Sensor #1	30JEF10CL802	30UJA15009	H	H	RT		PAM	SI	S	1E	EMC	Y (1)	Y (5)
PZR Level Sensor #2	30JEF10CL804	30UJA15009	H	H	RT		PAM	SI	S	1E	EMC	Y (1)	Y (5)
PZR Level Sensor #3	30JEF10CL806	30UJA15009	H	H	RT		PAM	SI	S	1E	EMC	Y (1)	Y (5)
PZR Level Sensor #4	30JEF10CL808	30UJA15009	H	H	RT		PAM	SI	S	1E	EMC	Y (1)	Y (5)
PZR Vacuum Press Sensor	30JEF10CP007	30UJA29019	H	H				SII	NS-AQ		EMC	Y (1)	Y (5)
PZR NR Press Sensor #1	30JEF10CP801	30UJA18019	H	H	RT	ES		SI	S	1E	EMC	Y (1)	Y (5)
PZR NR Press Sensor #2	30JEF10CP803	30UJA18019	H	H	RT	ES		SI	S	1E	EMC	Y (1)	Y (5)
PZR NR Press Sensor #3	30JEF10CP805	30UJA18019	H	H	RT	ES		SI	S	1E	EMC	Y (1)	Y (5)
PZR NR Press Sensor #4	30JEF10CP807	30UJA18019	H	H	RT	ES		SI	S	1E	EMC	Y (1)	Y (5)
PZR Steam Temp Sensor	30JEF10CT050	30UJA29019	H	H				SII	NS-AQ		EMC	Y (1)	Y (5)
PZR Spray Temp Sensor #1	30JEF10CT054	30UJA29019	H	H				SII	NS-AQ		EMC	Y (1)	Y (5)
PZR Spray Temp Sensor #2	30JEF10CT055	30UJA29019	H	H				SII	NS-AQ		EMC	Y (1)	Y (5)
PZR Water Temp Sensor	30JEF10CT057	30UJA18019	H	H				SII	NS-AQ		EMC	Y (1)	Y (5)
PSRV #1 Relief Line Temp Sensor	30JEF10CT061	30UJA34019	H	H				SII	NS-AQ		EMC	Y (1)	Y (5)

Table 3.11-1—List of Environmentally Qualified Electrical/I&C Equipment (Sheet 30 of 130)

Name Tag (Equipment Description)	Tag Number	Local Area KKS ID (Room Location)	EQ Environment (Note 1)	Radiation Environment Zone (Note 2)	EQ Designated Function (Note 3)	Safety Class (Note 4)	EQ Program Designation (Note 5)
PSRV #2 Relief Line Temp Sensor	30JEF10CT062	30UJA34019	H	H	SII	NS-AQ EMC	Y (1) Y (5)
PSRV #3 Relief Line Temp Sensor	30JEF10CT063	30UJA34019	H	H	SII	NS-AQ EMC	Y (1) Y (5)
PDS Vlv Temp Sensor	30JEF10CT064	30UJA34019	H	H	SII	NS-AQ EMC	Y (1) Y (5)
PSRV #1 Temp Sensor #1	30JEG10CT013	30UJA34019	H	H	SII	NS-AQ EMC	Y (1) Y (5)
PSRV #1 Temp Sensor #2	30JEG10CT016	30UJA34019	H	H	SII	NS-AQ EMC	Y (1) Y (5)
PSRV #1 Temp Sensor #3	30JEG10CT017	30UJA34019	H	H	SII	NS-AQ EMC	Y (1) Y (5)
PSRV #2 Temp Sensor #1	30JEG10CT023	30UJA34019	H	H	SII	NS-AQ EMC	Y (1) Y (5)
PSRV #2 Temp Sensor #2	30JEG10CT026	30UJA34019	H	H	SII	NS-AQ EMC	Y (1) Y (5)
PSRV #2 Temp Sensor #3	30JEG10CT027	30UJA34019	H	H	SII	NS-AQ EMC	Y (1) Y (5)
PSRV #3 Temp Sensor #1	30JEG10CT033	30UJA34019	H	H	SII	NS-AQ EMC	Y (1) Y (5)
PSRV #3 Temp Sensor #2	30JEG10CT036	30UJA34019	H	H	SII	NS-AQ EMC	Y (1) Y (5)
PSRV #3 Temp Sensor #3	30JEG10CT037	30UJA34019	H	H	SII	NS-AQ EMC	Y (1) Y (5)
Pressurizer Relief System							
PZR Vacuum Pump/N2 Vlv #1 Actuator	30JEF10AA501	30UJA34019	H	H	SII	NS-AQ EMC	Y (1) Y (5)
PZR Vacuum Pump/N2 Vlv #2 Actuator	30JEF10AA502	30UJA34019	H	H	SII	NS-AQ EMC	Y (1) Y (5)
PZR Degassing Vlv #1 Actuator	30JEF10AA503	30UJA34019	H	H	SII	NS-AQ EMC	Y (1) Y (5)
PZR Degassing Vlv #2 Actuator	30JEF10AA504	30UJA34019	H	H	SII	NS-AQ EMC	Y (1) Y (5)
PRT Cooling Iso Vlv Actuator	30JEG10AA012	30UJA15018	H	H	SII	NS-AQ EMC	Y (1) Y (5)
PRT Tank Filling Iso Vlv Actuator	30JEG10AA013	30UJA15018	H	H	SII	NS-AQ EMC	Y (1) Y (5)
PRT Vent Iso. Vlv Actuator	30JEG10AA014	30UJA11019	H	H	SII	NS-AQ EMC	Y (1) Y (5)
PZR Degassing Vent Iso Vlv Actuator	30JEG10AA025	30UJA11019	H	H	SII	NS-AQ EMC	Y (1) Y (5)
PRT Drain Vlv Actuator	30JEG10AA401	30UJA11019	H	H	SII	NS-AQ EMC	Y (1) Y (5)
PRT Level Sensor #1	30JEG10CL051	30UJA11019	H	H	SII	NS-AQ EMC	Y (1) Y (5)
PRT Level Sensor #2	30JEG10CL151	30UJA11019	H	H	SII	NS-AQ EMC	Y (1) Y (5)
PRT Press Sensor #1	30JEG10CP061	30UJA11019	H	H	SII	NS-AQ EMC	Y (1) Y (5)
PRT Press Sensor #2	30JEG10CP161	30UJA11019	H	H	SII	NS-AQ EMC	Y (1) Y (5)
PRT Temp Sensor #1	30JEG10CT021	30UJA11019	H	H	SII	NS-AQ EMC	Y (1) Y (5)
PRT Temp Sensor #2	30JEG10CT121	30UJA11019	H	H	SII	NS-AQ EMC	Y (1) Y (5)
Safety Injection & Residual Heat Removal System (SIS & RHRS)							
RHR 1st RCPB Iso. Valve Actuator	30JNA10AA001	30UJA11003	H	H	ES SI	S 1E EMC	Y (1) Y (5)
RHR 2nd RCPB Iso. Valve Actuator	30JNA10AA002	30UJA11025	H	H	ES PAM SI	S 1E EMC	Y (1) Y (5)
RHR Outside Cont. Iso. Valve Actuator	30JNA10AA003	31UJH05004	M	H	ES PAM SI	S 1E EMC	Y (2) Y (5) Y (6)

Table 3.11-1—List of Environmentally Qualified Electrical/I&C Equipment (Sheet 31 of 130)

Name Tag (Equipment Description)	Tag Number	Local Area KKS ID (Room Location)	EQ Environment (Note 1)	Radiation Environment Zone (Note 2)	EQ Designated Function (Note 3)			Safety Class (Note 4)			EQ Program Designation (Note 5)			
LHSI HX Bypass Control Valve Actuator	30JNA10AA101	31UJH05004	M	H	ES		SI	S	1E	EMC		Y (2)	Y (5)	Y (6)
RHR 1st RCPB Iso. Valve Actuator	30JNA20AA001	30UJA11004	H	H	ES		SI	S	1E	EMC	Y (1)		Y (5)	
RHR 2nd RCPB Iso. Valve Actuator	30JNA20AA002	30UJA11026	H	H	ES	PAM	SI	S	1E	EMC	Y (1)		Y (5)	
RHR Outside Cont. Iso. Valve Actuator	30JNA20AA003	32UJH05002	M	H	ES	PAM	SI	S	1E	EMC		Y (2)	Y (5)	Y (6)
LHSI HX Bypass Control Valve Actuator	30JNA20AA101	32UJH05002	M	H	ES		SI	S	1E	EMC		Y (2)	Y (5)	Y (6)
RHR 1st RCPB Iso. Valve Actuator	30JNA30AA001	30UJA11007	H	H	ES		SI	S	1E	EMC	Y (1)		Y (5)	
RHR 2nd RCPB Iso. Valve Actuator	30JNA30AA002	30UJA11027	H	H	ES	PAM	SI	S	1E	EMC	Y (1)		Y (5)	
RHR Outside Cont. Iso. Valve Actuator	30JNA30AA003	33UJH05002	M	H	ES	PAM	SI	S	1E	EMC		Y (2)	Y (5)	Y (6)
HX Byp. Iso. Valve Act. on Puri. to CVCS	30JNA30AA004	33UJH05002	M	H	ES		SI	S	1E	EMC		Y (2)	Y (5)	Y (6)
LHSI HX Bypass Control Valve Actuator	30JNA30AA101	33UJH05002	M	H	ES		SI	S	1E	EMC		Y (2)	Y (5)	Y (6)
HX Byp. Thr. Valve Act. on Puri. to CVCS	30JNA30AA103	33UJH05002	M	H	ES		SI	S	1E	EMC		Y (2)	Y (5)	Y (6)
RHR 1st RCPB Iso. Valve Actuator	30JNA40AA001	30UJA11008	H	H	ES		SI	S	1E	EMC	Y (1)		Y (5)	
RHR 2nd RCPB Iso. Valve Actuator	30JNA40AA002	30UJA11028	H	H	ES	PAM	SI	S	1E	EMC	Y (1)		Y (5)	
RHR Outside Cont. Iso. Valve Actuator	30JNA40AA003	34UJH05004	M	H	ES	PAM	SI	S	1E	EMC		Y (2)	Y (5)	Y (6)
HX Byp. Iso. Valve Act. on Puri. to CVCS	30JNA40AA004	34UJH05004	M	H	ES		SI	S	1E	EMC		Y (2)	Y (5)	Y (6)
LHSI HX Bypass Control Valve Actuator	30JNA40AA101	34UJH05004	M	H	ES		SI	S	1E	EMC		Y (2)	Y (5)	Y (6)
HX Byp. Thr. Valve Act. on Puri. to CVCS	30JNA40AA103	34UJH05004	M	H	ES		SI	S	1E	EMC		Y (2)	Y (5)	Y (6)
MHSI Outside Cont. Iso. Valve Actuator	30JND10AA002	31UJH05004	M	H	ES	PAM	SI	S	1E	EMC		Y (2)	Y (5)	Y (6)
MHSI Small Miniflow Iso. Valve Actuator	30JND10AA004	30UJA07014	H	H	ES		SI	S	1E	EMC	Y (1)		Y (5)	
MHSI Large Miniflow Iso. Valve Actuator	30JND10AA005	30UJA07014	H	H	ES		SI	S	1E	EMC	Y (1)		Y (5)	
MHSI Control Valve Actuator	30JND10AA103	30UJA11013	H	H	ES		SI	S	1E	EMC	Y (1)		Y (5)	
MHSI Pump Motor	30JND10AP001	31UJH01002	M	H	ES		SI	S	1E	EMC		Y (2)	Y (5)	Y (6)
MHSI Outside Cont. Iso. Valve Actuator	30JND20AA002	32UJH05002	M	H	ES	PAM	SI	S	1E	EMC		Y (2)	Y (5)	Y (6)
MHSI Small Miniflow Iso. Valve Actuator	30JND20AA004	30UJA07014	H	H	ES		SI	S	1E	EMC	Y (1)		Y (5)	
MHSI Large Miniflow Iso. Valve Actuator	30JND20AA005	30UJA07014	H	H	ES		SI	S	1E	EMC	Y (1)		Y (5)	
MHSI Control Valve Actuator	30JND20AA103	30UJA11014	H	H	ES		SI	S	1E	EMC	Y (1)		Y (5)	
MHSI Pump Motor	30JND20AP001	32UJH01007	M	H	ES		SI	S	1E	EMC		Y (2)	Y (5)	Y (6)
MHSI Outside Cont. Iso. Valve Actuator	30JND30AA002	33UJH05002	M	H	ES	PAM	SI	S	1E	EMC		Y (2)	Y (5)	Y (6)
MHSI Small Miniflow Iso. Valve Actuator	30JND30AA004	30UJA07015	H	H	ES		SI	S	1E	EMC	Y (1)		Y (5)	
MHSI Large Miniflow Iso. Valve Actuator	30JND30AA005	30UJA07015	H	H	ES		SI	S	1E	EMC	Y (1)		Y (5)	
MHSI Control Valve Actuator	30JND30AA103	30UJA11015	H	H	ES		SI	S	1E	EMC	Y (1)		Y (5)	
MHSI Pump Motor	30JND30AP001	33UJH01007	M	H	ES		SI	S	1E	EMC		Y (2)	Y (5)	Y (6)
MHSI Outside Cont. Iso. Valve Actuator	30JND40AA002	34UJH05004	M	H	ES	PAM	SI	S	1E	EMC		Y (2)	Y (5)	Y (6)

Table 3.11-1—List of Environmentally Qualified Electrical/I&C Equipment (Sheet 32 of 130)

Name Tag (Equipment Description)	Tag Number	Local Area KKS ID (Room Location)	EQ Environment (Note 1)	Radiation Environment Zone (Note 2)	EQ Designated Function (Note 3)			Safety Class (Note 4)			EQ Program Designation (Note 5)			
MHSI Small Miniflow Iso. Valve Actuator	30JND40AA004	30UJA07015	H	H	ES		SI	S	1E	EMC	Y (1)		Y (5)	
MHSI Large Miniflow Iso. Valve Actuator	30JND40AA005	30UJA07015	H	H	ES		SI	S	1E	EMC	Y (1)		Y (5)	
MHSI Control Valve Actuator	30JND40AA103	30UJA11016	H	H	ES		SI	S	1E	EMC	Y (1)		Y (5)	
MHSI Pump Motor	30JND40AP001	34UJH01002	M	H	ES		SI	S	1E	EMC		Y (2)	Y (5)	Y (6)
LHSI Suction Isolation Valve Actuator	30JNG10AA001	31UJH01005	M	H	ES		SI	S	1E	EMC		Y (2)	Y (5)	Y (6)
LHSI Rad. Miniflow Check Valve Actuator	30JNG10AA003	30UJA07014	H	H	ES		SI	S	1E	EMC	Y (1)		Y (5)	
LHSI Tan. Miniflow Check Valve Actuator	30JNG10AA004	30UJA07014	H	H	ES		SI	S	1E	EMC	Y (1)		Y (5)	
LHSI Cross-Connect Iso. Valve Actuator	30JNG10AA010	30UJA11013	H	H	ES		SI	S	1E	EMC	Y (1)		Y (5)	
LHSI Out. Cont. Main Iso. Valve Actuator	30JNG10AA060	31UJH05004	M	H	ES	PAM	SI	S	1E	EMC		Y (2)	Y (5)	Y (6)
LHSI Out. Cont. Bypass Iso. Valve Act.	30JNG10AA061	31UJH05004	M	H	ES	PAM	SI	S	1E	EMC		Y (2)	Y (5)	Y (6)
LHSI HX Main Control Valve Actuator	30JNG10AA102	31UJH05004	M	H	ES		SI	S	1E	EMC		Y (2)	Y (5)	Y (6)
LHSI Control Valve Actuator	30JNG10AA106	30UJA11013	H	H	ES		SI	S	1E	EMC	Y (1)		Y (5)	
LHSI Sampling Line Iso. Valve Actuator	30JNG10AA601	31UJH05004	M	H			SI	S	1E	EMC		Y (2)	Y (5)	Y (6)
LHSI Sampling Line Iso. Valve Actuator	30JNG10AA602	31UJH05005	M	H			SI	S	1E	EMC		Y (2)	Y (5)	Y (6)
LHSI Sampling Line Iso. Valve Actuator	30JNG10AA603	31UJH05005	M	H			SI	S	1E	EMC		Y (2)	Y (5)	Y (6)
LHSI Pump Motor	30JNG10AP001	31UJH01006	M	H	ES		SI	S	1E	EMC		Y (2)	Y (5)	Y (6)
LHSI HL Injection Iso. Valve Actuator	30JNG12AA001	31UJH05004	M	H	ES	PAM	SI	S	1E	EMC		Y (2)	Y (5)	Y (6)
Accum. Filling Line Iso. Valve Actuator	30JNG13AA002	30UJA07014	H	H	ES		SI	S	1E	EMC	Y (1)		Y (5)	
Accum.-Nitrogen Dist. Iso. Valve Act.	30JNG13AA006	30UJA23013	H	H			SII	NS-AQ		EMC	Y (1)		Y (5)	
Accumulator Isolation Valve Actuator	30JNG13AA008	30UJA11025	H	H	ES	PAM	SI	S	1E	EMC	Y (1)		Y (5)	
Accum. Depress. Control Valve Actuator	30JNG13AA101	30UJA23013	H	H			SII	NS-AQ		EMC	Y (1)		Y (5)	
Accum. Depress. Iso. Valve Actuator	30JNG13AA502	30UJA23013	H	H			SII	NS-AQ		EMC	Y (1)		Y (5)	
Accum. Sampling Line Iso. Valve Act.	30JNG13AA602	30UJA15013	H	H			SII	NS-AQ		EMC	Y (1)		Y (5)	
Dead Leg Pressurization Valve Actuator	30JNG15AA001	30UJA11003	H	H	ES		SI	S	1E	EMC	Y (1)		Y (5)	
RCS Suct. Line Press. Valve Actuator	30JNG15AA002	30UJA11003	H	H	ES		SI	S	1E	EMC	Y (1)		Y (5)	
Dead Leg Press. Bypass Iso. Valve Act.	30JNG15AA003	30UJA11003	H	H	ES		SI	S	1E	EMC	Y (1)		Y (5)	
Dead Leg Press. Control Iso. Valve Act.	30JNG15AA004	30UJA07014	H	H	ES	PAM	SI	S	1E	EMC	Y (1)		Y (5)	
LHSI Suction Isolation Valve Actuator	30JNG20AA001	32UJH01008	M	H	ES		SI	S	1E	EMC		Y (2)	Y (5)	Y (6)
LHSI Rad. Miniflow Check Valve Actuator	30JNG20AA003	30UJA07014	H	H	ES		SI	S	1E	EMC	Y (1)		Y (5)	
LHSI Tan. Miniflow Check Valve Actuator	30JNG20AA004	30UJA07014	H	H	ES		SI	S	1E	EMC	Y (1)		Y (5)	
LHSI Cross-Connect Iso. Valve Actuator	30JNG20AA010	30UJA11014	H	H	ES		SI	S	1E	EMC	Y (1)		Y (5)	
LHSI Out. Cont. Main Iso. Valve Actuator	30JNG20AA060	32UJH05002	M	H	ES	PAM	SI	S	1E	EMC		Y (2)	Y (5)	Y (6)
LHSI Out. Cont. Bypass Iso. Valve Act.	30JNG20AA061	32UJH05002	M	H	ES	PAM	SI	S	1E	EMC		Y (2)	Y (5)	Y (6)

Table 3.11-1—List of Environmentally Qualified Electrical/I&C Equipment (Sheet 33 of 130)

Name Tag (Equipment Description)	Tag Number	Local Area KKS ID (Room Location)	EQ Environment (Note 1)	Radiation Environment Zone (Note 2)	EQ Designated Function (Note 3)			Safety Class (Note 4)			EQ Program Designation (Note 5)			
LHSI HX Main Control Valve Actuator	30JNG20AA102	32UJH05002	M	H	ES		SI	S	1E	EMC		Y (2)	Y (5)	Y (6)
LHSI Control Valve Actuator	30JNG20AA106	30UJA11014	H	H	ES		SI	S	1E	EMC	Y (1)		Y (5)	
LHSI Sampling Line Iso. Valve Actuator	30JNG20AA601	32UJH05002	M	H			SI	S	1E	EMC		Y (2)	Y (5)	Y (6)
LHSI Sampling Line Iso. Valve Actuator	30JNG20AA602	32UJH05006	M	H			SI	S	1E	EMC		Y (2)	Y (5)	Y (6)
LHSI Sampling Line Iso. Valve Actuator	30JNG20AA603	32UJH05006	M	H			SI	S	1E	EMC		Y (2)	Y (5)	Y (6)
LHSI Pump Motor	30JNG20AP001	32UJH01009	M	H	ES		SI	S	1E	EMC		Y (2)	Y (5)	Y (6)
LHSI HL Injection Iso. Valve Actuator	30JNG22AA001	32UJH05002	M	H	ES	PAM	SI	S	1E	EMC		Y (2)	Y (5)	Y (6)
Accum. Filling Line Iso. Valve Actuator	30JNG23AA002	30UJA07014	H	H	ES		SI	S	1E	EMC	Y (1)		Y (5)	
Accum.-Nitrogen Dist. Iso. Valve Act.	30JNG23AA006	30UJA23014	H	H			SII	NS-AQ		EMC	Y (1)		Y (5)	
Accumulator Isolation Valve Actuator	30JNG23AA008	30UJA11026	H	H	ES	PAM	SI	S	1E	EMC	Y (1)		Y (5)	
Accum. Depress. Control Valve Actuator	30JNG23AA101	30UJA23014	H	H			SII	NS-AQ		EMC	Y (1)		Y (5)	
Accum. Depress. Iso. Valve Actuator	30JNG23AA502	30UJA23014	H	H			SII	NS-AQ		EMC	Y (1)		Y (5)	
Accum. Sampling Line Iso. Valve Act.	30JNG23AA602	30UJA15014	H	H			SII	NS-AQ		EMC	Y (1)		Y (5)	
Dead Leg Pressurization Valve Actuator	30JNG25AA001	30UJA11004	H	H	ES		SI	S	1E	EMC	Y (1)		Y (5)	
RCS Suct. Line Press. Valve Actuator	30JNG25AA002	30UJA11004	H	H	ES		SI	S	1E	EMC	Y (1)		Y (5)	
Dead Leg Press. Bypass Iso. Valve Act.	30JNG25AA003	30UJA11004	H	H	ES		SI	S	1E	EMC	Y (1)		Y (5)	
Dead Leg Press. Control Iso. Valve Act.	30JNG25AA004	30UJA07014	H	H	ES	PAM	SI	S	1E	EMC	Y (1)		Y (5)	
LHSI Suction Isolation Valve Actuator	30JNG30AA001	33UJH01008	M	H	ES		SI	S	1E	EMC		Y (2)	Y (5)	Y (6)
LHSI Rad. Miniflow Check Valve Actuator	30JNG30AA003	30UJA07015	H	H	ES		SI	S	1E	EMC	Y (1)		Y (5)	
LHSI Tan. Miniflow Check Valve Actuator	30JNG30AA004	30UJA07015	H	H	ES		SI	S	1E	EMC	Y (1)		Y (5)	
LHSI Cross-Connect Iso. Valve Actuator	30JNG30AA010	30UJA11015	H	H	ES		SI	S	1E	EMC	Y (1)		Y (5)	
LHSI Out. Cont. Main Iso. Valve Actuator	30JNG30AA060	33UJH05002	M	H	ES	PAM	SI	S	1E	EMC		Y (2)	Y (5)	Y (6)
LHSI Out. Cont. Bypass Iso. Valve Act.	30JNG30AA061	33UJH05002	M	H	ES	PAM	SI	S	1E	EMC		Y (2)	Y (5)	Y (6)
LHSI HX Main Control Valve Actuator	30JNG30AA102	33UJH05002	M	H	ES		SI	S	1E	EMC		Y (2)	Y (5)	Y (6)
LHSI Control Valve Actuator	30JNG30AA106	30UJA11015	H	H	ES		SI	S	1E	EMC	Y (1)		Y (5)	
LHSI Sampling Line Iso. Valve Actuator	30JNG30AA601	33UJH05002	M	H			SI	S	1E	EMC		Y (2)	Y (5)	Y (6)
LHSI Sampling Line Iso. Valve Actuator	30JNG30AA602	33UJH05006	M	H			SI	S	1E	EMC		Y (2)	Y (5)	Y (6)
LHSI Sampling Line Iso. Valve Actuator	30JNG30AA603	33UJH05006	M	H			SI	S	1E	EMC		Y (2)	Y (5)	Y (6)
LHSI Pump Motor	30JNG30AP001	33UJH01009	M	H	ES		SI	S	1E	EMC		Y (2)	Y (5)	Y (6)
LHSI HL Injection Iso. Valve Actuator	30JNG32AA001	33UJH05002	M	H	ES	PAM	SI	S	1E	EMC		Y (2)	Y (5)	Y (6)
Accum. Filling Line Iso. Valve Actuator	30JNG33AA002	30UJA07015	H	H	ES		SI	S	1E	EMC	Y (1)		Y (5)	
Accum.-Nitrogen Dist. Iso. Valve Act.	30JNG33AA006	30UJA23015	H	H			SII	NS-AQ		EMC	Y (1)		Y (5)	
Accumulator Isolation Valve Actuator	30JNG33AA008	30UJA11027	H	H	ES	PAM	SI	S	1E	EMC	Y (1)		Y (5)	

Table 3.11-1—List of Environmentally Qualified Electrical/I&C Equipment (Sheet 34 of 130)

Name Tag (Equipment Description)	Tag Number	Local Area KKS ID (Room Location)	EQ Environment (Note 1)	Radiation Environment Zone (Note 2)	EQ Designated Function (Note 3)			Safety Class (Note 4)			EQ Program Designation (Note 5)			
Accum. Depress. Control Valve Actuator	30JNG33AA101	30UJA23015	H	H			SII	NS-AQ		EMC	Y (1)		Y (5)	
Accum. Depress. Iso. Valve Actuator	30JNG33AA502	30UJA23015	H	H			SII	NS-AQ		EMC	Y (1)		Y (5)	
Accum. Sampling Line Iso. Valve Act.	30JNG33AA602	30UJA15015	H	H			SII	NS-AQ		EMC	Y (1)		Y (5)	
Dead Leg Pressurization Valve Actuator	30JNG35AA001	30UJA11007	H	H	ES		SI	S	1E	EMC	Y (1)		Y (5)	
RCS Suct. Line Press. Valve Actuator	30JNG35AA002	30UJA11007	H	H	ES		SI	S	1E	EMC	Y (1)		Y (5)	
Dead Leg Press. Bypass Iso. Valve Act.	30JNG35AA003	30UJA11007	H	H	ES		SI	S	1E	EMC	Y (1)		Y (5)	
Dead Leg Press. Control Iso. Valve Act.	30JNG35AA004	30UJA07015	H	H	ES	PAM	SI	S	1E	EMC	Y (1)		Y (5)	
LHSI Suction Isolation Valve Actuator	30JNG40AA001	34UJH01005	M	H	ES		SI	S	1E	EMC		Y (2)	Y (5)	Y (6)
LHSI Rad. Miniflow Check Valve Actuator	30JNG40AA003	30UJA07015	H	H	ES		SI	S	1E	EMC	Y (1)		Y (5)	
LHSI Tan. Miniflow Check Valve Actuator	30JNG40AA004	30UJA07015	H	H	ES		SI	S	1E	EMC	Y (1)		Y (5)	
SAHRS-IRWST 1st Iso. Valve Actuator	30JNG40AA007	34UJH01006	M	H	ES		SI	S	1E	EMC		Y (2)	Y (5)	Y (6)
SAHRS-IRWST 2nd Iso. Valve Actuator	30JNG40AA008	34UJH01006	M	H	ES		SI	S	1E	EMC		Y (2)	Y (5)	Y (6)
LHSI Cross-Connect Iso. Valve Actuator	30JNG40AA010	30UJA11016	H	H	ES		SI	S	1E	EMC	Y (1)		Y (5)	
LHSI Out. Cont. Main Iso. Valve Actuator	30JNG40AA060	34UJH05004	M	H	ES	PAM	SI	S	1E	EMC		Y (2)	Y (5)	Y (6)
LHSI Out. Cont. Bypass Iso. Valve Act.	30JNG40AA061	34UJH05004	M	H	ES	PAM	SI	S	1E	EMC		Y (2)	Y (5)	Y (6)
LHSI HX Main Control Valve Actuator	30JNG40AA102	34UJH05004	M	H	ES		SI	S	1E	EMC		Y (2)	Y (5)	Y (6)
LHSI Control Valve Actuator	30JNG40AA106	30UJA11016	H	H	ES		SI	S	1E	EMC	Y (1)		Y (5)	
LHSI Sampling Line Iso. Valve Actuator	30JNG40AA601	34UJH05004	M	H			SI	S	1E	EMC		Y (2)	Y (5)	Y (6)
LHSI Sampling Line Iso. Valve Actuator	30JNG40AA602	34UJH05005	M	H			SI	S	1E	EMC		Y (2)	Y (5)	Y (6)
LHSI Sampling Line Iso. Valve Actuator	30JNG40AA603	34UJH05005	M	H			SI	S	1E	EMC		Y (2)	Y (5)	Y (6)
LHSI Pump Motor	30JNG40AP001	34UJH01006	M	H	ES		SI	S	1E	EMC		Y (2)	Y (5)	Y (6)
LHSI HL Injection Iso. Valve Actuator	30JNG42AA001	34UJH05004	M	H	ES	PAM	SI	S	1E	EMC		Y (2)	Y (5)	Y (6)
Accum. Filling Line Iso. Valve Actuator	30JNG43AA002	30UJA07015	H	H	ES		SI	S	1E	EMC	Y (1)		Y (5)	
Accum.-Nitrogen Dist. Iso. Valve Act.	30JNG43AA006	30UJA23016	H	H			SII	NS-AQ		EMC	Y (1)		Y (5)	
Accumulator Isolation Valve Actuator	30JNG43AA008	30UJA11028	H	H	ES	PAM	SI	S	1E	EMC	Y (1)		Y (5)	
Accum. Depress. Control Valve Actuator	30JNG43AA101	30UJA23016	H	H			SII	NS-AQ		EMC	Y (1)		Y (5)	
Accum. Depress. Iso. Valve Actuator	30JNG43AA502	30UJA23016	H	H			SII	NS-AQ		EMC	Y (1)		Y (5)	
Accum. Sampling Line Iso. Valve Act.	30JNG43AA602	30UJA15016	H	H			SII	NS-AQ		EMC	Y (1)		Y (5)	
Dead Leg Pressurization Valve Actuator	30JNG45AA001	30UJA11008	H	H	ES		SI	S	1E	EMC	Y (1)		Y (5)	
RCS Suct. Line Press. Valve Actuator	30JNG45AA002	30UJA11008	H	H	ES		SI	S	1E	EMC	Y (1)		Y (5)	
Dead Leg Press. Bypass Iso. Valve Act.	30JNG45AA003	30UJA11008	H	H	ES		SI	S	1E	EMC	Y (1)		Y (5)	
Dead Leg Press. Control Iso. Valve Act.	30JNG45AA004	30UJA07015	H	H	ES	PAM	SI	S	1E	EMC	Y (1)		Y (5)	
LHSI HX Byp. Control Valve Pos. Sensor	30JNA10CG101	31UJH05004	M	H	ES		SI	S	1E	EMC		Y (2)	Y (5)	Y (6)

Table 3.11-1—List of Environmentally Qualified Electrical/I&C Equipment (Sheet 35 of 130)

Name Tag (Equipment Description)	Tag Number	Local Area KKS ID (Room Location)	EQ Environment (Note 1)	Radiation Environment Zone (Note 2)	EQ Designated Function (Note 3)				Safety Class (Note 4)			EQ Program Designation (Note 5)			
RHR Suct. Line Safety Valve Pos. Sensor	30JNA10CG191B	30UJA11025	H	H		ES		SI	S	1E	EMC	Y (1)		Y (5)	
SAB Sump Level Sensor 1	30JNA10CL801	31UJH10004	M	H				SII	NS-AQ		EMC		Y (2)	Y (5)	Y (6)
SAB Sump Level Sensor 2	30JNA10CL802	31UJH10004	M	H				SII	NS-AQ		EMC		Y (2)	Y (5)	Y (6)
SAB Sump Level Sensor 3	30JNA10CL803	31UJH10004	M	H				SII	NS-AQ		EMC		Y (2)	Y (5)	Y (6)
SAB Sump Level Sensor 4	30JNA10CL804	31UJH10004	M	H				SII	NS-AQ		EMC		Y (2)	Y (5)	Y (6)
SAB Pressure Sensor 1	30JNA10CP801	31UJH10004	M	H				SII	NS-AQ		EMC		Y (2)	Y (5)	Y (6)
SAB Pressure Sensor 2	30JNA10CP802	31UJH10004	M	H				SII	NS-AQ		EMC		Y (2)	Y (5)	Y (6)
SAB Pressure Sensor 3	30JNA10CP803	31UJH10004	M	H				SII	NS-AQ		EMC		Y (2)	Y (5)	Y (6)
SAB Pressure Sensor 4	30JNA10CP804	31UJH10004	M	H				SII	NS-AQ		EMC		Y (2)	Y (5)	Y (6)
Hot Leg Pressure Sensor (WR)	30JNA10CP826	30UJA07014	H	H	RT	ES	PAM	SI	S	1E	EMC	Y (1)		Y (5)	
Hot Leg Pressure Sensor (NR)	30JNA10CP827	30UJA07014	H	H	RT	ES	PAM	SI	S	1E	EMC	Y (1)		Y (5)	
LHSI HX Byp. Control Valve Pos. Sensor	30JNA20CG101	32UJH05002	M	H		ES		SI	S	1E	EMC		Y (2)	Y (5)	Y (6)
RHR Suct. Line Safety Valve Pos. Sensor	30JNA20CG191B	30UJA11026	H	H		ES		SI	S	1E	EMC	Y (1)		Y (5)	
SAB Sump Level Sensor 1	30JNA20CL801	32UJH10002	M	H				SII	NS-AQ		EMC		Y (2)	Y (5)	Y (6)
SAB Sump Level Sensor 2	30JNA20CL802	32UJH10002	M	H				SII	NS-AQ		EMC		Y (2)	Y (5)	Y (6)
SAB Sump Level Sensor 3	30JNA20CL803	32UJH10002	M	H				SII	NS-AQ		EMC		Y (2)	Y (5)	Y (6)
SAB Sump Level Sensor 4	30JNA20CL804	32UJH10002	M	H				SII	NS-AQ		EMC		Y (2)	Y (5)	Y (6)
SAB Pressure Sensor 1	30JNA20CP801	32UJH10002	M	H				SII	NS-AQ		EMC		Y (2)	Y (5)	Y (6)
SAB Pressure Sensor 2	30JNA20CP802	32UJH10002	M	H				SII	NS-AQ		EMC		Y (2)	Y (5)	Y (6)
SAB Pressure Sensor 3	30JNA20CP803	32UJH10002	M	H				SII	NS-AQ		EMC		Y (2)	Y (5)	Y (6)
SAB Pressure Sensor 4	30JNA20CP804	32UJH10002	M	H				SII	NS-AQ		EMC		Y (2)	Y (5)	Y (6)
Hot Leg Pressure Sensor (WR)	30JNA20CP826	30UJA07014	H	H	RT	ES	PAM	SI	S	1E	EMC	Y (1)		Y (5)	
Hot Leg Pressure Sensor (NR)	30JNA20CP827	30UJA07014	H	H	RT	ES	PAM	SI	S	1E	EMC	Y (1)		Y (5)	
LHSI HX Byp. Control Valve Pos. Sensor	30JNA30CG101	33UJH05002	M	H		ES		SI	S	1E	EMC		Y (2)	Y (5)	Y (6)
HX Thr. Val. on Puri. to CVCS Pos. Ssr.	30JNA30CG103	33UJH05002	M	H		ES		SI	S	1E	EMC		Y (2)	Y (5)	Y (6)
RHR Suct. Line Safety Valve Pos. Sensor	30JNA30CG191B	30UJA11027	H	H		ES		SI	S	1E	EMC	Y (1)		Y (5)	
SAB Sump Level Sensor 1	30JNA30CL801	33UJH10002	M	H				SII	NS-AQ		EMC		Y (2)	Y (5)	Y (6)
SAB Sump Level Sensor 2	30JNA30CL802	33UJH10002	M	H				SII	NS-AQ		EMC		Y (2)	Y (5)	Y (6)
SAB Sump Level Sensor 3	30JNA30CL803	33UJH10002	M	H				SII	NS-AQ		EMC		Y (2)	Y (5)	Y (6)
SAB Sump Level Sensor 4	30JNA30CL804	33UJH10002	M	H				SII	NS-AQ		EMC		Y (2)	Y (5)	Y (6)
SAB Pressure Sensor 1	30JNA30CP801	33UJH10002	M	H				SII	NS-AQ		EMC		Y (2)	Y (5)	Y (6)
SAB Pressure Sensor 2	30JNA30CP802	33UJH10002	M	H				SII	NS-AQ		EMC		Y (2)	Y (5)	Y (6)
SAB Pressure Sensor 3	30JNA30CP803	33UJH10002	M	H				SII	NS-AQ		EMC		Y (2)	Y (5)	Y (6)

Table 3.11-1—List of Environmentally Qualified Electrical/I&C Equipment (Sheet 36 of 130)

Name Tag (Equipment Description)	Tag Number	Local Area KKS ID (Room Location)	EQ Environment (Note 1)	Radiation Environment Zone (Note 2)	EQ Designated Function (Note 3)				Safety Class (Note 4)			EQ Program Designation (Note 5)			
SAB Pressure Sensor 4	30JNA30CP804	33UJH10002	M	H				SII	NS-AQ		EMC		Y (2)	Y (5)	Y (6)
Hot Leg Pressure Sensor (WR)	30JNA30CP826	30UJA07015	H	H	RT	ES	PAM	SI	S	1E	EMC	Y (1)		Y (5)	
Hot Leg Pressure Sensor (NR)	30JNA30CP827	30UJA07015	H	H	RT	ES	PAM	SI	S	1E	EMC	Y (1)		Y (5)	
LHSI HX Byp. Control Valve Pos. Sensor	30JNA40CG101	34UJH05004	M	H		ES		SI	S	1E	EMC		Y (2)	Y (5)	Y (6)
HX Thr. Val. on Puri. to CVCS Pos. Ssr.	30JNA40CG103	34UJH05004	M	H		ES		SI	S	1E	EMC		Y (2)	Y (5)	Y (6)
RHR Suct. Line Safety Valve Pos. Sensor	30JNA40CG191B	30UJA11028	H	H		ES		SI	S	1E	EMC	Y (1)		Y (5)	
SAB Sump Level Sensor 1	30JNA40CL801	34UJH10004	M	H				SII	NS-AQ		EMC		Y (2)	Y (5)	Y (6)
SAB Sump Level Sensor 2	30JNA40CL802	34UJH10004	M	H				SII	NS-AQ		EMC		Y (2)	Y (5)	Y (6)
SAB Sump Level Sensor 3	30JNA40CL803	34UJH10004	M	H				SII	NS-AQ		EMC		Y (2)	Y (5)	Y (6)
SAB Sump Level Sensor 4	30JNA40CL804	34UJH10004	M	H				SII	NS-AQ		EMC		Y (2)	Y (5)	Y (6)
SAB Pressure Sensor 1	30JNA40CP801	34UJH10004	M	H				SII	NS-AQ		EMC		Y (2)	Y (5)	Y (6)
SAB Pressure Sensor 2	30JNA40CP802	34UJH10004	M	H				SII	NS-AQ		EMC		Y (2)	Y (5)	Y (6)
SAB Pressure Sensor 3	30JNA40CP803	34UJH10004	M	H				SII	NS-AQ		EMC		Y (2)	Y (5)	Y (6)
SAB Pressure Sensor 4	30JNA40CP804	34UJH10004	M	H				SII	NS-AQ		EMC		Y (2)	Y (5)	Y (6)
Hot Leg Pressure Sensor (WR)	30JNA40CP826	30UJA07016	H	H	RT	ES	PAM	SI	S	1E	EMC	Y (1)		Y (5)	
Hot Leg Pressure Sensor (NR)	30JNA40CP827	30UJA07016	H	H	RT	ES	PAM	SI	S	1E	EMC	Y (1)		Y (5)	
MHSI Flowrate Sensor (WR)	30JND10CF001A	31UJH01001	M	H		ES	PAM	SI	S	1E	EMC		Y (2)	Y (5)	Y (6)
MHSI Flowrate Sensor (NR)	30JND10CF001B	31UJH01001	M	H		ES		SI	S	1E	EMC		Y (2)	Y (5)	Y (6)
MHSI Control Flowrate Sensor (WR)	30JND10CF002A	30UJA11013	H	H		ES	PAM	SI	S	1E	EMC	Y (1)		Y (5)	
MHSI Control Flowrate Sensor (NR)	30JND10CF002B	30UJA11013	H	H		ES		SI	S	1E	EMC	Y (1)		Y (5)	
MHSI Control Valve Position Sensor	30JND10CG803	30UJA11013	H	H		ES		SI	S	1E	EMC	Y (1)		Y (5)	
MHSI Pump Downstream Press. Sensor	30JND10CP003	31UJH01001	M	H		ES		SI	S	1E	EMC		Y (2)	Y (5)	Y (6)
MHSI Flowrate Sensor (WR)	30JND20CF001A	32UJH01003	M	H		ES	PAM	SI	S	1E	EMC		Y (2)	Y (5)	Y (6)
MHSI Flowrate Sensor (NR)	30JND20CF001B	32UJH01003	M	H		ES		SI	S	1E	EMC		Y (2)	Y (5)	Y (6)
MHSI Control Flowrate Sensor (WR)	30JND20CF002A	30UJA11014	H	H		ES	PAM	SI	S	1E	EMC	Y (1)		Y (5)	
MHSI Control Flowrate Sensor (NR)	30JND20CF002B	30UJA11014	H	H		ES		SI	S	1E	EMC	Y (1)		Y (5)	
MHSI Control Valve Position Sensor	30JND20CG803	30UJA11014	H	H		ES		SI	S	1E	EMC	Y (1)		Y (5)	
MHSI Pump Downstream Press. Sensor	30JND20CP003	32UJH01003	M	H		ES		SI	S	1E	EMC		Y (2)	Y (5)	Y (6)
MHSI Flowrate Sensor (WR)	30JND30CF001A	33UJH01003	M	H		ES	PAM	SI	S	1E	EMC		Y (2)	Y (5)	Y (6)
MHSI Flowrate Sensor (NR)	30JND30CF001B	33UJH01003	M	H		ES		SI	S	1E	EMC		Y (2)	Y (5)	Y (6)
MHSI Control Flowrate Sensor (WR)	30JND30CF002A	30UJA11015	H	H		ES	PAM	SI	S	1E	EMC	Y (1)		Y (5)	
MHSI Control Flowrate Sensor (NR)	30JND30CF002B	30UJA11015	H	H		ES		SI	S	1E	EMC	Y (1)		Y (5)	
MHSI Control Valve Position Sensor	30JND30CG803	30UJA11015	H	H		ES		SI	S	1E	EMC	Y (1)		Y (5)	

Table 3.11-1—List of Environmentally Qualified Electrical/I&C Equipment (Sheet 37 of 130)

Name Tag (Equipment Description)	Tag Number	Local Area KKS ID (Room Location)	EQ Environment (Note 1)	Radiation Environment Zone (Note 2)	EQ Designated Function (Note 3)			Safety Class (Note 4)			EQ Program Designation (Note 5)			
MHSI Pump Downstream Press. Sensor	30JND30CP003	33UJH01003	M	H	ES		SI	S	1E	EMC		Y (2)	Y (5)	Y (6)
MHSI Flowrate Sensor (WR)	30JND40CF001A	34UJH01001	M	H	ES	PAM	SI	S	1E	EMC		Y (2)	Y (5)	Y (6)
MHSI Flowrate Sensor (NR)	30JND40CF001B	34UJH01001	M	H	ES		SI	S	1E	EMC		Y (2)	Y (5)	Y (6)
MHSI Control Flowrate Sensor (WR)	30JND40CF002A	30UJA11016	H	H	ES	PAM	SI	S	1E	EMC	Y (1)		Y (5)	
MHSI Control Flowrate Sensor (NR)	30JND40CF002B	30UJA11016	H	H	ES		SI	S	1E	EMC	Y (1)		Y (5)	
MHSI Control Valve Position Sensor	30JND40CG803	30UJA11016	H	H	ES		SI	S	1E	EMC	Y (1)		Y (5)	
MHSI Pump Downstream Press. Sensor	30JND40CP003	34UJH01001	M	H	ES		SI	S	1E	EMC		Y (2)	Y (5)	Y (6)
RHR Flowrate Sensor (WR)	30JNG10CF001A	31UJH01001	M	H	ES	PAM	SI	S	1E	EMC		Y (2)	Y (5)	Y (6)
RHR Flowrate Sensor (NR)	30JNG10CF001B	31UJH01001	M	H	ES		SI	S	1E	EMC		Y (2)	Y (5)	Y (6)
LHSI Control Flowrate Sensor (WR)	30JNG10CF002A	30UJA11013	H	H	ES	PAM	SI	S	1E	EMC	Y (1)		Y (5)	
LHSI Control Flowrate Sensor (NR)	30JNG10CF002B	30UJA11013	H	H	ES		SI	S	1E	EMC	Y (1)		Y (5)	
LHSI Disch. Line Safety Val. Pos. Sensor	30JNG10CG192B	30UJA11025	H	H	ES		SI	S	1E	EMC	Y (1)		Y (5)	
LHSI HX Main Control Valve Pos. Sensor	30JNG10CG802	31UJH05004	M	H	ES		SI	S	1E	EMC		Y (2)	Y (5)	Y (6)
LHSI Control Valve Position Sensor	30JNG10CG806	30UJA11013	H	H	ES		SI	S	1E	EMC	Y (1)		Y (5)	
LHSI Pump Downstream Press. Sensor	30JNG10CP003	31UJH05010	M	H	ES		SI	S	1E	EMC		Y (2)	Y (5)	Y (6)
LHSI Pump Downstream Temp. Sensor	30JNG10CT001	31UJH05004	M	H	ES		SI	S	1E	EMC		Y (2)	Y (5)	Y (6)
RHR Temperature Sensor	30JNG10CT002	31UJH01002	M	H	ES		SI	S	1E	EMC		Y (2)	Y (5)	Y (6)
Hot Leg Injection Flowrate Sensor	30JNG12CF001	31UJH01001	M	H	ES	PAM	SI	S	1E	EMC		Y (2)	Y (5)	Y (6)
Accumulator Level Sensor 1 (NR)	30JNG13CL001	30UJA18013	H	H	ES		SI	S	1E	EMC	Y (1)		Y (5)	
Accumulator Level Sensor 2 (NR)	30JNG13CL002	30UJA18013	H	H	ES		SI	S	1E	EMC	Y (1)		Y (5)	
Accumulator Level Sensor (WR)	30JNG13CL003	30UJA15013	H	H	ES		SI	S	1E	EMC	Y (1)		Y (5)	
Accumulator Pressure Sensor 1 (NR)	30JNG13CP001	30UJA23013	H	H	ES		SI	S	1E	EMC	Y (1)		Y (5)	
Accumulator Pressure Sensor 2 (NR)	30JNG13CP002	30UJA23013	H	H	ES		SI	S	1E	EMC	Y (1)		Y (5)	
Accumulator Pressure Sensor (WR)	30JNG13CP004	30UJA23013	H	H	ES		SI	S	1E	EMC	Y (1)		Y (5)	
RHR Flowrate Sensor (WR)	30JNG20CF001A	32UJH01003	M	H	ES	PAM	SI	S	1E	EMC		Y (2)	Y (5)	Y (6)
RHR Flowrate Sensor (NR)	30JNG20CF001B	32UJH01003	M	H	ES		SI	S	1E	EMC		Y (2)	Y (5)	Y (6)
LHSI Control Flowrate Sensor (WR)	30JNG20CF002A	30UJA11014	H	H	ES	PAM	SI	S	1E	EMC	Y (1)		Y (5)	
LHSI Control Flowrate Sensor (NR)	30JNG20CF002B	30UJA11014	H	H	ES		SI	S	1E	EMC	Y (1)		Y (5)	
LHSI Disch. Line Safety Val. Pos. Sensor	30JNG20CG192B	30UJA11026	H	H	ES		SI	S	1E	EMC	Y (1)		Y (5)	
LHSI HX Main Control Valve Pos. Sensor	30JNG20CG802	32UJH05002	M	H	ES		SI	S	1E	EMC		Y (2)	Y (5)	Y (6)
LHSI Control Valve Position Sensor	30JNG20CG806	30UJA11014	H	H	ES		SI	S	1E	EMC		Y (1)	Y (5)	
LHSI Pump Downstream Press. Sensor	30JNG20CP003	32UJH05005	M	H	ES		SI	S	1E	EMC		Y (2)	Y (5)	Y (6)
LHSI Pump Downstream Temp. Sensor	30JNG20CT001	32UJH05002	M	H	ES		SI	S	1E	EMC		Y (2)	Y (5)	Y (6)

Table 3.11-1—List of Environmentally Qualified Electrical/I&C Equipment (Sheet 38 of 130)

Name Tag (Equipment Description)	Tag Number	Local Area KKS ID (Room Location)	EQ Environment (Note 1)	Radiation Environment Zone (Note 2)	EQ Designated Function (Note 3)			Safety Class (Note 4)			EQ Program Designation (Note 5)			
RHR Temperature Sensor	30JNG20CT002	32UJH01007	M	H	ES		SI	S	1E	EMC		Y (2)	Y (5)	Y (6)
Hot Leg Injection Flowrate Sensor	30JNG22CF001	32UJH05010	M	H	ES	PAM	SI	S	1E	EMC		Y (2)	Y (5)	Y (6)
Accumulator Level Sensor 1 (NR)	30JNG23CL001	30UJA18014	H	H	ES		SI	S	1E	EMC	Y (1)		Y (5)	
Accumulator Level Sensor 2 (NR)	30JNG23CL002	30UJA18014	H	H	ES		SI	S	1E	EMC	Y (1)		Y (5)	
Accumulator Level Sensor (WR)	30JNG23CL003	30UJA15014	H	H	ES		SI	S	1E	EMC	Y (1)		Y (5)	
Accumulator Pressure Sensor 1 (NR)	30JNG23CP001	30UJA23014	H	H	ES		SI	S	1E	EMC	Y (1)		Y (5)	
Accumulator Pressure Sensor 2 (NR)	30JNG23CP002	30UJA23014	H	H	ES		SI	S	1E	EMC	Y (1)		Y (5)	
Accumulator Pressure Sensor (WR)	30JNG23CP004	30UJA23014	H	H	ES		SI	S	1E	EMC	Y (1)		Y (5)	
RHR Flowrate Sensor (WR)	30JNG30CF001A	33UJH01003	M	H	ES	PAM	SI	S	1E	EMC		Y (2)	Y (5)	Y (6)
RHR Flowrate Sensor (NR)	30JNG30CF001B	33UJH01003	M	H	ES		SI	S	1E	EMC		Y (2)	Y (5)	Y (6)
LHSI Control Flowrate Sensor (WR)	30JNG30CF002A	30UJA11015	H	H	ES	PAM	SI	S	1E	EMC	Y (1)		Y (5)	
LHSI Control Flowrate Sensor (NR)	30JNG30CF002B	30UJA11015	H	H	ES		SI	S	1E	EMC	Y (1)		Y (5)	
LHSI Disch. Line Safety Val. Pos. Sensor	30JNG30CG192B	30UJA11027	H	H	ES		SI	S	1E	EMC	Y (1)		Y (5)	
LHSI HX Main Control Valve Pos. Sensor	30JNG30CG802	33UJH05002	M	H	ES		SI	S	1E	EMC		Y (2)	Y (5)	Y (6)
LHSI Control Valve Position Sensor	30JNG30CG806	30UJA11015	H	H	ES		SI	S	1E	EMC	Y (1)		Y (5)	
LHSI Pump Downstream Press. Sensor	30JNG30CP003	33UJH05005	M	H	ES		SI	S	1E	EMC		Y (2)	Y (5)	Y (6)
LHSI Pump Downstream Temp. Sensor	30JNG30CT001	33UJH05002	M	H	ES		SI	S	1E	EMC		Y (2)	Y (5)	Y (6)
RHR Temperature Sensor	30JNG30CT002	33UJH01007	M	H	ES		SI	S	1E	EMC		Y (2)	Y (5)	Y (6)
Hot Leg Injection Flowrate Sensor	30JNG32CF001	33UJH05010	M	H	ES	PAM	SI	S	1E	EMC		Y (2)	Y (5)	Y (6)
Accumulator Level Sensor 1 (NR)	30JNG33CL001	30UJA18015	H	H	ES		SI	S	1E	EMC	Y (1)		Y (5)	
Accumulator Level Sensor 2 (NR)	30JNG33CL002	30UJA18015	H	H	ES		SI	S	1E	EMC	Y (1)		Y (5)	
Accumulator Level Sensor (WR)	30JNG33CL003	30UJA15015	H	H	ES		SI	S	1E	EMC	Y (1)		Y (5)	
Accumulator Pressure Sensor 1 (NR)	30JNG33CP001	30UJA23015	H	H	ES		SI	S	1E	EMC	Y (1)		Y (5)	
Accumulator Pressure Sensor 2 (NR)	30JNG33CP002	30UJA23015	H	H	ES		SI	S	1E	EMC	Y (1)		Y (5)	
Accumulator Pressure Sensor (WR)	30JNG33CP004	30UJA23015	H	H	ES		SI	S	1E	EMC	Y (1)		Y (5)	
RHR Flowrate Sensor (WR)	30JNG40CF001A	34UJH01001	M	H	ES	PAM	SI	S	1E	EMC		Y (2)	Y (5)	Y (6)
RHR Flowrate Sensor (NR)	30JNG40CF001B	34UJH01001	M	H	ES		SI	S	1E	EMC		Y (2)	Y (5)	Y (6)
LHSI Control Flowrate Sensor (WR)	30JNG40CF002A	30UJA11016	H	H	ES	PAM	SI	S	1E	EMC	Y (1)		Y (5)	
LHSI Control Flowrate Sensor (NR)	30JNG40CF002B	30UJA11016	H	H	ES		SI	S	1E	EMC	Y (1)		Y (5)	
LHSI Disch. Line Safety Val. Pos. Sensor	30JNG40CG192B	30UJA11028	H	H	ES		SI	S	1E	EMC	Y (1)		Y (5)	
LHSI HX Main Control Valve Pos. Sensor	30JNG40CG802	34UJH05004	M	H	ES		SI	S	1E	EMC		Y (2)	Y (5)	Y (6)
LHSI Control Valve Position Sensor	30JNG40CG806	30UJA11016	H	H	ES		SI	S	1E	EMC	Y (1)		Y (5)	
LHSI Pump Downstream Press. Sensor	30JNG40CP003	34UJH05006	M	H	ES		SI	S	1E	EMC		Y (2)	Y (5)	Y (6)

Table 3.11-1—List of Environmentally Qualified Electrical/I&C Equipment (Sheet 39 of 130)

Name Tag (Equipment Description)	Tag Number	Local Area KKS ID (Room Location)	EQ Environment (Note 1)	Radiation Environment Zone (Note 2)	EQ Designated Function (Note 3)			Safety Class (Note 4)				EQ Program Designation (Note 5)		
LHSI Pump Downstream Temp. Sensor	30JNG40CT001	34UJH05004	M	H	ES		SI	S	1E	EMC		Y (2)	Y (5)	Y (6)
RHR Temperature Sensor	30JNG40CT002	34UJH01002	M	H	ES		SI	S	1E	EMC		Y (2)	Y (5)	Y (6)
Hot Leg Injection Flowrate Sensor	30JNG42CF001	34UJH01001	M	H	ES	PAM	SI	S	1E	EMC		Y (2)	Y (5)	Y (6)
Accumulator Level Sensor 1 (NR)	30JNG43CL001	30UJA18016	H	H	ES		SI	S	1E	EMC		Y (1)	Y (5)	
Accumulator Level Sensor 2 (NR)	30JNG43CL002	30UJA18016	H	H	ES		SI	S	1E	EMC		Y (1)	Y (5)	
Accumulator Level Sensor (WR)	30JNG43CL003	30UJA15016	H	H	ES		SI	S	1E	EMC		Y (1)	Y (5)	
Accumulator Pressure Sensor 1 (NR)	30JNG43CP001	30UJA23016	H	H	ES		SI	S	1E	EMC		Y (1)	Y (5)	
Accumulator Pressure Sensor 2 (NR)	30JNG43CP002	30UJA23016	H	H	ES		SI	S	1E	EMC		Y (1)	Y (5)	
Accumulator Pressure Sensor (WR)	30JNG43CP004	30UJA23016	H	H	ES		SI	S	1E	EMC		Y (1)	Y (5)	
Component Cooling Water System (CCWS)														
Motor Fdr Cur L2	30KAA10CE102	31UJK18026	M	M			SII	NS-AQ		EMC			Y (5)	Y (6)
F Trn10 HX Out Meas	30KAA10CF053	31UJH10026	M	H	ES		SI	S	1E	EMC		Y (2)	Y (5)	Y (6)
Ctr-V DW Trn10	30KAA10CF057	31UJH01024	M	H			SI	S	1E	EMC		Y (2)	Y (5)	Y (6)
F Trn10 HX Out Test Meas	30KAA10CF255	31UJH10026	M	H			SI	S	1E	EMC		Y (2)	Y (5)	Y (6)
F Retn SUR TK10 Meas	30KAA10CF570	31UJH01026	M	H			SI	S	1E	EMC		Y (2)	Y (5)	Y (6)
G Opng *10AA006*	30KAA10CG006A	31UJH10004	M	H	ES		SI	S	1E	EMC		Y (2)	Y (5)	Y (6)
G Cls *10AA006*	30KAA10CG006B	31UJH10004	M	H	ES		SI	S	1E	EMC		Y (2)	Y (5)	Y (6)
G Opng *10AA010*	30KAA10CG010A	31UJH10004	M	H	ES		SI	S	1E	EMC		Y (2)	Y (5)	Y (6)
G Cls *10AA010*	30KAA10CG010B	31UJH10004	M	H	ES		SI	S	1E	EMC		Y (2)	Y (5)	Y (6)
G Opng *10AA027*	30KAA10CG027A	31UJH01024	M	H	ES		SI	S	1E	EMC		Y (2)	Y (5)	Y (6)
G Cls *10AA027*	30KAA10CG027B	31UJH01024	M	H	ES		SI	S	1E	EMC		Y (2)	Y (5)	Y (6)
G Opng *10AA032*	30KAA10CG032A	31UJH10004	M	H	ES		SI	S	1E	EMC		Y (2)	Y (5)	Y (6)
G Cls *10AA032*	30KAA10CG032B	31UJH10004	M	H	ES		SI	S	1E	EMC		Y (2)	Y (5)	Y (6)
G Opng *10AA033*	30KAA10CG033A	31UJH10004	M	H	ES		SI	S	1E	EMC		Y (2)	Y (5)	Y (6)
G Cls *10AA033*	30KAA10CG033B	31UJH10004	M	H	ES		SI	S	1E	EMC		Y (2)	Y (5)	Y (6)
G Meas *10AA112*	30KAA10CG112	31UJH10026	M	H	ES		SI	S	1E	EMC		Y (2)	Y (5)	Y (6)
Tr 1 SUR Tk Lvl 1	30KAA10CL094	31UJK31026	M	M	ES		SI	S	1E	EMC			Y (5)	Y (6)
Tr 1 SUR Tk Lvl 2	30KAA10CL099	31UJK31027	M	M	ES		SI	S	1E	EMC			Y (5)	Y (6)
L Oil PP1 Drv-E Brg	30KAA10CL520	31UJH01026	M	H			SII	NS-AQ		EMC		Y (2)	Y (5)	Y (6)
L OIL PP1 Brg	30KAA10CL521	31UJH01026	M	H			SII	NS-AQ		EMC		Y (2)	Y (5)	Y (6)
L SUR Tk10 Meas	30KAA10CL598	31UJK31027	M	M			SI	S	1E	EMC			Y (5)	Y (6)
DP HX10 Meas	30KAA10CP051	31UJH05026	M	H			SI	S	1E	EMC		Y (2)	Y (5)	Y (6)
P Dnstr PP10	30KAA10CP083	31UJH01026	M	H	ES		SI	S	1E	EMC		Y (2)	Y (5)	Y (6)

Table 3.11-1—List of Environmentally Qualified Electrical/I&C Equipment (Sheet 40 of 130)

Name Tag (Equipment Description)	Tag Number	Local Area KKS ID (Room Location)	EQ Environment (Note 1)	Radiation Environment Zone (Note 2)	EQ Designated Function (Note 3)	Safety Class (Note 4)				EQ Program Designation (Note 5)		
DP Suct Stm10	30KAA10CP274	31UJH01026	M	H	SI	S	1E	EMC		Y (2)	Y (5)	Y (6)
P Dnstr HX10	30KAA10CP297	31UJH10026	M	H	SI	S	1E	EMC		Y (2)	Y (5)	Y (6)
P Upstr PP10	30KAA10CP578	31UJH01026	M	H	SI	S	1E	EMC		Y (2)	Y (5)	Y (6)
P TEst Dnstr PP10	30KAA10CP579	31UJH01026	M	H	SI	S	1E	EMC		Y (2)	Y (5)	Y (6)
T CW Users Trn10	30KAA10CP587	31UJH10026	M	H	SI	S	1E	EMC		Y (2)	Y (5)	Y (6)
P M Cl PP10	30KAA10CP591	31UJH01026	M	H	SI	S	1E	EMC		Y (2)	Y (5)	Y (6)
Safe C Cool Syst 1	30KAA10CR001	31UJH05026	M	H	SI	S	1E	EMC		Y (2)	Y (5)	Y (6)
T PP1 N-Drv-E1 Brg A	30KAA10CT001A	31UJH01026	M	H	SII	NS-AQ		EMC		Y (2)	Y (5)	Y (6)
T PP1 N-Drv-E1 Brg B	30KAA10CT001B	31UJH01026	M	H	SII	NS-AQ		EMC		Y (2)	Y (5)	Y (6)
T PP1 Drv-E Brg A	30KAA10CT002A	31UJH01026	M	H	SII	NS-AQ		EMC		Y (2)	Y (5)	Y (6)
T PP1 Drv-E Brg B	30KAA10CT002B	31UJH01026	M	H	SII	NS-AQ		EMC		Y (2)	Y (5)	Y (6)
T PP1 N-Drv-E2 Brg A	30KAA10CT003A	31UJH01026	M	H	SII	NS-AQ		EMC		Y (2)	Y (5)	Y (6)
T PP1 N-Drv-E2 BRG B	30KAA10CT003B	31UJH01026	M	H	SII	NS-AQ		EMC		Y (2)	Y (5)	Y (6)
T M1 Wndg1	30KAA10CT005	31UJH01026	M	H	SII	NS-AQ		EMC		Y (2)	Y (5)	Y (6)
T M1 Wndg2	30KAA10CT006	31UJH01026	M	H	SII	NS-AQ		EMC		Y (2)	Y (5)	Y (6)
T M1 Wndg3	30KAA10CT007	31UJH01026	M	H	SII	NS-AQ		EMC		Y (2)	Y (5)	Y (6)
T M1Air W Cl Inl A	30KAA10CT011	31UJH01026	M	H	SII	NS-AQ		EMC		Y (2)	Y (5)	Y (6)
T M1Air W Cl Outl A	30KAA10CT012	31UJH01026	M	H	SII	NS-AQ		EMC		Y (2)	Y (5)	Y (6)
T M1 PP-E Brg A	30KAA10CT015A	31UJH01026	M	H	SII	NS-AQ		EMC		Y (2)	Y (5)	Y (6)
T M1 PP-E Brg B	30KAA10CT015B	31UJH01026	M	H	SII	NS-AQ		EMC		Y (2)	Y (5)	Y (6)
T M1 N-PP-E Brg A	30KAA10CT016A	31UJH01026	M	H	SII	NS-AQ		EMC		Y (2)	Y (5)	Y (6)
T M1 N-PP-E Brg B	30KAA10CT016B	31UJH01026	M	H	SII	NS-AQ		EMC		Y (2)	Y (5)	Y (6)
T Outl HX10 Meas	30KAA10CT090	31UJH10026	M	H	SI	S	1E	EMC		Y (2)	Y (5)	Y (6)
T Inl HX10 Meas	30KAA10CT092	31UJH01026	M	H	SI	S	1E	EMC		Y (2)	Y (5)	Y (6)
T Retn CCWS PP Cl1	30KAA10CT288	31UJH01026	M	H	SI	S	1E	EMC		Y (2)	Y (5)	Y (6)
T1 CW Users Trn10	30KAA10CT893	31UJH10026	M	H	ES SI	S	1E	EMC		Y (2)	Y (5)	Y (6)
T2 CW Users Trn10	30KAA10CT894	31UJH10026	M	H	ES SI	S	1E	EMC		Y (2)	Y (5)	Y (6)
T3 CW Users Trn10	30KAA10CT895	31UJH10026	M	H	ES SI	S	1E	EMC		Y (2)	Y (5)	Y (6)
F LHSI HX1 Meas	30KAA12CF062	31UJH05025	M	H	ES SI	S	1E	EMC		Y (2)	Y (5)	Y (6)
F MHSI PP1	30KAA12CF066	31UJH01001	M	H	ES SI	S	1E	EMC		Y (2)	Y (5)	Y (6)
F Test MHSI PP1	30KAA12CF264	31UJH01002	M	H	SI	S	1E	EMC		Y (2)	Y (5)	Y (6)
G Opng *12AA005*	30KAA12CG005A	31UJH10004	M	H	ES SI	S	1E	EMC		Y (2)	Y (5)	Y (6)
G CLS *12AA005*	30KAA12CG005B	31UJH10004	M	H	ES SI	S	1E	EMC		Y (2)	Y (5)	Y (6)

Table 3.11-1—List of Environmentally Qualified Electrical/I&C Equipment (Sheet 41 of 130)

Name Tag (Equipment Description)	Tag Number	Local Area KKS ID (Room Location)	EQ Environment (Note 1)	Radiation Environment Zone (Note 2)	EQ Designated Function (Note 3)	Safety Class (Note 4)				EQ Program Designation (Note 5)		
T Dnstr MHSI PP1	30KAA12CT258	31UJH01001	M	H	SI	S	1E	EMC		Y (2)	Y (5)	Y (6)
T Dnstr LHSI HX1	30KAA12CT555	31UJH05005	M	H	SI	S	1E	EMC		Y (2)	Y (5)	Y (6)
Motor Fdr Cur L2	30KAA20CE102	32UJK18020	M	M	SII	NS-AQ		EMC			Y (5)	Y (6)
F Trn20 HX Out Meas	30KAA20CF053	32UJH05006	M	H	ES SI	S	1E	EMC		Y (2)	Y (5)	Y (6)
CTR-V Dw Trn20	30KAA20CF057	32UJH01020	M	H	SI	S	1E	EMC		Y (2)	Y (5)	Y (6)
F Retn CCWS PP Cl2	30KAA20CF240	32UJH01020	M	H	ES SI	S	1E	EMC		Y (2)	Y (5)	Y (6)
F Trn20 HX Out Test Meas	30KAA20CF255	32UJH05006	M	H	SI	S	1E	EMC		Y (2)	Y (5)	Y (6)
F Retn SUR Tk20 Meas	30KAA20CF570	32UJH01020	M	H	SI	S	1E	EMC		Y (2)	Y (5)	Y (6)
G Opng *20AA006*	30KAA20CG006A	32UJH10002	M	H	ES SI	S	1E	EMC		Y (2)	Y (5)	Y (6)
G Cls *20AA006*	30KAA20CG006B	32UJH10002	M	H	ES SI	S	1E	EMC		Y (2)	Y (5)	Y (6)
G Opng *20AA010*	30KAA20CG010A	32UJH10002	M	H	ES SI	S	1E	EMC		Y (2)	Y (5)	Y (6)
G Cls *20AA010*	30KAA20CG010B	32UJH10002	M	H	ES SI	S	1E	EMC		Y (2)	Y (5)	Y (6)
G Cls *20AA013*	30KAA20CG013B	32UJH10002	M	H	ES SI	S	1E	EMC		Y (2)	Y (5)	Y (6)
G Cls *20AA014*	30KAA20CG014B	32UJH10002	M	H	ES SI	S	1E	EMC		Y (2)	Y (5)	Y (6)
G Opng *20AA027*	30KAA20CG027A	32UJH01020	M	H	ES SI	S	1E	EMC		Y (2)	Y (5)	Y (6)
G Cls *20AA027*	30KAA20CG027B	32UJH01020	M	H	ES SI	S	1E	EMC		Y (2)	Y (5)	Y (6)
G Opng *20AA032*	30KAA20CG032A	32UJH10002	M	H	ES SI	S	1E	EMC		Y (2)	Y (5)	Y (6)
G Cls *20AA032*	30KAA20CG032B	32UJH10002	M	H	ES SI	S	1E	EMC		Y (2)	Y (5)	Y (6)
G Opng *20AA033*	30KAA20CG033A	32UJH10002	M	H	ES SI	S	1E	EMC		Y (2)	Y (5)	Y (6)
G Cls *20AA033*	30KAA20CG033B	32UJH10002	M	H	ES SI	S	1E	EMC		Y (2)	Y (5)	Y (6)
G Meas *20AA112*	30KAA20CG112	32UJH10020	M	H	ES SI	S	1E	EMC		Y (2)	Y (5)	Y (6)
Tr 2 SUR Tk Lvl 1	30KAA20CL094	32UJK31036	M	M	ES SI	S	1E	EMC			Y (5)	Y (6)
Tr 2 SUR Tk Lvl 2	30KAA20CL099	32UJK31037	M	M	ES SI	S	1E	EMC			Y (5)	Y (6)
L Oil PP2 Drv-E Brg	30KAA20CL520	32UJH01020	M	H	SII	NS-AQ		EMC		Y (2)	Y (5)	Y (6)
L Oil PP2 Brg	30KAA20CL521	32UJH01020	M	H	SII	NS-AQ		EMC		Y (2)	Y (5)	Y (6)
L SUR TK20 Meas	30KAA20CL598	32UJK31037	M	M	SI	S	1E	EMC			Y (5)	Y (6)
DP HX20 Meas	30KAA20CP051	32UJH05020	M	H	SI	S	1E	EMC		Y (2)	Y (5)	Y (6)
P Dnstr PP20	30KAA20CP083	32UJH01020	M	H	ES SI	S	1E	EMC		Y (2)	Y (5)	Y (6)
DP Suct Strn20	30KAA20CP274	32UJH01020	M	H	SI	S	1E	EMC		Y (2)	Y (5)	Y (6)
P Dnstr HX20	30KAA20CP297	32UJH10020	M	H	SI	S	1E	EMC		Y (2)	Y (5)	Y (6)
P Upstr PP20	30KAA20CP578	32UJH01020	M	H	SI	S	1E	EMC		Y (2)	Y (5)	Y (6)
P Test Dnstr PP20	30KAA20CP579	32UJH01020	M	H	SI	S	1E	EMC		Y (2)	Y (5)	Y (6)
T CW Users Trn20	30KAA20CP587	32UJH10020	M	H	SI	S	1E	EMC		Y (2)	Y (5)	Y (6)

Table 3.11-1—List of Environmentally Qualified Electrical/I&C Equipment (Sheet 42 of 130)

Name Tag (Equipment Description)	Tag Number	Local Area KKS ID (Room Location)	EQ Environment (Note 1)	Radiation Environment Zone (Note 2)	EQ Designated Function (Note 3)	Safety Class (Note 4)				EQ Program Designation (Note 5)		
P M CL PP20	30KAA20CP591	32UJH01020	M	H	SI	S	1E	EMC		Y (2)	Y (5)	Y (6)
Safe C Cool Syst 2	30KAA20CR001	32UJH05020	M	H	SI	S	1E	EMC		Y (2)	Y (5)	Y (6)
T PP2 N-Drv-E1 Brg A	30KAA20CT001A	32UJH01020	M	H	SII	NS-AQ		EMC		Y (2)	Y (5)	Y (6)
T PP2 N-Drv-E1 Brg B	30KAA20CT001B	32UJH01020	M	H	SII	NS-AQ		EMC		Y (2)	Y (5)	Y (6)
T PP2 Drv-E Brg A	30KAA20CT002A	32UJH01020	M	H	SII	NS-AQ		EMC		Y (2)	Y (5)	Y (6)
T PP2 Drv-E Brg B	30KAA20CT002B	32UJH01020	M	H	SII	NS-AQ		EMC		Y (2)	Y (5)	Y (6)
T PP2 N-Drv-E2 Brg A	30KAA20CT003A	32UJH01020	M	H	SII	NS-AQ		EMC		Y (2)	Y (5)	Y (6)
T PP2 N-Drv-E2 Brg B	30KAA20CT003B	32UJH01020	M	H	SII	NS-AQ		EMC		Y (2)	Y (5)	Y (6)
T M2 Wndg1	30KAA20CT005	32UJH01020	M	H	SII	NS-AQ		EMC		Y (2)	Y (5)	Y (6)
T M2 Wndg2	30KAA20CT006	32UJH01020	M	H	SII	NS-AQ		EMC		Y (2)	Y (5)	Y (6)
T M2 Wndg3	30KAA20CT007	32UJH01020	M	H	SII	NS-AQ		EMC		Y (2)	Y (5)	Y (6)
T M2 Air W Cl Inl A	30KAA20CT011	32UJH01020	M	H	SII	NS-AQ		EMC		Y (2)	Y (5)	Y (6)
T M2 Air W Cl Outl A	30KAA20CT012	32UJH01020	M	H	SII	NS-AQ		EMC		Y (2)	Y (5)	Y (6)
T M2 PP-E Brg A	30KAA20CT015A	32UJH01020	M	H	SII	NS-AQ		EMC		Y (2)	Y (5)	Y (6)
T M2 PP-E Brg B	30KAA20CT015B	32UJH01020	M	H	SII	NS-AQ		EMC		Y (2)	Y (5)	Y (6)
T M2 N-PP-E Brg A	30KAA20CT016A	32UJH01020	M	H	SII	NS-AQ		EMC		Y (2)	Y (5)	Y (6)
T M2 N-PP-E Brg B	30KAA20CT016B	32UJH01020	M	H	SII	NS-AQ		EMC		Y (2)	Y (5)	Y (6)
T Outl HX20 Meas	30KAA20CT090	32UJH10020	M	H	SI	S	1E	EMC		Y (2)	Y (5)	Y (6)
T Inl HX20 Meas	30KAA20CT092	32UJH01020	M	H	SI	S	1E	EMC		Y (2)	Y (5)	Y (6)
T Retn CCWS PP Cl2	30KAA20CT288	32UJH01020	M	H	SI	S	1E	EMC		Y (2)	Y (5)	Y (6)
T1 CW Users Tm20	30KAA20CT893	32UJH10020	M	H	ES SI	S	1E	EMC		Y (2)	Y (5)	Y (6)
T2 CW Users Tm20	30KAA20CT894	32UJH10020	M	H	ES SI	S	1E	EMC		Y (2)	Y (5)	Y (6)
T3 CW Users Tm20	30KAA20CT895	32UJH10020	M	H	ES SI	S	1E	EMC		Y (2)	Y (5)	Y (6)
F LHSI HX2 Meas	30KAA22CF062	32UJH05020	M	H	ES SI	S	1E	EMC		Y (2)	Y (5)	Y (6)
F MHSI PP2	30KAA22CF066	32UJH01005	M	H	ES SI	S	1E	EMC		Y (2)	Y (5)	Y (6)
F Safe Chil2	30KAA22CF068	32UJH05020	M	H	ES SI	S	1E	EMC		Y (2)	Y (5)	Y (6)
F LHSI PP2	30KAA22CF080	32UJH01005	M	H	ES SI	S	1E	EMC		Y (2)	Y (5)	Y (6)
F Test MHSI PP2	30KAA22CF264	32UJH01005	M	H	SI	S	1E	EMC		Y (2)	Y (5)	Y (6)
F LHSI Test PP2	30KAA22CF282	32UJH01005	M	H	SI	S	1E	EMC		Y (2)	Y (5)	Y (6)
G Opng *22AA005*	30KAA22CG005A	32UJH10002	M	H	ES SI	S	1E	EMC		Y (2)	Y (5)	Y (6)
G Cls *22AA005*	30KAA22CG005B	32UJH10002	M	H	ES SI	S	1E	EMC		Y (2)	Y (5)	Y (6)
G Meas *22AA101*	30KAA22CG101	32UJH05020	M	H	ES SI	S	1E	EMC		Y (2)	Y (5)	Y (6)
P Dnstr Safe Chil2	30KAA22CP501	32UJH05020	M	H	SI	S	1E	EMC		Y (2)	Y (5)	Y (6)

Table 3.11-1—List of Environmentally Qualified Electrical/I&C Equipment (Sheet 43 of 130)

Name Tag (Equipment Description)	Tag Number	Local Area KKS ID (Room Location)	EQ Environment (Note 1)	Radiation Environment Zone (Note 2)	EQ Designated Function (Note 3)	Safety Class (Note 4)				EQ Program Designation (Note 5)		
P Dnstr *22 AA101*	30KAA22CP502	32UJH05020	M	H		SI	S	1E	EMC		Y (2)	Y (5) Y (6)
P Upstr Safe Chil2	30KAA22CP503	32UJH05020	M	H		SI	S	1E	EMC		Y (2)	Y (5) Y (6)
T Dnstr MHSI PP2	30KAA22CT258	32UJH01005	M	H		SI	S	1E	EMC		Y (2)	Y (5) Y (6)
T Dnstr LHSI PP2	30KAA22CT284	32UJH01005	M	H		SI	S	1E	EMC		Y (2)	Y (5) Y (6)
T Dnstr Safe Chil2	30KAA22CT553	32UJH05020	M	H		SI	S	1E	EMC		Y (2)	Y (5) Y (6)
T Dnstr LHSI HX2	30KAA22CT555	32UJH05006	M	H		SI	S	1E	EMC		Y (2)	Y (5) Y (6)
Motor Fdr Cur L2	30KAA30CE102	33UJK18020	M	M		SII	NS-AQ		EMC			Y (5) Y (6)
F Trn30 HX Out Meas	30KAA30CF053	33UJH05006	M	H	ES	SI	S	1E	EMC		Y (2)	Y (5) Y (6)
Ctr-V DW Trn30	30KAA30CF057	33UJH01020	M	H		SI	S	1E	EMC		Y (2)	Y (5) Y (6)
F Retn CCWS PP Cl3	30KAA30CF240	33UJH01020	M	H	ES	SI	S	1E	EMC		Y (2)	Y (5) Y (6)
F Trn30 HX Out Test Meas	30KAA30CF255	33UJH05006	M	H		SI	S	1E	EMC		Y (2)	Y (5) Y (6)
F Retn Sur Tk30 Meas	30KAA30CF570	33UJH01020	M	H		SI	S	1E	EMC		Y (2)	Y (5) Y (6)
G Opng *30AA006*	30KAA30CG006A	33UJH10002	M	H	ES	SI	S	1E	EMC		Y (2)	Y (5) Y (6)
G Cls *30AA006*	30KAA30CG006B	33UJH10002	M	H	ES	SI	S	1E	EMC		Y (2)	Y (5) Y (6)
G Opng *30AA010*	30KAA30CG010A	33UJH10002	M	H	ES	SI	S	1E	EMC		Y (2)	Y (5) Y (6)
G Cls *30AA010*	30KAA30CG010B	33UJH10002	M	H	ES	SI	S	1E	EMC		Y (2)	Y (5) Y (6)
G Cls *30AA013*	30KAA30CG013B	33UJH10002	M	H	ES	SI	S	1E	EMC		Y (2)	Y (5) Y (6)
G Cls *30AA014*	30KAA30CG014B	33UJH10002	M	H	ES	SI	S	1E	EMC		Y (2)	Y (5) Y (6)
G Opng *30AA027*	30KAA30CG027A	33UJH01020	M	H	ES	SI	S	1E	EMC		Y (2)	Y (5) Y (6)
G Cls *30AA027*	30KAA30CG027B	33UJH01020	M	H	ES	SI	S	1E	EMC		Y (2)	Y (5) Y (6)
G Opng *30AA032*	30KAA30CG032A	33UJH10002	M	H	ES	SI	S	1E	EMC		Y (2)	Y (5) Y (6)
G Cls *30AA032*	30KAA30CG032B	33UJH10002	M	H	ES	SI	S	1E	EMC		Y (2)	Y (5) Y (6)
G Opng *30AA033*	30KAA30CG033A	33UJH10002	M	H	ES	SI	S	1E	EMC		Y (2)	Y (5) Y (6)
G CLS *30aa033*	30KAA30CG033B	33UJH10002	M	H	ES	SI	S	1E	EMC		Y (2)	Y (5) Y (6)
G Meas *30AA112*	30KAA30CG112	33UJH10020	M	H	ES	SI	S	1E	EMC		Y (2)	Y (5) Y (6)
Tr 3 SUR Tk Lvl 1	30KAA30CL094	33UJK31036	M	M	ES	SI	S	1E	EMC			Y (5) Y (6)
Tr 3 SUR Tk Lvl 2	30KAA30CL099	33UJK31037	M	M	ES	SI	S	1E	EMC			Y (5) Y (6)
L Oil PP3 Drv-E Brg	30KAA30CL520	33UJH01020	M	H		SII	NS-AQ		EMC		Y (2)	Y (5) Y (6)
L Oil PP3 Brg	30KAA30CL521	33UJH01020	M	H		SII	NS-AQ		EMC		Y (2)	Y (5) Y (6)
L SUR Tk30 Meas	30KAA30CL598	33UJK31037	M	M		SI	S	1E	EMC			Y (5) Y (6)
DP HX30 Meas	30KAA30CP051	33UJH05020	M	H		SI	S	1E	EMC		Y (2)	Y (5) Y (6)
P dnstr PP30	30KAA30CP083	33UJH01020	M	H	ES	SI	S	1E	EMC		Y (2)	Y (5) Y (6)
DP Suct Strn30	30KAA30CP274	33UJH10020	M	H		SI	S	1E	EMC		Y (2)	Y (5) Y (6)

Table 3.11-1—List of Environmentally Qualified Electrical/I&C Equipment (Sheet 44 of 130)

Name Tag (Equipment Description)	Tag Number	Local Area KKS ID (Room Location)	EQ Environment (Note 1)	Radiation Environment Zone (Note 2)	EQ Designated Function (Note 3)	Safety Class (Note 4)				EQ Program Designation (Note 5)		
P Dnstr HX30	30KAA30CP297	33UJH10020	M	H	SI	S	1E	EMC		Y (2)	Y (5)	Y (6)
P Upstr PP30	30KAA30CP578	33UJH01020	M	H	SI	S	1E	EMC		Y (2)	Y (5)	Y (6)
P Test Dnstr PP30	30KAA30CP579	33UJH01020	M	H	SI	S	1E	EMC		Y (2)	Y (5)	Y (6)
T CW Users Trn30	30KAA30CP587	33UJH10020	M	H	SI	S	1E	EMC		Y (2)	Y (5)	Y (6)
P M CL PP30	30KAA30CP591	33UJH01020	M	H	SI	S	1E	EMC		Y (2)	Y (5)	Y (6)
Safe C Cool Syst 3	30KAA30CR001	33UJH05020	M	H	SI	S	1E	EMC		Y (2)	Y (5)	Y (6)
T PP3 N-Drv-E1 Brg A	30KAA30CT001A	33UJH01020	M	H	SII	NS-AQ		EMC		Y (2)	Y (5)	Y (6)
T PP3 N-Drv-E1 Brg B	30KAA30CT001B	33UJH01020	M	H	SII	NS-AQ		EMC		Y (2)	Y (5)	Y (6)
T PP3 Drv-E Brg A	30KAA30CT002A	33UJH01020	M	H	SII	NS-AQ		EMC		Y (2)	Y (5)	Y (6)
T PP3 Drv-E Brg B	30KAA30CT002B	33UJH01020	M	H	SII	NS-AQ		EMC		Y (2)	Y (5)	Y (6)
T PP3 N-Drv-E2 Brg A	30KAA30CT003A	33UJH01020	M	H	SII	NS-AQ		EMC		Y (2)	Y (5)	Y (6)
T PP3 N-Drv-E2 Brg B	30KAA30CT003B	33UJH01020	M	H	SII	NS-AQ		EMC		Y (2)	Y (5)	Y (6)
T M3 Wndg1	30KAA30CT005	33UJH01020	M	H	SII	NS-AQ		EMC		Y (2)	Y (5)	Y (6)
T M3 Wndg2	30KAA30CT006	33UJH01020	M	H	SII	NS-AQ		EMC		Y (2)	Y (5)	Y (6)
T M3 Wndg3	30KAA30CT007	33UJH01020	M	H	SII	NS-AQ		EMC		Y (2)	Y (5)	Y (6)
T M3 Air W Cl Inl A	30KAA30CT011	33UJH01020	M	H	SII	NS-AQ		EMC		Y (2)	Y (5)	Y (6)
T M3 Air W Cl Outl A	30KAA30CT012	33UJH01020	M	H	SII	NS-AQ		EMC		Y (2)	Y (5)	Y (6)
T M3 PP-E Brg A	30KAA30CT015A	33UJH01020	M	H	SII	NS-AQ		EMC		Y (2)	Y (5)	Y (6)
T M3 PP-E Brg B	30KAA30CT015B	33UJH01020	M	H	SII	NS-AQ		EMC		Y (2)	Y (5)	Y (6)
T M3 N-PP-E Brg A	30KAA30CT016A	33UJH01020	M	H	SII	NS-AQ		EMC		Y (2)	Y (5)	Y (6)
T M3 N-PP-E Brg B	30KAA30CT016B	33UJH01020	M	H	SII	NS-AQ		EMC		Y (2)	Y (5)	Y (6)
T Outl HX30 Meas	30KAA30CT090	33UJH10020	M	H	SI	S	1E	EMC		Y (2)	Y (5)	Y (6)
T Inl HX30 Meas	30KAA30CT092	33UJH01020	M	H	SI	S	1E	EMC		Y (2)	Y (5)	Y (6)
T Retn CCWS PP Cl3	30KAA30CT288	33UJH01020	M	H	SI	S	1E	EMC		Y (2)	Y (5)	Y (6)
T1 CW Users Trn30	30KAA30CT893	33UJH10020	M	H	ES SI	S	1E	EMC		Y (2)	Y (5)	Y (6)
T2 CW Users Trn30	30KAA30CT894	33UJH10020	M	H	ES SI	S	1E	EMC		Y (2)	Y (5)	Y (6)
T3 CW Users Trn30	30KAA30CT895	33UJH10020	M	H	ES SI	S	1E	EMC		Y (2)	Y (5)	Y (6)
F LHSI HX3 Meas	30KAA32CF062	33UJH05020	M	H	ES SI	S	1E	EMC		Y (2)	Y (5)	Y (6)
F MHSI PP3	30KAA32CF066	33UJH01005	M	H	ES SI	S	1E	EMC		Y (2)	Y (5)	Y (6)
F Safe Chil3	30KAA32CF068	33UJH05020	M	H	ES SI	S	1E	EMC		Y (2)	Y (5)	Y (6)
F LHSI PP3	30KAA32CF080	33UJH01005	M	H	ES SI	S	1E	EMC		Y (2)	Y (5)	Y (6)
F Test MHSI PP3	30KAA32CF264	33UJH01005	M	H	SI	S	1E	EMC		Y (2)	Y (5)	Y (6)
F LHSI Test PP3	30KAA32CF282	33UJH01005	M	H	SI	S	1E	EMC		Y (2)	Y (5)	Y (6)

Table 3.11-1—List of Environmentally Qualified Electrical/I&C Equipment (Sheet 45 of 130)

Name Tag (Equipment Description)	Tag Number	Local Area KKS ID (Room Location)	EQ Environment (Note 1)	Radiation Environment Zone (Note 2)	EQ Designated Function (Note 3)		Safety Class (Note 4)				EQ Program Designation (Note 5)		
G Opng *32AA005*	30KAA32CG005A	33UJH10002	M	H	ES	SI	S	1E	EMC		Y (2)	Y (5)	Y (6)
G CLS *32AA005*	30KAA32CG005B	33UJH10002	M	H	ES	SI	S	1E	EMC		Y (2)	Y (5)	Y (6)
G Meas *32AA101*	30KAA32CG101	33UJH05038	M	H	ES	SI	S	1E	EMC		Y (2)	Y (5)	Y (6)
P Dnstr Safe Chil3	30KAA32CP501	33UJH05020	M	H		SI	S	1E	EMC		Y (2)	Y (5)	Y (6)
P Dnstr *32 AA101*	30KAA32CP502	33UJH05020	M	H		SI	S	1E	EMC		Y (2)	Y (5)	Y (6)
P Upstr Safe Chil3	30KAA32CP503	33UJH05020	M	H		SI	S	1E	EMC		Y (2)	Y (5)	Y (6)
T Dnstr MHSI PP3	30KAA32CT258	33UJH01005	M	H		SI	S	1E	EMC		Y (2)	Y (5)	Y (6)
T Dnstr LHSI PP3	30KAA32CT284	33UJH01005	M	H		SI	S	1E	EMC		Y (2)	Y (5)	Y (6)
T Dnstr Safe Chil3	30KAA32CT553	33UJH05020	M	H		SI	S	1E	EMC		Y (2)	Y (5)	Y (6)
T Dnstr LHSI HX3	30KAA32CT555	33UJH05006	M	H		SI	S	1E	EMC		Y (2)	Y (5)	Y (6)
Motor Fdr Cur L2	30KAA40CE102	34UJK18026	M	M		SII	NS-AQ		EMC			Y (5)	Y (6)
F Trn40 HX Out Meas	30KAA40CF053	34UJH10026	M	H	ES	SI	S	1E	EMC		Y (2)	Y (5)	Y (6)
Ctr-V DW Trn40	30KAA40CF057	34UJH01024	M	H		SI	S	1E	EMC		Y (2)	Y (5)	Y (6)
F Retn CCWS PP Cl4	30KAA40CF240	34UJH01026	M	H	ES	SI	S	1E	EMC		Y (2)	Y (5)	Y (6)
F Trn40 HX Out Test Meas	30KAA40CF255	34UJH10026	M	H		SI	S	1E	EMC		Y (2)	Y (5)	Y (6)
F Retn SUR Tk40 Meas	30KAA40CF570	34UJH01026	M	H		SI	S	1E	EMC		Y (2)	Y (5)	Y (6)
G Opng *40AA006*	30KAA40CG006A	34UJH10004	M	H	ES	SI	S	1E	EMC		Y (2)	Y (5)	Y (6)
G Cls *40AA006*	30KAA40CG006B	34UJH10004	M	H	ES	SI	S	1E	EMC		Y (2)	Y (5)	Y (6)
G Opng *40AA010*	30KAA40CG010A	34UJH10004	M	H	ES	SI	S	1E	EMC		Y (2)	Y (5)	Y (6)
G Cls *40AA010*	30KAA40CG010B	34UJH10004	M	H	ES	SI	S	1E	EMC		Y (2)	Y (5)	Y (6)
G Opng *40AA027*	30KAA40CG027A	34UJH01024	M	H	ES	SI	S	1E	EMC		Y (2)	Y (5)	Y (6)
G Cls *40AA027*	30KAA40CG027B	34UJH01024	M	H	ES	SI	S	1E	EMC		Y (2)	Y (5)	Y (6)
G Opng *40AA032*	30KAA40CG032A	34UJH10004	M	H	ES	SI	S	1E	EMC		Y (2)	Y (5)	Y (6)
G Cls *40AA032*	30KAA40CG032B	34UJH10004	M	H	ES	SI	S	1E	EMC		Y (2)	Y (5)	Y (6)
G Opng *40AA033*	30KAA40CG033A	34UJH10004	M	H	ES	SI	S	1E	EMC		Y (2)	Y (5)	Y (6)
G Cls *40AA033*	30KAA40CG033B	34UJH10004	M	H	ES	SI	S	1E	EMC		Y (2)	Y (5)	Y (6)
G Meas *40AA112*	30KAA40CG112	34UJH10026	M	H	ES	SI	S	1E	EMC		Y (2)	Y (5)	Y (6)
Tr 4 SUR Tk Lvl 1	30KAA40CL094	34UJK31027	M	M	ES	SI	S	1E	EMC			Y (5)	Y (6)
Tr 4 SUR Tk Lvl 2	30KAA40CL099	34UJK31027	M	M	ES	SI	S	1E	EMC			Y (5)	Y (6)
L Oil PP4 Drv-E Brg	30KAA40CL520	34UJH01026	M	H		SII	NS-AQ		EMC		Y (2)	Y (5)	Y (6)
L Oil PP4 Brg	30KAA40CL521	34UJH01026	M	H		SII	NS-AQ		EMC		Y (2)	Y (5)	Y (6)
L SUR Tk40 Meas	30KAA40CL598	34UJK31027	M	M		SI	S	1E	EMC			Y (5)	Y (6)
DP HX40 Meas	30KAA40CP051	34UJH05026	M	H		SI	S	1E	EMC		Y (2)	Y (5)	Y (6)

Table 3.11-1—List of Environmentally Qualified Electrical/I&C Equipment (Sheet 46 of 130)

Name Tag (Equipment Description)	Tag Number	Local Area KKS ID (Room Location)	EQ Environment (Note 1)	Radiation Environment Zone (Note 2)	EQ Designated Function (Note 3)	Safety Class (Note 4)				EQ Program Designation (Note 5)		
P Dnstr Pp40	30KAA40CP083	34UJH01026	M	H	ES	SI	S	1E	EMC		Y (2)	Y (5) Y (6)
DP Suct Strn40	30KAA40CP274	34UJH01026	M	H		SI	S	1E	EMC		Y (2)	Y (5) Y (6)
P Dnstr HX40	30KAA40CP297	34UJH10026	M	H		SI	S	1E	EMC		Y (2)	Y (5) Y (6)
P Upstr PP40	30KAA40CP578	34UJH01026	M	H		SI	S	1E	EMC		Y (2)	Y (5) Y (6)
P Test Dnstr PP40	30KAA40CP579	34UJH01026	M	H		SI	S	1E	EMC		Y (2)	Y (5) Y (6)
T CW Users Trn40	30KAA40CP587	34UJH10026	M	H		SI	S	1E	EMC		Y (2)	Y (5) Y (6)
P M Cl PP40	30KAA40CP591	34UJH01026	M	H		SI	S	1E	EMC		Y (2)	Y (5) Y (6)
Safe C Cool Syst 4	30KAA40CR001	34UJH05026	M	H		SI	S	1E	EMC		Y (2)	Y (5) Y (6)
T PP4 N-Drv-E1 Brg A	30KAA40CT001A	34UJH01026	M	H		SII	NS-AQ		EMC		Y (2)	Y (5) Y (6)
T PP4 N-Drv-E1 BRG B	30KAA40CT001B	34UJH01026	M	H		SII	NS-AQ		EMC		Y (2)	Y (5) Y (6)
T PP4 Drv-E Brg A	30KAA40CT002A	34UJH01026	M	H		SII	NS-AQ		EMC		Y (2)	Y (5) Y (6)
T PP4 Drv-E Brg B	30KAA40CT002B	34UJH01026	M	H		SII	NS-AQ		EMC		Y (2)	Y (5) Y (6)
T PP4 N-Drv-E2 Brg A	30KAA40CT003A	34UJH01026	M	H		SII	NS-AQ		EMC		Y (2)	Y (5) Y (6)
T PP4 N-Drv-E2 Brg B	30KAA40CT003B	34UJH01026	M	H		SII	NS-AQ		EMC		Y (2)	Y (5) Y (6)
T M4 Wndg1	30KAA40CT005	34UJH01026	M	H		SII	NS-AQ		EMC		Y (2)	Y (5) Y (6)
T M4 Wndg2	30KAA40CT006	34UJH01026	M	H		SII	NS-AQ		EMC		Y (2)	Y (5) Y (6)
T M4 Wndg3	30KAA40CT007	34UJH01026	M	H		SII	NS-AQ		EMC		Y (2)	Y (5) Y (6)
T M4 Air W Cl Inl A	30KAA40CT011	34UJH01026	M	H		SII	NS-AQ		EMC		Y (2)	Y (5) Y (6)
T M4 Air W Cl Outl A	30KAA40CT012	34UJH01026	M	H		SII	NS-AQ		EMC		Y (2)	Y (5) Y (6)
T M4 PP-E Brg A	30KAA40CT015A	34UJH01026	M	H		SII	NS-AQ		EMC		Y (2)	Y (5) Y (6)
T M4 PP-E Brg B	30KAA40CT015B	34UJH01026	M	H		SII	NS-AQ		EMC		Y (2)	Y (5) Y (6)
T M4 PP-E Brg A	30KAA40CT016A	34UJH01026	M	H		SII	NS-AQ		EMC		Y (2)	Y (5) Y (6)
T M4 N-PP-E Brg B	30KAA40CT016B	34UJH01026	M	H		SII	NS-AQ		EMC		Y (2)	Y (5) Y (6)
T Outl HX40 Meas	30KAA40CT090	34UJH10026	M	H		SI	S	1E	EMC		Y (2)	Y (5) Y (6)
T Inl HX40 Meas	30KAA40CT092	34UJH01026	M	H		SI	S	1E	EMC		Y (2)	Y (5) Y (6)
T Retn CCWS PP Cl4	30KAA40CT288	34UJH01026	M	H		SI	S	1E	EMC		Y (2)	Y (5) Y (6)
T1 CW Users Trn40	30KAA40CT893	34UJH10026	M	H	ES	SI	S	1E	EMC		Y (2)	Y (5) Y (6)
T2 CW Users Trn40	30KAA40CT894	34UJH10026	M	H	ES	SI	S	1E	EMC		Y (2)	Y (5) Y (6)
T3 CW Users Trn40	30KAA40CT895	34UJH10026	M	H	ES	SI	S	1E	EMC		Y (2)	Y (5) Y (6)
F LHSI HX4 Meas	30KAA42CF062	34UJH05025	M	H	ES	SI	S	1E	EMC		Y (2)	Y (5) Y (6)
F MHSI PP4	30KAA42CF066	34UJH01001	M	H	ES	SI	S	1E	EMC		Y (2)	Y (5) Y (6)
F Test MHSI PP3	30KAA42CF264	34UJH01001	M	H		SI	S	1E	EMC		Y (2)	Y (5) Y (6)
G Opng *42AA005*	30KAA42CG005A	34UJH10004	M	H	ES	SI	S	1E	EMC		Y (2)	Y (5) Y (6)

Table 3.11-1—List of Environmentally Qualified Electrical/I&C Equipment (Sheet 47 of 130)

Name Tag (Equipment Description)	Tag Number	Local Area KKS ID (Room Location)	EQ Environment (Note 1)	Radiation Environment Zone (Note 2)	EQ Designated Function (Note 3)			Safety Class (Note 4)				EQ Program Designation (Note 5)			
G Cls *42AA005*	30KAA42CG005B	34UJH10004	M	H	ES		SI	S	1E	EMC			Y (2)	Y (5)	Y (6)
T Dnstr MHSI PP4	30KAA42CT258	34UJH01001	M	H			SI	S	1E	EMC			Y (2)	Y (5)	Y (6)
T Dnstr LHSI HX4	30KAA42CT555	34UJH05005	M	H			SI	S	1E	EMC			Y (2)	Y (5)	Y (6)
~~L Oil Min PP~~	~~30KAA80CL501~~	~~34UJH01026~~	~~M~~	~~H~~			~~SII~~	~~NS AQ~~					~~Y (2)~~	~~Y (5)~~	
~~T Brg KAA80 AP001~~	~~30KAA80CT001A~~	~~34UJH01026~~	~~M~~	~~H~~			~~SII~~	~~NS AQ~~					~~Y (2)~~	~~Y (5)~~	
~~T Brg KAA80 AP001~~	~~30KAA80CT001B~~	~~34UJH01026~~	~~M~~	~~H~~			~~SII~~	~~NS AQ~~					~~Y (2)~~	~~Y (5)~~	
~~T Thr Brg1 Main PP50~~	~~30KAA80CT002A~~	~~34UJH01026~~	~~M~~	~~H~~			~~SII~~	~~NS AQ~~					~~Y (2)~~	~~Y (5)~~	
~~T Thr Brg1 Main PP50~~	~~30KAA80CT002B~~	~~34UJH01026~~	~~M~~	~~H~~			~~SII~~	~~NS AQ~~					~~Y (2)~~	~~Y (5)~~	
~~T Thr Brg2 Main PP50~~	~~30KAA80CT003A~~	~~34UJH01026~~	~~M~~	~~H~~			~~SII~~	~~NS AQ~~					~~Y (2)~~	~~Y (5)~~	
~~T Thr Brg2 Main PP50~~	~~30KAA80CT003B~~	~~34UJH01026~~	~~M~~	~~H~~			~~SII~~	~~NS AQ~~					~~Y (2)~~	~~Y (5)~~	
~~T Brg 1 Main PP80 Mtr~~	~~30KAA80CT051~~	~~34UJH01026~~	~~M~~	~~H~~			~~SII~~	~~NS AQ~~					~~Y (2)~~	~~Y (5)~~	
~~T Brg 2 Main PP80 M~~	~~30KAA80CT052~~	~~34UJH01026~~	~~M~~	~~H~~			~~SII~~	~~NS AQ~~					~~Y (2)~~	~~Y (5)~~	
~~T Wndg 1 Main PP80 M~~	~~30KAA80CT061~~	~~34UJH01026~~	~~M~~	~~H~~			~~SII~~	~~NS AQ~~					~~Y (2)~~	~~Y (5)~~	
~~T Wndg 2 Main PP80 M~~	~~30KAA80CT062~~	~~34UJH01026~~	~~M~~	~~H~~			~~SII~~	~~NS AQ~~					~~Y (2)~~	~~Y (5)~~	
~~T Wndg 3 Main PP80 M~~	~~30KAA80CT063~~	~~34UJH01026~~	~~M~~	~~H~~			~~SII~~	~~NS AQ~~					~~Y (2)~~	~~Y (5)~~	
~~T A Inl Main PP80 M~~	~~30KAA80CT071~~	~~34UJH01026~~	~~M~~	~~H~~			~~SII~~	~~NS AQ~~					~~Y (2)~~	~~Y (5)~~	
~~T A Outl Main PP80 M~~	~~30KAA80CT072~~	~~34UJH01026~~	~~M~~	~~H~~			~~SII~~	~~NS AQ~~					~~Y (2)~~	~~Y (5)~~	
FAJ-V FAK10 AC001 - Act	30KAB10AA134	30UFA06023	M	H	ES		SI	S	1E	EMC			Y (2)	Y (5)	Y (6)
FAJ-V FAK20 AC001 - Act	30KAB20AA134	30UFA06074	M	H	ES		SI	S	1E	EMC			Y (2)	Y (5)	Y (6)
Civ Upstr Thbarr 1&2 - Act	30KAB30AA049	31UJH10004	M	H	ES	PAM	SI	S	1E	EMC			Y (2)	Y (5)	Y (6)
Civ Dnstr Thbarr 1&2 - Act	30KAB30AA051	30UJA11013	H	H	ES	PAM	SI	S	1E	EMC		Y (1)		Y (5)	
Civ Dnstr Thbarr 1&2 - Act	30KAB30AA052	31UJH10004	M	H	ES	PAM	SI	S	1E	EMC			Y (2)	Y (5)	Y (6)
Civ Upstr Thbarr 3&4 - Act	30KAB30AA053	34UJH10004	M	H	ES	PAM	SI	S	1E	EMC			Y (2)	Y (5)	Y (6)
Civ Dnstr Thbarr 3&4 - Act	30KAB30AA055	30UJA11015	H	H	ES	PAM	SI	S	1E	EMC		Y (1)		Y (5)	
Civ Dnstr Thbarr 3&4 - Act	30KAB30AA056	34UJH10004	M	H	ES	PAM	SI	S	1E	EMC			Y (2)	Y (5)	Y (6)
Civ *KLA/KT* Users - Act	30KAB40AA001	31UJH10004	M	H	ES	PAM	SI	S	1E	EMC			Y (2)	Y (5)	Y (6)
Civ *KLA/KT* Users - Act	30KAB40AA006	31UJH10004	M	H	ES	PAM	SI	S	1E	EMC			Y (2)	Y (5)	Y (6)
Civ *KLA/KT* Users - Act	30KAB40AA012	30UJA11014	H	H	ES	PAM	SI	S	1E	EMC		Y (1)		Y (5)	
V 1 Upstr *UKA/UKS* - Act	30KAB50AA001	34UJH10004	M	H	ES		SI	S	1E	EMC			Y (2)	Y (5)	Y (6)
V Dnstr *UKA/UKS* - Act	30KAB50AA004	34UJH10004	M	H	ES		SI	S	1E	EMC			Y (2)	Y (5)	Y (6)
V 2 Upstr *UKA/UKS* - Act	30KAB50AA006	34UJH10004	M	H	ES		SI	S	1E	EMC			Y (2)	Y (5)	Y (6)
Civ *KBA*, RCP 1 & 2 - Act	30KAB60AA013	31UJH10004	M	H	ES	PAM	SI	S	1E	EMC			Y (2)	Y (5)	Y (6)
Civ *KBA*, RCP 1 & 2 - Act	30KAB60AA018	30UJA11013	H	H	ES	PAM	SI	S	1E	EMC		Y (1)		Y (5)	

Table 3.11-1—List of Environmentally Qualified Electrical/I&C Equipment (Sheet 48 of 130)

Name Tag (Equipment Description)	Tag Number	Local Area KKS ID (Room Location)	EQ Environment (Note 1)	Radiation Environment Zone (Note 2)	EQ Designated Function (Note 3)			Safety Class (Note 4)				EQ Program Designation (Note 5)		
Civ *KBA*, RCP 1 & 2 - Act	30KAB60AA019	31UJH10004	M	H	ES	PAM	SI	S	1E	EMC		Y (2)	Y (5)	Y (6)
C-V KBA11 AC001 - Act	30KAB60AA116	30UJA11013	H	H			SI	S	1E	EMC		Y (1)	Y (5)	
Civ *KBA*, RCP 3 & 4 - Act	30KAB70AA013	34UJH10004	M	H	ES	PAM	SI	S	1E	EMC		Y (2)	Y (5)	Y (6)
Civ *KBA*, RCP 3 & 4 - Act	30KAB70AA018	30UJA11016	H	H	ES	PAM	SI	S	1E	EMC		Y (1)	Y (5)	
Civ *KBA*, RCP 3 & 4 - Act	30KAB70AA019	34UJH10004	M	H	ES	PAM	SI	S	1E	EMC		Y (2)	Y (5)	Y (6)
C-V KBA12 AC001 - Act	30KAB70AA116	30UJA11016	H	H			SI	S	1E	EMC		Y (1)	Y (5)	
V 1 Upstr *QN* Users - Act	30KAB80AA015	31UJH10004	M	H	ES		SI	S	1E	EMC		Y (2)	Y (5)	Y (6)
V 2 Upstr *QN* Users - Act	30KAB80AA016	31UJH10004	M	H	ES		SI	S	1E	EMC		Y (2)	Y (5)	Y (6)
F FPCS HX1 Meas	30KAB10CF070	30UFA10002	M	H	ES		SI	S	1E	EMC		Y (2)	Y (5)	Y (6)
F CVCS PP1	30KAB10CF093	30UFA06035	M	H			SI	S	1E	EMC		Y (2)	Y (5)	Y (6)
F Test CVCS PP1	30KAB10CF289	30UFA06035	M	H			SI	S	1E	EMC		Y (2)	Y (5)	Y (6)
F NSS SG1 SG2	30KAB10CF564	30UFA06086	M	H			SI	S	1E	EMC		Y (2)	Y (5)	Y (6)
F NSS HI1 PZR	30KAB10CF566	30UFA06086	M	H			SI	S	1E	EMC		Y (2)	Y (5)	Y (6)
F Dnstr KLL61AC002-3	30KAB10CF567	30UFA05026	M	H			SI	S	1E	EMC		Y (2)	Y (5)	Y (6)
G Meas *KAB10AA134*	30KAB10CG134	30UFA06023	M	H			SI	S	1E	EMC		Y (2)	Y (5)	Y (6)
P Test Dnr QUC11 AC001	30KAB10CP250	30UFA06083	M	H			SI	S	1E	EMC		Y (2)	Y (5)	Y (6)
P Test Dnr QUC12 AC001	30KAB10CP252	30UFA06083	M	H			SI	S	1E	EMC		Y (2)	Y (5)	Y (6)
P Test Dnr KUA30 AC001	30KAB10CP254	30UFA06082	M	H			SI	S	1E	EMC		Y (2)	Y (5)	Y (6)
P Test Dnr KUA20 AC001	30KAB10CP256	30UFA06082	M	H			SI	S	1E	EMC		Y (2)	Y (5)	Y (6)
P Test Dnr KBA31 AC103	30KAB10CP260	30UFA06035	M	H			SI	S	1E	EMC		Y (2)	Y (5)	Y (6)
P Test Dnr KBA31 AC101	30KAB10CP262	30UFA06035	M	H			SI	S	1E	EMC		Y (2)	Y (5)	Y (6)
P Test Upr Sampl Clrs	30KAB10CP282	30UFA06083	M	H			SI	S	1E	EMC		Y (2)	Y (5)	Y (6)
P Test Upstr KBA Clr	30KAB10CP284	30UFA06023	M	H			SI	S	1E	EMC		Y (2)	Y (5)	Y (6)
P Test KBA31 AC102	30KAB10CP292	30UFA06035	M	H			SI	S	1E	EMC		Y (2)	Y (5)	Y (6)
T Test Upstr FPCS HX1	30KAB10CT267	30UFA06023	M	H			SI	S	1E	EMC		Y (2)	Y (5)	Y (6)
T Test Dnstr FPCS HX1	30KAB10CT268	30UFA06023	M	H			SI	S	1E	EMC		Y (2)	Y (5)	Y (6)
T Test NSS SG1 SG2	30KAB10CT272	30UFA06083	M	H			SI	S	1E	EMC		Y (2)	Y (5)	Y (6)
T Test NSS HL1 Pzr	30KAB10CT273	30UFA06082	M	H			SI	S	1E	EMC		Y (2)	Y (5)	Y (6)
T Dnstr FPCS HX1	30KAB10CT565	30UFA06023	M	H			SI	S	1E	EMC		Y (2)	Y (5)	Y (6)
T CVCS PP1	30KAB10CT578	30UFA06035	M	H			SI	S	1E	EMC		Y (2)	Y (5)	Y (6)
F FPCS HX2 Meas	30KAB20CF070	30UFA10052	M	H	ES		SI	S	1E	EMC		Y (2)	Y (5)	Y (6)
F CVCS PP2	30KAB20CF093	30UFA06085	M	H			SI	S	1E	EMC		Y (2)	Y (5)	Y (6)
F Test CVCS PP2	30KAB20CF289	30UFA06085	M	H			SI	S	1E	EMC		Y (2)	Y (5)	Y (6)

Table 3.11-1—List of Environmentally Qualified Electrical/I&C Equipment (Sheet 49 of 130)

Name Tag (Equipment Description)	Tag Number	Local Area KKS ID (Room Location)	EQ Environment (Note 1)	Radiation Environment Zone (Note 2)	EQ Designated Function (Note 3)	Safety Class (Note 4)				EQ Program Designation (Note 5)		
F NSS SG3 SG4	30KAB20CF564	30UFA06086	M	H	SI	S	1E	EMC		Y (2)	Y (5)	Y (6)
F Dnstr NSS HL3	30KAB20CF566	30UFA06086	M	H	SI	S	1E	EMC		Y (2)	Y (5)	Y (6)
F Dnstr KLL64AC002-3	30KAB20CF567	30UFA06074	M	H	SI	S	1E	EMC		Y (2)	Y (5)	Y (6)
G Meas *KAB20AA134*	30KAB20CG134	30UFA06074	M	H	SI	S	1E	EMC		Y (2)	Y (5)	Y (6)
P Test Dnr QUC13 AC001	30KAB20CP252	30UFA06083	M	H	SI	S	1E	EMC		Y (2)	Y (5)	Y (6)
P Test Dnr QUC14 AC001	30KAB20CP254	30UFA06083	M	H	SI	S	1E	EMC		Y (2)	Y (5)	Y (6)
P Test Dnr KUA10 AC001	30KAB20CP256	30UFA06082	M	H	SI	S	1E	EMC		Y (2)	Y (5)	Y (6)
P Test Dnr CVCS PP Oil 2	30KAB20CP260	30UFA06085	M	H	SI	S	1E	EMC		Y (2)	Y (5)	Y (6)
P Test Dnr CVCS PP M 2	30KAB20CP262	30UFA06085	M	H	SI	S	1E	EMC		Y (2)	Y (5)	Y (6)
P Test Upr Sampl Clrs	30KAB20CP279	30UFA06084	M	H	SI	S	1E	EMC		Y (2)	Y (5)	Y (6)
P Test Upstr KBA Clr	30KAB20CP280	30UFA06084	M	H	SI	S	1E	EMC		Y (2)	Y (5)	Y (6)
P Test Dnr CVCS PP SL 2	30KAB20CP292	30UFA06085	M	H	SI	S	1E	EMC		Y (2)	Y (5)	Y (6)
T Upstr FPCS HX2	30KAB20CT267	30UFA05076	M	H	SI	S	1E	EMC		Y (2)	Y (5)	Y (6)
T Dnstr FPCS HX2	30KAB20CT268	30UFA06075	M	H	SI	S	1E	EMC		Y (2)	Y (5)	Y (6)
T Test NSS SG3 SG4	30KAB20CT272	30UFA06083	M	H	SI	S	1E	EMC		Y (2)	Y (5)	Y (6)
T Test NSS CL3	30KAB20CT273	30UFA06082	M	H	SI	S	1E	EMC		Y (2)	Y (5)	Y (6)
T Dnstr FPCS HX2	30KAB20CT565	30UFA06075	M	H	SI	S	1E	EMC		Y (2)	Y (5)	Y (6)
T CVCS PP2	30KAB20CT578	30UFA06084	M	H	SI	S	1E	EMC		Y (2)	Y (5)	Y (6)
F Upr Brg MCP1	30KAB30CF062	30UJA23002	H	H	SI	S	1E	EMC		Y (1)	Y (5)	
F M MCP1	30KAB30CF064	30UJA18002	H	H	SI	S	1E	EMC		Y (1)	Y (5)	
F Dnr Brg MCP1	30KAB30CF066	30UJA18002	H	H	SI	S	1E	EMC		Y (1)	Y (5)	
F Thml Barr1	30KAB30CF068	30UJA11013	H	H	SI	S	1E	EMC		Y (1)	Y (5)	
F Upr Brg MCP2	30KAB30CF072	30UJA23005	H	H	SI	S	1E	EMC		Y (1)	Y (5)	
F M MCP2	30KAB30CF074	30UJA18005	H	H	SI	S	1E	EMC		Y (1)	Y (5)	
F Dnr Brg MCP2	30KAB30CF076	30UJA18005	H	H	SI	S	1E	EMC		Y (1)	Y (5)	
F THml Barr2	30KAB30CF078	30UJA11014	H	H	SI	S	1E	EMC		Y (1)	Y (5)	
F Upr Brg MCP3	30KAB30CF082	30UJA23006	H	H	SI	S	1E	EMC		Y (1)	Y (5)	
F M MCP3	30KAB30CF084	30UJA18006	H	H	SI	S	1E	EMC		Y (1)	Y (5)	
F Dnr Brg MCP3	30KAB30CF086	30UJA18006	H	H	SI	S	1E	EMC		Y (1)	Y (5)	
F Thml Barr3	30KAB30CF088	30UJA11015	H	H	SI	S	1E	EMC		Y (1)	Y (5)	
F Upr Brg MCP4	30KAB30CF092	30UJA23009	H	H	SI	S	1E	EMC		Y (1)	Y (5)	
F M MCP4	30KAB30CF094	30UJA18009	H	H	SI	S	1E	EMC		Y (1)	Y (5)	
F Dnr Brg MCP4	30KAB30CF096	30UJA18009	H	H	SI	S	1E	EMC		Y (1)	Y (5)	

Table 3.11-1—List of Environmentally Qualified Electrical/I&C Equipment (Sheet 50 of 130)

Name Tag (Equipment Description)	Tag Number	Local Area KKS ID (Room Location)	EQ Environment (Note 1)	Radiation Environment Zone (Note 2)	EQ Designated Function (Note 3)	Safety Class (Note 4)				EQ Program Designation (Note 5)			
F Thml Barr4	30KAB30CF098	30UJA11016	H	H	SI	S	1E	EMC		Y (1)		Y (5)	
F Test Upr Brg MCP1	30KAB30CF261	30UJA23002	H	H	SI	S	1E	EMC		Y (1)		Y (5)	
F Test M MCP1	30KAB30CF263	30UJA18002	H	H	SI	S	1E	EMC		Y (1)		Y (5)	
F Test Dnr Brg MCP1	30KAB30CF265	30UJA18002	H	H	SI	S	1E	EMC		Y (1)		Y (5)	
F Test Upr Brg MCP2	30KAB30CF271	30UJA23005	H	H	SI	S	1E	EMC		Y (1)		Y (5)	
F Test M MCP2	30KAB30CF273	30UJA18005	H	H	SI	S	1E	EMC		Y (1)		Y (5)	
F Test Dnr Brg MCP2	30KAB30CF275	30UJA18005	H	H	SI	S	1E	EMC		Y (1)		Y (5)	
F Test Upr Brg MCP3	30KAB30CF281	30UJA23006	H	H	SI	S	1E	EMC		Y (1)		Y (5)	
F Test M MCP3	30KAB30CF283	30UJA18006	H	H	SI	S	1E	EMC		Y (1)		Y (5)	
F Test Dnr Brg MCP3	30KAB30CF285	30UJA18006	H	H	SI	S	1E	EMC		Y (1)		Y (5)	
G Opng *KAB30AA191*	30KAB30CG191A	30UJA11013	H	H	SI	S	1E	EMC		Y (1)		Y (5)	
G Opng *KAB30AA192*	30KAB30CG192A	30UJA15015	H	H	SI	S	1E	EMC		Y (1)		Y (5)	
T Dnstr MCP1	30KAB30CT060	30UJA18013	H	H	SI	S	1E	EMC		Y (1)		Y (5)	
T Thml Barr 1	30KAB30CT061	30UJA11013	H	H	SI	S	1E	EMC		Y (1)		Y (5)	
T Dnstr MCP2	30KAB30CT070	30UJA18014	H	H	SI	S	1E	EMC		Y (1)		Y (5)	
T Thml BARR 2	30KAB30CT071	30UJA11014	H	H	SI	S	1E	EMC		Y (1)		Y (5)	
T Dnstr MCP3	30KAB30CT080	30UJA18015	H	H	SI	S	1E	EMC		Y (1)		Y (5)	
T Thml Barr 3	30KAB30CT081	30UJA11015	H	H	SI	S	1E	EMC		Y (1)		Y (5)	
T Dnstr MCP4	30KAB30CT090	30UJA18016	H	H	SI	S	1E	EMC		Y (1)		Y (5)	
T Thml Barr 4	30KAB30CT091	30UJA15009	H	H	SI	S	1E	EMC		Y (1)		Y (5)	
F DnstR RB NC Com1B	30KAB40CF055	31UJH10004	M	H	SI	S	1E	EMC			Y (2)	Y (5)	Y (6)
F Upstr RB NC Com1B	30KAB40CF058	31UJH10004	M	H	SI	S	1E	EMC			Y (2)	Y (5)	Y (6)
F DNSTR KTA HX	30KAB40CF252	30UJA07016	H	H	SI	S	1E	EMC		Y (1)		Y (5)	
G Opng *KAB40AA001*	30KAB40CG001A	31UJH10004	M	H	ES SI	S	1E	EMC			Y (2)	Y (5)	Y (6)
G Cls *KAB40AA001*	30KAB40CG001B	31UJH10004	M	H	ES SI	S	1E	EMC			Y (2)	Y (5)	Y (6)
G Opng *KAB40AA006*	30KAB40CG006A	31UJH10004	M	H	ES SI	S	1E	EMC			Y (2)	Y (5)	Y (6)
G Cls *KAB40AA006*	30KAB40CG006B	31UJH10004	M	H	ES SI	S	1E	EMC			Y (2)	Y (5)	Y (6)
G Opng *KAB40AA012*	30KAB40CG012A	30UJA11014	H	H	ES SI	S	1E	EMC		Y (1)		Y (5)	
G Cls *KAB40AA012*	30KAB40CG012B	30UJA11014	H	H	ES SI	S	1E	EMC		Y (1)		Y (5)	
P Test Upstr KAB40 Users	30KAB40CP271	30UJA11013	H	H	SI	S	1E	EMC		Y (1)		Y (5)	
P Test Dnstr KAB40 Users	30KAB40CP272	30UJA11013	H	H	SI	S	1E	EMC		Y (1)		Y (5)	
T RB NC Com1B	30KAB40CT068	31UJH10004	M	H	SI	S	1E	EMC			Y (2)	Y (5)	Y (6)
T Dnstr HVAC 12	30KAB40CT070	30UJA23013	H	H	SI	S	1E	EMC		Y (1)		Y (5)	

Table 3.11-1—List of Environmentally Qualified Electrical/I&C Equipment (Sheet 51 of 130)

Name Tag (Equipment Description)	Tag Number	Local Area KKS ID (Room Location)	EQ Environment (Note 1)	Radiation Environment Zone (Note 2)	EQ Designated Function (Note 3)	Safety Class (Note 4)				EQ Program Designation (Note 5)			
T Dnstr HVAC 34	30KAB40CT073	30UJA23016	H	H	SI	S	1E	EMC		Y (1)		Y (5)	
T Dnstr KLA Cl1	30KAB40CT264	30UJA23013	H	H	SI	S	1E	EMC		Y (1)		Y (5)	
T Dnstr KLA Cl2	30KAB40CT265	30UJA23013	H	H	SI	S	1E	EMC		Y (1)		Y (5)	
T Dnstr KLA Cl3	30KAB40CT266	30UJA23016	H	H	SI	S	1E	EMC		Y (1)		Y (5)	
T Dnstr KLA Cl4	30KAB40CT267	30UJA23016	H	H	SI	S	1E	EMC		Y (1)		Y (5)	
F Upstr NC Com2B	30KAB50CF050	34UJH10004	M	H	SI	S	1E	EMC			Y (2)	Y (5)	Y (6)
F Dnstr NC Com2B	30KAB50CF054	34UJH10004	M	H	SI	S	1E	EMC			Y (2)	Y (5)	Y (6)
G Opng *KAB50AA001*	30KAB50CG001A	34UJH10004	M	H	SI	S	1E	EMC			Y (2)	Y (5)	Y (6)
G Cls *KAB50AA001*	30KAB50CG001B	34UJH10004	M	H	SI	S	1E	EMC			Y (2)	Y (5)	Y (6)
G Opng *KAB50AA004*	30KAB50CG004A	34UJH10004	M	H	SI	S	1E	EMC			Y (2)	Y (5)	Y (6)
G Cls *KAB50AA004*	30KAB50CG004B	34UJH10004	M	H	SI	S	1E	EMC			Y (2)	Y (5)	Y (6)
G Opng *KAB50AA006*	30KAB50CG006A	34UJH10004	M	H	SI	S	1E	EMC			Y (2)	Y (5)	Y (6)
G Cls *KAB50AA006*	30KAB50CG006B	34UJH10004	M	H	SI	S	1E	EMC			Y (2)	Y (5)	Y (6)
F Dnstr CVCS HP Cl1	30KAB60CF050	30UJA07016	H	H	SI	S	1E	EMC		Y (1)		Y (5)	
F Class Com1B	30KAB60CF081	31UJH10004	M	H	SI	S	1E	EMC			Y (2)	Y (5)	Y (6)
G Opng *KAB60AA013*	30KAB60CG013A	31UJH10004	M	H	SI	S	1E	EMC			Y (2)	Y (5)	Y (6)
G Cls *KAB60AA013*	30KAB60CG013B	31UJH10004	M	H	SI	S	1E	EMC			Y (2)	Y (5)	Y (6)
G Opng *KAB60AA018*	30KAB60CG018A	30UJA11013	H	H	SI	S	1E	EMC		Y (1)		Y (5)	
G Cls *KAB60AA018*	30KAB60CG018B	30UJA11013	H	H	SI	S	1E	EMC		Y (1)		Y (5)	
G Opng *KAB60AA019*	30KAB60CG019A	31UJH10004	M	H	SI	S	1E	EMC			Y (2)	Y (5)	Y (6)
G Cls *KAB60AA019*	30KAB60CG019B	31UJH10004	M	H	SI	S	1E	EMC			Y (2)	Y (5)	Y (6)
G Meas *KAB60AA116*	30KAB60CG116	30UJA11013	H	H	SI	S	1E	EMC		Y (1)		Y (5)	
G Opng *60AA191*	30KAB60CG191A	30UJA11013	H	H	SI	S	1E	EMC		Y (1)		Y (5)	
G Acty CCWS Inlet	30KAB60CR001	30UJA11013	H	H	SI	S	1E	EMC		Y (1)		Y (5)	
G Acty CCWS Outlet	30KAB60CR002	30UJA11013	H	H	SI	S	1E	EMC		Y (1)		Y (5)	
T Dnstr CVCS HP Cl1	30KAB60CT082	30UJA07016	H	H	SI	S	1E	EMC		Y (1)		Y (5)	
F Dnstr CVCS HP Cl2	30KAB70CF050	30UJA11016	H	H	SI	S	1E	EMC		Y (1)		Y (5)	
F Class Com2B	30KAB70CF081	34UJH10004	M	H	SI	S	1E	EMC			Y (2)	Y (5)	Y (6)
G Opng *KAB70AA013*	30KAB70CG013A	34UJH10004	M	H	ES SI	S	1E	EMC			Y (2)	Y (5)	Y (6)
G Cls *KAB70AA013*	30KAB70CG013B	34UJH10004	M	H	ES SI	S	1E	EMC			Y (2)	Y (5)	Y (6)
G Opng *KAB70AA018*	30KAB70CG018A	30UJA11016	H	H	ES SI	S	1E	EMC		Y (1)		Y (5)	
G Cls *KAB70AA018*	30KAB70CG018B	30UJA11016	H	H	ES SI	S	1E	EMC		Y (1)		Y (5)	
G Opng *KAB70AA019*	30KAB70CG019A	34UJH10004	M	H	ES SI	S	1E	EMC			Y (2)	Y (5)	Y (6)

Table 3.11-1—List of Environmentally Qualified Electrical/I&C Equipment (Sheet 52 of 130)

Name Tag (Equipment Description)	Tag Number	Local Area KKS ID (Room Location)	EQ Environment (Note 1)	Radiation Environment Zone (Note 2)	EQ Designated Function (Note 3)		Safety Class (Note 4)				EQ Program Designation (Note 5)		
G CLS *KAB70AA019*	30KAB70CG019B	34UJH10004	M	H	ES	SI	S	1E	EMC		Y (2)	Y (5)	Y (6)
G Meas *KAB70AA116*	30KAB70CG116	30UJA11016	H	H		SI	S	1E	EMC		Y (1)	Y (5)	
G Opng *70AA191*	30KAB70CG191A	30UJA11016	H	H		SI	S	1E	EMC		Y (1)	Y (5)	
G Acty CCWS Inlet	30KAB70CR001	30UJA11016	H	H		SI	S	1E	EMC		Y (1)	Y (5)	
G Acty CCWS Outlet	30KAB70CR002	30UJA11016	H	H		SI	S	1E	EMC		Y (1)	Y (5)	
T Dnstr CVCS HP Cl2	30KAB70CT082	30UJA11016	H	H		SI	S	1E	EMC		Y (1)	Y (5)	
F Upstr QNA21 AC002	30KAB80CF060	31UJH10004	M	H		SI	S	1E	EMC		Y (2)	Y (5)	Y (6)
F Dnstr KAB80 Chil	30KAB80CF061	31UJH10004	M	H		SI	S	1E	EMC		Y (2)	Y (5)	Y (6)
G Opng *KAB80AA015*	30KAB80CG015A	31UJH10004	M	H		SI	S	1E	EMC		Y (2)	Y (5)	Y (6)
G Cls *KAB80AA015*	30KAB80CG015B	31UJH10004	M	H		SI	S	1E	EMC		Y (2)	Y (5)	Y (6)
G Opng *KAB80AA016*	30KAB80CG016A	31UJH10004	M	H		SI	S	1E	EMC		Y (2)	Y (5)	Y (6)
G Cls *KAB80AA016*	30KAB80CG016B	31UJH10004	M	H		SI	S	1E	EMC		Y (2)	Y (5)	Y (6)
Essential Service Water System (ESWS)													
30PEB10 AA002 Valve Motor Actuator	30PEB10AA002	31UQB02001	M	M	ES	SI	S	1E	EMC			Y (5)	Y (6)
30PEB10 AA003 Valve Motor Actuator	30PEB10AA003	31UQB02001	M	M	ES	SI	S	1E	EMC			Y (5)	Y (6)
30PEB10 AA005 Valve Motor Actuator	30PEB10AA005	31UQB02001	M	M	ES	SI	S	1E	EMC			Y (5)	Y (6)
30PEB10 AA015 Valve Motor Actuator	30PEB10AA015	31UQB02001	M	M	ES	SI	S	1E	EMC			Y (5)	Y (6)
30PEB10 AA016 Valve Motor Actuator	30PEB10AA016	31UQB02001	M	M	ES	SI	S	1E	EMC			Y (5)	Y (6)
ESW Pump Motor Heater, Train 1	30PEB10AH500	31UQB02001	M	M	ES	SI	S	1E	EMC			Y (5)	Y (6)
ESW Pump Motor, Train 1	30PEB10AP001	31UQB02001	M	M	ES	SI	S	1E	EMC			Y (5)	Y (6)
30PEB10 AT002 Filter Motor Actuator	30PEB10AT002	31UQB02001	M	M	ES	SI	S	1E	EMC			Y (5)	Y (6)
ESW Pump Discharge Flow Indicator	30PEB10CF001	31UQB02001	M	M	ES	SI	S	1E	EMC			Y (5)	Y (6)
CCW HX Outlet Flow Measurement	30PEB10CF002	31UJH05026	M	H	ES	SI	S	1E			Y (2)	Y (5)	
UHS Tower Basin Level Indicator	30PEB10CL001	31URB01003	M	M	ES	SI	S	1E	EMC			Y (5)	Y (6)
UHS Tower Basin Level Indicator	30PEB10CL002	31UQB01002	M	M	ES	SI	S	1E	EMC			Y (5)	Y (6)
ESW Pump Discharge Pressure Indicator	30PEB10CP002	31UQB02001	M	M	ES	SI	S	1E	EMC			Y (5)	Y (6)
ESW Pump Filter Diff Pressure Indicator	30PEB10CP003	31UQB02001	M	M	ES	SI	S	1E	EMC			Y (5)	Y (6)
ESW Pump Discharge Thermocouple	30PEB10CT001	31UQB02001	M	M	ES	SI	S	1E	EMC			Y (5)	Y (6)
SAQ HX DP Measurement	30PEB11CP001	31UQB02001	M	M	ES	SI	S	1E	EMC			Y (5)	Y (6)
SW Pump Bldg Cooler Pressure Indicator	30PEB11CP501	31UQB02001	M	M	ES	SI	S	1E	EMC			Y (5)	Y (6)
SAQ HX Outlet Temp Measurement	30PEB11CT001	31UQB02001	M	M	ES	SI	S	1E	EMC			Y (5)	Y (6)
30PEB20 AA002 Valve Motor Actuator	30PEB20AA002	32UQB02001	M	M	ES	SI	S	1E	EMC			Y (5)	Y (6)
30PEB20 AA003 Valve Motor Actuator	30PEB20AA003	32UQB02001	M	M	ES	SI	S	1E	EMC			Y (5)	Y (6)

Table 3.11-1—List of Environmentally Qualified Electrical/I&C Equipment (Sheet 53 of 130)

Name Tag (Equipment Description)	Tag Number	Local Area KKS ID (Room Location)	EQ Environment (Note 1)	Radiation Environment Zone (Note 2)	EQ Designated Function (Note 3)		Safety Class (Note 4)			EQ Program Designation (Note 5)		
30PEB20 AA005 Valve Motor Actuator	30PEB20AA005	32UQB02001	M	M	ES	SI	S	1E	EMC		Y (5)	Y (6)
30PEB20 AA015 Valve Motor Actuator	30PEB20AA015	32UQB02001	M	M	ES	SI	S	1E	EMC		Y (5)	Y (6)
30PEB20 AA016 Valve Motor Actuator	30PEB20AA016	32UQB02001	M	M	ES	SI	S	1E	EMC		Y (5)	Y (6)
ESW Pump Motor Heater, Train 2	30PEB20AH500	32UQB02001	M	M	ES	SI	S	1E	EMC		Y (5)	Y (6)
ESW Pump Motor, Train 2	30PEB20AP001	32UQB02001	M	M	ES	SI	S	1E	EMC		Y (5)	Y (6)
30PEB20 AT002 Filter Motor Actuator	30PEB20AT002	32UQB02001	M	M	ES	SI	S	1E	EMC		Y (5)	Y (6)
ESW Pump Discharge Flow Indicator	30PEB20CF001	32UQB02001	M	M	ES	SI	S	1E	EMC		Y (5)	Y (6)
CCW HX Outlet Flow Measurement	30PEB20CF002	32UJH05020	M	H	ES	SI	S	1E		Y (2)	Y (5)	
UHS Tower Basin Level Indicator	30PEB20CL001	32URB01003	M	M	ES	SI	S	1E	EMC		Y (5)	Y (6)
UHS Tower Basin Level Indicator	30PEB20CL002	32UQB01002	M	M	ES	SI	S	1E	EMC		Y (5)	Y (6)
ESW Pump Discharge Pressure Indicator	30PEB20CP002	32UQB02001	M	M	ES	SI	S	1E	EMC		Y (5)	Y (6)
ESW Pump Filter Diff Pressure Indicator	30PEB20CP003	32UQB02001	M	M	ES	SI	S	1E	EMC		Y (5)	Y (6)
ESW Pump Discharge Thermocouple	30PEB20CT001	32UQB02001	M	M	ES	SI	S	1E	EMC		Y (5)	Y (6)
SAQ HX DP Measurement	30PEB21CP001	32UQB02001	M	M	ES	SI	S	1E	EMC		Y (5)	Y (6)
SW Pump Bldg Cooler Pressure Indicator	30PEB21CP501	32UQB02001	M	M	ES	SI	S	1E	EMC		Y (5)	Y (6)
SAQ HX Outlet Temp Measurement	30PEB21CT001	32UQB02001	M	M	ES	SI	S	1E	EMC		Y (5)	Y (6)
30PEB30 AA002 Valve Motor Actuator	30PEB30AA002	33UQB02001	M	M	ES	SI	S	1E	EMC		Y (5)	Y (6)
30PEB30 AA003 Valve Motor Actuator	30PEB30AA003	33UQB02001	M	M	ES	SI	S	1E	EMC		Y (5)	Y (6)
30PEB30 AA005 Valve Motor Actuator	30PEB30AA005	33UQB02001	M	M	ES	SI	S	1E	EMC		Y (5)	Y (6)
30PEB30 AA015 Valve Motor Actuator	30PEB30AA015	33UQB02001	M	M	ES	SI	S	1E	EMC		Y (5)	Y (6)
30PEB30 AA016 Valve Motor Actuator	30PEB30AA016	33UQB02001	M	M	ES	SI	S	1E	EMC		Y (5)	Y (6)
ESW Pump Motor Heater, Train 3	30PEB30AH500	33UQB02001	M	M	ES	SI	S	1E	EMC		Y (5)	Y (6)
ESW Pump Motor, Train 3	30PEB30AP001	33UQB02001	M	M	ES	SI	S	1E	EMC		Y (5)	Y (6)
30PEB30 AT002 Filter Motor Actuator	30PEB30AT002	33UQB02001	M	M	ES	SI	S	1E	EMC		Y (5)	Y (6)
ESW Pump Discharge Flow Indicator	30PEB30CF001	33UQB02001	M	M	ES	SI	S	1E	EMC		Y (5)	Y (6)
CCW HX Outlet Flow Measurement	30PEB30CF002	33UJH05020	M	H	ES	SI	S	1E		Y (2)	Y (5)	
UHS Tower Basin Level Indicator	30PEB30CL001	33URB01003	M	M	ES	SI	S	1E	EMC		Y (5)	Y (6)
UHS Tower Basin Level Indicator	30PEB30CL002	33UQB01002	M	M	ES	SI	S	1E	EMC		Y (5)	Y (6)
ESW Pump Discharge Pressure Indicator	30PEB30CP002	33UQB02001	M	M	ES	SI	S	1E	EMC		Y (5)	Y (6)
ESW Pump Filter Diff Pressure Indicator	30PEB30CP003	33UQB02001	M	M	ES	SI	S	1E	EMC		Y (5)	Y (6)
ESW Pump Discharge Thermocouple	30PEB30CT001	33UQB02001	M	M	ES	SI	S	1E	EMC		Y (5)	Y (6)
SAQ HX DP Measurement	30PEB31CP001	33UQB02001	M	M	ES	SI	S	1E	EMC		Y (5)	Y (6)
SW Pump Bldg Cooler Pressure Indicator	30PEB31CP501	33UQB02001	M	M	ES	SI	S	1E	EMC		Y (5)	Y (6)

Table 3.11-1—List of Environmentally Qualified Electrical/I&C Equipment (Sheet 54 of 130)

Name Tag (Equipment Description)	Tag Number	Local Area KKS ID (Room Location)	EQ Environment (Note 1)	Radiation Environment Zone (Note 2)	EQ Designated Function (Note 3)		Safety Class (Note 4)			EQ Program Designation (Note 5)		
SAQ HX Outlet Temp Measurement	30PEB31CT001	33UQB02001	M	M	ES	SI	S	1E	EMC		Y (5)	Y (6)
30PEB40 AA002 Valve Motor Actuator	30PEB40AA002	34UQB02001	M	M	ES	SI	S	1E	EMC		Y (5)	Y (6)
30PEB40 AA003 Valve Motor Actuator	30PEB40AA003	34UQB02001	M	M	ES	SI	S	1E	EMC		Y (5)	Y (6)
30PEB40 AA005 Valve Motor Actuator	30PEB40AA005	34UQB02001	M	M	ES	SI	S	1E	EMC		Y (5)	Y (6)
30PEB40 AA015 Valve Motor Actuator	30PEB40AA015	34UQB02001	M	M	ES	SI	S	1E	EMC		Y (5)	Y (6)
30PEB40 AA016 Valve Motor Actuator	30PEB40AA016	34UQB02001	M	M	ES	SI	S	1E	EMC		Y (5)	Y (6)
ESW Pump Motor Heater, Train 4	30PEB40AH500	34UQB02001	M	M	ES	SI	S	1E	EMC		Y (5)	Y (6)
ESW Pump Motor, Train 4	30PEB40AP001	34UQB02001	M	M	ES	SI	S	1E	EMC		Y (5)	Y (6)
30PEB40 AT002 Filter Motor Actuator	30PEB40AT002	34UQB02001	M	M	ES	SI	S	1E	EMC		Y (5)	Y (6)
ESW Pump Discharge Flow Indicator	30PEB40CF001	34UQB02001	M	M	ES	SI	S	1E	EMC		Y (5)	Y (6)
CCW HX Outlet Flow Measurement	30PEB40CF002	34UJH05026	M	H	ES	SI	S	1E		Y (2)	Y (5)	
UHS Tower Basin Level Indicator	30PEB40CL001	34URB01003	M	M	ES	SI	S	1E	EMC		Y (5)	Y (6)
UHS Tower Basin Level Indicator	30PEB40CL002	34UQB01002	M	M	ES	SI	S	1E	EMC		Y (5)	Y (6)
ESW Pump Discharge Pressure Indicator	30PEB40CP002	34UQB02001	M	M	ES	SI	S	1E	EMC		Y (5)	Y (6)
ESW Pump Filter Diff Pressure Indicator	30PEB40CP003	34UQB02001	M	M	ES	SI	S	1E	EMC		Y (5)	Y (6)
ESW Pump Discharge Thermocouple	30PEB40CT001	34UQB02001	M	M	ES	SI	S	1E	EMC		Y (5)	Y (6)
SAQ HX DP Measurement	30PEB41CP001	34UQB02001	M	M	ES	SI	S	1E	EMC		Y (5)	Y (6)
SW Pump Bldg Cooler Pressure Indicator	30PEB41CP501	34UQB02001	M	M	ES	SI	S	1E	EMC		Y (5)	Y (6)
SAQ HX Outlet Temp Measurement	30PEB41CT001	34UQB02001	M	M	ES	SI	S	1E	EMC		Y (5)	Y (6)
30PED10 AA010 Valve Motor Actuator	30PED10AA010	31UQB02001	M	M	ES	SI	S	1E	EMC		Y (5)	Y (6)
30PED10 AA011 Valve Motor Actuator	30PED10AA011	31UQB02001	M	M	ES	SI	S	1E	EMC		Y (5)	Y (6)
30PED10 AA019 Valve Motor Actuator	30PED10AA019	31UQB02001	M	M	ES	SI	S	1E	EMC		Y (5)	Y (6)
30PED10 AA021 Valve Motor Actuator	30PED10AA021	31UQB02001	M	M	ES	SI	S	1E	EMC		Y (5)	Y (6)
30PED10 AN001 Fan Motor	30PED10AN001	31URB03001	M	M	ES	SI	S	1E	EMC		Y (5)	Y (6)
30PED10 AN002 Fan Motor	30PED10AN002	31URB03002	M	M	ES	SI	S	1E	EMC		Y (5)	Y (6)
30PED20 AA010 Valve Motor Actuator	30PED20AA010	32UQB02001	M	M	ES	SI	S	1E	EMC		Y (5)	Y (6)
30PED20 AA011 Valve Motor Actuator	30PED20AA011	32UQB02001	M	M	ES	SI	S	1E	EMC		Y (5)	Y (6)
30PED20 AA019 Valve Motor Actuator	30PED20AA019	32UQB02001	M	M	ES	SI	S	1E	EMC		Y (5)	Y (6)
30PED20 AA021 Valve Motor Actuator	30PED20AA021	32UQB02001	M	M	ES	SI	S	1E	EMC		Y (5)	Y (6)
30PED20 AN001 Fan Motor	30PED20AN001	32URB03001	M	M	ES	SI	S	1E	EMC		Y (5)	Y (6)
30PED20 AN002 Fan Motor	30PED20AN002	32URB03002	M	M	ES	SI	S	1E	EMC		Y (5)	Y (6)
30PED30 AA010 Valve Motor Actuator	30PED30AA010	33UQB02001	M	M	ES	SI	S	1E	EMC		Y (5)	Y (6)
30PEB10AA004 Valve Motor Actuator	30PEB10AA004	31UQB2001	M	M	ES	SI	S	1E	EMC		Y (5)	Y (6)

Table 3.11-1—List of Environmentally Qualified Electrical/I&C Equipment (Sheet 55 of 130)

Name Tag (Equipment Description)	Tag Number	Local Area KKS ID (Room Location)	EQ Environment (Note 1)	Radiation Environment Zone (Note 2)	EQ Designated Function (Note 3)		Safety Class (Note 4)			EQ Program Designation (Note 5)		
30PEB20AA004 Valve Motor Actuator	30PEB20AA004	32UQB2001	M	M	ES	SI	S	1E	EMC		Y (5)	Y (6)
30PEB30AA004 Valve Motor Actuator	30PEB30AA004	33UQB2001	M	M	ES	SI	S	1E	EMC		Y (5)	Y (6)
30PEB40AA004 Valve Motor Actuator	30PEB40AA004	34UQB2001	M	M	ES	SI	S	1E	EMC		Y (5)	Y (6)
30PED30 AA011 Valve Motor Actuator	30PED30AA011	33UQB02001	M	M	ES	SI	S	1E	EMC		Y (5)	Y (6)
30PED30 AA019 Valve Motor Actuator	30PED30AA019	33UQB02001	M	M	ES	SI	S	1E	EMC		Y (5)	Y (6)
30PED30 AA021 Valve Motor Actuator	30PED30AA021	33UQB02001	M	M	ES	SI	S	1E	EMC		Y (5)	Y (6)
30PED30 AN001 Fan Motor	30PED30AN001	33URB03001	M	M	ES	SI	S	1E	EMC		Y (5)	Y (6)
30PED30 AN002 Fan Motor	30PED30AN002	33URB03002	M	M	ES	SI	S	1E	EMC		Y (5)	Y (6)
30PED40 AA010 Valve Motor Actuator	30PED40AA010	34UQB02001	M	M	ES	SI	S	1E	EMC		Y (5)	Y (6)
30PED40 AA011 Valve Motor Actuator	30PED40AA011	34UQB02001	M	M	ES	SI	S	1E	EMC		Y (5)	Y (6)
30PED40 AA019 Valve Motor Actuator	30PED40AA019	34UQB02001	M	M	ES	SI	S	1E	EMC		Y (5)	Y (6)
30PEDF40 AA021 Valve Motor Actuator	30PED40AA021	34UQB02001	M	M	ES	SI	S	1E	EMC		Y (5)	Y (6)
34PED40 AN001 Fan Motor	30PED40AN001	34URB03001	M	M	ES	SI	S	1E	EMC		Y (5)	Y (6)
34PED40 AN002 Fan Motor	30PED40AN002	34URB03002	M	M	ES	SI	S	1E	EMC		Y (5)	Y (6)
Safety Chilled Water System (SCWS)												
Motor for Valve 30QKA10AA101	30QKA10AA101	31UJK26029	M	M	ES	SI	S	1E	EMC		Y (5)	Y (6)
Motor for Valve 30QKA10AA102	30QKA10AA102	31UJK22028	M	M	ES	SI	S	1E	EMC		Y(5)	Y (6)
Motor for Valve 30QKA10AA103	30QKA10AA103	31UJK22028	M	M	ES	SI	S	1E	EMC		Y(5)	Y (6)
Motor for Pump #1 30QKA10AP107	30QKA10AP107	31UJK22028	M	M	ES	SI	S	1E	EMC		Y (5)	Y (6)
Motor for Pump #2 30QKA10AP108	30QKA10AP108	31UJK22028	M	M	ES	SI	S	1E	EMC		Y (5)	Y (6)
Motor for Valve30QKA20AA101	30QKA20AA101	32UJH05020	M	H	ES	SI	S	1E	EMC	Y (2)	Y (5)	Y (6)
Motor for Valve 30QKA20AA102	30QKA20AA102	32UJH05020	M	H	ES	SI	S	1E	EMC	Y (2)	Y (5)	Y (6)
Motor for Valve 30QKA20AA103	30QKA20AA103	32UJH05020	M	H	ES	SI	S	1E	EMC	Y (2)	Y (5)	Y (6)
Motor for Pump #1 30QKA20AP107	30QKA20AP107	32UJH05020	M	H	ES	SI	S	1E	EMC	Y (2)	Y (5)	Y (6)
Motor for Pump #2 30QKA20AP108	30QKA20AP108	32UJH05020	M	H	ES	SI	S	1E	EMC	Y (2)	Y (5)	Y (6)
Motor for Valve 30QKA30AA101	30QKA30AA101	33UJH05020	M	H	ES	SI	S	1E	EMC	Y (2)	Y (5)	Y (6)
Motor for Valve 30QKA30AA102	30QKA30AA102	33UJH05020	M	H	ES	SI	S	1E	EMC	Y (2)	Y (5)	Y (6)
Motor for Valve 30QKA30AA103	30QKA30AA103	33UJH05020	M	H	ES	SI	S	1E	EMC	Y (2)	Y (5)	Y (6)
Motor for Pump #1 30QKA30AP107	30QKA30AP107	33UJH05020	M	H	ES	SI	S	1E	EMC	Y (2)	Y (5)	Y (6)
Motor for Pump #2 30QKA30AP108	30QKA30AP108	33UJH05020	M	H	ES	SI	S	1E	EMC	Y (2)	Y (5)	Y (6)
Motor for Valve 30QKA40AA101	30QKA40AA101	34UJK26029	M	M	ES	SI	S	1E	EMC		Y (5)	Y (6)
Motor For Valve 30QKA40AA102	30QKA40AA102	34UJK22028	M	M	ES	SI	S	1E	EMC		Y (5)	Y (6)
Motor For Valve 30QKA40AA103	30QKA40AA103	34UJK22028	M	M	ES	SI	S	1E	EMC		Y (5)	Y (6)

Table 3.11-1—List of Environmentally Qualified Electrical/I&C Equipment (Sheet 56 of 130)

Name Tag (Equipment Description)	Tag Number	Local Area KKS ID (Room Location)	EQ Environment (Note 1)	Radiation Environment Zone (Note 2)	EQ Designated Function (Note 3)		Safety Class (Note 4)			EQ Program Designation (Note 5)		
Motor for Pump #1 30QKA40AP107	30QKA40AP107	34UJK22028	M	M	ES	SI	S	1E	EMC		Y (5)	Y (6)
Motor for Pump #2 30QKA40AP108	30QKA40AP108	34UJK22028	M	M	ES	SI	S	1E	EMC		Y (5)	Y (6)
Motor for Valve 30QKB10AA101	30QKB10AA101	32UJK31033	M	M	ES	SI	S	1E	EMC		Y (5)	Y (6)
Motor for Valve 30QKB20AA101	30QKB20AA101	32UJK31035	M	M	ES	SI	S	1E	EMC		Y (5)	Y (6)
Motor for Valve 30QKB30AA101	30QKB30AA101	33UJK31035	M	M	ES	SI	S	1E	EMC		Y (5)	Y (6)
Motor for Valve 30QKB40AA101	30QKB40AA101	32UJK31033	M	M	ES	SI	S	1E	EMC		Y (5)	Y (6)
Motor for Valve 30QKC10AA025	30QKC10AA025	31UJH01001	M	H	ES	SI	S	1E	EMC	Y (2)	Y (5)	Y (6)
Motor for Valve 30QKC10AA101	30QKC10AA101	31UJK26029	M	M	ES	SI	S	1E	EMC		Y (5)	Y (6)
Motor for Valve 30QKC20AA101	30QKC20AA101	32UJK31018	M	M	ES	SI	S	1E	EMC		Y (5)	Y (6)
Motor for Valve 30QKC30AA101	30QKC30AA101	33UJK31018	M	M	ES	SI	S	1E	EMC		Y (5)	Y (6)
Motor for Valve 30QKC40AA025	30QKC40AA025	34UJH01001	M	H	ES	SI	S	1E	EMC	Y (2)	Y (5)	Y (6)
Motor for Valve 30QKC40AA101	30QKC40AA101	34UJK26028	M	M	ES	SI	S	1E	EMC		Y (5)	Y (6)
QK10AA101 Position Meas, Div 1	30QKA10CG101	31UJK26029	M	M	ES	SI	S	1E	EMC		Y (5)	Y (6)
QK Pump #1 Level Meas, Div 1	30QKA10CL501	31UJK22028	M	M	ES	SI	S	1E	EMC		Y (5)	Y (6)
QK Tank Humidity Meas, Div 1	30QKA10CM001	31UJK26029	M	M	ES	SI	S	1E	EMC		Y (5)	Y (6)
QK System Press Meas #1, Div 1	30QKA10CP001	31UJK26029	M	M	ES	SI	S	1E	EMC		Y (5)	Y (6)
QK System Press Meas #2, Div 1	30QKA10CP002	31UJK26029	M	M	ES	SI	S	1E	EMC		Y (5)	Y (6)
QK Chiller DP Press Meas, Div 1	30QKA10CP008	31UJK22028	M	M	ES	SI	S	1E	EMC		Y (5)	Y (6)
QK System Press Meas #3, Div 1	30QKA10CP501	31UJK26029	M	M	ES	SI	S	1E	EMC		Y (5)	Y (6)
QK Tank Nitrogen Press Meas, Div 1	30QKA10CP502	31UJK26029	M	M	ES	SI	S	1E	EMC		Y (5)	Y (6)
QK Pump #1 Suct Press Meas, Div 1	30QKA10CP505	31UJK22028	M	M	ES	SI	S	1E	EMC		Y (5)	Y (6)
QK Pump #1 Disch Press Meas, Div 1	30QKA10CP506	31UJK22028	M	M	ES	SI	S	1E	EMC		Y (5)	Y (6)
QKA10AA005 Upstrm Press Meas, Div 1	30QKA10CP507	31UJK22028	M	M	ES	SI	S	1E	EMC		Y (5)	Y (6)
QKA10AA005 Dnstrm Press Meas, Div 1	30QKA10CP508	31UJK22028	M	M	ES	SI	S	1E	EMC		Y (5)	Y (6)
QKA10AA008 Upstrm Press Meas, Div 1	30QKA10CP511	31UJK26029	M	M	ES	SI	S	1E	EMC		Y (5)	Y (6)
QKA10AA008 Dnstrm Press Meas, Div 1	30QKA10CP512	31UJK26029	M	M	ES	SI	S	1E	EMC		Y (5)	Y (6)
QKA10AT001 Upstrm Press Meas, Div 1	30QKA10CP513	31UJK26029	M	M	ES	SI	S	1E	EMC		Y (5)	Y (6)
QK Pump Temp Meas #1, Div 1	30QKA10CT001	31UJK22028	M	M	ES	SI	S	1E	EMC		Y (5)	Y (6)
QK Pump Temp Meas #2, Div 1	30QKA10CT002	31UJK22028	M	M	ES	SI	S	1E	EMC		Y (5)	Y (6)
QK Pump #1 Temp Meas #3, Div 1	30QKA10CT003	31UJK22028	M	M	ES	SI	S	1E	EMC		Y (5)	Y (6)
QK Pmp #1 Motor Temp Meas #1, Div 1	30QKA10CT051	31UJK22028	M	M	ES	SI	S	1E	EMC		Y (5)	Y (6)
QK Pmp #1 Motor Temp Meas #2, Div 1	30QKA10CT052	31UJK22028	M	M	ES	SI	S	1E	EMC		Y (5)	Y (6)
QK Pmp Motor Temp Meas #3, Div 1	30QKA10CT061	31UJK22028	M	M	ES	SI	S	1E	EMC		Y (5)	Y (6)

Table 3.11-1—List of Environmentally Qualified Electrical/I&C Equipment (Sheet 57 of 130)

Name Tag (Equipment Description)	Tag Number	Local Area KKS ID (Room Location)	EQ Environment (Note 1)	Radiation Environment Zone (Note 2)	EQ Designated Function (Note 3)		Safety Class (Note 4)			EQ Program Designation (Note 5)		
QK Pmp Motor Temp Meas #4, Div 1	30QKA10CT062	31UJK22028	M	M	ES	SI	S	1E	EMC		Y (5)	Y (6)
QK Pmp Motor Temp Meas #5, Div 1	30QKA10CT063	31UJK22028	M	M	ES	SI	S	1E	EMC		Y (5)	Y (6)
QKA20AA101 Position Meas, Div 2	30QKA20CG101	32UJH05020	M	H	ES	SI	S	1E	EMC	Y (2)	Y (5)	Y (6)
QK Pmp #1 Level Meas, Div 2	30QKA20CL501	32UJH05020	M	H	ES	SI	S	1E	EMC	Y (2)	Y (5)	Y (6)
QK Tank Humidity Meas, Div 2	30QKA20CM001	32UJH05020	M	H	ES	SI	S	1E	EMC	Y (2)	Y (5)	Y (6)
QK Tank Press Meas #1, Div 2	30QKA20CP001	32UJH05020	M	H	ES	SI	S	1E	EMC	Y (2)	Y (5)	Y (6)
QK Tank Press Meas #2, Div 2	30QKA20CP002	32UJH05020	M	H	ES	SI	S	1E	EMC	Y (2)	Y (5)	Y (6)
QK Chiller DP Press Meas, Div 2	30QKA20CP008	32UJH10020	M	H	ES	SI	S	1E	EMC	Y (2)	Y (5)	Y (6)
QK Tank Press Meas #3, Div 2	30QKA20CP501	32UJH05020	M	H	ES	SI	S	1E	EMC	Y (2)	Y (5)	Y (6)
QK Tank Nitrogen Press Meas, Div 2	30QKA20CP502	32UJH05020	M	H	ES	SI	S	1E	EMC	Y (2)	Y (5)	Y (6)
QK Pmp #1 Suct Press Meas, Div 2	30QKA20CP505	32UJH05020	M	H	ES	SI	S	1E	EMC	Y (2)	Y (5)	Y (6)
QK Pmp #1 Disch Press Meas, Div 2	30QKA20CP506	32UJH05020	M	H	ES	SI	S	1E	EMC	Y (2)	Y (5)	Y (6)
QKA20AA005 Upstrm Press Meas, Div 2	30QKA20CP507	32UJH10020	M	H	ES	SI	S	1E	EMC	Y (2)	Y (5)	Y (6)
QKA20AA005 Dnstrm Press Meas, Div 2	30QKA20CP508	32UJH10020	M	H	ES	SI	S	1E	EMC	Y (2)	Y (5)	Y (6)
QKA20AA008 Upstrm Press Meas, Div 2	30QKA20CP511	32UJH05020	M	H	ES	SI	S	1E	EMC	Y (2)	Y (5)	Y (6)
QKA20AA008 Dnstrm Press Meas, Div 2	30QKA20CP512	32UJH05020	M	H	ES	SI	S	1E	EMC	Y (2)	Y (5)	Y (6)
QKA20AT001 Upstrm Press Meas, Div 2	30QKA20CP513	32UJH05020	M	H	ES	SI	S	1E	EMC	Y (2)	Y (5)	Y (6)
QKA20AT001 Dnstrm Press Meas, Div 2	30QKA20CP514	32UJH05020	M	H	ES	SI	S	1E	EMC	Y (2)	Y (5)	Y (6)
QK Pmp #1 Temp Meas #1, Div 2	30QKA20CT001	32UJH05020	M	H	ES	SI	S	1E	EMC	Y (2)	Y (5)	Y (6)
QK Pmp #1 Temp Meas #2, Div 2	30QKA20CT002	32UJH05020	M	H	ES	SI	S	1E	EMC	Y (2)	Y (5)	Y (6)
QK Pmp #1 Temp Meas #3, Div 2	30QKA20CT003	32UJH05020	M	H	ES	SI	S	1E	EMC	Y (2)	Y (5)	Y (6)
QK Pmp #1 Motor Temp Meas #1, Div 2	30QKA20CT051	32UJH05020	M	H	ES	SI	S	1E	EMC	Y (2)	Y (5)	Y (6)
QK Pmp #1 Motor Temp Meas #2, Div 2	30QKA20CT052	32UJH05020	M	H	ES	SI	S	1E	EMC	Y (2)	Y (5)	Y (6)
QK Pmp #1 Motor Temp Meas #3, Div 2	30QKA20CT061	32UJH05020	M	H	ES	SI	S	1E	EMC	Y (2)	Y (5)	Y (6)
QK Pmp #1 Motor Temp Meas #4, Div 2	30QKA20CT062	32UJH05020	M	H	ES	SI	S	1E	EMC	Y (2)	Y (5)	Y (6)
QK Pmp #1 Motor Temp Meas #5, Div 2	30QKA20CT063	32UJH05020	M	H	ES	SI	S	1E	EMC	Y (2)	Y (5)	Y (6)
QKA30AA101 Position Meas, Div 3	30QKA30CG101	33UJH05020	M	H	ES	SI	S	1E	EMC	Y (2)	Y (5)	Y (6)
QK Pump #1 Level Meas, Div 3	30QKA30CL501	33UJH05020	M	H	ES	SI	S	1E	EMC	Y (2)	Y (5)	Y (6)
QK Tank Humidity Meas, Div 3	30QKA30CM001	33UJH05020	M	H	ES	SI	S	1E	EMC	Y (2)	Y (5)	Y (6)
QK Tank Press Meas #1, Div 3	30QKA30CP001	33UJH05020	M	H	ES	SI	S	1E	EMC	Y (2)	Y (5)	Y (6)
QK Tank Press Meas #2, Div 3	30QKA30CP002	33UJH05020	M	H	ES	SI	S	1E	EMC	Y (2)	Y (5)	Y (6)
QK Chiller DP Press Meas, Div 3	30QKA30CP008	33UJH10020	M	H	ES	SI	S	1E	EMC	Y (2)	Y (5)	Y (6)
QK Tank Press Meas #3, Div 3	30QKA30CP501	33UJH05020	M	H	ES	SI	S	1E	EMC	Y (2)	Y (5)	Y (6)

Table 3.11-1—List of Environmentally Qualified Electrical/I&C Equipment (Sheet 58 of 130)

Name Tag (Equipment Description)	Tag Number	Local Area KKS ID (Room Location)	EQ Environment (Note 1)	Radiation Environment Zone (Note 2)	EQ Designated Function (Note 3)		Safety Class (Note 4)			EQ Program Designation (Note 5)		
QK Tank Nitrogen Press Meas, Div 3	30QKA30CP502	33UJH05020	M	H	ES	SI	S	1E	EMC	Y (2)	Y (5)	Y (6)
QK Pump #1 Suct Press Meas, Div 3	30QKA30CP505	33UJH05020	M	H	ES	SI	S	1E	EMC	Y (2)	Y (5)	Y (6)
QK Pump #1 Disch Press Meas, Div 3	30QKA30CP506	33UJH05020	M	H	ES	SI	S	1E	EMC	Y (2)	Y (5)	Y (6)
QKA30AA005 Upstrm Press Meas, Div 3	30QKA30CP507	33UJH05020	M	H	ES	SI	S	1E	EMC	Y (2)	Y (5)	Y (6)
QKA30AA005 Dnstrm Press Meas, Div 3	30QKA30CP508	33UJH10020	M	H	ES	SI	S	1E	EMC	Y (2)	Y (5)	Y (6)
QKA30AA008 Upstrm Press Meas, Div 3	30QKA30CP511	33UJH05020	M	H	ES	SI	S	1E	EMC	Y (2)	Y (5)	Y (6)
QKA30AA008 Dnstrm Press Meas, Div 3	30QKA30CP512	33UJH05020	M	H	ES	SI	S	1E	EMC	Y (2)	Y (5)	Y (6)
QKA30AT001 Upstrm Press Meas, Div 3	30QKA30CP513	33UJH05020	M	H	ES	SI	S	1E	EMC	Y (2)	Y (5)	Y (6)
QKA30AT001 Dnstrm Press Meas, Div 3	30QKA30CP514	33UJH05020	M	H	ES	SI	S	1E	EMC	Y (2)	Y (5)	Y (6)
QK Pump #1 Temp Meas #1, Div 3	30QKA30CT001	33UJH05020	M	H	ES	SI	S	1E	EMC	Y (2)	Y (5)	Y (6)
QK Pump #1 Temp Meas #2, Div 3	30QKA30CT002	33UJH05020	M	H	ES	SI	S	1E	EMC	Y (2)	Y (5)	Y (6)
QK Pump #1 Temp Meas #3, Div 3	30QKA30CT003	33UJH05020	M	H	ES	SI	S	1E	EMC	Y (2)	Y (5)	Y (6)
QK Pmp #1 Motor Temp Meas #1, Div 3	30QKA30CT051	33UJH05020	M	H	ES	SI	S	1E	EMC	Y (2)	Y (5)	Y (6)
QK Pmp #1 Motor Temp Meas #2, Div 3	30QKA30CT052	33UJH05020	M	H	ES	SI	S	1E	EMC	Y (2)	Y (5)	Y (6)
QK Pmp #1 Motor Temp Meas #3, Div 3	30QKA30CT061	33UJH05020	M	H	ES	SI	S	1E	EMC	Y (2)	Y (5)	Y (6)
QK Pmp #1 Motor Temp Meas #4, Div 3	30QKA30CT062	33UJH05020	M	H	ES	SI	S	1E	EMC	Y (2)	Y (5)	Y (6)
QK Pmp #1 Motor Temp Meas, Div 3	30QKA30CT063	33UJH05020	M	H	ES	SI	S	1E	EMC	Y (2)	Y (5)	Y (6)
QKA40AA101 Position Meas, Div 4	30QKA40CG101	34UJK26029	M	M	ES	SI	S	1E	EMC		Y (5)	Y (6)
QK Pump #1 Level Meas, Div 4	30QKA40CL501	34UJK22028	M	M	ES	SI	S	1E	EMC		Y (5)	Y (6)
QK Tank Humidity Meas, Div 4	30QKA40CM001	34UJK26029	M	M	ES	SI	S	1E	EMC		Y (5)	Y (6)
QK Tank Pressure Meas #1, Div 4	30QKA40CP001	34UJK26029	M	M	ES	SI	S	1E	EMC		Y (5)	Y (6)
QK Tank Press Meas #2, Div 4	30QKA40CP002	34UJK26029	M	M	ES	SI	S	1E	EMC		Y (5)	Y (6)
QK Chiller DP Press Meas, Div 4	30QKA40CP008	34UJK22028	M	M	ES	SI	S	1E	EMC		Y (5)	Y (6)
QK Tank Press Meas #3, Div 4	30QKA40CP501	34UJK26029	M	M	ES	SI	S	1E	EMC		Y (5)	Y (6)
QK Tank Nitrogen Press Meas, Div 4	30QKA40CP502	34UJK26029	M	M	ES	SI	S	1E	EMC		Y (5)	Y (6)
QK Pmp #1 Suct Press Meas, Div 4	30QKA40CP505	34UJK22028	M	M	ES	SI	S	1E	EMC		Y (5)	Y (6)
QK Pmp #1 Disch Press Meas, Div 4	30QKA40CP506	34UJK22028	M	M	ES	SI	S	1E	EMC		Y (5)	Y (6)
QKA40AA005 Upstrm Press Meas, Div 4	30QKA40CP507	34UJK22028	M	M	ES	SI	S	1E	EMC		Y (5)	Y (6)
QKA40AA005 Dnstrm Press Meas, Div 4	30QKA40CP508	34UJK22028	M	M	ES	SI	S	1E	EMC		Y (5)	Y (6)
QKA40AA008 Upstrm Press Meas, Div 4	30QKA40CP511	34UJK26029	M	M	ES	SI	S	1E	EMC		Y (5)	Y (6)
QKA40AA008 Dnstrm Press Meas, Div 4	30QKA40CP512	34UJK26029	M	M	ES	SI	S	1E	EMC		Y (5)	Y (6)
QKA40AT001 Upstrm Press Meas, Div 4	30QKA40CP513	34UJK26029	M	M	ES	SI	S	1E	EMC		Y (5)	Y (6)
QKA40AT001 Dnstrm Press Meas, Div 4	30QKA40CP514	34UJK26029	M	M	ES	SI	S	1E	EMC		Y (5)	Y (6)

Table 3.11-1—List of Environmentally Qualified Electrical/I&C Equipment (Sheet 59 of 130)

Name Tag (Equipment Description)	Tag Number	Local Area KKS ID (Room Location)	EQ Environment (Note 1)	Radiation Environment Zone (Note 2)	EQ Designated Function (Note 3)	Safety Class (Note 4)	EQ Program Designation (Note 5)
QK Pump #1 Temp Meas #1, Div 4	30QKA40CT001	34UJK22028	M	M	ES SI	S 1E EMC	Y (5) Y (6)
QK Pump #1 Temp Meas #2, Div 4	30QKA40CT002	34UJK22028	M	M	ES SI	S 1E EMC	Y (5) Y (6)
QK Pump #1 Temp Meas #3, Div 4	30QKA40CT003	34UJK22028	M	M	ES SI	S 1E EMC	Y (5) Y (6)
QK Pmp #1 Motor Temp Meas #1, Div 4	30QKA40CT051	34UJK22028	M	M	ES SI	S 1E EMC	Y (5) Y (6)
QK Pmp #1 Motor Temp Meas #2, Div 4	30QKA40CT052	34UJK22028	M	M	ES SI	S 1E EMC	Y (5) Y (6)
QK Pmp #1 Motor Temp Meas #3, Div 4	30QKA40CT061	34UJK22028	M	M	ES SI	S 1E EMC	Y (5) Y (6)
QK Pmp #1 Motor Temp Meas #4, Div 4	30QKA40CT062	34UJK22028	M	M	ES SI	S 1E EMC	Y (5) Y (6)
QK Pmp #1 Motor Temp Meas #5, Div 4	30QKA40CT063	34UJK22028	M	M	ES SI	S 1E EMC	Y (5) Y (6)
QKB10AA101 Pos Meas, Div 1	30QKB10CG101	32UJK31034	M	M	ES SI	S 1E EMC	Y (5) Y (6)
SAB01AC001 Upstrm Press Meas, Div 1	30QKB10CP501	32UJK31034	M	M	ES SI	S 1E EMC	Y (5) Y (6)
QKB10AA002 Upstrm Press Meas, Div 1	30QKB10CP502	32UJK31034	M	M	ES SI	S 1E EMC	Y (5) Y (6)
QKB10AA002 Dnstrm Press Meas, Div 1	30QKB10CP503	32UJK31034	M	M	ES SI	S 1E EMC	Y (5) Y (6)
QKB10AT001 Upstrm Press Meas, Div 1	30QKB10CP504	32UJK31034	M	M	ES SI	S 1E EMC	Y (5) Y (6)
QKB10AT001 Dnstrm Press Meas, Div 1	30QKB10CP505	32UJK31034	M	M	ES SI	S 1E EMC	Y (5) Y (6)
SAB01AC001 Upstrm Temp Meas, Div 1	30QKB10CT501	32UJK31034	M	M	ES SI	S 1E EMC	Y (5) Y (6)
SAB01AC001 Dnstrm Temp Meas, Div 1	30QKB10CT502	32UJK31034	M	M	ES SI	S 1E EMC	Y (5) Y (6)
QKB20AA101 Position Meas, Div 2	30QKB20CG101	32UJK31035	M	M	ES SI	S 1E EMC	Y (5) Y (6)
SAB02AC001 Upstrm Press Meas, Div 2	30QKB20CP501	32UJK31035	M	M	ES SI	S 1E EMC	Y (5) Y (6)
QKB20AA002 Upstrm Press Meas, Div 2	30QKB20CP502	32UJK31035	M	M	ES SI	S 1E EMC	Y (5) Y (6)
QKB20AA002 Dnstrm Press Meas, Div 2	30QKB20CP503	32UJK31035	M	M	ES SI	S 1E EMC	Y (5) Y (6)
QKB20AT001 Upstrm Press Meas, Div 2	30QKB20CP504	32UJK31035	M	M	ES SI	S 1E EMC	Y (5) Y (6)
QKB20AT001 Dnstrm Press Meas, Div 2	30QKB20CP505	32UJK31035	M	M	ES SI	S 1E EMC	Y (5) Y (6)
SAB02AC001 Upstrm Temp Meas, Div 2	30QKB20CT501	32UJK31035	M	M	ES SI	S 1E EMC	Y (5) Y (6)
SAB02AC001 Dnstrm Temp Meas, Div 2	30QKB20CT502	32UJK31035	M	M	ES SI	S 1E EMC	Y (5) Y (6)
QKB30AA101 Position Meas, Div 3	30QKB30CG101	33UJK31035	M	M	ES SI	S 1E EMC	Y (5) Y (6)
SAB03AC001 Upstrm Press Meas, Div 3	30QKB30CP501	33UJK31035	M	M	ES SI	S 1E EMC	Y (5) Y (6)
QKB30AA002 Upstrm Press Meas, Div 3	30QKB30CP502	33UJK31035	M	M	ES SI	S 1E EMC	Y (5) Y (6)
QKB30AA002 Dnstrm Press Meas, Div 3	30QKB30CP503	33UJK31035	M	M	ES SI	S 1E EMC	Y (5) Y (6)
QKB30AT001 Upstrm Press Meas, Div 3	30QKB30CP504	33UJK31035	M	M	ES SI	S 1E EMC	Y (5) Y (6)
QKB30AT001 Dnstrm Press Meas, Div 3	30QKB30CP505	33UJK31035	M	M	ES SI	S 1E EMC	Y (5) Y (6)
SAB03AC001 Upstrm Temp Meas, Div 3	30QKB30CT501	33UJK31035	M	M	ES SI	S 1E EMC	Y (5) Y (6)
SAB03AC001 Dnstrm Temp Meas, Div 3	30QKB30CT502	33UJK31035	M	M	ES SI	S 1E EMC	Y (5) Y (6)
QKB40AA101 Position Meas, Div 4	30QKB40CG101	33UJK31034	M	M	ES SI	S 1E EMC	Y (5) Y (6)

Table 3.11-1—List of Environmentally Qualified Electrical/I&C Equipment (Sheet 60 of 130)

Name Tag (Equipment Description)	Tag Number	Local Area KKS ID (Room Location)	EQ Environment (Note 1)	Radiation Environment Zone (Note 2)	EQ Designated Function (Note 3)		Safety Class (Note 4)			EQ Program Designation (Note 5)		
SAB04AC001 Upstrm Press Meas, Div 4	30QKB40CP501	33UJK31034	M	M	ES	SI	S	1E	EMC		Y (5)	Y (6)
QKB40AA002 Upstrm Press Meas, Div 4	30QKB40CP502	33UJK31034	M	M	ES	SI	S	1E	EMC		Y (5)	Y (6)
QKB40AA002 Dnstrm Press Meas, Div 4	30QKB40CP503	33UJK31034	M	M	ES	SI	S	1E	EMC		Y (5)	Y (6)
QKB40AT001 Upstrm Press Meas, Div 4	30QKB40CP504	33UJK31034	M	M	ES	SI	S	1E	EMC		Y (5)	Y (6)
QKB40AT001 Dnstrm Press Meas, Div 4	30QKB40CP505	33UJK31034	M	M	ES	SI	S	1E	EMC		Y (5)	Y (6)
SAB04AC001 Upstrm Temp Meas, Div 4	30QKB40CT501	33UJK31034	M	M	ES	SI	S	1E	EMC		Y (5)	Y (6)
SAB04AC001 Dnstrm Temp Meas, Div 4	30QKB40CT502	33UJK31034	M	M	ES	SI	S	1E	EMC		Y (5)	Y (6)
QKC10AA101 Pos Meas, Div 1	30QKC10CG101	31UJK26029	M	M	ES	SI	S	1E	EMC		Y (5)	Y (6)
SAC01AC001 Upstrm Press Meas, Div 1	30QKC10CP501	31UJK22028	M	M	ES	SI	S	1E	EMC		Y (5)	Y (6)
QKC10AA002 Upstrm Press Meas, Div 1	30QKC10CP502	31UJK26029	M	M	ES	SI	S	1E	EMC		Y (5)	Y (6)
QKC10AA002 Dnstrm Press Meas, Div 1	30QKC10CP503	31UJK26029	M	M	ES	SI	S	1E	EMC		Y (5)	Y (6)
SAC61AC001 Upstrm Press Meas, Div 1	30QKC10CP504	31UJH01024	M	H	ES	SI	S	1E	EMC	Y (2)	Y (5)	Y (6)
QKC10AA005 Upstrm Press Meas, Div 1	30QKC10CP505	31UJH01024	M	H	ES	SI	S	1E	EMC	Y (2)	Y (5)	Y (6)
QKC10AA005 Dnstrm Press Meas, Div 1	30QKC10CP506	31UJH01024	M	H	ES	SI	S	1E	EMC	Y (2)	Y (5)	Y (6)
SAC61AC002 Upstrm Press Meas, Div 1	30QKC10CP508	31UJH01026	M	H	ES	SI	S	1E	EMC	Y (2)	Y (5)	Y (6)
QKC10AA009 Upstrm Press Meas, Div 1	30QKC10CP509	31UJH01026	M	H	ES	SI	S	1E	EMC	Y (2)	Y (5)	Y (6)
QKC10AA009 Dnstrm Press Meas, Div 1	30QKC10CP510	31UJH01026	M	H	ES	SI	S	1E	EMC	Y (2)	Y (5)	Y (6)
KLC51AC001 Upstrm Press Meas, Div 1	30QKC10CP511	31UJH10001	M	H	ES	SI	S	1E	EMC	Y (2)	Y (5)	Y (6)
QKC10AA012 Upstrm Press Meas, Div 1	30QKC10CP512	31UJH10002	M	H	ES	SI	S	1E	EMC	Y (2)	Y (5)	Y (6)
QKC10AA012 Dnstrm Press Meas, Div 1	30QKC10CP513	31UJH10002	M	H	ES	SI	S	1E	EMC	Y (2)	Y (5)	Y (6)
QKA10AT001 Dnstrm Press Meas,Div 1	30QKC10CP514	31UJK26029	M	M	ES	SI	S	1E	EMC		Y (5)	Y (6)
QKC10AT001 Upstrm Press Meas, Div 1	30QKC10CP519	31UJK26029	M	M	ES	SI	S	1E	EMC		Y (5)	Y (6)
QKC10AT001 Dnstrm Press Meas, Div 1	30QKC10CP520	31UJK26029	M	M	ES	SI	S	1E	EMC		Y (5)	Y (6)
KLC51AC003 Upstrm Press Meas, Div 1	30QKC10CP521	31UJH10010	M	H	ES	SI	S	1E	EMC	Y (2)	Y (5)	Y (6)
QKC10AA015 Upstrm Press Meas, Div 1	30QKC10CP522	31UJH10010	M	H	ES	SI	S	1E	EMC	Y (2)	Y (5)	Y (6)
QKC10AA015 Dnstrm Press Meas, Div 1	30QKC10CP523	31UJH10010	M	H	ES	SI	S	1E	EMC	Y (2)	Y (5)	Y (6)
KLC51AC002 Upstrm Press Meas, Div 1	30QKC10CP524	31UJH10001	M	H	ES	SI	S	1E	EMC	Y (2)	Y (5)	Y (6)
QKC10AA018 Upstrm Press Meas, Div 1	30QKC10CP525	31UJH10002	M	H	ES	SI	S	1E	EMC	Y (2)	Y (5)	Y (6)
QKC10AA018 Dnstrm Press Meas, Div 1	30QKC10CP526	31UJH10002	M	H	ES	SI	S	1E	EMC	Y (2)	Y (5)	Y (6)
QKC10AA022 Dnstrm Press Meas, Div 1	30QKC10CP527	31UJH01001	M	H	ES	SI	S	1E	EMC	Y (2)	Y (5)	Y (6)
QKC10AA022 Upstrm Press Meas, Div 1	30QKC10CP528	31UJH01001	M	H	ES	SI	S	1E	EMC	Y (2)	Y (5)	Y (6)
JNG10AP001 Upstrm Press Meas, Div 1	30QKC10CP529	31UJH01001	M	H	ES	SI	S	1E	EMC	Y (2)	Y (5)	Y (6)
SAC01AC001 Upstrm Temp Meas, Div 1	30QKC10CT501	31UJK22028	M	M	ES	SI	S	1E	EMC		Y (5)	Y (6)

Table 3.11-1—List of Environmentally Qualified Electrical/I&C Equipment (Sheet 61 of 130)

Name Tag (Equipment Description)	Tag Number	Local Area KKS ID (Room Location)	EQ Environment (Note 1)	Radiation Environment Zone (Note 2)	EQ Designated Function (Note 3)		Safety Class (Note 4)			EQ Program Designation (Note 5)		
QKC10AT001 Dnstrm Temp Meas, Div 1	30QKC10CT502	31UJK22028	M	M	ES	SI	S	1E	EMC		Y (5)	Y (6)
SAC61AC001 Upstrm Temp Meas, Div 1	30QKC10CT503	31UJH01024	M	H	ES	SI	S	1E	EMC	Y (2)	Y (5)	Y (6)
SAC61AC001 Dnstrm Temp Meas, Div 1	30QKC10CT504	31UJH01024	M	H	ES	SI	S	1E	EMC	Y (2)	Y (5)	Y (6)
SAC61AC002 Upstrm Temp Meas, Div 1	30QKC10CT506	31UJH01026	M	H	ES	SI	S	1E	EMC	Y (2)	Y (5)	Y (6)
SAC61AC002 Dnstrm Temp Meas, Div 1	30QKC10CT507	31UJH01026	M	H	ES	SI	S	1E	EMC	Y (2)	Y (5)	Y (6)
KLC51AC001 Upstrm Temp Meas, Div 1	30QKC10CT508	31UJH10002	M	H	ES	SI	S	1E	EMC	Y (2)	Y (5)	Y (6)
KLC51AC001 Dnstrm Temp Meas, Div 1	30QKC10CT509	31UJH10002	M	H	ES	SI	S	1E	EMC	Y (2)	Y (5)	Y (6)
KLC51AC003 Dnstrm Temp Meas, Div 1	30QKC10CT510	31UJH10010	M	H	ES	SI	S	1E	EMC	Y (2)	Y (5)	Y (6)
KLC51AC002 Dnstrm Temp Meas, Div 1	30QKC10CT511	31UJH10002	M	H	ES	SI	S	1E	EMC	Y (2)	Y (5)	Y (6)
KLC51AC003 Upstrm Temp Meas, Div 1	30QKC10CT512	31UJH10010	M	H	ES	SI	S	1E	EMC	Y (2)	Y (5)	Y (6)
JNG10AP001 Dnstrm Temp Meas, Div 1	30QKC10CT513	31UJH01001	M	H	ES	SI	S	1E	EMC	Y (2)	Y (5)	Y (6)
JNG10AP001 Upstrm Temp Meas, Div 1	30QKC10CT514	31UJH01001	M	H	ES	SI	S	1E	EMC	Y (2)	Y (5)	Y (6)
KLC51AC002 Upstrm Temp Meas, Div 1	30QKC10CT524	31UJH10002	M	H	ES	SI	S	1E	EMC	Y (2)	Y (5)	Y (6)
QKC20AA101 Position Meas, Div 2	30QKC20CG101	32UJK31018	M	M	ES	SI	S	1E	EMC		Y (5)	Y (6)
SAC02AC001 Upstrm Press Meas, Div 2	30QKC20CP501	32UJK31018	M	M	ES	SI	S	1E	EMC		Y (5)	Y (6)
QKC20AA002 Upstrm Press Meas, Div 2	30QKC20CP502	32UJK31018	M	M	ES	SI	S	1E	EMC		Y (5)	Y (6)
QKC20AA002 Dnstrm Press Meas, Div 2	30QKC20CP503	32UJK31018	M	M	ES	SI	S	1E	EMC		Y (5)	Y (6)
SAC62AC001 Upstrm Press Meas, Div 2	30QKC20CP504	32UJH01024	M	H	ES	SI	S	1E	EMC	Y (2)	Y (5)	Y (6)
QKC20AA005 Upstrm Press Meas, Div 2	30QKC20CP505	32UJH01024	M	H	ES	SI	S	1E	EMC	Y (2)	Y (5)	Y (6)
QKC20AA05 Dnstrm Press Meas, Div 2	30QKC20CP506	32UJH01024	M	H	ES	SI	S	1E	EMC	Y (2)	Y (5)	Y (6)
SAC62AC002 Upstrm Press Meas, Div 2	30QKC20CP508	32UJH05002	M	H	ES	SI	S	1E	EMC	Y (2)	Y (5)	Y (6)
QKC20AA009 Upstrm Press Meas, Div 2	30QKC20CP509	32UJH05020	M	H	ES	SI	S	1E	EMC	Y (2)	Y (5)	Y (6)
QKC20AA009 Dnstrm Press Meas, Div 2	30QKC20CP510	32UJH05020	M	H	ES	SI	S	1E	EMC	Y (2)	Y (5)	Y (6)
KLC52AC001 Upstrm Press Meas, Div 2	30QKC20CP511	32UJH05005	M	H	ES	SI	S	1E	EMC	Y (2)	Y (5)	Y (6)
QKC20AA012 Upstrm Press Meas, Div 2	30QKC20CP512	32UJH05005	M	H	ES	SI	S	1E	EMC	Y (2)	Y (5)	Y (6)
QKC20AA012 Dnstrm Press Meas, Div 2	30QKC20CP513	32UJH05005	M	H	ES	SI	S	1E	EMC	Y (2)	Y (5)	Y (6)
QKC20AT001 Upstrm Press Meas, Div 2	30QKC20CP519	32UJK31018	M	M	ES	SI	S	1E	EMC		Y (5)	Y (6)
QKC20AT001 Dnstrm Press Meas, Div 2	30QKC20CP520	32UJK31018	M	M	ES	SI	S	1E	EMC		Y (5)	Y (6)
KLC52AC002 Upstrm Press Meas, Div 2	30QKC20CP521	32UJH10002	M	H	ES	SI	S	1E	EMC	Y (2)	Y (5)	Y (6)
QKC20AA015 Upstrm Press Meas, Div 2	30QKC20CP522	32UJH10002	M	H	ES	SI	S	1E	EMC	Y (2)	Y (5)	Y (6)
QKC20AA015 Dnstrm Press Meas, Div 2	30QKC20CP523	32UJH10002	M	H	ES	SI	S	1E	EMC	Y (2)	Y (5)	Y (6)
SAC02AC001 Upstrm Temp Meas, Div 2	30QKC20CT501	32UJK31018	M	M	ES	SI	S	1E	EMC		Y (5)	Y (6)
SAC02AC001 Dnstrm Temp Meas, Div 2	30QKC20CT502	32UJK31018	M	M	ES	SI	S	1E	EMC		Y (5)	Y (6)

Table 3.11-1—List of Environmentally Qualified Electrical/I&C Equipment (Sheet 62 of 130)

Name Tag (Equipment Description)	Tag Number	Local Area KKS ID (Room Location)	EQ Environment (Note 1)	Radiation Environment Zone (Note 2)	EQ Designated Function (Note 3)		Safety Class (Note 4)			EQ Program Designation (Note 5)		
SAC62AC001 Upstrm Temp Meas, Div 2	30QKC20CT503	32UJH01024	M	H	ES	SI	S	1E	EMC	Y (2)	Y (5)	Y (6)
SAC62AC001 Dnstrm Temp Meas, Div 2	30QKC20CT504	32UJH01024	M	H	ES	SI	S	1E	EMC	Y (2)	Y (5)	Y (6)
SAC62AC002 Upstrm Temp Meas, Div 2	30QKC20CT506	32UJH05020	M	H	ES	SI	S	1E	EMC	Y (2)	Y (5)	Y (6)
SAC62AC002 Dnstrm Temp Meas, Div 2	30QKC20CT507	32UJH05020	M	H	ES	SI	S	1E	EMC	Y (2)	Y (5)	Y (6)
KLC52AC001 Upstrm Temp Meas, Div 2	30QKC20CT508	32UJH05005	M	H	ES	SI	S	1E	EMC	Y (2)	Y (5)	Y (6)
KLC52AC001 Dnstrm Temp Meas, Div 2	30QKC20CT509	32UJH05005	M	H	ES	SI	S	1E	EMC	Y (2)	Y (5)	Y (6)
KLC52AC002 Upstrm Temp Meas, Div 2	30QKC20CT510	32UJH10002	M	H	ES	SI	S	1E	EMC	Y (2)	Y (5)	Y (6)
KLC52AC002 Dnstrm Temp Meas, Div 2	30QKC20CT511	32UJH10002	M	H	ES	SI	S	1E	EMC	Y (2)	Y (5)	Y (6)
QKC30AA101 Position Meas, Div 3	30QKC30CG101	33UJK31018	M	M	ES	SI	S	1E	EMC		Y (5)	Y (6)
SAC03AC001 Upstrm Press Meas, Div 3	30QKC30CP501	33UJK31018	M	M	ES	SI	S	1E	EMC		Y (5)	Y (6)
QKC30AA002 Upstrm Press Meas, Div 3	30QKC30CP502	33UJK31018	M	M	ES	SI	S	1E	EMC		Y (5)	Y (6)
QKC30AA002 Dnstrm Press Meas, Div 3	30QKC30CP503	33UJK31018	M	M	ES	SI	S	1E	EMC		Y (5)	Y (6)
SAC63AC001 Upstrm Press Meas, Div 3	30QKC30CP504	33UJH01024	M	H	ES	SI	S	1E	EMC	Y (2)	Y (5)	Y (6)
QKC30AA005 Upstrm Press Meas, Div 3	30QKC30CP505	33UJH01024	M	H	ES	SI	S	1E	EMC	Y (2)	Y (5)	Y (6)
QKC30AA005 Dnstrm Press Meas, Div 3	30QKC30CP506	33UJH01024	M	H	ES	SI	S	1E	EMC	Y (2)	Y (5)	Y (6)
SAC63AC002 Upstrm Press Meas, Div 3	30QKC30CP508	33UJH05020	M	H	ES	SI	S	1E	EMC	Y (2)	Y (5)	Y (6)
QKC30AA009 Upstrm Press Meas, Div 3	30QKC30CP509	33UJH05020	M	H	ES	SI	S	1E	EMC	Y (2)	Y (5)	Y (6)
QKC30AA009 Dnstrm Press Meas, Div 3	30QKC30CP510	33UJH05020	M	H	ES	SI	S	1E	EMC	Y (2)	Y (5)	Y (6)
KLC53AC001 Upstrm Press Meas, Div 3	30QKC30CP511	33UJH05005	M	H	ES	SI	S	1E	EMC	Y (2)	Y (5)	Y (6)
QKC30AA012 Upstrm Press Meas, Div 3	30QKC30CP512	33UJH05005	M	H	ES	SI	S	1E	EMC	Y (2)	Y (5)	Y (6)
QKC30AA012 Dnstrm Press Meas, Div 3	30QKC30CP513	33UJH05005	M	H	ES	SI	S	1E	EMC	Y (2)	Y (5)	Y (6)
QKC30AT001 Upstrm Press Meas, Div 3	30QKC30CP519	33UJK31018	M	M	ES	SI	S	1E	EMC		Y (5)	Y (6)
QKC30AT001 Dnstrm Press Meas, Div 3	30QKC30CP520	33UJK31018	M	M	ES	SI	S	1E	EMC		Y (5)	Y (6)
KLC53AC002 Upstrm Press Meas, Div 3	30QKC30CP521	33UJH10002	M	H	ES	SI	S	1E	EMC	Y (2)	Y (5)	Y (6)
QKC30AA015 Upstrm Press Meas, Div 3	30QKC30CP522	33UJH10002	M	H	ES	SI	S	1E	EMC	Y (2)	Y (5)	Y (6)
QKC30AA015 Dnstrm Press Meas, Div 3	30QKC30CP523	33UJH10002	M	H	ES	SI	S	1E	EMC	Y (2)	Y (5)	Y (6)
SAC03AC001 Upstrm Temp Meas, Div 3	30QKC30CT501	33UJK31018	M	M	ES	SI	S	1E	EMC		Y (5)	Y (6)
SAC03AC001 Temp Meas, Div 3	30QKC30CT502	33UJK31018	M	M	ES	SI	S	1E	EMC		Y (5)	Y (6)
SAC63AC001 Upstrm Temp Meas, Div 3	30QKC30CT503	33UJH01024	M	H	ES	SI	S	1E	EMC	Y (2)	Y (5)	Y (6)
SAC63AC001 Dnstrm Temp Meas, Div 3	30QKC30CT504	33UJH01024	M	H	ES	SI	S	1E	EMC	Y (2)	Y (5)	Y (6)
SAC63AC002 Upstrm Temp Meas, Div 3	30QKC30CT506	33UJH05020	M	H	ES	SI	S	1E	EMC	Y (2)	Y (5)	Y (6)
SAC63AC002 Dnstrm Temp Meas, Div 3	30QKC30CT507	33UJH05020	M	H	ES	SI	S	1E	EMC	Y (2)	Y (5)	Y (6)
KLC53AC001 Upstrm Temp Meas, Div 3	30QKC30CT508	33UJH05005	M	H	ES	SI	S	1E	EMC	Y (2)	Y (5)	Y (6)

Table 3.11-1—List of Environmentally Qualified Electrical/I&C Equipment (Sheet 63 of 130)

Name Tag (Equipment Description)	Tag Number	Local Area KKS ID (Room Location)	EQ Environment (Note 1)	Radiation Environment Zone (Note 2)	EQ Designated Function (Note 3)		Safety Class (Note 4)			EQ Program Designation (Note 5)		
KLC53AC001 Dnstrm Temp Meas, Div 3	30QKC30CT509	33UJH05005	M	H	ES	SI	S	1E	EMC	Y (2)	Y (5)	Y (6)
KLC53AC002 Upstrm Temp Meas, Div 3	30QKC30CT510	33UJH10002	M	H	ES	SI	S	1E	EMC	Y (2)	Y (5)	Y (6)
KLC53AC002 Dnstrm Temp Meas, Div 3	30QKC30CT511	33UJH10002	M	H	ES	SI	S	1E	EMC	Y (2)	Y (5)	Y (6)
QKC40AA101 Position Meas, Div 4	30QKC40CG101	34UJK26029	M	M	ES	SI	S	1E	EMC		Y (5)	Y (6)
SAC04AC001 Upstrm Press Meas, Div 4	30QKC40CP501	34UJK22028	M	M	ES	SI	S	1E	EMC		Y (5)	Y (6)
QKC40AA002 Upstrm Press Meas, Div 4	30QKC40CP502	34UJK26029	M	M	ES	SI	S	1E	EMC		Y (5)	Y (6)
QKC40AA002 Dnstrm Press Meas,Div 4	30QKC40CP503	34UJK26029	M	M	ES	SI	S	1E	EMC		Y (5)	Y (6)
SAC64AC001 Upstrm Press Meas, Div 4	30QKC40CP504	34UJH01024	M	H	ES	SI	S	1E	EMC	Y (2)	Y (5)	Y (6)
QKC40AA005 Upstrm Press Meas, Div 4	30QKC40CP505	34UJH01024	M	H	ES	SI	S	1E	EMC	Y (2)	Y (5)	Y (6)
QKC40AA005 Dnstrm Press Meas, Div 4	30QKC40CP506	34UJH01024	M	H	ES	SI	S	1E	EMC	Y (2)	Y (5)	Y (6)
SAC64AC002 Upstrm Press Meas, Div 4	30QKC40CP508	34UJH01026	M	H	ES	SI	S	1E	EMC	Y (2)	Y (5)	Y (6)
QKC40AA009 Upstrm Press Meas, Div 4	30QKC40CP509	34UJH01026	M	H	ES	SI	S	1E	EMC	Y (2)	Y (5)	Y (6)
QKC40AA009 Dnstrm Press Meas, Div 4	30QKC40CP510	34UJH01026	M	H	ES	SI	S	1E	EMC	Y (2)	Y (5)	Y (6)
KLC54AC001 Upstrm Press Meas, Div 4	30QKC40CP511	34UJH10002	M	H	ES	SI	S	1E	EMC	Y (2)	Y (5)	Y (6)
QKC40AA012 Upstrm Press Meas, Div 4	30QKC40CP512	34UJH10002	M	H	ES	SI	S	1E	EMC	Y (2)	Y (5)	Y (6)
QKC40AA012 Dnstrm Press Meas, Div 4	30QKC40CP513	34UJH10002	M	H	ES	SI	S	1E	EMC	Y (2)	Y (5)	Y (6)
QKC40AT001 Upstrm Press Meas, Div 4	30QKC40CP519	34UJK26029	M	M	ES	SI	S	1E	EMC		Y (5)	Y (6)
QKC40AT001 Dnstrm Press Meas, Div 4	30QKC40CP520	34UJK26029	M	M	ES	SI	S	1E	EMC		Y (5)	Y (6)
KLC54AC003 Upstrm Press Meas, Div 4	30QKC40CP521	34UJH10011	M	H	ES	SI	S	1E	EMC	Y (2)	Y (5)	Y (6)
QKC40AA015 Upstrm Press Meas, Div 4	30QKC40CP522	34UJH10011	M	H	ES	SI	S	1E	EMC	Y (2)	Y (5)	Y (6)
QKC40AA015 Dnstrm Press Meas, Div 4	30QKC40CP523	34UJH10011	M	H	ES	SI	S	1E	EMC	Y (2)	Y (5)	Y (6)
KLC54AC002 Upstrm Press Meas, Div 4	30QKC40CP524	34UJH10002	M	H	ES	SI	S	1E	EMC	Y (2)	Y (5)	Y (6)
QKC40AA018 Upstrm Press Meas, Div 4	30QKC40CP525	34UJH10002	M	H	ES	SI	S	1E	EMC	Y (2)	Y (5)	Y (6)
QKC40AA018 Dnstrm Press Meas, Div 4	30QKC40CP526	34UJH10002	M	H	ES	SI	S	1E	EMC	Y (2)	Y (5)	Y (6)
QKC40AA022 Dnstrm Press Meas, Div 4	30QKC40CP527	34UJH01001	M	H	ES	SI	S	1E	EMC	Y (2)	Y (5)	Y (6)
QKC40AA022 Upstrm Press Meas, Div 4	30QKC40CP528	34UJH01001	M	H	ES	SI	S	1E	EMC	Y (2)	Y (5)	Y (6)
JNG40AP001 Upstrm Press Meas, Div 4	30QKC40CP529	34UJH01001	M	H	ES	SI	S	1E	EMC	Y (2)	Y (5)	Y (6)
SAC04AC001 Upstrm Temp Meas, Div 4	30QKC40CT501	34UJK22028	M	M	ES	SI	S	1E	EMC		Y (5)	Y (6)
SAC04AC001 Dnstrm Temp Meas, Div 4	30QKC40CT502	34UJK22028	M	M	ES	SI	S	1E	EMC		Y (5)	Y (6)
SAC64AC001 Upstrm Temp Meas, Div 4	30QKC40CT503	34UJH01024	M	H	ES	SI	S	1E	EMC	Y (2)	Y (5)	Y (6)
SAC64AC001 Dnstrm Temp Meas, Div 4	30QKC40CT504	34UJH01024	M	H	ES	SI	S	1E	EMC	Y (2)	Y (5)	Y (6)
SAC64AC002 Upstrm Temp Meas, Div 4	30QKC40CT506	34UJH01026	M	H	ES	SI	S	1E	EMC	Y (2)	Y (5)	Y (6)
SAC64AC002 Dnstrm Temp Meas, Div 4	30QKC40CT507	34UJH01026	M	H	ES	SI	S	1E	EMC	Y (2)	Y (5)	Y (6)

Table 3.11-1—List of Environmentally Qualified Electrical/I&C Equipment (Sheet 64 of 130)

Name Tag (Equipment Description)	Tag Number	Local Area KKS ID (Room Location)	EQ Environment (Note 1)	Radiation Environment Zone (Note 2)	EQ Designated Function (Note 3)			Safety Class (Note 4)			EQ Program Designation (Note 5)		
KLC54AC001 Upstrm Temp Meas, Div 4	30QKC40CT508	34UJH10002	M	H	ES		SI	S	1E	EMC	Y (2)	Y (5)	Y (6)
KLC54AC001 Dnstrm Temp Meas, Div 4	30QKC40CT509	34UJH10002	M	H	ES		SI	S	1E	EMC	Y (2)	Y (5)	Y (6)
KLC54AC003 Dnstrm Temp Meas, Div 4	30QKC40CT510	34UJH10011	M	H	ES		SI	S	1E	EMC	Y (2)	Y (5)	Y (6)
KLC54AC002 Dnstrm Temp Meas, Div 4	30QKC40CT511	34UJH10002	M	H	ES		SI	S	1E	EMC	Y (2)	Y (5)	Y (6)
KLC54AC003 Upstrm Temp Meas, Div 4	30QKC40CT512	34UJH10011	M	H	ES		SI	S	1E	EMC	Y (2)	Y (5)	Y (6)
JNG40AP001 Dnstrm Temp Meas, Div 4	30QKC40CT513	34UJH01001	M	H	ES		SI	S	1E	EMC	Y (2)	Y (5)	Y (6)
JNG40AP001 Upstrm Temp Meas, Div 4	30QKC40CT514	34UJH01001	M	H	ES		SI	S	1E	EMC	Y (2)	Y (5)	Y (6)
KLC54AC002 Upstrm Temp Meas, Div 4	30QKC40CT524	34UJH10002	M	H	ES		SI	S	1E	EMC	Y (2)	Y (5)	Y (6)
KLL61AC001 Upstrm Press Meas, Div 1	30QKF10CP501	30UFA01038	M	H	ES		SI	S	1E	EMC	Y (2)	Y (5)	Y (6)
QKF10AA002 Upstrm Press Meas, Div 1	30QKF10CP502	30UFA01038	M	H	ES		SI	S	1E	EMC	Y (2)	Y (5)	Y (6)
QKF10AA002 Dnstrm Press Meas, Div 1	30QKF10CP503	30UFA01038	M	H	ES		SI	S	1E	EMC	Y (2)	Y (5)	Y (6)
KLL61AC001 Upstrm Temp Meas, Div 1	30QKF10CT501	30UFA01038	M	H	ES		SI	S	1E	EMC	Y (2)	Y (5)	Y (6)
KLL61AC001 Dnstrm Temp Meas,Div 1	30QKF10CT502	30UFA01038	M	H	ES		SI	S	1E	EMC	Y (2)	Y (5)	Y (6)
KLL64AC001 Upstrm Press Meas, Div 4	30QKF40CP501	30UFA01088	M	H	ES		SI	S	1E	EMC	Y (2)	Y (5)	Y (6)
QKF40AA002 Upstrm Press Meas, Div 4	30QKF40CP502	30UFA01088	M	H	ES		SI	S	1E	EMC	Y (2)	Y (5)	Y (6)
QKF40AA002 Dnstrm Press Meas, Div 4	30QKF40CP503	30UFA01088	M	H	ES		SI	S	1E	EMC	Y (2)	Y (5)	Y (6)
KLL64AC001 Upstrm Temp Meas, Div 4	30QKF40CT501	30UFA01088	M	H	ES		SI	S	1E	EMC	Y (2)	Y (5)	Y (6)
KLL64AC001 Dnstrm Temp Meas, Div 4	30QKF40CT502	30UFA01088	M	H	ES		SI	S	1E	EMC	Y (2)	Y (5)	Y (6)
Extra Borating System (EBS)													
EBS Outside Cont Iso Valve Actuator	30JDH10AA006	30UFA10045	M	H	ES	PAM	SI	S	1E	EMC	Y (2)	Y (5)	Y (6)
EBS Test Line Iso Valve Actuator	30JDH10AA008	30UFA01038	M	H	ES		SI	S	1E	EMC	Y (2)	Y (5)	Y (6)
EBS RCS Iso Valve Actuator	30JDH10AA015	30UJA11003	H	H	ES		SI	S	1E	EMC	Y (1)	Y (5)	
EBS Pump Motor	30JDH10AP001	30UFA01038	M	H	ES		SI	S	1E	EMC	Y (2)	Y (5)	Y (6)
EBS RCS Iso Valve Actuator	30JDH20AA015	30UJA11005	H	H	ES		SI	S	1E	EMC	Y (1)	Y (5)	
EBS RCS Iso Valve Actuator	30JDH30AA015	30UJA11006	H	H	ES		SI	S	1E	EMC	Y (1)	Y (5)	
EBS Outside Cont Iso Valve Actuator	30JDH40AA006	30UFA10095	M	H	ES	PAM	SI	S	1E	EMC	Y (2)	Y (5)	Y (6)
EBS Test Line Iso Valve Actuator	30JDH40AA008	30UFA01088	M	H	ES		SI	S	1E	EMC	Y (2)	Y (5)	Y (6)
EBS RCS Iso Valve Actuator	30JDH40AA015	30UJA11008	H	H	ES		SI	S	1E	EMC	Y (1)	Y (5)	
EBS Pump Motor	30JDH40AP001	30UFA01088	M	H	ES		SI	S	1E	EMC	Y (2)	Y (5)	Y (6)
EBS Flow Meter	30JDH10CF058	30UFA01038	M	H	ES	PAM	SI	S	1E	EMC	Y (2)	Y (5)	Y (6)
EBS Tank Level Inst	30JDH10CL050	30UFA06039	M	H	ES		SI	S	1E	EMC	Y (2)	Y (5)	Y (6)
EBS Tank Level Inst	30JDH10CL060	30UFA06039	M	H	ES		SI	S	1E	EMC	Y (2)	Y (5)	Y (6)
EBS Tank Temperature Inst	30JDH10CT052	30UFA06039	M	H	ES		SI	S	1E	EMC	Y (2)	Y (5)	Y (6)

Table 3.11-1—List of Environmentally Qualified Electrical/I&C Equipment (Sheet 65 of 130)

Name Tag (Equipment Description)	Tag Number	Local Area KKS ID (Room Location)	EQ Environment (Note 1)	Radiation Environment Zone (Note 2)	EQ Designated Function (Note 3)	Safety Class (Note 4)	EQ Program Designation (Note 5)
EBS Tank Temperature Inst	30JDH10CT062	30UFA06039	M	H	ES SI	S 1E EMC	Y (2) Y (5) Y (6)
EBS Flow Meter	30JDH40CF058	30UFA01088	M	H	ES PAM SI	S 1E EMC	Y (2) Y (5) Y (6)
EBS Tank Level Inst	30JDH40CL050	30UFA06087	M	H	ES SI	S 1E EMC	Y (2) Y (5) Y (6)
EBS Tank Level Inst	30JDH40CL060	30UFA06087	M	H	ES SI	S 1E EMC	Y (2) Y (5) Y (6)
EBS Tank Temperature Inst	30JDH40CT052	30UFA06087	M	H	ES SI	S 1E EMC	Y (2) Y (5) Y (6)
EBS Tank Temperature Inst	30JDH40CT062	30UFA06087	M	H	ES SI	S 1E EMC	Y (2) Y (5) Y (6)
Feedwater System (MFWS)							
MFW1 Ful Ld I-V	30LAB60AA001	31UJE26001	H	H	SI	S 1E EMC	Y (1) Y (5)
MFW1 I-V	30LAB60AA002	31UJE26001	H	H	ES PAM SI	S 1E EMC	Y (1) Y (5)
MFW1 Ful Ld C-V	30LAB60AA101	31UJE26001	H	H	SI	S 1E EMC	Y (1) Y (5)
MFW1 LLD I-V	30LAB64AA001	31UJE26001	H	H	SI	S 1E EMC	Y (1) Y (5)
MFW1 LLD C-V	30LAB64AA101	31UJE26001	H	H	SI	S 1E EMC	Y (1) Y (5)
MFW1 VLLD C-V	30LAB64AA102	31UJE26001	H	H	SI	S 1E EMC	Y (1) Y (5)
MFW2 Ful Ld I-V	30LAB70AA001	32UJE26001	H	H	SI	S 1E EMC	Y (1) Y (5)
MFW2 I-V	30LAB70AA002	32UJE26001	H	H	ES PAM SI	S 1E EMC	Y (1) Y (5)
MFW2 Ful Ld C-V	30LAB70AA101	32UJE26001	H	H	SI	S 1E EMC	Y (1) Y (5)
MFW2 LLD I-V	30LAB74AA001	32UJE26001	H	H	SI	S 1E EMC	Y (1) Y (5)
MFW2 LLD C-V	30LAB74AA101	32UJE26001	H	H	SI	S 1E EMC	Y (1) Y (5)
MFW2 VLLD C-V	30LAB74AA102	32UJE26001	H	H	SI	S 1E EMC	Y (1) Y (5)
MFW3 Ful Ld I-V	30LAB80AA001	33UJE26001	H	H	SI	S 1E EMC	Y (1) Y (5)
MFW3 I-V	30LAB80AA002	33UJE26001	H	H	ES PAM SI	S 1E EMC	Y (1) Y (5)
MFW3 Ful Ld C-V	30LAB80AA101	33UJE26001	H	H	SI	S 1E EMC	Y (1) Y (5)
MFW3 LLD I-V	30LAB84AA001	33UJE26001	H	H	SI	S 1E EMC	Y (1) Y (5)
MFW3 LLD C-V	30LAB84AA101	33UJE26001	H	H	SI	S 1E EMC	Y (1) Y (5)
MFW3 VLLD C-V	30LAB84AA102	33UJE26001	H	H	SI	S 1E EMC	Y (1) Y (5)
MFW4 Ful Ld I-V	30LAB90AA001	34UJE26001	H	H	SI	S 1E EMC	Y (1) Y (5)
MFW4 I-V	30LAB90AA002	34UJE26001	H	H	ES PAM SI	S 1E EMC	Y (1) Y (5)
MFW4 Ful Ld C-V	30LAB90AA101	34UJE26001	H	H	SI	S 1E EMC	Y (1) Y (5)
MFW4 LLD I-V	30LAB94AA001	34UJE26001	H	H	SI	S 1E EMC	Y (1) Y (5)
MFW4 LLD C-V	30LAB94AA101	34UJE26001	H	H	SI	S 1E EMC	Y (1) Y (5)
MFW4 VLLD C-V	30LAB94AA102	34UJE26001	H	H	SI	S 1E EMC	Y (1) Y (5)
G1 MFW1 Ful Ld C-V	30LAB60CG701	31UJE26001	H	H	SII	NS-AQ	Y (1) Y (5)
G2 MFW1 Ful Ld C-V	30LAB60CG702	31UJE26001	H	H	SII	NS-AQ	Y (1) Y (5)

Table 3.11-1—List of Environmentally Qualified Electrical/I&C Equipment (Sheet 66 of 130)

Name Tag (Equipment Description)	Tag Number	Local Area KKS ID (Room Location)	EQ Environment (Note 1)	Radiation Environment Zone (Note 2)	EQ Designated Function (Note 3)	Safety Class (Note 4)		EQ Program Designation (Note 5)	
G3 MFW1 Ful Ld C-V	30LAB60CG703	31UJE26001	H	H	SII	NS-AQ		Y (1)	Y (5)
T2 MFW1 Upstr I-V	30LAB60CT762	31UJE26001	H	H	SI	S	1E	Y (1)	Y (5)
T3 MFW1 Dnstr I-V	30LAB60CT763	31UJE26001	H	H	SI	S	1E	Y (1)	Y (5)
G1 MFW1 LLD C-V	30LAB64CG701	31UJE26001	H	H	SII	NS-AQ		Y (1)	Y (5)
G2 MFW1 LLD C-V	30LAB64CG702	31UJE26001	H	H	SII	NS-AQ		Y (1)	Y (5)
G3 MFW1 LLD C-V	30LAB64CG703	31UJE26001	H	H	SII	NS-AQ		Y (1)	Y (5)
G1 MFW1 VLLD C-V	30LAB64CG704	31UJE26001	H	H	SII	NS-AQ		Y (1)	Y (5)
G2 MFW1 VLLD C-V	30LAB64CG705	31UJE26001	H	H	SII	NS-AQ		Y (1)	Y (5)
G3 MFW1 VLLD C-V	30LAB64CG706	31UJE26001	H	H	SII	NS-AQ		Y (1)	Y (5)
G1 MFW2 Ful Ld C-V	30LAB70CG701	32UJE26001	H	H	SII	NS-AQ		Y (1)	Y (5)
G2 MFW2 FUl Ld C-V	30LAB70CG702	32UJE26001	H	H	SII	NS-AQ		Y (1)	Y (5)
G3 MFW2 Ful Ld C-V	30LAB70CG703	32UJE26001	H	H	SII	NS-AQ		Y (1)	Y (5)
T1 MFW2 Dnstr Fix Pt	30LAB70CT708	32UJE26001	H	H	SI	S	1E	Y (1)	Y (5)
T2 MFW2 Upstr I-V	30LAB70CT762	32UJE26001	H	H	SI	S	1E	Y (1)	Y (5)
T3 MFW2 Dnstr I-V	30LAB70CT763	32UJE26001	H	H	SI	S	1E	Y (1)	Y (5)
G1 MFW2 LLD C-V	30LAB74CG701	32UJE26001	H	H	SII	NS-AQ		Y (1)	Y (5)
G2 MFW2 LLD C-V	30LAB74CG702	32UJE26001	H	H	SII	NS-AQ		Y (1)	Y (5)
G3 MFW2 LLD C-V	30LAB74CG703	32UJE26001	H	H	SII	NS-AQ		Y (1)	Y (5)
G1 MFW2 VLLD C-V	30LAB74CG704	32UJE26001	H	H	SII	NS-AQ		Y (1)	Y (5)
G2 MFW2 VLLD C-V	30LAB74CG705	32UJE26001	H	H	SII	NS-AQ		Y (1)	Y (5)
G2 MFW2 VLLD C-V	30LAB74CG706	32UJE26001	H	H	SII	NS-AQ		Y (1)	Y (5)
G1 MFW3 Ful Ld C-V	30LAB80CG701	33UJE26001	H	H	SII	NS-AQ		Y (1)	Y (5)
G2 MFW3 Ful Ld C-V	30LAB80CG702	33UJE26001	H	H	SII	NS-AQ		Y (1)	Y (5)
G3 MFW3 Ful Ld C-V	30LAB80CG703	33UJE26001	H	H	SII	NS-AQ		Y (1)	Y (5)
P MFW3 ATP	30LAB80CP407	33UJE26001	H	H	SI	S	1E	Y (1)	Y (5)
T1 MFW3 Dnstr Fix Pt	30LAB80CT708	33UJE26001	H	H	SI	S	1E	Y (1)	Y (5)
T2 MFW3 Upstr I-V	30LAB80CT762	33UJE26001	H	H	SI	S	1E	Y (1)	Y (5)
T3 MFW3 Dnstr I-V	30LAB80CT763	33UJE26001	H	H	SI	S	1E	Y (1)	Y (5)
G1 MFW3 LLD C-V	30LAB84CG701	33UJE26001	H	H	SII	NS-AQ		Y (1)	Y (5)
G2 MFW3 LLD C-V	30LAB84CG702	33UJE26001	H	H	SII	NS-AQ		Y (1)	Y (5)
G3 MFW3 LLD C-V	30LAB84CG703	33UJE26001	H	H	SII	NS-AQ		Y (1)	Y (5)
G1 MFW3 VLLD C-V	30LAB84CG704	33UJE26001	H	H	SII	NS-AQ		Y (1)	Y (5)
G2 MFW3 VLLD C-V	30LAB84CG705	33UJE26001	H	H	SII	NS-AQ		Y (1)	Y (5)

Table 3.11-1—List of Environmentally Qualified Electrical/I&C Equipment (Sheet 67 of 130)

Name Tag (Equipment Description)	Tag Number	Local Area KKS ID (Room Location)	EQ Environment (Note 1)	Radiation Environment Zone (Note 2)	EQ Designated Function (Note 3)	Safety Class (Note 4)	EQ Program Designation (Note 5)
G3 MFW3 VLLD C-V	30LAB84CG706	33UJE26001	H	H	SII	NS-AQ	Y (1) Y (5)
G1 MFW4 Ful Ld C-V	30LAB90CG701	34UJE26001	H	H	SII	NS-AQ	Y (1) Y (5)
G2 MFW4 Ful Ld C-V	30LAB90CG702	34UJE26001	H	H	SII	NS-AQ	Y (1) Y (5)
G3 MFW4 Ful Ld C-V	30LAB90CG703	34UJE26001	H	H	SII	NS-AQ	Y (1) Y (5)
T2 MFW4 Upstr I-V	30LAB90CT762	34UJE26001	H	H	SI	S 1E	Y (1) Y (5)
T3 MFW4 Dnstr I-V	30LAB90CT763	34UJE26001	H	H	SI	S 1E	Y (1) Y (5)
G1 MFW4 LLD C-V	30LAB94CG701	34UJE26001	H	H	SII	NS-AQ	Y (1) Y (5)
G2 MFW4 LLD C-V	30LAB94CG702	34UJE26001	H	H	SII	NS-AQ	Y (1) Y (5)
G3 MFW4 LLD C-V	30LAB94CG703	34UJE26001	H	H	SII	NS-AQ	Y (1) Y (5)
G1 MFW4 VLLD C-V	30LAB94CG704	34UJE26001	H	H	SII	NS-AQ	Y (1) Y (5)
G2 MFW4 VLLD C-V	30LAB94CG705	34UJE26001	H	H	SII	NS-AQ	Y (1) Y (5)
G3 MFW4 VLLD C-V	30LAB94CG706	34UJE26001	H	H	SII	NS-AQ	Y (1) Y (5)
Emergency Feedwater System (EFWS)							
EFW SG Isolation Valve Actuator Train 1	30LAR11AA006	31UJH10010	M	H	ES PAM SI	S 1E EMC	Y (2) Y (5) Y (6)
EFW Flow Control Valve Actuator Train 1	30LAR11AA103	31UJH01024	M	H	ES SI	S 1E EMC	Y (2) Y (5) Y (6)
EFW SG Level Control Valve Actuator Train 1	30LAR11AA105	31UJH01024	M	H	ES SI	S 1E EMC	Y (2) Y (5) Y (6)
EFW Discharge Header Isolation Valve Act	30LAR14AA001	31UJH01024	M	H	ES SI	S 1E EMC	Y (2) Y (5) Y (6)
EFW SG Isolation Valve Actuator Train 2	30LAR21AA006	32UJH10002	M	H	ES PAM SI	S 1E EMC	Y (2) Y (5) Y (6)
EFW Flow Control Valve Actuator Train 2	30LAR21AA103	32UJH01024	M	H	ES SI	S 1E EMC	Y (2) Y (5) Y (6)
EFW SG Level Control Valve Actuator Train 2	30LAR21AA105	32UJH01024	M	H	ES SI	S 1E EMC	Y (2) Y (5) Y (6)
EFW Discharge Header Isolation Valve Act	30LAR24AA001	32UJH01024	M	H	ES SI	S 1E EMC	Y (2) Y (5) Y (6)
EFW SG Isolation Valve Actuator Train 3	30LAR31AA006	33UJH10002	M	H	ES PAM SI	S 1E EMC	Y (2) Y (5) Y (6)
EFW Flow Control Valve Actuator Train 3	30LAR31AA103	33UJH01038	M	H	ES SI	S 1E EMC	Y (2) Y (5) Y (6)
EFW SG Level Control Valve Actuator Train 3	30LAR31AA105	33UJH01038	M	H	ES SI	S 1E EMC	Y (2) Y (5) Y (6)
EFW Discharge Header Isolation Valve Act	30LAR34AA001	33UJH01038	M	H	ES SI	S 1E EMC	Y (2) Y (5) Y (6)
EFW SG Isolation Valve Actuator Train 4	30LAR41AA006	34UJH10004	M	H	ES PAM SI	S 1E EMC	Y (2) Y (5) Y (6)
EFW Flow Control Valve Actuator Train 4	30LAR41AA103	34UJH01024	M	H	ES SI	S 1E EMC	Y (2) Y (5) Y (6)
EFW SG Level Control Valve Actuator Train 4	30LAR41AA105	34UJH01024	M	H	ES SI	S 1E EMC	Y (2) Y (5) Y (6)
EFW Discharge Header Isolation Valve Act	30LAR44AA001	34UJH01024	M	H	ES SI	S 1E EMC	Y (2) Y (5) Y (6)
EFW Pump Motor Heater Train 1	30LAS11AH501	31UJH01021	M	H	SII	NS-AQ	Y (2) Y (5)
EFW Pump Motor Train 1	30LAS11AP001	31UJH01021	M	H	ES SI	S 1E EMC	Y (2) Y (5) Y (6)
EFW Pump Motor Heater Train 2	30LAS21AH501	32UJH01024	M	H	SII	NS-AQ	Y (2) Y (5)
EFW Pump Motor Train 2	30LAS21AP001	32UJH01024	M	H	ES SI	S 1E EMC	Y (2) Y (5) Y (6)

Table 3.11-1—List of Environmentally Qualified Electrical/I&C Equipment (Sheet 68 of 130)

Name Tag (Equipment Description)	Tag Number	Local Area KKS ID (Room Location)	EQ Environment (Note 1)	Radiation Environment Zone (Note 2)	EQ Designated Function (Note 3)	Safety Class (Note 4)	EQ Program Designation (Note 5)
EFW Pump Motor Heater Train 3	30LAS31AH501	33UJH01024	M	H	SII	NS-AQ	Y (2) Y (5)
EFW Pump Motor Train 3	30LAS31AP001	33UJH01024	M	H	ES SI	S 1E EMC	Y (2) Y (5) Y (6)
EFW Pump Motor Heater Train 4	30LAS41AH501	34UJH01024	M	H	SII	NS-AQ	Y (2) Y (5)
EFW Pump Motor Train 4	30LAS41AP001	34UJH01024	M	H	ES SI	S 1E EMC	Y (2) Y (5) Y (6)
EFW Pool Level (Wide Range) Train 1	30LAR10CL001	31UJH10026	M	H	PAM SI	S 1E EMC	Y (2) Y (5) Y (6)
EFW Pool Level (Narrow Range) Train 1	30LAR10CL002	31UJH10026	M	H	SII	NS-AQ	Y (2) Y (5)
EFW Pool Level (Wide Range) Train 1	30LAR10CL003	31UJH10026	M	H	PAM SI	S 1E EMC	Y (2) Y (5) Y (6)
EFW Pool Local Level Guage Train 1	30LAR10CL501	31UJH05026	M	H	SII	NS-AQ	Y (2) Y (5)
EFW Storage Pool Temperature Train 1	30LAR10CT001	31UJH05026	M	H	SII	NS-AQ	Y (2) Y (5)
EFW Flow Meter to SG Train 1 #1	30LAR11CF002	31UJH01024	M	H	PAM SI	S 1E EMC	Y (2) Y (5) Y (6)
EFW Flow Meter to SG Train 1 #2	30LAR11CF003	31UJH01024	M	H	PAM SI	S 1E EMC	Y (2) Y (5) Y (6)
EFW Pump Flow Meter Train 1	30LAR11CF801	31UJH01024	M	H	ES SI	S 1E EMC	Y (2) Y (5) Y (6)
EFW SG Level Control Valve Position Train 1	30LAR11CG105	31UJH01024	M	H	SI	S 1E EMC	Y (2) Y (5) Y (6)
EFW Flow Control Valve Position Train 1	30LAR11CG803	31UJH01024	M	H	ES SI	S 1E EMC	Y (2) Y (5) Y (6)
EFW Pump Suction Pressure Train 1	30LAR11CP001	31UJH01024	M	H	SII	NS-AQ	Y (2) Y (5)
EFW Pump Developed Head Train 1	30LAR11CP002	31UJH01024	M	H	SII	NS-AQ	Y (2) Y (5)
EFW Pump Discharge Pressure Train 1	30LAR11CP003	31UJH01024	M	H	SII	NS-AQ	Y (2) Y (5)
EFW SG Level Control Valve DP Train 1	30LAR11CP004	31UJH01024	M	H	SII	NS-AQ	Y (2) Y (5)
EFW Pump Suction Temperature Train 1	30LAR11CT001	31UJH01024	M	H	SII	NS-AQ	Y (2) Y (5)
EFW Pump Discharge Temperature Train 1	30LAR11CT004	31UJH10004	M	H	SII	NS-AQ	Y (2) Y (5)
EFW Discharge Header MOV Position Train 1	30LAR14CG001A	31UJH01024	M	H	SI	S 1E EMC	Y (2) Y (5) Y (6)
EFW Discharge Header MOV Position Train 1	30LAR14CG001B	31UJH01024	M	H	SI	S 1E EMC	Y (2) Y (5) Y (6)
EFW Pool Level (Wide Range) Train 2	30LAR20CL001	32UJH10020	M	H	PAM SI	S 1E EMC	Y (2) Y (5) Y (6)
EFW Pool Level (Narrow Range) Train 2	30LAR20CL002	32UJH10020	M	H	SII	NS-AQ	Y (2) Y (5)
EFW Pool Level (Wide Range) Train 2	30LAR20CL003	32UJH10020	M	H	PAM SI	S 1E EMC	Y (2) Y (5) Y (6)
EFW Pool Local Level Guage Train 2	30LAR20CL501	32UJH05020	M	H	SII	NS-AQ	Y (2) Y (5)
EFW Storage Pool Temperature Train 2	30LAR20CT001	32UJH05020	M	H	SII	NS-AQ	Y (2) Y (5)
EFW Flow Meter to SG Train 2 #1	30LAR21CF002	32UJH01005	M	H	PAM SI	S 1E EMC	Y (2) Y (5) Y (6)
EFW Flow Meter to SG Train 2 #2	30LAR21CF003	32UJH01005	M	H	PAM SI	S 1E EMC	Y (2) Y (5) Y (6)
EFW Pump Flow Meter Train 2	30LAR21CF801	32UJH01024	M	H	ES SI	S 1E EMC	Y (2) Y (5) Y (6)
EFW SG Level Control Valve Position Train 2	30LAR21CG105	32UJH01024	M	H	SI	S 1E EMC	Y (2) Y (5) Y (6)
EFW Flow Control Valve Position Train 2	30LAR21CG803	32UJH01024	M	H	ES SI	S 1E EMC	Y (2) Y (5) Y (6)
EFW Pump Suction Pressure Train 2	30LAR21CP001	32UJH01024	M	H	SII	NS-AQ	Y (2) Y (5)

Table 3.11-1—List of Environmentally Qualified Electrical/I&C Equipment (Sheet 69 of 130)

Name Tag (Equipment Description)	Tag Number	Local Area KKS ID (Room Location)	EQ Environment (Note 1)	Radiation Environment Zone (Note 2)	EQ Designated Function (Note 3)	Safety Class (Note 4)	EQ Program Designation (Note 5)
EFW Pump Developed Head Train 2	30LAR21CP002	32UJH01024	M	H	SII	NS-AQ	Y (2) Y (5)
EFW Pump Discharge Pressure Train 2	30LAR21CP003	32UJH01024	M	H	SII	NS-AQ	Y (2) Y (5)
EFW SG Level Control Valve DP Train 2	30LAR21CP004	32UJH01024	M	H	SII	NS-AQ	Y (2) Y (5)
EFW Pump Suction Temperature Train 2	30LAR21CT001	32UJH01024	M	H	SII	NS-AQ	Y (2) Y (5)
EFW Pump Discharge Temperature Train 2	30LAR21CT004	32UJH10002	M	H	SII	NS-AQ	Y (2) Y (5)
EFW Discharge Header MOV Position Train 2	30LAR24CG001A	32UJH01024	M	H	SI	S 1E EMC	Y (2) Y (5) Y (6)
EFW Discharge Header MOV Position Train 2	30LAR24CG001B	32UJH01024	M	H	SI	S 1E EMC	Y (2) Y (5) Y (6)
EFW Pool Level (Wide Range) Train 3	30LAR30CL001	33UJH10020	M	H	PAM SI	S 1E EMC	Y (2) Y (5) Y (6)
EFW Pool Level (Narrow Range) Train 3	30LAR30CL002	33UJH10020	M	H	SII	NS-AQ	Y (2) Y (5)
EFW Pool Level (Wide Range) Train 3	30LAR30CL003	33UJH10020	M	H	PAM SI	S 1E EMC	Y (2) Y (5) Y (6)
EFW Pool Local Level Guage Train 3	30LAR30CL501	33UJH05020	M	H	SII	NS-AQ	Y (2) Y (5)
EFW Storage Pool Temperature Train 3	30LAR30CT001	33UJH05024	M	H	SII	NS-AQ	Y (2) Y (5)
EFW Flow Meter to SG Train 3 #1	30LAR31CF002	33UJH01005	M	H	PAM SI	S 1E EMC	Y (2) Y (5) Y (6)
EFW Flow Meter to SG Train 3 #2	30LAR31CF003	33UJH01005	M	H	PAM SI	S 1E EMC	Y (2) Y (5) Y (6)
EFW Pump Flow Meter Train 3	30LAR31CF801	33UJH01038	M	H	ES SI	S 1E EMC	Y (2) Y (5) Y (6)
EFW SG Level Control Valve Position Train 3	30LAR31CG105	33UJH01038	M	H	SI	S 1E EMC	Y (2) Y (5) Y (6)
EFW Flow Control Valve Position Train 3	30LAR31CG803	33UJH01038	M	H	ES SI	S 1E EMC	Y (2) Y (5) Y (6)
EFW Pump Suction Pressure Train 3	30LAR31CP001	33UJH01038	M	H	SII	NS-AQ	Y (2) Y (5)
EFW Pump Developed Head Train 3	30LAR31CP002	33UJH01038	M	H	SII	NS-AQ	Y (2) Y (5)
EFW Pump Discharge Pressure Train 3	30LAR31CP003	33UJH01038	M	H	SII	NS-AQ	Y (2) Y (5)
EFW SG Level Control Valve DP Train Div 13	30LAR31CP004	33UJH01038	M	H	SII	NS-AQ	Y (2) Y (5)
EFW Pump Suction Temperature Train 3	30LAR31CT001	33UJH01038	M	H	SII	NS-AQ	Y (2) Y (5)
EFW Pump Discharge Temperature Train 3	30LAR31CT004	33UJH10002	M	H	SII	NS-AQ	Y (2) Y (5)
EFW Discharge Header MOV Position Train 3	30LAR34CG001A	33UJH01038	M	H	SI	S 1E EMC	Y (2) Y (5) Y (6)
EFW Discharge Header MOV Position Train 3	30LAR34CG001B	33UJH01038	M	H	SI	S 1E EMC	Y (2) Y (5) Y (6)
EFW Pool Level (Wide Range) Train 4	30LAR40CL001	34UJH10026	M	H	PAM SI	S 1E EMC	Y (2) Y (5) Y (6)
EFW Pool Level (Narrow Range) Train 4	30LAR40CL002	34UJH10026	M	H	SII	NS-AQ	Y (2) Y (5)
EFW Pool Level (Wide Range) Train 4	30LAR40CL003	34UJH10026	M	H	PAM SI	S 1E EMC	Y (2) Y (5) Y (6)
EFW Pool Local Level Guage Train 4	30LAR40CL501	34UJH05026	M	H	SII	NS-AQ	Y (2) Y (5)
EFW Storage Pool Temperature Train 4	30LAR40CT001	34UJH05026	M	H	SII	NS-AQ	Y (2) Y (5)
EFW Flow Meter to SG Train 4 #1	30LAR41CF002	34UJH01024	M	H	PAM SI	S 1E EMC	Y (2) Y (5) Y (6)
EFW Flow Meter to SG Train 4 #2	30LAR41CF003	34UJH01024	M	H	PAM SI	S 1E EMC	Y (2) Y (5) Y (6)
EFW Pump Flow Meter Train 4	30LAR41CF801	34UJH01024	M	H	ES SI	S 1E EMC	Y (2) Y (5) Y (6)

Table 3.11-1—List of Environmentally Qualified Electrical/I&C Equipment (Sheet 70 of 130)

Name Tag (Equipment Description)	Tag Number	Local Area KKS ID (Room Location)	EQ Environment (Note 1)	Radiation Environment Zone (Note 2)	EQ Designated Function (Note 3)	Safety Class (Note 4)	EQ Program Designation (Note 5)
EFW SG Level Control Valve Position Train 4	30LAR41CG105	34UJH01024	M	H	SI	S 1E EMC	Y (2) Y (5) Y (6)
EFW Flow Control Valve Position Train 4	30LAR41CG803	34UJH01024	M	H	ES SI	S 1E EMC	Y (2) Y (5) Y (6)
EFW Pump Suction Pressure Train 4	30LAR41CP001	34UJH01024	M	H	SII	NS-AQ	Y (2) Y (5)
EFW Pump Developed Head Train 4	30LAR41CP002	34UJH01024	M	H	SII	NS-AQ	Y (2) Y (5)
EFW Pump Discharge Pressure Train 4	30LAR41CP003	34UJH01024	M	H	SII	NS-AQ	Y (2) Y (5)
EFW SG Level Control Valve DP Train 4	30LAR41CP004	34UJH01024	M	H	SII	NS-AQ	Y (2) Y (5)
EFW Pump Suction Temperature Train 4	30LAR41CT001	34UJH01024	M	H	SII	NS-AQ	Y (2) Y (5)
EFW Pump Discharge Temperature Train 4	30LAR41CT004	34UJH10004	M	H	SII	NS-AQ	Y (2) Y (5)
EFW Discharge Header MOV Position Train 4	30LAR44CG001A	34UJH01024	M	H	SI	S 1E EMC	Y (2) Y (5) Y (6)
EFW Discharge Header MOV Position Train 4	30LAR44CG001B	34UJH01024	M	H	SI	S 1E EMC	Y (2) Y (5) Y (6)
EFW Pump Train 1 Motor Current	30LAS11CE102	31UJH01021	M	H	SII	NS-AQ	Y (2) Y (5)
EFW Pump Train 1 Oil Level (Local)	30LAS11CL501	31UJH01021	M	H	SII	NS-AQ	Y (2) Y (5)
EFW Pump Train 1 Oil Level (Local)	30LAS11CL502	31UJH01021	M	H	SII	NS-AQ	Y (2) Y (5)
EFW Pump Train 1 Bearing Temperature	30LAS11CT001A	31UJH01021	M	H	SII	NS-AQ	Y (2) Y (5)
EFW Pump Train 1 Bearing Temperature	30LAS11CT001B	31UJH01021	M	H	SII	NS-AQ	Y (2) Y (5)
EFW Pump Train 1 Bearing Temperature	30LAS11CT002A	31UJH01021	M	H	SII	NS-AQ	Y (2) Y (5)
EFW Pump Train 1 Bearing Temperature	30LAS11CT002B	31UJH01021	M	H	SII	NS-AQ	Y (2) Y (5)
EFW Pump Train 1 Bearing Temperature	30LAS11CT003A	31UJH01021	M	H	SII	NS-AQ	Y (2) Y (5)
EFW Pump Train 1 Bearing Temperature	30LAS11CT003B	31UJH01021	M	H	SII	NS-AQ	Y (2) Y (5)
EFW Pump Train 1 Motor Winding Temperature	30LAS11CT005	31UJH01021	M	H	SII	NS-AQ	Y (2) Y (5)
EFW Pump Train 1 Motor Winding Temperature	30LAS11CT006	31UJH01021	M	H	SII	NS-AQ	Y (2) Y (5)
EFW Pump Train 1 Motor Winding Temperature	30LAS11CT007	31UJH01021	M	H	SII	NS-AQ	Y (2) Y (5)
EFW Pump Train 1 Motor Bearing Temperature	30LAS11CT008A	31UJH01021	M	H	SII	NS-AQ	Y (2) Y (5)
EFW Pump Train 1 Motor Bearing Temperature	30LAS11CT008B	31UJH01021	M	H	SII	NS-AQ	Y (2) Y (5)
EFW Pump Train 1 Motor Bearing Temperature	30LAS11CT009A	31UJH01021	M	H	SII	NS-AQ	Y (2) Y (5)
EFW Pump Train 1 Motor Bearing Temperature	30LAS11CT009B	31UJH01021	M	H	SII	NS-AQ	Y (2) Y (5)
EFW Pump Train 2 Motor Current	30LAS21CE102	32UJH01024	M	H	SII	NS-AQ	Y (2) Y (5)

Table 3.11-1—List of Environmentally Qualified Electrical/I&C Equipment (Sheet 71 of 130)

Name Tag (Equipment Description)	Tag Number	Local Area KKS ID (Room Location)	EQ Environment (Note 1)	Radiation Environment Zone (Note 2)	EQ Designated Function (Note 3)	Safety Class (Note 4)	EQ Program Designation (Note 5)	
EFW Pump Train 2 Oil Level (Local)	30LAS21CL501	32UJH01024	M	H	SII	NS-AQ	Y (2)	Y (5)
EFW Pump Train 2 Oil Level (Local)	30LAS21CL502	32UJH01024	M	H	SII	NS-AQ	Y (2)	Y (5)
EFW Pump Train 2 Bearing Temperature	30LAS21CT001A	32UJH01024	M	H	SII	NS-AQ	Y (2)	Y (5)
EFW Pump Train 2 Bearing Temperature	30LAS21CT001B	32UJH01024	M	H	SII	NS-AQ	Y (2)	Y (5)
EFW Pump Train 2 Bearing Temperature	30LAS21CT002A	32UJH01024	M	H	SII	NS-AQ	Y (2)	Y (5)
EFW Pump Train 2 Bearing Temperature	30LAS21CT002B	32UJH01024	M	H	SII	NS-AQ	Y (2)	Y (5)
EFW Pump Train 2 Bearing Temperature	30LAS21CT003A	32UJH01024	M	H	SII	NS-AQ	Y (2)	Y (5)
EFW Pump Train 2 Bearing Temperature	30LAS21CT003B	32UJH01024	M	H	SII	NS-AQ	Y (2)	Y (5)
EFW Pump Train 2 Motor Winding Temperature	30LAS21CT005	32UJH01024	M	H	SII	NS-AQ	Y (2)	Y (5)
EFW Pump Train 2 Motor Winding Temperature	30LAS21CT006	32UJH01024	M	H	SII	NS-AQ	Y (2)	Y (5)
EFW Pump Train 2 Motor Winding Temperature	30LAS21CT007	32UJH01024	M	H	SII	NS-AQ	Y (2)	Y (5)
EFW Pump Train 2 Motor Winding Temperature	30LAS21CT008A	32UJH01024	M	H	SII	NS-AQ	Y (2)	Y (5)
EFW Pump Train 2 Motor Winding Temperature	30LAS21CT008B	32UJH01024	M	H	SII	NS-AQ	Y (2)	Y (5)
EFW Pump Train 2 Motor Winding Temperature	30LAS21CT009A	32UJH01024	M	H	SII	NS-AQ	Y (2)	Y (5)
EFW Pump Train 2 Motor Winding Temperature	30LAS21CT009B	32UJH01024	M	H	SII	NS-AQ	Y (2)	Y (5)
EFW Pump Train 3 Motor Current	30LAS31CE102	33UJH01024	M	H	SII	NS-AQ	Y (2)	Y (5)
EFW Pump Train 3 Oil Level (Local)	30LAS31CL501	33UJH01024	M	H	SII	NS-AQ	Y (2)	Y (5)
EFW Pump Train 3 Oil Level (Local)	30LAS31CL502	33UJH01024	M	H	SII	NS-AQ	Y (2)	Y (5)
EFW Pump Train 3 Bearing Temperature	30LAS31CT001A	33UJH01024	M	H	SII	NS-AQ	Y (2)	Y (5)
EFW Pump Train 3 Bearing Temperature	30LAS31CT001B	33UJH01024	M	H	SII	NS-AQ	Y (2)	Y (5)
EFW Pump Train 3 Bearing Temperature	30LAS31CT002A	33UJH01024	M	H	SII	NS-AQ	Y (2)	Y (5)
EFW Pump Train 3 Bearing Temperature	30LAS31CT002B	33UJH01024	M	H	SII	NS-AQ	Y (2)	Y (5)
EFW Pump Train 3 Bearing Temperature	30LAS31CT003A	33UJH01024	M	H	SII	NS-AQ	Y (2)	Y (5)
EFW Pump Train 3 Bearing Temperature	30LAS31CT003B	33UJH01024	M	H	SII	NS-AQ	Y (2)	Y (5)
EFW Pump Train 3 Motor Winding Temperature	30LAS31CT005	33UJH01024	M	H	SII	NS-AQ	Y (2)	Y (5)
EFW Pump Train 3 Motor Winding Temperature	30LAS31CT006	33UJH01024	M	H	SII	NS-AQ	Y (2)	Y (5)

Table 3.11-1—List of Environmentally Qualified Electrical/I&C Equipment (Sheet 72 of 130)

Name Tag (Equipment Description)	Tag Number	Local Area KKS ID (Room Location)	EQ Environment (Note 1)	Radiation Environment Zone (Note 2)	EQ Designated Function (Note 3)	Safety Class (Note 4)	EQ Program Designation (Note 5)
EFW Pump Train 3 Motor Winding Temperature	30LAS31CT007	33UJH01024	M	H	SII	NS-AQ	Y (2) Y (5)
EFW Pump Train 3 Motor Winding Temperature	30LAS31CT008A	33UJH01024	M	H	SII	NS-AQ	Y (2) Y (5)
EFW Pump Train 3 Motor Winding Temperature	30LAS31CT008B	33UJH01024	M	H	SII	NS-AQ	Y (2) Y (5)
EFW Pump Train 3 Motor Winding Temperature	30LAS31CT009A	33UJH01024	M	H	SII	NS-AQ	Y (2) Y (5)
EFW Pump Train 3 Motor Winding Temperature	30LAS31CT009B	33UJH01024	M	H	SII	NS-AQ	Y (2) Y (5)
EFW Pump Train 4 Motor Current	30LAS41CE102	34UJH01024	M	H	SII	NS-AQ	Y (2) Y (5)
EFW Pump Train 4 Oil Level (Local)	30LAS41CL501	34UJH01024	M	H	SII	NS-AQ	Y (2) Y (5)
EFW Pump Train 4 Oil Level (Local)	30LAS41CL502	34UJH01024	M	H	SII	NS-AQ	Y (2) Y (5)
EFW Pump Train 4 Bearing Temperature	30LAS41CT001A	34UJH01024	M	H	SII	NS-AQ	Y (2) Y (5)
EFW Pump Train 4 Bearing Temperature	30LAS41CT001B	34UJH01024	M	H	SII	NS-AQ	Y (2) Y (5)
EFW Pump Train 4 Bearing Temperature	30LAS41CT002A	34UJH01024	M	H	SII	NS-AQ	Y (2) Y (5)
EFW Pump Train 4 Bearing Temperature	30LAS41CT002B	34UJH01024	M	H	SII	NS-AQ	Y (2) Y (5)
EFW Pump Train 4 Bearing Temperature	30LAS41CT003A	34UJH01024	M	H	SII	NS-AQ	Y (2) Y (5)
EFW Pump Train 4 Bearing Temperature	30LAS41CT003B	34UJH01024	M	H	SII	NS-AQ	Y (2) Y (5)
EFW Pump Train 4 Motor Winding Temperature	30LAS41CT005	34UJH01024	M	H	SII	NS-AQ	Y (2) Y (5)
EFW Pump Train 4 Motor Winding Temperature	30LAS41CT006	34UJH01024	M	H	SII	NS-AQ	Y (2) Y (5)
EFW Pump Train 4 Motor Winding Temperature	30LAS41CT007	34UJH01024	M	H	SII	NS-AQ	Y (2) Y (5)
EFW Pump Train 4 Motor Winding Temperature	30LAS41CT008A	34UJH01024	M	H	SII	NS-AQ	Y (2) Y (5)
EFW Pump Train 4 Motor Winding Temperature	30LAS41CT008B	34UJH01024	M	H	SII	NS-AQ	Y (2) Y (5)
EFW Pump Train 4 Motor Winding Temperature	30LAS41CT009A	34UJH01024	M	H	SII	NS-AQ	Y (2) Y (5)
EFW Pump Train 4 Motor Winding Temperature	30LAS41CT009B	34UJH01024	M	H	SII	NS-AQ	Y (2) Y (5)
In-Containment Refueling Water Storage Tank (IRWST)							
IRWST 3-Way Isolation Valve Actuator	30JNK10AA001	31UJH01005	M	H	ES PAM SI	S 1E EMC	Y (2) Y (5) Y (6)

Table 3.11-1—List of Environmentally Qualified Electrical/I&C Equipment (Sheet 73 of 130)

Name Tag (Equipment Description)	Tag Number	Local Area KKS ID (Room Location)	EQ Environment (Note 1)	Radiation Environment Zone (Note 2)	EQ Designated Function (Note 3)			Safety Class (Note 4)			EQ Program Designation (Note 5)			
SIS TRN 2 Str. Backflush Valve Actuator	30JNK10AA004	30UJA11013	H	H			SII	NS-AQ		EMC	Y (1)		Y (5)	
SIS TRN 2 Str. Backflush Valve Actuator	30JNK10AA005	30UJA11013	H	H			SII	NS-AQ		EMC	Y (1)		Y (5)	
SIS TRN 1 Str. Backflush Valve Actuator	30JNK10AA006	30UJA11013	H	H			SII	NS-AQ		EMC	Y (1)		Y (5)	
SIS TRN 1 Str. Backflush Valve Actuator	30JNK10AA007	30UJA11013	H	H			SII	NS-AQ		EMC	Y (1)		Y (5)	
1st CVCS Suct. Iso. Valve Act. Fr IRWST	30JNK10AA009	31UJH01010	M	H	ES	PAM	SI	S	1E	EMC		Y (2)	Y (5)	Y (6)
2ndCVCS Suct. Isol. Valve Actuator	30JNK10AA013	31UJH01010	M	H	ES	PAM	SI	S	1E	EMC		Y (2)	Y (5)	Y (6)
SIS TRN 3 Stra. Backflush Valve Actuator	30JNK11AA004	30UJA11015	H	H			SII	NS-AQ		EMC	Y (1)		Y (5)	
SIS TRN 3 Str.r Backflush Valve Actuator	30JNK11AA005	30UJA11015	H	H			SII	NS-AQ		EMC	Y (1)		Y (5)	
SIS TRN 4 Str.r Backflush Valve Actuator	30JNK11AA006	30UJA11016	H	H			SII	NS-AQ		EMC	Y (1)		Y (5)	
SIS TRN 4 Str. Backflush Valve Actuator	30JNK11AA007	30UJA11016	H	H			SII	NS-AQ		EMC	Y (1)		Y (5)	
1st SAHRS Suct. Iso. Valve Act. Fr IRWST	30JNK11AA009	34UJH01010	M	H	ES	PAM	SI	S	1E	EMC		Y (2)	Y (5)	Y (6)
IRWST 3-Way Isolation Valve Actuator	30JNK20AA001	32UJH01008	M	H	ES	PAM	SI	S	1E	EMC		Y (2)	Y (5)	Y (6)
IRWST 3-Way Isolation Valve Actuator	30JNK30AA001	33UJH01008	M	H	ES	PAM	SI	S	1E	EMC		Y (2)	Y (5)	Y (6)
IRWST 3-Way Isolation Valve Actuator	30JNK40AA001	34UJH01005	M	H	ES	PAM	SI	S	1E	EMC		Y (2)	Y (5)	Y (6)
SIS Str. 1&2 Backflush Flow	30JNK10CF501	30UJA11016	H	H			SII	NS-AQ		EMC	Y (1)		Y (5)	
IRWST Level Sensor - Train 1 & 2	30JNK10CL050	30UJA11013	H	H	ES	PAM	SI	S	1E	EMC	Y (1)		Y (5)	
IRWST Level Sensor - Train 1 & 2	30JNK10CL052	30UJA11014	H	H	ES	PAM	SI	S	1E	EMC	Y (1)		Y (5)	
SIS Suction Strainer DP Sensor	30JNK10CP001	30UJA07014	H	H	ES	PAM	SI	S	1E	EMC	Y (1)		Y (5)	
SIS Suction Strainer DP Sensor	30JNK10CP002	30UJA07014	H	H	ES	PAM	SI	S	1E	EMC	Y (1)		Y (5)	
CVCS Suction Strainer DP Sensor	30JNK10CP003	30UJA07014	H	H			SII	NS-AQ		EMC	Y (1)		Y (5)	
SIS TRN 1 Dbl. Gd. Pipe Press. Sensor	30JNK10CP004	31UJH01004	M	H	ES		SI	S	1E	EMC		Y (2)	Y (5)	Y (6)
SIS TRN 2 Dbl. Gd. Pipe Press. Sensor	30JNK10CP005	32UJH05010	M	H	ES		SI	S	1E	EMC		Y (2)	Y (5)	Y (6)
CVCS Suct. Ln. Dbl. Gd. Pipe Press. Ssr.	30JNK10CP006	31UJH10001	M	H	ES		SI	S	1E	EMC		Y (2)	Y (5)	Y (6)
SIS TRN 1 Dbl. Gd. Pipe Press. Sensor, Loc.	30JNK10CP504	31UJH05006	M	H	ES		SI	S	1E	EMC		Y (2)	Y (5)	Y (6)
SIS TRN 2 Dbl. Gd. Pipe Press. Sensor, Loc.	30JNK10CP505	32UJH01008	M	H	ES		SI	S	1E	EMC		Y (2)	Y (5)	Y (6)
CVCS Suct. Ln. Dbl. Gd. Pipe Press. Ssr, loc.	30JNK10CP506	31UJH01010	M	H	ES		SI	S	1E	EMC		Y (2)	Y (5)	Y (6)
IRWST Temperature Sensor	30JNK10CT054	30UJA04003	H	H	ES		SI	S	1E	EMC	Y (1)		Y (5)	
IRWST Temperature Sensor	30JNK10CT056	30UJA04003	H	H	ES		SI	S	1E	EMC	Y (1)		Y (5)	
SIS Str. 3&4 Backflush Flow	30JNK11CF501	30UJA11016	H	H			SII	NS-AQ		EMC	Y (1)		Y (5)	
IRWST Level Sensor - Train 3 & 4	30JNK11CL050	30UJA11015	H	H	ES	PAM	SI	S	1E	EMC	Y (1)		Y (5)	
IRWST Level Sensor - Train 3 & 4	30JNK11CL052	30UJA11016	H	H	ES	PAM	SI	S	1E	EMC	Y (1)		Y (5)	
SIS Suction Strainer DP Sensor	30JNK11CP001	30UJA07015	H	H	ES	PAM	SI	S	1E	EMC	Y (1)		Y (5)	
SIS Suction Strainer DP Sensor	30JNK11CP002	30UJA07015	H	H	ES	PAM	SI	S	1E	EMC	Y (1)		Y (5)	

Table 3.11-1—List of Environmentally Qualified Electrical/I&C Equipment (Sheet 74 of 130)

Name Tag (Equipment Description)	Tag Number	Local Area KKS ID (Room Location)	EQ Environment (Note 1)	Radiation Environment Zone (Note 2)	EQ Designated Function (Note 3)	Safety Class (Note 4)	EQ Program Designation (Note 5)
SAHRS Suction Strainer DP Sensor	30JNK11CP003	30UJA07015	H	H	ES SI	S 1E EMC	Y (1)
SIS TRN 3 Dbl. Gd. Pipe Press. Sensor	30JNK11CP004	33UJH05006	M	H	ES SI	S 1E EMC	Y (2) Y (5) Y (6)
SIS TRN 4 Dbl. Gd. Pipe Press. Sensor	30JNK11CP005	34UJH05006	M	H	ES SI	S 1E EMC	Y (2) Y (5) Y (6)
SAHRS Suct. Ln. Dbl. Gd. Pipe Press. Ssr	30JNK11CP006	34UJH10001	M	H	ES SI	S 1E EMC	Y (2) Y (5) Y (6)
SIS TRN 3 Dbl. Gd. Pipe Press. Sensor, loc.	30JNK11CP504	33UJH01008	M	H	ES SI	S 1E EMC	Y (2) Y (5) Y (6)
SIS TRN 4 Dbl. Gd. Pipe Press. Sensor, Loc.	30JNK11CP505	34UJH05006	M	H	ES SI	S 1E EMC	Y (2) Y (5) Y (6)
SAHRS Suct. Ln. Dbl. Gd. Pipe Pres. Ssr, Loc.	30JNK11CP506	34UJH01010	M	H	ES SI	S 1E EMC	Y (2) Y (5) Y (6)
IRWST Temperature Sensor	30JNK11CT054	30UJA04003	H	H	ES SI	S 1E EMC	Y (1) Y (5)
IRWST Temperature Sensor	30JNK11CT056	30UJA04003	H	H	ES SI	S 1E EMC	Y (1) Y (5)
Main Steam System (MSS)							
MSIV Trn1	30LBA10AA002	31UJE34002	H	H	RT ES PAM SI	S 1E EMC	Y (1) Y (5)
MSIV Trn1 Upstr D-V	30LBA10AA441	31UJE29002	H	M	PAM SI	S 1E EMC	Y (1) Y (5)
MSIV Trn1 Dnstr D-V	30LBA10AA442	31UJE29002	H	M	SI	S 1E EMC	Y (1) Y (5)
MSIV Trn1 2nd D-V	30LBA10AA444	31UJE29002	H	M	SI	S 1E EMC	Y (1) Y (5)
MSRCV Trn 1	30LBA13AA101	31UJE29002	H	M	RT ES PAM SI	S 1E EMC	Y (1) Y (5)
MSIV Byp Ln I-V Trn1	30LBA14AA001	31UJE29002	H	M	PAM SI	S 1E EMC	Y (1) Y (5)
MSIV Byp Ln C-V Trn1	30LBA14AA101	31UJE29002	H	M	SI	S 1E EMC	Y (1) Y (5)
MSIV Trn2	30LBA20AA002	32UJE34002	H	H	RT ES PAM SI	S 1E EMC	Y (1) Y (5)
MSIV Trn2 Upstr D-V	30LBA20AA441	32UJE29002	H	M	PAM SI	S 1E EMC	Y (1) Y (5)
MSIV Trn2 Dnstr D-V	30LBA20AA442	32UJE29002	H	M	SI	S 1E EMC	Y (1) Y (5)
MSIV Trn2 2nd D-V	30LBA20AA444	32UJE29002	H	M	SI	S 1E EMC	Y (1) Y (5)
MSRV Trn 2	30LBA23AA101	32UJE29002	H	M	RT ES PAM SI	S 1E EMC	Y (1) Y (5)
MSIV Byp Ln I-V Trn2	30LBA24AA001	32UJE29002	H	M	PAM SI	S 1E EMC	Y (1) Y (5)
MSIV Byp Ln C-V Trn2	30LBA24AA101	32UJE29002	H	M	SI	S 1E EMC	Y (1) Y (5)
MSIV Trn3	30LBA30AA002	33UJE34002	H	H	RT ES PAM SI	S 1E EMC	Y (1) Y (5)
MSIV TRn3 Upstr D-V	30LBA30AA441	33UJE29002	H	M	PAM SI	S 1E EMC	Y (1) Y (5)
MSIV Trn3 Dnstr D-V	30LBA30AA442	33UJE29002	H	M	PAM SI	S 1E EMC	Y (1) Y (5)
MSIV Trn3 2nd D-V	30LBA30AA444	33UJE29002	H	M	PAM SI	S 1E EMC	Y (1) Y (5)
MSRV Trn 3	30LBA33AA101	33UJE29002	H	M	RT ES PAM SI	S 1E EMC	Y (1) Y (5)
MSIV Byp Ln I-V Trn3	30LBA34AA001	33UJE29002	H	M	PAM SI	S 1E EMC	Y (1) Y (5)
MSIV Byp Ln C-V Trn3	30LBA34AA101	33UJE29002	H	M	SI	S 1E EMC	Y (1) Y (5)
MSIV Trn4	30LBA40AA002	34UJE34002	H	H	RT ES PAM SI	S 1E EMC	Y (1) Y (5)

Table 3.11-1—List of Environmentally Qualified Electrical/I&C Equipment (Sheet 75 of 130)

Name Tag (Equipment Description)	Tag Number	Local Area KKS ID (Room Location)	EQ Environment (Note 1)	Radiation Environment Zone (Note 2)	EQ Designated Function (Note 3)				Safety Class (Note 4)			EQ Program Designation (Note 5)	
MSIV Trn4 Upstr D-V	30LBA40AA441	34UJE29002	H	M			PAM	SI	S	1E	EMC	Y (1)	Y (5)
MSIV Trn4 Dnstr D-V	30LBA40AA442	34UJE29002	H	M				SI	S	1E	EMC	Y (1)	Y (5)
MSIV Trn4 2nd D-V	30LBA40AA444	34UJE29002	H	M				SI	S	1E	EMC	Y (1)	Y (5)
MSRV Trn 4	30LBA43AA101	34UJE29002	H	M	RT	ES	PAM	SI	S	1E	EMC	Y (1)	Y (5)
MSIV Byp Ln I-V Trn4	30LBA44AA001	34UJE29002	H	M			PAM	SI	S	1E	EMC	Y (1)	Y (5)
MSIV Byp Ln C-V Trn4	30LBA44AA101	34UJE29002	H	M				SI	S	1E	EMC	Y (1)	Y (5)
P MSL Trn1 ATP	30LBA10CP401	31UJE28001	H	H				SII	NS-AQ			Y (1)	Y (5)
P MSL Trn1 1	30LBA10CP811	31UJE28001	H	H	RT	ES	PAM	SI	S	1E		Y (1)	Y (5)
P MSL Trn1 2	30LBA10CP821	31UJE28001	H	H	RT	ES	PAM	SI	S	1E		Y (1)	Y (5)
P MSL Trn1 3	30LBA10CP831	32UJE28001	H	H	RT	ES	PAM	SI	S	1E		Y (1)	Y (5)
P MSL Trn1 4	30LBA10CP841	32UJE28001	H	H	RT	ES	PAM	SI	S	1E		Y (1)	Y (5)
N16 Acty MS Loop 1	30LBA10CR811	31UJE28001	H	H			PAM	SI	S	1E		Y (1)	Y (5)
N16 Acty MS Loop 1	30LBA10CR821	31UJE28001	H	H			PAM	SI	S	1E		Y (1)	Y (5)
N16 Acty MS Loop 1	30LBA10CR831	31UJE28001	H	H			PAM	SI	S	1E		Y (1)	Y (5)
N16 Acty MS Loop 1	30LBA10CR841	31UJE28001	H	H			PAM	SI	S	1E		Y (1)	Y (5)
T MSL Trn1 LOCL	30LBA10CT002	31UJE34002	H	M				SII	NS-AQ			Y (1)	Y (5)
T MSL Trn1 ATP	30LBA10CT401	31UJE28001	H	H				SII	NS-AQ			Y (1)	Y (5)
G Cls 1st MSSV Trn1	30LBA11CG191	31UJE34002	H	M				SI	S	1E		Y (1)	Y (5)
G Cls 2nd MSSV Trn1	30LBA12CG191	31UJE34002	H	M				SI	S	1E		Y (1)	Y (5)
G1 MSRCV Trn1	30LBA13CG807	31UJE29002	H	M		ES		SI	S	1E		Y (1)	Y (5)
G2 MSRCV Trn1	30LBA13CG808	31UJE29002	H	M		ES		SI	S	1E		Y (1)	Y (5)
G3 MSRCV Trn1	30LBA13CG809	31UJE29002	H	M		ES		SI	S	1E		Y (1)	Y (5)
P Dnstr MSRV1 ATP	30LBA13CP401	31UJE29002	H	M				SII	NS-AQ			Y (1)	Y (5)
G MSIV1 Byp Ln C-V	30LBA14CG101	31UJE29002	H	M				SII	NS-AQ			Y (1)	Y (5)
P MSL Trn2 ATP	30LBA20CP401	31UJE28001	H	H				SII	NS-AQ			Y (1)	Y (5)
P MSL Trn2 1	30LBA20CP811	31UJE28001	H	H	RT	ES	PAM	SI	S	1E		Y (1)	Y (5)
P MSL Trn2 2	30LBA20CP821	31UJE28001	H	H	RT	ES	PAM	SI	S	1E		Y (1)	Y (5)
P MSL Trn2 3	30LBA20CP831	32UJE28001	H	H	RT	ES	PAM	SI	S	1E		Y (1)	Y (5)
P MSL Trn2 4	30LBA20CP841	32UJE28001	H	H	RT	ES	PAM	SI	S	1E		Y (1)	Y (5)
N16 Acty MS Loop 2	30LBA20CR811	32UJE28001	H	H			PAM	SI	S	1E		Y (1)	Y (5)
N16 Acty MS Loop 2	30LBA20CR821	32UJE28001	H	H			PAM	SI	S	1E		Y (1)	Y (5)
N16 Acty MS Loop 2	30LBA20CR831	32UJE28001	H	H			PAM	SI	S	1E		Y (1)	Y (5)
N16 Acty MS Loop 2	30LBA20CR841	32UJE28001	H	H			PAM	SI	S	1E		Y (1)	Y (5)

Table 3.11-1—List of Environmentally Qualified Electrical/I&C Equipment (Sheet 76 of 130)

Name Tag (Equipment Description)	Tag Number	Local Area KKS ID (Room Location)	EQ Environment (Note 1)	Radiation Environment Zone (Note 2)	EQ Designated Function (Note 3)				Safety Class (Note 4)		EQ Program Designation (Note 5)	
T MSL Trn2 LOCL	30LBA20CT002	32UJE34002	H	M				SII	NS-AQ		Y (1)	Y (5)
T MSL Trn2 ATP	30LBA20CT401	32UJE28001	H	H				SII	NS-AQ		Y (1)	Y (5)
G Cls 1st MSSV Trn2	30LBA21CG191	32UJE34002	H	M				SI	S	1E	Y (1)	Y (5)
G Cls 2nd MSSV Trn2	30LBA22CG191	32UJE34002	H	M				SI	S	1E	Y (1)	Y (5)
G1 MSRCV Trn2	30LBA23CG807	32UJE29002	H	M		ES		SI	S	1E	Y (1)	Y (5)
G2 MSRCV Trn2	30LBA23CG808	32UJE29002	H	M		ES		SI	S	1E	Y (1)	Y (5)
G3 MSRCV Trn2	30LBA23CG809	32UJE29002	H	M		ES		SI	S	1E	Y (1)	Y (5)
P Dnstr MSRV2 ATP	30LBA23CP401	32UJE29002	H	M				SII	NS-AQ		Y (1)	Y (5)
G MSIV2 Byp Ln C-V	30LBA24CG101	32UJE29002	H	M				SII	NS-AQ		Y (1)	Y (5)
P MSL Trn3 ATP	30LBA30CP401	33UJE28001	H	H				SII	NS-AQ		Y (1)	Y (5)
P MSL Trn3 1	30LBA30CP811	33UJE28001	H	H	RT	ES	PAM	SI	S	1E	Y (1)	Y (5)
P MSL Trn3 2	30LBA30CP821	33UJE28001	H	H	RT	ES	PAM	SI	S	1E	Y (1)	Y (5)
P MSL Trn3 3	30LBA30CP831	34UJE28001	H	H	RT	ES	PAM	SI	S	1E	Y (1)	Y (5)
P MSL Trn3 4	30LBA30CP841	34UJE28001	H	H	RT	ES	PAM	SI	S	1E	Y (1)	Y (5)
N16 Acty MS Loop 3	30LBA30CR811	33UJE28001	H	H			PAM	SI	S	1E	Y (1)	Y (5)
N16 Acty MS Loop 3	30LBA30CR821	33UJE28001	H	H			PAM	SI	S	1E	Y (1)	Y (5)
N16 Acty MS Loop 3	30LBA30CR831	33UJE28001	H	H			PAM	SI	S	1E	Y (1)	Y (5)
N16 Acty MS Loop 3	30LBA30CR841	33UJE28001	H	H			PAM	SI	S	1E	Y (1)	Y (5)
T MSL Trn3 LOCL	30LBA30CT002	33UJE33002	H	M				SII	NS-AQ		Y (1)	Y (5)
T MSL TRN3 ATP	30LBA30CT401	33UJE28001	H	H				SII	NS-AQ		Y (1)	Y (5)
G Cls 1st MSSV Trn3	30LBA31CG191B	33UJE33002	H	M				SI	S	1E	Y (1)	Y (5)
G Cls 2nd MSSV Trn3	30LBA32CG191B	33UJE33002	H	M				SI	S	1E	Y (1)	Y (5)
G1 MSRCV Trn3	30LBA33CG807	33UJE29002	H	M		ES		SI	S	1E	Y (1)	Y (5)
G2 MSRCV Trn3	30LBA33CG808	33UJE29002	H	M		ES		SI	S	1E	Y (1)	Y (5)
G3 MSRCV Trn3	30LBA33CG809	33UJE29002	H	M		ES		SI	S	1E	Y (1)	Y (5)
P Dnstr MSRV3 ATP	30LBA33CP401	33UJE29002	H	M				SII	NS-AQ		Y (1)	Y (5)
G MSIV3 Byp Ln C-V	30LBA34CG101	33UJE29002	H	M				SII	NS-AQ		Y (1)	Y (5)
P MSL Trn4 ATP	30LBA40CP401	34UJE28001	H	H				SII	NS-AQ		Y (1)	Y (5)
P MSL Trn4 1	30LBA40CP811	33UJE28001	H	H	RT	ES	PAM	SI	S	1E	Y (1)	Y (5)
P MSL Trn4 2	30LBA40CP821	33UJE28001	H	H	RT	ES	PAM	SI	S	1E	Y (1)	Y (5)
P MSL Trn4 3	30LBA40CP831	34UJE28001	H	H	RT	ES	PAM	SI	S	1E	Y (1)	Y (5)
P MSL Trn4 4	30LBA40CP841	34UJE28001	H	H	RT	ES	PAM	SI	S	1E	Y (1)	Y (5)
N16 Acty MS Loop 4	30LBA40CR811	34UJE28001	H	H			PAM	SI	S	1E	Y (1)	Y (5)

Table 3.11-1—List of Environmentally Qualified Electrical/I&C Equipment (Sheet 77 of 130)

Name Tag (Equipment Description)	Tag Number	Local Area KKS ID (Room Location)	EQ Environment (Note 1)	Radiation Environment Zone (Note 2)	EQ Designated Function (Note 3)	Safety Class (Note 4)	EQ Program Designation (Note 5)
N16 Acty MS Loop 4	30LBA40CR821	34UJE28001	H	H	PAM SI	S 1E	Y (1) Y (5)
N16 Acty MS Loop 4	30LBA40CR831	34UJE28001	H	H	PAM SI	S 1E	Y (1) Y (5)
N16 Acty MS Loop 4	30LBA40CR841	34UJE28001	H	H	PAM SI	S 1E	Y (1) Y (5)
T MSL Trn4 LOCL	30LBA40CT002	34UJE33002	H	M	SII	NS-AQ	Y (1) Y (5)
T MSL Trn4 ATP	30LBA40CT401	34UJE28001	H	H	SII	NS-AQ	Y (1) Y (5)
G Cls 1st MSSV Trn4	30LBA41CG191B	34UJE33002	H	M	SI	S 1E	Y (1) Y (5)
G Cls 2nd MSSV Trn4	30LBA42CG191B	34UJE33002	H	M	SI	S 1E	Y (1) Y (5)
G1 MSRCV Trn4	30LBA43CG807	34UJE29002	H	M	ES SI	S 1E	Y (1) Y (5)
G2 MSRCV Trn4	30LBA43CG808	34UJE29002	H	M	ES SI	S 1E	Y (1) Y (5)
G3 MSRCV Trn4	30LBA43CG809	34UJE29002	H	M	ES SI	S 1E	Y (1) Y (5)
P Dnstr MSRV4 ATP	30LBA43CP401	34UJE29002	H	M	SII	NS-AQ	Y (1) Y (5)
G MSIV4 Byp Ln C-V	30LBA44CG101	34UJE29002	H	M	SII	NS-AQ	Y (1) Y (5)
Steam Generator Blowdown System (SGBS)							
Hot Leg BD I-V Motor #1	30LCQ10AA001	30UJA15003	H	H	ES SI	S 1E EMC	Y (1) Y (5)
Cold Leg BD I-V #1 Motor	30LCQ10AA002	30UJA15003	H	H	ES SI	S 1E EMC	Y (1) Y (5)
Common BD I-V #1 Motor	30LCQ10AA003	30UJA11018	H	H	ES SI	S 1E EMC	Y (1) Y (5)
SG tRansfer Valve 1<->2 Motor	30LCQ10AA012	30UJA23004	H	H	SII	NS-AQ EMC	Y (1) Y (5)
SG#1 BD Flowrate Control Valve Motor	30LCQ10AA104	30UJA11018	H	H	SII	NS-AQ EMC	Y (1) Y (5)
SG #1 Hotleg BD Sampling I-V Motor	30LCQ10AA601	30UJA15013	H	H	SII	NS-AQ EMC	Y (1) Y (5)
SG #1 Coldleg BD Sampling I-V Motor	30LCQ10AA602	30UJA15013	H	H	SII	NS-AQ EMC	Y (1) Y (5)
Hot Leg BD I-V #2 Motor	30LCQ20AA001	30UJA15004	H	H	ES SI	S 1E EMC	Y (1) Y (5)
Cold Leg BD I-V #2 Motor	30LCQ20AA002	30UJA15004	H	H	ES SI	S 1E EMC	Y (1) Y (5)
Common BD I-V #2 Motor	30LCQ20AA003	30UJA11018	H	H	ES SI	S 1E EMC	Y (1) Y (5)
SG#2 BD Flowrate Control Valve Motor	30LCQ20AA104	30UJA11018	H	H	SII	NS-AQ EMC	Y (1) Y (5)
SG#2 Hot Leg BD Sampling I-V Motor	30LCQ20AA601	30UJA15014	H	H	SII	NS-AQ EMC	Y (1) Y (5)
SG#2 Cold Leg BD Sampling I-V Motor	30LCQ20AA602	30UJA15014	H	H	SII	NS-AQ EMC	Y (1) Y (5)
SG#3 Hot Leg BD I-V Motor	30LCQ30AA001	30UJA15007	H	H	ES SI	S 1E EMC	Y (1) Y (5)
SG#3 Cold Leg BD I-V Motor	30LCQ30AA002	30UJA15007	H	H	ES SI	S 1E EMC	Y (1) Y (5)
SG#3 Common BD I-V Motor	30LCQ30AA003	30UJA11018	H	H	ES SI	S 1E EMC	Y (1) Y (5)
SG Transfer I-V 3<->4 Motor	30LCQ30AA012	30UJA23007	H	H	SII	NS-AQ EMC	Y (1) Y (5)
SG#3 BD Flowrate Control Valve Motor	30LCQ30AA104	30UJA11018	H	H	SII	NS-AQ EMC	Y (1) Y (5)
SG#3 Hotleg BD Sampling I-V Motor	30LCQ30AA601	30UJA15015	H	H	SII	NS-AQ EMC	Y (1) Y (5)
SG#3 Coldleg BD Sampling I-V Motor	30LCQ30AA602	30UJA15015	H	H	SII	NS-AQ EMC	Y (1) Y (5)

Table 3.11-1—List of Environmentally Qualified Electrical/I&C Equipment (Sheet 78 of 130)

Name Tag (Equipment Description)	Tag Number	Local Area KKS ID (Room Location)	EQ Environment (Note 1)	Radiation Environment Zone (Note 2)	EQ Designated Function (Note 3)			Safety Class (Note 4)			EQ Program Designation (Note 5)			
SG#4 Hot Leg BD I-V Motor	30LCQ40AA001	30UJA15008	H	H	ES		SI	S	1E	EMC	Y (1)		Y (5)	
SG#2 Cold Leg BD I-V Motor	30LCQ40AA002	30UJA15008	H	H	ES		SI	S	1E	EMC	Y (1)		Y (5)	
SG#4 Common BD I-V Motor	30LCQ40AA003	30UJA11018	H	H	ES		SI	S	1E	EMC	Y (1)		Y (5)	
SG#4 BD Flowrate Control Valve Motor	30LCQ40AA104	30UJA11018	H	H			SII	NS-AQ		EMC	Y (1)		Y (5)	
SG#4 Hot Leg BD Sampling I-V Motor	30LCQ40AA601	30UJA15016	H	H			SII	NS-AQ		EMC	Y (1)		Y (5)	
SG#4 Cold Leg BD Sampling I-V Motor	30LCQ40AA602	30UJA15016	H	H			SII	NS-AQ		EMC	Y (1)		Y (5)	
BD Demin Supply Inside C I-V Motor	30LCQ51AA002	30UJA07015	H	H	ES	PAM	SI	S	1E	EMC	Y (1)		Y (5)	
BD Demin Supply Outer C I-V Motor	30LCQ51AA003	34UJH05004	M	H	ES	PAM	SI	S	1E	EMC		Y (2)	Y (5)	Y (6)
Flash Tank Drain Valve Motor	30LCQ51AA401	30UJA07018	H	H			SII	NS-AQ		EMC	Y (1)		Y (5)	
BD Flashed Steam Inner C I-V Motor	30LCQ52AA001	30UJA34014	H	H	ES	PAM	SI	S	1E	EMC	Y (1)		Y (5)	
BD Flashed Steam Outer C I-V Motor	30LCQ52AA002	32UJE34003	M	M	ES	PAM	SI	S	1E	EMC			Y (5)	Y (6)
SG1 BD Flow Rate Sensor	30LCQ10CF001	30UJA11013	H	H			SII	NS-AQ		EMC	Y(1)		Y (5)	
Position of SG1 BD Flowrate Ctrl Valve	30LCQ10CG104	30UJA11018	H	H			SII	NS-AQ		EMC	Y(1)		Y (5)	
SG1 BD Temperature Sensor	30LCQ10CT001	30UJA11003	H	H			SII	NS-AQ		EMC	Y(1)		Y (5)	
SG2 BD Flow Rate Sensor	30LCQ20CF001	30UJA11005	H	H			SII	NS-AQ		EMC	Y(1)		Y (5)	
Position of SG2 BD Flowrate Ctrl Valve	30LCQ20CG104	30UJA11018	H	H			SII	NS-AQ		EMC	Y(1)		Y (5)	
SG2 BD Temperature Sensor	30LCQ20CT001	30UJA11014	H	H			SII	NS-AQ		EMC	Y(1)		Y (5)	
SG3 BD Flow Rate Sensor	30LCQ30CF001	30UJA11006	H	H			SII	NS-AQ		EMC	Y(1)		Y (5)	
Position of SG3 BD Flowrate Ctrl Valve	30LCQ30CG104	30UJA11018	H	H			SII	NS-AQ		EMC	Y(1)		Y (5)	
SG3 BD Temperature Sensor	30LCQ30CT001	30UJA11007	H	H			SII	NS-AQ		EMC	Y(1)		Y (5)	
SG4 BD Flow Rate Sensor	30LCQ40CF001	30UJA11008	H	H			SII	NS-AQ		EMC	Y(1)		Y (5)	
Position of SG4 BD Flowrate Ctrl Valve	30LCQ40CG104	30UJA11018	H	H			SII	NS-AQ		EMC	Y(1)		Y (5)	
SGBD Flash Tank Level Sensor 1	30LCQ50CL001	30UJA07018	H	H			SII	NS-AQ		EMC	Y(1)		Y (5)	
SGBD Flash Tank Level Sensor 2	30LCQ50CL002	30UJA07018	H	H			SII	NS-AQ		EMC	Y(1)		Y (5)	
SGBD Flash Tank Pressure Sensor 1	30LCQ50CP001	30UJA07018	H	H			SII	NS-AQ		EMC	Y(1)		Y (5)	
SGBD Flash Tank Pressure Sensor 2	30LCQ50CP002	30UJA07018	H	H			SII	NS-AQ		EMC	Y(1)		Y (5)	
Flash Tank Temperature Sensor	30LCQ51CT001	30UJA07018	H	H			SII	NS-AQ		EMC	Y(1)		Y (5)	
1st SGBD Cooler Outlet Temp Sensor #1	30LCQ51CT002	30UJA07018	H	H			SII	NS-AQ		EMC	Y(1)		Y (5)	
1st SGBD Cooler Outlet Temp Sensor #2	30LCQ51CT003	30UJA07018	H	H			SII	NS-AQ		EMC	Y(1)		Y (5)	
SGBD Flash Tank Drain Thermalwell	30LCQ51CT501	30UJA07018	H	H			SII	NS-AQ		EMC	Y(1)		Y (5)	
1st SGBD Cooler Outlet Thermalwell	30LCQ51CT502	30UJA07018	H	H			SII	NS-AQ		EMC	Y(1)		Y (5)	
Thermal Well Within 1st Sgbd Cooler	30LCQ51CT550	30UJA07018	H	H			SII	NS-AQ		EMC	Y(1)		Y (5)	
SGBD FT Safety Valve Position	30LCQ52CG191	30UJA11018	H	H			SII	NS-AQ		EMC	Y(1)		Y (5)	

Table 3.11-1—List of Environmentally Qualified Electrical/I&C Equipment (Sheet 79 of 130)

Name Tag (Equipment Description)	Tag Number	Local Area KKS ID (Room Location)	EQ Environment (Note 1)	Radiation Environment Zone (Note 2)	EQ Designated Function (Note 3)	Safety Class (Note 4)	EQ Program Designation (Note 5)
Temp Sensor Downstream SGBD FT Safety Valve	30LCQ52CT100	30UJA11018	H	H	SII	NS-AQ EMC	Y(1) Y (5)
Chemical & Volume Control System (CVCS)							
KBA							
RCS Pressure Boundary Isolation Valve Ac	30KBA10AA001	30UJA11002	H	H	SI	S 1E EMC	Y (1) Y (5)
RCS Pressure Boundary Isolation Valve Ac	30KBA10AA002	30UJA11022	H	H	SI	S 1E EMC	Y (1) Y (5)
Containment Isolation Valve Actuator	30KBA14AA002	30UJA07016	H	H	PAM SI	S 1E EMC	Y (1) Y (5)
Containment Isolation Valve Actuator	30KBA14AA003	30UFA06095	M	H	PAM SI	S 1E EMC	Y (2) Y (5) Y (6)
VCT Boron Dilution Isolation Valve Actua	30KBA21AA001	30UFA06086	M	H	SI	S 1E EMC	Y (2) Y (5) Y (6)
Charging Pump Suction Bor Dil Iso Vlv Ac	30KBA21AA009	30UFA06036	M	H	SI	S 1E EMC	Y (2) Y (5) Y (6)
Letdown Line Boron Dilution Iso Vlv Act	30KBA25AA017	30UFA10082	M	H	SI	S 1E EMC	Y (2) Y (5) Y (6)
Charging Outside Containment Isolation V	30KBA34AA002	30UFA06095	M	H	ES PAM SI	S 1E EMC	Y (2) Y (5) Y (6)
Charging Line Isolation Valve Actuator	30KBA34AA012	30UJA11022	H	H	SI	S 1E EMC	Y(1) Y (5)
Charging Header Flow Control Valve Actua	30KBA34AA101	30UFA01033	M	M	PAM SI	S 1E EMC	Y (5) Y (6)
Pressurizer Auxiliary Spray Isolation Va	30KBA35AA001	30UJA11022	H	H	SI	S 1E EMC	Y(1) Y (5)
#1 HP Reducing Station Control Valve Pos	30KBA11CG102	30UJA07028	H	H	SI	S 1E EMC	Y (1) Y (5)
#2 HP Reducing Station Control Valve Pos	30KBA12CG102	30UJA07029	H	H	SI	S 1E EMC	Y (1) Y (5)
Letdown Line Flow Transmitter	30KBA14CF751A	30UFA01084	M	H	SI	S 1E EMC	Y (2) Y (5) Y (6)
Letdown Line Flow Transmitter	30KBA14CF751B	30UFA01084	M	H	SI	S 1E EMC	Y (2) Y (5) Y (6)
Letdown Line Flow Transmitter	30KBA14CF752	30UFA01084	M	H	SI	S 1E EMC	Y (2) Y (5) Y (6)
LP Reducing Station Control Valve Positi	30KBA14CG106	30UFA06095	M	H	SI	S 1E EMC	Y (2) Y (5) Y (6)
VCT Level Transmitter	30KBA20CL750	30UFA10084	M	H	SI	S 1E EMC	Y (2) Y (5) Y (6)
VCT Level Transmitter	30KBA20CL751	30UFA06084	M	H	SI	S 1E EMC	Y (2) Y (5) Y (6)
VCT Level Transmitter	30KBA20CL752	30UFA10084	M	H	SI	S 1E EMC	Y (2) Y (5) Y (6)
Charging Pump Discharge Flow Transmitter	30KBA34CF851A	30UFA01033	M	H	SI	S 1E EMC	Y (2) Y (5) Y (6)
Charging Pump Discharge Flow Transmitter	30KBA34CF851B	30UFA01033	M	H	SI	S 1E EMC	Y (2) Y (5) Y (6)
Charging Pump Discharge Flow Transmitter	30KBA34CF852A	30UFA01033	M	H	SI	S 1E EMC	Y (2) Y (5) Y (6)
Charging Pump Discharge Flow Transmitter	30KBA34CF852B	30UFA01033	M	H	SI	S 1E EMC	Y (2) Y (5) Y (6)
Boron Concentration Measurement Transmit	30KBA34CQ857A	30UFA01033	M	H	SI	S 1E EMC	Y (2) Y (5) Y (6)
Boron Concentration Measurement Transmit	30KBA34CQ857B	30UFA01033	M	H	SI	S 1E EMC	Y (2) Y (5) Y (6)
Boron Concentration Measurement Transmit	30KBA34CQ858A	30UFA01033	M	H	SI	S 1E EMC	Y (2) Y (5) Y (6)
Boron Concentration Measurement Transmit	30KBA34CQ858B	30UFA01033	M	H	SI	S 1E EMC	Y (2) Y (5) Y (6)

Table 3.11-1—List of Environmentally Qualified Electrical/I&C Equipment (Sheet 80 of 130)

Name Tag (Equipment Description)	Tag Number	Local Area KKS ID (Room Location)	EQ Environment (Note 1)	Radiation Environment Zone (Note 2)	EQ Designated Function (Note 3)			Safety Class (Note 4)			EQ Program Designation (Note 5)			
Charging Pump Discharge Temperature Tran	30KBA34CT857A	30UFA01033	M	H			SI	S	1E	EMC		Y (2)	Y (5)	Y (6)
Charging Pump Discharge Temperature Tran	30KBA34CT857B	30UFA01033	M	H			SI	S	1E	EMC		Y (2)	Y (5)	Y (6)
Charging Pump Discharge Temperature Tran	30KBA34CT858A	30UFA01033	M	H			SI	S	1E	EMC		Y (2)	Y (5)	Y (6)
Charging Pump Discharge Temperature Tran	30KBA34CT858B	30UFA01033	M	H			SI	S	1E	EMC		Y (2)	Y (5)	Y (6)
JEW														
RCP Seal Water Injection Outside Cont. I	30JEW01AA005	30UFA06045	M	H	ES	PAM	SI	S	1E	EMC		Y (2)	Y (5)	Y (6)
RCP Seal Water Leakoff Inside Containmen	30JEW50AA001	30UJA07016	H	H	ES	PAM	SI	S	1E	EMC	Y (1)		Y (5)	
RCP Seal Water Leakoff Outside Containme	30JEW50AA002	30UFA06045	M	H	ES	PAM	SI	S	1E	EMC		Y (2)	Y (5)	Y (6)
AUXILIARY SYSTEMS														
Nuclear Sampling System (NSS)														
RCS HL1 Iso Vlv Actuator	30KUA10AA002	30UJA18003	H	H			SI	S	1E	EMC	Y (1)		Y (5)	
RCS HL1 Inner Cont Iso Vlv Actuator	30KUA10AA003	30UJA07016	H	H	ES	PAM	SI	S	1E	EMC	Y (1)		Y (5)	
RCS HL1 Outer Iso Cont Vlv Actuator	30KUA10AA004	30UFA06045	M	H	ES	PAM	SI	S	1E	EMC		Y (2)	Y (5)	Y (6)
Pressurizer Sample Vlv Actuator	30KUA20AA001	30UJB05003	M	M			SI	S	1E	EMC			Y (5)	Y (6)
Pressurizer Inner Cont Iso Vlv Actuator	30KUA20AA002	30UJB05003	M	M	ES	PAM	SI	S	1E	EMC			Y (5)	Y (6)
Pressurizer Outer Iso Cont Vlv Actuator	30KUA20AA003	30UFA06095	M	H	ES	PAM	SI	S	1E	EMC		Y (2)	Y (5)	Y (6)
RCS CL3 ISo Vlv Actuator	30KUA30AA002	30UJB05003	M	M			SI	S	1E	EMC			Y (5)	Y (6)
RCS CL3 Inner Cont Iso Vlv Actuator	30KUA30AA003	30UJB05003	M	M	ES	PAM	SI	S	1E	EMC			Y (5)	Y (6)
RCS CL3 Outer Cont Iso Vlv Actuator	30KUA30AA004	30UFA06095	M	H	ES	PAM	SI	S	1E	EMC		Y (2)	Y (5)	Y (6)
Inner Cont Iso Vlv Actuator	30KUB10AA001	30UJA11016	H	H	ES	PAM	SI	S	1E	EMC	Y (1)		Y (5)	
Outer Cont Iso Vlv Actuator	30KUB10AA002	30UFA10095	M	H	ES	PAM	SI	S	1E	EMC		Y (2)	Y (5)	Y (6)
Cont Iso Vlv Outside Cont Actuator	30KUL51AA002	34UJH10004	M	H	ES	PAM	SI	S	1E	EMC		Y (2)	Y (5)	Y (6)
Cont Iso Vlv Cont Atmo Actuator	30KUL51AA003	34UJH10004	M	H	ES	PAM	SI	S	1E	EMC		Y (2)	Y (5)	Y (6)
Cont Iso Vlv Actuator	30KUL52AA002	34UJH10004	M	H	ES	PAM	SI	S	1E	EMC		Y (2)	Y (5)	Y (6)
Cont Iso Vlv Actuator	30KUL52AA003	34UJH10004	M	H	ES	PAM	SI	S	1E	EMC		Y (2)	Y (5)	Y (6)
Sampling Activity Monitoring Systems (SAMS)														
Containment Ventilation System Gamma Activity Monitor	30KLK13CR001	30UFA24095	M	H			SII	NS-AQ		EMC		Y (2)	Y (5)	Y (6)
Containment Ventilation System Gamma Activity Monitor	30KLK13CR002	30UFA24095	M	H			SII	NS-AQ		EMC		Y (2)	Y (5)	Y (6)
Annulus Ventilation System Gamma Activity Monitor	30KLK21CR001	30UFA24045	M	H		PAM	SI	NS-AQ		EMC		Y (2)	Y (5)	Y (6)

Table 3.11-1—List of Environmentally Qualified Electrical/I&C Equipment (Sheet 81 of 130)

Name Tag (Equipment Description)	Tag Number	Local Area KKS ID (Room Location)	EQ Environment (Note 1)	Radiation Environment Zone (Note 2)	EQ Designated Function (Note 3)	Safety Class (Note 4)	EQ Program Designation (Note 5)
Annulus Ventilation System Gamma Activity Monitor	30KLK21CR002	30UFA24045	M	H	PAM SI	NS-AQ EMC	Y (2) Y (5) Y (6)
Safeguard Building Controlled-Area Ventilation System Gamma Activity Monitor	30KLK37CR001	30UFA	M	H	PAM SII	NS-AQ EMC	Y (2) Y (5) Y (6)
Safeguard Building Controlled-Area Ventilation System Gamma Activity Monitor	30KLK37CR002	30UFA	M	H	PAM SII	NS-AQ EMC	Y (2) Y (5) Y (6)
Fuel Bldg Ventilation System Gamma Activity Monitor	30KLK38CR001	30UFA29015	M	H	SII	NS-AQ EMC	Y (2) Y (5) Y (6)
Fuel Bldg Ventilation System Gamma Activity Monitor	30KLK38CR002	30UFA29015	M	H	SII	NS-AQ EMC	Y (2) Y (5) Y (6)
Main Control Room Vent Duct Gamma Activity Monitor	30KLK65CR001	32UJK31018	M	M	ES SI	S 1E EMC	Y (5) Y (6)
Main Control Room Vent Duct Gamma Activity Monitor	30KLK65CR002	32UJK31018	M	M	ES SI	S 1E EMC	Y (5) Y (6)
Main Control Room Vent Duct Gamma Activity Monitor	30KLK66CR001	32UJK31018	M	M	ES SI	S 1E EMC	Y (5) Y (6)
Main Control Room Vent Duct Gamma Activity Monitor	30KLK66CR002	32UJK31018	M	M	ES SI	S 1E EMC	Y (5) Y (6)
Emergency Diesel Generator Set (EDG)							
Cooling Water System Valve Actuators	30XJG10AA	31UBP01001	M	M	SI	S 1E EMC	Y (5) Y (6)
Cooling Water System Valve Actuators	30XJG20AA	32UBP01001	M	M	SI	S 1E EMC	Y (5) Y (6)
Cooling Water System Valve Actuators	30XJG30AA	33UBP01001	M	M	SI	S 1E EMC	Y (5) Y (6)
Cooling Water System Valve Actuators	30XJG40AA	34UBP01001	M	M	SI	S 1E EMC	Y (5) Y (6)
Fuel Oil System Valve Actuators	30XJN10AA	31UBP01001	M	M	SI	S 1E EMC	Y (5) Y (6)
Fuel Oil System Pump Motors	30XJN10AP	31UBP01001	M	M	SI	S 1E EMC	Y (5) Y (6)
Fuel Oil System Valve Actuators	30XJN20AA	32UBP01001	M	M	SI	S 1E EMC	Y (5) Y (6)
Fuel Oil System Pump Motors	30XJN20AP	32UBP01001	M	M	SI	S 1E EMC	Y (5) Y (6)
Fuel Oil System Valve Actuators	30XJN30AA	33UBP01001	M	M	SI	S 1E EMC	Y (5) Y (6)
Fuel Oil System Pump Motors	30XJN30AP	33UBP01001	M	M	SI	S 1E EMC	Y (5) Y (6)
Fuel Oil System Valve Actuators	30XJN40AA	34UBP01001	M	M	SI	S 1E EMC	Y (5) Y (6)
Fuel Oil System Pump Motors	30XJN40AP	34UBP01001	M	M	SI	S 1E EMC	Y (5) Y (6)
Combustion Air System Valve Actuators	30XJQ10AA	31UBP01001	M	M	SI	S 1E EMC	Y (5) Y (6)
Combustion Air System Valve Actuators	30XJQ20AA	32UBP01001	M	M	SI	S 1E EMC	Y (5) Y (6)
Combustion Air System Valve Actuators	30XJQ30AA	33UBP01001	M	M	SI	S 1E EMC	Y (5) Y (6)

Table 3.11-1—List of Environmentally Qualified Electrical/I&C Equipment (Sheet 82 of 130)

Name Tag (Equipment Description)	Tag Number	Local Area KKS ID (Room Location)	EQ Environment (Note 1)	Radiation Environment Zone (Note 2)	EQ Designated Function (Note 3)	Safety Class (Note 4)	EQ Program Designation (Note 5)
Combustion Air System Valve Actuators	30XJQ40AA	34UBP01001	M	M	SI	S 1E EMC	Y (5) Y (6)
Exhaust Gas System Valve Actuators	30XJR10AA	31UBP01001	M	M	SI	S 1E EMC	Y (5) Y (6)
Exhaust Gas System Valve Actuators	30XJR20AA	32UBP01001	M	M	SI	S 1E EMC	Y (5) Y (6)
Exhaust Gas System Valve Actuators	30XJR30AA	33UBP01001	M	M	SI	S 1E EMC	Y (5) Y (6)
Exhaust Gas System Valve Actuators	30XJR40AA	34UBP01001	M	M	SI	S 1E EMC	Y (5) Y (6)
Lube Oil System Valve Actuators	30XJV10AA	31UBP01001	M	M	SI	S 1E EMC	Y (5) Y (6)
Lube Oil System Valve Actuators	30XJV20AA	32UBP01001	M	M	SI	S 1E EMC	Y (5) Y (6)
Lube Oil System Valve Actuators	30XJV30AA	33UBP01001	M	M	SI	S 1E EMC	Y (5) Y (6)
Lube Oil System Valve Actuators	30XJV40AA	34UBP01001	M	M	SI	S 1E EMC	Y (5) Y (6)
Starting Air System Valve Actuators	30XJX10AA	31UBP01001	M	M	SI	S 1E EMC	Y (5) Y (6)
Starting Air System Valve Actuators	30XJX20AA	32UBP01001	M	M	SI	S 1E EMC	Y (5) Y (6)
Starting Air System Valve Actuators	30XJX30AA	33UBP01001	M	M	SI	S 1E EMC	Y (5) Y (6)
Starting Air System Valve Actuators	30XJX40AA	34UBP01001	M	M	SI	S 1E EMC	Y (5) Y (6)
Ac Synchronous Generator Electrical	30XKA10AG	31UBP01001	M	M	SI	S 1E EMC	Y (5) Y (6)
Ac Synchronous Generator Electrical	30XKA20AG	32UBP01001	M	M	SI	S 1E EMC	Y (5) Y (6)
Ac Synchronous Generator Electrical	30XKA30AG	33UBP01001	M	M	SI	S 1E EMC	Y (5) Y (6)
Ac Synchronous Generator Electrical	30XKA40AG	34UBP01001	M	M	SI	S 1E EMC	Y (5) Y (6)
Combustible Gas Control System (CGCS)							
H2 Mixing Damper 01	30JMT20AA001	30UJA07015	H	H	ES SI	S 1E EMC	Y(1) Y(5)
H2 Mixing Damper 02	30JMT20AA002	30UJA07015	H	H	ES SI	S 1E EMC	Y(1) Y(5)
H2 Mixing Damper 03	30JMT20AA003	30UJA07015	H	H	ES SI	S 1E EMC	Y(1) Y(5)
H2 Mixing Damper 04	30JMT20AA004	30UJA07015	H	H	ES SI	S 1E EMC	Y(1) Y(5)
H2 Mixing Damper 05	30JMT20AA005	30UJA07014	H	H	ES SI	S 1E EMC	Y(1) Y(5)
H2 Mixing Damper 06	30JMT20AA006	30UJA07014	H	H	ES SI	S 1E EMC	Y(1) Y(5)
H2 Mixing Damper 07	30JMT20AA007	30UJA07014	H	H	ES SI	S 1E EMC	Y(1) Y(5)
H2 Mixing Damper 08	30JMT20AA008	30UJA07014	H	H	ES SI	S 1E EMC	Y(1) Y(5)
H2 Mixing Damper 01 – Open (M)	30JMT20CG001A	30UJA07015	H	H	ES SI	S 1E EMC	Y(1) Y(5)
H2 Mixing Damper 01 – Closed (M)	30JMT20CG001B	30UJA07015	H	H	ES SI	S 1E EMC	Y(1) Y(5)
H2 Mixing Damper 02 – Open (M)	30JMT20CG002A	30UJA07015	H	H	ES SI	S 1E EMC	Y(1) Y(5)
H2 Mixing Damper 02 – Closed (M)	30JMT20CG002B	30UJA07015	H	H	ES SI	S 1E EMC	Y(1) Y(5)
H2 Mixing Damper 03 – Open (M)	30JMT20CG003A	30UJA07015	H	H	ES SI	S 1E EMC	Y(1) Y(5)
H2 Mixing Damper 03 – Closed (M)	30JMT20CG003B	30UJA07015	H	H	ES SI	S 1E EMC	Y(1) Y(5)
H2 Mixing Damper 04 – Open (M)	30JMT20CG004A	30UJA07015	H	H	ES SI	S 1E EMC	Y(1) Y(5)

Table 3.11-1—List of Environmentally Qualified Electrical/I&C Equipment (Sheet 83 of 130)

Name Tag (Equipment Description)	Tag Number	Local Area KKS ID (Room Location)	EQ Environment (Note 1)	Radiation Environment Zone (Note 2)	EQ Designated Function (Note 3)	Safety Class (Note 4)	EQ Program Designation (Note 5)
H2 Mixing Damper 04 – Closed (M)	30JMT20CG004B	30UJA07015	H	H	ES SI	S 1E EMC	Y(1) Y(5)
H2 Mixing Damper 05 – Open (M)	30JMT20CG005A	30UJA07014	H	H	ES SI	S 1E EMC	Y(1) Y(5)
H2 Mixing Damper 05 – Closed (M)	30JMT20CG005B	30UJA07014	H	H	ES SI	S 1E EMC	Y(1) Y(5)
H2 Mixing Damper 06 – Open (M)	30JMT20CG006A	30UJA07014	H	H	ES SI	S 1E EMC	Y(1) Y(5)
H2 Mixing Damper 06 – Closed (M)	30JMT20CG006B	30UJA07014	H	H	ES SI	S 1E EMC	Y(1) Y(5)
H2 Mixing Damper 07 – Open (M)	30JMT20CG007A	30UJA07014	H	H	ES SI	S 1E EMC	Y(1) Y(5)
H2 Mixing Damper 07 – Closed (M)	30JMT20CG007B	30UJA07014	H	H	ES SI	S 1E EMC	Y(1) Y(5)
H2 Mixing Damper 08 – Open (M)	30JMT20CG008A	30UJA07014	H	H	ES SI	S 1E EMC	Y(1) Y(5)
H2 Mixing Damper 08 – Closed (M)	30JMT20CG008B	30UJA07014	H	H	ES SI	S 1E EMC	Y(1) Y(5)
Delta Pressure 1 – Two Room Containment	30JMT20CP001	30UJA34003	H	H	ES SI	S 1E EMC	Y(1) Y(5)
Delta Pressure 2 – Two Room Containment	30JMT20CP002	30UJA34003	H	H	ES SI	S 1E EMC	Y(1) Y(5)
Delta Pressure 3 – Two Room Containment	30JMT20CP003	30UJA34004	H	H	ES SI	S 1E EMC	Y(1) Y(5)
Delta Pressure 4 – Two Room Containment	30JMT20CP004	30UJA34004	H	H	ES SI	S 1E EMC	Y(1) Y(5)
Delta Pressure 5 – Two Room Containment	30JMT20CP005	30UJA34007	H	H	ES SI	S 1E EMC	Y(1) Y(5)
Delta Pressure 6 – Two Room Containment	30JMT20CP006	30UJA34007	H	H	ES SI	S 1E EMC	Y(1) Y(5)
Delta Pressure 7 – Two Room Containment	30JMT20CP007	30UJA34008	H	H	ES SI	S 1E EMC	Y(1) Y(5)
Delta Pressure 8 – Two Room Containment	30JMT20CP008	30UJA34008	H	H	ES SI	S 1E EMC	Y(1) Y(5)
ELECTRICAL SYSTEMS							
Class 1E Uninterruptible Power Supply (EUPS)							
31BGA01 120 V Panelboard	31BGA01GW001	31UJK18026	M	M	RT ES PAM SI	S 1E EMC	Y (5) Y (6)
31BGT01 480 V to 120 V Transformer	31BGT01GW001	31UJK18026	M	M	RT ES PAM SI	S 1E EMC	Y (5) Y (6)
31BRA 480 V Bus (MCC)	31BRA00GW001	31UJK18026	M	M	RT ES PAM SI	S 1E EMC	Y (5) Y (6)
31BRU01 Inverter	31BRU01GU001	31UJK18030	M	M	RT ES PAM SI	S 1E EMC	Y (5) Y (6)
31BRW10 AC/DC Converter	31BRW10GR001	31UJK18025	M	M	RT ES PAM SI	S 1E EMC	Y (5) Y (6)
31BRW12 AC/DC Converter	31BRW12GR001	31UJK18025	M	M	RT ES PAM SI	S 1E EMC	Y (5) Y (6)
31BRW16 AC/DC Converter	31BRW16GR001	31UBP10002	M	M	RT ES PAM SI	S 1E EMC	Y (5) Y (6)
31BTD01 Battery	31BTD01GR001	31UJK14028	M	M	RT ES PAM SI	S 1E EMC	Y (5) Y (6)
31BTP01 Battery Charger	31BTP01GR001	31UJK18030	M	M	RT ES PAM SI	S 1E EMC	Y (5) Y (6)
31BTP02 Battery Charger	31BTP02GR001	31UJK18030	M	M	RT ES PAM SI	S 1E EMC	Y (5) Y (6)
31BUC 250 VDC Bus (Switchboard)	31BUC00GW001	31UJK18030	M	M	RT ES PAM SI	S 1E EMC	Y (5) Y (6)
31BUW11 DC/DC Converter	31BUW11GR001	31UJK18025	M	M	RT ES PAM SI	S 1E EMC	Y (5) Y (6)
31BUW13 DC/DC Converter	31BUW13GR001	31UJK18025	M	M	RT ES PAM SI	S 1E EMC	Y (5) Y (6)

Table 3.11-1—List of Environmentally Qualified Electrical/I&C Equipment (Sheet 84 of 130)

Name Tag (Equipment Description)	Tag Number	Local Area KKS ID (Room Location)	EQ Environment (Note 1)	Radiation Environment Zone (Note 2)	EQ Designated Function (Note 3)	Safety Class (Note 4)	EQ Program Designation (Note 5)
31BUW16 DC/DC Converter	31BUW16GR001	31UBP10002	M	M	RT ES PAM SI	S 1E EMC	Y (5) Y (6)
32BGA01 120 V Panelboard	32BGA01GW001	32UJK18029	M	M	RT ES PAM SI	S 1E EMC	Y (5) Y (6)
32BGT01 480 V to 120 V Transformer	32BGT01GW001	32UJK18029	M	M	RT ES PAM SI	S 1E EMC	Y (5) Y (6)
32BRA 480 V Bus (MCC)	32BRA00GW001	32UJK18029	M	M	RT ES PAM SI	S 1E EMC	Y (5) Y (6)
32BRU01 Inverter	32BRU01GU001	32UJK22029	M	M	RT ES PAM SI	S 1E EMC	Y (5) Y (6)
32BRW30 AC/DC Converter	32BRW30GR001	32UJK18029	M	M	RT ES PAM SI	S 1E EMC	Y (5) Y (6)
32BRW32 AC/DC Converter	32BRW32GR001	32UJK18029	M	M	RT ES PAM SI	S 1E EMC	Y (5) Y (6)
32BRW36 AC/DC Converter	32BRW36GR001	32UBP10002	M	M	RT ES PAM SI	S 1E EMC	Y (5) Y (6)
32BTD01 Battery	32BTD01GR001	32UJK22028	M	M	RT ES PAM SI	S 1E EMC	Y (5) Y (6)
32BTP01 Battery Charger	32BTP01GR001	32UJK22029	M	M	RT ES PAM SI	S 1E EMC	Y (5) Y (6)
32BTP02 Battery Charger	32BTP02GR001	32UJK22029	M	M	RT ES PAM SI	S 1E EMC	Y (5) Y (6)
32BUC 250 VDC Bus (Switchboard)	32BUC00GW001	32UJK22029	M	M	RT ES PAM SI	S 1E EMC	Y (5) Y (6)
32BUW31 DC/DC Converter	32BUW31GR001	32UJK18029	M	M	RT ES PAM SI	S 1E EMC	Y (5) Y (6)
32BUW33 DC/DC Converter	32BUW33GR001	32UJK18029	M	M	RT ES PAM SI	S 1E EMC	Y (5) Y (6)
32BUW36 DC/DC Converter	32BUW36GR001	32UBP10002	M	M	RT ES PAM SI	S 1E EMC	Y (5) Y (6)
33BGA01 120 V Panelboard	33BGA01GW001	33UJK18029	M	M	RT ES PAM SI	S 1E EMC	Y (5) Y (6)
33BGT01 480 V to 120 V Transformer	33BGT01GW001	33UJK18029	M	M	RT ES PAM SI	S 1E EMC	Y (5) Y (6)
33BRA 480 V Bus (MCC)	33BRA00GW001	33UJK18029	M	M	RT ES PAM SI	S 1E EMC	Y (5) Y (6)
33BRU01 Inverter	33BRU01GU001	33UJK22029	M	M	RT ES PAM SI	S 1E EMC	Y (5) Y (6)
33BRW50 AC/DC Converter	33BRW50GR001	33UJK18029	M	M	RT ES PAM SI	S 1E EMC	Y (5) Y (6)
33BRW52 AC/DC Converter	33BRW52GR001	33UJK18029	M	M	RT ES PAM SI	S 1E EMC	Y (5) Y (6)
33BRW56 AC/DC Converter	33BRW56GR001	33UBP10002	M	M	RT ES PAM SI	S 1E EMC	Y (5) Y (6)
33BTD01 Battery	33BTD01GR001	33UJK22028	M	M	RT ES PAM SI	S 1E EMC	Y (5) Y (6)
33BTP01 Battery Charger	33BTP01GR001	33UJK22029	M	M	RT ES PAM SI	S 1E EMC	Y (5) Y (6)
33BTP02 Battery Charger	33BTP02GR001	33UJK22029	M	M	RT ES PAM SI	S 1E EMC	Y (5) Y (6)
33BUC 250 VDC Bus (Switchboard)	33BUC00GW001	33UJK22029	M	M	RT ES PAM SI	S 1E EMC	Y (5) Y (6)
33BUW51 DC/DC Converter	33BUW51GR001	33UJK18029	M	M	RT ES PAM SI	S 1E EMC	Y (5) Y (6)
33BUW53 DC/DC Converter	33BUW53GR001	33UJK18029	M	M	RT ES PAM SI	S 1E EMC	Y (5) Y (6)
33BUW56 DC/DC Converter	33BUW56GR001	33UBP10002	M	M	RT ES PAM SI	S 1E EMC	Y (5) Y (6)
34BGA01 120 V Panelboard	34BGA01GW001	34UJK18026	M	M	RT ES PAM SI	S 1E EMC	Y (5) Y (6)
34BGT01 480 V to 120 V Transformer	34BGT01GW001	34UJK18026	M	M	RT ES PAM SI	S 1E EMC	Y (5) Y (6)
34BRA 480 V Bus (MCC)	34BRA00GW001	34UJK18026	M	M	RT ES PAM SI	S 1E EMC	Y (5) Y (6)
34BRU01 Inverter	34BRU01GU001	34UJK18030	M	M	RT ES PAM SI	S 1E EMC	Y (5) Y (6)

Table 3.11-1—List of Environmentally Qualified Electrical/I&C Equipment (Sheet 85 of 130)

Name Tag (Equipment Description)	Tag Number	Local Area KKS ID (Room Location)	EQ Environment (Note 1)	Radiation Environment Zone (Note 2)	EQ Designated Function (Note 3)				Safety Class (Note 4)			EQ Program Designation (Note 5)	
34BRW70 AC/DC Converter	34BRW70GR001	34UJK18025	M	M	RT	ES	PAM	SI	S	1E	EMC	Y (5)	Y (6)
34BRW72 AC/DC Converter	34BRW72GR001	34UJK18025	M	M	RT	ES	PAM	SI	S	1E	EMC	Y (5)	Y (6)
34BRW76 AC/DC Converter	34BRW76GR001	34UBP10002	M	M	RT	ES	PAM	SI	S	1E	EMC	Y (5)	Y (6)
34BTD01 Battery	34BTD01GR001	34UJK14028	M	M	RT	ES	PAM	SI	S	1E	EMC	Y (5)	Y (6)
34BTP01 Battery Charger	34BTP01GR001	34UJK18030	M	M	RT	ES	PAM	SI	S	1E	EMC	Y (5)	Y (6)
34BTP02 Battery Charger	34BTP02GR001	34UJK18030	M	M	RT	ES	PAM	SI	S	1E	EMC	Y (5)	Y (6)
34BUC 250 VDC Bus (Switchboard)	34BUC00GW001	34UJK18030	M	M	RT	ES	PAM	SI	S	1E	EMC	Y (5)	Y (6)
34BUW71 DC/DC Converter	34BUW71GR001	34UJK18025	M	M	RT	ES	PAM	SI	S	1E	EMC	Y (5)	Y (6)
34BUW73 DC/DC Converter	34BUW73GR001	34UJK18025	M	M	RT	ES	PAM	SI	S	1E	EMC	Y (5)	Y (6)
34BUW76 DC/DC Converter	34BUW76GR001	34UBP10002	M	M	RT	ES	PAM	SI	S	1E	EMC	Y (5)	Y (6)
Emergency Power Supply (EPSS)													
31BDA 6.9 kV Bus (Switchgear)	31BDA01GS0	31UJK18026	M	M	RT	ES	PAM	SI	S	1E	EMC	Y (5)	Y (6)
31BDB 6.9 kV Bus (Switchgear)	31BDB01GS0	31UJK18026	M	M	RT	ES		SI	S	1E	EMC	Y (5)	Y (6)
31BDC 6.9 kV Bus (Switchgear)	31BDC01GS0	31UJK18026	M	M	RT	ES		SI	S	1E	EMC	Y (5)	Y (6)
31BDD 6.9 kV Bus (Switchgear)	31BDD01GS0	31UQB02001	M	M				SI	S	1E	EMC	Y (5)	Y (6)
31BMB 480 V Bus (Load Center)	31BMB01GS0	31UJK18026	M	M	RT	ES		SI	S	1E	EMC	Y (5)	Y (6)
31BMC 480 V Bus (Load Center)	31BMC01GS0	31UJK18026	M	M	RT	ES		SI	S	1E	EMC	Y (5)	Y (6)
31BMD 480 V Bus (Load Center)	31BMD01GS0	31UQB02001	M	M				SI	S	1E	EMC	Y (5)	Y (6)
31BMT01 6.9 kV to 480 V (XFMR)	31BMT01GT0	31UJK18026	M	M				SI	S	1E	EMC	Y (5)	Y (6)
31BMT02 6.9 kV to 480 V (XFMR)	31BMT02GT0	31UJK18026	M	M	RT	ES		SI	S	1E	EMC	Y (5)	Y (6)
31BMT03 6.9 kV to 480 V (XFMR)	31BMT03GT0	31UJK18026	M	M	RT	ES		SI	S	1E	EMC	Y (5)	Y (6)
31BMT04 6.9 kV to 480 V (XFMR)	31BMT04GT0	31UQB02001	M	M				SI	S	1E	EMC	Y (5)	Y (6)
31BNA01 480 V Bus (MCC)	31BNA01GW0	31UBP05003	M	M				SI	S	1E	EMC	Y (5)	Y (6)
31BNB01 480 V Bus (MCC)	31BNB01GW0	31UJK18026	M	M		ES		SI	S	1E	EMC	Y (5)	Y (6)
31BNB02 480 V Bus (MCC)	31BNB02GW0	31UJK18026	M	M		ES		SI	S	1E	EMC	Y (5)	Y (6)
31BNB03 480 V Bus (MCC)	31BNB03GW0	31UJK18026	M	M		ES		SI	S	1E	EMC	Y (5)	Y (6)
31BNC01 480 V Bus (MCC)	31BNC01GW0	31UJK18026	M	M				SI	S	1E	EMC	Y (5)	Y (6)
31BND01 480 V Bus (MCC)	31BND01GW0	31UQB02001	M	M				SI	S	1E	EMC	Y (5)	Y (6)
31BNT01 480V to 480 V (Reg. XFMR)	31BNT01GT0	31UJK18026	M	M	RT	ES		SI	S	1E	EMC	Y (5)	Y (6)
32BDA 6.9 kV Bus (Switchgear)	32BDA01GS0	32UJK18020	M	M	RT	ES	PAM	SI	S	1E	EMC	Y (5)	Y (6)
32BDB 6.9 kV Bus (Switchgear)	32BDB01GS0	32UJK18020	M	M	RT	ES		SI	S	1E	EMC	Y (5)	Y (6)
32BDD 6.9 kV Bus (Switchgear)	32BDD01GS0	32UQB02001	M	M	RT	ES		SI	S	1E	EMC	Y (5)	Y (6)
32BMB 480 V Bus (Load Center)	32BMB01GS0	32UJK18020	M	M	RT	ES		SI	S	1E	EMC	Y (5)	Y (6)

Table 3.11-1—List of Environmentally Qualified Electrical/I&C Equipment (Sheet 86 of 130)

Name Tag (Equipment Description)	Tag Number	Local Area KKS ID (Room Location)	EQ Environment (Note 1)	Radiation Environment Zone (Note 2)	EQ Designated Function (Note 3)				Safety Class (Note 4)			EQ Program Designation (Note 5)	
32BMD 480 V Bus (Load Center)	32BMD01GS0	32UQB02001	M	M				SI	S	1E	EMC	Y (5)	Y (6)
32BMT01 6.9 kV to 480 V Bus (XFMR)	32BMT01GT0	32UJK18020	M	M	RT	ES		SI	S	1E	EMC	Y (5)	Y (6)
32BMT02 6.9 kV to 480 V Bus (XFMR)	32BMT02GT0	32UJK18020	M	M	RT	ES		SI	S	1E	EMC	Y (5)	Y (6)
32BMT04 6.9 kV to 480 V Bus (XFMR)	32BMT04GT0	32UQB02001	M	M				SI	S	1E	EMC	Y (5)	Y (6)
32BNA01 480 V Bus (MCC)	32BNA01GW0	32UBP05003	M	M				SI	S	1E	EMC	Y (5)	Y (6)
32BNA02 480 V Bus (MCC)	32BNA02GW0	32UJK18020	M	M				SI	S	1E	EMC	Y (5)	Y (6)
32BNB01 480 V Bus (MCC)	32BNB01GW0	32UJK18020	M	M				SI	S	1E	EMC	Y (5)	Y (6)
32BNB02 480 V Bus (MCC)	32BNB02GW0	32UJK18020	M	M		ES		SI	S	1E	EMC	Y (5)	Y (6)
32BNB03 480 V Bus (MCC)	32BNB03GW0	32UJK18020	M	M		ES		SI	S	1E	EMC	Y (5)	Y (6)
32BND01 480 V Bus (MCC)	32BND01GW0	32UQB02001	M	M				SI	S	1E	EMC	Y (5)	Y (6)
32BNT01 480V to 480 V (Reg. XFMR)	32BNT01GT0	32UJK18020	M	M	RT	ES		SI	S	1E	EMC	Y (5)	Y (6)
32BMT03 6.9 kV to 480 V Bus (XFMR)	32MBT03GT0	32UJK18020	M	M	RT	ES		SI	S	1E	EMC	Y (5)	Y (6)
33BDA 6.9 kV Bus (Switchgear)	33BDA01GS0	33UJK18020	M	M	RT	ES	PAM	SI	S	1E	EMC	Y (5)	Y (6)
33BDB 6.9 kV Bus (Switchgear)	33BDB01GS0	33UJK18020	M	M	RT	ES		SI	S	1E	EMC	Y (5)	Y (6)
33BDD 6.9 kV Bus (Switchgear)	33BDD01GS0	33UQB02001	M	M	RT	ES		SI	S	1E	EMC	Y (5)	Y (6)
33BMB 480 V Bus (Load Center)	33BMB01GS0	33UJK18020	M	M	RT	ES		SI	S	1E	EMC	Y (5)	Y (6)
33BMD 480 V Bus (Load Center)	33BMD01GS0	33UQB02001	M	M				SI	S	1E	EMC	Y (5)	Y (6)
33BMT01 6.9 kV to 480 V Bus (XFMR)	33BMT01GT0	33UJK18020	M	M	RT	ES		SI	S	1E	EMC	Y (5)	Y (6)
33BMT02 6.9 kV to 480 V Bus (XFMR)	33BMT02GT0	33UJK18020	M	M	RT	ES		SI	S	1E	EMC	Y (5)	Y (6)
33BMT03 6.9 kV to 480 V Bus (XFMR)	33BMT03GT0	33UJK18020	M	M	RT	ES		SI	S	1E	EMC	Y (5)	Y (6)
33BMT04 6.9 kV to 480 V Bus (XFMR)	33BMT04GT0	33UQB02001	M	M				SI	S	1E	EMC	Y (5)	Y (6)
33BNA01 480 V Bus (MCC)	33BNA01GW0	33UBP05003	M	M				SI	S	1E	EMC	Y (5)	Y (6)
33BNA02 480 V Bus (MCC)	33BNA02GW0	33UJK18020	M	M				SI	S	1E	EMC	Y (5)	Y (6)
33BNB01 480 V Bus (MCC)	33BNB01GW0	33UJK18020	M	M				SI	S	1E	EMC	Y (5)	Y (6)
33BNB02 480 V Bus (MCC)	33BNB02GW0	33UJK18020	M	M		ES		SI	S	1E	EMC	Y (5)	Y (6)
33BNB03 480 V Bus (MCC)	33BNB03GW0	33UJK18020	M	M		ES		SI	S	1E	EMC	Y (5)	Y (6)
33BND01 480 V Bus (MCC)	33BND01GW0	33UQB02001	M	M				SI	S	1E	EMC	Y (5)	Y (6)
33BNT01 480V to 480 V (Reg. XFMR)	33BNT01GT0	33UJK18020	M	M	RT	ES		SI	S	1E	EMC	Y (5)	Y (6)
34BDA 6.9 kV Bus (Switchgear)	34BDA01GS0	34UJK18026	M	M	RT	ES	PAM	SI	S	1E	EMC	Y (5)	Y (6)
34BDB 6.9 kV Bus (Switchgear)	34BDB01GS0	34UJK18026	M	M	RT	ES		SI	S	1E	EMC	Y (5)	Y (6)
34BDC 6.9 kV Bus (Switchgear)	34BDC01GS0	34UJK18026	M	M	RT	ES		SI	S	1E	EMC	Y (5)	Y (6)
34BDD 6.9 kV Bus (Switchgear)	34BDD01GS0	34UQB02001	M	M				SI	S	1E	EMC	Y (5)	Y (6)
34BMB 480 V Bus (Load Center)	34BMB01GS0	34UJK18026	M	M	RT	ES		SI	S	1E	EMC	Y (5)	Y (6)

Table 3.11-1—List of Environmentally Qualified Electrical/I&C Equipment (Sheet 87 of 130)

Name Tag (Equipment Description)	Tag Number	Local Area KKS ID (Room Location)	EQ Environment (Note 1)	Radiation Environment Zone (Note 2)	EQ Designated Function (Note 3)	Safety Class (Note 4)	EQ Program Designation (Note 5)
34BMC 480 V Bus (Load Center)	34BMC01GS0	34UJK18026	M	M	RT ES SI	S 1E EMC	Y (5) Y (6)
34BMD 480 V Bus (Load Center)	34BMD01GS0	34UQB02001	M	M	SI	S 1E EMC	Y (5) Y (6)
34BMT01 6.9 kV to 480 V Bus (XFMR)	34BMT01GT0	34UJK18026	M	M	SI	S 1E EMC	Y (5) Y (6)
34BMT02 6.9 kV to 480 V Bus (XFMR)	34BMT02GT0	34UJK18026	M	M	RT ES SI	S 1E EMC	Y (5) Y (6)
34BMT03 6.9 kV to 480 V Bus (XFMR)	34BMT03GT0	34UJK18026	M	M	RT ES SI	S 1E EMC	Y (5) Y (6)
34BMT04 6.9 kV to 480 V Bus (XFMR)	34BMT04GT0	34UQB02001	M	M	SI	S 1E EMC	Y (5) Y (6)
34BNA01 480 V Bus (MCC)	34BNA01GW0	34UBP05003	M	M	SI	S 1E EMC	Y (5) Y (6)
34BNB01 480 V Bus (MCC)	34BNB01GW0	34UJK18026	M	M	ES SI	S 1E EMC	Y (5) Y (6)
34BNB02 480 V Bus (MCC)	34BNB02GW0	34UJK18026	M	M	ES SI	S 1E EMC	Y (5) Y (6)
34BNB03 480 V Bus (MCC)	34BNB03GW0	34UJK18026	M	M	ES SI	S 1E EMC	Y (5) Y (6)
34BNC01 480 V Bus (MCC)	34BNC01GW0	34UJK18026	M	M	SI	S 1E EMC	Y (5) Y (6)
34BND01 480 V Bus (MCC)	34BND01GW0	34UQB02001	M	M	SI	S 1E EMC	Y (5) Y (6)
34BNT01 480V to 480 V (Reg. XFMR)	34BNT01GT0	34UJK18026	M	M	RT ES SI	S 1E EMC	Y (5) Y (6)
Non-Class 1E Uninterruptible Power Supply (NUPS)							
As a result of the EQ program screening, no components in this system were identifed for EQ.							
Lighting & Small Power System (LGT)							
As a result of the EQ program screening, no components in this system were identifed for EQ.							
Normal Power Supply (NPSS)							
31BDE01 13.8 kV Bus (Switchgear)	31BDE01GS0	31UJK18027	M	M	RT ES SI	S 1E EMC	Y (5) Y (6)
32BDE01 13.8 kV Bus (Switchgear)	32BDE01GS0	32UJK18020	M	M	RT ES SI	S 1E EMC	Y (5) Y (6)
33BDE01 13.8 kV Bus (Switchgear)	33BDE01GS0	33UJK18020	M	M	RT ES SI	S 1E EMC	Y (5) Y (6)
34BDE01 13.8 kV Bus (Switchgear)	34BDE01GS0	34UJK18027	M	M	RT ES SI	S 1E EMC	Y (5) Y (6)
12-Hour Uninterruptible Power Supply (12UPS)							
As a result of the EQ program screening, no components in this system were identifed for EQ.							
INSTRUMENTATION AND CONTROL SYSTEMS							
Protection System (PS)							
PS Division 1 Cabinets	30CLE	31UJK18025	M	M	RT ES PAM SI	S 1E EMC	Y (5) Y (6)
PS Division 2 Cabinets	30CLF	32UJK18004	M	M	RT ES PAM SI	S 1E EMC	Y (5) Y (6)
PS Division 3 Cabinets	30CLG	33UJK18004	M	M	RT ES PAM SI	S 1E EMC	Y (5) Y (6)
PS Division 4 Cabinets	30CLH	34UJK18025	M	M	RT ES PAM SI	S 1E EMC	Y (5) Y (6)

Table 3.11-1—List of Environmentally Qualified Electrical/I&C Equipment (Sheet 88 of 130)

Name Tag (Equipment Description)	Tag Number	Local Area KKS ID (Room Location)	EQ Environment (Note 1)	Radiation Environment Zone (Note 2)	EQ Designated Function (Note 3)	Safety Class (Note 4)	EQ Program Designation (Note 5)
Safety Automation System (SAS)							
SAS Cabinets Division 1	30DRA1	31UJK18025	M	M	ES PAM SI	S 1E EMC	Y (5) Y (6)
SAS Cabinets Division 2	30DRA2	32UJK18004	M	M	ES PAM SI	S 1E EMC	Y (5) Y (6)
SAS Cabinets Division 3	30DRA3	33UJK18004	M	M	ES PAM SI	S 1E EMC	Y (5) Y (6)
SAS Cabinets Division 4	30DRA4	34UJK18025	M	M	ES PAM SI	S 1E EMC	Y (5) Y (6)
Priority & Actuator Control System (PACS)							
PACS Division 1 Cabinets	30CLE6	31UJK18025	M	M	ES PAM SI	S 1E EMC	Y (5) Y (6)
PACS Division 2 Cabinets	30CLF6	32UJK18004	M	M	ES PAM SI	S 1E EMC	Y (5) Y (6)
PACS Division 3 Cabinets	30CLG6	33UJK18004	M	M	ES PAM SI	S 1E EMC	Y (5) Y (6)
PACS Division 4 Cabinets	30CLH6	34UJK18025	M	M	ES PAM SI	S 1E EMC	Y (5) Y (6)
Safety Information & Control System (SICS)							
SICS Cabinets Division 1	30CWY1	31UJK18025	M	M	ES PAM SI	S 1E EMC	Y (5) Y (6)
SICS Cabinets Division 2	30CWY2	32UJK18004	M	M	ES PAM SI	S 1E EMC	Y (5) Y (6)
SICS Cabinets Division 3	30CWY3	33UJK18004	M	M	ES PAM SI	S 1E EMC	Y (5) Y (6)
SICS Cabinets Division 4	30CWY4	34UJK18025	M	M	ES PAM SI	S 1E EMC	Y (5) Y (6)
SICS Cabinets MCR	N/A	32UJK26030	M	M	ES PAM SI	S 1E EMC	Y (5) Y (6)
SICS Cabinets RSS	N/A	33UJK22030	M	M	ES PAM SI	S 1E EMC	Y (5) Y (6)
SICS QDS Units MCR	N/A	32UJK26030	M	M	ES PAM SI	S 1E EMC	Y (5) Y (6)
SICS QDS Units RSS	N/A	33UJK22030	M	M	ES PAM SI	S 1E EMC	Y (5) Y (6)
Reactor Trip Button Division 1	30JRE00CH100	32UJK26030	M	M	RT SI	S 1E EMC	Y (5) Y (6)
Reactor Trip Button Division 2	30JRF00CH100	32UJK26030	M	M	RT SI	S 1E EMC	Y (5) Y (6)
Reactor Trip Button Division 3	30JRG00CH100	32UJK26030	M	M	RT SI	S 1E EMC	Y (5) Y (6)
Reactor Trip Button Division 4	30JRH00CH100	32UJK26030	M	M	RT SI	S 1E EMC	Y (5) Y (6)
Incore Instrumentation System (ICIS)							
SPND Conditioning Cabinet (Div 1)	30CLE12GH001	31UJK18025	M	M	RT SI	S 1E EMC	Y (5) Y (6)
SPND Conditioning Cabinet (Div 1)	30CLE15GH	31UJK18025	M	M	RT SI	S 1E EMC	Y (5) Y (6)
SPND Conditioning Cabinet (Div 2)	30CLF12GH002	32UJK18004	M	M	RT SI	S 1E EMC	Y (5) Y (6)
SPND Conditioning Cabinet (Div 2)	30CLF15GH	32UJK18004	M	M	RT SI	S 1E EMC	Y (5) Y (6)
SPND Conditioning Cabinet (Div 3)	30CLG12GH003	33UJK18004	M	M	RT SI	S 1E EMC	Y (5) Y (6)
SPND Conditioning Cabinet (Div 3)	30CLG15GH	33UJK18004	M	M	RT SI	S 1E EMC	Y (5) Y (6)
SPND Conditioning Cabinet (Div 4)	30CLH12GH004	34UJK18025	M	M	RT SI	S 1E EMC	Y (5) Y (6)

Table 3.11-1—List of Environmentally Qualified Electrical/I&C Equipment (Sheet 89 of 130)

Name Tag (Equipment Description)	Tag Number	Local Area KKS ID (Room Location)	EQ Environment (Note 1)	Radiation Environment Zone (Note 2)	EQ Designated Function (Note 3)	Safety Class (Note 4)	EQ Program Designation (Note 5)
SPND Conditioning Cabinet (Div 4)	30CLH15GH	34UJK18025	M	M	RT SI	S 1E EMC	Y (5) Y (6)
AMS Computer Cabinet	30CNC01GH004	32UJK26002	M	M	SI	S 1E EMC	Y (5) Y (6)
AMS Control Cabinet	30CNN01GH001	30UJA23042	H	H	SI	S 1E EMC	Y (1) Y (5)
AMS Load Cabinet	30CNN02GH002	30UJA23042	H	H	SI	S 1E EMC	Y (1) Y (5)
AMS Instrumentation Cabinet	30CNN03GH003	30UJA23041	H	H	SI	S 1E EMC	Y (1) Y (5)
Coordinate in Core: P16	30JKQ11BZ501	30UJA11001	H	H	SI	S 1E EMC	Y (1) Y (5)
Coordinate in Core: T7	30JKQ12BZ502	30UJA11001	H	H	SI	S 1E EMC	Y (1) Y (5)
Coordinate in Core: S4	30JKQ13BZ503	30UJA11001	H	H	SI	S 1E EMC	Y (1) Y (5)
Coordinate in Core: D2	30JKQ14BZ501	30UJA11001	H	H	SI	S 1E EMC	Y (1) Y (5)
Coordinate in Core: A11	30JKQ15BZ502	30UJA11001	H	H	SI	S 1E EMC	Y (1) Y (5)
Coordinate in Core: B14	30JKQ16BZ503	30UJA11001	H	H	SI	S 1E EMC	Y (1) Y (5)
Coordinate in Core: P2	30JKQ21BZ504	30UJA11001	H	H	SI	S 1E EMC	Y (1) Y (5)
Coordinate in Core: D16	30JKQ22BZ504	30UJA11001	H	H	SI	S 1E EMC	Y (1) Y (5)
Coordinate in Core: L1	30JKQ31BZ505	30UJA11001	H	H	SI	S 1E EMC	Y (1) Y (5)
Coordinate in Core: G17	30JKQ32BZ505	30UJA11001	H	H	SI	S 1E EMC	Y (1) Y (5)
Coordinate in Core: T11	30JKQ41BZ506	30UJA11001	H	H	SI	S 1E EMC	Y (1) Y (5)
Coordinate in Core: A7	30JKQ42BZ506	30UJA11001	H	H	SI	S 1E EMC	Y (1) Y (5)
Position L17 (Dome Middle)	30JKS10CT091	30UJA15001	H	H	SII	NS-AQ EMC	Y (1) Y (5)
Position L17 (Dome Bottom)	30JKS10CT092	30UJA15001	H	H	SII	NS-AQ EMC	Y (1) Y (5)
Core Outlet Thermocouple	30JKS11CT821	30UJA11001	H	H	PAM SI	S 1E EMC	Y (1) Y (5)
Core Outlet Thermocouple	30JKS11CT822	30UJA11001	H	H	PAM SI	S 1E EMC	Y (1) Y (5)
Core Outlet Thermocouple	30JKS11CT823	30UJA11001	H	H	PAM SI	S 1E EMC	Y (1) Y (5)
Self-Powered Neutron Detector	30JKS11CX821	30UJA11001	H	H	RT SI	S 1E EMC	Y (1) Y (5)
Self-Powered Neutron Detector	30JKS11CX822	30UJA11001	H	H	RT SI	S 1E EMC	Y (1) Y (5)
Self-Powered Neutron Detector	30JKS11CX823	30UJA11001	H	H	RT SI	S 1E EMC	Y (1) Y (5)
Self-Powered Neutron Detector	30JKS11CX824	30UJA11001	H	H	RT SI	S 1E EMC	Y (1) Y (5)
Self-Powered Neutron Detector	30JKS11CX825	30UJA11001	H	H	RT SI	S 1E EMC	Y (1) Y (5)
Self-Powered Neutron Detector	30JKS11CX826	30UJA11001	H	H	RT SI	S 1E EMC	Y (1) Y (5)
Core Outlet Thermocouple	30JKS12CT841	30UJA11001	H	H	PAM SI	S 1E EMC	Y (1) Y (5)
Core Outlet Thermocouple	30JKS12CT842	30UJA11001	H	H	PAM SI	S 1E EMC	Y (1) Y (5)
Core Outlet Thermocouple	30JKS12CT843	30UJA11001	H	H	PAM SI	S 1E EMC	Y (1) Y (5)
Self-Powered Neutron Detector	30JKS12CX841	30UJA11001	H	H	RT SI	S 1E EMC	Y (1) Y (5)
Self-Powered Neutron Detector	30JKS12CX842	30UJA11001	H	H	RT SI	S 1E EMC	Y (1) Y (5)

Table 3.11-1—List of Environmentally Qualified Electrical/I&C Equipment (Sheet 90 of 130)

Name Tag (Equipment Description)	Tag Number	Local Area KKS ID (Room Location)	EQ Environment (Note 1)	Radiation Environment Zone (Note 2)	EQ Designated Function (Note 3)	Safety Class (Note 4)	EQ Program Designation (Note 5)
Self-Powered Neutron Detector	30JKS12CX843	30UJA11001	H	H	RT SI	S 1E EMC	Y (1) Y (5)
Self-Powered Neutron Detector	30JKS12CX844	30UJA11001	H	H	RT SI	S 1E EMC	Y (1) Y (5)
Self-Powered Neutron Detector	30JKS12CX845	30UJA11001	H	H	RT SI	S 1E EMC	Y (1) Y (5)
Self-Powered Neutron Detector	30JKS12CX846	30UJA11001	H	H	RT SI	S 1E EMC	Y (1) Y (5)
Core Outlet Thermocouple	30JKS13CT821	30UJA11001	H	H	PAM SI	S 1E EMC	Y (1) Y (5)
Core Outlet Thermocouple	30JKS13CT822	30UJA11001	H	H	PAM SI	S 1E EMC	Y (1) Y (5)
Core Outlet Thermocouple	30JKS13CT823	30UJA11001	H	H	PAM SI	S 1E EMC	Y (1) Y (5)
Self-Powered Neutron Detector	30JKS13CX821	30UJA11001	H	H	RT SI	S 1E EMC	Y (1) Y (5)
Self-Powered Neutron Detector	30JKS13CX822	30UJA11001	H	H	RT SI	S 1E EMC	Y (1) Y (5)
Self-Powered Neutron Detector	30JKS13CX823	30UJA11001	H	H	RT SI	S 1E EMC	Y (1) Y (5)
Self-Powered Neutron Detector	30JKS13CX824	30UJA11001	H	H	RT SI	S 1E EMC	Y (1) Y (5)
Self-Powered Neutron Detector	30JKS13CX825	30UJA11001	H	H	RT SI	S 1E EMC	Y (1) Y (5)
Self-Powered Neutron Detector	30JKS13CX826	30UJA11001	H	H	RT SI	S 1E EMC	Y (1) Y (5)
Core Outlet Thermocouple	30JKS14CT841	30UJA11001	H	H	PAM SI	S 1E EMC	Y (1) Y (5)
Core Outlet Thermocouple	30JKS14CT842	30UJA11001	H	H	PAM SI	S 1E EMC	Y (1) Y (5)
Core Outlet Thermocouple	30JKS14CT843	30UJA11001	H	H	PAM SI	S 1E EMC	Y (1) Y (5)
Self-Powered Neutron Detector	30JKS14CX841	30UJA11001	H	H	RT SI	S 1E EMC	Y (1) Y (5)
Self-Powered Neutron Detector	30JKS14CX842	30UJA11001	H	H	RT SI	S 1E EMC	Y (1) Y (5)
Self-Powered Neutron Detector	30JKS14CX843	30UJA11001	H	H	RT SI	S 1E EMC	Y (1) Y (5)
Self-Powered Neutron Detector	30JKS14CX844	30UJA11001	H	H	RT SI	S 1E EMC	Y (1) Y (5)
Self-Powered Neutron Detector	30JKS14CX845	30UJA11001	H	H	RT SI	S 1E EMC	Y (1) Y (5)
Self-Powered Neutron Detector	30JKS14CX846	30UJA11001	H	H	RT SI	S 1E EMC	Y (1) Y (5)
Core Outlet Thermocouple	30JKS15CT821	30UJA11001	H	H	PAM SI	S 1E EMC	Y (1) Y (5)
Core Outlet Thermocouple	30JKS15CT822	30UJA11001	H	H	PAM SI	S 1E EMC	Y (1) Y (5)
Core Outlet Thermocouple	30JKS15CT823	30UJA11001	H	H	PAM SI	S 1E EMC	Y (1) Y (5)
Self-Powered Neutron Detector	30JKS15CX821	30UJA11001	H	H	RT SI	S 1E EMC	Y (1) Y (5)
Self-Powered Neutron Detector	30JKS15CX822	30UJA11001	H	H	RT SI	S 1E EMC	Y (1) Y (5)
Self-Powered Neutron Detector	30JKS15CX823	30UJA11001	H	H	RT SI	S 1E EMC	Y (1) Y (5)
Self-Powered Neutron Detector	30JKS15CX824	30UJA11001	H	H	RT SI	S 1E EMC	Y (1) Y (5)
Self-Powered Neutron Detector	30JKS15CX825	30UJA11001	H	H	RT SI	S 1E EMC	Y (1) Y (5)
Self-Powered Neutron Detector	30JKS15CX826	30UJA11001	H	H	RT SI	S 1E EMC	Y (1) Y (5)
Core Outlet Thermocouple	30JKS16CT811	30UJA11001	H	H	PAM SI	S 1E EMC	Y (1) Y (5)
Core Outlet Thermocouple	30JKS16CT812	30UJA11001	H	H	PAM SI	S 1E EMC	Y (1) Y (5)

Table 3.11-1—List of Environmentally Qualified Electrical/I&C Equipment (Sheet 91 of 130)

Name Tag (Equipment Description)	Tag Number	Local Area KKS ID (Room Location)	EQ Environment (Note 1)	Radiation Environment Zone (Note 2)	EQ Designated Function (Note 3)			Safety Class (Note 4)			EQ Program Designation (Note 5)	
Core Outlet Thermocouple	30JKS16CT813	30UJA11001	H	H		PAM	SI	S	1E	EMC	Y (1)	Y (5)
Self-Powered Neutron Detector	30JKS16CX811	30UJA11001	H	H	RT		SI	S	1E	EMC	Y (1)	Y (5)
Self-Powered Neutron Detector	30JKS16CX812	30UJA11001	H	H	RT		SI	S	1E	EMC	Y (1)	Y (5)
Self-Powered Neutron Detector	30JKS16CX813	30UJA11001	H	H	RT		SI	S	1E	EMC	Y (1)	Y (5)
Self-Powered Neutron Detector	30JKS16CX814	30UJA11001	H	H	RT		SI	S	1E	EMC	Y (1)	Y (5)
Self-Powered Neutron Detector	30JKS16CX815	30UJA11001	H	H	RT		SI	S	1E	EMC	Y (1)	Y (5)
Self-Powered Neutron Detector	30JKS16CX816	30UJA11001	H	H	RT		SI	S	1E	EMC	Y (1)	Y (5)
Core Outlet Thermocouple	30JKS21CT811	30UJA11001	H	H		PAM	SI	S	1E	EMC	Y (1)	Y (5)
Core Outlet Thermocouple	30JKS21CT812	30UJA11001	H	H		PAM	SI	S	1E	EMC	Y (1)	Y (5)
Core Outlet Thermocouple	30JKS21CT813	30UJA11001	H	H		PAM	SI	S	1E	EMC	Y (1)	Y (5)
Self-Powered Neutron Detector	30JKS21CX811	30UJA11001	H	H	RT		SI	S	1E	EMC	Y (1)	Y (5)
Self-Powered Neutron Detector	30JKS21CX812	30UJA11001	H	H	RT		SI	S	1E	EMC	Y (1)	Y (5)
Self-Powered Neutron Detector	30JKS21CX813	30UJA11001	H	H	RT		SI	S	1E	EMC	Y (1)	Y (5)
Self-Powered Neutron Detector	30JKS21CX814	30UJA11001	H	H	RT		SI	S	1E	EMC	Y (1)	Y (5)
Self-Powered Neutron Detector	30JKS21CX815	30UJA11001	H	H	RT		SI	S	1E	EMC	Y (1)	Y (5)
Self-Powered Neutron Detector	30JKS21CX816	30UJA11001	H	H	RT		SI	S	1E	EMC	Y (1)	Y (5)
Core Outlet Thermocouple	30JKS22CT831	30UJA11001	H	H		PAM	SI	S	1E	EMC	Y (1)	Y (5)
Core Outlet Thermocouple	30JKS22CT832	30UJA11001	H	H		PAM	SI	S	1E	EMC	Y (1)	Y (5)
Core Outlet Thermocouple	30JKS22CT833	30UJA11001	H	H		PAM	SI	S	1E	EMC	Y (1)	Y (5)
Self-Powered Neutron Detector	30JKS22CX831	30UJA11001	H	H	RT		SI	S	1E	EMC	Y (1)	Y (5)
Self-Powered Neutron Detector	30JKS22CX832	30UJA11001	H	H	RT		SI	S	1E	EMC	Y (1)	Y (5)
Self-Powered Neutron Detector	30JKS22CX833	30UJA11001	H	H	RT		SI	S	1E	EMC	Y (1)	Y (5)
Self-Powered Neutron Detector	30JKS22CX834	30UJA11001	H	H	RT		SI	S	1E	EMC	Y (1)	Y (5)
Self-Powered Neutron Detector	30JKS22CX835	30UJA11001	H	H	RT		SI	S	1E	EMC	Y (1)	Y (5)
Self-Powered Neutron Detector	30JKS22CX836	30UJA11001	H	H	RT		SI	S	1E	EMC	Y (1)	Y (5)
Position G1 (Dome Middle)	30JKS30CT091	30UJA15001	H	H			SII	NS-AQ		EMC	Y (1)	Y (5)
Position G1 (Dome Bottom)	30JKS30CT092	30UJA15001	H	H			SII	NS-AQ		EMC	Y (1)	Y (5)
Core Outlet Thermocouple	30JKS31CT831	30UJA11001	H	H		PAM	SI	S	1E	EMC	Y (1)	Y (5)
Core Outlet Thermocouple	30JKS31CT832	30UJA11001	H	H		PAM	SI	S	1E	EMC	Y (1)	Y (5)
Core Outlet Thermocouple	30JKS31CT833	30UJA11001	H	H		PAM	SI	S	1E	EMC	Y (1)	Y (5)
Self-Powered Neutron Detector	30JKS31CX831	30UJA11001	H	H	RT		SI	S	1E	EMC	Y (1)	Y (5)
Self-Powered Neutron Detector	30JKS31CX832	30UJA11001	H	H	RT		SI	S	1E	EMC	Y (1)	Y (5)
Self-Powered Neutron Detector	30JKS31CX833	30UJA11001	H	H	RT		SI	S	1E	EMC	Y (1)	Y (5)

Table 3.11-1—List of Environmentally Qualified Electrical/I&C Equipment (Sheet 92 of 130)

Name Tag (Equipment Description)	Tag Number	Local Area KKS ID (Room Location)	EQ Environment (Note 1)	Radiation Environment Zone (Note 2)	EQ Designated Function (Note 3)	Safety Class (Note 4)	EQ Program Designation (Note 5)
Self-Powered Neutron Detector	30JKS31CX834	30UJA11001	H	H	RT SI	S 1E EMC	Y (1) Y (5)
Self-Powered Neutron Detector	30JKS31CX835	30UJA11001	H	H	RT SI	S 1E EMC	Y (1) Y (5)
Self-Powered Neutron Detector	30JKS31CX836	30UJA11001	H	H	RT SI	S 1E EMC	Y (1) Y (5)
Core Outlet Thermocouple	30JKS32CT841	30UJA11001	H	H	PAM SI	S 1E EMC	Y (1) Y (5)
Core Outlet Thermocouple	30JKS32CT842	30UJA11001	H	H	PAM SI	S 1E EMC	Y (1) Y (5)
Core Outlet Thermocouple	30JKS32CT843	30UJA11001	H	H	PAM SI	S 1E EMC	Y (1) Y (5)
Self-Powered Neutron Detector	30JKS32CX841	30UJA11001	H	H	RT SI	S 1E EMC	Y (1) Y (5)
Self-Powered Neutron Detector	30JKS32CX842	30UJA11001	H	H	RT SI	S 1E EMC	Y (1) Y (5)
Self-Powered Neutron Detector	30JKS32CX843	30UJA11001	H	H	RT SI	S 1E EMC	Y (1) Y (5)
Self-Powered Neutron Detector	30JKS32CX844	30UJA11001	H	H	RT SI	S 1E EMC	Y (1) Y (5)
Self-Powered Neutron Detector	30JKS32CX845	30UJA11001	H	H	RT SI	S 1E EMC	Y (1) Y (5)
Self-Powered Neutron Detector	30JKS32CX846	30UJA11001	H	H	RT SI	S 1E EMC	Y (1) Y (5)
Core Outlet Thermocouple	30JKS41CT811	30UJA11001	H	H	PAM SI	S 1E EMC	Y (1) Y (5)
Core Outlet Thermocouple	30JKS41CT812	30UJA11001	H	H	PAM SI	S 1E EMC	Y (1) Y (5)
Core Outlet Thermocouple	30JKS41CT813	30UJA11001	H	H	PAM SI	S 1E EMC	Y (1) Y (5)
Self-Powered Neutron Detector	30JKS41CX811	30UJA11001	H	H	RT SI	S 1E EMC	Y (1) Y (5)
Self-Powered Neutron Detector	30JKS41CX812	30UJA11001	H	H	RT SI	S 1E EMC	Y (1) Y (5)
Self-Powered Neutron Detector	30JKS41CX813	30UJA11001	H	H	RT SI	S 1E EMC	Y (1) Y (5)
Self-Powered Neutron Detector	30JKS41CX814	30UJA11001	H	H	RT SI	S 1E EMC	Y (1) Y (5)
Self-Powered Neutron Detector	30JKS41CX815	30UJA11001	H	H	RT SI	S 1E EMC	Y (1) Y (5)
Self-Powered Neutron Detector	30JKS41CX816	30UJA11001	H	H	RT SI	S 1E EMC	Y (1) Y (5)
Core Outlet Thermocouple	30JKS42CT831	30UJA11001	H	H	PAM SI	S 1E EMC	Y (1) Y (5)
Core Outlet Thermocouple	30JKS42CT832	30UJA11001	H	H	PAM SI	S 1E EMC	Y (1) Y (5)
Core Outlet Thermocouple	30JKS42CT833	30UJA11001	H	H	PAM SI	S 1E EMC	Y (1) Y (5)
Self-Powered Neutron Detector	30JKS42CX831	30UJA11001	H	H	RT SI	S 1E EMC	Y (1) Y (5)
Self-Powered Neutron Detector	30JKS42CX832	30UJA11001	H	H	RT SI	S 1E EMC	Y (1) Y (5)
Self-Powered Neutron Detector	30JKS42CX833	30UJA11001	H	H	RT SI	S 1E EMC	Y (1) Y (5)
Self-Powered Neutron Detector	30JKS42CX834	30UJA11001	H	H	RT SI	S 1E EMC	Y (1) Y (5)
Self-Powered Neutron Detector	30JKS42CX835	30UJA11001	H	H	RT SI	S 1E EMC	Y (1) Y (5)
Self-Powered Neutron Detector	30JKS42CX836	30UJA11001	H	H	RT SI	S 1E EMC	Y (1) Y (5)
Position J7 (Dome Top)	30JKS50CT091	30UJA15001	H	H	SII	NS-AQ EMC	Y (1) Y (5)
Excore Instrumentation System (EIS)							
Source Range Detector	30JKT01CX851	30UJA11001	H	H	PAM SI	S 1E EMC	Y (1) Y (5)

Table 3.11-1—List of Environmentally Qualified Electrical/I&C Equipment (Sheet 93 of 130)

Name Tag (Equipment Description)	Tag Number	Local Area KKS ID (Room Location)	EQ Environment (Note 1)	Radiation Environment Zone (Note 2)	EQ Designated Function (Note 3)				Safety Class (Note 4)			EQ Program Designation (Note 5)		
Source Range Detector	30JKT01CX852	30UJA11001	H	H			PAM	SI	S	1E	EMC	Y (1)	Y (5)	
Source Range Detector	30JKT01CX853	30UJA11001	H	H			PAM	SI	S	1E	EMC	Y (1)	Y (5)	
Intermediate Range Detector	30JKT02CX851	30UJA11001	H	H	RT	ES	PAM	SI	S	1E	EMC	Y (1)	Y (5)	
Intermediate Range Detector	30JKT02CX852	30UJA11001	H	H	RT	ES	PAM	SI	S	1E	EMC	Y (1)	Y (5)	
Intermediate Range Detector	30JKT02CX853	30UJA11001	H	H	RT	ES	PAM	SI	S	1E	EMC	Y (1)	Y (5)	
Intermediate Range Detector	30JKT02CX854	30UJA11001	H	H	RT	ES	PAM	SI	S	1E	EMC	Y (1)	Y (5)	
Top Power Range Detector	30JKT03CX851	30UJA11001	H	H	RT	ES		SI	S	1E	EMC	Y (1)	Y (5)	
Top Power Range Detector	30JKT03CX852	30UJA11001	H	H	RT	ES		SI	S	1E	EMC	Y (1)	Y (5)	
Top Power Range Detector	30JKT03CX853	30UJA11001	H	H	RT	ES		SI	S	1E	EMC	Y (1)	Y (5)	
Top Power Range Detector	30JKT03CX854	30UJA11001	H	H	RT	ES		SI	S	1E	EMC	Y (1)	Y (5)	
Bottom Power Range Detector	30JKT03CX855	30UJA11001	H	H	RT	ES		SI	S	1E	EMC	Y (1)	Y (5)	
Bottom Power Range Detector	30JKT03CX856	30UJA11001	H	H	RT	ES		SI	S	1E	EMC	Y (1)	Y (5)	
Bottom Power Range Detector	30JKT03CX857	30UJA11001	H	H	RT	ES		SI	S	1E	EMC	Y (1)	Y (5)	
Bottom Power Range Detector	30JKT03CX858	30UJA11001	H	H	RT	ES		SI	S	1E	EMC	Y (1)	Y (5)	
Reactor Pressure Vessel Level Measurement System (RPVL)														
RPVL Conditioning Cabinet (Div 1)	30CLE14GH001	31UJK18025	M	M				SII	NS-AQ		EMC		Y (5)	Y (6)
RPVL Conditioning Cabinet (Div 2)	30CLF14GH002	32UJK18004	M	M				SII	NS-AQ		EMC		Y (5)	Y (6)
RPVL Conditioning Cabinet (Div 3)	30CLG14GH003	33UJK18004	M	M				SII	NS-AQ		EMC		Y (5)	Y (6)
RPVL Conditioning Cabinet (Div 4)	30CLH14GH004	34UJK18025	M	M				SII	NS-AQ		EMC		Y (5)	Y (6)
Position L17 (Top Sensor)	30JKS10CL001	30UJA11001	H	H				SII	NS-AQ		EMC	Y (1)	Y (5)	
Position L17 (Middle Sensor)	30JKS10CL002	30UJA11001	H	H				SII	NS-AQ		EMC	Y (1)	Y (5)	
Position L17 (Bottom Sensor)	30JKS10CL003	30UJA11001	H	H				SII	NS-AQ		EMC	Y (1)	Y (5)	
Position S14 (Top Sensor)	30JKS20CL001	30UJA11001	H	H				SII	NS-AQ		EMC	Y (1)	Y (5)	
Position S14 (Middle Sensor)	30JKS20CL002	30UJA11001	H	H				SII	NS-AQ		EMC	Y (1)	Y (5)	
Position S14 (Bottom Sensor)	30JKS20CL003	30UJA11001	H	H				SII	NS-AQ		EMC	Y (1)	Y (5)	
Position G1 (Top Sensor)	30JKS30CL001	30UJA11001	H	H				SII	NS-AQ		EMC	Y (1)	Y (5)	
Position G1 (Middle Sensor)	30JKS30CL002	30UJA11001	H	H				SII	NS-AQ		EMC	Y (1)	Y (5)	
Position G1 (Bottom Sensor)	30JKS30CL003	30UJA11001	H	H				SII	NS-AQ		EMC	Y (1)	Y (5)	
Position B4 (Top Sensor)	30JKS40CL001	30UJA11001	H	H				SII	NS-AQ		EMC	Y (1)	Y (5)	
Position B4 (Middle Sensor)	30JKS40CL002	30UJA11001	H	H				SII	NS-AQ		EMC	Y (1)	Y (5)	
Position B4 (Bottom Sensor)	30JKS40CL003	30UJA11001	H	H				SII	NS-AQ		EMC	Y (1)	Y (5)	

Table 3.11-1—List of Environmentally Qualified Electrical/I&C Equipment (Sheet 94 of 130)

Name Tag (Equipment Description)	Tag Number	Local Area KKS ID (Room Location)	EQ Environment (Note 1)	Radiation Environment Zone (Note 2)	EQ Designated Function (Note 3)	Safety Class (Note 4)	EQ Program Designation (Note 5)
Control Rod Drive Control System (CRDCS)							
Contactor Module	31BUA10BZ001	31UJK18027	M	M	RT ES SI	S 1E EMC	Y (5) Y (6)
Contactor Module	31BUA11BZ001	31UJK18027	M	M	RT ES SI	S 1E EMC	Y (5) Y (6)
Contactor Module	31BUA1BZ001	31UJK18027	M	M	RT ES SI	S 1E EMC	Y (5) Y (6)
Contactor Module	31BUA2BZ001	31UJK18027	M	M	RT ES SI	S 1E EMC	Y (5) Y (6)
Contactor Module	31BUA3BZ001	31UJK18027	M	M	RT ES SI	S 1E EMC	Y (5) Y (6)
Contactor Module	31BUA4BZ001	31UJK18027	M	M	RT ES SI	S 1E EMC	Y (5) Y (6)
Contactor Module	31BUA5BZ001	31UJK18027	M	M	RT ES SI	S 1E EMC	Y (5) Y (6)
Contactor Module	31BUA6BZ001	31UJK18027	M	M	RT ES SI	S 1E EMC	Y (5) Y (6)
Contactor Module	31BUA7BZ001	31UJK18027	M	M	RT ES SI	S 1E EMC	Y (5) Y (6)
Contactor Module	31BUA8BZ001	31UJK18027	M	M	RT ES SI	S 1E EMC	Y (5) Y (6)
Contactor Module	31BUA9BZ001	31UJK18027	M	M	RT ES SI	S 1E EMC	Y (5) Y (6)
Contactor Module	34BUA10BZ001	34UJK18027	M	M	RT ES SI	S 1E EMC	Y (5) Y (6)
Contactor Module	34BUA11BZ001	34UJK18027	M	M	RT ES SI	S 1E EMC	Y (5) Y (6)
Contactor Module	34BUA12BZ001	34UJK18027	M	M	RT ES SI	S 1E EMC	Y (5) Y (6)
Contactor Module	34BUA1BZ001	34UJK18027	M	M	RT ES SI	S 1E EMC	Y (5) Y (6)
Contactor Module	34BUA2BZ001	34UJK18027	M	M	RT ES SI	S 1E EMC	Y (5) Y (6)
Contactor Module	34BUA3BZ001	34UJK18027	M	M	RT ES SI	S 1E EMC	Y (5) Y (6)
Contactor Module	34BUA4BZ001	34UJK18027	M	M	RT ES SI	S 1E EMC	Y (5) Y (6)
Contactor Module	34BUA5BZ001	34UJK18027	M	M	RT ES SI	S 1E EMC	Y (5) Y (6)
Contactor Module	34BUA6BZ001	34UJK18027	M	M	RT ES SI	S 1E EMC	Y (5) Y (6)
Contactor Module	34BUA7BZ001	34UJK18027	M	M	RT ES SI	S 1E EMC	Y (5) Y (6)
Contactor Module	34BUA8BZ001	34UJK18027	M	M	RT ES SI	S 1E EMC	Y (5) Y (6)
Contactor Module	34BUA9BZ001	34UJK18027	M	M	RT ES SI	S 1E EMC	Y (5) Y (6)
Hydrogen Monitoring System (HCMS)							
H2 Sensor UJA	30JMU10CQ001	30UJA40001	H	H	SI	S 1E EMC	Y (1) Y(5)
H2 Sensor UJA	30JMU10CQ002	30UJA34019	H	H	SI	S 1E EMC	Y (1) Y(5)
H2 Sensor UJA	30JMU10CQ003	30UJA34003	H	H	SI	S 1E EMC	Y (1) Y(5)
H2 Sensor UJA	30JMU10CQ004	30UJA29014	H	H	SI	S 1E EMC	Y (1) Y(5)
H2 Sensor UJA	30JMU10CQ005	30UJA23008	H	H	SI	S 1E EMC	Y (1) Y(5)
H2 Sensor UJA	30JMU10CQ006	30UJA29013	H	H	SI	S 1E EMC	Y (1) Y(5)
H2 Sensor UJA	30JMU10CQ007	30UJA29014	H	H	SI	S 1E EMC	Y (1) Y(5)

Table 3.11-1—List of Environmentally Qualified Electrical/I&C Equipment (Sheet 95 of 130)

Name Tag (Equipment Description)	Tag Number	Local Area KKS ID (Room Location)	EQ Environment (Note 1)	Radiation Environment Zone (Note 2)	EQ Designated Function (Note 3)	Safety Class (Note 4)	EQ Program Designation (Note 5)
H2 Sensor UFA	30JMU20CQ001	30UFA10082	M	H	SII	NS-AQ EMC	Y(2) Y(5) Y(6)
H2 Sensor UFA	30JMU20CQ002	30UFA10082	M	H	SII	NS-AQ EMC	Y(2) Y(5) Y(6)
H2 Sensor UFA	30JMU20CQ003	30UFA10082	M	H	SII	NS-AQ EMC	Y(2) Y(5) Y(6)
H2 Sensor UFA	30JMU20CQ004	30UFA13085	M	H	SII	NS-AQ EMC	Y(2) Y(5) Y(6)
H2 Sensor UFA	30JMU20CQ005	30UFA13085	M	H	SII	NS-AQ EMC	Y(2) Y(5) Y(6)
H2 Isolation Valve UJA	30JMU50AA075	30UJA11016	H	H	PAM SI	S 1E EMC	Y(1) Y(5)
H2 Isolation Valve UJH	30JMU50AA076	34UJH10011	M	H	PAM SI	S 1E EMC	Y(2) Y(5) Y(6)
H2 Isolation Valve UJA	30JMU50AA077	30UJA11016	H	H	PAM SI	S 1E EMC	Y(1) Y(5)
H2 Isolation Valve UJH	30JMU50AA078	34UJH10011	M	H	PAM SI	S 1E EMC	Y(2) Y(5) Y(6)
H2 Isolation ValvE UJA	30JMU50AA079	30UJA11016	H	H	PAM SI	S 1E EMC	Y(1) Y(5)
H2 Isolation Valve UJH	30JMU50AA080	34UJH10011	M	H	PAM SI	S 1E EMC	Y(2) Y(5) Y(6)
H2 Isolation Valve UJA	30JMU50AA081	30UJA11016	H	H	PAM SI	S 1E EMC	Y(1) Y(5)
H2 Isolation Valve UJH	30JMU50AA082	34UJH10011	M	H	PAM SI	S 1E EMC	Y(2) Y(5) Y(6)
H2 Isolation Valve UJH	30JMU50AA083	34UJH10011	M	H	PAM SI	S 1E EMC	Y(2) Y(5) Y(6)
H2 Isolation Valve UJA	30JMU50AA084	30UJA11016	H	H	PAM SI	S 1E EMC	Y(1) Y(5)
Cabinet Heater	30JMU50AH010	34UJH10010	M	H	SII	NS-AQ	Y(2) Y(5)
P Dnstr Moist Senr	30JMU50CP001	31UJH10010	M	H	SII	NS-AQ	Y(2) Y(5)
P At Vacuum Tank	30JMU50CP002	34UJH10010	M	H	SII	NS-AQ	Y(2) Y(5)
N2 Sup Upstr P Redu	30JMU50CP501	34UJH10010	M	H	SII	NS-AQ	Y(2) Y(5)
N2 Sup Dnstr P Redu	30JMU50CP502	34UJH10010	M	H	SII	NS-AQ	Y(2) Y(5)
Locl P At Batt P Redu	30JMU50CP503	34UJH10011	M	H	SII	NS-AQ	Y(2) Y(5)
Locl P At Batt P Redu	30JMU50CP504	34UJH10011	M	H	SII	NS-AQ	Y(2) Y(5)
Locl P At Batt P Redu	30JMU50CP505	34UJH10011	M	H	SII	NS-AQ	Y(2) Y(5)
P At P Redu	30JMU50CP512	34UJH10010	M	H	SII	NS-AQ	Y(2) Y(5)
P Dnstr Sensors	30JMU50CP513	34UJH10010	M	H	SII	NS-AQ	Y(2) Y(5)
P At P Redu	30JMU50CP514	34UJH10010	M	H	SII	NS-AQ	Y(2) Y(5)
P At P Redu	30JMU50CP515	34UJH10010	M	H	SII	NS-AQ	Y(2) Y(5)
H2 CONC *UJA*	30JMU50CQ001	34UJH10011	M	H	SII	NS-AQ	Y(2) Y(5)
H2 Conc *UJA*	30JMU50CQ002	34UJH10011	M	H	SII	NS-AQ	Y(2) Y(5)
H2 Conc *UJA*	30JMU50CQ003	34UJH10011	M	H	SII	NS-AQ	Y(2) Y(5)
H2 Conc *UJA*	30JMU50CQ004	34UJH10011	M	H	SII	NS-AQ	Y(2) Y(5)
Moisture Sensor	30JMU50CQ010	34UJH10010	M	H	SII	NS-AQ	Y(2) Y(5)
Moist Conc *UJA*	30JMU50CQ011	34UJH10011	M	H	SII	NS-AQ	Y(2) Y(5)

Table 3.11-1—List of Environmentally Qualified Electrical/I&C Equipment (Sheet 96 of 130)

Name Tag (Equipment Description)	Tag Number	Local Area KKS ID (Room Location)	EQ Environment (Note 1)	Radiation Environment Zone (Note 2)	EQ Designated Function (Note 3)	Safety Class (Note 4)	EQ Program Designation (Note 5)
Moist Conc *UJA*	30JMU50CQ012	34UJH10011	M	H	SII	NS-AQ	Y(2) Y(5)
Moist Conc *UJA*	30JMU50CQ013	34UJH10011	M	H	SII	NS-AQ	Y(2) Y(5)
Moist Conc *UJA*	30JMU50CQ014	34UJH10011	M	H	SII	NS-AQ	Y(2) Y(5)
H2 Sensor	30JMU50CQ020	34UJH10010	M	H	SII	NS-AQ	Y(2) Y(5)
T Cabinet Heating	30JMU50CT010	34UJH10010	M	H	SII	NS-AQ	Y(2) Y(5)
T Cabinet Heating	30JMU50CT011	34UJH10010	M	H	SII	NS-AQ	Y(2) Y(5)
T At H2 Sensor	30JMU50CT012	34UJH10010	M	H	SII	NS-AQ	Y(2) Y(5)
T At Test Vessel	30JMU50CT013	34UJH10010	M	H	SII	NS-AQ	Y(2) Y(5)
H2 Isolation Valve UJA	30JMU51AA085	30UJA11013	H	H	PAM SI	S 1E EMC	Y(1) Y(5)
H2 Isolation Valve UJH	30JMU51AA086	31UJH10011	M	H	PAM SI	S 1E EMC	Y(2) Y(5) Y(6)
H2 Isolation Valve UJA	30JMU51AA087	30UJA11013	H	H	PAM SI	S 1E EMC	Y(1) Y(5)
H2 Isolation Valve UJH	30JMU51AA088	31UJH10011	M	H	PAM SI	S 1E EMC	Y(2) Y(5) Y(6)
H2 Isolation Valve UJA	30JMU51AA089	30UJA11013	H	H	PAM SI	S 1E EMC	Y(1) Y(5)
H2 Isolation Valve UJH	30JMU51AA090	31UJH10011	M	H	PAM SI	S 1E EMC	Y(2) Y(5) Y(6)
H2 Isolation Valve UJA	30JMU51AA091	30UJA11013	H	H	PAM SI	S 1E EMC	Y(1) Y(5)
H2 Isolation ValvE UJH	30JMU51AA092	31UJH10011	M	H	PAM SI	S 1E EMC	Y(2) Y(5) Y(6)
H2 Isolation Valve UJH	30JMU51AA093	31UJH10011	M	H	PAM SI	S 1E EMC	Y(2) Y(5) Y(6)
H2 Isolation Valve UJA	30JMU51AA094	30UJA11013	H	H	PAM SI	S 1E EMC	Y(1) Y(5)
Cabinet Heater	30JMU51AH010	31UJH10010	M	H	SII	NS-AQ	Y(2) Y(5)
P Dnstr Moist Senr	30JMU51CP001	31UJH10010	M	H	SII	NS-AQ	Y(2) Y(5)
P At Vacuum Tank	30JMU51CP002	31UJH10010	M	H	SII	NS-AQ	Y(2) Y(5)
N2 Sup Upstr P Redu	30JMU51CP501	31UJH10010	M	H	SII	NS-AQ	Y(2) Y(5)
N2 Sup Dnstr P Redu	30JMU51CP502	31UJH10010	M	H	SII	NS-AQ	Y(2) Y(5)
Locl P At Batt P Redu	30JMU51CP503	31UJH10011	M	H	SII	NS-AQ	Y(2) Y(5)
Locl P At Batt P Redu	30JMU51CP504	31UJH10011	M	H	SII	NS-AQ	Y(2) Y(5)
Locl P At Batt P Redu	30JMU51CP505	31UJH10011	M	H	SII	NS-AQ	Y(2) Y(5)
P At P Redu	30JMU51CP512	31UJH10010	M	H	SII	NS-AQ	Y(2) Y(5)
P Dnstr Sensors	30JMU51CP513	31UJH10010	M	H	SII	NS-AQ	Y(2) Y(5)
P At P Redu	30JMU51CP514	31UJH10010	M	H	SII	NS-AQ	Y(2) Y(5)
P At P Redu	30JMU51CP515	31UJH10010	M	H	SII	NS-AQ	Y(2) Y(5)
H2 Conc *UJA*	30JMU51CQ001	31UJH10011	M	H	SII	NS-AQ	Y(2) Y(5)
H2 Conc *UJA*	30JMU51CQ002	31UJH10011	M	H	SII	NS-AQ	Y(2) Y(5)
H2 Conc *UJA*	30JMU51CQ003	31UJH10011	M	H	SII	NS-AQ	Y(2) Y(5)

Table 3.11-1—List of Environmentally Qualified Electrical/I&C Equipment (Sheet 97 of 130)

Name Tag (Equipment Description)	Tag Number	Local Area KKS ID (Room Location)	EQ Environment (Note 1)	Radiation Environment Zone (Note 2)	EQ Designated Function (Note 3)	Safety Class (Note 4)	EQ Program Designation (Note 5)
H2 Conc *UJA*	30JMU51CQ004	31UJH10011	M	H	SII	NS-AQ	Y(2) Y(5)
Moisture Sensor	30JMU51CQ010	31UJH10010	M	H	SII	NS-AQ	Y(2) Y(5)
Moist Conc *UJA*	30JMU51CQ011	31UJH10011	M	H	SII	NS-AQ	Y(2) Y(5)
Moist Conc *UJA*	30JMU51CQ012	31UJH10011	M	H	SII	NS-AQ	Y(2) Y(5)
Moist Conc *UJA*	30JMU51CQ013	31UJH10011	M	H	SII	NS-AQ	Y(2) Y(5)
Moist Conc *UJA*	30JMU51CQ014	31UJH10011	M	H	SII	NS-AQ	Y(2) Y(5)
H2 Sensor	30JMU51CQ020	31UJH10010	M	H	SII	NS-AQ	Y(2) Y(5)
T Cabinet Heating	30JMU51CT010	31UJH10010	M	H	SII	NS-AQ	Y(2) Y(5)
T Cabinet Heating	30JMU51CT011	31UJH10010	M	H	SII	NS-AQ	Y(2) Y(5)
T At H2 Sensor	30JMU51CT012	31UJH10010	M	H	SII	NS-AQ	Y(2) Y(5)
T At Test Vessel	30JMU51CT013	31UJH10010	M	H	SII	NS-AQ	Y(2) Y(5)
Radiation Monitoring System (RMS)							
Radiation Monitoring Cabinet (Div 1)	30CLE20	31UJK18025	M	M	ES SI	S 1E EMC	Y (5) Y (6)
Radiation Monitoring Cabinet (Div 2)	30CLF20	32UJK18004	M	M	ES SI	S 1E EMC	Y (5) Y (6)
Radiation Monitoring Cabinet (Div 3)	30CLG20	33UJK18004	M	M	ES SI	S 1E EMC	Y (5) Y (6)
Radiation Monitoring Cabinet (Div 4)	30CLH20	34UJK18025	M	M	ES SI	S 1E EMC	Y (5) Y (6)
BBX Containment High Range Dose Rate	30JYK00GH007	30UFA29090	M	H	SI	S 1E EMC	Y (2) Y (5) Y (6)
BBX Containment High Range Dose Rate	30JYK00GH008	30UFA29090	M	H	SI	S 1E EMC	Y (2) Y (5) Y (6)
BBX Main Control Room Vent Duct Gamma	30JYK00GH061	32UJK31018	M	M	SI	S 1E EMC	Y (5) Y (6)
BBX Main Control Room Vent Duct Gamma	30JYK00GH062	33UJK31018	M	M	SI	S 1E EMC	Y (5) Y (6)
BBX Main Control Room Vent Duct Gamma	30JYK00GH109	32UJK31018	M	M	SI	S 1E EMC	Y (5)
BBX Main Control Room Vent Duct Gamma	30JYK00GH110	32UJK31018	M	M	SI	S 1E EMC	Y (5)
BBX Containment High Range Dose Rate	30JYK00GH111	30UFA29090	M	H	SI	S 1E EMC	Y (5)
BBX Containment High Range Dose Rate	30JYK00GH112	30UFA29090	M	H	SI	S 1E EMC	Y (5)
Containment High Range Dose Rate Monitor	30JYK15CR101	30UJA29016	H	H	ES PAM SI	S 1E EMC	Y(1) Y (5)
Containment High Range Dose Rate Monitor	30JYK15CR102	30UJA29016	H	H	ES PAM SI	S 1E EMC	Y(1) Y (5)
Containment High Range Dose Rate Monitor	30JYK15CR103	30UJA29016	H	H	ES PAM SI	S 1E EMC	Y(1) Y (5)
Containment High Range Dose Rate Monitor	30JYK28CR101	30UJA29016	H	H	ES PAM SI	S 1E EMC	Y(1) Y (5)
HVAC SYSTEMS							
Containment Building Ventilation System (CBVS)							
KLA1 Containment Iso Valve 42 ft FB	30KLA10AA001	30UFA21095	M	H	ES PAM SI	S 1E EMC	Y (2) Y (5) Y (6)
KLA1 Containment Iso Valve 42 ft RB	30KLA10AA003	30UJA18016	H	H	ES PAM SI	S 1E EMC	Y (1) Y (5)

Table 3.11-1—List of Environmentally Qualified Electrical/I&C Equipment (Sheet 98 of 130)

Name Tag (Equipment Description)	Tag Number	Local Area KKS ID (Room Location)	EQ Environment (Note 1)	Radiation Environment Zone (Note 2)	EQ Designated Function (Note 3)			Safety Class (Note 4)			EQ Program Designation (Note 5)			
KLA 5 tech rm Fire Damper Sup	30KLA10AA004	30UJA29015	H	H			SII	NS-AQ		EMC	Y (1)		Y (5)	
KLA1 Staircase Sup Fire Damp	30KLA10AA006	30UJA11020	H	H			SII	NS-AQ		EMC	Y (1)		Y (5)	
KLA 1 Staircase Sup Branch Fire Dmpr	30KLA10AA007	30UJA07013	H	H			SII	NS-AQ		EMC	Y (1)		Y (5)	
KLA 1 Staircase south Sup Fire Dmpr	30KLA10AA008	30UJA15010	H	H			SII	NS-AQ		EMC	Y (1)		Y (5)	
KLA2 Cont Iso Valve 48 ft FB	30KLA20AA001	30UJA23015	H	H	ES	PAM	SI	S	1E	EMC	Y (1)		Y (5)	
KLA2 Cont Iso Valve 48 ft RB	30KLA20AA003	30UFA24045	M	H	ES	PAM	SI	S	1E	EMC		Y (2)	Y (5)	Y (6)
KLA 2 Eq Comp Iso Valve	30KLA20AA004	30UJA23013	H	H			SII	NS-AQ		EMC	Y (1)		Y (5)	
KLA 5 Tech rm Fire Damper Exh	30KLA20AA007	30UJA29015	H	H			SII	NS-AQ		EMC	Y (1)		Y (5)	
North Staircase Exh Fire Dmpr	30KLA20AA009	30UJA34011	H	H			SII	NS-AQ		EMC	Y (1)		Y (5)	
South Staircase Exh Fire Dmpr	30KLA20AA010	30UJA29023	H	H			SII	NS-AQ		EMC	Y (1)		Y (5)	
KLA 2 Fire Damp UFA24045	30KLA20AA011	30UFA24045	M	H			SII	NS-AQ		EMC		Y (2)	Y (5)	Y (6)
KLA 2 Fire Damp UFA24081	30KLA20AA012	30UFA24081	M	H			SII	NS-AQ		EMC		Y (2)	Y (5)	Y (6)
KLA Purge Filtr Tr 1 Control Dmpr	30KLA21AA001	30UFA24081	M	H			SI	S	1E	EMC		Y (2)	Y (5)	Y (6)
KLA Purge Filter Tr 1 Isolation Damper 1	30KLA21AA004	30UFA24081	M	H			SI	S	1E	EMC		Y (2)	Y (5)	Y (6)
KLA Purge Filter Tr 1 Isolation Damper 2	30KLA21AA007	30UFA24081	M	H			SI	S	1E	EMC		Y (2)	Y (5)	Y (6)
Elec Air Heater KLA 2 Tr 1 Filt	30KLA21AH005	30UFA24081	M	H			SI	S	1E	EMC		Y (2)	Y (5)	Y (6)
KLA 2 Tr 1 Fan	30KLA21AN001	30UFA24085	M	H			SI	S	1E	EMC		Y (2)	Y (5)	Y (6)
KLA Purge Filtr Tr 2 Control Dmpr	30KLA22AA001	30UFA24081	M	H			SI	S	1E	EMC		Y (2)	Y (5)	Y (6)
KLA Purge Filter Tr 2 Isolation Damper 1	30KLA22AA004	30UFA24081	M	H			SI	S	1E	EMC		Y (2)	Y (5)	Y (6)
KLA Purge Filter Tr 2 Isolation Damper 2	30KLA22AA007	30UFA24081	M	H			SI	S	1E	EMC		Y (2)	Y (5)	Y (6)
Elec Air Heater KLA 2 Tr 2 Filt	30KLA22AH005	30UFA24081	M	H			SI	S	1E	EMC		Y (2)	Y (5)	Y (6)
KLA 2 Tr 2 Fan	30KLA22AN001	30UFA24085	M	H			SI	S	1E	EMC		Y (2)	Y (5)	Y (6)
KLA Plen Sup Motor Bal Dmpr	30KLA30AA001	30UFA21065	M	H			SII	NS-AQ		EMC		Y (2)	Y (5)	Y (6)
KLA3 Cont Iso Damp 32 ft FB	30KLA30AA002	30UFA17095	M	H	ES	PAM	SI	S	1E	EMC		Y (2)	Y (5)	Y (6)
KLA3 Cont Iso Damp 32 ft RB	30KLA30AA003	30UJA18016	H	H	ES	PAM	SI	S	1E	EMC	Y (1)		Y (5)	
Motor Control Dmpr 1 to FB KLL	30KLA30AA004	30UFA21065	M	H			SII	NS-AQ		EMC		Y (2)	Y (5)	Y (6)
Op Fl Motorized Control Damper Sup	30KLA30AA007	30UJA29013	H	H			SII	NS-AQ		EMC	Y (1)		Y (5)	
Motor Control Dmpr 2 to FB KLL	30KLA30AA008	30UFA21065	M	H			SII	NS-AQ		EMC		Y (2)	Y (5)	Y (6)
KLA4 Cont Iso Damp 32 ft RB	30KLA40AA001	30UJA18016	H	H	ES	PAM	SI	S	1E	EMC	Y (1)		Y (5)	
KLA4 Cont Iso Damp 32 ft FB	30KLA40AA002	30UFA17095	M	H	ES	PAM	SI	S	1E	EMC		Y (2)	Y (5)	Y (6)
KLA 4 Eq Comp Control Dmpr	30KLA40AA004	30UJA18016	H	H			SII	NS-AQ		EMC	Y (1)		Y (5)	
KLA 4 Eq Comp Iso Dmpr	30KLA40AA005	30UJA18016	H	H			SII	NS-AQ		EMC	Y (1)		Y (5)	
KLA 4 Fire Damper UFA24095	30KLA40AA006	30UFA24095	M	H			SII	NS-AQ		EMC		Y (2)	Y (5)	Y (6)

Table 3.11-1—List of Environmentally Qualified Electrical/I&C Equipment (Sheet 99 of 130)

Name Tag (Equipment Description)	Tag Number	Local Area KKS ID (Room Location)	EQ Environment (Note 1)	Radiation Environment Zone (Note 2)	EQ Designated Function (Note 3)	Safety Class (Note 4)			EQ Program Designation (Note 5)			
KLA 4 Sup Motor Louver Damper	30KLA40AA007	30UJA34015	H	H	SII	NS-AQ		EMC	Y (1)		Y (5)	
KLA 5 Filter Train Upstream Iso Dmpr	30KLA50AA002	30UJA29022	H	H	SI	S	1E	EMC	Y (1)		Y (5)	
KLA 5 Filter Train Downstream Iso Dmpr	30KLA50AA004	30UJA29022	H	H	SI	S	1E	EMC	Y (1)		Y (5)	
KLA 5 Elec Heater	30KLA50AH001	30UJA29022	H	H	SI	S	1E	EMC	Y (1)		Y (5)	
KLA 5 Tr 1 Fan	30KLA51AN001	30UJA29022	H	H	SI	S	1E	EMC	Y (1)		Y (5)	
KLA 5 Tr 2 Fan	30KLA52AN001	30UJA29022	H	H	SI	S	1E	EMC	Y (1)		Y (5)	
KLA 6 Rx Pit Suppy Fan 1	30KLA65AN001	30UJA15026	H	H	SI	S	1E	EMC	Y (1)		Y (5)	
KLA 6 Rx Pit Suppy Fan 3	30KLA65AN002	30UJA15027	H	H	SI	S	1E	EMC	Y (1)		Y (5)	
KLA 6 Rx Pit Supply Fan 2	30KLA66AN001	30UJA15026	H	H	SI	S	1E	EMC	Y (1)		Y (5)	
KLA 6 Rx Pit Supply Fan 4	30KLA66AN002	30UJA15027	H	H	SI	S	1E	EMC	Y (1)		Y (5)	
Pos Meas 1 KLA10AA001	30KLA10CG001A	30UFA15045	M	H	SI	S	1E	EMC		Y (2)	Y (5)	Y (6)
Pos Meas 2 KLA10AA001	30KLA10CG001B	30UFA15045	M	H	SI	S	1E	EMC		Y (2)	Y (5)	Y (6)
Pos Meas 1 KLA10AA003	30KLA10CG003A	30UJA18016	H	H	SI	S	1E	EMC	Y (1)		Y (5)	
Pos Meas 2 KLA10AA003	30KLA10CG003B	30UJA18016	H	H	SI	S	1E	EMC	Y (1)		Y (5)	
Press Meas 1 KLA Supply	30KLA10CP001	30UFA24095	M	H	SII	NS-AQ		EMC		Y (2)	Y (5)	Y (6)
Press Meas 2 KLA Supply	30KLA10CP002	30UFA24095	M	H	SII	NS-AQ		EMC		Y (2)	Y (5)	Y (6)
KLA Purge Vent DP Sens 1	30KLA20CP001	30UJA23013	H	H	SII	NS-AQ		EMC	Y (1)		Y (5)	
KLA Purge Vent DP Sens 2	30KLA20CP002	30UJA23013	H	H	SII	NS-AQ		EMC	Y (1)		Y (5)	
DP Meas KLA21AT001	30KLA21CP501	30UFA24081	M	H	SI	S	1E	EMC		Y (2)	Y (5)	Y (6)
DP Meas KLA21AT002	30KLA21CP502	30UFA24081	M	H	SI	S	1E	EMC		Y (2)	Y (5)	Y (6)
DP Meas KLA21AT003	30KLA21CP503	30UFA24081	M	H	SI	S	1E	EMC		Y (2)	Y (5)	Y (6)
DP Meas KLA21AT004	30KLA21CP504	30UFA24080	M	H	SI	S	1E	EMC		Y (2)	Y (5)	Y (6)
DP Meas 21 Filter Banks	30KLA21CP505	30UFA24081	M	H	SI	S	1E	EMC		Y (2)	Y (5)	Y (6)
Temp Meas KLA21AH005 Downstream	30KLA21CT001	30UFA24081	M	H	SI	S	1E	EMC		Y (2)	Y (5)	Y (6)
Temp Meas KLA21AH005 Upstream	30KLA21CT002	30UFA24081	M	H	SI	S	1E	EMC		Y (2)	Y (5)	Y (6)
KLA Purge Fitrl Tr 2 Flow Meas	30KLA22CF001	30UFA24081	M	H	SI	S	1E	EMC		Y (2)	Y (5)	Y (6)
DP Meas KLA22AT001	30KLA22CP501	30UFA24081	M	H	SI	S	1E	EMC		Y (2)	Y (5)	Y (6)
DP Meas KLA22AT002	30KLA22CP502	30UFA24081	M	H	SI	S	1E	EMC		Y (2)	Y (5)	Y (6)
DP Meas KLA22AT003	30KLA22CP503	30UFA24081	M	H	SI	S	1E	EMC		Y (2)	Y (5)	Y (6)
DP Meas KLA22AT004	30KLA22CP504	30UFA24081	M	H	SI	S	1E	EMC		Y (2)	Y (5)	Y (6)
DP Meas 22 Filter Banks	30KLA22CP505	30UFA24081	M	H	SI	S	1E	EMC		Y (2)	Y (5)	Y (6)
Temp Meas KLA22AH005 Downstream	30KLA22CT001	30UFA24081	M	H	SI	S	1E	EMC		Y (2)	Y (5)	Y (6)
Temp Meas KLA22AH005 Upstream	30KLA22CT002	30UFA24081	M	H	SI	S	1E	EMC		Y (2)	Y (5)	Y (6)

Table 3.11-1—List of Environmentally Qualified Electrical/I&C Equipment (Sheet 100 of 130)

Name Tag (Equipment Description)	Tag Number	Local Area KKS ID (Room Location)	EQ Environment (Note 1)	Radiation Environment Zone (Note 2)	EQ Designated Function (Note 3)	Safety Class (Note 4)			EQ Program Designation (Note 5)			
Pos Meas KLA30AA001	30KLA30CG001	30UFA21065	M	H	SII	NS-AQ		EMC		Y (2)	Y (5)	Y (6)
Pos Meas 1 KLA30AA002	30KLA30CG002A	30UFA17095	M	H	SI	S	1E	EMC		Y (2)	Y (5)	Y (6)
Pos Meas 2 KLA30AA002	30KLA30CG002B	30UFA17095	M	H	SI	S	1E	EMC		Y (2)	Y (5)	Y (6)
Pos Meas 1 KLA30AA003	30KLA30CG003A	30UJA18016	H	H	SI	S	1E	EMC	Y (1)		Y (5)	
Pos Meas 2 KLA30AA003	30KLA30CG003B	30UJA18016	H	H	SI	S	1E	EMC	Y (1)		Y (5)	
Pos Meas 1 KLA40AA002	30KLA40CG002A	30UFA21095	M	H	SI	S	1E	EMC		Y (2)	Y (5)	Y (6)
Pos Meas 2 KLA40AA002	30KLA40CG002B	30UFA21095	M	H	SI	S	1E	EMC		Y (2)	Y (5)	Y (6)
Pos Meas KLA40AA004	30KLA40CG004	30UJA18016	H	H	SII	NS-AQ		EMC	Y (1)		Y (5)	
KLA 5 Flow Measurement	30KLA50CF001	30UJA29022	H	H	SI	S	1E	EMC	Y (1)		Y (5)	
DP Meas KLA50AT001	30KLA50CP501	30UJA29022	H	H	SI	S	1E	EMC	Y (1)		Y (5)	
DP Meas KLA50AT002	30KLA50CP502	30UJA29022	H	H	SI	S	1E	EMC	Y (1)		Y (5)	
DP Meas KLA50AT003	30KLA50CP503	30UJA29022	H	H	SI	S	1E	EMC	Y (1)		Y (5)	
DP Meas KLA50AT004	30KLA50CP504	30UJA29022	H	H	SI	S	1E	EMC	Y (1)		Y (5)	
Temp Meas KLA50AH001	30KLA50CT001	30UJA29022	H	H	SI	S	1E	EMC	Y (1)		Y (5)	
KLA DP Sens 1 SG1	30KLA60CP851	30UFA13004	M	H	SI	S	1E	EMC		Y (2)	Y (5)	Y (6)
KLA DP Sens 1 SG2	30KLA60CP852	32UJH10002	M	H	SI	S	1E	EMC		Y (2)	Y (5)	Y (6)
KLA DP Sens 1 SG3	30KLA60CP853	33UJH10002	M	H	SI	S	1E	EMC		Y (2)	Y (5)	Y (6)
KLA DP Sens 1 SG4	30KLA60CP854	30UFA10052	M	H	SI	S	1E	EMC		Y (2)	Y (5)	Y (6)
KLA 6 Supply Air Temp Meas 1	30KLA61CT001	30UJA23017	H	H	SII	NS-AQ		EMC	Y (1)		Y (5)	
KLA 6 Supply Air Temp Meas 2	30KLA61CT002	30UJA23017	H	H	SII	NS-AQ		EMC	Y (1)		Y (5)	
KLA 6 RCP1 Air Temp Meas	30KLA61CT003	30UJA23002	H	H	SII	NS-AQ		EMC	Y (1)		Y (5)	
KLA 6 RCP2 Air Temp Meas	30KLA61CT004	30UJA34005	H	H	SII	NS-AQ		EMC	Y (1)		Y (5)	
KLA 6 SG1 Air Temp Meas	30KLA61CT005	30UJA34003	H	H	SII	NS-AQ		EMC	Y (1)		Y (5)	
KLA 6 SG2 Air Temp Meas	30KLA61CT006	30UJA34004	H	H	SII	NS-AQ		EMC	Y (1)		Y (5)	
KLA 6 Eq Comp CRDM Air Temp Meas	30KLA61CT007	30UJA15001	H	H	SII	NS-AQ		EMC	Y (1)		Y (5)	
KLA 6 FAL Valves Air Temp Meas	30KLA61CT008	30UJA23020	H	H	SII	NS-AQ		EMC	Y (1)		Y (5)	
KLA 6 KTA Pumps Air Temp Meas	30KLA61CT011	30UJA07022	H	H	SII	NS-AQ		EMC	Y (1)		Y (5)	
KLA 6 Supply Air Temp Meas 3	30KLA63CT001	30UJA23018	H	H	SII	NS-AQ		EMC	Y (1)		Y (5)	
KLA 6 Supply Air Temp Meas 4	30KLA63CT002	30UJA23018	H	H	SII	NS-AQ		EMC	Y (1)		Y (5)	
KLA 6 RCP3 Air Temp Meas	30KLA63CT003	30UJA34006	H	H	SII	NS-AQ		EMC	Y (1)		Y (5)	
KLA 6 RCP4 Air Temp Meas	30KLA63CT004	30UJA23009	H	H	SII	NS-AQ		EMC	Y (1)		Y (5)	
KLA 6 SG3 Air Temp Meas	30KLA63CT005	30UJA34007	H	H	SII	NS-AQ		EMC	Y (1)		Y (5)	
KLA 6 SG4 Air Temp Meas	30KLA63CT006	30UJA34008	H	H	SII	NS-AQ		EMC	Y (1)		Y (5)	

Table 3.11-1—List of Environmentally Qualified Electrical/I&C Equipment (Sheet 101 of 130)

Name Tag (Equipment Description)	Tag Number	Local Area KKS ID (Room Location)	EQ Environment (Note 1)	Radiation Environment Zone (Note 2)	EQ Designated Function (Note 3)	Safety Class (Note 4)	EQ Program Designation (Note 5)
KLA 6 Safety Relief Valve rm Air Temp	30KLA63CT008	30UJA34019	H	H	SII	NS-AQ EMC	Y (1) Y (5)
KLA 6 UJA11024 Air Temp Meas	30KLA63CT009	30UJA11024	H	H	SII	NS-AQ EMC	Y (1) Y (5)
KLA 6 UJA11022 Air Temp Meas	30KLA63CT010	30UJA11022	H	H	SII	NS-AQ EMC	Y (1) Y (5)
KLA 6 Temp Sensor Primary Pipe 1	30KLA65CT001	30UJA11001	H	H	SII	NS-AQ EMC	Y (1) Y (5)
KLA 6 Temp Sensor Primary Pipe 2	30KLA65CT002	30UJA11001	H	H	SII	NS-AQ EMC	Y (1) Y (5)
KLA 6 Temp Sensor Primary Pipe 3	30KLA65CT003	30UJA11001	H	H	SII	NS-AQ EMC	Y (1) Y (5)
KLA 6 Temp Sensor Primary Pipe 4	30KLA65CT004	30UJA11001	H	H	SII	NS-AQ EMC	Y (1) Y (5)
KLA 6 Temp Sensor Primary Pipe 5	30KLA65CT005	30UJA11001	H	H	SII	NS-AQ EMC	Y (1) Y (5)
KLA 6 Temp Sensor Primary Pipe 6	30KLA65CT006	30UJA11001	H	H	SII	NS-AQ EMC	Y (1) Y (5)
KLA 6 Temp Sensor Primary Pipe 7	30KLA65CT007	30UJA11001	H	H	SII	NS-AQ EMC	Y (1) Y (5)
KLA 6 Temp Sensor Primary Pipe 8	30KLA65CT008	30UJA11001	H	H	SII	NS-AQ EMC	Y (1) Y (5)
KLA DP Sens 3 SG1	30KLA70CP801	30UFA13004	M	H	PAM SI	S 1E EMC	Y (2) Y (5) Y (6)
KLA DP Sens 3 SG2	30KLA70CP802	32UJH10002	M	H	PAM SI	S 1E EMC	Y (2) Y (5) Y (6)
KLA DP Sens 3 SG3	30KLA70CP803	33UJH10002	M	H	PAM SI	S 1E EMC	Y (2) Y (5) Y (6)
KLA DP Sens 3 SG4	30KLA70CP804	30UFA10052	M	H	PAM SI	S 1E EMC	Y (2) Y (5) Y (6)
KLA DP Sens 2 SG1	30KLA70CP851	30UFA13004	M	H	SI	S 1E EMC	Y (2) Y (5) Y (6)
KLA DP Sens 2 SG2	30KLA70CP852	32UJH10002	M	H	SI	S 1E EMC	Y (2) Y (5) Y (6)
KLA DP Sens 2 SG3	30KLA70CP853	33UJH10002	M	H	SI	S 1E EMC	Y (2) Y (5) Y (6)
KLA DP Sens 2 SG4	30KLA70CP854	30UFA10052	M	H	SI	S 1E EMC	Y (2) Y (5) Y (6)
KLA 7 UJA40001 Temp Sens 1	30KLA71CT001	30UJA40001	H	H	SII	NS-AQ EMC	Y (1) Y (5)
KLA 7 UJA40001 Temp Sens 2	30KLA71CT002	30UJA40001	H	H	SII	NS-AQ EMC	Y (1) Y (5)
KLA 7 UJA34014 Temp Sens 1	30KLA71CT003	30UJA34014	H	H	SII	NS-AQ EMC	Y (1) Y (5)
KLA 7 UJA34015 Temp Sens 1	30KLA71CT004	30UJA34015	H	H	SII	NS-AQ EMC	Y (1) Y (5)
KLA 7 Setdown Area Op Fl Temp Sens	30KLA71CT005	30UJA29013	H	H	SII	NS-AQ EMC	Y (1) Y (5)
KLA 7 Access Area Eq Hatch Temp Sens	30KLA71CT006	30UJA29016	H	H	SII	NS-AQ EMC	Y (1) Y (5)
KLA 7 Inst Meas Table Temp Sens	30KLA71CT007	30UJA23041	H	H	SII	NS-AQ EMC	Y (1) Y (5)
KLA 7 JND JNG Valv Lp 1 Temp Sens	30KLA71CT009	30UJA11025	H	H	SII	NS-AQ EMC	Y (1) Y (5)
KLA 7 JND JNG Valv Lp 2 Temp Sens	30KLA71CT010	30UJA11026	H	H	SII	NS-AQ EMC	Y (1) Y (5)
KLA 7 JND JNG Valv Lp 3 Temp Sens	30KLA71CT011	30UJA11027	H	H	SII	NS-AQ EMC	Y (1) Y (5)
KLA 7 JND JNG Valv Lp 4 Temp Sens	30KLA71CT012	30UJA11028	H	H	SII	NS-AQ EMC	Y (1) Y (5)
KLA 7 LCQ Flash Tk Temp Sens	30KLA71CT013	30UJA11018	H	H	SII	NS-AQ EMC	Y (1) Y (5)
KLA 7 LCQ Heat Exchgr Temp Sensor	30KLA71CT014	30UJA07018	H	H	SII	NS-AQ EMC	Y (1) Y (5)
KLA 7 Hot Pip Pen Temp Sens	30KLA71CT015	30UJA07016	H	H	SII	NS-AQ EMC	Y (1) Y (5)

Table 3.11-1—List of Environmentally Qualified Electrical/I&C Equipment (Sheet 102 of 130)

Name Tag (Equipment Description)	Tag Number	Local Area KKS ID (Room Location)	EQ Environment (Note 1)	Radiation Environment Zone (Note 2)	EQ Designated Function (Note 3)	Safety Class (Note 4)	EQ Program Designation (Note 5)
Annulus Ventilation System (AVS)							
Actuator Supply Damper (Train 21)	30KLB21AA003	30UFA17084	M	H	ES SI	S 1E EMC	Y (2) Y (5) Y (6)
Actuator Exhaust Damper (Train 21)	30KLB21AA004	30UFA17084	M	H	ES SI	S 1E EMC	Y (2) Y (5) Y (6)
Electric Heater (Train 21)	30KLB21AH001	30UFA17084	M	H	ES SI	S 1E EMC	Y (2) Y (5) Y (6)
Exhaust Fan (Train 21)	30KLB21AN001	30UFA17083	M	H	ES SI	S 1E EMC	Y (2) Y (5) Y (6)
Actuator Supply Damper (Train 24)	30KLB24AA003	30UFA17082	M	H	ES SI	S 1E EMC	Y (2) Y (5) Y (6)
Actuator Exhaust Damper (Train 24)	30KLB24AA004	30UFA17082	M	H	ES SI	S 1E EMC	Y (2) Y (5) Y (6)
Electric Heater (Train 24)	30KLB24AH001	30UFA17082	M	H	ES SI	S 1E EMC	Y (2) Y (5) Y (6)
Exhaust Fan (Train 24)	30KLB24AN001	30UFA17081	M	H	ES SI	S 1E EMC	Y (2) Y (5) Y (6)
Actuator Supply Air Isolation Damper	30KLB34AA002	30UFA21095	M	H	ES SI	S 1E EMC	Y (2) Y (5) Y (6)
Actuator Supply Air Isolation Damper	30KLB34AA003	30UFA21095	M	H	ES SI	S 1E EMC	Y (2) Y (5) Y (6)
Actuator Exhaust Air Isolation Damper	30KLB44AA002	30UFA29054	M	H	ES SI	S 1E EMC	Y (2) Y (5) Y (6)
Actuator Exhaust Air Isolation Damper	30KLB44AA003	30UFA29054	M	H	ES SI	S 1E EMC	Y (2) Y (5) Y (6)
Accident Filtration Train Flow Sensor	30KLB21CF001A	30UFA21095	M	H	ES SI	S 1E EMC	Y (2) Y (5) Y (6)
Accident Filtration Train Flow Sensor	30KLB21CF001B	30UFA21095	M	H	ES SI	S 1E EMC	Y (2) Y (5) Y (6)
Exhaust Fan Pressure Limit Switch Sensor	30KLB21CP002	30UFA17083	M	H	ES SI	S 1E EMC	Y (2) Y (5) Y (6)
Pre- And HEPA Filter DP Gauge (Train 21)	30KLB21CP501	30UFA17084	M	H	ES SI	S 1E EMC	Y (2) Y (5) Y (6)
HEPA Filter DP Gauge (Train 21)	30KLB21CP502	30UFA17084	M	H	ES SI	S 1E EMC	Y (2) Y (5) Y (6)
Iodine Adsorber DP Gauge (Train 21)	30KLB21CP503	30UFA17084	M	H	ES SI	S 1E EMC	Y (2) Y (5) Y (6)
Downstream HEPA Filter DP Gauge	30KLB21CP504	30UFA17084	M	H	ES SI	S 1E EMC	Y (2) Y (5) Y (6)
Filter Bank DP Gauge (Train 21)	30KLB21CP505	30UFA17084	M	H	ES SI	S 1E EMC	Y (2) Y (5) Y (6)
Temperature Sensor Upstream of Heater	30KLB21CT001	30UFA17084	M	H	ES SI	S 1E EMC	Y (2) Y (5) Y (6)
Temp Limit Switch Sensor for Heater	30KLB21CT002	30UFA17084	M	H	ES SI	S 1E EMC	Y (2) Y (5) Y (6)
Temperature Regulation Sensor for Heater	30KLB21CT003	30UFA17084	M	H	ES SI	S 1E EMC	Y (2) Y (5) Y (6)
Exhaust Fan Pressure Limit Switch Sensor	30KLB24CP002	30UFA17081	M	H	ES SI	S 1E EMC	Y (2) Y (5) Y (6)
Pre- and HEPA Filter DP Gauge (Train 24)	30KLB24CP501	30UFA17082	M	H	ES SI	S 1E EMC	Y (2) Y (5) Y (6)
HEPA Filter DP Gauge (Train 24)	30KLB24CP502	30UFA17084	M	H	ES SI	S 1E EMC	Y (2) Y (5) Y (6)
Iodine Adsorber DP Gauge (Train 24)	30KLB24CP503	30UFA17082	M	H	ES SI	S 1E EMC	Y (2) Y (5) Y (6)
Downstream HEPA Filter DP Gauge	30KLB24CP504	30UFA17082	M	H	ES SI	S 1E EMC	Y (2) Y (5) Y (6)
Filter Bank DP Gauge (Train 24)	30KLB24CP505	30UFA17084	M	H	ES SI	S 1E EMC	Y (2) Y (5) Y (6)
Temperature Sensor Upstream of Heater	30KLB24CT001	30UFA17082	M	H	ES SI	S 1E EMC	Y (2) Y (5) Y (6)
Temp Limit Switch Sensor for Heater	30KLB24CT002	30UFA17082	M	H	ES SI	S 1E EMC	Y (2) Y (5) Y (6)
Temperature Regulation Sonsor for Heater	30KLB24CT003	30UFA17082	M	H	ES SI	S 1E EMC	Y (2) Y (5) Y (6)

Table 3.11-1—List of Environmentally Qualified Electrical/I&C Equipment (Sheet 103 of 130)

Name Tag (Equipment Description)	Tag Number	Local Area KKS ID (Room Location)	EQ Environment (Note 1)	Radiation Environment Zone (Note 2)	EQ Designated Function (Note 3)	Safety Class (Note 4)	EQ Program Designation (Note 5)
Safeguard Building Controlled Area Ventilation System (SBVS)							
Vol Cont Dmpr Sup, Div 1	30KLC11AA003	31UJH05025	M	H	SI	S 1E EMC	Y (2) Y (5) Y (6)
Iso Dmpr 1 Sup, Div 1	30KLC11AA004	31UJH05025	M	H	SI	S 1E EMC	Y (2) Y (5) Y (6)
Iso Dmpr 2 Sup, Div 1	30KLC11AA005	31UJH05025	M	H	SI	S 1E EMC	Y (2) Y (5) Y (6)
Sup Is Dmpr, Div 1, SG1	30KLC11AA007	31UJH05006	M	H	SI	S 1E EMC	Y (2) Y (5) Y (6)
Vol Cont Dmpr Sup, Div 2	30KLC12AA003	32UJH01020	M	H	SI	S 1E EMC	Y (2) Y (5) Y (6)
Sup Iso Dmpr 1, Div 2	30KLC12AA004	32UJH01020	M	H	SI	S 1E EMC	Y (2) Y (5) Y (6)
Sup Iso Dmpr 2, Div 2	30KLC12AA005	32UJH01020	M	H	SI	S 1E EMC	Y (2) Y (5) Y (6)
Sup Iso Dmpr 1, Air Lock, SG2	30KLC12AA009	32UJH10006	M	H	SI	S 1E EMC	Y (2) Y (5) Y (6)
Sup Iso Dmpr 2, Air Lock, SG2	30KLC12AA010	32UJH10006	M	H	SI	S 1E EMC	Y (2) Y (5) Y (6)
Vol Cont Dmpr Sup, Div 3	30KLC13AA003	33UJH01020	M	H	SI	S 1E EMC	Y (2) Y (5) Y (6)
Sup Iso Dmpr 1, Div 3	30KLC13AA004	33UJH01020	M	H	SI	S 1E EMC	Y (2) Y (5) Y (6)
Sup Iso Dmpr 2, Div 3	30KLC13AA005	33UJH01020	M	H	SI	S 1E EMC	Y (2) Y (5) Y (6)
Vol Cont Dmpr Sup, Div 4	30KLC14AA003	34UJH05025	M	H	SI	S 1E EMC	Y (2) Y (5) Y (6)
Sup Iso Dmpr 1, Div 4	30KLC14AA004	34UJH05025	M	H	SI	S 1E EMC	Y (2) Y (5) Y (6)
Sup Iso Dmpr 2, Div 4	30KLC14AA005	34UJH05025	M	H	SI	S 1E EMC	Y (2) Y (5) Y (6)
Sup Iso Dmpr, Div 4	30KLC14AA007	34UJH05006	M	H	SI	S 1E EMC	Y (2) Y (5) Y (6)
Exh Dmpr KAA Vlv Rm, Anteroom, SG1	30KLC21AA002	31UJH10004	M	H	SI	S 1E EMC	Y (2) Y (5) Y (6)
Exh Iso Dmpr, SG1	30KLC21AA005	31UJH10004	M	H	SI	S 1E EMC	Y (2) Y (5) Y (6)
Oper Ex Vol Cntrl Dmpr, Div 1	30KLC21AA006	31UJH10010	M	H	SI	S 1E EMC	Y (2) Y (5) Y (6)
Oper Ex Iso Dmpr 1, Div 1	30KLC21AA007	31UJH10010	M	H	SI	S 1E EMC	Y (2) Y (5) Y (6)
Oper Ex Iso Dmpr 2, Div 1	30KLC21AA008	31UJH10010	M	H	SI	S 1E EMC	Y (2) Y (5) Y (6)
Oper Ex Iso Dmpr 2, Div 1	30KLC21AA010	31UJH10010	M	H	SI	S 1E EMC	Y(2) Y(5) Y(6)
Oper Ex Vol Cntrl Dmpr, Div 2	30KLC22AA006	32UJH10002	M	H	SI	S 1E EMC	Y (2) Y (5) Y (6)
Oper Ex Iso Dmpr 1, Div 2	30KLC22AA007	32UJH10002	M	H	SI	S 1E EMC	Y (2) Y (5) Y (6)
Oper Ex Iso Dmpr 2, Div 2	30KLC22AA008	32UJH10002	M	H	SI	S 1E EMC	Y (2) Y (5) Y (6)
Exh Iso Dmpr, Air Lock, SG2	30KLC22AA010	32UJH10006	M	H	SI	S 1E EMC	Y (2) Y (5) Y (6)
Oper Ex Vol Cntrl Dmpr, Div 3	30KLC23AA006	33UJH10002	M	H	SI	S 1E EMC	Y (2) Y (5) Y (6)
Oper Ex Iso Dmpr 1, Div 3	30KLC23AA007	33UJH10002	M	H	SI	S 1E EMC	Y (2) Y (5) Y (6)
Oper Ex Iso Dmpr 2, Div 3	30KLC23AA008	33UJH10002	M	H	SI	S 1E EMC	Y (2) Y (5) Y (6)
Exh Iso Dmpr, JMU Rm, SG4	30KLC24AA002	34UJH10004	M	H	SI	S 1E EMC	Y (2) Y (5) Y (6)
Sup Iso Dmpr, Anteroom, Div 4	30KLC24AA003	34UJH05006	M	H	SI	S 1E EMC	Y (2) Y (5) Y (6)
Sup Iso Dmpr, Anteroom, Div 4	30KLC24AA004	34UJH01011	M	H	SI	S 1E EMC	Y (2) Y (5) Y (6)

Table 3.11-1—List of Environmentally Qualified Electrical/I&C Equipment (Sheet 104 of 130)

Name Tag (Equipment Description)	Tag Number	Local Area KKS ID (Room Location)	EQ Environment (Note 1)	Radiation Environment Zone (Note 2)	EQ Designated Function (Note 3)	Safety Class (Note 4)			EQ Program Designation (Note 5)		
Exh Iso Dmpr, Div 4	30KLC24AA005	34UJH10004	M	H	SI	S	1E	EMC	Y (2)	Y (5)	Y (6)
Oper Ex Vol Cntrl Dmpr, Div 4	30KLC24AA006	34UJH10010	M	H	SI	S	1E	EMC	Y (2)	Y (5)	Y (6)
Oper Ex Iso Dmpr 1, Div 4	30KLC24AA007	34UJH10010	M	H	SI	S	1E	EMC	Y (2)	Y (5)	Y (6)
Oper Ex Iso Dmpr 2, Div 4	30KLC24AA008	34UJH10010	M	H	SI	S	1E	EMC	Y (2)	Y (5)	Y (6)
Oper Ex Iso Dmpr 2, Div 1	30KLC24AA010	34UJH10004	M	H	SI	S	1E	EMC	Y (2)	Y (5)	Y (6)
Acc Ex Iso Dmpr Vlv Rm, Div 1	30KLC31AA001	31UJH10004	M	H	SI	S	1E	EMC	Y (2)	Y (5)	Y (6)
Acc Ex Iso Dmpr Vlv Rm, Div 1	30KLC31AA003	31UJH10004	M	H	SI	S	1E	EMC	Y (2)	Y (5)	Y (6)
Acc Ex Iso Dmpr Vlv Rm, Div 2	30KLC32AA003	32UJH10002	M	H	Si	S	1E	EMC	Y (2)	Y (5)	Y (6)
Acc Ex Iso Dmpr Vlv Rm, Div 3	30KLC33AA001	33UJH10002	M	H	SI	S	1E	EMC	Y (2)	Y (5)	Y (6)
Acc Ex Iso Dmpr Vlv Rm, Div 3	30KLC33AA003	33UJH10002	M	H	SI	S	1E	EMC	Y (2)	Y (5)	Y (6)
Acc Ex Iso Dmpr Vlv Rm, Div 4	30KLC34AA001	34UJH10004	M	H	SI	S	1E	EMC	Y (2)	Y (5)	Y (6)
Acc Ex Iso Dmpr Vlv Rm, Div 4	30KLC34AA003	34UJH10004	M	H	SI	S	1E	EMC	Y (2)	Y (5)	Y (6)
Iso Dmpr 1, Acc Ex Tr 1	30KLC41AA001	30UFA21082	M	H	SI	S	1E	EMC	Y (2)	Y (5)	Y (6)
Iso Dmpr 2, Acc Ex Tr 1	30KLC41AA002	30UFA21082	M	H	SI	S	1E	EMC	Y (2)	Y (5)	Y (6)
Elec Air Preheater, Accident Filt Tr 1	30KLC41AH001	30UFA21082	M	H	SI	S	1E	EMC	Y (2)	Y (5)	Y (6)
Exhaust Fan, Accident Filtr Tr 1	30KLC41AN001	30UFA21083	M	H	SI	S	1E	EMC	Y (2)	Y (5)	Y (6)
Iso Dmpr 1, Acc Ex Tr 2	30KLC42AA001	30UFA21084	M	H	SI	S	1E	EMC	Y (2)	Y (5)	Y (6)
Elec Air Preheater, Accident Filt Tr 2	30KLC42AH001	30UFA21084	M	H	SI	S	1E	EMC	Y (2)	Y (5)	Y (6)
Exhaust Fan, Accident Filtr Tr 2	30KLC42AN001	30UFA21081	M	H	SI	S	1E	EMC	Y (2)	Y (5)	Y (6)
Acc Ex Sw Iso Dmpr 1	30KLC45AA001	30UFA21095	M	H	SI	S	1E	EMC	Y (2)	Y (5)	Y (6)
Acc Ex Sw Iso Dmpr 2	30KLC45AA002	30UFA21095	M	H	SI	S	1E	EMC	Y (2)	Y (5)	Y (6)
Acc Ex Sw Iso Dmpr 3	30KLC45AA003	30UFA29045	M	H	SI	S	1E	EMC	Y (2)	Y (5)	Y (6)
Acc Ex Sw Iso Dmpr 4	30KLC45AA004	30UFA29045	M	H	SI	S	1E	EMC	Y (2)	Y (5)	Y (6)
Acc Ex Sw Iso Dmpr 5	30KLC45AA005	30UFA24045	M	H	SI	S	1E	EMC	Y (2)	Y (5)	Y (6)
Acc Ex Sw Iso Dmpr 6	30KLC45AA006	30UFA24045	M	H	SI	S	1E	EMC	Y (2)	Y (5)	Y (6)
Fan Recirc Unit, KLC SG1	30KLC51AN001	31UJH05004	M	H	SI	S	1E	EMC	Y (2)	Y (5)	Y (6)
Fan Recirc Unit, KAA vlv rm, SG1	30KLC51AN002	31UJH10004	M	H	SI	S	1E	EMC	Y (2)	Y (5)	Y (6)
Fan Recirc Unit, JMU rm, SG1	30KLC51AN003	31UJH10010	M	H	SI	S	1E	EMC	Y (2)	Y (5)	Y (6)
Fan Recirc Unit, KLC SG2	30KLC52AN001	32UJH05002	M	H	SI	S	1E	EMC	Y (2)	Y (5)	Y (6)
Fan Recirc Unit, Vlv Rm, KLC SG2	30KLC52AN002	32UJH10002	M	H	SI	S	1E	EMC	Y (2)	Y (5)	Y (6)
Fan Recirc Unit, KLC SG3	30KLC53AN001	33UJH05002	M	H	SI	S	1E	EMC	Y (2)	Y (5)	Y (6)
Fan Recirc Unit, Vlv Rm, KLC SG3	30KLC53AN002	33UJH10002	M	H	SI	S	1E	EMC	Y (2)	Y (5)	Y (6)
Fan Recirc Unit, KLC SG4	30KLC54AN001	34UJH05004	M	H	SI	S	1E	EMC	Y (2)	Y (5)	Y (6)

Table 3.11-1—List of Environmentally Qualified Electrical/I&C Equipment (Sheet 105 of 130)

Name Tag (Equipment Description)	Tag Number	Local Area KKS ID (Room Location)	EQ Environment (Note 1)	Radiation Environment Zone (Note 2)	EQ Designated Function (Note 3)		Safety Class (Note 4)			EQ Program Designation (Note 5)		
Fan Recirc Unit, KAA Vlv Rm, SG4	30KLC54AN002	34UJH10004	M	H		SI	S	1E	EMC	Y (2)	Y (5)	Y (6)
Fan Recirc Unit, JMU Rm, SG4	30KLC54AN003	34UJH10010	M	H		SI	S	1E	EMC	Y (2)	Y (5)	Y (6)
Annulus Pressure Sensor (Train 21)	30KLB21CP001	30UFA24045	M	H	ES	SI	S	1E	EMC	Y (2)	Y (5)	Y (6)
Annulus Pressure Sensor (Train 24)	30KLB24CP001	30UFA17095	M	H	ES	SI	S	1E	EMC	Y (2)	Y (5)	Y (6)
Pos Meas, KLC11AA003	30KLC11CG003	31UJH05025	M	H		SI	S	1E	EMC	Y (2)	Y (5)	Y (6)
DP 1 Passageway SG1	30KLC11CP001	31UJH05006	M	H		SI	S	1E	EMC	Y (2)	Y (5)	Y (6)
DP 2 Passageway SG1	30KLC11CP002	31UJH05006	M	H		SI	S	1E	EMC	Y (2)	Y (5)	Y (6)
DP Passageway, Anteroom, SG1	30KLC11CP501	31UJH01001	M	H		SI	S	1E	EMC	Y (2)	Y (5)	Y (6)
Pos Meas KLC12AA003	30KLC12CG003	32UJH01020	M	H		SI	S	1E	EMC	Y (2)	Y (5)	Y (6)
DP 1 Serv Corr, SG2	30KLC12CP001	32UJH05005	M	H		SI	S	1E	EMC	Y (2)	Y (5)	Y (6)
DP 2 Serv Corr, SG2	30KLC12CP002	32UJH05005	M	H		SI	S	1E	EMC	Y (2)	Y (5)	Y (6)
DP Serv Corr, Vlv Rm, SG2	30KLC12CP501	32UJH01005	M	H		SI	S	1E	EMC	Y (2)	Y (5)	Y (6)
Pos Meas KLC13AA003	30KLC13CG003	33UJH01020	M	H		SI	S	1E	EMC	Y (2)	Y (5)	Y (6)
DP 1 Serv Corr, SG3	30KLC13CP001	32UJH05005	M	H		SI	S	1E	EMC	Y (2)	Y (5)	Y (6)
DP 2 Serv Corr, SG3	30KLC13CP002	32UJH05005	M	H		SI	S	1E	EMC	Y (2)	Y (5)	Y (6)
DP Serv Corr, Vlv Rm, SG3	30KLC13CP501	33UJH01003	M	H		SI	S	1E	EMC	Y (2)	Y (5)	Y (6)
Pos Meas KLC14AA003	30KLC14CG003	34UJH05025	M	H		SI	S	1E	EMC	Y (2)	Y (5)	Y (6)
DP 1 Serv Corr, Div 4	30KLC14CP001	34UJH05006	M	H		SI	S	1E	EMC	Y (2)	Y (5)	Y (6)
DP 2 Serv Corr, Div 4	30KLC14CP002	34UJH05006	M	H		SI	S	1E	EMC	Y (2)	Y (5)	Y (6)
Dp Sens, Serv Corr, Anteroom, Div 4	30KLC14CP501	34UJH01001	M	H		SI	S	1E	EMC	Y (2)	Y (5)	Y (6)
Pos Meas Dmpr KLC21AA006	30KLC21CG006	31UJH10010	M	H		SI	S	1E	EMC	Y (2)	Y (5)	Y (6)
Pos Meas Dmpr KLC22AA006	30KLC22CG006	32UJH10002	M	H		SI	S	1E	EMC	Y (2)	Y (5)	Y (6)
Pos Meas Dmpr KLC24AA006	30KLC24CG006	34UJH10010	M	H		SI	S	1E	EMC	Y (2)	Y (5)	Y (6)
DP 1, SG1	30KLC31CP851	32UJH10001	M	H		SI	S	1E	EMC	Y (2)	Y (5)	Y (6)
DP 2, SG1	30KLC31CP852	32UJH10001	M	H		SI	S	1E	EMC	Y (2)	Y (5)	Y (6)
DP 3, SG1	30KLC31CP853	32UJH10001	M	H		SI	S	1E	EMC	Y (2)	Y (5)	Y (6)
DP 4, SG1	30KLC31CP854	32UJH10001	M	H		SI	S	1E	EMC	Y (2)	Y (5)	Y (6)
DP 1, SG2	30KLC32CP851	32UJH10001	M	H		SI	S	1E	EMC	Y (2)	Y (5)	Y (6)
DP 2, SG2	30KLC32CP852	32UJH10001	M	H		SI	S	1E	EMC	Y (2)	Y (5)	Y (6)
DP 3, SG2	30KLC32CP853	32UJH10001	M	H		SI	S	1E	EMC	Y (2)	Y (5)	Y (6)
DP 4, SG2	30KLC32CP854	32UJH10001	M	H		SI	S	1E	EMC	Y (2)	Y (5)	Y (6)
DP 1, SG3	30KLC33CP851	33UJH10001	M	H		SI	S	1E	EMC	Y (2)	Y (5)	Y (6)
DP 2, SG3	30KLC33CP852	33UJH10001	M	H		SI	S	1E	EMC	Y (2)	Y (5)	Y (6)

Table 3.11-1—List of Environmentally Qualified Electrical/I&C Equipment (Sheet 106 of 130)

Name Tag (Equipment Description)	Tag Number	Local Area KKS ID (Room Location)	EQ Environment (Note 1)	Radiation Environment Zone (Note 2)	EQ Designated Function (Note 3)	Safety Class (Note 4)			EQ Program Designation (Note 5)		
DP 3, SG3	30KLC33CP853	33UJH10001	M	H	SI	S	1E	EMC	Y (2)	Y (5)	Y (6)
DP 4, SG3	30KLC33CP854	33UJH10001	M	H	SI	S	1E	EMC	Y (2)	Y (5)	Y (6)
DP 1, SG4	30KLC34CP851	33UJH10001	M	H	SI	S	1E	EMC	Y (2)	Y (5)	Y (6)
DP 2, SG4	30KLC34CP852	33UJH10001	M	H	SI	S	1E	EMC	Y (2)	Y (5)	Y (6)
DP 3, SG4	30KLC34CP853	33UJH10001	M	H	SI	S	1E	EMC	Y (2)	Y (5)	Y (6)
DP 4, SG4	30KLC34CP854	33UJH10001	M	H	SI	S	1E	EMC	Y (2)	Y (5)	Y (6)
DP, Acc Ex Tr 1	30KLC41CP001	30UFA21082	M	H	SI	S	1E	EMC	Y (2)	Y (5)	Y (6)
DP KLC41AT001	30KLC41CP501	30UFA21082	M	H	SI	S	1E	EMC	Y (2)	Y (5)	Y (6)
DP KLC41AT002	30KLC41CP502	30UFA21082	M	H	SI	S	1E	EMC	Y (2)	Y (5)	Y (6)
DP KLC41AT003	30KLC41CP503	30UFA21082	M	H	SI	S	1E	EMC	Y (2)	Y (5)	Y (6)
DP KLC41AT004	30KLC41CP504	30UFA21082	M	H	SI	S	1E	EMC	Y (2)	Y (5)	Y (6)
Upstream Temp, Acc Ex Tr 1	30KLC41CT001	30UFA21082	M	H	SI	S	1E	EMC	Y (2)	Y (5)	Y (6)
DP, Acc Ex Tr 2	30KLC42CP001	30UFA21084	M	H	SI	S	1E	EMC	Y (2)	Y (5)	Y (6)
DP KLC42AT001	30KLC42CP501	30UFA21084	M	H	SI	S	1E	EMC	Y (2)	Y (5)	Y (6)
DP KLC42AT002	30KLC42CP502	30UFA21084	M	H	SI	S	1E	EMC	Y (2)	Y (5)	Y (6)
DP KLC42AT003	30KLC42CP503	30UFA21084	M	H	SI	S	1E	EMC	Y (2)	Y (5)	Y (6)
DP KLC42AT004	30KLC42CP504	30UFA21084	M	H	SI	S	1E	EMC	Y (2)	Y (5)	Y (6)
Upstream Temp, Acc Ex Tr 2	30KLC42CT001	30UFA21084	M	H	SI	S	1E	EMC	Y (2)	Y (5)	Y (6)
Flow Meas 1 Tot Acc Ex	30KLC45CF001	30UFA21095	M	H	SI	S	1E	EMC	Y (2)	Y (5)	Y (6)
Flow Meas 2 Tot Acc Ex	30KLC45CF002	30UFA21095	M	H	SI	S	1E	EMC	Y (2)	Y (5)	Y (6)
Temp Sens 1 JND Pump Rm, SG1	30KLC51CT001	31UJH01002	M	H	SI	S	1E	EMC	Y (2)	Y (5)	Y (6)
Temp Sens 2 JND Pump Rm, SG1	30KLC51CT002	31UJH01002	M	H	SI	S	1E	EMC	Y (2)	Y (5)	Y (6)
Temp Sens 1 JNG Pump Rm, SG1	30KLC51CT003	31UJH01006	M	H	SI	S	1E	EMC	Y (2)	Y (5)	Y (6)
Temp Sens 2 JNG Pump Rm, SG1	30KLC51CT004	31UJH01006	M	H	SI	S	1E	EMC	Y (2)	Y (5)	Y (6)
Temp Sens 1 KAA Vlv Rm, SG1	30KLC51CT005	31UJH10004	M	H	SI	S	1E	EMC	Y (2)	Y (5)	Y (6)
Temp Sens 2 KAA Vlv Rm, SG1	30KLC51CT006	31UJH10004	M	H	SI	S	1E	EMC	Y (2)	Y (5)	Y (6)
Temp Sens 1 JMU Rm, SG1	30KLC51CT007	31UJH10010	M	H	SI	S	1E	EMC	Y (2)	Y (5)	Y (6)
Temp Sens 2 JMU Rm, SG1	30KLC51CT008	31UJH10010	M	H	SI	S	1E	EMC	Y (2)	Y (5)	Y (6)
Temp Sens 1, JND Pump Rm, SG2	30KLC52CT001	32UJH01007	M	H	SI	S	1E	EMC	Y (2)	Y (5)	Y (6)
Temp Sens 2, JND Pump Rm, SG2	30KLC52CT002	32UJH01007	M	H	SI	S	1E	EMC	Y (2)	Y (5)	Y (6)
Temp Sens 1, JNG Pump Rm, SG2	30KLC52CT003	32UJH01009	M	H	SI	S	1E	EMC	Y (2)	Y (5)	Y (6)
Temp Sens 2, JNG Pump Rm, SG2	30KLC52CT004	32UJH01009	M	H	SI	S	1E	EMC	Y (2)	Y (5)	Y (6)
Temp Sens 1 Vlv Rm, SG2	30KLC52CT005	32UJH10002	M	H	SI	S	1E	EMC	Y (2)	Y (5)	Y (6)

Table 3.11-1—List of Environmentally Qualified Electrical/I&C Equipment (Sheet 107 of 130)

Name Tag (Equipment Description)	Tag Number	Local Area KKS ID (Room Location)	EQ Environment (Note 1)	Radiation Environment Zone (Note 2)	EQ Designated Function (Note 3)	Safety Class (Note 4)			EQ Program Designation (Note 5)		
Temp Sens 2 Vlv Rm, SG2	30KLC52CT006	32UJH10002	M	H	SI	S	1E	EMC	Y (2)	Y (5)	Y (6)
Temp Sens 1, JND Pump Rm, SG3	30KLC53CT001	33UJH01007	M	H	SI	S	1E	EMC	Y (2)	Y (5)	Y (6)
Temp Sens 2, JND Pump Rm, SG3	30KLC53CT002	33UJH01007	M	H	SI	S	1E	EMC	Y (2)	Y (5)	Y (6)
Temp Sens 1, JNG Pump Rm, SG3	30KLC53CT003	33UJH01009	M	H	SI	S	1E	EMC	Y (2)	Y (5)	Y (6)
Temp Sens 2, JNG Pump Rm, SG3	30KLC53CT004	33UJH01009	M	H	SI	S	1E	EMC	Y (2)	Y (5)	Y (6)
Temp Sens 1, Vlv Rm SG3	30KLC53CT005	33UJH10002	M	H	SI	S	1E	EMC	Y (2)	Y (5)	Y (6)
Temp Sens 2, Vlv Rm, SG3	30KLC53CT006	33UJH10002	M	H	SI	S	1E	EMC	Y (2)	Y (5)	Y (6)
Temp Meas 1, JND Pump Rm, Div 4	30KLC54CT001	34UJH01002	M	H	SI	S	1E	EMC	Y (2)	Y (5)	Y (6)
Temp Meas 2, JND Pump Rm, Div 4	30KLC54CT002	34UJH01002	M	H	SI	S	1E	EMC	Y (2)	Y (5)	Y (6)
Temp Meas 1, JNG Pump Rm, Div 4	30KLC54CT003	34UJH01006	M	H	SI	S	1E	EMC	Y (2)	Y (5)	Y (6)
Temp Meas 2, JNG Pump Rm, Div 4	30KLC54CT004	34UJH01006	M	H	SI	S	1E	EMC	Y (2)	Y (5)	Y (6)
Temp Sens 1, KAA Vlv Rm, SG4	30KLC54CT005	34UJH10004	M	H	SI	S	1E	EMC	Y (2)	Y (5)	Y (6)
Temp Sens 2, KAA Vlv Rm, SG4	30KLC54CT006	34UJH10004	M	H	SI	S	1E	EMC	Y (2)	Y (5)	Y (6)
Temp Sens 1, JMU Rm, SG4	30KLC54CT007	34UJH10010	M	H	SI	S	1E	EMC	Y (2)	Y (5)	Y (6)
Temp Sens 2, JMU Rm, SG4	30KLC54CT008	34UJH10010	M	H	SI	S	1E	EMC	Y (2)	Y (5)	Y (6)
Electrical Division of Safeguard Building Ventilation System (SBVSE)											
Actuator Supply Air Damper	30SAC01AA003	31UJK22026	M	M	SI	S	1E	EMC		Y (5)	Y (6)
Actuator Recirc Air Damper	30SAC01AA004	31UJK22028	M	M	SI	S	1E	EMC		Y (5)	Y (6)
Supply Air Heater	30SAC01AH002	31UJK22026	M	M	SI	S	1E	EMC		Y (5)	Y (6)
Fan Motor Heater	30SAC01AH501	31UJK22026	M	M	SI	S	1E	EMC		Y (5)	Y (6)
Supply Fan	30SAC01AN001	31UJK22026	M	M	SI	S	1E	EMC		Y (5)	Y (6)
Actuator Supply Air Damper	30SAC02AA003	32UJK34005	M	M	SI	S	1E	EMC		Y (5)	Y (6)
Actuator Recirc Air Damper	30SAC02AA004	32UJK31032	M	M	SI	S	1E	EMC		Y (5)	Y (6)
Supply Air Heater	30SAC02AH002	32UJK34008	M	M	SI	S	1E	EMC		Y (5)	Y (6)
Fan Motor Heater	30SAC02AH501	32UJK31007	M	M	SI	S	1E	EMC		Y (5)	Y (6)
Supply Air Fan	30SAC02AN001	32UJK31007	M	M	SI	S	1E	EMC		Y (5)	Y (6)
Actuator Supply Air Damper	30SAC03AA003	33UJK34005	M	M	SI	S	1E	EMC		Y (5)	Y (6)
Actuator Recirc Air Damper	30SAC03AA004	33UJK31032	M	M	SI	S	1E	EMC		Y (5)	Y (6)
Supply Air Heater	30SAC03AH002	33UJK31007	M	M	SI	S	1E	EMC		Y (5)	Y (6)
Fan Motor Heater	30SAC03AH501	33UJK31007	M	M	SI	S	1E	EMC		Y (5)	Y (6)
Supply Air Fan	30SAC03AN001	33UJK31007	M	M	SI	S	1E	EMC		Y (5)	Y (6)
Actuator Supply Air Damper	30SAC04AA003	34UJK22026	M	M	SI	S	1E	EMC		Y (5)	Y (6)
Actuator Recirc Air Damper	30SAC04AA004	34UJK22028	M	M	SI	S	1E	EMC		Y (5)	Y (6)

Table 3.11-1—List of Environmentally Qualified Electrical/I&C Equipment (Sheet 108 of 130)

Name Tag (Equipment Description)	Tag Number	Local Area KKS ID (Room Location)	EQ Environment (Note 1)	Radiation Environment Zone (Note 2)	EQ Designated Function (Note 3)	Safety Class (Note 4)			EQ Program Designation (Note 5)		
Supply Air Heater	30SAC04AH002	34UJK22026	M	M	SI	S	1E	EMC		Y (5)	Y (6)
Fan Motor Heater	30SAC04AH501	34UJK22026	M	M	SI	S	1E	EMC		Y (5)	Y (6)
Supply Fan	30SAC04AN001	34UJK22026	M	M	SI	S	1E	EMC		Y (5)	Y (6)
Battery Room Supply Air Heater	30SAC11AH001	31UJK18027	M	M	SI	S	1E	EMC		Y (5)	Y (6)
Battery Room Supply Air Heater	30SAC11AH002	31UJK14026	M	M	SI	S	1E	EMC		Y (5)	Y (6)
Supply Air Heater	30SAC11AH003	31UJK26021	M	M	SII	NS-AQ	1E	EMC			
Actuator Control Damper	30SAC12AA020	32UJK22004	M	M	SI	S	1E	EMC		Y (5)	Y (6)
Battery Room Supply Air Heater	30SAC12AH001	32UJK22028	M	M	SI	S	1E	EMC		Y (5)	Y (6)
Actuator Control Damper	30SAC13AA020	33UJK22030	M	M	SI	S	1E	EMC		Y (5)	Y (6)
Battery Room Supply Air Heater	30SAC13AH001	33UJK22028	M	M	SI	S	1E	EMC		Y (5)	Y (6)
Battery Room Supply Air Heater	30SAC14AH001	34UJK18027	M	M	SI	S	1E	EMC		Y (5)	Y (6)
Battery Room Supply Air Heater	30SAC14AH002	34UJK14026	M	M	SI	S	1E	EMC		Y (5)	Y (6)
Supply Air Heater	30SAC14AH003	30UFA01001	M	H	SI	S	1E	EMC	Y (2)	Y (5)	Y (6)
Supply Air Heater	30SAC15AH001	31UJH10024	M	H	SI	S	1E	EMC	Y (2)	Y (5)	Y (6)
Actuator Exhaust Air Div 3 Control Damper	30SAC22AA015	32UJK22020	M	M	SI	S	1E	EMC		Y (5)	Y (6)
Actuator Exhaust Air Equip Room Control	30SAC23AA015	33UJK22030	M	M	SI	S	1E	EMC		Y (5)	Y (6)
Actuator Exhaust Air Damper	30SAC31AA002	31UJK22024	M	M	SI	S	1E	EMC		Y (5)	Y (6)
Exhaust Fan Motor Heater	30SAC31AH501	31UJK22039	M	M	SI	S	1E	EMC		Y (5)	Y (6)
Exhaust Fan Motor	30SAC31AN001	31UJK22039	M	M	SI	S	1E	EMC		Y (5)	Y (6)
Actuator Exhaust Air Damper	30SAC32AA002	32UJK31032	M	M	SI	S	1E	EMC		Y (5)	Y (6)
Exhaust Fan Motor Heater	30SAC32AH501	32UJK31032	M	M	SI	S	1E	EMC		Y (5)	Y (6)
Exhaust Fan	30SAC32AN001	32UJK31032	M	M	SI	S	1E	EMC		Y (5)	Y (6)
Actuator Exhaust Air Damper	30SAC33AA002	33UJK31032	M	M	SI	S	1E	EMC		Y (5)	Y (6)
Exhaust Fan Motor Heater	30SAC33AH501	33UJK31032	M	M	SI	S	1E	EMC		Y (5)	Y (6)
Exhaust Fan	30SAC33AN001	33UJK31032	M	M	SI	S	1E	EMC		Y (5)	Y (6)
Actuator Exhaust Air Damper	30SAC34AA002	34UJK22024	M	M	SI	S	1E	EMC		Y (5)	Y (6)
Exhaust Fan Motor Heater	30SAC34AH501	34UJK22039	M	M	SI	S	1E	EMC		Y (5)	Y (6)
Exhaust Fan Motor	30SAC34AN001	34UJK22039	M	M	SI	S	1E	EMC		Y (5)	Y (6)
Actuator Exhaust Air Control Damper	30SAC42AA001	32UJK22028	M	M	SI	S	1E	EMC		Y (5)	Y (6)
Actuator Exhaust Air Control Damper	30SAC43AA001	33UJK22028	M	M	SI	S	1E	EMC		Y (5)	Y (6)
Actuator Battery Room Exhaust	30SAC51AA003	31UJK22030	M	M	SI	S	1E	EMC		Y (5)	Y (6)
Actuator Battery Room Exhaust-Maint	30SAC51AA006	31UJK22030	M	M	SI	S	1E	EMC		Y (5)	Y (6)
Battery Room Exhaust Fan Motor	30SAC51AN001	31UJK22030	M	M	SI	S	1E	EMC		Y (5)	Y (6)

Table 3.11-1—List of Environmentally Qualified Electrical/I&C Equipment (Sheet 109 of 130)

Name Tag (Equipment Description)	Tag Number	Local Area KKS ID (Room Location)	EQ Environment (Note 1)	Radiation Environment Zone (Note 2)	EQ Designated Function (Note 3)	Safety Class (Note 4)			EQ Program Designation (Note 5)		
Actuator Battery Room Exhaust	30SAC52AA003	32UJK31032	M	M	SI	S	1E	EMC		Y (5)	Y (6)
Actuator Battery Room Exhaust-Maint	30SAC52AA006	32UJK31032	M	M	SI	S	1E	EMC		Y (5)	Y (6)
Battery Room Exhaust Fan	30SAC52AN001	32UJK31032	M	M	SI	S	1E	EMC		Y (5)	Y (6)
Actuator Battery Room Exhaust	30SAC53AA003	33UJK31032	M	M	SI	S	1E	EMC		Y (5)	Y (6)
Actuator Battery Room Exhaust-Maint	30SAC53AA006	33UJK31032	M	M	SI	S	1E	EMC		Y (5)	Y (6)
Battery Room Exhaust Fan	30SAC53AN001	33UJK31032	M	M	SI	S	1E	EMC		Y (5)	Y (6)
Actuator Battery Room Exhaust	30SAC54AA003	34UJK22028	M	M	SI	S	1E	EMC		Y (5)	Y (6)
Actuator Battery Room Exhaust-Maint	30SAC54AA006	34UJK22028	M	M	SI	S	1E	EMC		Y (5)	Y (6)
Battery Room Exhaust Fan Motor	30SAC54AN001	34UJK22028	M	M	SI	S	1E	EMC		Y (5)	Y (6)
LAS Pump Room Recirc Fan Motor	30SAC61AN001	31UJH01024	M	H	SI	S	1E	EMC	Y (2)	Y (5)	Y (6)
KAA Pump Room Recirc Fan Motor	30SAC61AN002	31UJH01026	M	H	SI	S	1E	EMC	Y (2)	Y (5)	Y (6)
LAS Pump Room Recirc Fan	30SAC62AN001	32UJH01024	M	H	SI	S	1E	EMC	Y (2)	Y (5)	Y (6)
KAA Pump Room Recirc Fan	30SAC62AN002	32UJH01020	M	H	SI	S	1E	EMC	Y (2)	Y (5)	Y (6)
LAS Pump Room Recirc Fan	30SAC63AN001	33UJH01024	M	H	SI	S	1E	EMC	Y (2)	Y (5)	Y (6)
KAA Pump Room Recirc Fan	30SAC63AN002	33UJH01020	M	H	SI	S	1E	EMC	Y (2)	Y (5)	Y (6)
LAS Pump Room Recirc Fan Motor	30SAC64AN001	34UJH01024	M	H	SI	S	1E	EMC	Y (2)	Y (5)	Y (6)
KAA Pump Room Recirc Fan Motor	30SAC64AN002	34UJH01026	M	H	SI	S	1E	EMC	Y (2)	Y (5)	Y (6)
Position Indicator Inlet Control Damper	30SAC01CG003	31UJK22026	M	M	SI	S	1E	EMC		Y (5)	Y (6)
Position Indicator Recirc Control Damper	30SAC01CG004	31UJK22028	M	M	SI	S	1E	EMC		Y (5)	Y (6)
Filter Bank Diff Pressure Sensor	30SAC01CP001	31UJK22026	M	M	SI	S	1E	EMC		Y (5)	Y (6)
Pre Filter Diff Pressure Sensor	30SAC01CP501	31UJK22026	M	M	SI	S	1E	EMC		Y (5)	Y (6)
Filter Differential Pressure Sensor	30SAC01CP502	31UJK22026	M	M	SI	S	1E	EMC		Y (5)	Y (6)
Outside Air Temperature Sensor	30SAC01CT001	31UJK22026	M	M	SI	S	1E	EMC		Y (5)	Y (6)
Outside Air Temperature Sensor	30SAC01CT002	31UJK22026	M	M	SI	S	1E	EMC		Y (5)	Y (6)
Supply Air Temperature Sensor	30SAC01CT003	31UJK22026	M	M	SI	S	1E	EMC		Y (5)	Y (6)
Supply Air Temperature Sensor	30SAC01CT004	31UJK22026	M	M	SI	S	1E	EMC		Y (5)	Y (6)
Supply Air Temperature Sensor	30SAC01CT005	31UJK22026	M	M	SI	S	1E	EMC		Y (5)	Y (6)
Supply Air Temperature Sensor	30SAC01CT006	31UJK22026	M	M	SI	S	1E	EMC		Y (5)	Y (6)
Supply Air Temperature Sensor	30SAC01CT501	31UJK22026	M	M	SI	S	1E	EMC		Y (5)	Y (6)
Supply Air Temperature Sensor	30SAC01CT502	31UJK22026	M	M	SI	S	1E	EMC		Y (5)	Y (6)
Position Indicator Inlet Control Damper	30SAC03CG003	33UJK34005	M	M	SI	S	1E	EMC		Y (5)	Y (6)
Position Indicator Recirc Control Damper	30SAC03CG004	33UJK31018	M	M	SI	S	1E	EMC		Y (5)	Y (6)
Pre Filter Diff Pressure Sensor	30SAC03CP501	33UJK31018	M	M	SI	S	1E	EMC		Y (5)	Y (6)

Table 3.11-1—List of Environmentally Qualified Electrical/I&C Equipment (Sheet 110 of 130)

Name Tag (Equipment Description)	Tag Number	Local Area KKS ID (Room Location)	EQ Environment (Note 1)	Radiation Environment Zone (Note 2)	EQ Designated Function (Note 3)	Safety Class (Note 4)			EQ Program Designation (Note 5)		
Filter Differential Pressure Sensor	30SAC03CP502	33UJK31018	M	M	SI	S	1E	EMC		Y (5)	Y (6)
Outside Air Temperature Sensor	30SAC03CT001	33UJK38006	M	M	SI	S	1E	EMC		Y (5)	Y (6)
Outside Air Temperature Sensor	30SAC03CT002	33UJK38006	M	M	SI	S	1E	EMC		Y (5)	Y (6)
Supply Air Temperature Sensor	30SAC03CT003	33UJK34008	M	M	SI	S	1E	EMC		Y (5)	Y (6)
Supply Air Temperature Sensor	30SAC03CT004	33UJK34008	M	M	SI	S	1E	EMC		Y (5)	Y (6)
Supply Air Temperature Sensor	30SAC03CT005	33UJK34008	M	M	SI	S	1E	EMC		Y (5)	Y (6)
Supply Air Temperature Sensor	30SAC03CT006	33UJK31005	M	M	SI	S	1E	EMC		Y (5)	Y (6)
Supply Air Temperature Sensor	30SAC03CT501	33UJK34008	M	M	SI	S	1E	EMC		Y (5)	Y (6)
Supply Air Temperature Sensor	30SAC03CT502	33UJK34009	M	M	SI	S	1E	EMC		Y (5)	Y (6)
Position Indicator Inlet Control Damper	30SAC04CG003	34UJK22026	M	M	SI	S	1E	EMC		Y (5)	Y (6)
Position Indicator Recirc Control Damper	30SAC04CG004	34UJK22028	M	M	SI	S	1E	EMC		Y (5)	Y (6)
Filter Bank Diff Pressure Sensor	30SAC04CP001	34UJK22026	M	M	SI	S	1E	EMC		Y (5)	Y (6)
Pre Filter Diff Pressure Sensor	30SAC04CP501	34UJK22026	M	M	SI	S	1E	EMC		Y (5)	Y (6)
Filter Differential Pressure Sensor	30SAC04CP502	34UJK22026	M	M	SI	S	1E	EMC		Y (5)	Y (6)
Outside Air Temperature Sensor	30SAC04CT001	34UJK22026	M	M	SI	S	1E	EMC		Y (5)	Y (6)
Outside Air Temperature Sensor	30SAC04CT002	34UJK22026	M	M	SI	S	1E	EMC		Y (5)	Y (6)
Supply Air Temperature Sensor	30SAC04CT003	34UJK22026	M	M	SI	S	1E	EMC		Y (5)	Y (6)
Supply Air Temperature Sensor	30SAC04CT004	34UJK22026	M	M	SI	S	1E	EMC		Y (5)	Y (6)
Supply Air Temperature Sensor	30SAC04CT005	34UJK22026	M	M	SI	S	1E	EMC		Y (5)	Y (6)
Supply Air Temperature Sensor	30SAC04CT006	34UJK22026	M	M	SI	S	1E	EMC		Y (5)	Y (6)
Supply Air Temperature Sensor	30SAC04CT501	34UJK22026	M	M	SI	S	1E	EMC		Y (5)	Y (6)
Supply Air Temperature Sensor	30SAC04CT502	34UJK22026	M	M	SI	S	1E	EMC		Y (5)	Y (6)
Battery Room Supply Air Flow Sensor	30SAC11CF001	31UJK18027	M	M	SI	S	1E	EMC		Y (5)	Y (6)
Battery Rm Supply Air Flow Sensor	30SAC11CF002	31UJK14026	M	M	SI	S	1E	EMC		Y (5)	Y (6)
Supply Air Flow Sensor	30SAC11CF003	31UJK26026	M	M	SI	S	1E	EMC		Y (5)	Y (6)
Position Indicator Maint Supply Air	30SAC11CG003A	31UJK22024	M	M	SI	S	1E	EMC		Y (5)	Y (6)
Position Indicator Maint Supply Air	30SAC11CG003B	31UJK22024	M	M	SI	S	1E	EMC		Y (5)	Y (6)
Battery Room Supply Air Temp Sensor	30SAC11CT001	31UJK18027	M	M	SI	S	1E	EMC		Y (5)	Y (6)
Battery Rm Air Temperature Sensor	30SAC11CT002	31UJK18028	M	M	SI	S	1E	EMC		Y (5)	Y (6)
I&C Area Temperature Sensor	30SAC11CT003	31UJK18024	M	M	SI	S	1E	EMC		Y (5)	Y (6)
Battery Rm Supply Air Temperature Sensor	30SAC11CT004	31UJH01026	M	H	SI	S	1E	EMC	Y (2)	Y (5)	Y (6)
Battery Room Air Temperature Sensor	30SAC11CT005	31UJK14028	M	M	SI	S	1E	EMC		Y (5)	Y (6)
Switchgear Rm Air Temp Sensor	30SAC11CT006	31UJK18026	M	M	SI	S	1E	EMC		Y (5)	Y (6)

Table 3.11-1—List of Environmentally Qualified Electrical/I&C Equipment (Sheet 111 of 130)

Name Tag (Equipment Description)	Tag Number	Local Area KKS ID (Room Location)	EQ Environment (Note 1)	Radiation Environment Zone (Note 2)	EQ Designated Function (Note 3)	Safety Class (Note 4)	EQ Program Designation (Note 5)
Supply Air Heater Temperature Sen	30SAC11CT008	31UJK26024	M	M	SI	S 1E EMC	Y (5) Y (6)
Rm Air Temperature Sensor	30SAC11CT009	31UJK26026	M	M	SI	S 1E EMC	Y (5) Y (6)
Switchgear Rm Air Temp Sensor	30SAC13CT006	33UJK18020	M	M	SI	S 1E EMC	Y (5) Y (6)
Battery Room Supply Air Flow Sensor	30SAC12CF001	32UJK22028	M	M	SI	S 1E EMC	Y (5) Y (6)
Position Indicator Maint Supply Air	30SAC12CG005A	32UJK31041	M	M	SI	S 1E EMC	Y (5) Y (6)
Position Indicator Maint Supply Air	30SAC12CG005B	32UJK31041	M	M	SI	S 1E EMC	Y (5) Y (6)
Battery Room Supply Air Temp Sensor	30SAC12CT001	32UJK22028	M	M	SI	S 1E EMC	Y (5) Y (6)
Battery Rm Air Temperature Sensor	30SAC12CT002	32UJK22028	M	M	SI	S 1E EMC	Y (5) Y (6)
I&C Area Temperature Sensor	30SAC12CT003	32UJK18004	M	M	SI	S 1E EMC	Y (5) Y (6)
Switchgear Rm Air Temp Sensor	30SAC12CT006	32UJK18020	M	M	SI	S 1E EMC	Y (5) Y (6)
Switchgear Rm Air Temp Sensor	30SAC12CT007	32UJK22029	M	M	SI	S 1E EMC	Y (5) Y (6)
Battery Room Supply Air Flow Sensor	30SAC13CF001	33UJK22028	M	M	SI	S 1E EMC	Y (5) Y (6)
Position Indicator Maint Supply Air	30SAC13CG005A	33UJK31041	M	M	SI	S 1E EMC	Y (5) Y (6)
Position Indicator Maint Supply Air	30SAC13CG005B	33UJK31041	M	M	SI	S 1E EMC	Y (5) Y (6)
Battery Room Supply Air Temp Sensor	30SAC13CT001	33UJK22028	M	M	SI	S 1E EMC	Y (5) Y (6)
Battery Rm Air Temperature Sensor	30SAC13CT002	33UJK22028	M	M	SI	S 1E EMC	Y (5) Y (6)
I&C Area Temperature Sensor	30SAC13CT003	33UJK18004	M	M	SI	S 1E EMC	Y (5) Y (6)
Switchgear Rm Air Temp Sensor	30SAC13CT007	33UJK22029	M	M	SI	S 1E EMC	Y (5) Y (6)
Battery Room Supply Air Flow Sensor	30SAC14CF001	34UJK18027	M	M	SI	S 1E EMC	Y (5) Y (6)
Battery Rm Supply Air Flow Sensor	30SAC14CF002	34UJK14026	M	M	SI	S 1E EMC	Y (5) Y (6)
Supply Air Flow Sensor	30SAC14CF003	34UJK26026	M	M	SI	S 1E EMC	Y (5) Y (6)
Position Indicator Maint Supply Air	30SAC14CG003A	34UJK22024	M	M	SI	S 1E EMC	Y (5) Y (6)
Position Indicator Maint Supply Air	30SAC14CG003B	34UJK22024	M	M	SI	S 1E EMC	Y (5) Y (6)
Battery Room Supply Air Temp Sensor	30SAC14CT001	34UJK18027	M	M	SI	S 1E EMC	Y (5) Y (6)
Battery Rm Air Temperature Sensor	30SAC14CT002	34UJK18028	M	M	SI	S 1E EMC	Y (5) Y (6)
I&C Area Temperature Sensor	30SAC14CT003	34UJK18024	M	M	SI	S 1E EMC	Y (5) Y (6)
Battery Rm Supply Air Temperature Sensor	30SAC14CT004	34UJH01026	M	H	SI	S 1E EMC	Y (2) Y (5) Y (6)
Battery Room Air Temperature Sensor	30SAC14CT005	34UJK14028	M	M	SI	S 1E EMC	Y (5) Y (6)
Switchgear Rm Air Temp Sensor	30SAC14CT006	34UJK18026	M	M	SI	S 1E EMC	Y (5) Y (6)
Supply Air Heater Temperature Sen	30SAC14CT008	34UJK26024	M	M	SI	S 1E EMC	Y (5) Y (6)
Rm Air Temperature Sensor	30SAC14CT009	34UJK26026	M	M	SI	S 1E EMC	Y (5) Y (6)
Supply Air Flow Sensor	30SAC15CF001	31UJH10024	M	H	SI	S 1E EMC	Y (2) Y (5) Y (6)
Supply Air Heater Temperature Sen	30SAC15CT001	31UJH10024	M	H	SI	S 1E EMC	Y (2) Y (5) Y (6)

Table 3.11-1—List of Environmentally Qualified Electrical/I&C Equipment (Sheet 112 of 130)

Name Tag (Equipment Description)	Tag Number	Local Area KKS ID (Room Location)	EQ Environment (Note 1)	Radiation Environment Zone (Note 2)	EQ Designated Function (Note 3)	Safety Class (Note 4)			EQ Program Designation (Note 5)		
Rm Air Temperature Sensor	30SAC15CT002	31UJH10024	M	H	SI	S	1E	EMC	Y (2)	Y (5)	Y (6)
Supply Air Flow Sensor	30SAC18CF001	34UJH10024	M	H	SI	S	1E	EMC	Y (2)	Y (5)	Y (6)
Supply Air Heater Temperature Sen	30SAC18CT001	34UJH10024	M	H	SI	S	1E	EMC	Y (2)	Y (5)	Y (6)
Rm Air Temperature Sensor	30SAC18CT002	34UJH10024	M	H	SI	S	1E	EMC	Y (2)	Y (5)	Y (6)
Switchgear Exhaust Air Temp Sensor	30SAC21CT001	31UJK18025	M	M	SI	S	1E	EMC		Y (5)	Y (6)
Switchgear Exhaust Air Temp Sensor	30SAC21CT002	31UJK18028	M	M	SI	S	1E	EMC		Y (5)	Y (6)
Position Indicator Maint Exhaust Air	30SAC22CG001A	32UJK31032	M	M	SI	S	1E	EMC		Y (5)	Y (6)
Position Indicator Maint Exhaust Air	30SAC22CG001B	32UJK31032	M	M	SI	S	1E	EMC		Y (5)	Y (6)
Switchgear Exhaust Air Temp Sensor	30SAC22CT001	32UJK18020	M	M	SI	S	1E	EMC		Y (5)	Y (6)
Switchgear Exhaust Air Temp Sensor	30SAC22CT002	32UJK18002	M	M	SI	S	1E	EMC		Y (5)	Y (6)
Position Indicator Maint Exhaust Air	30SAC23CG001A	33UJK31032	M	M	SI	S	1E	EMC		Y (5)	Y (6)
Position Indicator Maint Exhaust Air	30SAC23CG001B	33UJK31032	M	M	SI	S	1E	EMC		Y (5)	Y (6)
Switchgear Exhaust Air Temp Sensor	30SAC23CT001	33UJK18020	M	M	SI	S	1E	EMC		Y (5)	Y (6)
Switchgear Exhaust Air Temp Sensor	30SAC23CT002	33UJK18002	M	M	SI	S	1E	EMC		Y (5)	Y (6)
Switchgear Exhaust Air Temp Sensor	30SAC24CT001	34UJK18025	M	M	SI	S	1E	EMC		Y (5)	Y (6)
Switchgear Exhaust Air Temp Sensor	30SAC24CT002	34UJK18028	M	M	SI	S	1E	EMC		Y (5)	Y (6)
Position Indicator Exh Control Damper	30SAC31CG002	31UJK22039	M	M	SI	S	1E	EMC		Y (5)	Y (6)
Position Indicator Exh Control Damper	30SAC32CG002	32UJK31032	M	M	SI	S	1E	EMC		Y (5)	Y (6)
Position Indicator Exh Control Damper	30SAC33CG002	33UJK31032	M	M	SI	S	1E	EMC		Y (5)	Y (6)
Position Indicator Exh Control Damper	30SAC34CG002	34UJK22039	M	M	SI	S	1E	EMC		Y (5)	Y (6)
Battery Room Exhaust Flow Sensor	30SAC41CF001	31UJK18024	M	M	SI	S	1E	EMC		Y (5)	Y (6)
Battery Room Exhaust Flow Sensor	30SAC42CF001	32UJK22028	M	M	SI	S	1E	EMC		Y (5)	Y (6)
Battery Room Exhaust Flow Sensor	30SAC43CF001	33UJK22028	M	M	SI	S	1E	EMC		Y (5)	Y (6)
Battery Room Exhaust Flow Sensor	30SAC44CF001	34UJK18024	M	M	SI	S	1E	EMC		Y (5)	Y (6)
LAS Pump Room Temperature Sensor	30SAC61CT001	31UJH01024	M	H	SI	S	1E	EMC	Y (2)	Y (5)	Y (6)
LAS Pump Room Temperature Sensor	30SAC61CT002	31UJH01024	M	H	SI	S	1E	EMC	Y (2)	Y (5)	Y (6)
KAA Pump Room Temperature Sensor	30SAC61CT003	31UJH01026	M	H	SI	S	1E	EMC	Y (2)	Y (5)	Y (6)
KAA Pump Room Temperature Sensor	30SAC61CT004	31UJH01026	M	H	SI	S	1E	EMC	Y (2)	Y (5)	Y (6)
LAS Pump Room Temperature Sensor	30SAC62CT001	32UJH01024	M	H	SI	S	1E	EMC	Y (2)	Y (5)	Y (6)
LAS Pump Room Temperature Sensor	30SAC62CT002	32UJH01024	M	H	SI	S	1E	EMC	Y (2)	Y (5)	Y (6)
KAA Pump Room Temperature Sensor	30SAC62CT003	32UJH01020	M	H	SI	S	1E	EMC	Y (2)	Y (5)	Y (6)
KAA Pump Room Temperature Sensor	30SAC62CT004	32UJH01020	M	H	SI	S	1E	EMC	Y (2)	Y (5)	Y (6)
LAS Pump Room Temperature Sensor	30SAC63CT001	33UJH01024	M	H	SI	S	1E	EMC	Y (2)	Y (5)	Y (6)

Table 3.11-1—List of Environmentally Qualified Electrical/I&C Equipment (Sheet 113 of 130)

Name Tag (Equipment Description)	Tag Number	Local Area KKS ID (Room Location)	EQ Environment (Note 1)	Radiation Environment Zone (Note 2)	EQ Designated Function (Note 3)	Safety Class (Note 4)			EQ Program Designation (Note 5)		
LAS Pump Room Temperature Sensor	30SAC63CT002	33UJH01024	M	H	SI	S	1E	EMC	Y (2)	Y (5)	Y (6)
KAA Pump Room Temperature Sensor	30SAC63CT003	33UJH01020	M	H	SI	S	1E	EMC	Y (2)	Y (5)	Y (6)
KAA Pump Room Temperature Sensor	30SAC63CT004	33UJH01020	M	H	SI	S	1E	EMC	Y (2)	Y (5)	Y (6)
LAS Pump Room Temperature Sensor	30SAC64CT001	34UJH01024	M	H	SI	S	1E	EMC	Y (2)	Y (5)	Y (6)
LAS Pump Room Temperature Sensor	30SAC64CT002	34UJH01024	M	H	SI	S	1E	EMC	Y (2)	Y (5)	Y (6)
KAA Pump Room Temperature Sensor	30SAC64CT003	34UJH01026	M	H	SI	S	1E	EMC	Y (2)	Y (5)	Y (6)
KAA Pump Room Temperature Sensor	30SAC64CT004	34UJH01026	M	H	SI	S	1E	EMC	Y (2)	Y (5)	Y (6)
Fuel Building Ventilation System (FBVS)											
Supp Iso Dmpr Equip Hatch	30KLL11AA001	30UFA29090	M	H	SI	S	1E	EMC	Y (2)	Y (5)	Y (6)
Sup Iso Dmpr, Fuel Hdlg Hall Div 1	30KLL11AA002	30UFA29045	M	H	SI	S	1E	EMC	Y (2)	Y (5)	Y (6)
Sup Iso Dmpr, Emer Airlock Div 1	30KLL11AA003	30UFA29005	M	H	SI	S	1E	EMC	Y (2)	Y (5)	Y (6)
Sup Iso/Cntr Dmpr, Fuel Pool Flr	30KLL11AA010	30UFA29015	M	H	SII	NS-AQ		EMC	Y (2)	Y (5)	Y (6)
Sup Iso Dmpr, Equip Hatch Div 4	30KLL14AA001	30UFA29090	M	H	SI	S	1E	EMC	Y (2)	Y (5)	Y (6)
Sup Iso Dmpr, Fuel Hdlg Hall Div 4	30KLL14AA002	30UFA29015	M	H	SI	S	1E	EMC	Y (2)	Y (5)	Y (6)
Sup Iso Dmpr, Emer Airlock Div 4	30KLL14AA003	30UFA29004	M	H	SI	S	1E	EMC	Y (2)	Y (5)	Y (6)
Exh Iso Dmpr, Equip Hatch	30KLL21AA001	30UFA29090	M	H	SI	S	1E	EMC	Y (2)	Y (5)	Y (6)
Exh Iso Dmpr, Fuel Pool Flr to KLC	30KLL21AA002	30UFA29015	M	H	SI	S	1E	EMC	Y (2)	Y (5)	Y (6)
Exh Iso Dmpr, Emer Airlock	30KLL21AA003	30UFA29005	M	H	SI	S	1E	EMC	Y (2)	Y (5)	Y (6)
Exh Iso Dmpr (KLL - Cell 4 to KLE)	30KLL21AA004	30UFA29015	M	H	SI	S	1E	EMC	Y (2)	Y (5)	Y (6)
Exh Iso Dmpr, Equip Hatch Div 4	30KLL24AA001	30UFA29090	M	H	SI	S	1E	EMC	Y (2)	Y (5)	Y (6)
Exh Iso Dmpr, Fuel Hdlg Hall Div 4	30KLL24AA002	30UFA29045	M	H	SI	S	1E	EMC	Y (2)	Y (5)	Y (6)
Exh Iso Dmpr, Emer Airlock	30KLL24AA003	30UFA29004	M	H	SI	S	1E	EMC	Y (2)	Y (5)	Y (6)
Exh Iso Dmpr (KLL - Cell 4 to KLE)	30KLL24AA004	30UFA29015	M	H	SI	S	1E	EMC	Y (2)	Y (5)	Y (6)
Sup Iso/Cntr Dmpr (KLE to KLL - Cell 5)	30KLL31AA049	30UFA24045	M	H	SI	S	1E	EMC	Y (2)	Y (5)	Y (6)
Sup Iso Dmpr (KLE to KLL - Cell 4)	30KLL31AA090	30UFA24095	M	H	SI	S	1E	EMC	Y (2)	Y (5)	Y (6)
Sup Iso/Cntr Dmpr (KLE to KLL - Cell 4)	30KLL34AA065	30UFA24095	M	H	SI	S	1E	EMC	Y (2)	Y (5)	Y (6)
Sup Iso Dmpr (KLE to KLL - Cell 5)	30KLL34AA090	30UFA24045	M	H	SI	S	1E	EMC	Y (2)	Y (5)	Y (6)
Exh Iso Dmpr (KLL - Cell 4 to KLE)	30KLL41AA100	30UFA29054	M	H	SI	S	1E	EMC	Y (2)	Y (5)	Y (6)
Exh Iso Dmpr (KLL - Cell 5 to KLE)	30KLL41AA101	30UFA24056	M	H	SI	S	1E	EMC	Y (2)	Y (5)	Y (6)
Exh Iso Dmpr (KLL - Cell 4 to KLE)	30KLL44AA100	30UFA29054	M	H	SI	S	1E	EMC	Y (2)	Y (5)	Y (6)
Exh Iso Dmpr (KLL - Cell 5 to KLE)	30KLL44AA101	30UFA24056	M	H	SI	S	1E	EMC	Y (2)	Y (5)	Y (6)
Air Heater, EBS Pump Room	30KLL61AH001	30UFA01038	M	H	SI	S	1E	EMC	Y (2)	Y (5)	Y (6)
Air Heater, EBS Pump Room	30KLL61AH002	30UFA01038	M	H	SI	S	1E	EMC	Y (2)	Y (5)	Y (6)

Table 3.11-1—List of Environmentally Qualified Electrical/I&C Equipment (Sheet 114 of 130)

Name Tag (Equipment Description)	Tag Number	Local Area KKS ID (Room Location)	EQ Environment (Note 1)	Radiation Environment Zone (Note 2)	EQ Designated Function (Note 3)	Safety Class (Note 4)			EQ Program Designation (Note 5)		
Air Heater, EBS Pipe Chase	30KLL61AH003	30UFA06039	M	H	SI	S	1E	EMC	Y (2)	Y (5)	Y (6)
Air Heater, EBS Pipe Chase	30KLL61AH004	30UFA06039	M	H	SI	S	1E	EMC	Y (2)	Y (5)	Y (6)
Air Heater, Loading Hall Duct	30KLL61AH010	30UFA10015	M	H	SII	NS-AQ		EMC	Y (2)	Y (5)	Y (6)
Air Heater, Pipe Pene Duct	30KLL61AH011	30UFA15045	M	H	SII	NS-AQ		EMC	Y (2)	Y (5)	Y (6)
Recirc Fan, Ex Borating Pump RM	30KLL61AN001	30UFA01038	M	H	SI	S	1E	EMC	Y (2)	Y (5)	Y (6)
Recirc Fan, FP Cooling Pump RM	30KLL61AN002	30UFA01026	M	H	SI	S	1E	EMC	Y (2)	Y (5)	Y (6)
Recirc Fan, FP Cooling Pump RM	30KLL61AN003	30UFA05082	M	H	SI	S	1E	EMC	Y (2)	Y (5)	Y (6)
Air Heater, EBS Pump Room	30KLL64AH001	30UFA01088	M	H	SI	S	1E	EMC	Y (2)	Y (5)	Y (6)
Air Heater, EBS Pump Room	30KLL64AH002	30UFA01088	M	H	SI	S	1E	EMC	Y (2)	Y (5)	Y (6)
Air Heater, EBS Pipe Chase	30KLL64AH003	30UFA06087	M	H	SI	S	1E	EMC	Y (2)	Y (5)	Y (6)
Air Heater, EBS Pipe Chase	30KLL64AH004	30UFA06087	M	H	SI	S	1E	EMC	Y (2)	Y (5)	Y (6)
Air Heater, Corridor Duct	30KLL64AH012	30UFA06057	M	H	SII	NS-AQ		EMC	Y (2)	Y (5)	Y (6)
Air Heater, Corridor Duct	30KLL64AH013	30UFA06056	M	H	SII	NS-AQ		EMC	Y (2)	Y (5)	Y (6)
Air Heater, Corridor Duct	30KLL64AH014	30UFA24056	M	H	SII	NS-AQ		EMC	Y (2)	Y (5)	Y (6)
Recirc Fan, Ex Borating Pump RM	30KLL64AN001	30UFA01088	M	H	SI	S	1E	EMC	Y (2)	Y (5)	Y (6)
Recirc Fan, FP Cooling Pump RM	30KLL64AN002	30UFA01076	M	H	SI	S	1E	EMC	Y (2)	Y (5)	Y (6)
Recirc Fan, FP Cooling Pump RM	30KLL64AN003	30UFA01077	M	H	SI	S	1E	EMC	Y (2)	Y (5)	Y (6)
Emer Pushbutton FP	30KLL10EY001	30UFA29015	M	H	SI	S	1E	EMC	Y (2)	Y (5)	Y (6)
Emer Pushbutton FP	30KLL10EY002	30UFA29015	M	H	SI	S	1E	EMC	Y (2)	Y (5)	Y (6)
Temp Room UFA01038	30KLL61CT001	30UFA01038	M	H	SI	S	1E	EMC	Y (2)	Y (5)	Y (6)
Temp Room UFA01038	30KLL61CT002	30UFA01038	M	H	SI	S	1E	EMC	Y (2)	Y (5)	Y (6)
Temp Room UFA06039	30KLL61CT003	30UFA06039	M	H	SI	S	1E	EMC	Y (2)	Y (5)	Y (6)
Temp Room UFA06039	30KLL61CT004	30UFA06039	M	H	SI	S	1E	EMC	Y (2)	Y (5)	Y (6)
Temp Room UFA10015	30KLL61CT010	30UFA10015	M	H	SII	NS-AQ		EMC	Y (2)	Y (5)	Y (6)
Temp Room UFA21045	30KLL61CT011	30UFA21045	M	H	SI	S	1E	EMC	Y (2)	Y (5)	Y (6)
Temp Room UFA29015	30KLL61CT020	30UFA29015	M	H	SI	S	1E	EMC	Y (2)	Y (5)	Y (6)
Temp Room UFA01026	30KLL61CT102	30UFA01026	M	H	SI	S	1E	EMC	Y (2)	Y (5)	Y (6)
Temp Room UFA05082	30KLL61CT103	30UFA05082	M	H	SI	S	1E	EMC	Y (2)	Y (5)	Y (6)
Temp Room UFA10015	30KLL61CT110	30UFA10015	M	H	SII	NS-AQ		EMC	Y (2)	Y (5)	Y (6)
Temp Room UFA15045	30KLL61CT11	30UFA15045	M	H	SII	NS-AQ		EMC	Y (2)	Y (5)	Y (6)
Temp Room UFA29015	30KLL61CT140	30UFA29015	M	H	SI	S	1E	EMC	Y (2)	Y (5)	Y (6)
TEmp Room UFA01088	30KLL64CT001	30UFA01088	M	H	SI	S	1E	EMC	Y (2)	Y (5)	Y (6)
Temp Room UFA01088	30KLL64CT002	30UFA01088	M	H	SI	S	1E	EMC	Y (2)	Y (5)	Y (6)

Table 3.11-1—List of Environmentally Qualified Electrical/I&C Equipment (Sheet 115 of 130)

Name Tag (Equipment Description)	Tag Number	Local Area KKS ID (Room Location)	EQ Environment (Note 1)	Radiation Environment Zone (Note 2)	EQ Designated Function (Note 3)	Safety Class (Note 4)			EQ Program Designation (Note 5)		
Temp Room UFA06087	30KLL64CT003	30UFA06087	M	H	SI	S	1E	EMC	Y (2)	Y (5)	Y (6)
Temp Room UFA06087	30KLL64CT004	30UFA06087	M	H	SI	S	1E	EMC	Y (2)	Y (5)	Y (6)
Temp Room UFA24072	30KLL64CT010	30UFA24072	M	H	SI	S	1E	EMC	Y (2)	Y (5)	Y (6)
Temp Room UFA05076	30KLL64CT011	30UFA05076	M	H	SI	S	1E	EMC	Y (2)	Y (5)	Y (6)
Temp Room UFA06056	30KLL64CT012	30UFA06056	M	H	SII	NS-AQ		EMC	Y (2)	Y (5)	Y (6)
Temp Room UFA06056	30KLL64CT013	30UFA06056	M	H	SII	NS-AQ		EMC	Y (2)	Y (5)	Y (6)
Temp Room UFA10071	30KLL64CT014	30UFA10071	M	H	SI	S	1E	EMC	Y (2)	Y (5)	Y (6)
Temp Room UFA13070	30KLL64CT015	30UFA13070	M	H	SI	S	1E	EMC	Y (2)	Y (5)	Y (6)
Temp Room UFA24070	30KLL64CT016	30UFA24070	M	H	SI	S	1E	EMC	Y (2)	Y (5)	Y (6)
Temp Room UFA24056	30KLL64CT017	30UFA24056	M	H	SI	NS-AQ		EMC	Y (2)	Y (5)	Y (6)
Temp Room UFA13025	30KLL64CT024	30UFA13025	M	H	SI	S	1E	EMC	Y (2)	Y (5)	Y (6)
Temp Room UFA01088	30KLL64CT101	30UFA01088	M	H	SI	S	1E	EMC	Y (2)	Y (5)	Y (6)
Temp Room UFA01076	30KLL64CT102	30UFA01076	M	H	SI	S	1E	EMC	Y (2)	Y (5)	Y (6)
Temp Room UFA01077	30KLL64CT103	30UFA01077	M	H	SI	S	1E	EMC	Y (2)	Y (5)	Y (6)
Temp Room UFA06087	30KLL64CT104	30UFA06087	M	H	SI	S	1E	EMC	Y (2)	Y (5)	Y (6)
1 Temp Room UFA10070	30KLL64CT106	30UFA10070	M	H	SI	S	1E	EMC	Y (2)	Y (5)	Y (6)
Temp Room UFA17025	30KLL64CT130	30UFA17025	M	H	SI	S	1E	EMC	Y (2)	Y (5)	Y (6)
Temp Room UFA17057	30KLL64CT132	30UFA17057	M	H	SI	S	1E	EMC	Y (2)	Y (5)	Y (6)
Main Control Room Air Conditioning System (CRACS)											
Inlet Isolation Damper - Div 1	30SAB01AA002	32UJK31034	M	M	SI	S	1E	EMC		Y (5)	Y (6)
Makeup Air Isolation Damper - Div 1	30SAB01AA003	32UJK31034	M	M	SI	S	1E	EMC		Y (5)	Y (6)
Recirc. Air Vol Control Damper - Div 1	30SAB01AA012	32UJK31034	M	M	SI	S	1E	EMC		Y (5)	Y (6)
Makeup Air Heater - Div 1	30SAB01AH001	32UJK31034	M	M	SI	S	1E	EMC		Y (5)	Y (6)
Makeup Air Isolation Damper - Div 4	30SAB04AA003	33UJK31034	M	M	SI	S	1E	EMC		Y (5)	Y (6)
Recirc. Air Volume Control Damper - Div	30SAB04AA012	33UJK31034	M	M	SI	S	1E	EMC		Y (5)	Y (6)
Makeup Air Heater - Div 4	30SAB04AH001	32UJK31034	M	M	SI	S	1E	EMC		Y (5)	Y (6)
Iodine Filtr. Inlet Isol. Damper - Div 1	30SAB11AA001	32UJK31034	M	M	SI	S	1E	EMC		Y (5)	Y (6)
SAB11 Recirc Back-draft Damper	30SAB11AA002	32UJK31034	M	M	SII	NS-AQ				Y (5)	Y (6)
SAB11 Filtr Train Iso Dmpr Dwnstrm	30SAB11AA003	32UJK31034	M	M	SI	S	1E	EMC		Y (5)	Y (6)
SAB11 Filtr Train Recirc Iso Dmpr	30SAB11AA004	32UJK31034	M	M	SI	S	1E	EMC		Y (5)	Y (6)
SAB11 Filtration Trn Electric Preheater	30SAB11AH001	32UJK31034	M	M	SI	S	1E	EMC		Y (5)	Y (6)
Iodine Filtr. Inlet Iso. Damper - Div 4	30SAB14AA001	33UJK31034	M	M	SI	S	1E	EMC		Y (5)	Y (6)
SAB14 Filtr Train Iso Dmpr Dwnstrm	30SAB14AA003	33UJK31034	M	M	SI	S	1E	EMC		Y (5)	Y (6)

Table 3.11-1—List of Environmentally Qualified Electrical/I&C Equipment (Sheet 116 of 130)

Name Tag (Equipment Description)	Tag Number	Local Area KKS ID (Room Location)	EQ Environment (Note 1)	Radiation Environment Zone (Note 2)	EQ Designated Function (Note 3)	Safety Class (Note 4)	EQ Program Designation (Note 5)
SAB14 Filtr Train Recirc Iso Dmpr	30SAB14AA004	33UJK31034	M	M	SI	S 1E EMC	Y (5) Y (6)
SAB14 Recirc Backdraft Damper	30SAB14AA005	32UJK31034	M	M	SII	NS-AQ	Y (5) Y (6)
SAB14 Filtration Trn Electric Preheater	30SAB14AH001	32UJK31034	M	M	SI	S 1E EMC	Y (5) Y (6)
Exhaust Air Recirc. Vol Contr Damper A	30SAB42AA001	32UJK26031	M	M	SI	S 1E EMC	Y (5) Y (6)
Exhaust Air Isolation Damper - A	30SAB45AA003	32UJK31020	M	M	SI	S 1E EMC	Y (5) Y (6)
Exhaust Air Isolation Damper - B	30SAB45AA004	32UJK31020	M	M	SI	S 1E EMC	Y (5) Y (6)
Recirc. Vol. Cont. Posit. Indic. - Div 1	30SAB01CG012	32UJK31034	M	M	SI	S 1E EMC	Y (5) Y (6)
Recirc. HEPA DP - Div 1	30SAB01CP002	32UJK31034	M	M	SI	S 1E EMC	Y (5) Y (6)
Makeup Air Pre-Filter DP - Div 1	30SAB01CP501	32UJK31034	M	M	SI	S 1E EMC	Y (5) Y (6)
Recirc. HEPA DP (Local) - Div 1	30SAB01CP504	32UJK31034	M	M	SI	S 1E EMC	Y (5) Y (6)
Makeup Air Inlet Temp - Div 1	30SAB01CT001	32UJK31034	M	M	SI	S 1E EMC	Y (5) Y (6)
Makeup Air Heater Outlet Temp - Div 1 A	30SAB01CT002	32UJK31034	M	M	SI	S 1E EMC	Y (5) Y (6)
Makeup Air Heater Outlet Temp - Div 1 B	30SAB01CT003	32UJK31034	M	M	SI	S 1E EMC	Y (5) Y (6)
Makeup Air Heater Outlet Temp - Div 1 C	30SAB01CT004	32UJK31034	M	M	SI	S 1E EMC	Y (5) Y (6)
Recirc. CoolCoil Inlet Temp (Local) -Div 1	30SAB01CT501	32UJK31034	M	M	SI	S 1E EMC	Y (5) Y (6)
Recirc. CoolCoil Exit Temp (Local) -Div 1	30SAB01CT502	32UJK31034	M	M	SI	S 1E EMC	Y (5) Y (6)
Smoke Detector	30SAB01SD001	32UJK31034	M	M	SII	NS-AQ	Y (5) Y (6)
Toxic Gas Sensor	30SAB01TG001	32UJK31034	M	M	SI	S 1E EMC	Y (5) Y (6)
Recirc. HEPA DP - Div 2	30SAB02CP002	32UJK31035	M	M	SI	S 1E EMC	Y (5) Y (6)
Recirc. HEPA DP (Local) - Div 2	30SAB02CP504	32UJK31035	M	M	SI	S 1E EMC	Y (5) Y (6)
Recirc. CoolCoil Inlet Temp (Local) -Div 2	30SAB02CT501	32UJK31035	M	M	SI	S 1E EMC	Y (5) Y (6)
Recirc. CCoil Outlet Temp (Local) - Div 2	30SAB02CT502	32UJK31035	M	M	SI	S 1E EMC	Y (5) Y (6)
Recirc. HEPA DP - Div 3	30SAB03CP002	33UJK31034	M	M	SI	S 1E EMC	Y (5) Y (6)
Recirc. HEPA DP (Local) - Div 3	30SAB03CP504	33UJK31034	M	M	SI	S 1E EMC	Y (5) Y (6)
Recirc CoolCoil Inlet Temp (Local) -Div 3	30SAB03CT501	33UJK31034	M	M	SI	S 1E EMC	Y (5) Y (6)
Recirc. Cool Coil Exit Temp (Local) -Div 3	30SAB03CT502	33UJK31034	M	M	SI	S 1E EMC	Y (5) Y (6)
Recirc Vol Cont Damp Position Indic-Div 4	30SAB04CG012	33UJK31035	M	M	SI	S 1E EMC	Y (5) Y (6)
Recirc. HEPA DP - Div 4	30SAB04CP002	33UJK31035	M	M	SI	S 1E EMC	Y (5) Y (6)
Makeup Air Pre-Filter DP - Div 4	30SAB04CP501	33UJK31035	M	M	SI	S 1E EMC	Y (5) Y (6)
Recirc. HEPA DP (Local) - Div 4	30SAB04CP504	33UJK31035	M	M	SI	S 1E EMC	Y (5) Y (6)
Makeup Air Inlet Temp - Div 4	30SAB04CT001	33UJK31035	M	M	SI	S 1E EMC	Y (5) Y (6)
Makeup Air Heater Outlet Temp - Div 4 A	30SAB04CT002	33UJK31035	M	M	SI	S 1E EMC	Y (5) Y (6)
Makeup Air Heater Outlet Temp - Div 4 B	30SAB04CT003	33UJK31035	M	M	SI	S 1E EMC	Y (5) Y (6)

Table 3.11-1—List of Environmentally Qualified Electrical/I&C Equipment (Sheet 117 of 130)

Name Tag (Equipment Description)	Tag Number	Local Area KKS ID (Room Location)	EQ Environment (Note 1)	Radiation Environment Zone (Note 2)	EQ Designated Function (Note 3)	Safety Class (Note 4)	EQ Program Designation (Note 5)
Makeup Air Heater Outlet Temp - Div 4 C	30SAB04CT004	33UJK31035	M	M	SI	S 1E EMC	Y (5) Y (6)
Recirc CoolCoil Inlet Temp (Local) - Div 4	30SAB04CT501	33UJK31035	M	M	SI	S 1E EMC	Y (5) Y (6)
Recirc. CoolCoil Exit Temp (Local) - Div 4	30SAB04CT502	33UJK31035	M	M	SI	S 1E EMC	Y (5) Y (6)
Smoke Detector	30SAB04SD001	32UJK31034	M	M	SII	NS-AQ	Y (5)
Toxic Gas Sensor	30SAB04TG001	32UJK31034	M	M	SI	S 1E EMC	Y (5) Y (6)
Iodine Filtr. Filter DP - Div 1	30SAB11CP001	32UJK31034	M	M	SI	S 1E EMC	Y (5) Y (6)
Iodine Filtration Pre-Filter DP - Div 1	30SAB11CP501	32UJK31034	M	M	SI	S 1E EMC	Y (5) Y (6)
Iodine Filtr. Inlet HEPA DP - Div1	30SAB11CP502	32UJK31034	M	M	SI	S 1E EMC	Y (5) Y (6)
Iodine Filtration Charcoal DP - Div 1	30SAB11CP503	32UJK31034	M	M	SI	S 1E EMC	Y (5) Y (6)
Iodine Filtration Outlet HEPA DP - Div 1	30SAB11CP504	32UJK31034	M	M	SI	S 1E EMC	Y (5) Y (6)
SAB11 Filtr Train Temp Sens 1	30SAB11CT001	32UJK31034	M	M	SI	S 1E EMC	Y (5) Y (6)
SAB11 Filtr Train Temp Sens 2	30SAB11CT002	32UJK31034	M	M	SI	S 1E EMC	Y (5) Y (6)
Iodine Filtration Filter DP - Div 4	30SAB14CP001	33UJK31034	M	M	SI	S 1E EMC	Y (5) Y (6)
Iodine Filtration Pre-Filter DP - Div 4	30SAB14CP501	33UJK31034	M	M	SI	S 1E EMC	Y (5) Y (6)
Iodine Filtration Inlet HEPA DP - Div 4	30SAB14CP502	33UJK31034	M	M	SI	S 1E EMC	Y (5) Y (6)
Iodine Filtration Charcoal DP - Div 4	30SAB14CP503	33UJK31034	M	M	SI	S 1E EMC	Y (5) Y (6)
Iodine Filtration Outlet HEPA DP - Div 4	30SAB14CP504	33UJK31034	M	M	SI	S 1E EMC	Y (5) Y (6)
SAB14 Filtr Train Temp Sens 1	30SAB14CT001	33UJK31034	M	M	SI	S 1E EMC	Y (5) Y (6)
SAB14 Filtr Train Temp Sens 2	30SAB14CT002	33UJK31034	M	M	SI	S 1E EMC	Y (5) Y (6)
MCR Supply Duct Heater Oultet Air Flow	30SAB32CF001	32UJK26030	M	M	SI	S 1E EMC	Y (5) Y (6)
Tag/Shift Off Supply Duct Heat Exit Flow	30SAB32CF002	33UJK26030	M	M	SI	S 1E EMC	Y (5) Y (6)
WC & Kitchen Supply Duct Heat Exit Flow	30SAB32CF003	32UJK26015	M	M	SI	S 1E EMC	Y (5) Y (6)
Kitchen Supply Duct Heater Exit Flow	30SAB32CF004	33UJK26044	M	M	SI	S 1E EMC	Y (5) Y (6)
I&CService Supply Duct Heat Exit Flow	30SAB32CF005	33UJK26034	M	M	SI	S 1E EMC	Y (5) Y (6)
Special Use Supply Duct Heater Exit Flow	30SAB32CF006	33UJK26032	M	M	SI	S 1E EMC	Y (5) Y (6)
TechSupport Supply Duct Heater Exit Flow	30SAB32CF007	33UJK26030	M	M	SI	S 1E EMC	Y (5) Y (6)
DP between MCR and Anteroom A	30SAB32CP001	32UJK26030	M	M	SI	S 1E EMC	Y (5) Y (6)
DP between MCR and Anteroom B	30SAB32CP002	32UJK26030	M	M	SI	S 1E EMC	Y (5) Y (6)
DP between MCR and Anteroom C	30SAB32CP003	32UJK26030	M	M	SI	S 1E EMC	Y (5) Y (6)
DP between MCR and Anteroom (Local)	30SAB32CP501	32UJK26030	M	M	SI	S 1E EMC	Y (5) Y (6)
MCR Supply Duct Heater Oultet Air Temp	30SAB32CT001	32UJK26030	M	M	SI	S 1E EMC	Y (5) Y (6)
MCR Temp A	30SAB32CT002	32UJK26030	M	M	SI	S 1E EMC	Y (5) Y (6)
MCR Temp B	30SAB32CT003	32UJK26030	M	M	SI	S 1E EMC	Y (5) Y (6)

Table 3.11-1—List of Environmentally Qualified Electrical/I&C Equipment (Sheet 118 of 130)

Name Tag (Equipment Description)	Tag Number	Local Area KKS ID (Room Location)	EQ Environment (Note 1)	Radiation Environment Zone (Note 2)	EQ Designated Function (Note 3)	Safety Class (Note 4)	EQ Program Designation (Note 5)
Tagging/ShiftOffice Heater Exit Temp	30SAB32CT004	33UJK26030	M	M	SI	S 1E EMC	Y (5) Y (6)
Tagging Rm Temp	30SAB32CT005	33UJK26030	M	M	SI	S 1E EMC	Y (5) Y (6)
I&C Service Center Rm Temp A	30SAB32CT006	33UJK26034	M	M	SI	S 1E EMC	Y (5) Y (6)
SICS1 / Computer Rm 1 Temp	30SAB32CT007	32UJK26002	M	M	SI	S 1E EMC	Y (5) Y (6)
SICS2 / Computer Rm 2 Temp	30SAB32CT008	33UJK26002	M	M	SI	S 1E EMC	Y (5) Y (6)
WC & Kitchen Supply Duct Heat Exit Temp	30SAB32CT009	32UJK26015	M	M	SI	S 1E EMC	Y (5) Y (6)
Kitchen (MCR Staff) Temp	30SAB32CT010	32UJK26031	M	M	SI	S 1E EMC	Y (5) Y (6)
Kitchen Supply Duct Heater Outlet Temp	30SAB32CT011	33UJK26044	M	M	SI	S 1E EMC	Y (5) Y (6)
Kitchen Temp	30SAB32CT012	33UJK26044	M	M	SI	S 1E EMC	Y (5) Y (6)
I&CService Supply Duct Heater Exit Temp	30SAB32CT013	33UJK26034	M	M	SI	S 1E EMC	Y (5) Y (6)
I&C Service Center Rm Temp B	30SAB32CT014	33UJK26034	M	M	SI	S 1E EMC	Y (5) Y (6)
SpecialUse Supply Duct Heat Exit Temp	30SAB32CT015	33UJK26032	M	M	SI	S 1E EMC	Y (5) Y (6)
Special Use Temp	30SAB32CT016	33UJK26032	M	M	SI	S 1E EMC	Y (5) Y (6)
TechSupp Supply Duct Heat Exit Temp	30SAB32CT017	33UJK26030	M	M	SI	S 1E EMC	Y (5) Y (6)
Tech Support Center Temp	30SAB32CT018	33UJK26006	M	M	SI	S 1E EMC	Y (5) Y (6)
Essential Service Water Pump Building Ventilation System (ESWPBVS)							
Elec Heater Bldg 1	30SAQ01AH001	31UQB02001	M	M	SI	S 1E EMC	Y (5) Y (6)
Recirc Fan Bldg 1	30SAQ01AN001	31UQB02001	M	M	SI	S 1E EMC	Y (5) Y (6)
Elec Heater Bldg 2	30SAQ02AH001	32UQB02001	M	M	SI	S 1E EMC	Y (5) Y (6)
Recirc Fan Bldg 2	30SAQ02AN001	32UQB02001	M	M	SI	S 1E EMC	Y (5) Y (6)
Elec Heater Bldg 3	30SAQ03AH001	33UQB02001	M	M	SI	S 1E EMC	Y (5) Y (6)
Recirc Fan Bldg 3	30SAQ03AN001	33UQB02001	M	M	SI	S 1E EMC	Y (5) Y (6)
Elec Heater Bldg 4	30SAQ04AH001	34UQB02001	M	M	SI	S 1E EMC	Y (5) Y (6)
Recirc Fan Bldg 4	30SAQ04AN001	34UQB02001	M	M	SI	S 1E EMC	Y (5) Y (6)
Room Temp Sensor Bldg 1	30SAQ01CT001	31UQB02001	M	M	SI	S 1E EMC	Y (5) Y (6)
Room Temp Sensor Bldg 2	30SAQ02CT001	32UQB02001	M	M	SI	S 1E EMC	Y (5) Y (6)
Room Temp Sensor Bldg 3	30SAQ03CT001	33UQB02001	M	M	SI	S 1E EMC	Y (5) Y (6)
Room Temp Sensor Bldg 4	30SAQ04CT001	34UQB02001	M	M	SI	S 1E EMC	Y (5) Y (6)
Emergency Power Generating Building Ventilation System (EPGBVS)							
Supply Air Fan - Div 1	30SAD11AN001	31UBP02001	M	M	SI	S 1E EMC	Y (5) Y(6)
Supply Air Fan - Div 1	30SAD11AN002	31UBP02001	M	M	SI	S 1E EMC	Y (5) Y(6)
Recirc. Control Damper - Div 1	30SAD13AA001	31UBP01001	M	M	SI	S 1E EMC	Y (5) Y(6)

Table 3.11-1—List of Environmentally Qualified Electrical/I&C Equipment (Sheet 119 of 130)

Name Tag (Equipment Description)	Tag Number	Local Area KKS ID (Room Location)	EQ Environment (Note 1)	Radiation Environment Zone (Note 2)	EQ Designated Function (Note 3)	Safety Class (Note 4)	EQ Program Designation (Note 5)
Recirc Unit Heater - Div 1	30SAD13AH001	31UBP01001	M	M	SI	S 1E EMC	Y (5) Y(6)
Recirc Unit Supply Fan - Div 1	30SAD13AN001	31UBP01001	M	M	SI	S 1E EMC	Y (5) Y(6)
Exhaust Fan - Div 1	30SAD15AN001	31UBP01001	M	M	SI	S 1E EMC	Y (5) Y(6)
Exhaust Fan - Div 1	30SAD15AN002	31UBP01001	M	M	SI	S 1E EMC	Y (5) Y(6)
Main Tank Supp Damper A - Div 1	30SAD16AA007	31UBP01001	M	M	SI	S 1E EMC	Y (5) Y(6)
Main Tank Supp Damper B - Div 1	30SAD16AA008	31UBP01001	M	M	SI	S 1E EMC	Y (5) Y(6)
Fuel Tank Room Space Heater - Div 1	30SAD16AH001	31UBP01003	M	M	SI	S 1E EMC	Y (5) Y(6)
Fuel Tank Room Ventilation Fan - Div 1	30SAD16AN001	31UBP01003	M	M	SI	S 1E EMC	Y (5) Y(6)
Supply Air Fan - Div 2	30SAD21AN001	32UBP02001	M	M	SI	S 1E EMC	Y (5) Y(6)
Supply Air Fan - Div 2	30SAD21AN002	32UBP02001	M	M	SI	S 1E EMC	Y (5) Y(6)
Recirc. Control Damper - Div 2	30SAD23AA001	32UBP01001	M	M	SI	S 1E EMC	Y (5) Y(6)
Recirc Unit Heater - Div 2	30SAD23AH001	32UBP01001	M	M	SI	S 1E EMC	Y (5) Y(6)
Recirc Unit Supply Fan - Div 2	30SAD23AN001	32UBP01001	M	M	SI	S 1E EMC	Y (5) Y(6)
Exhaust Fan - Div 2	30SAD25AN001	32UBP01001	M	M	SI	S 1E EMC	Y (5) Y(6)
Exhaust Fan - Div 2	30SAD25AN002	32UBP01001	M	M	SI	S 1E EMC	Y (5) Y(6)
Main Tank Supp Damper A - Div 2	30SAD26AA007	32UBP01001	M	M	SI	S 1E EMC	Y (5) Y(6)
Main Tank Supp Damper B - Div 2	30SAD26AA008	32UBP01001	M	M	SI	S 1E EMC	Y (5) Y(6)
Fuel Tank Room Space Heater - Div 2	30SAD26AH001	32UBP01003	M	M	SI	S 1E EMC	Y (5) Y(6)
Fuel Tank Room Ventilation Fan - Div 2	30SAD26AN001	32UBP01003	M	M	SI	S 1E EMC	Y (5) Y(6)
Supply Air Fan - Div 3	30SAD31AN001	33UBP02001	M	M	SI	S 1E EMC	Y (5) Y(6)
Supply Air Fan - Div 3	30SAD31AN002	33UBP02001	M	M	SI	S 1E EMC	Y (5) Y(6)
Recirc. Control Damper - Div 3	30SAD33AA001	33UBP01001	M	M	SI	S 1E EMC	Y (5) Y(6)
Recirc Unit Heater - Div 3	30SAD33AH001	33UBP01001	M	M	SI	S 1E EMC	Y (5) Y(6)
Recirc Unit Supply Fan - Div 3	30SAD33AN001	33UBP01001	M	M	SI	S 1E EMC	Y (5) Y(6)
Exhaust Fan - Div 3	30SAD35AN001	33UBP01001	M	M	SI	S 1E EMC	Y (5) Y(6)
Exhaust Fan - Div 3	30SAD35AN002	33UBP01001	M	M	SI	S 1E EMC	Y (5) Y(6)
Main Tank Supp Damper A - Div 3	30SAD36AA007	33UBP01001	M	M	SI	S 1E EMC	Y (5) Y(6)
Main Tank Supp Damper B - Div 3	30SAD36AA008	33UBP01001	M	M	SI	S 1E EMC	Y (5) Y(6)
Fuel Tank Room Space Heater - Div 3	30SAD36AH001	33UBP01003	M	M	SI	S 1E EMC	Y (5) Y(6)
Fuel Tank Room Ventilation Fan - Div 3	30SAD36AN001	33UBP01003	M	M	SI	S 1E EMC	Y (5) Y(6)
Supply Air Fan - Div 4	30SAD41AN001	34UBP02001	M	M	SI	S 1E EMC	Y (5) Y(6)
Supply Air Fan - Div 4	30SAD41AN002	34UBP02001	M	M	SI	S 1E EMC	Y (5) Y(6)
Recirc. Control Damper - Div 4	30SAD43AA001	34UBP01001	M	M	SI	S 1E EMC	Y (5) Y(6)

Table 3.11-1—List of Environmentally Qualified Electrical/I&C Equipment (Sheet 120 of 130)

Name Tag (Equipment Description)	Tag Number	Local Area KKS ID (Room Location)	EQ Environment (Note 1)	Radiation Environment Zone (Note 2)	EQ Designated Function (Note 3)	Safety Class (Note 4)			EQ Program Designation (Note 5)	
Recirc Unit Heater - Div 4	30SAD43AH001	34UBP01001	M	M	SI	S	1E	EMC	Y (5)	Y(6)
Recirc Unit Supply Fan - Div 4	30SAD43AN001	34UBP01001	M	M	SI	S	1E	EMC	Y (5)	Y(6)
Exhaust Fan - Div 4	30SAD45AN001	34UBP01001	M	M	SI	S	1E	EMC	Y (5)	Y(6)
Exhaust Fan - Div 4	30SAD45AN002	34UBP01001	M	M	SI	S	1E	EMC	Y (5)	Y(6)
Main Tank Supp Damper A - Div 4	30SAD46AA007	34UBP01001	M	M	SI	S	1E	EMC	Y (5)	Y(6)
Main Tank Supp Damper B - Div 4	30SAD46AA008	34UBP01001	M	M	SI	S	1E	EMC	Y (5)	Y(6)
Fuel Tank Room Space Heater - Div 4	30SAD46AH001	34UBP01003	M	M	SI	S	1E	EMC	Y (5)	Y(6)
Fuel Tank Room Ventilation Fan - Div 4	30SAD46AN001	34UBP01003	M	M	SI	S	1E	EMC	Y (5)	Y(6)
Supply Components Pressure - Div 1	30SAD11CP501	31UBP02001	M	M	SI	S	1E	EMC	Y (5)	Y(6)
Supply Components Pressure - Div 1	30SAD11CP502	31UBP02001	M	M	SI	S	1E	EMC	Y (5)	Y(6)
Supply Filter Pressure - Div 1	30SAD11CP511	31UBP02001	M	M	SI	S	1E	EMC	Y (5)	Y(6)
Supply Filter Pressure - Div 1	30SAD11CP512	31UBP02001	M	M	SI	S	1E	EMC	Y (5)	Y(6)
Building Supply Air Temperature - Div 1	30SAD11CT001	31UBP02001	M	M	SI	S	1E	EMC	Y (5)	Y(6)
Diesel Hall Area Temperature A - Div 1	30SAD12CT001	31UBP01001	M	M	SI	S	1E	EMC	Y (5)	Y(6)
Diesel Hall Area Temperature B - Div 1	30SAD12CT002	31UBP01001	M	M	SI	S	1E	EMC	Y (5)	Y(6)
Diesel Hall Area Temperature C - Div 1	30SAD12CT003	31UBP01001	M	M	SI	S	1E	EMC	Y (5)	Y(6)
Diesel Hall Area Temperature D - Div 1	30SAD12CT004	31UBP01001	M	M	SI	S	1E	EMC	Y (5)	Y(6)
Diesel Hall Area Temperature E - Div 1	30SAD12CT005	31UBP01001	M	M	SI	S	1E	EMC	Y (5)	Y(6)
Recirc Flow Rate - Div 1	30SAD13CF001	31UBP01001	M	M	SI	S	1E	EMC	Y (5)	Y(6)
EDG Control Rm Moisture - Div 1	30SAD13CM001	31UBP01002	M	M	SII	NS-AQ	1E	EMC	Y (5)	Y(6)
Recirc Pre-filter Pressure - Div 1	30SAD13CP501	31UBP01001	M	M	SI	S	1E	EMC	Y (5)	Y(6)
Recirc HEPA Filter Pressure - Div 1	30SAD13CP502	31UBP01001	M	M	SI	S	1E	EMC	Y (5)	Y(6)
Recirc Supply Temperature - Div 1	30SAD13CT001	31UBP01001	M	M	SI	S	1E	EMC	Y (5)	Y(6)
EDG Control Rm Temperature A - Div 1	30SAD13CT002	31UBP01002	M	M	SI	S	1E	EMC	Y (5)	Y(6)
EDG Control Rm Temperature B - Div 1	30SAD13CT003	31UBP01002	M	M	SI	S	1E	EMC	Y (5)	Y(6)
Recirc Heater Outlet Temperature - Div 1	30SAD13CT004	31UBP01001	M	M	SI	S	1E	EMC	Y (5)	Y(6)
Diesel Hall Heater/Fan Temp A - Div 1	30SAD14CT001	31UBP01001	M	M	SII	NS-AQ	1E	EMC	Y (5)	Y(6)
Diesel Hall Heater/Fan Temp B - Div 1	30SAD14CT002	31UBP01001	M	M	SII	NS-AQ	1E	EMC	Y (5)	Y(6)
Diesel Hall Heater/Fan Temp C - Div 1	30SAD14CT003	31UBP01001	M	M	SII	NS-AQ	1E	EMC	Y (5)	Y(6)
Diesel Hall Heater/Fan Temp D - Div 1	30SAD14CT004	31UBP01001	M	M	SII	NS-AQ	1E	EMC	Y (5)	Y(6)
Main Tank Temperature - Div 1	30SAD16CT001	31UBP01003	M	M	SI	S	1E	EMC	Y (5)	Y(6)
Supply Components Pressure - Div 2	30SAD21CP501	32UBP02001	M	M	SI	S	1E	EMC	Y (5)	Y(6)
Supply Components Pressure - Div 2	30SAD21CP502	32UBP02001	M	M	SI	S	1E	EMC	Y (5)	Y(6)

Table 3.11-1—List of Environmentally Qualified Electrical/I&C Equipment (Sheet 121 of 130)

Name Tag (Equipment Description)	Tag Number	Local Area KKS ID (Room Location)	EQ Environment (Note 1)	Radiation Environment Zone (Note 2)	EQ Designated Function (Note 3)	Safety Class (Note 4)	EQ Program Designation (Note 5)
Supply Filter Pressure - Div 2	30SAD21CP511	32UBP02001	M	M	SI	S 1E EMC	Y (5) Y(6)
Supply Filter Pressure - Div 2	30SAD21CP512	32UBP02001	M	M	SI	S 1E EMC	Y (5) Y(6)
Building Supply Air Temperature - Div 2	30SAD21CT001	32UBP02001	M	M	SI	S 1E EMC	Y (5) Y(6)
Diesel Hall Area Temperature A - Div 2	30SAD22CT001	32UBP01001	M	M	SI	S 1E EMC	Y (5) Y(6)
Diesel Hall Area Temperature B - Div 2	30SAD22CT002	32UBP01001	M	M	SI	S 1E EMC	Y (5) Y(6)
Diesel Hall Area Temperature C - Div 2	30SAD22CT003	32UBP01001	M	M	SI	S 1E EMC	Y (5) Y(6)
Diesel Hall Area Temperature D - Div 2	30SAD22CT004	32UBP01001	M	M	SI	S 1E EMC	Y (5) Y(6)
Diesel Hall Area Temperature E - Div 2	30SAD22CT005	32UBP01001	M	M	SI	S 1E EMC	Y (5) Y(6)
Recirc Flow Rate - Div 2	30SAD23CF001	32UBP01001	M	M	SI	S 1E EMC	Y (5) Y(6)
EDG Control Rm Moisture - Div 1	30SAD23CM001	32UBP01002	M	M	SII	NS-AQ 1E EMC	Y (5) Y(6)
Recirc Pre-filter Pressure - Div 2	30SAD23CP501	32UBP01001	M	M	SI	S 1E EMC	Y (5) Y(6)
Recirc HEPA Filter Pressure - Div 2	30SAD23CP502	32UBP01001	M	M	SI	S 1E EMC	Y (5) Y(6)
Recirc Supply Temperature - Div 2	30SAD23CT001	32UBP01001	M	M	SI	S 1E EMC	Y (5) Y(6)
EDG Control Rm Temperature A - Div 2	30SAD23CT002	32UBP01002	M	M	SI	S 1E EMC	Y (5) Y(6)
EDG Control Rm Temperature B - Div 2	30SAD23CT003	32UBP01002	M	M	SI	S 1E EMC	Y (5) Y(6)
Recirc Heater Outlet Temperature - Div 2	30SAD23CT004	32UBP01001	M	M	SI	S 1E EMC	Y (5) Y(6)
Diesel Hall Heater/Fan Temp A - Div 2	30SAD24CT001	32UBP01001	M	M	SII	NS-AQ 1E EMC	Y (5) Y(6)
Diesel Hall Heater/Fan Temp B - Div 2	30SAD24CT002	32UBP01001	M	M	SII	NS-AQ 1E EMC	Y (5) Y(6)
Diesel Hall Heater/Fan Temp C - Div 2	30SAD24CT003	32UBP01001	M	M	SII	NS-AQ 1E EMC	Y (5) Y(6)
Diesel Hall Heater/Fan Temp D - Div 2	30SAD24CT004	32UBP01001	M	M	SII	NS-AQ 1E EMC	Y (5) Y(6)
Main Tank Temperature - Div 2	30SAD26CT001	32UBP01003	M	M	SI	S 1E EMC	Y (5) Y(6)
Supply Components Pressure - Div 3	30SAD31CP501	33UBP02001	M	M	SI	S 1E EMC	Y (5) Y(6)
Supply Components Pressure - Div 3	30SAD31CP502	33UBP02001	M	M	SI	S 1E EMC	Y (5) Y(6)
Supply Filter Pressure - Div 3	30SAD31CP511	33UBP02001	M	M	SI	S 1E EMC	Y (5) Y(6)
Supply Filter Pressure - Div 3	30SAD31CP512	33UBP02001	M	M	SI	S 1E EMC	Y (5) Y(6)
Building Supply Air Temperature - Div 3	30SAD31CT001	33UBP02001	M	M	SI	S 1E EMC	Y (5) Y(6)
Diesel Hall Area Temperature A - Div 3	30SAD32CT001	33UBP01001	M	M	SI	S 1E EMC	Y (5) Y(6)
Diesel Hall Area Temperature B - Div 3	30SAD32CT002	33UBP01001	M	M	SI	S 1E EMC	Y (5) Y(6)
Diesel Hall Area Temperature C - Div 3	30SAD32CT003	33UBP01001	M	M	SI	S 1E EMC	Y (5) Y(6)
Diesel Hall Area Temperature D - Div 3	30SAD32CT004	33UBP01001	M	M	SI	S 1E EMC	Y (5) Y(6)
Diesel Hall Area Temperature E - Div 3	30SAD32CT005	33UBP01001	M	M	SI	S 1E EMC	Y (5) Y(6)
Recirc Flow Rate - Div 3	30SAD33CF001	33UBP01001	M	M	SI	S 1E EMC	Y (5) Y(6)
EDG Control Rm Moisture - Div 1	30SAD33CM001	33UBP01002	M	M	SII	NS-AQ 1E EMC	Y (5) Y(6)

Table 3.11-1—List of Environmentally Qualified Electrical/I&C Equipment (Sheet 122 of 130)

Name Tag (Equipment Description)	Tag Number	Local Area KKS ID (Room Location)	EQ Environment (Note 1)	Radiation Environment Zone (Note 2)	EQ Designated Function (Note 3)	Safety Class (Note 4)	EQ Program Designation (Note 5)
Recirc Pre-filter Pressure - Div 3	30SAD33CP501	33UBP01001	M	M	SI	S 1E EMC	Y (5) Y(6)
Recirc HEPA Filter Pressure - Div 3	30SAD33CP502	33UBP01001	M	M	SI	S 1E EMC	Y (5) Y(6)
Recirc Supply Temperature - Div 3	30SAD33CT001	33UBP01001	M	M	SI	S 1E EMC	Y (5) Y(6)
EDG Control Rm Temperature A - Div 3	30SAD33CT002	33UBP01002	M	M	SI	S 1E EMC	Y (5) Y(6)
EDG Control Rm Temperature B - Div 3	30SAD33CT003	33UBP01002	M	M	SI	S 1E EMC	Y (5) Y(6)
Recirc Heater Outlet Temperature - Div 3	30SAD33CT004	33UBP01001	M	M	SI	S 1E EMC	Y (5) Y(6)
Diesel Hall Heater/Fan Temp A - Div 3	30SAD34CT001	33UBP01001	M	M	SII	NS-AQ 1E EMC	Y (5) Y(6)
Diesel Hall Heater/Fan Temp B - Div 3	30SAD34CT002	33UBP01001	M	M	SII	NS-AQ 1E EMC	Y (5) Y(6)
Diesel Hall Heater/Fan Temp C - Div 3	30SAD34CT003	33UBP01001	M	M	SII	NS-AQ 1E EMC	Y (5) Y(6)
Diesel Hall Heater/Fan Temp D - Div 3	30SAD34CT004	33UBP01001	M	M	SII	NS-AQ 1E EMC	Y (5) Y(6)
Main Tank Temperature - Div 3	30SAD36CT001	33UBP01003	M	M	SI	S 1E EMC	Y (5) Y(6)
Supply Components Pressure - Div 4	30SAD41CP501	34UBP02001	M	M	SI	S 1E EMC	Y (5) Y(6)
Supply Components Pressure - Div 4	30SAD41CP502	34UBP02001	M	M	SI	S 1E EMC	Y (5) Y(6)
Supply Filter Pressure - Div 4	30SAD41CP511	34UBP02001	M	M	SI	S 1E EMC	Y (5) Y(6)
Supply Filter Pressure - Div 4	30SAD41CP512	34UBP02001	M	M	SI	S 1E EMC	Y (5) Y(6)
Building Supply Air Temperature - Div 4	30SAD41CT001	34UBP02001	M	M	SI	S 1E EMC	Y (5) Y(6)
Diesel Hall Area Temperature A - Div 4	30SAD42CT001	34UBP01001	M	M	SI	S 1E EMC	Y (5) Y(6)
Diesel Hall Area Temperature B - Div 4	30SAD42CT002	34UBP01001	M	M	SI	S 1E EMC	Y (5) Y(6)
Diesel Hall Area Temperature C - Div 4	30SAD42CT003	34UBP01001	M	M	SI	S 1E EMC	Y (5) Y(6)
Diesel Hall Area Temperature D - Div 4	30SAD42CT004	34UBP01001	M	M	SI	S 1E EMC	Y (5) Y(6)
Diesel Hall Area Temperature E - Div 4	30SAD42CT005	34UBP01001	M	M	SI	S 1E EMC	Y (5) Y(6)
Recirc Flow Rate - Div 4	30SAD43CF001	34UBP01001	M	M	SI	S 1E EMC	Y (5) Y(6)
EDG Control Rm Moisture - Div 1	30SAD43CM001	34UBP01002	M	M	SII	NS-AQ 1E EMC	Y (5) Y(6)
Recirc Pre-filter Pressure - Div 4	30SAD43CP501	34UBP01001	M	M	SI	S 1E EMC	Y (5) Y(6)
Recirc HEPA Filter Pressure - Div 4	30SAD43CP502	34UBP01001	M	M	SI	S 1E EMC	Y (5) Y(6)
Recirc Supply Temperature - Div 4	30SAD43CT001	34UBP01001	M	M	SI	S 1E EMC	Y (5) Y(6)
EDG Control Rm Temperature A - Div 4	30SAD43CT002	34UBP01002	M	M	SI	S 1E EMC	Y (5) Y(6)
EDG Control Rm Temperature B - Div 4	30SAD43CT003	34UBP01002	M	M	SI	S 1E EMC	Y (5) Y(6)
Recirc Heater Outlet Temperature - Div 4	30SAD43CT004	34UBP01001	M	M	SI	S 1E EMC	Y (5) Y(6)
Diesel Hall Heater/Fan Temp A - Div 4	30SAD44CT001	34UBP01001	M	M	SII	NS-AQ 1E EMC	Y (5) Y(6)
Diesel Hall Heater/Fan Temp B - Div 4	30SAD44CT002	34UBP01001	M	M	SII	NS-AQ 1E EMC	Y (5) Y(6)
Diesel Hall Heater/Fan Temp C - Div 4	30SAD44CT003	34UBP01001	M	M	SII	NS-AQ 1E EMC	Y (5) Y(6)
Diesel Hall Heater/Fan Temp D - Div 4	30SAD44CT004	34UBP01001	M	M	SII	NS-AQ 1E EMC	Y (5) Y(6)

Table 3.11-1—List of Environmentally Qualified Electrical/I&C Equipment (Sheet 123 of 130)

Name Tag (Equipment Description)	Tag Number	Local Area KKS ID (Room Location)	EQ Environment (Note 1)	Radiation Environment Zone (Note 2)	EQ Designated Function (Note 3)	Safety Class (Note 4)	EQ Program Designation (Note 5)
Main Tank Temperature - Div 4	30SAD46CT001	34UBP01003	M	M	SI	S 1E EMC	Y (5) Y(6)
CONTAINMENT ISOLATION SYSTEMS							
Fuel Pool Cooling and Purification System (FPCPS)							
ILCO Isolation Valve	30FAL10AA003	30UJA11021	H	H	SII	NS-AQ	Y (5)
FPP to RB Pool Inside CI Valve Actuator	30FAL12AA001	30UJA07016	H	H	ES PAM SI	S 1E EMC	Y (1) Y (5)
FPP to RB Pool Outside CI Valve Actuator	30FAL12AA002	30UFA06045	M	H	ES PAM SI	S 1E EMC	Y (2) Y (5) Y (6)
FPP to RB Pool Outside CI Valve Actuator	30FAL15AA002	30UFA10045	M	H	ES PAM SI	S 1E EMC	Y (2) Y (5) Y (6)
Demineralized Water Distribution System (DWDS)							
Demienalized Water Outer Cotainment Isol	30GHC74AA001	30UFA21045	M	H	ES PAM SI	S 1E EMC	Y (2) Y (5) Y (6)
Demienalized Water Inner Cotainment Isol	30GHC74AA002	30UJA18013	H	H	ES PAM SI	S 1E EMC	Y (1) Y (5)
Leak-Off System (LOS)							
CIDS Inside Ci Valve Actuator	30JMM10AA006	30UJA23013	H	H	ES PAM SI	S 1E EMC	Y (1) Y (5)
CIDS Outside Ci Valve Actuator	30JMM10AA007	30UFA24095	M	H	ES PAM SI	S 1E EMC	Y (2) Y (5) Y (6)
CLES CI VAlve Actuator: Located Inside R	30JMM23AA001	30UJA11016	H	H	ES PAM SI	S 1E EMC	Y (1) Y (5)
CLES CI Valve Actuator: Located Inside A	30JMM23AA002	30UJB05002	M	M	ES PAM SI	S 1E EMC	Y (5) Y (6)
Severe Accident Heat Removal System (SAHRS)							
Suction Line From Irwst Outer CI Valve A	30JMQ40AA001	34UJH01010	M	H	ES PAM SI	S 1E EMC	Y (2) Y (5) Y (6)
Spraying Line Outer CI Valve Actuator	30JMQ41AA001	34UJH05007	M	H	ES PAM SI	S 1E EMC	Y (2) Y (5) Y (6)
Active Recirculation Line Outer CI Valve	30JMQ42AA001	34UJH05007	M	H	ES PAM SI	S 1E EMC	Y (2) Y (5) Y (6)
Backflushing Line Outer CI Valve Actuato	30JMQ43AA001	34UJH05007	M	H	ES PAM SI	S 1E EMC	Y (2) Y (5) Y (6)
Gaseous Waste Processing System (GWPS)							
Actuator - Containment Isolation Valve	30KPL84AA002	30UFA06095	M	H	ES PAM SI	S 1E EMC	Y (2) Y (5) Y (6)
Actuator - Containment Isolation Valve	30KPL84AA003	30UJA07016	H	H	ES PAM SI	S 1E EMC	Y (1) Y (5)
Actuator - Containment Isolation Valve	30KPL85AA003	30UJA07016	H	H	ES PAM SI	S 1E EMC	Y (1) Y (5)
Actuator - Containment Isolation Valve	30KPL85AA004	30UFA06095	M	H	ES PAM SI	S 1E EMC	Y (2) Y (5) Y (6)
Condensate (Inside Containment) System (CS)							
Motor for C I-V	30LCA90AA003	32UJE34003	M	M	ES PAM SI	S 1E EMC	Y (5) Y (6)
Condensate C I-V Motor	30LCA90AA005	30UJA34014	H	H	ES PAM SI	S 1E EMC	Y (1) Y (5)
Motor for Condensate C I-V	30LCA90AA006	32UJE34003	M	M	ES PAM SI	S 1E EMC	Y (5) Y (6)
Condensate C I-V Position Sensor	30LCA90CG004	30UJA34014	H	H	ES SI	S 1E	Y (1) Y (5)
Condensate Pressure Instr.	30LCA90CP002	30UJA07018	H	H	SII	NS-AQ	Y (1) Y (5)

Table 3.11-1—List of Environmentally Qualified Electrical/I&C Equipment (Sheet 124 of 130)

Name Tag (Equipment Description)	Tag Number	Local Area KKS ID (Room Location)	EQ Environment (Note 1)	Radiation Environment Zone (Note 2)	EQ Designated Function (Note 3)	Safety Class (Note 4)	EQ Program Designation (Note 5)
Condensate Pressure Tap	30LCA90CP402	30UJA07018	H	H	SII	NS-AQ	Y (1) Y (5)
Condensate Pressure Tap	30LCA90CP501	30UJA07018	H	H	SII	NS-AQ	Y (1) Y (5)
Condensate Temperature Transmitter	30LCA90CT001	30UJA07018	H	H	SII	NS-AQ	Y (1) Y (5)
Condensate Temperature Transmitter	30LCA90CT002	30UJA07018	H	H	SII	NS-AQ	Y (1) Y (5)
Condensate Thermo Couple	30LCA90CT401	30UJA07018	H	H	SII	NS-AQ	Y (1) Y (5)
Condensate Thermo Couple	30LCA90CT402	30UJA07018	H	H	SII	NS-AQ	Y (1) Y (5)
Condensate Thermo Couple	30LCA90CT403	30UJA07018	H	H	SII	NS-AQ	Y (1) Y (5)
Central Gas Distribution (Nitrogen) System (CGDS)							
QJB Outside Containment Isolation Valve	30QJB40AA001	30UFA24045	M	H	ES PAM SI	S 1E EMC	Y (2) Y (5) Y (6)
QJB INside Containment Isolation Valve A	30QJB40AA002	30UJA23013	H	H	ES PAM SI	S 1E EMC	Y (1) Y (5)
QJB Outside Containment Isolation Valve	30QJB40AA003	30UFA10095	M	H	ES PAM SI	S 1E EMC	Y (2) Y (5) Y (6)
QJB Inside Containment Isolation Valve A	30QJB40AA004	30UJA11016	H	H	ES PAM SI	S 1E EMC	Y (1) Y (5)
Operational Chilled Water System - Nuclear Island (OCWS)							
Motor for Valve 30QNJ41AA002	30QNJ41AA002	30UFA17095	M	H	ES PAM SI	S 1E EMC	Y (2) Y (5) Y (6)
Motor for Valve 30QNJ41AA027	30QNJ41AA027	30UJA18016	H	H	ES PAM SI	S 1E EMC	Y (1) Y (5)
Motor for Valve 30QNJ41AA028	30QNJ41AA028	30UFA17095	M	H	ES PAM SI	S 1E EMC	Y (2) Y (5) Y (6)
Secondary Sampling (SG Blowdown) System (SECSS)							
SG1 2ndary Sampling Outer C I-V Motor	30QUC11AA001	30UFA10045	M	H	ES PAM SI	S 1E EMC	Y (2) Y (5) Y (6)
SG1 2ndary Sampling Inner C I-V Motor	30QUC11AA011	30UJA11013	H	H	ES PAM SI	S 1E EMC	Y (1) Y (5)
SG2 2ndary Sampling Outer C I-V Motor	30QUC12AA001	30UFA10045	M	H	ES PAM SI	S 1E EMC	Y (2) Y (5) Y (6)
SG2 2ndary Sampling Inner C I-V Motor	30QUC12AA011	30UJA11013	H	H	ES PAM SI	S 1E EMC	Y (1) Y (5)
SG3 2ndary Sampling Outer C I-V Motor	30QUC13AA001	30UFA06083	M	H	ES PAM SI	S 1E EMC	Y (2) Y (5) Y (6)
SG3 2ndary Sampling Inner C I-V Motor	30QUC13AA011	30UJA11016	H	H	ES PAM SI	S 1E EMC	Y (1) Y (5)
SG4 2ndary Sampling Outer C I-V Motor	30QUC14AA001	30UFA10095	M	H	ES PAM SI	S 1E EMC	Y (2) Y (5) Y (6)
SG4 2ndary Sampling Inner C I-V Motor	30QUC14AA011	30UJA11016	H	H	ES PAM SI	S 1E EMC	Y (1) Y (5)
Compressed Air System (CAS)							
Compressed Air Ourter Cotainment Isolati	30SCB01AA001	30UFA13054	M	H	ES PAM SI	S 1E EMC	Y (2) Y (5) Y (6)
Compressed Air Inner Cotainment Isolatio	30SCB01AA002	30UJA15016	H	H	ES PAM SI	S 1E EMC	Y (1) Y (5)
Fire Water Distribution System (FWDS)							
Fire Water Distribution System CI Valve	30SGB30AA031	30UFA13054	M	H	ES PAM SI	S 1E EMC	Y (2) Y (5) Y (6)
Fire Water Distribution System CI Valve	30SGB30AA032	30UJA15016	H	H	ES PAM SI	S 1E EMC	Y (1) Y (5)

Table 3.11-1—List of Environmentally Qualified Electrical/I&C Equipment (Sheet 125 of 130)

Name Tag (Equipment Description)	Tag Number	Local Area KKS ID (Room Location)	EQ Environment (Note 1)	Radiation Environment Zone (Note 2)	EQ Designated Function (Note 3)	Safety Class (Note 4)	EQ Program Designation (Note 5)
Nuclear Island Drain & Vent System (NI DVS)							
Inner Cont Iso Vlv Actuator	30KTA10AA017	30UJA07016	H	H	ES PAM SI	S 1E EMC	Y (1) Y (5)
Outer Cont Iso Valve Actuator	30KTA10AA018	30UFA06045	M	H	ES PAM SI	S 1E EMC	Y (2) Y (5) Y (6)
Inner Cont Iso Vlv Floor Drn 1 Actuator	30KTC10AA005	30UJA07016	H	H	ES PAM SI	S 1E EMC	Y (1) Y (5)
Outer Cont Iso Vlv Floor Drn 1 Actuator	30KTC10AA006	30UFA06095	M	H	ES PAM SI	S 1E EMC	Y (2) Y (5) Y (6)
Outer Cont Iso Vlv Chem Reinj Actuator	30KTC10AA010	30UFA06095	M	H	ES PAM SI	S 1E EMC	Y (2) Y (5) Y (6)
Outer Cont Iso Vlv Floor Drn 2 Actuator	30KTD10AA015	30UFA06095	M	H	ES PAM SI	S 1E EMC	Y (2) Y (5) Y (6)
Inner Cont Iso Vlv Floor Drn 2 Actuator	30KTD10AA024	30UJA07016	H	H	ES PAM SI	S 1E EMC	Y (1) Y (5)
Outer Cont Iso Vlv Annulus Actuator	30KTD10AA025	30UFA10095	M	H	ES PAM SI	S 1E EMC	Y (2) Y (5) Y (6)
Level Sensor for Sump KTE20 BB001	30KTE20CL001	31UJH01026	M	H	SI	S 1E EMC	Y (2) Y (5) Y (6)
Level Sensor for Sump KTE20 BB002	30KTE20CL003	32UJH01038	M	H	SI	S 1E EMC	Y (2) Y (5) Y (6)
Level Sensor for Sump KTE20 BB003	30KTE20CL005	33UJH01038	M	H	SI	S 1E EMC	Y (2) Y (5) Y (6)
Level Sensor for Sump KTE20 BB004	30KTE20CL007	34UJH01026	M	H	SI	S 1E EMC	Y (2) Y (5) Y (6)
Level Sensor for Sump 30KTC30 BB001	30KTC30CL001	30UFA01042	M	H	SI	S 1E EMC	Y (2) Y (5) Y (6)
Level Sensor for Sump 30KTC30 BB002	30KTC30CL003	30UFA01097	M	H	SI	S 1E EMC	Y (2) Y (5) Y (6)
Level Sensor for Sump 30KTD10 BB001	30KTD10CL002	30UJB05003	M	M	SI	S 1E EMC	Y (5) Y (6)
Level Sensor for Sump 30KTC10 BB001	30KTC10CL001	30UJA11013	H	H	SI	S 1E EMC	Y (1) Y (5)
Level Sensor for Sump 30KTC10 BB001	30KTC10CL002	30UJA11013	H	H	SI	S 1E EMC	Y (1) Y (5)
Level Sensor for Sump 30KTC10 BB002	30KTC10CL005	30UJA11016	H	H	SI	S 1E EMC	Y (1) Y (5)
Containment Penetrations - Electrical							
Electrical Containment Penetration JML10GD130	JML10GD130	30UJB18F0130B	H	H	RT ES PAM SI	S 1E	Y(1) Y(5)
Electrical Containment Penetration JML10GD131	JML10GD131	30UJB18F0131B	H	H	RT ES PAM SI	S 1E	Y(1) Y(5)
Electrical Containment Penetration JML10GD132	JML10GF132	30UJB18F0132B	H	H	RT ES PAM SI	S 1E	Y(1) Y(5)
Electrical Containment Penetration JML10GD133	JML10GF133	30UJB18F0133B	H	H	RT ES PAM SI	S 1E	Y(1) Y(5)
Electrical Containment Penetration JML10GD134	JML10GF134	30UJB18F0134B	H	H	RT ES PAM SI	S 1E	Y(1) Y(5)
Electrical Containment Penetration JML10GD135	JML10GF135	30UJB18F0135B	H	H	RT ES PAM SI	S 1E	Y(1) Y(5)

Table 3.11-1—List of Environmentally Qualified Electrical/I&C Equipment (Sheet 126 of 130)

Name Tag (Equipment Description)	Tag Number	Local Area KKS ID (Room Location)	EQ Environment (Note 1)	Radiation Environment Zone (Note 2)	EQ Designated Function (Note 3)				Safety Class (Note 4)		EQ Program Designation (Note 5)	
Electrical Containment Penetration JML10GD136	JML10GP136	30UJB18F0136B	H	H	RT	ES	PAM	SI	S	1E	Y(1)	Y(5)
Electrical Containment Penetration JML10GD137	JML10GF137	30UJB18F0137B	H	H	RT	ES	PAM	SI	S	1E	Y(1)	Y(5)
Electrical Containment Penetration JML10GD138	JML10GF138	30UJB18F0138B	H	H	RT	ES	PAM	SI	S	1E	Y(1)	Y(5)
Electrical Containment Penetration JML10GD139	JML10GF139	30UJB18F0139B	H	H	RT	ES	PAM	SI	S	1E	Y(1)	Y(5)
Electrical Containment Penetration JML10GD140	JML10GE140	30UJB18F0140B	H	H	RT	ES	PAM	SI	S	1E	Y(1)	Y(5)
Electrical Containment Penetration JML10GD141	JML10GP141	30UJB18F0141B	H	H	RT	ES	PAM	SI	S	1E	Y(1)	Y(5)
Electrical Containment Penetration JML10GD142	JML10GE142	30UJB15F0142B	H	H	RT	ES	PAM	SI	S	1E	Y(1)	Y(5)
Electrical Containment Penetration JML10GD143	JML10GE143	30UJB15F0143B	H	H	RT	ES	PAM	SI	S	1E	Y(1)	Y(5)
Electrical Containment Penetration JML10GD144	JML10GE144	30UJB15F0144B	H	H	RT	ES	PAM	SI	S	1E	Y(1)	Y(5)
Electrical Containment Penetration JML10GD145	JML10GE145	30UJB15F0145B	H	H	RT	ES	PAM	SI	S	1E	Y(1)	Y(5)
Electrical Containment Penetration JML10GD146	JML10GE146	30UJB15F0146B	H	H	RT	ES	PAM	SI	S	1E	Y(1)	Y(5)
Electrical Containment Penetration JML10GD147	JML10GE147	30UJB15F0147B	H	H	RT	ES	PAM	SI	S	1E	Y(1)	Y(5)
Electrical Containment Penetration JML10GD148	JML10GE148	30UJB18F0148B	H	H	RT	ES	PAM	SI	S	1E	Y(1)	Y(5)
Electrical Containment Penetration JML10GD149	JML10GE149	30UJB18F0149B	H	H	RT	ES	PAM	SI	S	1E	Y(1)	Y(5)
Electrical Containment Penetration JML20GD230	JML20GD230	30UJB18F0230B	H	H	RT	ES	PAM	SI	S	1E	Y(1)	Y(5)
Electrical Containment Penetration JML20GD231	JML20GD231	30UJB18F0231B	H	H	RT	ES	PAM	SI	S	1E	Y(1)	Y(5)
Electrical Containment Penetration JML20GD232	JML20GE232	30UJB18F0232B	H	H	RT	ES	PAM	SI	S	1E	Y(1)	Y(5)
Electrical Containment Penetration JML20GD233	JML20GP233	30UJB18F0233B	H	H	RT	ES	PAM	SI	S	1E	Y(1)	Y(5)

Table 3.11-1—List of Environmentally Qualified Electrical/I&C Equipment (Sheet 127 of 130)

Name Tag (Equipment Description)	Tag Number	Local Area KKS ID (Room Location)	EQ Environment (Note 1)	Radiation Environment Zone (Note 2)	EQ Designated Function (Note 3)				Safety Class (Note 4)		EQ Program Designation (Note 5)	
Electrical Containment Penetration JML20GD234	JML20GE234	30UJB18F0234B	H	H	RT	ES	PAM	SI	S	1E	Y(1)	Y(5)
Electrical Containment Penetration JML20GD235	JML20GE235	30UJB18F0235B	H	H	RT	ES	PAM	SI	S	1E	Y(1)	Y(5)
Electrical Containment Penetration JML20GD236	JML20GE236	30UJB18F0236B	H	H	RT	ES	PAM	SI	S	1E	Y(1)	Y(5)
Electrical Containment Penetration JML20GD237	JML20GF237	30UJB18F0237B	H	H	RT	ES	PAM	SI	S	1E	Y(1)	Y(5)
Electrical Containment Penetration JML20GD238	JML20GE238	30UJB18F0238B	H	H	RT	ES	PAM	SI	S	1E	Y(1)	Y(5)
Electrical Containment Penetration JML20GD239	JML20GE239	30UJB18F0239B	H	H	RT	ES	PAM	SI	S	1E	Y(1)	Y(5)
Electrical Containment Penetration JML20GD240	JML20GF240	30UJB18F0240B	H	H	RT	ES	PAM	SI	S	1E	Y(1)	Y(5)
Electrical Containment Penetration JML20GD241	JML20GF241	30UJB18F0241B	H	H	RT	ES	PAM	SI	S	1E	Y(1)	Y(5)
Electrical Containment Penetration JML20GD242	JML20GE242	30UJB23F0242B	H	H	RT	ES	PAM	SI	S	1E	Y(1)	Y(5)
Electrical Containment Penetration JML20GD243	JML20GE243	30UJB23F0243B	H	H	RT	ES	PAM	SI	S	1E	Y(1)	Y(5)
Electrical Containment Penetration JML20GD244	JML20GE244	30UJB23F0244B	H	H	RT	ES	PAM	SI	S	1E	Y(1)	Y(5)
Electrical Containment Penetration JML20GD245	JML20GE245	30UJB23F0245B	H	H	RT	ES	PAM	SI	S	1E	Y(1)	Y(5)
Electrical Containment Penetration JML20GD246	JML20GF246	30UJB23F0246B	H	H	RT	ES	PAM	SI	S	1E	Y(1)	Y(5)
Electrical Containment Penetration JML20GD247	JML20GF247	30UJB23F0247B	H	H	RT	ES	PAM	SI	S	1E	Y(1)	Y(5)
Electrical Containment Penetration JML20GD248	JML20GF248	30UJB23F0248B	H	H	RT	ES	PAM	SI	S	1E	Y(1)	Y(5)
Electrical Containment Penetration JML20GD249	JML20GF249	30UJB23F0249B	H	H	RT	ES	PAM	SI	S	1E	Y(1)	Y(5)
Electrical Containment Penetration JML30GD330	JML30GD330	30UJB18F0330B	H	H	RT	ES	PAM	SI	S	1E	Y(1)	Y(5)
Electrical Containment Penetration JML30GD331	JML30GD331	30UJB18F0331B	H	H	RT	ES	PAM	SI	S	1E	Y(1)	Y(5)

Table 3.11-1—List of Environmentally Qualified Electrical/I&C Equipment (Sheet 128 of 130)

Name Tag (Equipment Description)	Tag Number	Local Area KKS ID (Room Location)	EQ Environment (Note 1)	Radiation Environment Zone (Note 2)	EQ Designated Function (Note 3)				Safety Class (Note 4)		EQ Program Designation (Note 5)	
Electrical Containment Penetration JML30GD332	JML30GP332	30UJB18F0332B	H	H	RT	ES	PAM	SI	S	1E	Y(1)	Y(5)
Electrical Containment Penetration JML30GD333	JML30GE333	30UJB18F0333B	H	H	RT	ES	PAM	SI	S	1E	Y(1)	Y(5)
Electrical Containment Penetration JML30GD334	JML30GE334	30UJB18F0334B	H	H	RT	ES	PAM	SI	S	1E	Y(1)	Y(5)
Electrical Containment Penetration JML30GD335	JML30GE335	30UJB18F0335B	H	H	RT	ES	PAM	SI	S	1E	Y(1)	Y(5)
Electrical Containment Penetration JML30GD336	JML30GE336	30UJB18F0336B	H	H	RT	ES	PAM	SI	S	1E	Y(1)	Y(5)
Electrical Containment Penetration JML30GD337	JML30GF337	30UJB18F0337B	H	H	RT	ES	PAM	SI	S	1E	Y(1)	Y(5)
Electrical Containment Penetration JML30GD338	JML30GE338	30UJB18F0338B	H	H	RT	ES	PAM	SI	S	1E	Y(1)	Y(5)
Electrical Containment Penetration JML30GD339	JML30GE339	30UJB18F0339B	H	H	RT	ES	PAM	SI	S	1E	Y(1)	Y(5)
Electrical Containment Penetration JML30GD340	JML30GF340	30UJB18F0340B	H	H	RT	ES	PAM	SI	S	1E	Y(1)	Y(5)
Electrical Containment Penetration JML30GD341	JML30GF341	30UJB18F0341B	H	H	RT	ES	PAM	SI	S	1E	Y(1)	Y(5)
Electrical Containment Penetration JML30GD342	JML30GE342	30UJB23F0342B	H	H	RT	ES	PAM	SI	S	1E	Y(1)	Y(5)
Electrical Containment Penetration JML30GD343	JML30GE343	30UJB23F0343B	H	H	RT	ES	PAM	SI	S	1E	Y(1)	Y(5)
Electrical Containment Penetration JML30GD344	JML30GE344	30UJB23F0344B	H	H	RT	ES	PAM	SI	S	1E	Y(1)	Y(5)
Electrical Containment Penetration JML30GD345	JML30GE345	30UJB23F0345B	H	H	RT	ES	PAM	SI	S	1E	Y(1)	Y(5)
Electrical Containment Penetration JML30GD346	JML30GF346	30UJB23F0346B	H	H	RT	ES	PAM	SI	S	1E	Y(1)	Y(5)
Electrical Containment Penetration JML30GD347	JML30GF347	30UJB23F0347B	H	H	RT	ES	PAM	SI	S	1E	Y(1)	Y(5)
Electrical Containment Penetration JML30GD348	JML30GF348	30UJB23F0348B	H	H	RT	ES	PAM	SI	S	1E	Y(1)	Y(5)
Electrical Containment Penetration JML30GD349	JML30GF349	30UJB23F0349B	H	H	RT	ES	PAM	SI	S	1E	Y(1)	Y(5)

Table 3.11-1—List of Environmentally Qualified Electrical/I&C Equipment (Sheet 129 of 130)

Name Tag (Equipment Description)	Tag Number	Local Area KKS ID (Room Location)	EQ Environment (Note 1)	Radiation Environment Zone (Note 2)	EQ Designated Function (Note 3)				Safety Class (Note 4)		EQ Program Designation (Note 5)	
Electrical Containment Penetration JML40GD430	JML40GD430	30UJB18F0430B	H	H	RT	ES	PAM	SI	S	1E	Y(1)	Y(5)
Electrical Containment Penetration JML40GD431	JML40GD431	30UJB18F0431B	H	H	RT	ES	PAM	SI	S	1E	Y(1)	Y(5)
Electrical Containment Penetration JML40GD432	JML40GF432	30UJB18F0432B	H	H	RT	ES	PAM	SI	S	1E	Y(1)	Y(5)
Electrical Containment Penetration JML40GD433	JML40GF433	30UJB18F0433B	H	H	RT	ES	PAM	SI	S	1E	Y(1)	Y(5)
Electrical Containment Penetration JML40GD434	JML40GF434	30UJB18F0434B	H	H	RT	ES	PAM	SI	S	1E	Y(1)	Y(5)
Electrical Containment Penetration JML40GD435	JML40GF435	30UJB18F0435B	H	H	RT	ES	PAM	SI	S	1E	Y(1)	Y(5)
Electrical Containment Penetration JML40GD436	JML40GF436	30UJB18F0436B	H	H	RT	ES	PAM	SI	S	1E	Y(1)	Y(5)
Electrical Containment Penetration JML40GD437	JML40GE437	30UJB18F0437B	H	H	RT	ES	PAM	SI	S	1E	Y(1)	Y(5)
Electrical Containment Penetration JML40GD438	JML40GF438	30UJB18F0438B	H	H	RT	ES	PAM	SI	S	1E	Y(1)	Y(5)
Electrical Containment Penetration JML40GD439	JML40GF439	30UJB18F0439B	H	H	RT	ES	PAM	SI	S	1E	Y(1)	Y(5)
Electrical Containment Penetration JML40GD440	JML40GF440	30UJB18F0440B	H	H	RT	ES	PAM	SI	S	1E	Y(1)	Y(5)
Electrical Containment Penetration JML40GD441	JML40GE441	30UJB18F0441B	H	H	RT	ES	PAM	SI	S	1E	Y(1)	Y(5)
Electrical Containment Penetration JML40GD442	JML40GE442	30UJB15F0442B	H	H	RT	ES	PAM	SI	S	1E	Y(1)	Y(5)
Electrical Containment Penetration JML40GD443	JML40GE443	30UJB15F0443B	H	H	RT	ES	PAM	SI	S	1E	Y(1)	Y(5)
Electrical Containment Penetration JML40GD444	JML40GE444	30UJB15F0444B	H	H	RT	ES	PAM	SI	S	1E	Y(1)	Y(5)
Electrical Containment Penetration JML40GD445	JML40GE445	30UJB15F0445B	H	H	RT	ES	PAM	SI	S	1E	Y(1)	Y(5)
Electrical Containment Penetration JML40GD446	JML40GE446	30UJB15F0446B	H	H	RT	ES	PAM	SI	S	1E	Y(1)	Y(5)
Electrical Containment Penetration JML40GD447	JML40GE447	30UJB18F0447B	H	H	RT	ES	PAM	SI	S	1E	Y(1)	Y(5)

Table 3.11-1—List of Environmentally Qualified Electrical/I&C Equipment (Sheet 130 of 130)

Name Tag (Equipment Description)	Tag Number	Local Area KKS ID (Room Location)	EQ Environment (Note 1)	Radiation Environment Zone (Note 2)	EQ Designated Function (Note 3)	Safety Class (Note 4)	EQ Program Designation (Note 5)
Electrical Containment Penetration JML40GD448	JML40GP448	30UJB18F0448B	H	H	RT ES PAM SI	S 1E	Y(1) Y(5)
For a List of Components Requiring Seismic Qualification see Table 3.10-1							

NOTES

1. EQ Environment: M (Mild), H (Harsh)
2. Radiation Environment Zone: M (Mild), H (Harsh)
3. EQ Designated Function: RT (Reactor Trip), ES (Engineered Safeguards), PAM (Post Accident Monitoring), SI (Seismic I), SII (Seismic II)
4. Safety Class: S (Safety Related), NS-AQ (Supplemental Grade Non-Safety), 1E (Class 1E), EMC (Electromagnetic Compatibility), C/NM (Consumables/Non Metallics)
5. EQ Program Designation: Yes (1) = Full EQ Electrical, Yes (2) = EQ Radiation Harsh-Electrical, Yes (3) = EQ Radiation Harsh-Consumables, Yes (4) = EQ for Consumables, Yes (5) = EQ Seismic, Yes (6) = EQ EMC.

Next File

Table 6.2.4-1—Containment Penetration, Isolation Valve, and Actuator Data
Sheet 1 of 22

Penetra-tion No.	GDC Req.	System Name	Fluid	Line Size (in)	Essent System	Potent Bypass Path	Valve Number	Valve Location	LLRT	Valve Type and Operator	Primary Act-uation	Secon-dary Act-uation	Normal Position	Shut-down Position	Post Accident Position	Power Failure Position	Cont. Isolation Signal	Valve Closure Time	Power Source
12BQ017	56	FPCPS	water	6.0	no	no	FAL15 AA003	inside	C	swing check	self	self	o/c	o/c	close	n/a	n/a	n/a	n/a
12BQ016	56	FPCPS	water	6.0	no	no	FAL12 AA001	inside	C	gate / MOV	PS	RM	o/c	o/c	close	as-is	stage 1	≤ 30 sec	34BRA
12BQ017	56	FPCPS	water	6.0	no	no	FAL15 AA002	outside	C	gate / MOV	PS	RM	o/c	o/c	close	as-is	stage 1	≤ 30 sec	31BNB03
12BQ016	56	FPCPS	water	6.0	no	no	FAL12 AA002	outside	C	gate / MOV	PS	RM	o/c	o/c	close	as-is	stage 1	≤ 30 sec	31BNB03
60BQ042	56	FHS (Transfer Tube)	air/water	20.0	no	no	n/a	n/a	B	n/a	n/a	n/a	n/a	n/a	n/a	n/a	n/a	n/a	n/a
74BQ034	57	DWDS	water	2.0	no	no	GHC74 AA002	inside	C	globe/ MOV	PS	RM	open	open	close	as-is	stage 1	≤ 15 sec	34BRA
74BQ034	57	DWDS	water	2.0	no	no	GHC74 AA001	outside	C	globe/ MOV	PS	RM	open	open	close	as-is	stage 1	≤ 15 sec	31BNB03
10BQ021	55	EBS loop 1&2	water	2.0	yes	no	JDH10 AA007	inside	C	lift check	self	self	close	close	open	n/a	n/a	n/a	n/a
40BQ022	55	EBS loop 3&4	water	2.0	yes	no	JDH40 AA007	inside	C	lift check	self	self	close	close	open	n/a	n/a	n/a	n/a
10BQ021	55	EBS loop 1&2	water	2.0	yes	no	JDH10 AA006	outside	C	globe/ MOV	PS	RM	open	open	open	as-is	stage 1	≤ 15 sec	31BNB03
40BQ022	55	EBS loop 3&4	water	2.0	yes	no	JDH40 AA006	outside	C	globe/ MOV	PS	RM	open	open	open	as-is	stage 1	≤ 15 sec	34BNB03
10BQ001	55	CVCS Seal return	water	2.0	yes	no	JEW50 AA001	inside	C	globe/ MOV	PS	RM	open	close	o/c	as-is	stage 2	≤ 15 sec	34BRA
10BQ004	55	CVCS Seal injection	water	2.0	yes	no	JEW01 AA006	inside	C	lift check	self	self	open	close	o/c	n/a	n/a	n/a	n/a
10BQ001	55	CVCS Seal return	water	2.0	yes	no	JEW50 AA002	outside	C	globe/ MOV	PS	RM	open	close	o/c	as-is	stage 2	≤ 15 sec	31BNB03

Table 6.2.4-1—Containment Penetration, Isolation Valve, and Actuator Data
Sheet 2 of 22

Penetration No.	GDC Req.	System Name	Fluid	Line Size (in)	Essent System	Potent Bypass Path	Valve Number	Valve Location	LLRT	Valve Type and Operator	Primary Actuation	Secondary Actuation	Normal Position	Shutdown Position	Post Accident Position	Power Failure Position	Cont. Isolation Signal	Valve Closure Time	Power Source
10BQ004	55	CVCS Seal injection	water	2.0	yes	no	JEW01 AA005	outside	C	globe/ MOV	PS	RM	open	close	o/c	as-is	stage 2	≤ 15 sec	31BNB03
60BQ054	56	Equip. Hatch	air	n/a	n/a	n/a	n/a	n/a	B	n/a	n/a	n/a	n/a	n/a	n/a	n/a	n/a	n/a	n/a
BQ211	56	Personnel airlock	air	n/a	n/a	n/a	n/a	n/a	B	n/a	n/a	n/a	n/a	n/a	n/a	n/a	n/a	n/a	n/a
BQ053	56	Emer. airlock	air	n/a	n/a	n/a	n/a	n/a	B	n/a	n/a	n/a	n/a	n/a	n/a	n/a	n/a	n/a	n/a
BQ052	56	Const. Opening	air	n/a	n/a	n/a	n/a	n/a	no	n/a	n/a	n/a	n/a	n/a	n/a	n/a	n/a	n/a	n/a
10BQ048	56	Leak Off System	air	10.0	no	no	JMM10 AA006	inside	C	gate/ MOV	PS	RM	close	o/c	close	as-is	stage 1	≤ 50 sec	34BRA
10BQ048	56	Leak Off System	air	10.0	no	no	JMM10 AA007	outside	C	gate/ MOV	PS	RM	close	o/c	close	as-is	stage 1	≤ 50 sec	31BNB03
30BQ312	56	Leak Off System	air	0.5	no	no	JMM30 AA001	inside	C	globe/ manual	n/a	n/a	close	o/c	close	n/a	n/a	n/a	n/a
30BQ312	56	Leak Off System	air	0.5	no	no	JMM30 AA003	outside	C	globe/ manual	n/a	n/a	close	o/c	close	n/a	n/a	n/a	n/a
23BQ065	57	Leak Off System	air	2.0	yes	no	JMM23 AA001	inside	C	globe/ MOV	RM	RM	open	o/c	open	as-is	no	≤ 15 sec	31BRA
23BQ065	57	Leak Off System	air	2.0	yes	no	JMM23 AA002	outside	C	globe/ MOV	RM	RM	open	o/c	open	as-is	no	≤ 15 sec	34BRA
41BQ104	56	SAHRS Spray line	water	8.0	no	no	JMQ41 AA002	inside	C	swing check	self	self	close	close	o/c	n/a	n/a	n/a	n/a
41BQ104	56	SAHRS Spray line	water	8.0	no	no	JMQ41 AA001	outside	C	globe/ MOV	PS	RM	close	close	o/c	as-is	stage 1	≤ 40 sec	34BNB03
42BQ105	56	SAHRS Basemat cooling line	water	8.0	no	no	JMQ42 AA002	inside	C	swing check	self	self	close	close	o/c	n/a	n/a	n/a	n/a
42BQ105	56	SAHRS Basemat cooling line	water	8.0	no	no	JMQ42 AA001	outside	C	globe/ MOV	PS	RM	close	close	o/c	as-is	stage 1	≤ 40 sec	34BNB03

Table 6.2.4-1—Containment Penetration, Isolation Valve, and Actuator Data
Sheet 3 of 22

Penetra-tion No.	GDC Req.	System Name	Fluid	Line Size (in)	Essent System	Potent Bypass Path	Valve Number	Valve Location	LLRT	Valve Type and Operator	Primary Act-uation	Secon-dary Act-uation	Normal Position	Shut-down Position	Post Accident Position	Power Failure Position	Cont. Isolation Signal	Valve Closure Time	Power Source
43BQ116	56	SAHRS Screen flushing line	water	4.0	no	no	JMQ43 AA002	inside	C	swing check	self	self	close	close	o/c	n/a	n/a	n/a	n/a
43BQ116	56	SAHRS Screen flushing line	water	4.0	no	no	JMQ43 AA001	outside	C	globe/ MOV	PS	RM	open	close	o/c	as-is	stage 1	≤ 20 sec	34BNB03
50BQ150	56	HMS Anal 1	gas	0.125	no	no	JMU50 AA075	inside	C	globe/ SOV	PS	RM	close	close	o/c	close	stage 1	≤ 15 sec	33BNB03
50BQ150	56	HMS Anal 1	gas	0.125	no	no	JMU50 AA077	inside	C	globe/ SOV	PS	RM	close	close	o/c	close	stage 1	≤ 15 sec	33BNB03
50BQ150	56	HMS Anal 1	gas	0.125	no	no	JMU50 AA079	inside	C	globe/ SOV	PS	RM	close	close	o/c	close	stage 1	≤ 15 sec	33BNB03
50BQ150	56	HMS Anal 1	gas	0.125	no	no	JMU50 AA081	inside	C	globe/ SOV	PS	RM	close	close	o/c	close	stage 1	≤ 15 sec	33BNB03
50BQ150	56	HMS Anal 1	gas	0.125	no	no	JMU50 AA076	outside	C	globe/ SOV	PS	RM	close	close	o/c	close	stage 1	≤ 15 sec	34BNB03
50BQ150	56	HMS Anal 1	gas	0.125	no	no	JMU50 AA078	outside	C	globe/ SOV	PS	RM	close	close	o/c	close	stage 1	≤ 15 sec	34BNB03
50BQ150	56	HMS Anal 1	gas	0.125	no	no	JMU50 AA080	outside	C	globe/ SOV	PS	o/c	o/c	o/c	o/c	close	stage 1	≤ 15 sec	34BNB03
50BQ150	56	HMS Anal 1	gas	0.125	no	no	JMU50 AA082	outside	C	globe/ SOV	PS	RM	close	close	o/c	close	stage 1	≤ 15 sec	34BNB03
50BQ150	56	HMS Anal 1 return	gas	0.125	no	no	JMU50 AA083	outside	C	globe/ SOV	PS	RM	close	close	o/c	close	stage 1	≤ 15 sec	34BNB03
50BQ150	56	HMS Anal 1 return	gas	0.125	no	no	JMU50 AA084	inside	C	globe/ SOV	PS	RM	close	close	o/c	close	stage 1	≤ 15 sec	33BNB03
50BQ451	56	HMS Anal 2	gas	0.125	no	no	JMU51 AA085	inside	C	globe/ SOV	PS	RM	close	close	o/c	close	stage 1	≤ 15 sec	32BNB03
50BQ451	56	HMS Anal 2	gas	0.125	no	no	JMU51 AA087	inside	C	globe/ SOV	PS	RM	close	close	o/c	close	stage 1	≤ 15 sec	32BNB03
50BQ451	56	HMS Anal 2	gas	0.125	no	no	JMU51 AA089	inside	C	globe/ SOV	PS	RM	close	close	o/c	close	stage 1	≤ 15 sec	32BNB03

Table 6.2.4-1—Containment Penetration, Isolation Valve, and Actuator Data
Sheet 4 of 22

Penetra-tion No.	GDC Req.	System Name	Fluid	Line Size (in)	Essent System	Potent Bypass Path	Valve Number	Valve Location	LLRT	Valve Type and Operator	Primary Act-uation	Secon-dary Act-uation	Normal Position	Shut-down Position	Post Accident Position	Power Failure Position	Cont. Isolation Signal	Valve Closure Time	Power Source
50BQ451	56	HMS Anal 2	gas	0.125	no	no	JMU51 AA091	inside	C	globe/ SOV	PS	RM	close	close	o/c	close	stage 1	≤ 15 sec	32BNB03
50BQ451	56	HMS Anal 2	gas	0.125	no	no	JMU51 AA086	outside	C	globe/ SOV	PS	RM	close	close	o/c	close	stage 1	≤ 15 sec	31BNB03
50BQ451	56	HMS Anal 2	gas	0.125	no	no	JMU51 AA088	outside	C	globe/ SOV	PS	RM	close	close	o/c	close	stage 1	≤ 15 sec	31BNB03
50BQ451	56	HMS Anal 2	gas	0.125	no	no	JMU51 AA090	outside	C	globe/ SOV	PS	RM	close	close	o/c	close	stage 1	≤ 15 sec	31BNB03
50BQ451	56	HMS Anal 2	gas	0.125	no	no	JMU51 AA092	outside	C	globe/ SOV	PS	RM	close	close	o/c	close	stage 1	≤ 15 sec	31BNB03
50BQ451	56	HMS Anal 2 return	gas	0.125	no	no	JMU51 AA093	outside	C	globe/ SOV	PS	RM	close	close	o/c	close	stage 1	≤ 15 sec	31BNB03
50BQ451	56	HMS Anal 2 return	gas	0.125	no	no	JMU51 AA094	inside	C	globe/ SOV	PS	RM	close	close	o/c	close	stage 1	≤ 15 sec	32BNB03
10BQ103	55	LHSI/ RHR Train 1	water	10.0	yes	no	JNA10 AA002	inside	C	globe/ MOV	PS	RM	close	open	o/c	as-is	no	≤ 50 sec	32BRA
20BQ203	55	LHSI/ RHR Train 2	water	10.0	yes	no	JNA20 AA002	inside	C	globe/ MOV	PS	RM	close	open	o/c	as-is	no	≤ 50 sec	31BRA
30BQ308	55	LHSI/ RHR Train 3	water	10.0	yes	no	JNA30 AA002	inside	C	globe/ MOV	PS	RM	close	open	o/c	as-is	no	≤ 50 sec	34BRA
40BQ403	55	LHSI/ RHR Train 4	water	10.0	yes	no	JNA40 AA002	inside	C	globe/ MOV	PS	RM	close	open	o/c	as-is	no	≤ 50 sec	33BRA
10BQ103	55	LHSI/ RHR Train 1	water	1.0	yes	no	JNG15 AA004	inside	C	globe/ MOV	PS	RM	close	close	close	as-is	no	≤ 15 sec	32BRA
10BQ103	55	LHSI/ RHR Train 1	water	10.0	yes	no	JNA10 AA003	outside	C	globe/ MOV	PS	RM	close	open	o/c	as-is	no	≤ 50 sec	31BNB03
10BQ103	55	LHSI/ RHR Train 1	water	8.0	yes	no	JNG12 AA001	outside	C	globe/ MOV	PS	RM	close	close	o/c	as-is	no	≤ 40 sec	31BNB03

Table 6.2.4-1—Containment Penetration, Isolation Valve, and Actuator Data
Sheet 5 of 22

Penetra-tion No.	GDC Req.	System Name	Fluid	Line Size (in)	Essent System	Potent Bypass Path	Valve Number	Valve Location	LLRT	Valve Type and Operator	Primary Act-uation	Secon-dary Act-uation	Normal Position	Shut-down Position	Post Accident Position	Power Failure Position	Cont. Isolation Signal	Valve Closure Time	Power Source
20BQ203	55	LHSI/ RHR Train 2	water	10.0	yes	no	JNA20 AA003	outside	C	globe/ MOV	PS	RM	close	open	o/c	as-is	no	≤ 50 sec	32BNB03
20BQ203	55	LHSI/ RHR Train 2	water	1.0	yes	no	JNG25 AA004	inside	C	globe/ MOV	PS	RM	close	close	close	as-is	no	≤ 15 sec	31BRA
20BQ203	55	LHSI/ RHR Train 2	water	8.0	yes	no	JNG22 AA001	outside	C	globe/ MOV	PS	RM	close	close	o/c	as-is	no	≤ 40 sec	32BNB03
30BQ308	55	LHSI/ RHR Train 3	water	10.0	yes	no	JNA30 AA003	outside	C	globe/ MOV	PS	RM	close	open	o/c	as-is	no	≤ 50 sec	33BNB03
30BQ308	55	LHSI/ RHR Train 3	water	1.0	yes	no	JNG35 AA004	inside	C	globe/ MOV	PS	RM	close	close	close	as-is	no	≤ 15 sec	34BRA
30BQ308	55	LHSI/ RHR Train 3	water	8.0	yes	no	JNG32 AA001	outside	C	globe/ MOV	PS	RM	close	close	o/c	as-is	no	≤ 40 sec	33BNB03
40BQ403	55	LHSI/ RHR Train 4	water	10.0	yes	no	JNA40 AA003	outside	C	globe/ MOV	PS	RM	close	open	o/c	as-is	no	≤ 50 sec	34BNB03
40BQ403	55	LHSI/ RHR Train 4	water	1.0	yes	no	JNG45 AA004	inside	C	globe/ MOV	PS	RM	close	close	close	as-is	no	≤ 15 sec	33BRA
40BQ403	55	LHSI/ RHR Train 4	water	8.0	yes	no	JNG42 AA001	outside	C	globe/ MOV	PS	RM	close	close	o/c	as-is	no	≤ 40 sec	34BNB03
10BQ102	55	MHSI Train 1	water	6.0	yes	no	JND10 AA007	inside	C	swing check	self	self	close	close	o/c	n/a	n/a	n/a	n/a
10BQ102	55	MHSI Train 1	water	6.0	yes	no	JND10 AA002	outside	C	globe/ MOV	PS	RM	open	open	o/c	as-is	no	≤ 30 sec	31BNB03
20BQ202	55	MHSI Train 2	water	6.0	yes	no	JND20 AA007	inside	C	swing check	self	self	close	close	o/c	n/a	no	n/a	n/a
20BQ202	55	MHSI Train 2	water	6.0	yes	no	JND20 AA002	outside	C	globe/ MOV	PS	RM	open	open	o/c	as-is	no	≤ 30 sec	32BNB03
30BQ302	55	MHSI Train 3	water	6.0	yes	no	JND30 AA007	inside	C	swing check	self	self	close	close	o/c	n/a	n/a	n/a	n/a

Table 6.2.4-1—Containment Penetration, Isolation Valve, and Actuator Data
Sheet 6 of 22

Penetration No.	GDC Req.	System Name	Fluid	Line Size (in)	Essent System	Potent Bypass Path	Valve Number	Valve Location	LLRT	Valve Type and Operator	Primary Actuation	Secondary Actuation	Normal Position	Shutdown Position	Post Accident Position	Power Failure Position	Cont. Isolation Signal	Valve Closure Time	Power Source
30BQ302	55	MHSI Train 3	water	6.0	yes	no	JND30 AA002	outside	C	globe/ MOV	PS	RM	open	open	o/c	as-is	no	≤ 30 sec	33BNB03
40BQ402	55	MHSI Train 4	water	6.0	yes	no	JND40 AA007	inside	C	swing check	self	self	close	close	o/c	n/a	n/a	n/a	n/a
40BQ402	55	MHSI Train 4	water	6.0	yes	no	JND40 AA002	outside	C	globe/ MOV	PS	RM	open	open	o/c	as-is	no	≤ 30 sec	34BNB03
10BQ101	55	LHSI/ RHR Train 1	water	8.0	yes	no	JNG10 AA009	inside	C	swing check	self	self	close	o/c	o/c	n/a	n/a	n/a	n/a
20BQ201	55	LHSI/ RHR Train 2	water	8.0	yes	no	JNG20 AA009	inside	C	swing check	self	self	close	o/c	o/c	n/a	n/a	n/a	n/a
30BQ301	55	LHSI/ RHR Train 3	water	8.0	yes	no	JNG30 AA009	inside	C	swing check	self	self	close	o/c	o/c	n/a	n/a	n/a	n/a
40BQ401	55	LHSI/ RHR Train 4	water	8.0	yes	no	JNG40 AA009	inside	C	swing check	self	self	close	o/c	o/c	n/a	n/a	n/a	n/a
10BQ101	55	LHSI/ RHR Train 1	water	8.0	yes	no	JNG10 AA060	outside	C	globe/ MOV	SIS	RM	open	open	o/c	as-is	n/a	≤ 40 sec	31BNB03
20BQ201	55	LHSI/ RHR Train 2	water	8.0	yes	no	JNG20 AA060	outside	C	globe/ MOV	SIS	RM	open	open	o/c	as-is	n/a	≤ 40 sec	32BNB03
30BQ301	55	LHSI/ RHR Train 3	water	8.0	yes	no	JNG30 AA060	outside	C	globe/ MOV	SIS	RM	open	open	o/c	as-is	n/a	≤ 40 sec	33BNB03
40BQ401	55	LHSI/ RHR Train 4	water	8.0	yes	no	JNG40 AA060	outside	C	globe/ MOV	SIS	RM	open	open	o/c	as-is	n/a	≤ 40 sec	34BNB03
10BQ101	55	LHSI/ RHR Bypass Train 1	water	4.0	yes	no	JNG10 AA061	outside	C	globe/ MOV	SIS	RM	open	open	o/c	as-is	n/a	≤ 20 sec	31BNB03
20BQ201	55	LHSI/ RHR Bypass Train 2	water	4.0	yes	no	JNG20 AA061	outside	C	globe/ MOV	SIS	RM	open	open	o/c	as-is	n/a	≤ 20 sec	32BNB03

Table 6.2.4-1—Containment Penetration, Isolation Valve, and Actuator Data
Sheet 7 of 22

Penetra-tion No.	GDC Req.	System Name	Fluid	Line Size (in)	Essent System	Potent Bypass Path	Valve Number	Valve Location	LLRT	Valve Type and Operator	Primary Act-uation	Secon-dary Act-uation	Normal Position	Shut-down Position	Post Accident Position	Power Failure Position	Cont. Isolation Signal	Valve Closure Time	Power Source
30BQ301	55	LHSI/ RHR Bypass Train 3	water	4.0	yes	no	JNG30 AA061	outside	C	globe/ MOV	SIS	RM	open	open	o/c	as-is	n/a	≤ 20 sec	33BNB03
40BQ401	55	LHSI/ RHR Bypass Train 4	water	4.0	yes	no	JNG40 AA061	outside	C	globe/ MOV	SIS	RM	open	open	o/c	as-is	n/a	≤ 20 sec	34BNB03
60BQ100	56	IRWST Sump Train1	water	16.0	yes	no	guard pipe buried	n/a	no	n/a	n/a	n/a	n/a	n/a	n/a	n/a	n/a	n/a	n/a
60BQ100	56	IRWST Sump Train1	water	16.0	yes	no	JNK10 AA001	outside	C	globe/ MOV	RM	RM	open	open	open	as-is	n/a	≤ 60 sec	31BNB03
60BQ105	56	IRWST Sump to CVCS/ FPCPS	water	6.0	yes	no	guard pipe buried	n/a	no	n/a	n/a	n/a	n/a	n/a	n/a	n/a	n/a	n/a	n/a
60BQ105	56	IRWST Sump to CVCS/ FPCPS	water	6.0	yes	no	JNK10 AA009	outside	C	globe/ MOV	PS	RM	close	o/c	close	as-is	stage 1	≤ 30 sec	31BNB03
60BQ105	56	IRWST Sump to CVCS/ FPCPS	water	6.0	yes	no	JNK10 AA013	outside	C	globe/ MOV	PS	RM	close	o/c	close	as-is	stage 1	≤ 30 sec	34BNB03
60BQ200	56	IRWST Sump SIS Train 2	water	16.0	yes	no	guard pipe buried	n/a	no	n/a	n/a	n/a	n/a	n/a	n/a	n/a	n/a	n/a	n/a
60BQ200	56	IRWST Sump SIS Train 2	water	16.0	yes	no	JNK20 AA001	outside	C	globe/ MOV	RM	RM	open	open	open	as-is	n/a	≤ 60 sec	32BNB03
60BQ300	56	IRWST Sump SIS Train 3	water	16.0	yes	no	guard pipe buried	n/a	no	n/a	n/a	n/a	n/a	n/a	n/a	n/a	n/a	n/a	n/a
60BQ300	56	IRWST Sump SIS Train 3	water	16.0	yes	no	JNK30 AA001	outside	C	globe/ MOV	RM	RM	open	open	open	as-is	n/a	≤ 60 sec	33BNB03

Table 6.2.4-1—Containment Penetration, Isolation Valve, and Actuator Data
Sheet 8 of 22

Penetra-tion No.	GDC Req.	System Name	Fluid	Line Size (in)	Essent System	Potent Bypass Path	Valve Number	Valve Location	LLRT	Valve Type and Operator	Primary Act-uation	Secon-dary Act-uation	Normal Position	Shut-down Position	Post Accident Position	Power Failure Position	Cont. Isolation Signal	Valve Closure Time	Power Source
60BQ400	56	IRWST Sump SIS Train 4	water	16.0	yes	no	guard pipe buried	n/a	no	n/a	n/a	n/a	n/a	n/a	n/a	n/a	n/a	n/a	n/a
60BQ400	56	IRWST Sump SIS Train 4	water	16.0	yes	no	JNK40 AA001	outside	C	globe/ MOV	RM	RM	open	open	open	as-is	n/a	≤ 60 sec	34BNB03
60BQ405	56	IRWST Sump SAHRS	water	14.0	yes	no	guard pipe buried	n/a	no	n/a	n/a	n/a	n/a	n/a	n/a	n/a	n/a	n/a	n/a
60BQ405	56	IRWST Sump SAHRS	water	14.0	yes	no	JNK11 AA009	outside	C	globe/ MOV	PS	RM	o/c	close	close	as-is	stage 2	≤ 60 sec	34BNB03
60BQ405	56	IRWST Sump SAHRS	water	14.0	no	no	JMQ40 AA001	outside	C	globe/ MOV	PS	RM	close	o/c	close	as-is	stage 2	≤ 60 sec	31BNB03
60BQ107	57	CCWS & CVCS to RCP	water	12.0	no	no	KAB60 AA014	inside	C	swing check	self	self	open	o/c	close	n/a	n/a	n/a	n/a
60BQ107	57	CCWS & CVCS to RCP	water	12.0	no	no	KAB60 AA013	outside	C	gate/ MOV	PS	RM	open	o/c	close	as-is	stage 2	≤ 60 sec	31BNB03
60BQ108	57	CCWS & CVCS to RCP	water	12.0	no	no	KAB60 AA018	inside	C	gate/ MOV	PS	RM	open	o/c	close	as-is	stage 2	≤ 60 sec	34BRA
60BQ108	57	CCWS & CVCS to RCP	water	12.0	no	no	KAB60 AA019	outside	C	gate/ MOV	PS	RM	open	o/c	close	as-is	stage 2	≤ 60 sec	31BNB03
60BQ113	57	CCWS to HVAC & PEH	water	10.0	no	no	KAB40 AA002	inside	C	swing check	self	self	open	o/c	close	n/a	n/a	n/a	n/a
60BQ113	57	CCWS to HVAC & PEH	water	10.0	no	no	KAB40 AA001	outside	C	gate/ MOV	PS	RM	open	o/c	close	as-is	stage 1	≤ 50 sec	31BNB03
60BQ114	57	CCWS return HVAC & PEH	water	10.0	no	no	KAB40 AA012	inside	C	gate/ MOV	PS	RM	open	o/c	close	as-is	stage 1	≤ 50 sec	34BRA

Table 6.2.4-1—Containment Penetration, Isolation Valve, and Actuator Data
Sheet 9 of 22

Penetra-tion No.	GDC Req.	System Name	Fluid	Line Size (in)	Essent System	Potent Bypass Path	Valve Number	Valve Location	LLRT	Valve Type and Operator	Primary Act-uation	Secon-dary Act-uation	Normal Position	Shut-down Position	Post Accident Position	Power Failure Position	Cont. Isolation Signal	Valve Closure Time	Power Source
60BQ114	57	CCWS return HVAC & PEH	water	10.0	no	no	KAB40 AA006	outside	C	gate/ MOV	PS	RM	open	o/c	close	as-is	stage 1	≤ 50 sec	31BNB03
60BQ117	57	CCWS supply to RCP	water	4.0	yes	no	KAB30 AA050	inside	C	~~swing check~~gate/ MOV	~~self~~RM	~~self~~RM	open	open	open	~~n/a~~as-is	~~n/a~~no	~~n/a~~≤ 15 sec	~~n/a~~34BRA
60BQ117	57	CCWS supply to RCP	water	4.0	yes	no	KAB30 AA049	outside	C	gate/ MOV	RM	RM	open	open	open	as-is	no	≤ 15 sec	31BNB03
60BQ118	57	CCWS return RCP	water	4.0	yes	no	KAB30 AA052	outside	C	gate/ MOV	RM	RM	open	open	open	as-is	no	≤ 15 sec	31BNB03
60BQ118	57	CCWS return RCP	water	4.0	yes	no	KAB30 AA051	inside	C	gate/ MOV	RM	RM	open	open	open	as-is	no	≤ 15 sec	34BRA
60BQ407	57	CCWS & CVCS to RCP	water	12.0	no	no	KAB70 AA014	inside	C	swing check	self	self	open	o/c	close	n/a	n/a	n/a	n/a
60BQ407	57	CCWS & CVCS to RCP	water	12.0	no	no	KAB70 AA013	outside	C	gate/ MOV	PS	RM	open	o/c	close	as-is	stage 2	≤ 60 sec	34BNB03
60BQ408	57	CCWS & CVCS return RCP	water	12.0	no	no	KAB70 AA018	inside	C	gate/ MOV	PS	RM	open	o/c	close	as-is	stage 2	≤ 60 sec	31BRA
60BQ408	57	CCWS & CVCS return RCP	water	12.0	no	no	KAB70 AA019	outside	C	gate/ MOV	PS	RM	open	o/c	close	as-is	stage 2	≤ 60 sec	34BNB03
60BQ420	57	CCWS supply to RCP	water	4.0	yes	no	KAB30 AA054	inside	C	~~swing check~~gate/ MOV	~~self~~RM	~~self~~RM	open	open	open	~~n/a~~as-is	~~n/a~~no	~~n/a~~≤ 15 sec	~~n/a~~31BRA
60BQ420	57	CCWS supply to RCP	water	4.0	yes	no	KAB30 AA053	outside	C	gate/ MOV	RM	RM	open	open	open	as-is	no	≤ 15 sec	34BNB03
60BQ421	57	CCWS return RCP	water	4.0	yes	no	KAB30 AA055	inside	C	gate/ MOV	RM	RM	open	open	open	as-is	no	≤ 15 sec	31BRA

Table 6.2.4-1—Containment Penetration, Isolation Valve, and Actuator Data
Sheet 10 of 22

Penetration No.	GDC Req.	System Name	Fluid	Line Size (in)	Essent System	Potent Bypass Path	Valve Number	Valve Location	LLRT	Valve Type and Operator	Primary Actuation	Secondary Actuation	Normal Position	Shutdown Position	Post Accident Position	Power Failure Position	Cont. Isolation Signal	Valve Closure Time	Power Source
60BQ421	57	CCWS return RCP	water	4.0	yes	no	KAB30 AA056	outside	C	gate/ MOV	RM	RM	open	open	open	as-is	no	≤ 15 sec	34BNB03
10BQ002	55	CVCS Charging	water	4.0	no	no	KBA34 AA003	inside	C	swing check	self	self	open	close	close	n/a	n/a	n/a	n/a
10BQ002	55	CVCS Charging	water	4.0	no	no	KBA34 AA002	outside	C	globe/ MOV	PS	RM	open	close	close	as-is	stage 2	≤ 20 sec	31BNB03
10BQ003	55	CVCS Letdown	water	6.0	no	no	KBA14 AA002	inside	C	globe/ MOV	PS	RM	open	close	close	as-is	stage 1	≤ 30 sec	31BRA
10BQ003	55	CVCS Letdown	water	6.0	no	no	KBA14 AA003	outside	C	globe/ MOV	PS	RM	open	close	close	as-is	stage 1	≤ 30 sec	34BNB03
30BQ044	56	CVS supply	air	39.0	no	no	KLA30 AA003	inside	C	special/air	PS	RM	close	o/c	close	close	stage 1	n/a	n/a
30BQ044	56	CVS supply	air	39.0	no	no	KLA30 AA002	outside	C	special/air	PS	RM	close	o/c	close	close	stage 1	n/a	n/a
40BQ045	56	CVS exhaust	air	39.0	no	no	KLA40 AA001	inside	C	special/air	PS	RM	close	o/c	close	close	stage 1	n/a	n/a
40BQ045	56	CVS exhaust	air	39.0	no	no	KLA40 AA002	outside	C	special/air	PS	RM	close	o/c	close	close	stage 1	n/a	n/a
20BQ046	56	CVS exhaust	air	20.0	no	no	KLA20 AA001	inside	C	special/air	PS	RM	o/c	o/c	close	close	stage 1	≤ 5 sec	n/a
20BQ046	56	CVS exhaust	air	20.0	no	no	KLA20 AA003	outside	C	special/air	PS	RM	o/c	o/c	close	close	stage 1	≤ 5 sec	n/a
10BQ047	56	CVS supply	air	20.0	no	no	KLA10 AA003	inside	C	special/air	PS	RM	o/c	o/c	close	close	stage 1	≤ 5 sec	n/a
10BQ047	56	CVS supply	air	20.0	no	no	KLA10 AA001	outside	C	special/air	PS	RM	o/c	o/c	close	close	stage 1	≤ 5 sec	n/a
60BQ250	56	CEC pressure	air	0.5	~~no~~yes	no	KLA60 AA703	outside	C	gate/ manual	manual	manual	open	open	open	n/a	n/a	n/a	n/a
60BQ250	56	CSC pressure	air	0.5	~~no~~yes	no	KLA70 AA706	outside	C	gate/ manual	manual	manual	open	open	open	n/a	n/a	n/a	n/a
60BQ250	56	CSC pressure	air	0.5	~~no~~yes	no	KLA70 AA707	outside	C	gate/ manual	manual	manual	open	open	open	n/a	n/a	n/a	n/a

Table 6.2.4-1—Containment Penetration, Isolation Valve, and Actuator Data
Sheet 11 of 22

Penetra-tion No.	GDC Req.	System Name	Fluid	Line Size (in)	Essent System	Potent Bypass Path	Valve Number	Valve Location	LLRT	Valve Type and Operator	Primary Act-uation	Secon-dary Act-uation	Normal Position	Shut-down Position	Post Accident Position	Power Failure Position	Cont. Isolation Signal	Valve Closure Time	Power Source
60BQ350	56	CEC pressure	air	0.5	~~no~~yes	no	KLA60 AA701	outside	C	gate/ manual	manual	manual	open	open	open	n/a	n/a	n/a	n/a
60BQ350	56	CSC pressure	air	0.5	~~no~~yes	no	KLA70 AA701	outside	C	gate/ manual	manual	manual	open	open	open	n/a	n/a	n/a	n/a
60BQ350	56	CSC pressure	air	0.5	~~no~~yes	no	KLA70 AA702	outside	C	gate/ manual	manual	manual	open	open	open	n/a	n/a	n/a	n/a
60BQ151	56	CEC pressure	air	0.5	~~no~~yes	no	KLA60 AA704	outside	C	gate/ manual	manual	manual	open	open	open	n/a	n/a	n/a	n/a
60BQ151	56	CSC pressure	air	0.5	~~no~~yes	no	KLA70 AA708	outside	C	gate/ manual	manual	manual	open	open	open	n/a	n/a	n/a	n/a
60BQ151	56	CSC pressure	air	0.5	~~no~~yes	no	KLA70 AA709	outside	C	gate/ manual	manual	manual	open	open	open	n/a	n/a	n/a	n/a
60BQ452	56	CEC pressure	air	0.5	~~no~~yes	no	KLA60 AA702	outside	C	gate/ manual	manual	manual	open	open	open	n/a	n/a	n/a	n/a
60BQ452	56	CSC pressure	air	0.5	~~no~~yes	no	KLA70 AA703	outside	C	gate/ manual	manual	manual	open	open	open	n/a	n/a	n/a	n/a
60BQ452	56	CSC pressure	air	0.5	~~no~~yes	no	KLA70 AA704	outside	C	gate/ manual	manual	manual	open	open	open	n/a	n/a	n/a	n/a
60BQ005	55	GWPS	gas	2.0	no	no	KPL84 AA003	inside	C	globe/ MOV	PS	RM	open	o/c	close	as-is	stage 1	≤ 15 sec	31BRA
60BQ005	55	GWPS	gas	2.0	no	no	KPL84 AA002	outside	C	globe/ MOV	PS	RM	open	o/c	close	as-is	stage 1	≤ 15 sec	34BNB03
60BQ006	55	GWPS	gas	2.0	no	no	KPL85 AA003	inside	C	globe/ MOV	PS	RM	open	o/c	close	as-is	stage 1	≤ 15 sec	31BRA
60BQ006	55	GWPS	gas	2.0	no	no	KPL85 AA004	outside	C	globe/ MOV	PS	RM	open	o/c	close	as-is	stage 1	≤ 15 sec	34BNB03
10BQ007	57	NIDVS	water	3.0	no	no	KTA10 AA017	inside	C	globe/ MOV	PS	RM	open	open	close	as-is	stage 1	≤ 15 sec	34BRA
10BQ007	57	NIDVS	water	3.0	no	no	KTA10 AA018	outside	C	globe/ MOV	PS	RM	open	open	close	as-is	stage 1	≤ 15 sec	31BNB03
10BQ008	56	NIDVS	water	2.0	no	no	KTC10 AA005	inside	C	globe/ MOV	PS	RM	close	o/c	close	as-is	stage 1	≤ 15 sec	31BRA

Table 6.2.4-1—Containment Penetration, Isolation Valve, and Actuator Data
Sheet 12 of 22

Penetra-tion No.	GDC Req.	System Name	Fluid	Line Size (in)	Essent System	Potent Bypass Path	Valve Number	Valve Location	LLRT	Valve Type and Operator	Primary Act-uation	Secon-dary Act-uation	Normal Position	Shut-down Position	Post Accident Position	Power Failure Position	Cont. Isolation Signal	Valve Closure Time	Power Source
10BQ008	56	NIDVS	water	2.0	no	no	KTC10 AA006	outside	C	globe/ MOV	PS	RM	close	o/c	close	as-is	stage 1	≤ 15 sec	34BNB03
10BQ012	56	NIDVS return	water	2.0	no	no	KTC10 AA029	inside	C	lift check	self	self	open	o/c	close	n/a	n/a	n/a	n/a
10BQ012	56	NIDV return	water	2.0	no	no	KTC10 AA010	outside	C	globe/ MOV	PS	RM	close	o/c	close	as-is	stage 1	≤ 15 sec	34BNB03
10BQ014	56	NIDVS	water	2.0	no	no	KTD10 AA024	inside	C	globe/ MOV	PS	RM	close	o/c	close	as-is	stage 1	≤ 15 sec	31BRA
10BQ014	56	NIDVS	water	2.0	no	no	KTD10 AA015	outside	C	globe/ MOV	PS	RM	close	o/c	close	as-is	stage 1	≤ 15 sec	34BNB03
10BQ070	56	NIDVS to annulus	water	1.0	no	no	KTD10 AA008	inside annulus	C	lift check	self	self	o/c	o/c	close	n/a	n/a	n/a	n/a
10BQ070	56	NIDVS to annulus	water	1.0	no	no	KTD10 AA025	outside	C	globe/ MOV	PS	RM	close	close	close	as-is	stage 1	≤ 15 sec	34BNB03
10BQ009	55	NSS LS	water	0.25	no	no	KUA10 AA003	inside	C	globe/ MOV	PS	RM	open	open	close	as-is	stage 1	≤ 15 sec	31BRA
10BQ009	55	NSS LS	water	0.25	no	no	KUA10 AA004	outside	C	globe/ MOV	PS	RM	open	open	close	as-is	stage 1	≤ 15 sec	34BNB03
20BQ011	55	NSS LS	water	0.25	no	no	KUA20 AA002	inside	C	globe/ MOV	PS	RM	open	open	close	as-is	stage 1	≤ 15 sec	31BRA
20BQ011	55	NSS LS	water	0.25	no	no	KUA20 AA003	outside	C	globe/ MOV	PS	RM	open	open	close	as-is	stage 1	≤ 15 sec	34BNB03
30BQ010	55	NSS LS	water	0.25	no	no	KUA30 AA003	inside	C	globe/ MOV	PS	RM	open	open	close	as-is	stage 1	≤ 15 sec	34BRA
30BQ010	55	NSS LS	water	0.25	no	no	KUA30 AA004	outside	C	globe/ MOV	PS	RM	open	open	close	as-is	stage 1	≤ 15 sec	31BNB03
10BQ027	55	NSS LLLS	water	0.25	no	no	KUB10 AA001	inside	C	globe/ MOV	PS	RM	close	o/c	close	as-is	stage 1	≤ 15 sec	31BRA
10BQ027	55	NSS LLLS	water	0.25	no	no	KUB10 AA002	outside	C	globe/ MOV	PS	RM	close	o/c	close	as-is	stage 1	≤ 15 sec	34BNB03
51BQ449	56	SASS	air	0.375	no	no	KUL51 AA002	outside	C	ball/MOV	PS	RM	close	close	close	as-is	stage 1	≤ 15 sec	31BNB03

Table 6.2.4-1—Containment Penetration, Isolation Valve, and Actuator Data
Sheet 13 of 22

Penetra-tion No.	GDC Req.	System Name	Fluid	Line Size (in)	Essent System	Potent Bypass Path	Valve Number	Valve Location	LLRT	Valve Type and Operator	Primary Act-uation	Secon-dary Act-uation	Normal Position	Shut-down Position	Post Accident Position	Power Failure Position	Cont. Isolation Signal	Valve Closure Time	Power Source
51BQ449	56	SASS	air	0.375	no	no	KUL51 AA003	outside	C	ball/MOV	PS	RM	close	close	close	as-is	stage 1	≤ 15 sec	34BNB03
52BQ450	56	SASS	air	0.375	no	no	KUL52 AA002	outside	C	ball/MOV	PS	RM	close	close	close	as-is	stage 1	≤ 15 sec	31BNB03
52BQ450	56	SASS	air	0.375	no	no	KUL52 AA003	outside	C	ball/MOV	PS	RM	close	close	close	as-is	stage 1	≤ 15 sec	34BNB03
60BQ109	57	FW to SG1	water	20.0	no	no	LAB60 AA002	outside	no	gate/ MOV	RM	RM	open	o/c	close	as-is	no	≤60 sec	31BNB02
60BQ109	57	FW to SG1	water	20.0	no	no	LAB60 AA003	inside	no	lift check	self	self	open	o/c	close	n/a	n/a	n/a	n/a
70BQ207	57	FW to SG2	water	20.0	no	no	LAB70 AA002	outside	no	gate/ MOV	RM	RM	open	o/c	close	as-is	no	≤60 sec	32BNB02
70BQ207	57	FW to SG2	water	20.0	no	no	LAB70 AA003	inside	no	lift check	self	self	open	o/c	close	n/a	n/a	n/a	n/a
80BQ306	57	FW to SG3	water	20.0	no	no	LAB80 AA002	outside	no	gate/ MOV	RM	RM	open	o/c	close	as-is	no	≤ 60 sec	33BNB02
80BQ306	57	FW to SG3	water	20.0	no	no	LAB80 AA003	inside	no	lift check	self	self	open	o/c	close	n/a	n/a	n/a	n/a
90BQ409	57	FW to SG4	water	20.0	no	no	LAB90 AA002	outside	no	gate/ MOV	RM	RM	open	o/c	close	as-is	no	≤ 60 sec	34BNB02
90BQ409	57	FW to SG4	water	20.0	no	no	LAB90 AA003	inside	no	lift check	self	self	open	o/c	close	n/a	n/a	n/a	n/a
11BQ106	57	EFWS to SG 1	water	4.0	yes	no	LAR11 AA006	outside	no	gate/ MOV	RM	RM	open	open	open	as-is	no	≤ 20 sec	31BRA
11BQ106	57	EFWS to SG 1	water	4.0	yes	no	LAR11 AA007	inside	no	swing check	self	self	open	close	open	n/a	n/a	n/a	n/a
21BQ204	57	EFWS to SG 2	water	4.0	yes	no	LAR21 AA006	outside	no	gate/ MOV	RM	RM	open	open	open	as-is	no	≤ 20 sec	32BRA
21BQ204	57	EFWS to SG 2	water	4.0	yes	no	LAR21 AA007	inside	no	swing check	self	self	close	close	open	n/a	n/a	n/a	n/a
31BQ303	57	EFWS to SG 3	water	4.0	yes	no	LAR31 AA006	outside	no	gate/ MOV	RM	RM	open	open	open	as-is	no	≤ 20 sec	33BRA

Table 6.2.4-1—Containment Penetration, Isolation Valve, and Actuator Data
Sheet 14 of 22

Penetration No.	GDC Req.	System Name	Fluid	Line Size (in)	Essent System	Potent Bypass Path	Valve Number	Valve Location	LLRT	Valve Type and Operator	Primary Actuation	Secondary Actuation	Normal Position	Shutdown Position	Post Accident Position	Power Failure Position	Cont. Isolation Signal	Valve Closure Time	Power Source
31BQ303	57	EFWS to SG 3	water	4.0	yes	no	LAR31 AA007	inside	no	swing check	self	self	close	close	open	n/a	n/a	n/a	n/a
41BQ406	57	EFWS to SG 4	water	4.0	yes	no	LAR41 AA006	outside	no	gate/ MOV	RM	RM	open	open	open	as-is	no	≤ 20 sec	34BRA
41BQ406	57	EFWS to SG 4	water	4.0	yes	no	LAR41 AA007	inside	no	swing check	self	self	close	close	open	n/a	n/a	n/a	n/a
10BQ110	57	MS from SG1	steam	27.5	no	no	LBA10 AA002	outside	no	gate/HOV	RM	RM	open	close	o/c	close	no	n/a	n/a
10BQ110	57	MS to MSRIV	steam	14.0	no	no	LBA13 AA001	outside	no	globe/ PORV	self	self	close	close	o/c	close	no	n/a	n/a
10BQ110	57	MS to MSRCV	steam	14.0	no	no	LBA13 AA101	outside	no	globe cont /MOV	RM	RM	close	close	o/c	as-is	no	n/a	31BRA
10BQ110	57	MS to MSSV	steam	8.0	no	no	LBA11 AA191	outside	no	safety	self	self	close	close	o/c	n/a	n/a	n/a	n/a
10BQ110	57	MS to MSSV	steam	8.0	no	no	LBA12 AA191	outside	no	safety	self	self	close	close	o/c	n/a	n/a	n/a	n/a
10BQ110	57	MS warm up line	steam	6.0	no	no	LBA14 AA001	outside	no	globe/ MOV	RM	RM	close	close	close	as-is	n/a	≤ 30 sec	31BNB02
10BQ110	57	MS drain line	steam	2.0	no	no	LBA10 AA441	outside	no	globe/ MOV	RM	RM	close	close	close	as-is	n/a	≤ 15 sec	31BNB02
20BQ208	57	MS from SG 2	steam	27.5	no	no	LBA20 AA002	outside	no	gate/HOV	RM	RM	open	close	o/c	close	no	n/a	n/a
20BQ208	57	MS to MSRIV	steam	14.0	no	no	LBA23 AA001	outside	no	globe/ PORV	self	self	close	close	o/c	close	no	n/a	n/a
20BQ208	57	MS to MSRCV	steam	14.0	no	no	LBA23 AA101	outside	no	globe cont /MOV	RM	RM	close	close	o/c	as-is	no	n/a	32BRA
20BQ208	57	MS to MSSV	steam	8.0	no	no	LBA21 AA191	outside	no	safety	self	self	close	close	o/c	n/a	n/a	n/a	n/a
20BQ208	57	MS to MSSV	steam	8.0	no	no	LBA22 AA191	outside	no	safety	self	self	close	close	o/c	n/a	n/a	n/a	n/a
20BQ208	57	MS warm up line	steam	6.0	no	no	LBA24 AA001	outside	no	globe/ MOV	RM	RM	close	close	close	as-is	n/a	≤ 30 sec	32BNB02

Table 6.2.4-1—Containment Penetration, Isolation Valve, and Actuator Data
Sheet 15 of 22

Penetra-tion No.	GDC Req.	System Name	Fluid	Line Size (in)	Essent System	Potent Bypass Path	Valve Number	Valve Location	LLRT	Valve Type and Operator	Primary Act-uation	Secon-dary Act-uation	Normal Position	Shut-down Position	Post Accident Position	Power Failure Position	Cont. Isolation Signal	Valve Closure Time	Power Source
20BQ208	57	MS drain line	steam	2.0	no	no	LBA20 AA441	outside	no	globe/ MOV	RM	RM	close	close	close	as-is	n/a	≤ 15 sec	32BNB02
30BQ307	57	MS from SG 3	steam	27.5	no	no	LBA30 AA002	outside	no	gate/HOV	RM	RM	open	close	o/c	close	no	n/a	n/a
30BQ307	57	MS to MSRIV	steam	14.0	no	no	LBA33 AA001	outside	no	globe/ PORV	self	self	close	close	o/c	close	no	n/a	n/a
30BQ307	57	MS to MSRCV	steam	14.0	no	no	LBA33 AA101	outside	no	globe cont /MOV	RM	RM	close	close	o/c	as-is	no	n/a	33BRA
30BQ307	57	MS to MSSV	steam	8.0	no	no	LBA31 AA191	outside	no	safety	self	self	close	close	o/c	n/a	n/a	n/a	n/a
30BQ307	57	MS to MSSV	steam	8.0	no	no	LBA32 AA191	outside	no	safety	self	self	close	close	o/c	n/a	n/a	n/a	n/a
30BQ307	57	MS warm up line	steam	6.0	no	no	LBA34 AA001	outside	no	globe/ MOV	RM	RM	close	close	close	as-is	n/a	≤ 30 sec	33BNB02
30BQ307	57	MS drain line	steam	2.0	no	no	LBA30 AA441	outside	no	globe/ MOV	RM	RM	close	close	close	as-is	n/a	≤ 15 sec	33BNB02
40BQ410	57	MS from SG 4	steam	27.5	no	no	LBA40 AA002	outside	no	gate/HOV	RM	RM	open	close	o/c	close	no	n/a	n/a
40BQ410	57	MS to MSRIV	steam	14.0	no	no	LBA43 AA001	outside	no	globe/ PORV	self	self	close	close	o/c	close	no	n/a	n/a
40BQ410	57	MS to MSRCV	steam	14.0	no	no	LBA43 AA101	outside	no	globe cont /MOV	RM	RM	close	close	o/c	as-is	no	n/a	34BRA
40BQ410	57	MS to MSSV	steam	8.0	no	no	LBA41 AA191	outside	no	safety	Self	self	close	close	o/c	n/a	n/a	n/a	n/a
40BQ410	57	MS to MSSV	steam	8.0	no	no	LBA42 AA191	outside	no	safety	Self	self	close	close	o/c	n/a	n/a	n/a	32BNB02
40BQ410	57	MS warm up line	steam	6.0	no	no	LBA44 AA001	outside	no	globe/ MOV	RM	RM	close	close	close	as-is	n/a	≤ 30 sec	34BNB02
40BQ410	57	MS drain line	steam	2.0	no	no	LBA40 AA441	outside	no	globe/ MOV	RM	RM	close	close	close	as-is	n/a	≤ 15 sec	34BNB02
10BQ304	57	MC to BD Clrs	water	6.0	no	no	LCA90 AA004	inside	C	swing check	self	self	open	close	close	n/a	n/a	n/a	n/a

Table 6.2.4-1—Containment Penetration, Isolation Valve, and Actuator Data
Sheet 16 of 22

Penetra-tion No.	GDC Req.	System Name	Fluid	Line Size (in)	Essent System	Potent Bypass Path	Valve Number	Valve Location	LLRT	Valve Type and Operator	Primary Act-uation	Secon-dary Act-uation	Normal Position	Shut-down Position	Post Accident Position	Power Failure Position	Cont. Isolation Signal	Valve Closure Time	Power Source
10BQ304	57	MC to BD Clrs	water	6.0	no	no	LCA90 AA003	outside	C	gate/ MOV	PS	RM	open	close	close	as-is	stage 1	≤ 30 sec	32BNB03
10BQ305	57	MC from BD Clrs	water	6.0	no	no	LCA90 AA005	inside	C	gate/MOV	PS	RM	open	close	close	as-is	stage 1	≤ 30 sec	33BRA
10BQ305	57	MC from BD Clrs	water	6.0	no	no	LCA90 AA006	outside	C	gate/ MOV	PS	RM	open	close	close	as-is	stage 1	≤ 30 sec	32BNB03
60BQ019	57	SG BD Clrs	water	6.0	no	no	LCQ51 AA002	inside	C	gate/ MOV	PS	RM	open	close	close	as-is	stage 1	≤ 30 sec	31BRA
60BQ019	57	SG BD Clrs	water	6.0	no	no	LCQ51 AA003	outside	C	gate/ MOV	PS	RM	open	close	close	as-is	stage 1	≤ 30 sec	34BNB03
60BQ205	57	SG BD Clrs	water	12.0	no	no	LCQ52 AA001	inside	C	gate/ MOV	PS	RM	open	close	close	as-is	stage 1	≤ 60 sec	33BRA
60BQ205	57	SG BD Clrs	water	12.0	no	no	LCQ52 AA002	outside	C	gate/ MOV	PS	RM	open	close	close	as-is	stage 1	≤ 60 sec	32BNB03
60BQ041	57	NGDS	gas	1.0	no	no	QJB40 AA002	inside	C	globe/ MOV	PS	RM	open	open	close	as-is	stage 1	≤ 15 sec	34BRA
60BQ041	57	NGDS	gas	1.0	no	no	QJB40 AA001	outside	C	globe/ MOV	PS	RM	open	open	close	as-is	stage 1	≤ 15 sec	31BNB03
60BQ066	57	NGDS	gas	1.0	no	no	QJB40 AA003	outside	C	globe/ MOV	PS	RM	open	open	close	as-is	stage 1	≤ 15 sec	31BNB03
60BQ066	57	NGDS	gas	1.0	no	no	QJB40 AA004	inside	C	globe/ MOV	PS	RM	open	open	close	as-is	stage 1	≤ 15 sec	34BRA
41BQ035	57	CW Supply to CVS	water	8.0	no	no	QNJ41 AA003	inside	C	lift check	self	self	open	open	close	n/a	n/a	n/a	n/a
41BQ035	57	Op CW Supply to CVS	water	8.0	no	no	QNJ41 AA002	outside	C	globe/ MOV	PS	RM	open	open	close	as-is	stage 1	≤ 40 sec	34BNB03
41BQ036	57	Op CW return CVS	water	8.0	no	no	QNJ41 AA027	inside	C	globe/ MOV	PS	RM	open	open	close	as-is	stage 1	≤ 40 sec	31BRA
41BQ036	57	Op CW return CVS	water	8.0	no	no	QNJ41 AA028	outside	C	globe/ MOV	PS	RM	open	open	close	as-is	stage 1	≤ 40 sec	34BNB03

Table 6.2.4-1—Containment Penetration, Isolation Valve, and Actuator Data
Sheet 17 of 22

Penetration No.	GDC Req.	System Name	Fluid	Line Size (in)	Essent System	Potent Bypass Path	Valve Number	Valve Location	LLRT	Valve Type and Operator	Primary Actuation	Secondary Actuation	Normal Position	Shutdown Position	Post Accident Position	Power Failure Position	Cont. Isolation Signal	Valve Closure Time	Power Source
11BQ023	57	NSS for SG BD	water	0.375	no	no	QUC11 AA011	inside	C	globe/ MOV	PS	RM	open	close	close	as-is	stage 1	≤ 15 sec	34BRA
11BQ023	57	NSS for SG BD	water	0.375	no	no	QUC11 AA001	outside	C	globe/ MOV	PS	RM	open	close	close	as-is	stage 1	≤ 15 sec	31BNB03
12BQ024	57	NSS for SG BD	water	0.375	no	no	QUC12 AA011	inside	C	globe/ MOV	PS	RM	open	close	close	as-is	stage 1	≤ 15 sec	34BRA
12BQ024	57	NSS for SG BD	water	0.375	no	no	QUC12 AA001	outside	C	globe/ MOV	PS	RM	open	close	close	as-is	stage 1	≤ 15 sec	31BNB03
13BQ025	57	NSS for SG BD	water	0.375	no	no	QUC13 AA011	inside	C	globe/ MOV	PS	RM	open	close	close	as-is	stage 1	≤ 15 sec	31BRA
13BQ025	57	NSS for SG BD	water	0.375	no	no	QUC13 AA001	outside	C	globe/ MOV	PS	RM	open	close	close	as-is	stage 1	≤ 15 sec	34BNB03
14BQ026	57	NSS for SG BD	water	0.375	no	no	QUC14 AA011	inside	C	globe/ MOV	PS	RM	open	close	close	as-is	stage 1	≤ 15 sec	31BRA
14BQ026	57	NSS for SG BD	water	0.375	no	no	QUC14 AA001	outside	C	globe/ MOV	PS	RM	open	close	close	as-is	stage 1	≤ 15 sec	34BNB03
10BQ030	56/57	CADS to IA	air	2.0	no	no	SCB01 AA002	inside	C	globe/ MOV	PS	RM	open	open	close	as-is	stage 1	≤ 15 sec	31BRA
10BQ030	56/57	CADS to IA	air	2.0	no	no	SCB01 AA001	outside	C	globe/ MOV	PS	RM	open	open	close	as-is	stage 1	≤ 15 sec	34BNB03
01BQ031	56/57	CADS to SA	air	2.0	no	no	SCB02 AA002	inside	C	globe/ manual	n/a	n/a	close	open	close	n/a	admin close	n/a	n/a
01BQ031	56/57	CADS to SA	air	2.0	no	no	SCB02 AA001	outside	C	globe/ manual	n/a	n/a	close	open	close	n/a	admin close	n/a	n/a
30BQ033	56/57	FWDS inside NI	water	8.0	no	no	SGB30 AA032	inside	C	gate/ MOV	PS	RM	close	open	close	as-is	stage 1	≤ 40 sec	31BRA
30BQ033	56/57	FWDS inside NI	water	8.0	no	no	SGB30 AA031	outside	C	gate/ MOV	PS	RM	close	open	close	as-is	stage 1	≤ 40 sec	34BNB03
60BQ064	n/a	Mech. Spare (Dedicated Penetration)	air	n/a	n/a	n/a	n/a	n/a	no	n/a	n/a	n/a	n/a	n/a	n/a	n/a	n/a	n/a	n/a

Table 6.2.4-1—Containment Penetration, Isolation Valve, and Actuator Data
Sheet 18 of 22

Penetra-tion No.	GDC Req.	System Name	Fluid	Line Size (in)	Essent System	Potent Bypass Path	Valve Number	Valve Location	LLRT	Valve Type and Operator	Primary Act-uation	Secon-dary Act-uation	Normal Position	Shut-down Position	Post Accident Position	Power Failure Position	Cont. Isolation Signal	Valve Closure Time	Power Source
32	n/a	Mech. Spare	air	n/a	n/a	n/a	n/a	n/a	no	n/a	n/a	n/a	n/a	n/a	n/a	n/a	n/a	n/a	n/a
40	n/a	Mech. Spare	air	n/a	n/a	n/a	n/a	n/a	no	n/a	n/a	n/a	n/a	n/a	n/a	n/a	n/a	n/a	n/a
67	n/a	Electr. Spare	air	n/a	n/a	n/a	n/a	n/a	no	n/a	n/a	n/a	n/a	n/a	n/a	n/a	n/a	n/a	n/a
68	n/a	Electr. Spare	air	n/a	n/a	n/a	n/a	n/a	no	n/a	n/a	n/a	n/a	n/a	n/a	n/a	n/a	n/a	n/a
69	n/a	Electr. Spare	air	n/a	n/a	n/a	n/a	n/a	no	n/a	n/a	n/a	n/a	n/a	n/a	n/a	n/a	n/a	n/a
75	n/a	Electr. Spare	air	n/a	n/a	n/a	n/a	n/a	no	n/a	n/a	n/a	n/a	n/a	n/a	n/a	n/a	n/a	n/a
76	n/a	Mech. Spare	air	n/a	n/a	n/a	n/a	n/a	no	n/a	n/a	n/a	n/a	n/a	n/a	n/a	n/a	n/a	n/a
77	n/a	Mech. Spare	air	n/a	n/a	n/a	n/a	n/a	no	n/a	n/a	n/a	n/a	n/a	n/a	n/a	n/a	n/a	n/a
78	n/a	Mech. Spare	air	n/a	n/a	n/a	n/a	n/a	no	n/a	n/a	n/a	n/a	n/a	n/a	n/a	n/a	n/a	n/a
79	n/a	Mech. Spare	air	n/a	n/a	n/a	n/a	n/a	no	n/a	n/a	n/a	n/a	n/a	n/a	n/a	n/a	n/a	n/a
10GD130	53	Medium voltage	air	n/a	n/a	n/a	n/a	n/a	B	n/a	n/a	n/a	n/a	n/a	n/a	n/a	n/a	n/a	n/a
10GD131	53	Medium voltage	air	n/a	n/a	n/a	n/a	n/a	B	n/a	n/a	n/a	n/a	n/a	n/a	n/a	n/a	n/a	n/a
10GF132	53	I&C	air	n/a	n/a	n/a	n/a	n/a	B	n/a	n/a	n/a	n/a	n/a	n/a	n/a	n/a	n/a	n/a
10GF133	53	I&C	air	n/a	n/a	n/a	n/a	n/a	B	n/a	n/a	n/a	n/a	n/a	n/a	n/a	n/a	n/a	n/a
10GF134	53	I&C	air	n/a	n/a	n/a	n/a	n/a	B	n/a	n/a	n/a	n/a	n/a	n/a	n/a	n/a	n/a	n/a
10GF135	53	I&C	air	n/a	n/a	n/a	n/a	n/a	B	n/a	n/a	n/a	n/a	n/a	n/a	n/a	n/a	n/a	n/a
10GP136	53	Low voltage	air	n/a	n/a	n/a	n/a	n/a	B	n/a	n/a	n/a	n/a	n/a	n/a	n/a	n/a	n/a	n/a
10GF137	53	I&C	air	n/a	n/a	n/a	n/a	n/a	B	n/a	n/a	n/a	n/a	n/a	n/a	n/a	n/a	n/a	n/a
10GF138	53	I&C	air	n/a	n/a	n/a	n/a	n/a	B	n/a	n/a	n/a	n/a	n/a	n/a	n/a	n/a	n/a	n/a
10GF139	53	I&C	air	n/a	n/a	n/a	n/a	n/a	B	n/a	n/a	n/a	n/a	n/a	n/a	n/a	n/a	n/a	n/a
10GE140	53	Low voltage	air	n/a	n/a	n/a	n/a	n/a	B	n/a	n/a	n/a	n/a	n/a	n/a	n/a	n/a	n/a	n/a

Table 6.2.4-1—Containment Penetration, Isolation Valve, and Actuator Data
Sheet 19 of 22

Penetra-tion No.	GDC Req.	System Name	Fluid	Line Size (in)	Essent System	Potent Bypass Path	Valve Number	Valve Location	LLRT	Valve Type and Operator	Primary Act-uation	Secon-dary Act-uation	Normal Position	Shut-down Position	Post Accident Position	Power Failure Position	Cont. Isolation Signal	Valve Closure Time	Power Source
10GP141	53	Low voltage	air	n/a	n/a	n/a	n/a	n/a	B	n/a	n/a	n/a	n/a	n/a	n/a	n/a	n/a	n/a	n/a
10GE142	53	Low voltage	air	n/a	n/a	n/a	n/a	n/a	B	n/a	n/a	n/a	n/a	n/a	n/a	n/a	n/a	n/a	n/a
10GE143	53	Low voltage	air	n/a	n/a	n/a	n/a	n/a	B	n/a	n/a	n/a	n/a	n/a	n/a	n/a	n/a	n/a	n/a
10GE144	53	Low voltage	air	n/a	n/a	n/a	n/a	n/a	B	n/a	n/a	n/a	n/a	n/a	n/a	n/a	n/a	n/a	n/a
10GE145	53	Low voltage	air	n/a	n/a	n/a	n/a	n/a	B	n/a	n/a	n/a	n/a	n/a	n/a	n/a	n/a	n/a	n/a
10GE146	53	Low voltage	air	n/a	n/a	n/a	n/a	n/a	B	n/a	n/a	n/a	n/a	n/a	n/a	n/a	n/a	n/a	n/a
10GE147	53	Low voltage	air	n/a	n/a	n/a	n/a	n/a	B	n/a	n/a	n/a	n/a	n/a	n/a	n/a	n/a	n/a	n/a
10GE148	53	Low voltage	air	n/a	n/a	n/a	n/a	n/a	B	n/a	n/a	n/a	n/a	n/a	n/a	n/a	n/a	n/a	n/a
10GE149	53	Low voltage	air	n/a	n/a	n/a	n/a	n/a	B	n/a	n/a	n/a	n/a	n/a	n/a	n/a	n/a	n/a	n/a
152	n/a	Mech. Spare	air	n/a	n/a	n/a	n/a	n/a	no	n/a	n/a	n/a	n/a	n/a	n/a	n/a	n/a	n/a	n/a
153	n/a	Mech. Spare	air	n/a	n/a	n/a	n/a	n/a	no	n/a	n/a	n/a	n/a	n/a	n/a	n/a	n/a	n/a	n/a
212	n/a	Mech. Spare	air	n/a	n/a	n/a	n/a	n/a	no	n/a	n/a	n/a	n/a	n/a	n/a	n/a	n/a	n/a	n/a
213	n/a	Mech. Spare	air	n/a	n/a	n/a	n/a	n/a	no	n/a	n/a	n/a	n/a	n/a	n/a	n/a	n/a	n/a	n/a
20GD230	53	Medium voltage	air	n/a	n/a	n/a	n/a	n/a	B	n/a	n/a	n/a	n/a	n/a	n/a	n/a	n/a	n/a	n/a
20GD231	53	Medium voltage	air	n/a	n/a	n/a	n/a	n/a	B	n/a	n/a	n/a	n/a	n/a	n/a	n/a	n/a	n/a	n/a
20GE232	53	Low voltage	air	n/a	n/a	n/a	n/a	n/a	B	n/a	n/a	n/a	n/a	n/a	n/a	n/a	n/a	n/a	n/a
20GP233	53	Low voltage	air	n/a	n/a	n/a	n/a	n/a	B	n/a	n/a	n/a	n/a	n/a	n/a	n/a	n/a	n/a	n/a
20GE234	53	Low voltage	air	n/a	n/a	n/a	n/a	n/a	B	n/a	n/a	n/a	n/a	n/a	n/a	n/a	n/a	n/a	n/a

Table 6.2.4-1—Containment Penetration, Isolation Valve, and Actuator Data
Sheet 20 of 22

Penetra-tion No.	GDC Req.	System Name	Fluid	Line Size (in)	Essent System	Potent Bypass Path	Valve Number	Valve Location	LLRT	Valve Type and Operator	Primary Act-uation	Secon-dary Act-uation	Normal Position	Shut-down Position	Post Accident Position	Power Failure Position	Cont. Isolation Signal	Valve Closure Time	Power Source
20GE235	53	Low voltage	air	n/a	n/a	n/a	n/a	n/a	B	n/a	n/a	n/a	n/a	n/a	n/a	n/a	n/a	n/a	n/a
20GE236	53	Low voltage	air	n/a	n/a	n/a	n/a	n/a	B	n/a	n/a	n/a	n/a	n/a	n/a	n/a	n/a	n/a	n/a
20GF237	53	I&C	air	n/a	n/a	n/a	n/a	n/a	B	n/a	n/a	n/a	n/a	n/a	n/a	n/a	n/a	n/a	n/a
20GE238	53	Low voltage	air	n/a	n/a	n/a	n/a	n/a	B	n/a	n/a	n/a	n/a	n/a	n/a	n/a	n/a	n/a	n/a
20GE239	53	Low voltage	air	n/a	n/a	n/a	n/a	n/a	B	n/a	n/a	n/a	n/a	n/a	n/a	n/a	n/a	n/a	n/a
20GF240	53	I&C	air	n/a	n/a	n/a	n/a	n/a	B	n/a	n/a	n/a	n/a	n/a	n/a	n/a	n/a	n/a	n/a
20GF241	53	I&C	air	n/a	n/a	n/a	n/a	n/a	B	n/a	n/a	n/a	n/a	n/a	n/a	n/a	n/a	n/a	n/a
20GE242	53	Low voltage	air	n/a	n/a	n/a	n/a	n/a	B	n/a	n/a	n/a	n/a	n/a	n/a	n/a	n/a	n/a	n/a
20GE243	53	Low voltage	air	n/a	n/a	n/a	n/a	n/a	B	n/a	n/a	n/a	n/a	n/a	n/a	n/a	n/a	n/a	n/a
20GE244	53	Low voltage	air	n/a	n/a	n/a	n/a	n/a	B	n/a	n/a	n/a	n/a	n/a	n/a	n/a	n/a	n/a	n/a
20GE245	53	Low voltage	air	n/a	n/a	n/a	n/a	n/a	B	n/a	n/a	n/a	n/a	n/a	n/a	n/a	n/a	n/a	n/a
20GF246	53	I&C	air	n/a	n/a	n/a	n/a	n/a	B	n/a	n/a	n/a	n/a	n/a	n/a	n/a	n/a	n/a	n/a
20GF247	53	I&C	air	n/a	n/a	n/a	n/a	n/a	B	n/a	n/a	n/a	n/a	n/a	n/a	n/a	n/a	n/a	n/a
20GF248	53	I&C	air	n/a	n/a	n/a	n/a	n/a	B	n/a	n/a	n/a	n/a	n/a	n/a	n/a	n/a	n/a	n/a
20GF249	53	I&C	air	n/a	n/a	n/a	n/a	n/a	B	n/a	n/a	n/a	n/a	n/a	n/a	n/a	n/a	n/a	n/a
313	n/a	Mech. Spare	air	n/a	n/a	n/a	n/a	n/a	no	n/a	n/a	n/a	n/a	n/a	n/a	n/a	n/a	n/a	n/a
314	n/a	Mech. Spare	air	n/a	n/a	n/a	n/a	n/a	no	n/a	n/a	n/a	n/a	n/a	n/a	n/a	n/a	n/a	n/a
30GD330	53	Medium voltage	air	n/a	n/a	n/a	n/a	n/a	B	n/a	n/a	n/a	n/a	n/a	n/a	n/a	n/a	n/a	n/a
30GD331	53	Medium voltage	air	n/a	n/a	n/a	n/a	n/a	B	n/a	n/a	n/a	n/a	n/a	n/a	n/a	n/a	n/a	n/a
30GP332	53	Low voltage	air	n/a	n/a	n/a	n/a	n/a	B	n/a	n/a	n/a	n/a	n/a	n/a	n/a	n/a	n/a	n/a
30GE333	53	Low voltage	air	n/a	n/a	n/a	n/a	n/a	B	n/a	n/a	n/a	n/a	n/a	n/a	n/a	n/a	n/a	n/a

Table 6.2.4-1—Containment Penetration, Isolation Valve, and Actuator Data
Sheet 21 of 22

Penetra-tion No.	GDC Req.	System Name	Fluid	Line Size (in)	Essent System	Potent Bypass Path	Valve Number	Valve Location	LLRT	Valve Type and Operator	Primary Act-uation	Secon-dary Act-uation	Normal Position	Shut-down Position	Post Accident Position	Power Failure Position	Cont. Isolation Signal	Valve Closure Time	Power Source
30GE334	53	Low voltage	air	n/a	n/a	n/a	n/a	n/a	B	n/a	n/a	n/a	n/a	n/a	n/a	n/a	n/a	n/a	n/a
30GE335	53	Low voltage	air	n/a	n/a	n/a	n/a	n/a	B	n/a	n/a	n/a	n/a	n/a	n/a	n/a	n/a	n/a	n/a
30GE336	53	Low voltage	air	n/a	n/a	n/a	n/a	n/a	B	n/a	n/a	n/a	n/a	n/a	n/a	n/a	n/a	n/a	n/a
30GF337	53	I&C	air	n/a	n/a	n/a	n/a	n/a	B	n/a	n/a	n/a	n/a	n/a	n/a	n/a	n/a	n/a	n/a
30GE338	53	Low voltage	air	n/a	n/a	n/a	n/a	n/a	B	n/a	n/a	n/a	n/a	n/a	n/a	n/a	n/a	n/a	n/a
30GE339	53	Low voltage	air	n/a	n/a	n/a	n/a	n/a	B	n/a	n/a	n/a	n/a	n/a	n/a	n/a	n/a	n/a	n/a
30GF340	53	I&C	air	n/a	n/a	n/a	n/a	n/a	B	n/a	n/a	n/a	n/a	n/a	n/a	n/a	n/a	n/a	n/a
30GF341	53	I&C	air	n/a	n/a	n/a	n/a	n/a	B	n/a	n/a	n/a	n/a	n/a	n/a	n/a	n/a	n/a	n/a
30GE342	53	Low voltage	air	n/a	n/a	n/a	n/a	n/a	B	n/a	n/a	n/a	n/a	n/a	n/a	n/a	n/a	n/a	n/a
30GE343	53	Low voltage	air	n/a	n/a	n/a	n/a	n/a	B	n/a	n/a	n/a	n/a	n/a	n/a	n/a	n/a	n/a	n/a
30GE344	53	Low voltage	air	n/a	n/a	n/a	n/a	n/a	B	n/a	n/a	n/a	n/a	n/a	n/a	n/a	n/a	n/a	n/a
30GE345	53	Low voltage	air	n/a	n/a	n/a	n/a	n/a	B	n/a	n/a	n/a	n/a	n/a	n/a	n/a	n/a	n/a	n/a
30GF346	53	I&C	air	n/a	n/a	n/a	n/a	n/a	B	n/a	n/a	n/a	n/a	n/a	n/a	n/a	n/a	n/a	n/a
30GF347	53	I&C	air	n/a	n/a	n/a	n/a	n/a	B	n/a	n/a	n/a	n/a	n/a	n/a	n/a	n/a	n/a	n/a
30GF348	53	I&C	air	n/a	n/a	n/a	n/a	n/a	B	n/a	n/a	n/a	n/a	n/a	n/a	n/a	n/a	n/a	n/a
30GF349	53	I&C	air	n/a	n/a	n/a	n/a	n/a	B	n/a	n/a	n/a	n/a	n/a	n/a	n/a	n/a	n/a	n/a
40GD430	53	Medium voltage	air	n/a	n/a	n/a	n/a	n/a	B	n/a	n/a	n/a	n/a	n/a	n/a	n/a	n/a	n/a	n/a
40GD431	53	Medium voltage	air	n/a	n/a	n/a	n/a	n/a	B	n/a	n/a	n/a	n/a	n/a	n/a	n/a	n/a	n/a	n/a
40GF432	53	I&C	air	n/a	n/a	n/a	n/a	n/a	B	n/a	n/a	n/a	n/a	n/a	n/a	n/a	n/a	n/a	n/a
40GF433	53	I&C	air	n/a	n/a	n/a	n/a	n/a	B	n/a	n/a	n/a	n/a	n/a	n/a	n/a	n/a	n/a	n/a
40GF434	53	I&C	air	n/a	n/a	n/a	n/a	n/a	B	n/a	n/a	n/a	n/a	n/a	n/a	n/a	n/a	n/a	n/a
40GF435	53	I&C	air	n/a	n/a	n/a	n/a	n/a	B	n/a	n/a	n/a	n/a	n/a	n/a	n/a	n/a	n/a	n/a
40GF436	53	I&C	air	n/a	n/a	n/a	n/a	n/a	B	n/a	n/a	n/a	n/a	n/a	n/a	n/a	n/a	n/a	n/a

Table 6.2.4-1—Containment Penetration, Isolation Valve, and Actuator Data
Sheet 22 of 22

Penetra-tion No.	GDC Req.	System Name	Fluid	Line Size (in)	Essent System	Potent Bypass Path	Valve Number	Valve Location	LLRT	Valve Type and Operator	Primary Act-uation	Secon-dary Act-uation	Normal Position	Shut-down Position	Post Accident Position	Power Failure Position	Cont. Isolation Signal	Valve Closure Time	Power Source
40GE437	53	Low voltage	air	n/a	n/a	n/a	n/a	n/a	B	n/a	n/a	n/a	n/a	n/a	n/a	n/a	n/a	n/a	n/a
40GF438	53	I&C	air	n/a	n/a	n/a	n/a	n/a	B	n/a	n/a	n/a	n/a	n/a	n/a	n/a	n/a	n/a	n/a
40GF439	53	I&C	air	n/a	n/a	n/a	n/a	n/a	B	n/a	n/a	n/a	n/a	n/a	n/a	n/a	n/a	n/a	n/a
40GF440	53	I&C	air	n/a	n/a	n/a	n/a	n/a	B	n/a	n/a	n/a	n/a	n/a	n/a	n/a	n/a	n/a	n/a
40GE441	53	Low voltage	air	n/a	n/a	n/a	n/a	n/a	B	n/a	n/a	n/a	n/a	n/a	n/a	n/a	n/a	n/a	n/a
40GE442	53	Low voltage	air	n/a	n/a	n/a	n/a	n/a	B	n/a	n/a	n/a	n/a	n/a	n/a	n/a	n/a	n/a	n/a
40GE443	53	Low voltage	air	n/a	n/a	n/a	n/a	n/a	B	n/a	n/a	n/a	n/a	n/a	n/a	n/a	n/a	n/a	n/a
40GE444	53	Low voltage	air	n/a	n/a	n/a	n/a	n/a	B	n/a	n/a	n/a	n/a	n/a	n/a	n/a	n/a	n/a	n/a
40GE445	53	Low voltage	air	n/a	n/a	n/a	n/a	n/a	B	n/a	n/a	n/a	n/a	n/a	n/a	n/a	n/a	n/a	n/a
40GE446	53	Low voltage	air	n/a	n/a	n/a	n/a	n/a	B	n/a	n/a	n/a	n/a	n/a	n/a	n/a	n/a	n/a	n/a
40GE447	53	Low voltage	air	n/a	n/a	n/a	n/a	n/a	B	n/a	n/a	n/a	n/a	n/a	n/a	n/a	n/a	n/a	n/a
40GP448	53	Low voltage	air	n/a	n/a	n/a	n/a	n/a	B	n/a	n/a	n/a	n/a	n/a	n/a	n/a	n/a	n/a	n/a
454	n/a	Mech. Spare	air	n/a	n/a	n/a	n/a	n/a	no	n/a	n/a	n/a	n/a	n/a	n/a	n/a	n/a	n/a	n/a
455	n/a	Mech. Spare	air	n/a	n/a	n/a	n/a	n/a	no	n/a	n/a	n/a	n/a	n/a	n/a	n/a	n/a	n/a	n/a

Next File

is prompted to manually acknowledge P12, which allows the isolation valves to be closed before RCS pressure is reduced below the accumulator pressure.

A pressure region exists below the P12 pressure threshold where the accumulators are required to be available but Plant Technical Specifications allow an accumulator isolation valve to be closed for a short period of time. To accommodate operation in this pressure region, an automatic 'open' signal is sent to the accumulator isolation valves when an SIS actuation occurs. The SIS actuation function is described in Section 7.3.1.2.

Two redundant ALU within a division send the automatic opening signal to the isolation valve of the corresponding accumulator (i.e., PS division one opens the isolation valve related to the train 1 accumulator). This arrangement precludes a single actuator logic unit (ALU) failure from preventing the opening of a valve. Any other single failure which could prevent opening of a valve, such as failure of a PACS module or of the valve itself, is detected immediately by failure of the valve to open. Corrective actions can then be taken before continued increase in pressure.

The operational status of the PS on a divisional basis is provided to the operator. Indications and alarms are provided to the operator regarding the state of the P12 permissive signal. Additionally, the following indications are provided to the operator to verify correct operation of the interlock:

- Pressure and level of each accumulator.
- Open or closed position of each accumulator isolation valve.

7.6.1.2.3 Interlocks Isolating Redundant CCWS Trains

The CCWS is comprised of four closed-loop, safety-related supply trains that function to cool and transfer heat load from safety users to the heat sink. The common loads cooled by the CCWS consist of two separate sets, referred to as Common-1 and Common-2. The Common-1 header is supplied by either CCW train one or train two while the Common-2 header is supplied by either CCW train three or train four. Each common header is further divided into two sub-headers designated as Common 1a and 1b or Common 2a and 2b.

The operation of the CCWS is described in Section 9.2.2.

Interlocks are provided so that no two redundant CCWS trains are connected to the same common header at the same time. Each CCWS train is provided with four switchover valves to perform the required train separation.

CCWS train one has a single valve on the supply side and a single valve on the return side of Common 1a. Train two also has a single valve on both the supply and return sides of Common 1a. These valves are interlocked so that both valves (supply and

return) on train one must be closed before either valve on train two can be opened. Likewise, both valves on train two must be closed before either valve on train one can be opened. The same valve arrangement and interlocks are provided relative to Common 1b to provide separation between trains one and two, and on Common 2a and 2b to provide separation between trains three and four. The functional logic for the switchover valve interlock is shown in Figure 7.6-1.

Another interlocking function is required concerning the cooling paths of the Common 1b and Common 2b headers toward the reactor coolant pump (RCP) thermal barriers. Either the Common 1b or 2b headers can provide cooling to the RCP thermal barriers. To maintain strict CCWS train separation, the containment isolation valves (CIV) on the RCP thermal barriers cooling path on the supply and return side of Common 1b cannot be opened unless ~~the CIVs on both the supply and return side of~~one of the two CIVs on the supply side and one of the two CIVs on the return side of Common 2b are closed, and vice versa. The functional logic for the CIV interlock is shown in Figure 7.6-2.

The interlock functions maintaining separation between redundant CCWS trains are performed by the SAS. Each switchover valve is assigned to a SAS division based on the CCWS train it belongs to (i.e., switchover valves on train one are assigned to SAS division one). Each division of SAS acquires position information from the valves to which it is assigned, and controls those same valves. In any SAS division, the information about the position of valves in other trains that is needed to control a switchover valve is provided via network connection by the SAS division which acquires the information. For example, the positions of the train two valves on the supply and return of Common 1a are acquired by SAS division two. This information is transmitted to SAS division one to perform the interlock function for the train one valves on the supply and return of Common-1a.

The interlock function concerning the CIVs is also performed by the SAS, but is only performed in divisions one and four. The CIVs are assigned to SAS divisions for control based on which electrical division provides power to the valves (i.e., valves powered by electrical division one are controlled by SAS division one). The closed position indications of the CIVs on Common-1b are used to allow opening of the CIVs on Common 1a, and vice versa.

Redundant SAS controllers are provided in each division, and redundant networks are used between the divisions so that no single failure within the SAS can result in inadvertent connection of redundant CCWS trains. Each valve is equipped with redundant open/closed position sensors so that a single sensor failure does not result in inadvertent connection of redundant CCWS trains. While each switchover valve is controlled by one I&C division, multiple PACS modules in that division, acting on multiple solenoid devices, are required in order to change the position of a switchover valve. Therefore, a single PACS module failure does not result in inadvertent

connection of redundant CCWS trains. For the CIV interlock, redundancy is obtained through the use of inner and outer CIVs, each controlled by a different division of I&C.

The single failure tolerance of the CCWS with respect to availability of the required cooling function is encompassed within the redundancy of the mechanical system design, as described in Section 9.2.2.

The following indications are provided to the operator relative to this interlock:

- Indication of open or closed position of each interlocked valve.
- Alarm indicating position conflict between supply and return switchover valve of the same CCWS train relative to the same common header.
- Alarm indicating position conflict between CIVs of the same common header.
- Alarm indicating connection of two CCWS trains to the same common header.

7.6.1.2.4 Interlocks to Provide Low Temperature Over-Pressure Protection

Section 5.2.2 describes LTOP for the U.S. EPR design. Low temperature RCPB overpressure events include mass input events and heat input events. A start of four MHSI pumps with one large miniflow line isolation valve failed into the closed position is the limiting case.

The medium head safety injection (MHSI) pumps are used to inject borated water from the in-containment refueling water storage tank (IRWST) into the cold legs when a safety injection signal is present. A large miniflow line branches off from the discharge side of each MHSI pump and provides a path, through a motor operated isolation valve, to the IRWST. These isolation valves are interlocked in the open position during low temperature operations to reduce the MHSI injection pressure.

The interlock holding open the MHSI large miniflow lines serves two purposes:

- Protection against brittle fracture of the reactor pressure vessel (RPV).
- Protection of the RHR system from over-pressurization when it is connected to the RCS.

Brittle Fracture Protection:

The PSRVs ultimately provide protection against brittle fracture of the RPV. However, the PSRV setpoints and sizing are based on the pressure and flow rates of four MHSI pumps, with one large miniflow line failed closed, injecting into the RCS. For this reason, below the P17 temperature threshold, the large miniflow line isolation valves are interlocked in the open position to make brittle fracture protection via the PSRVs

9.2 Water Systems

9.2.1 Essential Service Water System

The function of the essential service water system (ESWS) is to remove heat from plant components which require cooling during normal operation, for safe shutdown of the reactor and following a design basis accident (DBA). This is accomplished by providing cooling water from the essential service water (ESW) cooling tower basins to the component cooling water system (CCWS) heat exchangers (HX), emergency diesel generator (EDG) HXs and ESW pump room coolers. The function of the ESW cooling towers is to dissipate heat rejected from the ESWS during all plant modes of operation.

Ultimate heat sink (UHS) components such as the mechanical draft cooling towers and site-specific basin support systems which include the ESW makeup system, ESW blowdown system and the ESW chemical treatment system are addressed in Section 9.2.5.

9.2.1.1 Design Bases

- ESWS structures, systems and components which provide essential cooling for safety-related equipment are designed to withstand the effects of natural phenomena such as earthquakes, tornadoes, hurricanes, floods, and external missiles without loss of capability to perform their safety-related functions (GDC 2). Structures housing the system as well as the system components are capable of withstanding the effects of earthquakes. The seismic design of this system meets the guidance of RG 1.29 (Position C.1 for the safety-related portion, and Position C.2 for the non-safety-related portion). Refer to Section 3.2 for quality group classifications.

- Safety-related portions of the ESWS are designed to accommodate the effects of and to be compatible with the environmental conditions associated with normal operation, maintenance, testing, and postulated accidents. These shall be appropriately protected against dynamic effects, including the effects of missiles, pipe whipping and discharging fluids, that may result from equipment failures and from external events (GDC 4).

- The ESWS does not share structures, systems or components important to safety with other nuclear power plant units unless it has been shown that such sharing does not significantly impair the ability to perform their safety-related functions; including, the event of an accident in one unit, an orderly shutdown and cooldown of the remaining units (GDC 5).

- The ESWS functions to provide heat removal from the CCWS HXs, EDG HXs, and ESW pump room coolers during normal operation and accident conditions, and transfers that energy to the UHS (GDC 44).

- The ESWS is designed to permit appropriate periodic inspection of important components necessary to maintain the integrity and capability of the system (GDC 45).

- The ESWS is designed to permit appropriate periodic pressure and functional testing necessary to maintain structural and leak-tight integrity of its components, the operability and performance of the active components of the system, and the operability of the system as a whole. The ESWS is also designed to make sure the performance of the full operational sequence necessary to bring the system into operation for reactor shutdown is satisfactory. For loss of coolant accident (LOCA) conditions, operation of applicable portions of the protection system (PS) and the transfer between normal and emergency power sources is also provided (GDC 46).

The ESWS provides sufficient cooling water for removing heat from essential plant equipment and transferring the heat to the cooling towers over the full range of normal reactor operation. The ESWS flow capacity and supply capability are designed so that the temperatures in essential plant equipment remain within their specified limits.

The ESWS operates in conjunction with the CCWS and other reactor auxiliary components to provide a means to cool the reactor core and reactor coolant system (RCS) to achieve a safe shutdown. The safety-related ESWS divisions provide continued heat transfer from the fuel pool cooling system (FPCS) via the CCWS as long as any spent fuel assemblies are in the spent fuel storage pool located outside containment.

9.2.1.2 System Description

The ESWS consists of four separate, redundant, safety-related divisions, and one dedicated, non-safety-related division.

The ESWS cools the CCWS HX which acts as an intermediate loop isolating the ESWS from the RCS. The CCWS ~~is~~and ESWS are monitored to detect radioactive contamination into and out of the system.

The ESWS takes suction from the UHS cooling tower basin and provides cooling water to the CCWS HX, EDG HXs, and the ESW pump room coolers. The heated water is then returned to the UHS cooling tower. The system is shown in Figure 9.2.1-1—Essential Service Water System Piping & Instrumentation Diagram. Safety and seismic design classification of the components is provided in Section 3.2.

Each safety-related ESWS division consists of one ESWS pump, a debris filter, piping, valves, controls and instrumentation.

Provisions are made to make sure there is a continuous flow of cooling water under normal and accident operating conditions. The four safety-related divisions of the

ESWS are powered by Class 1E electrical buses and are emergency powered by the EDGs.

The non-safety-related dedicated division contains a dedicated ESWS pump, debris filter, piping, valves, controls, and instrumentation. The non-safety related ESWS pumps cooling water from the division four UHS cooling tower basin to the dedicated CCWS HX and back to the division four UHS cooling tower during severe accidents (SA). The dedicated ESWS ~~pump~~train is powered by Class 1E electrical ~~buses~~Division 4 and is capable of being supplied by an EDG or a station blackout diesel generator (SBODG).

Refer to Section 12.3.6.5.7 for ~~essential service water system~~ESWS design features which demonstrate compliance with the requirements of 10 CFR 20.1406. Refer to Section 11.5 for process and effluent radiological monitoring and sampling within the ESWS.

9.2.1.3 Component Description

9.2.1.3.1 Safety-Related Essential Service Water Pumps

Each of the four safety-related cooling divisions contains one 100 percent capacity pump. During normal operating conditions, two of the four divisions are operating. The required flow rate of each ESWS pump is defined by the heat to be removed from the system loads. Design parameters are listed in Table 9.2.1-1. The pumps are designed to fulfill the corresponding minimal required design mass flow rate plus an additional minimum flow margin of approximately 12.5 percent, under the following conditions:

- Minimal water level without cavitation.
- Head losses in the cooling water inlet piping according to full power plant operation.
- Fluctuations in the supplied electrical frequency.
- Increased pipe roughness due to aging and fouling.
- Fouled debris filters.
- Maximum pressure drop through the system HXs.
- Minimum water level in cooling tower basin considers minimum submergence requirements to prevent vortex effects, and net positive suction head to prevent cavitation of the ESWS pump.
- Maximum allowable water level differential across the coarse and fine screens.

Determination of the discharge head of the pumps is based on the dynamic pressure losses, the minimum/maximum water levels of the water source, and the head losses of the mechanical equipment of the associated ESWS at full load operation with an additional margin of approximately 10 percent added to the total head.

The pump motors are air cooled. To remove heat losses, an air recirculation system is installed for each division. In addition, anti-condensation heaters on the motors are switched on as soon as the pumps cease operation.

The four ESW pumps will trip on high bearing temperature, high differential pressure across the debris filter, low pump discharge flow, high pump discharge pressure, or cooling tower basin water level below low level for safe pump operation.

9.2.1.3.2 Dedicated Essential Service Water Pump

The 100 percent capacity dedicated ESW pump is normally in standby mode.

This non-safety-related pump is manually started only in response to certain postulated SA conditions; it is not credited for response to any DBA.

The required flow rate of the dedicated ESWS pump is defined by the heat to be removed from the dedicated CCWS HX. Design parameters are listed in Table 9.2.1-2. The pump is designed to fulfill the corresponding minimal required design mass flow rate under the following conditions:

- Minimal water level.
- Fluctuations in the supplied electrical frequency.
- Increased pipe roughness due to aging and fouling.
- Fouled debris filter.
- Minimum water level in cooling tower basin considers minimum submergence requirements to prevent vortex effects, and net positive suction head to prevent cavitation of the dedicated ESWS pump.
- Maximum allowable water level differential across the coarse and fine screens.

The pump motor is air cooled. In addition, an anti-condensation heater on the motor is switched on as soon as the pump ceases operation.

9.2.1.3.3 Debris Filters -Safety Divisions

The debris filters remove from the cooling water all debris particles that pass through coarse and fine screens and ~~from the cooling water that~~ would obstruct the system user HXs.

The debris filters are designed as an automatic backwash type. With increasing fouling, the differential pressure across the filter segments increases until reaching a preset operational point. The pressure relief backwash process of the filter is initiated by either the signal of the differential pressure measuring system, a timer after the start of the ESW pump or via a manual operator initiation.

The discharge and disposal of the collected debris must be ~~treated~~ in accordance with federal and state regulations relevant to site location.

To verify the function of the safety-related filter, an alternate safety-related filter blowdown path is provided. The line includes valve 30PEB10/20/30/40AA004, Filter Emergency Blowdown Isolation Valve.

9.2.1.3.4 Debris Filter -Dedicated Division

The debris filter removes from the cooling water all debris particles that pass through coarse and fine screens and ~~from the cooling water that~~ would obstruct the dedicated CCWS HX.

The debris filter is designed as an automatic backwash type. With increasing fouling, the differential pressure across the filter segments increases until reaching a preset operational point. The pressure relief backwash process of the filter is initiated by either the signal of the differential pressure measuring system, a timer after the start of the dedicated ESW pump or via a manual operator initiation.

The discharge and disposal of the collected debris must be ~~treated~~ in accordance with federal and state regulations relevant to the site location.

9.2.1.3.5 Piping, Valves, and Fittings

System materials must be selected that are suitable to the site location, ESW fluid properties and site installation. System materials that come into contact with one another must be chosen so as to minimize galvanic corrosion. All safety-related piping, valves, and fittings are in accordance with ASME Code Section III, Class 3 (Reference 1).

Specific chemistry requirements are defined to minimize corrosion, prevent scale formation, and limit biological and sedimentary fouling that could inhibit flow. In addition, there are chemical additives used to reduce scaling and corrosion, and to treat potential biological contaminants, which are added via the normal makeup system piping to the cooling tower basin.

A COL applicant that references the U.S. EPR design certification will provide a description of materials that will be used for the essential service water system (ESWS)

at their site location, including the basis for determining that the materials being used are appropriate for the site location and for the fluid properties that apply.

Pipe diameters for all branches of the ESWS are based on limiting the flow velocity to 10 ft/sec for normal modes of operation that are expected to occur frequently. ESW piping in each train is sized to provide sufficient flow in that train to remove design heat loads from system user heat exchangers under normal operating, shutdown/cooldown, design basis accident, and (for ESW Train 4 only) severe accident conditions with flow velocities less than 10 feet per second. Refer to U.S. EPR FSAR Tier 2 Table 9.2.5-1 for the total required minimum ESW flow rates and required ESW temperatures for the different operating conditions.

Water hammer prevention and mitigation is accomplished through a combination of design features, surveillance, and testing measures. A keep-fill line and monitoring of water level in the tower riser of a standby train is administratively controlled to keep the water level in the tower riser above the predetermined minimum. The non-safety-related function of the tower keep-fill line is to replenish water in the cooling tower riser pipe that is lost due to leakages in the system, thereby minimizing potential water hammer effects on an actuation of the standby train due to a large air void in the piping. The keep-fill line is routed from the non-safety-related portion of the normal makeup line that is inside the ESW pump building to the highest point in the riser pipe. The safety-related manual keep-fill valve and check valve separate the non-safety-related portions of the keep-fill line to maintain the pressure boundary of the safety-related riser pipe.

The ESW pump is started against a closed discharge isolation valve. The air release valve provides a path to remove the air in the pipe between the check valve 30PEB10/20/30/40 AA204 and the pump. In addition, following a trip of the pump, the air release valves provide a path for air to enter the ESW line to prevent vacuum formation.

The pump discharge isolation valve 30PEB10/20/30/40 AA005 auto-closes on pump stop. Therefore, the leakage path from the tower riser is through the pump discharge isolation valve, and the pump discharge check valve 30PEB10/20/30/40 AA204 in series. These valves are part of the In-service Testing program (U.S. EPR FSAR Tier 2, Section 3.9.6) and will be leak tested in accordance withthe program requirements therein. Additionally, the discharge line from the room cooler is routed so that the highest point in the room cooler discharge line will be higher than the highest point in cooling tower riser pipe. This also prevents draining of fluid through the pump room cooler following a trip of the ESW pump. The vacuum breaker valve 30PEB11 AA191, as shown in U.S. EPR FSAR Tier 2, Table 9.2.1-1 provides a path for air to fill the room cooler discharge line when the ESW pump trips. The discharge line from the room cooler is submerged in the basin. Following a trip of the pump, as the water in the

vertical section of the room cooler discharge line drains to the basin, the vacuum breaker valve provides a path for the air to prevent vacuum formation.

The general protection concept in case of pipe failures in the ESWS with regard to flooding is based on the principle of restricting the consequences to the affected division. In case of significant leakage from an ESWS train in a Safeguard Building (SB), the associated motor-driven ESWS pump discharge isolation valve is automatically closed and the ESWS pump is tripped. ~~Another ESWS train is also put into operation.~~ The detection and isolation signaling is done by safety-related means. The nuclear island drain and vent system (NIDVS) sump level instrument in the non-controlled areas of the SBs provides a MAX alarm in the MCR and isolates the affected ESWS train. No operator action is required to isolate the ESWS in a large flooding event.

Primary overpressure protection on the ESWS side of the CCWS HXs is provided by thermal relief valves. Pressure relief device setpoints for the ESWS are in accordance with ASME Section III.

Secondary overpressure protection on the ESWS side of the CCWS HXs is provided by manual opening of the valve (located upstream of the relief valve) before isolation of the particular HX.

To make sure the performance of the safety-related functions, all manually operated valves in the main lines of the safety-related ESWS divisions are mechanically locked in the proper position.

In-service testing of valves shall be performed as described in Section 3.9.6.3. Leakage rates for boundary isolation valves that require testing are based on ASME OM Code, Subsection ISTC (Reference 3).

A maximum valve leakage criterion will be specified for the safety-related check valves which will be no less stringent than the API-598 metal seated check valve criterion. A hydraulic transient analysis will be performed to confirm the integrity of ESW piping to withstand the effects of water hammer.

In general, butterfly valves are used in the ESWS for isolation (open or closed) service and not for throttling. In those applications where a butterfly valve is used in the ESWS and is subject to substantial throttling service for extended periods of time, design provisions are considered to prevent consequential pipe wall thinning immediately downstream of these valves. Such design provisions include the use of erosion resistant materials, the use of thick wall pipe and installing straight pipe lengths immediately downstream of the affected valves.

For operating trains, the following describes the operation of key system valves:

The ESWS pump discharge isolation valve, 30PEB10/20/30/40 AA005, is normally open when the pump is running. Prior to train startup, the valve is closed. After pump start, the valve opens automatically. The stroke time for the ESWS pump discharge isolation valve allows cooling flow to reach the EDG in less than 120 seconds. The ESWS pump operates at the system setpoint when the valve is in the full open position. Upon receipt of an SI signal, automatic ESW actuation from the CCWS, or automatic ESW actuation from LOOP the ESWS pump discharge isolation valve will automatically receive a signal to open.

The pump minimum flow recirculation valve, 30PEB10/20/30/40 AA002 is normally shut during normal operations. Prior to train startup, the valve is closed. In the event the ESWS pump discharge isolation valve 30PEB10/20/30/40 AA005 fails to sufficiently open after a pump start by the predetermined time interval, the discharge pressure will increase and the minimum flow recirculation valve will open to establish a flow path for water from the pump back to the cooling tower basin, thereby protecting the pump from damage due to overheating. Upon receipt of an SI signal, the pump minimum flow recirculation valve will automatically receive a signal to close.

For the dedicated train, the manual stop-check valve (30PEB80 AA002) is installed on the pump discharge side in the essential service water pump building (ESWPB). The valve and motor-operated minimum flow recirculation valve 30PEB80 AA0015 are controlled such that the recirculation valve opens on a time delay if the stop-check does not open after the dedicated ESW pump starts. This action establishes flow through the recirculation line back to the cooling tower basin, thereby preventing potential pump damage due to overheating/cavitation.

The normal blowdown flow path extends from the ESWS supply header just downstream of the debris filter to the plant waste water retention basin. Flow from the ESWS to the retention basin is established when the ESWS normal blowdown isolation valve opens. The valve positions of the ESW normal blowdown isolation valves, 30PEB10/20/30/40 AA016, are adjusted from the MCR as necessary during normal operations to maintain ESW water chemistry within established limits. The blowdown flow rate and line size are based on evaporation loss from the associated cooling tower and maintaining the number of cycles of concentration in the tower basin. The debris removal line joins the normal blowdown flow path downstream of a check valve in the blowdown line. Upon receipt of an SI signal, the ESW normal blowdown isolation valve automatically receives a signal to close. The blowdown flow path is isolated under DBA conditions.

The dedicated ESW blowdown valve, 30PEB80 AA016, is throttled as necessary during dedicated train operation to maintain ESW water chemistry within established limits.

The emergency blowdown line extends from the normal blowdown line to its terminal end just outside the ESWPB. The safety-related flow path is established when the ESWS emergency blowdown isolation valve is opened by the operator. During normal operations, this flow path is used only in the event of a failure of the normal blowdown flow path. The cooling tower emergemcy blowdown system isolation valves, 30PEB10/20/30/40 AA003, are motor operated valves capable of being throttled to obtain the desired blowdown flow rate based on water chemistry analysis results. Upon receipt of an SI signal, the cooling tower emergency blowdown system isolation valves automatically receive a signal to close.

The debris filter blowdown isolation valve, 30PEB10/20/30/40 AA015, is cycled open and shut automatically as necessary during normal operations to provide a flow path for debris removal from the debris filter during the automatic backwash cycle. The pressure relief backwash process of the filter is initiated by either the signal of the differential pressure measuring system, a timer, after the start of the ESW pump, or via manual operator initiation. The debris filter blowdown isolation valve opens and the drive motor is energized. Upon receipt of an SI signal, the debris filter blowdown isolation valve will automatically receive a signal to close.

The debris filter emergency blowdown isolation valve, 30PEB10/20/30/40 AA004, is cycled open and shut automatically as necessary during abnormal operations to provide a safety-related flow path for debris removal from the debris filter during the automatic backwash cycle. Upon receipt of an SI signal, the debris filter emergency blowdown isolation valve will automatically receive a signal to close. The basin is filled with high quality water during the first 72 hours post DBA; however, periodic filter blowdown may be necessary during the period between the first 72 hours and 30 days.

The dedicated train debris filter blowdown isolation valve, 30PEB80 AA009, is cycled open and shut as necessary during dedicated train operations to provide a flow path for debris removal from the debris filter during the automatic backwash cycle.

The ESWS cooling tower return isolation valve, 30PED10/20/30/40 AA010, is normally open when the pump is running. The cooling tower return isolation valves are positioned by the operator in the MCR as necessary to maintain desired ESW cold water temperature. The stroke time for the ESWS return header isolation valve from a full closed position allows cooling flow to reach the EDG in less than 120 seconds. The ESWS pump operates at the system setpoint when the valve is in the full open position. Upon receipt of an SI signal, the ESWS cooling tower return isolation valve automatically receives a signal to open.

The ESWS cooling tower bypass isolation valve, 30PED10/20/30/40 AA011, is normally shut during normal operations. The return isolation valve and the bypass valve will be repositioned automatically under low heat load/low ambient conditions

to help maintain ESWS basin water temperature above established limits. The valves are positioned by the operator in the MCR as necessary to maintain desired ESW cold water temperature. Upon receipt of an SI signal, the ESWS cooling tower bypass isolation valve automatically receives a signal to close.

The ESWS normal makeup water isolation valve, 30PED10/20/30/40 AA019, is cycled open and shut as necessary during normal operations to maintain cooling tower basin water level within the established operating band. Upon receipt of an SI signal, the valve shuts automatically, isolating the non-safety-related normal makeup water system from the safety-related emergency makeup system.

The ESWS emergency makeup water isolation valve, 30PED10/20/30/40 AA021, is shut during normal operations. Upon receipt of an SI signal, the valve opens automatically to establish the flow path from the ESWS emergency makeup system to the tower basin. After 72 hours have elapsed under DBA conditions, the emergency makeup water system isolation valves (modulate) the flow of emergency makeup water to the cooling tower basins to maintain tower basin water levels within the established operating limits. The limits prevent overfilling and maintain the level higher than the minimum necessary for safe pump operation through the receipt of control inputs from the tower basin water level controls. If the water level in the cooling tower basin continues to rise, an alarm will alert the operator at the high level. Operator action will be performed to remove water from the cooling tower basin through the use of the safety-related emergency blowdown to maintain water level. In accordance with U.S. EPR FSAR Tier 2, Section 9.2.5, a COL applicant that references the U.S. EPR design certification will provide site specific information for the UHS support systems including emergency makeup water.

A keep-fill line and monitoring of water level in the tower riser pipe of a standby train is administratively controlled to keep the water level in the riser above the pre-determined minimum. The keep-fill line delivers water from the normal makeup supply to the top of the UHS tower riser pipe through a manually-operated safety-related boundary isolation valve (30 PEB 10/20/30/40 AA024) and check valve 30 PEB 10/20/30/40 AA025). Level is monitored in the tower riser and level indication is provided in the MCR and locally at the keep-fill valve. The non-safety related function of the tower keep-fill line is to replenish water in the cooling tower riser pipe that is lost due to leakages in the system thereby minimizing potential water hammer effects during train startup due to air voids in the piping. The safety-related manual keep-fill valve and check valve separates the non-safety-related portions of the keep-fill line to maintain the pressure boundary of the safety-related riser pipe. This design provision eliminates the need for the start of the whole train by operator action.

The ESWS air release valve, 30PEB10/20/30/40 AA190, is integral to ESW debris filter and opens and shuts as necessary during normal operations to provide a flow path to remove air from the system.

The ESWS vacuum relief valve, 30PEB11/21/31/41 AA191, opens and shuts as necessary during normal operations to provide an air flow path for vacuum relief.

9.2.1.4 Operation

9.2.1.4.1 Normal Operating Conditions

Safety-Related Divisions

The ESWS supply is vital for all phases of plant operation and is designed to provide cooling water both during power operation and shutdown of the plant. During normal plant operation, two of four pumps are in operation with the remaining divisions in standby. The pumps are switched over periodically, thus changing the operational divisions.

The four divisions are filled and vented prior to operation. Under normal system operating conditions on a per division basis, the ESWS pump is in operation, the differential water level across coarse and fine screens is within limit, and the debris filter is functioning and all the valves in the main line are open. If the differential pressure across the debris filter reaches the predefined setpoint, automatic filter cleaning is initiated. In addition, if the differential water level across coarse and fine screens reaches alarm level, inspection and clearing of screens is initiated.

During standby, the divisions not in operation are aligned for normal operation (manual valves in the main line are open) and the system is filled and vented. The debris filter is in standby and ready to start. The system can be started manually from the main control room or automatically. In all cases, only the start signal needs to be actuated; preparatory measures are not necessary. The stopping of a particular division is performed manually.

Four ESWS divisions are normally running to achieve cold shutdown in the minimum time. Only two divisions are required to achieve cold shutdown.

During refueling, when the core is almost discharged to the Fuel Building (FB), two or three ESWS divisions are in operation. During this phase, maintenance can be performed on one division. When the core is totally offloaded and in the FB, only two ESWS divisions are required to be in operation.

Non-Safety-Related Division

The dedicated ESW division is not in use during normal plant operation. The ESW side of the dedicated CCWS HX is separated from the rest of the system. The ESW inlet and outlet isolation valves are closed and this section is filled with demineralized water to prevent corrosion. The rest of the system is filled with site specific ESW fluid.

The dedicated ESW cooling chain is activated in case of an SA. This requires closing the ESW isolation valve downstream of CCW HX #4, manually opening the dedicated ESW isolation valves upstream and downstream of the dedicated CCW HX, and manually starting the dedicated ESW pump.

Dedicated ESWS motor-operated components are capable of being supplied by a standby EDG or a station blackout diesel generator (SBODG) that is provided as an alternate ac power source.

9.2.1.4.2 Abnormal Operating Conditions

Non-LOCA Design Basis Event During Power Operation

The ESWS operates as described for normal operating conditions, supplying the operating CCWS divisions as required.

Loss of Offsite Power

In case of loss of offsite power (LOOP), at least three of the safety-related ESWS divisions are available assuming one division is not available due to preventive maintenance. The four ESWS pumps belonging to the four safety-related divisions have power supplied by the EDGs.

In case of LOOP, the dedicated ESWS division is available but in standby condition. Power is supplied by the EDG. The dedicated ESWS division is also capable of being powered by the SBODGs so that the function is available even in case of LOOP with simultaneous loss of all EDGs.

If one safety-related ESWS pump fails during normal operation, a switchover to the other ESWS division is carried out. This switchover is done automatically for the entire cooling chain.

A spurious closure of the isolation valve in a safety-related ESWS division has the same consequences as the failure of the respective pump for that division.

A failure of the cleaning function of the debris filter in a safety-related division is monitored by the elevated differential pressure or function alarm. In this case, the operator initiates a division switchover.

A blockage of the fine screen in a safety-related division is monitored by the elevated differential level or function alarm. A blockage of the coarse or fine screens will result in an operator-initiated division switchover.

9.2.1.5 Safety Evaluation

The ESWS pump buildings are designed to withstand the effects of earthquakes, tornadoes, hurricanes, floods, external missiles, and other natural phenomena. Section 3.3, Section 3.4, Section 3.5, Section 3.7 and Section 3.8 provide the basis for the adequacy of the structural design of these structures.

The ESWS is designed to remain functional after a safe shutdown earthquake (SSE). Section 3.7 and Section 3.9 provide the design loading conditions that are considered. Section 3.5, Section 3.6 and Section 9.5.1 provide the hazards analyses to verify that a safe shutdown, as outlined in Section 7.4, can be achieved and maintained.

The four division design of the ESWS provides complete redundancy; therefore a single failure will not compromise the ESWS system safety-related functions. Each division of ESWS is independent of any other division and does not share components with other divisions or with other nuclear power plant units.

Considering a single failure and preventative maintenance, two ESW divisions may be lost, but the ability to achieve the safe shutdown state under DBA conditions can be reached by the remaining two ESWS divisions. In case of LOOP the four ESW pumps have power supplied by their respective division EDGs.

During SAs, containment heat is removed by the dedicated cooling chain consisting of the severe accident heat removal system (SAHRS), dedicated CCWS, and dedicated ESWS. This cooling chain is manually actuated. In case of loss of the dedicated ESWS division, the SAHRS cooling chain is lost. This condition is outside the DBA.

In the event of an LOCA during power operations, the engineered safety features system (ESFS) (refer to Section 7.3) initiates a safety injection and containment isolation phase 1 signal. The ESWS divisions previously not in operation are automatically started by the PS.

9.2.1.6 Inspection and Testing Requirements

The ESWS is initially tested with the program given in Section 14.2, Test # 48.

The installation and design of the ESWS provides accessibility, as described in U.S. EPR FSAR Tier 2, Section 6.6.2, for the performance of periodic ~~inservice~~ inspection and testing, including inservice inspection. Periodic inspection and testing of all safety-related equipment verifies its structural and leak tight integrity and its availability and ability to fulfill its functions. Inservice inspection and testing requirements are in accordance with Section XI of the ASME BPV Code and the ASME OM Code.

U.S. EPR FSAR Tier 2, Section 3.9 and Section 6.6 outline the inservice testing and inspection requirements. Refer to U.S. EPR FSAR Tier 2, Section 16.0, Surveillance Requirement (SR) 3.7.8 for surveillance requirements that verify continued operability of the ESWS.

Pursuant to the recommendations included in Generic Letter 89-13 (Reference 2), the design of safety-related portions of the ESWS considers the potential for capability and performance degradation and subsequent system failure due to siltation, erosion, corrosion, protective coating failure, and the presence of organisms that subject the system to microbiological influenced corrosion, as well as macro-fouling. A combination of design means, such as chemical treatment to reduce biological challenges; provisions to permit regular, periodic inspections, preventative maintenance, testing and performance trending; the use of best design practices for piping material selection and layout to minimize erosion and corrosion; and administrative controls in the form of operating, maintenance and emergency procedures, provide a level of assurance that the ESWS is able to perform its safety function when required.

Consistent with GL 89-13, design provisions of the ESWS accommodate performing the following:

- Identify and reduce the incidence of flow blockage problems caused from biofouling.
- Verify the heat transfer capability of safety-related heat exchangers connected to or cooled by the ESWS.
- Conduct routine inspection and maintenance activities of ESWS piping and components to provide assurance that corrosion, erosion, protective coating failure, silting, and biofouling cannot degrade the performance of safety-related systems supplied by ESW.

9.2.1.7 Instrumentation Requirements

Instrumentation is provided in order to control, monitor and maintain the safety-related and non-safety-related functions of the ESWS.

9.2.1.7.1 ESWS Safety Related I&C Functions

9.2.1.7.1.1 ESW Actuation from SIS

Upon receipt of a safety injection signal, the four ESWS trains are started to supply the CCWS heat exchangers, EDG heat exchangers and ESW pump room coolers.

For this function, the following ESW actuations are automatically initiated by the PS:

- The ESWS pumps 30PEB10/20/30/40 AP001 are started.

Next File

- The ESW pump discharge isolation valves 30PEB10/20/30/40 AA005 are opened.
- The ESWS cooling tower return isolation valves 30PED10/20/30/40 AA010 are opened.
- The ESWS normal blowdown isolation valves 30PEB10/20/30/40 AA016 are closed.
- The cooling tower emergency blowdown system isolation valves 30PEB10/20/30/40 AA003 are closed.
- The ESWS debris filter emergency blowdown isolation valves 30PEB10/20/30/40 AA004 are closed.
- The debris filter blowdown isolation valves 30PEB10/20/30/40 AA015 are closed.
- The ESWS cooling tower bypass isolation valves 30PED10/20/30/40 AA011 are closed.
- The ESWS normal makeup water isolation valves 30PED10/20/30/40 AA019 are closed.
- The ESWS pump recirculation isolation valves 30PEB10/20/30/40 AA002 are closed.
- The ESWS emergency makeup water isolation valves 30PED10/20/30/40 AA021 are opened.
- UHS fans 30PED10/20/30/40 AN001 and 30PED10/20/30/40 AN002 are automatically operated at full speed.

9.2.1.7.1.2 Automatic ESW Actuation from CCWS

To ensure cooling of the safety related users of the NI cooling chain, the ESWS is automatically actuated when the associated CCWS train is started. The following actions occur:

- The ESW pump 30PEB10/20/30/40 AP001 is started. If one ESWS pump fails during normal operation, a switchover to the other ESWS train is carried out. This switchover is done automatically for the entire cooling train and is initiated by the CCWS Switchover sequence.
- The ESW pump discharge isolation valve 30PEB10/20/30/40 AA005 is opened.
- UHS fans 30PED10/20/30/40 AN001 and 30PED10/20/30/40 AN002 are started.

9.2.1.7.1.3 Automatic ESW Actuation from LOOP

To ensure cooling of the safety related EDG (30XJA10/20/30/40), the ESWS is automatically actuated by a LOOP signal. The ESW system is started according to the EDG load sequence. The following actions occur:

- The ESW pump 30PEB10/20/30/40 AP001 is started.
- The ESW pump discharge isolation valve 30PEB10/20/30/40 AA005 is opened.
- UHS fans 30PED10/20/30/40 AN001 and 30PED10/20/30/40 AN002 are started.

9.2.1.7.1.4 Manual ESW Actuation

The ESWS pumps 30PEB10/20/30/40 AP001 and UHS cooling tower fans 30PED10/20/30/40 AN001 and 30PED10/20/30/40 AN002 can be started manually from the MCR and/or RSS and the ESWS pump discharge isolation valves 30PEB10/20/30/40 AA005 and ESWS cooling tower return isolation valves 30PED10/20/30/40 AA010 can be opened manually from the MCR and/or RSS to cool the plant to cold shutdown conditions following a DBA. This functionality is a backup to the automatic actuation.

~~Upon receipt of a safety injection signal, the following valves will receive a signal to automatically align to their post accident position as indicated:~~

- ~~ESWS normal blowdown isolation valves 30PEB10/20130/40 AA016 (closed).~~
- ~~Cooling tower emergency blowdown system isolation valves 30PEB10/20/30/40 AA003 (closed).~~
- ~~Debris filter blowdown isolation valves 30PEB10/20130/40 AA0l5 (closed).~~
- ~~ESWS cooling tower bypass isolation valves 30PED10/20/30/40 AA011 (closed).~~
- ~~ESWS normal makeup water isolation valves 30PED10/20/30/40 AA019 (closed).~~
- ~~ESWS pump recirculation isolation valves 30PEB10/20/30/40 AA002 (closed).~~
- ~~ESWS pump discharge isolation valves 30PEB10/20/30/40 AA005 (open).~~
- ~~ESWS return header tower isolation valves 30PED10/20/30/40 AA010 (open).~~
- ~~ESWS emergency makeup water isolation valves 30PED10/20/30/40 AA021 (open).~~

9.2.1.7.1.5 Automatic Valve Alignments on Pump Start/Stop

The following valves are automatically re-aligned in response to a pump start/stop:

- ESWS pump discharge isolation valves 30PEB10/20/30/40 AA005 (open/closed).

- ~~ESWS return header isolation valves 30PED10/20/30/40 AA010 (open/closed).~~

9.2.1.7.2 System Monitoring

The ESWS system is monitored for the following parameters:

- Fluid flow rate and pressure downstream of the ESWS pumps and the dedicated ESWS pump.
- Differential pressure at the ESWS and the dedicated ESWS debris filters, CCWS HXs, and Essential Service Water Pump Building Ventilation System (SAQ) room cooler.
- Fluid flow from the CCWS and EDG HXs.
- Temperature of the ESWS and the dedicated ESWS pump discharge.
- Temperature at the outlet of the CCWS and EDG HXs and pump room coolers.
- MOV position status.
- Pump operating status (energized/de-energized)

9.2.1.7.3 System Alarms

- High temperature ESW and dedicated ESW.
- ESW and dedicated ESW pump abnormal.
- Low flow across the CCWS and dedicated CCWS HX.
- High ΔP across the CCWS, dedicated CCWS HX, and SAQ room cooler.
- Low temperature ESW.
- Table —Table 9.2.1-3—Alarm Summary provides additional information.

9.2.1.8 References

1. ASME Boiler and Pressure Vessel Code, Section III: “Rules for Construction of Nuclear Facility Components,” Class 3 Components, The American Society of Mechanical Engineers, 2004.
2. Generic Letter 89-13, NRC Letter to All Holders of Operating Licenses or Construction Permits for Nuclear Power Plants, “Service Water System Problems Affecting Safety-Related Equipment.” U.S. Nuclear Regulatory Commission, July 18, 1989.
3. ASME OM Code, “Code for Operation and Maintenance of Nuclear Power Plants,” The American Society of Mechanical Engineers, 2004 edition.

Table 9.2.1-1—Essential Service Water Design Parameters

Essential Service Water Pump 30PEB10/20/30/40 AP001	
Description	Technical Data
Number	4
Type	Wet Pit Vertical Turbine
Normal Flow Rate	19,340 gpm
Required Pump Head at Normal Flow Rate	185 ft/H_2O
Required Minimum Water Level in the Basin for NPSH and Vortex Suppression	95 inches (~~from~~above suction inlet)
Design Cold (UHS Outlet) Water Temperature, ~~°F,~~ (Max, DBA)	95°F
Max Cooling Tower Basin Temperature Limit during Normal Plant Operation to Verify UHS Performance in a DBA, ~~°F,~~ (Max)	90°F
System Design Pressure	190 psig
System Design Temperature	135°F

Table 9.2.1-2—Dedicated Essential Service Water Design Parameters

Dedicated Essential Service Water Pump 30PEB80 AP001	
Description	Technical Data
Number	1
Type	Wet Pit Vertical Turbine
Normal Flow Rate	2737 gpm
Required Pump Head at Normal Flow Rate	150 ft/H_2O
System Design Pressure	100 psig
System Design Temperature	150°F
Required Minimum Water Level in the Basin for NPSH and Vortex Suppression	46 inches (~~from~~above suction inlet)

Table 9.2.1-3—Alarm Summary

MCR / RSS	Division	Setpoint Name	Function
CCW HX differential pressure Hi	1/2/3/4	Max 1	Alarm alerts operator to high CCW HX DP
CCW HX Lo flow	1/2/3/4	Min 1	Alarm alerts operator to low CCW HX Flow
EDG coolers Lo flow	1/2/3/4	Min 1	Alarm alerts operator to low EDG HX Flow
CCW Hx Lo flow + EDG coolers Lo flow = Pump Discharge Flow	1/2/3/4	Min 1 Min 2	Min 1: Alarm (Pump discharge Flow low) Min 2: Alarm (Pump discharge Flow low-low) and Pump Trip
SAQ room cooler differential pressure ESW side	1/2/3/4	Max 1	Max 1: Alarm alerts operator of high DP
ESW debris filter differential pressure Hi	1/2/3/4	Max 4 Max 3 Max 2 Max 1	Max 4: Alarm and Pump Trip Max 3: Alarm alerts operator to filter trouble/DP too high –operator initiates division switchover Max 2: Auto-Start Strainer Motor (Backwash) Max 1: Status display in MCR
ESW pump abnormal (bearing temperature Hi)	1/2/3/4	Max 2 Max 1	Max 2: Alarm and Pump Trip Max 1: Alarm alerts operator to bearing trouble
ESW pump discharge pressure Hi/Lo	1/2/3/4	Max 2 Max 1 Min 1 Min 2	Max 2: Alarm and Pump Trip Max 1: Alarm alerts operator of high discharge pressure Min 1: Alarm (if Pump is Running) Min 2: Alarm alerts operator of Train Switchover Sequence (if Pump is Running)
Cooling tower basin temperature Hi-Hi	1/2/3/4	Max 2	Alarm and Part of the System Start Permissive (if below Max 2)
Cooling tower basin temperature Hi	1/2/3/4	Max 1	Alarm alerts operator to position cooling tower return isolation valve and/or adjust fan speed
Cooling tower temperature Lo	1/2/3/4	Min 1	Alarm alerts operator to position cooling tower return isolation valve and/or tower bypass valve and/or adjust fan speed

Table 9.2.1-3—Alarm Summary (Continued)

MCR / RSS	Division	Setpoint Name	Function
Cooling tower basin temperature Lo-Lo	1/2/3/4	Min 2	Alarm alerts the operator to manually place the affected ESW train into operation and/or adjust fan speed and/ or direction
Cooling tower basin water level Hi-Hi	1/2/3/4	Max 2	Alarm alerts operator to remove basin inventory
Cooling tower basin water level Hi	1/2/3/4	Max 1	Auto-Close Normal Makeup Isolation Valve
Cooling tower basin water level Lo	1/2/3/4	Min 1	Auto-Open Normal Makeup Isolation Valve
Cooling tower basin water level Lo-Lo	1/2/3/4	Min 2	Alarm alerts operator to insufficient makeup
Cooling tower basin water level Lo–Lo-Lo	1/2/3/4	Min 3	Alarm and: -Part of the System Start Permissive (if >Min2) -Pump Start Permissive (if >Min2) for Emergency Makeup System
Cooling tower basin water level Lo–Lo–Lo-Lo	1/2/3/4	Min 4	Alarm and Pump Trip-Trouble with Emergency Makeup System
Cooling tower riser level	1/2/3/4	Min 1 Min 2	Alarm alerts operator to low water level in tower riser – Operator initiates refill actions Alarm alerts operator to leakages in the system - Operator to start ESW pump

~~Table 9.2.1-3—Alarm Summary~~

~~Alarm Name~~	~~Division~~	~~Setpoint Name~~
~~CCW Hx differential pressure Hi~~	~~1/2/3/4~~	~~Max 1~~
~~CCW Hx Lo flow~~	~~1/2/3/4~~	~~Min 1~~
~~EDG coolers Lo flow~~	~~1/2/3/4~~	~~Min 1~~
~~SAQ room cooler differential pressure ESW side~~	~~1/2/3/4~~	~~Max 1~~
~~ESW temperature Hi~~	~~1/2/3/4~~	~~Max 1~~
~~ESW temperature Hi—Hi~~	~~1/2/3/4~~	~~Max 2~~
~~ESW temperature Low~~	~~1/2/3/4~~	~~Min 1~~
~~ESW debris filter differential pressure Hi~~	~~1/2/3/4~~	~~Max 1~~
~~ESW debris filter differential pressure Hi—Hi~~	~~1/2/3/4~~	~~Max 2~~
~~ESW pump abnormal~~	~~1/2/3/4~~	~~Min1 / Max 1~~
~~Dedicated CCW Hx differential pressure Hi~~	~~Dedicated~~	~~Max 1~~
~~Dedicated CCW Hx Lo flow~~	~~Dedicated~~	~~Min 1~~
~~Dedicated ESW temperature Hi~~	~~Dedicated~~	~~Max 1~~
~~Dedicated ESW temperature Hi—Hi~~	~~Dedicated~~	~~Max 2~~
~~Dedicated ESW pump abnormal~~	~~Dedicated~~	~~Min 1 / Max 1~~
~~Cooling tower basin water level Hi—Hi~~	~~1/2/3/4~~	~~Max 2~~
~~Cooling tower basin water level Hi~~	~~1/2/3/4~~	~~Max 1~~
~~Cooling tower basin water level Lo~~	~~1/2/3/4~~	~~Min 1~~
~~Cooling tower basin water level Lo—Lo~~	~~1/2/3/4~~	~~Min 2~~

Figure 9.2.1-1—Essential Service Water System Piping & Instrumentation Diagram
Sheet 1 of 4

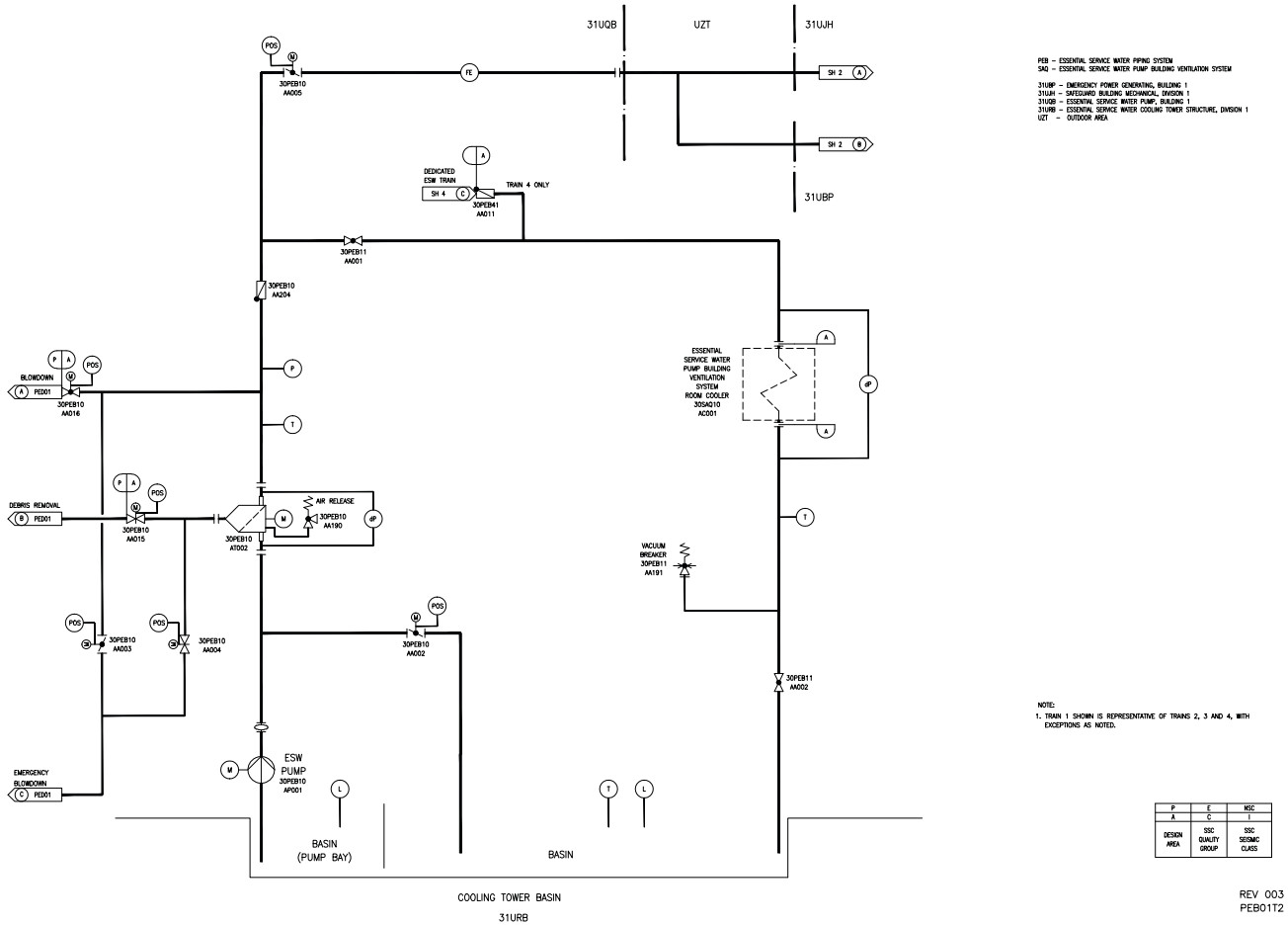

PEB – ESSENTIAL SERVICE WATER PIPING SYSTEM
SAQ – ESSENTIAL SERVICE WATER PUMP BUILDING VENTILATION SYSTEM

31UBP – EMERGENCY POWER GENERATING, BUILDING 1
31UJH – SAFEGUARD BUILDING MECHANICAL, DIVISION 1
31UQB – ESSENTIAL SERVICE WATER PUMP, BUILDING 1
31URB – ESSENTIAL SERVICE WATER COOLING TOWER STRUCTURE, DIVISION 1
UZT – OUTDOOR AREA

NOTE:
1. TRAIN 1 SHOWN IS REPRESENTATIVE OF TRAINS 2, 3 AND 4, WITH EXCEPTIONS AS NOTED.

P	E	NSC
A	C	I
DESIGN AREA	SSC QUALITY GROUP	SSC SEISMIC CLASS

REV 003
PEB01T2

Figure 9.2.1-1—Essential Service Water System Piping & Instrumentation Diagram
Sheet 2 of 4

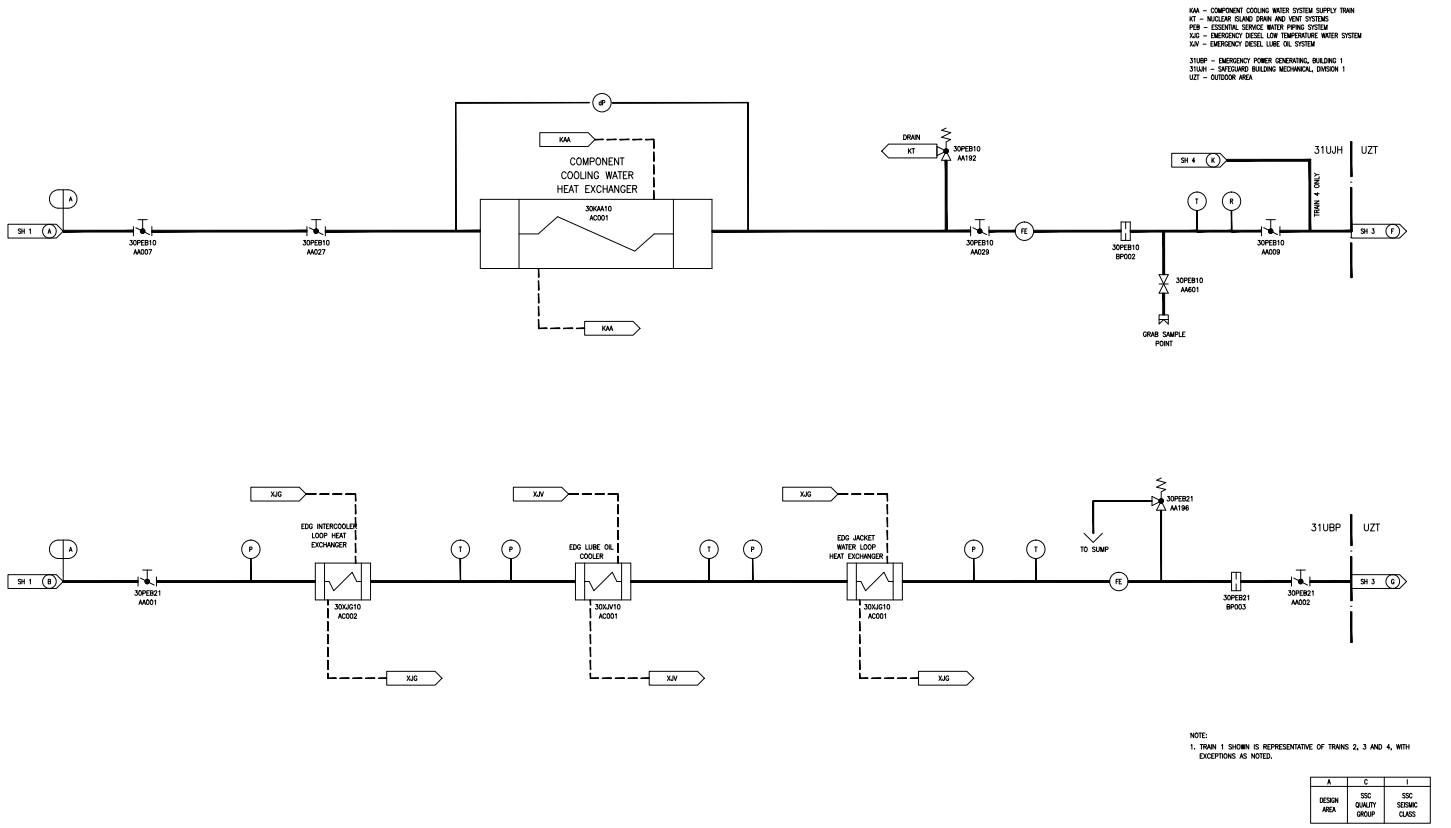

Figure 9.2.1-1—Essential Service Water System Piping & Instrumentation Diagram
Sheet 3 of 4

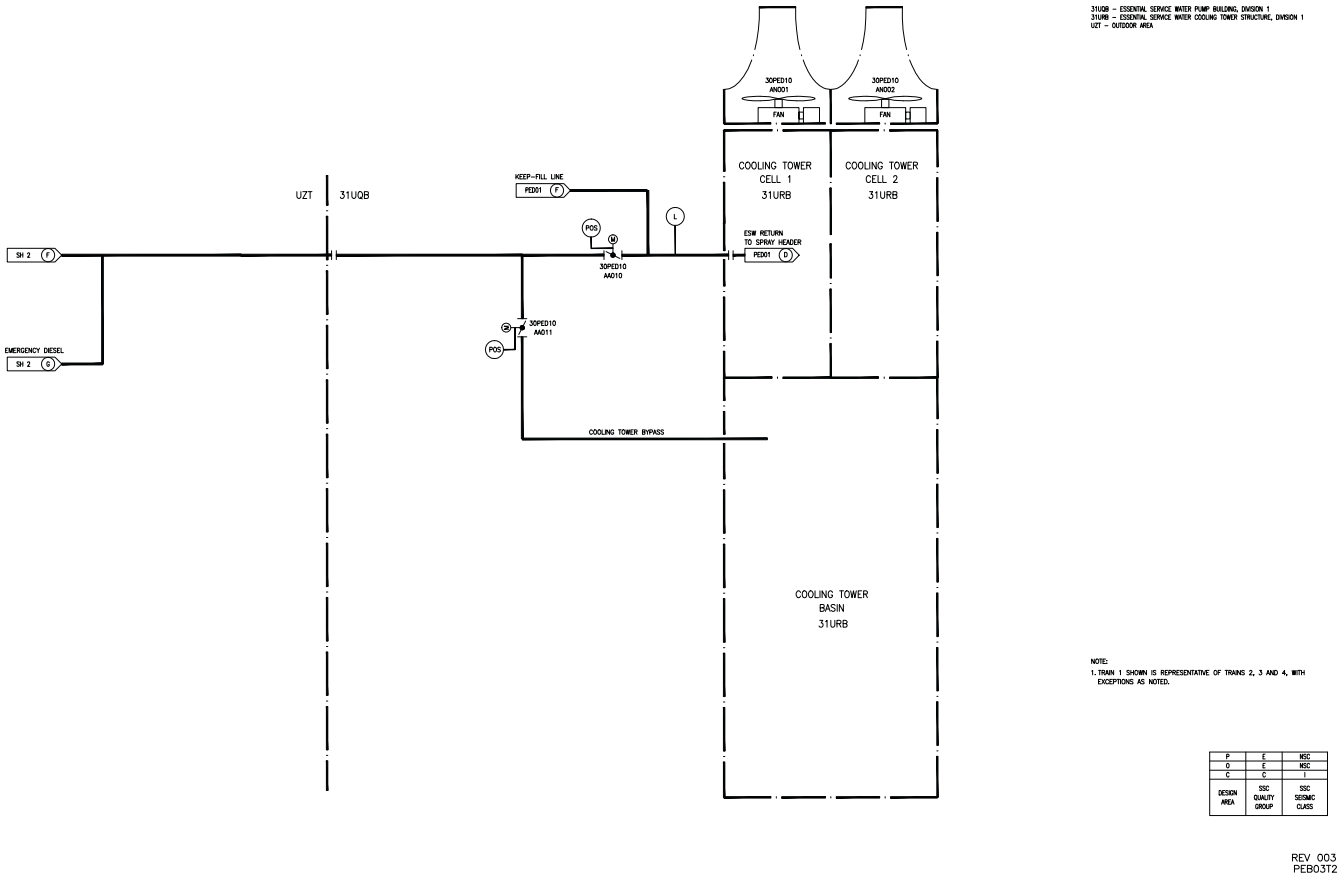

Figure 9.2.1-1—Essential Service Water System Piping & Instrumentation Diagram
Sheet 4 of 4

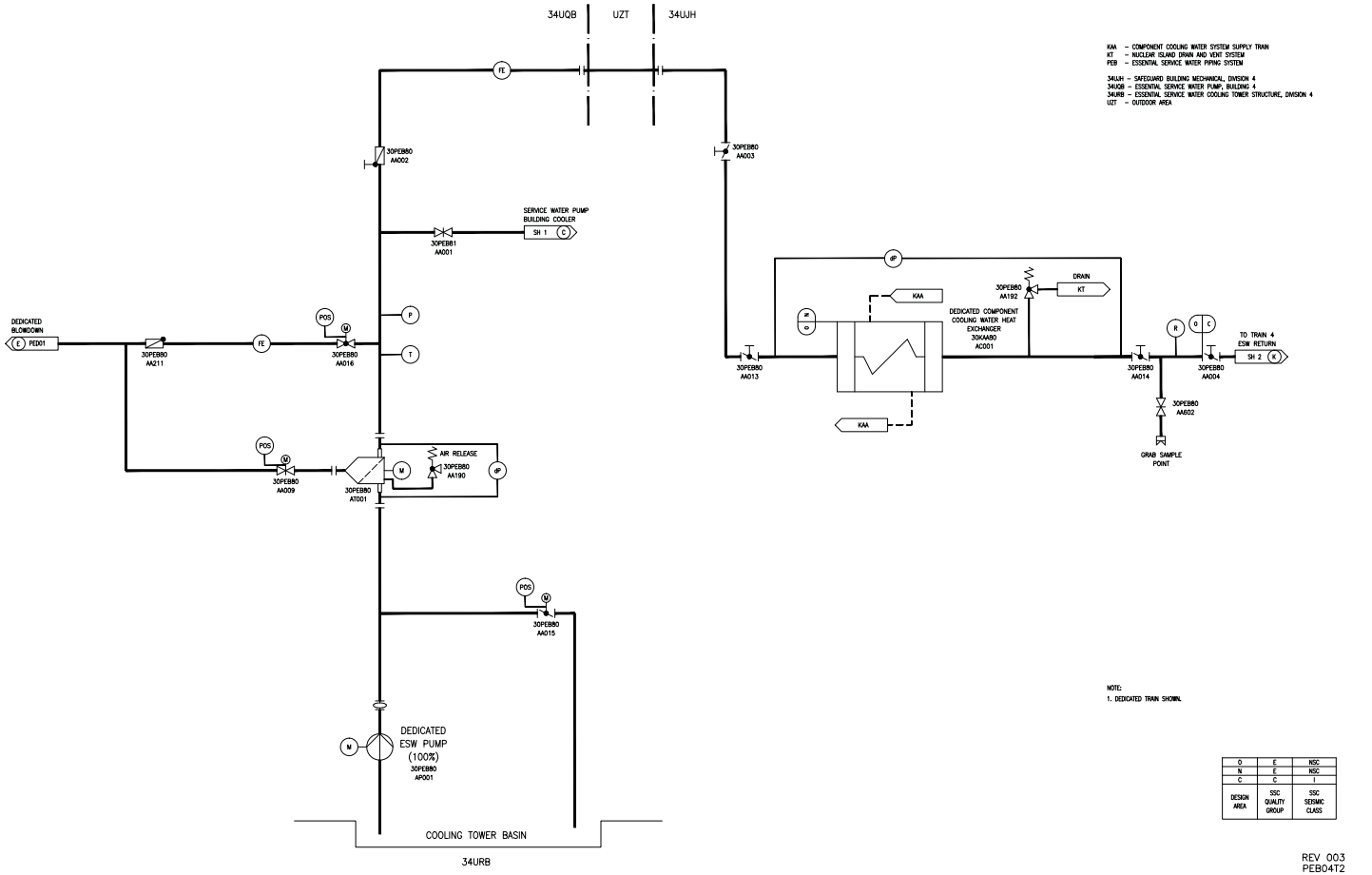

Next File

9.2.2 Component Cooling Water System

The component cooling water system (CCWS) is a closed loop cooling water system that, in conjunction with the essential service water system (ESWS) and the ultimate heat sink (UHS), removes heat generated from the plants safety-related and non-safety components connected to the CCWS. Heat transferred by these components to the CCWS is rejected to the ESWS via the component cooling water heat exchangers (HX).

The four safety-related trains of the CCWS cool the safety-related equipment, as required, during all phases of operation. Two non-safety-related branches of the CCWS cool the common users located inside the Fuel Building (FB), Reactor Building (RB), Radioactive Waste Processing Building (RWB), and Nuclear Auxiliary Building (NAB). The four independent safety-related trains provide enough capability that the loss of one train from a single component failure, with a second train down for maintenance, will not impair the ability of the CCWS to meet its safety-related functional requirements.

One additional non-safety-related train comprises the dedicated CCWS that cools the severe accident heat removal system (SAHRS).

The CCWS fluid serves as a barrier preventing radioactive fluid from the components it cools from leaking into the environment. It also serves as a barrier against the leakage of untreated service water into the containment or reactor systems.

9.2.2.1 Design Bases

The CCWS safety-related trains are:

- Protected from the effects of natural phenomena;
  - Earthquakes, tornadoes, hurricanes, floods, and external missiles.
  - Designed to function following such events (GDC 2).
- Designed to the Seismic Category assigned by RG 1.29 (Seismic Category I) and therefore will remain functional after a safe shutdown earthquake (SSE) (GDC 2).
- Designed to remain functional in spite of the postulated hazards of internal missiles, pipe whipping and discharging fluids (GDC 4).
- Not shared among nuclear power units (GDC 5).
- Designed to remain functional despite a single active component failure coincident with the loss of either the offsite or onsite power source (GDC 44).
- Designed to permit appropriate periodic inspection of important components to provide for integrity and capability of the system (GDC 45).

- Designed to permit appropriate periodic pressure and functional testing to make sure of (1) the structural and leak-tight integrity of its components, (2) the operability and the performance of the active components of the system, and (3) the operability of the system as a whole and, under conditions as close to the design as practical, the performance of the full operational sequence that brings the system into operation for reactor shutdown and for loss of coolant accidents (LOCA), including operation of applicable portions of the protection system and the transfer between normal and emergency power sources (GDC 46).

- Designed to permit isolation of lines that penetrate the primary containment to maximize containment isolation integrity (GDC 57).

- Designed to provide acceptable performance for all environments anticipated under normal, testing, and design basis conditions in compliance with the requirements of 10 CFR 50.49.

- Supplied by highly reliable and diverse power and control systems in conformance with the guidance of RG 1.32.

- Provides cooling to the thermal barrier of the reactor coolant pump (RCP) seals during all plant operating modes when the RCPs are running. (Thermal barrier cooling does not isolate due to an accident signal.)

The non-safety-related dedicated CCWS train is available on demand, in the unlikely event of a severe accident, to cool the SAHRS.

9.2.2.2 System Description

9.2.2.2.1 General Description

The CCWS design complies with applicable industry codes and standards, and regulatory requirements, commensurate with the function of each of the safety-related components.
As such, the CCWS components are fabricated, installed, and maintained in compliance with:

- ASME Boiler and Pressure Vessel (BPV) Code Section III, (Reference 1) Class 2 and 3 components.

- ASME Power Piping Code B31.1 (Reference 2).

- ASME BPV Code Section VIII, (Reference 3) non-safety-related components.

- Electrical redundancy and separation as specified in IEEE Std 603 (Reference 4).

- Seismic Category I and important-to-safety components as defined in RG 1.29.

- Environmental qualification as specified in 10 CFR 50.49.

The CCWS is a four train system configured to allow sharing of operational and safety-related users among the trains during normal operation, while always maintaining train separation with rapid isolation capability of the non-safety-related users in the event of an accident. The trains form pairs; trains 1 and 2 form one pair, and trains 3 and 4 the other pair. During normal operation, one or both trains in each associated pair can be in operation to cool the two common sets of users. Depending on the system user requirements, heat loads, and flow rates, and depending on the existing plant operating condition, the CCWS may have two, three, or all four trains in operation. System design parameters and flow requirements are listed in Table 9.2.2-1—CCWS Design Parameters and Table 9.2.2-2—CCWS User Requirements Summary.

Trains may be added or dropped as necessary to maintain the CCWS HX outlet temperature above the minimum required and below the maximum allowed and maintain the individual CCWS pump steady-state operating flow between the minimum required and the maximum allowed values. Idle CCWS trains are available and isolated from the common headers to provide safety injection system (SIS) availability if necessary. Maintenance on a CCWS train during power operation is possible.

During normal operation and design basis events, the CCWS provides the cooling function for the safety injection system/residual heat removal system (SIS/RHRS) and the safety chilled water system (SCWS) of divisions 2 and 3. The CCWS also transfers decay heat from the fuel pool cooling system (FPCS) whenever fuel is stored in the spent fuel pool. The CCWS additionally cools the thermal barriers of the RCP seals during all plant operating modes when the RCPs are running. Upon receipt of a containment isolation signal, the CCWS responds to protect the integrity of the containment pressure boundary.

During normal operation the temperature at the outlet of the CCWS heat exchanger must be greater than 59°F and lower than 100.4°F. During a DBA, CCWS heat exchanger outlet temperature must be lower than 113°F.

The expected CCWS pump suction temperatures for the various operational alignments are enveloped by a temperature of 190°F. The 190°F temperature is conservatively based on CCWS heat exchanger DBA inlet temperature (181°F) plus margin. The 181°F inlet temperature results from a maximum allowed CCWS heat exchanger outlet temperature 113°F for DBA conditions.

The CCWS flow rate is automatically controlled for those users which have been determined to have a limited operating temperature range for support of stable operation, while less temperature-sensitive users remain at a fixed flow resistance during all operating conditions. These fixed flow rates are adjusted once during plant commissioning with the system in its most demanding flow configuration (system flow

balancing), and is reaffirmed regularly throughout the plant life by periodic surveillance, to make sure there is adequate required user flow for all operating conditions. It is not expected that the CCWS flow balance will require adjustment after the initial flow balance has been established.

For the accident analysis it is assumed that one CCWS train is unavailable due to maintenance or other activity and a second train fails to perform its function, leaving only two trains available for the event. Upon receipt of a safety injection and containment isolation Stage 1 actuation, the reactor protection system starts the CCWS pumps and opens the low head safety injection/residual heat removal (LHSI/RHR) isolation valves (CCWS flow to the LHSI/RHR HXs and LHSI pump coolers in trains 2 and 3) of the trains not initially in operation. The non-safety-related common users outside of the RB and the containment ventilation and reactor coolant drain tank (RCDT) cooler inside the RB are isolated. A subsequent containment isolation Stage 2 signal isolates the RCP and CVCS loads inside the RB except for the RCP seals thermal barrier coolers.

For the analysis, the accident is assumed to occur with coincident loss of offsite power (LOOP). The loss of one train is assumed to occur due to single failure, the most limiting of which is loss of one electrical division. This loss also results in the incidental loss of the associated emergency core cooling system (ECCS) and ESWS trains. This sequence is detailed in Chapter 15. Throughout accident mitigation and recovery, one of the remaining available CCWS trains cools the LHSI/RHR HX and the other provides additional cooling to the remaining safety loads, with both CCWS trains cooled by their associated ESWS trains.

Leaks in the CCWS, either in or out, will be apparent from various indications, and must be promptly isolated for repair or other corrective action. For instance, leakage of reactor coolant into the CCWS from an RHR HX tube, RCP seal thermal barrier, or other source is identified by increased activity in the CCWS fluid as detected by a continuous monitor or routine sampling, and is also indicated by an unexpected increasing level in the surge tank. The RCP thermal barrier leakage is detected by indication of a high outlet flow from the barrier or an elevated return temperature (or both). The operational pressure gradient of the cooling chain makes in-leakage of service water unlikely. Out-leakage from the system is indicated by an unexpected decrease in surge tank level, indicated by a noticeable increase in automatic makeup flow, visible leakage in the accessible areas or change in reactor coolant chemistry identified during routine sampling. For significant out-leakage from the CCWS, a rapid drop of the CCW level in the corresponding surge tank would trigger automatic inhibition of common users transfer of that train on sufficiently low level, and subsequent isolation of the common header upon reaching the low level isolation setpoint. This conserves the system capacity to cool the safety-related SIS users directly associated with the CCWS train. The system configuration also enables all

such leaks to be readily isolated to prevent release of radioactive fluid, excessive dilution or chemical contamination of the reactor coolant.

CCWS equipment that provides cooling to the SIS/RHRS; spent fuel pool; reactor coolant pump (RCP), including the thermal barrier; safety chillers; and equipment which performs a containment isolation function is classified Seismic Category I. This equipment is located in buildings designed to Seismic Category I requirements.

CCWS users, which are not classified Seismic Category I, can be isolated by Seismic Category I fast-acting isolation valves in case of external hazards.

The Seismic Category I fast-acting isolation valves for non-safety-related CCWS users are hydraulically operated and designed to close in less than 10 seconds. The CCWS common header switchover valves are also fast-acting hydraulically operated valves with a closure time of less than 10 seconds. These switchover valves can be used to isolate the common headers to conserve the system capacity to cool the safety-related SIS users directly associated with the CCWS train. The common header switchover valves (KAA10/20/30/40 AA006/010/032/033) will be designed to fail "as-is" on loss of power to the hydraulic pilot circuit while the isolation valves (KAB50 AA001/004/006 and KAB80 AA015/016/019) for the non-safety-related CCWS users will be designed to fail "closed" on loss of power to the hydraulic pilot circuit.

The four separate, independently powered safety cooling trains of the CCWS, combined with high standards for system design, installation and maintenance, provides assurance that the system will fulfill its safety-related function under the most demanding postulated conditions in spite of its most limiting credible single failure.

During severe accidents, containment heat is removed by the dedicated cooling chain, consisting of the SAHRS, dedicated CCWS, and dedicated ESWS. This dedicated CCWS train is normally in standby operation and is manually started if needed. In case of loss of the dedicated CCWS or ESWS division, the SAHRS cooling chain is lost. This condition is outside the DBA. The dedicated CCWS train supports beyond design basis accident mitigation, and is ~~normally fed from offsite power~~powered by Class 1E electrical Division 4 and is capable of being supplied by the onsite electrical power supplies that are backed by an EDG or SBO diesel generator.

Each physically separated CCWS safety-related train includes:

- A main system pump fitted with a recirculation line and pump motor cooling line.
- An HX, cooled by ESWS, with a parallel flow bypass line with control valve to maintain CCW minimum temperature during cold weather and low-load operation.

- A concrete, steel lined surge tank connected to the pump suction line with sufficient capacity to compensate for CCWS normal leaks or component draining.
- A sampling line with continuous radiation monitor.
- A chemical additive supply line.
- Isolation valves to separate the safety-related train from the common load set.

Each CCWS safety-related train supplies cooling to its respective CCWS and medium head safety injection (MHSI) pumps and motors and associated LHSI/RHR HXs, and trains 2 and 3 cool their respective LHSI pumps and motors. The LHSI pumps and motors of trains 1 and 4 are cooled by the SCWS.

The SCWS chillers for divisions 2 and 3 are supplied by CCWS trains 1 or 2, and 3 or 4, respectively. The piping branch that supplies the SCWS Divisions 2 and 3 is installed between the hydraulically operated common header switchover valve and a manual isolation valve. These manual isolation valves (KAA20/30 AA013/014) are normally open in each CCWS operating mode. These valves are closed only during plant shutdown for maintenance activities on the 1.B and 2.B headers. For operational conveniences, this allows the water-cooled SCWS to be operated. These valves are equipped with position indication in the MCR to notify operators when the valves are closed. This enables continuous availability of the safety chillers during testing or CCWS common header maintenance activity and allows for equitable distribution of operating time for each of the CCWS safety-related trains. The CCWS safety-related trains are shown in Figure 9.2.2-1—Component Cooling Water System Trains 1 through 4.

The non-safety-related operational loads are supplied by two separate isolable headers designated common 1 and common 2. Common 1 may be aligned for service from either safety-related trains 1 or 2, and common 2 may be aligned to safety-related trains 3 or 4. Each common header branches into subheaders further designated “a” and “b” (i.e., common 1.a, 1.b, 2.a, and 2.b). Headers 1.a and 2.a, which cool FPCS trains 1 and 2, respectively, are separate from the other operational loads to provide continued cooling of the spent fuel. Headers 1.b and 2.b cool the remaining operational CCWS loads. Each of the common b-loops is isolable from the associated safety train by two fast-acting hydraulic valves, one installed in each train supply line and the other in the return line.

Common 1.b or 2.b headers cool multiple loads throughout the plant. The loads for each (b) header are summarized in Table 9.2.2-3—CCWS Common Header Users.

RCP 1, 2, 3 and 4 thermal barriers are capable of being cooled from either common header.

Either CCWS common 1b or 2b headers can provide cooling to the RCP thermal barriers. CCWS supply to the RCP thermal barriers is able to withstand a single, active failure or a moderate-energy crack because of the thermal barrier cross tie that provides cooling from either common header, thus allowing cooling supply from any of the four CCWS trains. To meet single failure criteria for the RCP thermal barrier cooling function, the thermal barrier load is required to be cooled by a CCWS common header, which is capable of being connected to two operable CCWS trains. If a CCWS train is out of service for maintenance or because of a single failure, the operators have 72 hours to align RCP thermal barrier cooling to the CCWS common header that has two CCWS supply trains available. If a single failure removes one of the two trains available for that common header, the operator does not have the option to align RCP thermal barrier cooling to a common header with two operable CCWS trains, but there are still two operable CCWS trains available (one for each common header) for thermal barrier cooling. In the event of an RCP thermal barrier fault such as a tube rupture, this single RCP thermal barrier is isolated via inlet and outlet isolation valves in the RCS. A fault of a single RCP thermal barrier does not isolate the entire common header supply to the remaining operable thermal barriers. To maintain strict CCWS train separation for thermal barrier cooling, an interlocking function is required. The containment isolation valves (CIVs) in the RCP thermal barrier cooling path on the supply and return side of CCWS common 1b cannot be opened unless ~~the~~ one of the two CIVs on ~~both the supply and return side of common 2b~~the supply side and one of the two CIVs on the return side are closed and vice-versa.

Thermal barrier cooling is required for each mode of operation, including DBA, where the RCS is pressurized and, therefore, relies on RCP seal integrity to maintain the reactor coolant pressure boundary. Credit is not taken for the CVCS to verify cooling to the RCP shaft seals. In the event that both CCWS flow to the RCP thermal barriers and CVCS seal injection are not available (i.e., if one of the two flows (CCWS or CVCS) is not restored within two minutes) the RCP seals are expected to degrade. Refer to Section 5.4.1.2.1 and Section 8.4.2.6.2 for details related to the RCP seal design and standstill seal, and Section 15.6 for the U.S. EPR LOCA analysis.

The CCWS piping, valves and components supplying the RCP thermal barriers is Seismic Category I, Quality Group C, ASME III Class 3 with the exception of the CIVs and the piping between the CIVs, which are Seismic Category I, Quality Group B, ASME III Class 2.

The four inside motor operated CIVs in the RCP thermal barrier cooling path are provided with uninterruptible power.

The non-safety-related CCWS loads in the NAB and RWB can be quickly isolated from the rest of the CCWS by fast-closing hydraulic valves, as required. The non-safety-related common branches of the CCWS trains are shown in Figure 9.2.2-2—

Component Cooling Water System Common Loop 1, and Figure 9.2.2-3—Component Cooling Water System Common Loop 2.

The design of the Component Cooling Water System (CCWS) minimizes and withstands adverse transients (i.e., water hammer) and meets functional performance requirements for all operating modes including postulated DBA consistent with the guidance for water hammer prevention and mitigation found in NUREG-0927 (Reference 6).

The CCW system design minimizes the potential for dynamic flow instabilities by avoiding high line velocities and specifying valve opening and closing speeds that are low enough to prevent damaging pressure increases.

Vents are provided for venting components and piping at high points in liquid filled systems that can become normally idle and in which voids could occur. These vents are located for ease of operation and testing on a periodic basis. All drains and vents of the CCWS including surge tank overflow are routed to the nuclear island drain and vent systems.

Consideration has been made to avoid voiding, which can occur following pump shutdown or during standby by placing the pumps and CCWS users at an elevation below the water level of the surge tanks. Means are provided for a slow and controlled fill of those portions of the CCW system where voiding could occur after pump shutdown or during standby.

The 10 second closure time of the common header switchover valves and the fast-acting hydraulically operated isolation valves for non-safety-related CCWS users is not considered an instantaneous closure that would create large pressure waves in the system.~~The design incorporates controls and instrumentation to support operating and maintenance procedures to provide adequate measures to avoid water hammer.~~

One non-safety-related train comprises the dedicated CCWS. This train cools the SAHRS train, is supplied demineralized makeup water by the dedicated CCWS injection pump, is cooled by its assigned dedicated ESWS train, and is provided backup power from its assigned station blackout diesel generator (SBODG). The dedicated CCWS train consists of one main pump, one dedicated ESWS-cooled HX, one surge tank connected to the suction line to keep the system filled and maintain adequate head to prevent in-leakage of radioactive fluids from the SAHRS HX, a connection to the demineralized water distribution system with an injection pump for inventory makeup, a chemical additive supply connection, and associated piping, fittings, and valves. The dedicated CCWS surge tank is charged by nitrogen over pressurization, which allows compressible compensation for fluid expansion and contraction and helps provide that any potential coolant leakage is into rather than out of the SAHRS.

The dedicated CCWS train is shown in Figure 9.2.2-4—Component Cooling Water System Dedicated CCWS Trains.

In general, butterfly valves are used in the CCWS for isolation service (open or closed), not for throttling. In those applications where a butterfly valve is used in the CCWS and is subject to substantial throttling service for extended periods, design provisions will prevent consequential pipe wall thinning immediately downstream of the valves. Such design provisions include the use of erosion resistant materials, the use of thick wall pipe, and provision of straight pipe lengths immediately downstream of the affected valves.

All components and piping are carbon steel, except the demineralized feedwater line, which is stainless steel, and the CCWS HX tubes and dedicated CCWS HX tubes which are of a suitable corrosion resistant metal. Table 9.2.2-4—Power Supplies for CCWS Valves identifies the CCWS valves that are provided with normal and alternate power supplies per Section 8.3.1.1.1.

The CCWS has non-seismic piping and components in the following locations:

•Safeguards Buildings (SB) 1, 2, 3 and 4.

•Nuclear Auxiliary Building (NAB).

•Reactor Building Annulus.

•Fuel Building (FB).

•Radioactive Waste Processing Building (RWPB).

Non-seismic portions of the CCWS are isolated from safety-related SSC by either physical separation or by the use of physical barriers. Failure of the non-seismic portions of the CCWS does not adversely affect the control room nor does it result in excessive radiological release.~~The demineralized water distribution system (DWDS) supply to each of the CCWS surge tanks located in SBs 1, 2, 3 and 4 is non-seismic from the DWDS tank up to the Seismic I motor-operated valve (MOV) of the CCWS. A failure in this portion of the CCWS non-seismic piping does not result in excessive radiological release because these portions of the system only carry demineralized quality water. The control room is not adversely affected by a failure of these potions of the CCWS. The nuclear island drain and vent system (NIDVS) floor drains direct demineralized water leakage to the NIDVS sump, which shuts off the demineralized water supply. At the entrance of the FB, the demineralized water MOVs 30GHC73-AA001/002 are protectively closed if the level limit value of the NIDVS sumps is initiated for SBs 1, 2 or the FB. At the entrance of SB 4, the demineralized water MOVs 30GHC78 AA001/002 are protectively closed if the level limit value of the NIDVS sumps is initiated for SB 3 or 4~~.

~~Operational chilled water system (OCWS) users on the CCWS common 1 header in the NAB are supplied by piping and components that are non-seismic. This portion of the CCWS is routed from SB 1 through the Reactor Building Annulus and FB. The non-seismic portion of piping is isolated from the Seismic I piping on the supply to the OCWS users by two Seismic I isolation valves, and one Seismic I isolation valve and one Seismic I check valve on the return from the OCWS users. A failure of this non-seismic portion of the CCWS does not result in excessive radiological release because there is no potential for radioactive in-leakage to the CCWS from the OCWS. The control room is not adversely affected by a failure of the non-seismic CCWS piping in SB 1, Reactor Building Annulus, FB or the NAB because the control room is located in the Seismic I SB 2.~~

~~OCWS, coolant treatment system, coolant degasification system, steam generator blowdown system, liquid waste processing system and solid waste system users on the CCWS common 2 header in the NAB and RWPB are supplied by non-seismic piping and components. This portion of the CCWS is routed from SB 4 into the NAB and the RWPB. This non-seismic portion of piping is isolated from the Seismic I piping on the supply to the users by two Seismic I isolation valves, and one Seismic I isolation valve and one Seismic I check valve on the return from the users. A failure of this non-seismic portion of the CCWS does not result in excessive radiological release because there is no potential for radioactive in-leakage to the CCWS from these users. The CCWS is at a higher pressure than each of these systems, so the only potential for in-leakage is from CCWS into these systems. The control room is not adversely affected by a failure of the non-seismic CCWS piping in the NAB or the RWPB because the control room is located in the Seismic I SB 2.~~

~~The dedicated CCWS is a non-safety-related system located in SB 4 whose piping and components are non-seismic. This system is used in beyond design basis accidents to transfer heat from the severe accident heat removal system (SAHRS). A failure of this non-seismic portion of the CCWS does not result in excessive radiological release since the pressurized tank in the dedicated CCWS keeps the system at a higher pressure than that of the SAHRS to prevent possible in-leakage of contaminated fluids in the SAHRS. The control room is not adversely affected by a failure of the non-seismic dedicated CCWS piping located in SB 4 because the control room is located in the Seismic I SB 2.~~

~~A fault in CCWS piping is recognized by redundant level indications on each CCWS surge tank. In the event that tank levels drop to MIN 2, the non-safety-related branches automatically isolate if there is a flow mismatch in inlet and outlet of the supply and return lines for the users. The CCWS is a closed-loop cooling water system with the only potential for radioactive in-leakage coming from the high pressure CVCS and RCS.~~

9.2.2.2.2 Component Description

Refer to Section 3.2 for details of the seismic and system quality group classification of the CCWS, CCW structures, and CCW components.

CCWS Pumps

CCWS pumps are sized to provide the capacity to support system flow requirements during penalizing conditions. To accomplish this, design margins are added to the limiting ~~flow~~ requirements (volumetric flow and head). The pump design flow of 18,294 gpm shown in Table 9.2.2-1 includes an approximate 15 percent margin above the required maximum pump flow. The pump head of 199.7 ft in Table 9.2.2-1 includes an approximate 15 percent margin above the required maximum pump head.~~The required design margins of the CCWS pumps are given in Table 9.2.2-5—Design Margins of CCWS Pumps.~~

~~Margin is combined using the square root of the sum of the squares method to prevent system over design which challenges system operation during normal operation. Considering that margin must be available for system flow balancing, the margin provided for this purpose is added using a straight summation to that combined using the square root of the sum of the squares (e.g., wear, testing uncertainty, grid frequency deviations). The margin (penalties) to be applied to the pump design conditions are as follows:~~

Pump head design margin: $\sqrt{(10\%)^2 + (2\%)^2 + (3.31\%)^2} + 5\% = 15.72\%$

Pump flow design margin: $\sqrt{(10\%)^2 + (2\%)^2 + (1.67\%)^2} + 5\% = 15.33\%$

The CCWS pumps are part of the safety-related cooling trains.

The four pumps are centrifugal type. The pump motor is cooled by an air-water cooler supplied by CCWS itself. The pump and motor are horizontally mounted on a common base plate. The pump and motor bearings are oil lubricated and are air cooled.

Motor heaters are provided on the motors and are energized when the pump is not in operation to prevent the formation of condensation.

During normal operating conditions, two of the four pumps are operating.

Dedicated CCWS Pump

The dedicated CCWS pump is non-safety-related and is in standby during normal plant operation.

The pump is centrifugal type. The pump motor is cooled by an air-water cooler supplied by the CCWS itself. The pump and motor are horizontally mounted on a common base plate. The pump and motor bearings are oil lubricated and are air cooled.

A motor heater is provided on the motor and is energized when the pump is not in operation to prevent the formation of condensation.

Dedicated CCWS Makeup Pump

The water supply pump is a positive displacement piston type to increase the head of the demineralized water distribution system (DWDS) supply to adjust the level of the pressurized surge tanks. To prevent flow pulses and to limit system vibration a pulsation damper is installed just downstream of the piston pump.

CCWS Heat Exchangers

The CCWS HXs are horizontal tube and shell type HXs. The CCW is circulated on the shell side and the ESWS supplies cooling water on the tube side. Current analysis assuming a representative constant heat transfer coefficient indicates that 124.93 MBTU/hr combined with CCWS and ESWS flow rates will require the greatest heat transfer area for the CCWS heater exchanger. For final procurement, a 10 percent margin for tube plugging will be required. The DBA case will require a minimum additional margin of 10 percent above the specified tube plugging allowance of 10 percent.

Dedicated CCWS Heat Exchanger

The dedicated CCWS HX is a horizontal tube and shell type HX. CCWS circulates on the shell side and the ESWS supplies cooling water on the tube side.

CCWS Surge Tanks

The CCWS surge tanks are concrete structures with a steel liner. Each tank is connected to the suction side of its respective train CCWS pump.

Each surge tank has sufficient storage capacity to compensate for normal system leaks or component draining. Makeup water is supplied from the DWDS.

The required surge tank water volume to account for system leakage in a post-seismic event with no available makeup is dependent on the assumed system alignment. For the CCWS, the assumed leakage paths are through each of the (2) 16” Common A header isolation valves and the (2) 24” Common B header isolation valves. Pump seal leakage and miscellaneous valve packing leakage is also considered for each CCWS train. The leakage rate for the CCWS valves is based on ASME QME-1 for flow control valves that are also intended to serve as isolation valves. ASME QME-1

identifies a nominal leakage rate of 0.6 in.^{3}/hr/NPS of nominal valve size. Pump seal leakage of 100 cubic centimeters per hour and miscellaneous valve packing leakage of 250 cubic centimeters per hour is included in the leakage calculation for each train.

The total required volume of water for 7 days of operation with no makeup system is 50.4 gallons. Each CCWS surge tank is designed to include a required water volume of 750 gallons to accommodate potential system leakage for 7 days continuous for 24 hours with no makeup source in post-seismic conditions. This reserve volume of 750 gallons for each CCWS surge tank allows each train to accommodate a total train leakage of approximately 4 gallons per hour continuous for 24 hours per day for 7 days in the event that normal demineralized water makeup is not available.

For defense-in-depth, each CCWS surge tank maintains a post-seismic emergency makeup connection for water supply from the Seismic II fire water distribution system inside the Nuclear Island. The fire water distribution system is designed to remain functional after an SSE (Refer to Section 9.5.1.2.1).

~~An additional makeup source of water to each surge tank originates from the seismically qualified portion of the fire water distribution system inside the Nuclear Island. This makeup source provides sufficient post seismic event surge tank capacity to accommodate an assumed system leakage of 20 gpm for seven days. Emergency makeup to the surge tanks is a manual operation performed by inserting a spool piece between valves AA141 and AA142. The manual valves AA141 and AA142 are then opened to provide the emergency makeup.~~

~~Plant procedures and controls associated with the installation of the spool piece will be implemented by the COL applicant.~~

Dedicated CCWS Surge Tank

The dedicated CCWS surge tank is connected to the dedicated CCWS pump suction line.

The surge tank makeup is provided from the DWDS and nitrogen overpressure is provided to prevent a leak of radioactive fluids into the dedicated CCWS from the SAHRS.

The surge tank is provided with overpressure protection.

Common Header Switchover Valves

The common header switchover valves are fast-acting, hydraulically operated valves.

The valves provide the physical train separation for the support of the common cooling loads. They are used to transfer cooling of the common users during normal plant operation or in the event of a failure during a design basis event.

The valves are interlocked so that two trains may not be simultaneously connected to the same common header. The stroke time of these fast-acting valves is sufficient to minimize the interruption of cooling to the CCWS loads.

To provide reliability of the switchover function, each hydraulically operated common header switchover valve has multiple solenoid operated pilot valves and hydraulic fluid pumps. The solenoid operated pilot valves and hydraulic fluid pumps are each powered from different Class 1E divisions.~~an uninterruptible power supply (UPS) is provided to the hydraulic actuation pilot valves. A failure of the electrical distribution system does not inhibit the transfer of the common header to the non-faulted train~~.

The non-safety load isolation valves are also fast-acting, hydraulically-operated valves. Each hydraulically-operated valve has multiple solenoid-operated pilot valves and hydraulic fluid pumps. Pilot valves and hydraulic fluid pumps are powered from different Class 1E divisions to provide redundancy. ~~Each pilot valve is powered from a different Class 1E uninterruptible power supply division to provide redundancy~~.

LHSI Heat Exchanger Isolation Valves

These valves are motor-operated valves. The valves are normally closed to prevent dilution of the LHSI fluid and may be opened when necessary to provide an adequate flow path to support long term pump operation. The valves automatically open when the train associated LHSI system is placed into service.

LHSI Pump Seal Fluid Cooler Isolation Valves

These valves are motor-operated valves. The valves are normally closed to prevent dilution of the LHSI fluid and automatically open when the train associated LHSI system is placed into service.

Containment Isolation Valves

The CCWS containment isolation valves are motor-operated valves. The normally open valves provide the means for containment isolation to maintain the integrity of the containment penetrations and thus prevent the release of potentially radioactive material during a design based accident. The containment isolation valves for non-safety-related loads are automatically closed by containment isolation actuation signals. The containment isolation valves for the RCP thermal barrier coolers are not provided with a containment isolation signal but may be remote manually closed from the control room if required.

9.2.2.3 System Operation

9.2.2.3.1 Normal System Operation

The safety-related CCWS is a four train concept which allows sharing of operational and safety users during normal operation and to separate them in case of design and beyond design based accidents. Each physically separated train consists of a main pump, motor cooler, an HX, surge tank, sample piping with permanently installed radiation monitor, a chemical addition tank and pairs of common header isolation valves. Each train also supplies cooling to the associated MHSI pump motor cooler and the LHSI HX. The CCWS trains 2 and 3 also provide cooling to the LHSI pump motor and seal water coolers.

During normal operations, one or two trains can be in operation in each pair of associated trains (trains 1 and 2 or trains 3 and 4) to cool the two common sets of users (common 1.b (2.b), with or without common 1.a (2.a)). Each of the common headers may be split so that one of the two associated trains is supplying the common 1.a (2.a) header and the other is supplying the common 1.b (2.b) header to enhance cooling efficacy of the cooling chain.

The common 1.a header provides cooling to the first FPCS train and the common 2.a header provides cooling to the second FPCS train. These are separated from the other operational loads (1.b and 2.b) that the CCWS supplies to maintain FPCS cooling capacity during maintenance or plant outages.

Each train in operation:

- Cools the fluid in a closed loop through the CCWS exchanger.
- Provides recirculation in the surge tank for CCW mixing.
- Cools the main auxiliary pumps coolers (SIS and CCWS pumps).
- Is continuously sampled for radioactivity leakage into the CCWS using the permanently installed radiation monitor.

For each of common headers (1 and 2), the associated safety-related trains are isolated from each other by the four switchover isolation valves located on the supply and return side of each common header sub-loop (a and b).

The permissive for the switchover valve of the on-coming CCWS train is by limit switch of the switchover valve of the off-going CCWS train. The switchover valve of the off-going train must signal “Closed” prior to the switchover valve of the on-coming train being allowed to open. Train separation of the redundant CCWS divisions is provided to confirm that a fault affects no more than one train. To achieve this, the switchover valves are interlocked. The following valve groupings cannot be

simultaneously opened to prohibit more than one train from being connected to a common header:

- Common 1.A – 30KAA10AA032/033 with 30KAA20AA032/033.
- Common 2.A – 30KAA30AA032/033 with 30KAA40AA032/033.
- Common 1.B – 30KAA10AA006/010 with 30KAA20AA006/010.
- Common 2.B – 30KAA30AA006/010 with 30KAA40AA006/010.

The following common header switchover sequences are defined for the CCWS:

- Normal Switchover.

  During normal plant and system operation, swtichover of the common headers is periodically done by the plant operators to verify the operability of the CCWS trains (system surveillances) and to equalize the run time of each CCWS pump. The normal swithover is a remote manual actuation from the MCR.

- Automatic Backup Switchover.

  The automatic backup switchover sequence functions to limit the loss of flow to common 1.b (2.b) users in case of failure of a CCWS train supplying the common 1.b (2.b) or common 1.a and 1.b (2.a and 2.b) headers. This function confirms the supply of safety-related loads (e.g., RCP thermal barrier) connected to the common 1.b (2.b) header. This switchover function is an automatic function.

During the normal switchover sequence and ~~emergency~~automatic backup switchover sequence, flow to all CCWS users on the common headers is momentarily degraded. The quick-closing hydraulically operated switchover valves are designed to close and open within 10 seconds. During the maximum allowed time for the closing and opening sequence (20 seconds), there is a potential for increased temperatures in the systems supplied with CCWS via the common headers. Systems that depend on CCWS cooling from the common headers are designed for transients caused by the switchover sequences.

Depending on the system user requirements, heat loads and flow rates, and depending upon the current plant operation, the CCWS can be configured with two, three or four trains in operation.

The following criterion drives CCWS operation with two, three or four trains:

- CCW temperature at the outlet of CCWS HX must be above the minimum required and below the maximum allowed.
- CCWS pump steady state operating flow must be between the minimum required and the maximum allowable.

For some users, the CCWS flow rate will be controlled automatically, while the others stay at fixed flow resistance during all operating conditions. Flow rates through CCWS users are adjusted once during plant commissioning with the most penalizing configuration (system flow balancing). After this, the minimum required user flow rate is always maintained whatever the plant operating condition. The system flow balance is reaffirmed regularly throughout the plant life during periodic surveillances. The expected cooling flow rate through system users, with fixed flow resistance, can reach approximately 140 percent of the required flow. Manual adjustments of flow balancing devices generally are not required during the normal plant operating cycle.

To make sure that the CCWS pump operates within the allowable range, system operation is limited. The allowed system configurations for a train are as follows:

- One train supplies only its associated SIS users (train-related LHSI HX and LHSI/MHSI pumps).
- One train supplies the common 1.a (2.a) header (common FPCS loads) and associated LHSI users.
- One train supplies only the common 1.b (2.b) header (main common user group).
- One train supplies the common 1.b (2.b) header and associated LHIS users.
- One train supplies the common 1.a and 1.b (2.a and 2.b) headers.
- One train supplies the common 1.a and 1.b (2.a and 2.b) headers and its LHSI users without the maximum flow rate through the CVCS and FPCS HXs.

For pump protection, the following configurations for an operating train are not permitted:

- One train cannot be isolated from the common headers and also from the LHSI/RHR HX.
- One train cannot supply only the common 1.a (2.a) header.
- One train cannot supply the common 1.a and 1.b (2.a and 2.b) header and its LHSI users with the maximum flow rate through the CVCS and FPCS HXs.

Forbidden configurations lead to operations with abnormal flow rate and are subject to automatic system protection.

CCWS leakage (e.g., valve packing and pump seals) is compensated for by a makeup of demineralized water to the CCWS surge tanks. This makeup is controlled by the automatic opening and closing of the DWDS supply isolation valve. This isolation valve is a motor-operated safety-related valve that is part of the CCWS.

Depending upon the ESWS temperature, the CCWS temperature could be too low. The HX bypass control valve is positioned in order to maintain a CCWS HX outlet temperature greater than the minimum allowable.

During normal plant and system operation, switchover of the common headers is periodically done by the plant operators to verify the operability of the CCWS trains (system surveillances) via the normal switchover sequence.

Hot Shutdown

After the reactor is shut down, the RCS is cooled by the steam generators down to a temperature of 250°F. During the beginning of this state, CCWS has the same configuration as in power operation. At the end of this state, four CCWS trains will be in operation.

Two CCWS trains are in operation, aligned and ready to remove residual heat from the RCS via the associated LHSI trains as soon as they are placed in RHR operation.

The remaining two CCWS trains continue to cool the two common headers, and are ready to provide their SIS functions if necessary.

Cool Down Procedure

Cooling by Two CCWS trains—RCS Temperature < 250°F

Two LHSI trains are operating in the residual heat removal (RHR) mode and are removing residual heat from the RCS to the heat sink. The associated CCWS trains cool the LHSI/RHR HXs. The other two trains cool the common 1 header (trains 1 or 2) and common 2 header (trains 3 or 4).

This configuration is the same as for Hot Shutdown.

During the plant cooldown and before depressurization of the RCS, it is necessary to purify the RCS fluid. The two CVCS charging pumps are running and the two CVCS HP coolers are supplied by the CCWS.

Cooling by Four CCWS trains—RCS Temperature <212°F

The two CCWS trains cooling the common headers are connected to their corresponding LHSI/RHR trains. Within these two trains, heat to be removed from the LHSI/RHR HX is controlled by throttling the LHSI/RHR HX bypass to limit the CCWS HX outlet temperature to the maximum allowable.

The FPCS HX is cooled by either the common 1 or 2 header. Flow through the second FPCS HX could be secured to increase the efficiency in that connected CCWS train.

Configurations discussed above consider the availability of the four CCWS/LHSI trains. When only three trains are used for the RHR operation, a delay in the cooldown process will occur, depending on the ESWS temperature.

Refueling

At the beginning of the core unloading process, the CCWS is supporting core cooling for the fuel in the reactor vessel and cooling the FPCS also, at the minimum flow. At the end of the core unloading process, the CCWS is only supporting the cooling of the spent fuel pool (SFP) with cooling provided to both FPCS HXs at the maximum rate. Cooling of the common headers is maintained during core unloading.

CCWS is not analyzed to simultaneously cool a LHSI HX, the Common 1.b (2.b) header, and the Common 1.a (2.a) header with maximum cooling to the FPCS HX.

It is expected that both FPCS HXs are in operation, with the first FPCS HX cooled by a CCWS train at the maximum required flow and the second FPCS HX cooled at the minimum flow. The CCWS train supplying cooling to the FPCS HX at the maximum rate must not also be connected to common 1.b (2.b) header.

During the core unloading process, the CCWS flow rate through the second FPCS HX can be increased from the control room by opening the motor-operated flow control valve on the outlet of the FPCS HX. The CCWS flow rate through the FPCS HXs depends on the ESWS temperatures and actual decay heat load.

As the fuel is transferred from the RCS to the SFP, the required cooling to the RHR system decreases and the required cooling to the FPCS increases. To maintain the CCWS pump within its normal operating range, the cooling to the LHSI HX must be isolated for the CCWS train also connected to the second FPCS HX, prior to increasing flow from the minimum value. Another possibility is to transfer the cooling of the second FPCS HX to a train not also cooling the common 1.b (2.b) header.

Core Unloaded

When the core is completely unloaded into the SFP, the two CCWS trains ~~not~~ supplying the common 1.a and 2.a headers cool both FPCS HXs at the maximum flow rate, and other required common 1.b or 2.b users for this mode. Two CCWS trains can be out for maintenance if they do not supply the same common header (1 or 2 and 3 or 4).

Abnormal System Operation

Large Loss of Water

CCWS Safety-Related Trains

A large water loss occurring in a CCWS train leads to a significant loss of system fluid and consequently to a drop of the CCW level in the corresponding surge tank.

The following leakage detection sequence is initiated when the surge tank level is less than the MIN2 setpoint:

1. The non-safety-related piping, located in the NAB and RWB, is isolated by fast-closing valves if there is a difference between the measured flow rate at the inlet and outlet of each branch. This is an indication of a leak, localized on the branch.

2. If the surge tank level drops below the MIN3 setpoint, the leak may be located in safety-related piping on the common header. The common headers are then isolated by closing of the switchover valves of the faulted train. The goal of this actuation is to provide availability of the train for its SIS users.

3. If the surge tank level continues to decrease below the MIN4 setpoint after the switchover valves are closed, the leak is located on the corresponding train. After reaching level MIN4, the associated CCWS train pump is tripped.

Dedicated Trains

In case of a pipe break, the dedicated CCWS surge tank pressure will decrease and the makeup pump will automatically start to maintain the pressure. If the water leak is greater than the capacity of the makeup pump to replace, a low level is reached in the tank, at which point the tank is automatically isolated to prevent nitrogen injection into the pump suction piping. The train pumps are correspondingly tripped and the train is unavailable.

Loss of one ESWS Train

CCWS Safety-Related Trains

In case of loss of one ESWS or CCWS train, an automatic backup switchover is performed to allow the cooling of the common headers using the available train. In case of a loss of an ESWS train, the corresponding CCWS train can be kept in operation supplying its safety users (SIS users) so long as the CCWS operating temperature is lower than 100.4°F, the maximum operating temperature for safety users.

Dedicated Train

The dedicated CCWS train is cooled by the dedicated ESWS train. In case of a loss of the dedicated ESWS train, the associated dedicated CCWS train is also lost.

Loss of a CCWS train

CCWS Safety-Related Trains

In case of loss of one CCWS train, an automatic backup switchover is done to allow the cooling of the common a or b headers (or both) with the available train. The restoration of cooling to the "a" headers is a manual sub-function of the automatic backup switchover.

Dedicated Train

In case of a loss of the dedicated CCWS train, the entire SAHRS cooling chain is lost.

Active Failure

CCWS Safety-Related Trains

In case of loss of a CCWS pump, an automatic backup switchover is done to allow for cooling of the common a or b headers (or both) with the available train. The restoration of cooling to the "a" headers is a manual sub-function of the automatic backup switchover.

Dedicated Train

In the event of the loss of the dedicated CCWS pump, the train is lost. If the makeup pump is lost, water makeup from the DWDS is also lost. With a water leak within the dedicated CCWS train, a low level will eventually be reached in the tank and the tank will be automatically isolated. The main dedicated CCWS pump is then tripped, leaving the train unavailable.

CCWS Protection Against RCS Dilution

Tube Rupture Inside RHR Heat Exchanger

When the LHSI is not operating in the RHR mode, an HX failure causes a leak from the CCWS to the SIS. The following protections have been designed to avoid RCS dilution:

- When a LHSI pump is not in operation, the isolation valve upstream and a check valve downstream of the RHRS HX prevents any leakage from the CCWS to the RHRS. When the isolation of the LHSI HX is not possible, flow being used for pump protection, an alarm informs the operator of the potential risk. The operator

can sample directly the content of the water boxes of the HX via a dedicated sampling line.

- Before connecting an LHSI train for the first time to the RCS in the RHR mode, the relevant LHSI pump is started on its minimum flow line through the in-containment refuelling water storage tank. This second line of defense permits detection of the failed HX.

- When a LHSI pump is started on its minimum flow line or on the closed loop, a faulty HX causes leakage into the CCWS. This leakage is detected by the train radiation monitor or an uncontrolled level rise in the CCWS surge tank.

- Provisions are required to minimize the risk of CCWS leakage during maintenance on the LHSI trains. The component boundary can be verified via a pressure test on the CCWS side or a pressure test of the RHR/LHSI.

Failure of a LHSI Pump Seal Fluid Cooler

When a LHSI pump is not in operation, the isolation valve upstream and a check valve downstream of the seal cooler prevent any leakage from the CCWS to the RHRS.

Tube Rupture Inside Thermal Barrier

The possibility of diluting the RCS via a faulty RCP thermal barrier exists only when the RCS is in a low pressure state.

After a predetermined time delay (≈15 minutes), which allows for RCP coast down and when the RCS pressure is low, the CCWS will be automatically isolated from the RCP thermal barrier via the CCW inlet and outlet isolation valves.

Tube Rupture Inside a CVCS HP Cooler

A leak from the CVCS into the CCWS will be detected by radiation monitors on the CCWS return lines from each of the CVCS HP coolers. A high radiation alarm from either of these monitors will trigger automatic isolation of the affected CVCS HP cooler via motor-operated valves (KBA 11/12 AA001/003) in the CVCS (See Figure 9.3.4-1).

RCS Cooldown with Less Than 3 Trains

If less than three trains of the plant cooling chain (RHR, CCW, ESW) are available, stabilization of the RCS temperature is achievable. If the RCS must be cooled to cold shutdown conditions, it may be necessary to remove non-essential CCWS user loads from operation.

This may be necessary only during peak summer conditions, and an excessive throttling (bypassing) of the LHSI HX to limit the CCWS temperatures late in the cooldown process is an indication of the need to do so.

Accident Operating Conditions

Safeguard Building LOCA or LOCA Coupled With Unavailability of Two CCWS/SIS Trains

This accident condition postulates the unavailability of one CCWS train due to a single failure with another train in maintenance. Upon receipt of a safety injection and containment isolation stage 1 actuation, the reactor protection system (RPS) starts the CCWS trains not in operation by:

- Starting of the CCWS pumps not initially in operation.
- Opening the LHSI/RHR isolation valves of the train not initially in operation.
- Opening the LHSI pump seal cooler isolation valves (KAA22/32AA013).
- Isolation of the non-safety-related common users outside the Reactor Building.
- Isolation of the containment ventilation and RCDT loads inside the Reactor Building on Common Header 1.b (containment isolation stage 1).

For previously running pumps, the following sequence applies:

- Opening the LHSI/RHR isolation valves ~~of the train not initially in operation~~.
- Opening the LHSI pump seal cooler isolation valves (KAA22/32AA013).
- Isolation of the non-safety-related common users outside the Reactor Building.
- Isolation of the containment ventilation and RCDT loads inside the Reactor Building on Common Header 1.b (containment isolation stage 1).

~~The initiation of each sequence is provided as a group command.~~

Upon actuation of a containment isolation stage 2 signal issued from the RPS, the RCP and CVCS loads inside the RB are isolated (not including the RCP thermal barriers).

Loss of Offsite Power

CCWS Safety-Related Trains

In case of LOOP, the four CCWS trains are still available for operation. The four CCWS pumps belonging to the four trains receive emergency power supplied by the main emergency diesel generators (EDG). Previously operating CCWS trains return to operation according to the EDG load sequencing and standby trains remain in idle unless other start orders are received during the EDG load sequencing.

Beyond Design Basis Events (Dedicated CCWS)

CCWS Safety-Related Trains

The CCWS trains are kept in operation unless they are unavailable due to a failure. If they are unavailable (e.g., a severe accident), the dedicated CCWS train can be used. When the CCWS trains are unavailable during SBO, RCP seal cooling is not available. To mitigate leakage from RCP seal failure during this event, the RCPs are supplied with a standstill seal, an alternative to seal cooling, which limits seal leakage to 0.5 gpm.

Dedicated Train

The dedicated CCWS train provides for removal of the heat from the SAHRS during accidents with the potential to result in core melt. It is also actuated in case of beyond design basis scenarios such as failure of the LHSI during small break loss of coolant accident (SBLOCA) and loss of LHSI or MHSI.

9.2.2.4 Safety Evaluation

The CCWS safety-related components and piping are installed in a physically hardened building (divisions 2 and 3) and separate buildings (divisions 1 and 4) designed to withstand the effects of earthquakes, tornadoes, hurricanes, floods, external missiles, and other natural phenomena. Section 3.3, Section 3.4, Section 3.5, Section 3.7(B), and Section 3.8 provide the bases for the adequacy of the structural design of these structures.

The CCWS is designed to remain functional after an SSE. Section 3.7(B).2 and Section 3.9(B) provide the design loading conditions that were considered. Section 3.5 and Section 3.6 provide the hazards analyses to verify safe shutdown, as outlined in Section 7.4, can be achieved and maintained.

Because only a single division of the CCWS is lost in the event of the postulated hazards of internal missiles, pipe whipping, and discharging fluids, the system safety-related functions are not prevented.

The four division design of the CCWS provides complete redundancy; therefore, no single failure will compromise the CCWS system safety-related functions. Each division of the CCWS is independent of any other division. The common 1 and common 2 non-safety-related users can be isolated from the safety-related portion of the CCWS by automatic isolation valves without compromising the safety-related function of the system.

The CCWS is powered from emergency powered distribution busses. Each electrical division is functionally independent and physically separated so that a single failure in

one division will not affect another division. In case of a LOOP, each safety-related division is powered by a separate EDG.

The four safety-related divisions of the CCWS are not shared with other units. An accident in one unit will not impair the ability of the CCWS in another unit from conducting an orderly shutdown and cooldown of the remaining units.

Considering a single failure and preventative maintenance, one CCWS division may be out of service for maintenance and a second division lost to a single failure, but the ability to reach a safe shutdown state can be achieved by the remaining two CCWS divisions coincident with LOOP.

The CCWS is initially tested following the program given in Chapter 14. Periodic inservice functional testing is done in accordance with Section 9.2.2.5.

In the event of an LOCA during power operations, the RPS (refer to Section 7.3) initiates a safety injection and containment isolation phase 1 signal. The CCWS divisions previously not in operation are automatically started by the process. Containment isolation is detailed in Section 6.2.4.

Remote manual isolation of the RCP thermal barrier coolers is provided to isolate the thermal barrier in the event of a leak in the HX.

9.2.2.5 Inspection and Testing Requirements

Preliminary operational testing of the CCWS is conducted with the system cold and aligned for normal power. An accident signal is initiated, and the breakers on the lines supplying offsite power are tripped so that operation of the EDGs is tested in conjunction with the CCWS. System testing provides the following verifications of system performance:

- Satisfactory generation and transmission of the accident signal.
- Proper operation of the EDGs, including sequential load pickup.
- Within specification valve operating times.
- Within specification pump starting times.
- Within specification pump delivery rates.

Refer to Section 14.2, Test # 046, for initial plant testing of the CCWS.

The installation and design of the CCWS provides accessibility for the performance of periodic testing and inservice inspection with limited personnel exposure. Normal operation of the CCWS with alignments to the common headers allows for pump flow testing at conditions as close to design basis as possible. Periodic testing of all safety-

related equipment verifies its availability and ability to fulfill its functions. Inservice testing and inspection requirements are in accordance with the ASME BPV Code, Section XI (Reference 5).

Section 3.9 and Section 6.6 outline the inservice testing and inspections. Refer to technical specifications in Chapter 16 (SR 3.7.7) for surveillance requirements that provide for the continued operability of the CCWS.

9.2.2.6 Instrumentation Requirements

The CCWS trains are monitored and controlled from the main control room (MCR) through the process information and control system (PICS), which provides the normal indication, manual control, alarm functions, and the safety information and control system (SICS). These systems process and display information provided through the safety automation system (SAS) from the protection system (PS), which actuates the CCWS function as required by plant process safety parameters, and the process automation system (PAS), which monitors less critical process information.

Upon receipt of a safety injection signal, automatically initiated by the PS, the four CCWS trains start supplying all MHSI pump motor coolers and LHSI pump and motor coolers (except the train 1 and 4 LHSI pumps and motor coolers, which are cooled by SCWS), and the four LHSI HXs. The non-safety-related users outside of the RB are isolated. The progression of this sequence is:

1. The CCWS pumps start.
2. The LHSI HX isolation valves open.
3. The trains 2 and 3 LHSI pump seal cooler isolation valves open.
4. The isolation valves for non-safety-related users outside the RB are closed

This sequence optimizes the CCWS to cool the SIS pumps and the LHSI HXs. The simultaneous operation of the LHSI HX isolation valves (opening) and of the non-safety-related isolation valves (closing) maintains the pump operation in a safe range. There is no automatic order from the protection system to configure HX bypass control valves.

Upon receipt of a containment isolation stage 1 signal, automatically initiated by the PS, the containment HVAC and RCDT users in the RB are isolated. This achieves containment isolation and maximizes the CCW flow rate through the LHSI HX in the event of a coincident safety injection signal.

Upon receipt of a containment isolation stage 2 signal, automatically initiated by the PS, the RCP and CVCS loads inside the RB (except the RCP thermal barriers) isolate.

9.2.2.6.1 Control Features and Interlocks

The following control features and interlocks provide CCW, interfacing, and ancillary systems and equipment protection during normal operation:

9.2.2.6.1.1 CCWS Automatic I&C Safety-Related Functions

~~Emergency~~Automatic Backup Switchover Sequence

Train automatic backup switchover is performed if common 1.b (2.b) header is ~~not isolated coincident with~~supplied by a CCWS train and any of the following are realized:

- Loss of CCWS pump (KAA10/20/30/40 AP001), sensed with a low CCWS pump discharge pressure.
- Loss of one ESWS train (PEB10/20/30/40 AP001).
- Low flow rate to system users.

Train automatic backup switchover limits loss of flow to common 1.b (2.b) users in case of failure of a train supplying the common 1.b (2.b) or common 1.a and 1.b (2.a and 2.b) headers.

Train automatic backup switchover consists of:

- Close switchover valves (KAA10/20/30/40 AA006/010) on the initial train and open LHSI heat exchanger isolation valve (KAA12/22/32/42 AA005).
- Open common 1.b (2.b) switchover valves (KAA10/20/30/40 AA006/010) on the on-coming train.
- Start CCWS pump (KAA10/20/30/40 AP001) on the on-coming train.

The on-coming train common .a sub-header switchover valve may then be manually opened.

Emergency CCWS Temperature Control

An open CCWS heat exchanger bypass line can cause CCWS temperature to be greater than 100.4°F.

To prevent this condition, the bypass control valve of the CCWS heat exchanger (KAA10 AA112) is automatically stepped closed in approximate 10 percent increments when the heat exchanger outlet is near the high temperature threshold (MAX1). The valve is stepped closed until MAX1 is cleared.

This temperature control function is required during all plant modes of operation, ~~except for SBO,~~ when the CCWS (KAA10/20/30/40) is energized.

Emergency Leak Detection Sequence

Leakage can occur in a CCWS train, which leads to a loss of system fluid and consequently in a drop in the CCWS level in the corresponding surge tank.

The following leakage detection sequence is initiated when the surge tank level is less than the MIN2 set point:

- The common user ~~emergency~~automatic and normal switchover sequence is inhibited to avoid the transfer of the faulted piping on the associated train. The non-safety-related branches are isolated by fast closing valves if there is a flow mismatch between the inlet and outlet of the users supply and return lines.
- If the surge tank level continues to decrease to less than the MIN3 setpoint, the common headers are isolated by closure of the switchover valves (KAA10/20/30/40 AA006/010/032/033) and the switchover sequence is prohibited.
- If the surge tank level continues to decrease to less than MIN4 set point, the associated CCWS train pump is tripped and the common user sets switchover sequence function is unlocked to allow supplying of the common users by the ~~associated~~opposite train capable of supplying the common header. The DWDS supply isolation valve (KAA10/20/30/40 AA027) is also closed in order to avoid DW water supply to a train with a leak.

The surge tank level is detected by two redundant analog level measurements.

CCWS Actuation from Safety Injection Signal

Upon receipt of a safety injection signal, the four CCWS trains are started, supplying all SIS pump coolers and the four LHSI heat exchangers. The non-safety-related users outside of the RB are also isolated.

The system response optimizes the CCWS to cool the SIS pumps and LHSI heat exchangers. The following CCWS actuations are automatically initiated:

- Start CCWS pumps (KAA10/20/30/40 AP001), if not previously running.
- Open LHSI HX isolation valves (KAA12/22/32/42 AA005).
- Open LHSI pump seal cooler isolation valves (KAA22/32 AA013).
- Close isolation valves for non-safety related users outside of RB (KAB50 AA001/004/006 & KAB80 AA015/016/019).

Simultaneous operation of LHSI heat exchanger isolation valves (opening) and non-safety-related user isolation valves (closing) maintains pump operation in a safe range.

A safety injection signal initiates a concurrent containment isolation Stage 1 signal.

CCWS Operation from Containment Isolation Stage 1

Upon receipt of a containment isolation stage 1 signal, CONT HVAC and NI DVS users in the RB are isolated via closure of KAB40 AA001/006/012.

This system response isolates these users, confirms the containment isolation function is met, and allows a maximum cooling flow rate through the LHSI heat exchanger in the event of a coincident safety injection signal.

CCWS Operation from Containment Isolation Stage 2

Upon receipt of a containment isolation stage 2 signal, the RCP and CVCS loads inside the RB are isolated (not including the RCP thermal barriers) via closure of KAB60/70 AA013/018/019.

CCWS Response to a LOOP

In case of LOOP, operating CCWS trains are de-energized. Previously operating CCWS trains return to operation according to the EDG load sequencing and standby trains remain idle, unless other start signals are received during EDG load sequencing.

CCWS Switchover Valve Interlock

Train separation of redundant CCWS divisions confirms that a fault affects no more than one train via a switchover valve interlock. To prohibit more than one train from being connected to a common header, the following groupings of valves cannot be simultaneously opened:

- Common 1.a – KAA10AA032/033 with KAA20AA032/033.
- Common 2.a – KAA30AA032/033 with KAA40AA032/033.
- Common 1.b – KAA10AA006/010 and KAA20AA006/010.
- Common 2.b – KAA30AA006/010 and KAA40AA006/010.

Thermal Barrier Isolation

~~The following actions indicate a fault of a RCP thermal barrier~~A fault of an RCP thermal barrier is recognized by the following indications:

- A high flow above a threshold value measured with a flow element in the CCWS piping on the return from each RCP thermal barrier.
- A high pressure above a threshold value measured with a pressure sensor in the RCS piping on the return from each RCP thermal barrier.

Isolation valves at inlet (JEB10/20/30/40 AA021) and outlet (JEB10/20/30/40 AA003) of each RCP thermal barrier (as shown in Figure 5.1-4) are used to automatically isolate the faulted thermal barrier from the CCWS. High radiation in the CCWS does not initiate automatic isolation of CCWS cooling to the RCP thermal barriers. Isolation of faulted RCP thermal barrier only affects that RCP; it does not affect the CCWS cooling of the other three RCP thermal barriers or thermal barrier cross tie.

CCWS Containment Isolation Valve Interlock

Either the common 1.b or 2.b headers can provide cooling to the RCP thermal barriers. To maintain strict train separation of the redundant CCWS division supplying either common header to confirm that a fault affects no more than one train, the CIVs (KAB30 AA049/050/051/052/053/054/055/056) are interlocked. One of the two common 1.b supply valves (KAB30 AA049/050) and one of the two common 1.b return valves (KAB30 AA051/052) must be closed prior to opening the CIVs from the common 2.b header (KAB30 AA053/054/055/056), and vice versa.~~The CCWS CIVs from the common 1.b header (KAB30 AA049/051/052) must be closed prior to opening the CIVs from the common 2.b header (KAB30 AA053/055/056), and vice versa.~~

~~*Switchover Valves Leakage or Failure*~~

~~In the event of a switchover valve seat leakage or failure and depending upon the difference in pressure between the two CCWS trains, a water transfer can occur. If the water transfer leads to a MAX2 in one of the two associated trains and MIN3 on the other, the common users are automatically isolated from the safety trains.~~

9.2.2.6.1.2 CCWS Manual I&C Safety-Related Functions

CCWS Manual Control

Safety-related manual controls are provided for the operators in the MCR as a backup to the SR system automation. Manual control capabilities are provided in the MCR for the following CCWS components:

- CCWS pump (30KAA10/20/30/40 AP001).
- CCWS switchover valves (30KAA10/20/30/40 AA006/010/032/033).
- CCWS heat exchanger bypass valve (KAA10/20/30/40 AA112).
- Non-safety-related branch Isolation valves (KAB50 AA001/004/006, KAB80 AA015/~~015~~016/019).
- CIVs.

CCWS Common 1.a (2.a) Manual Supply

When the common 1.b (2.b) header supply is automatically transferred to the common header associated CCWS train via the ~~emergency~~automatic switchover sequence, the common 1.a (2.a) header is also isolated and no automation is foreseen to switchover the common 1.a (2.a) header. To re-establish cooling of the FPCS, the opening of switchover valves (KAA10/20/30/40 AA032/033) is performed in the MCR.

9.2.2.6.1.3 CCWS Non-Safety-Related Functions

Normal Switchover Sequence

During normal plant operation, switchover of the common headers is periodically done by the plant operators to confirm operability of CCWS trains (system surveillances) and equalize run time of each CCWS pump. This switchover sequence is a manual action performed from the MCR.

This action is normally done when only one train is in operation on a pair of two associated trains. ~~In the semi-automatic normal switchover sequence, all the parameters which can be checked before the actuation of the valves are done to increase the reliability of the sequence.~~

This switchover consists of the following sequential actions:

- Start ESWS pump (PEB10/20/30/40 AP001).
- Start CCWS pump (KAA10/20/30/40 AP001).
- Open LHSI heat exchanger isolation valve on the on-coming train as mini flow line (KAA12/22/32/42 AA005).
- Close switchover valves (KAA10/20/30/40 AA006/010/032/033) on the off-going train and open of the train associated LHSI heat exchanger isolation valve (KAA12/22/32/42 AA005).
- Open switchover valves (KAA10/20/30/40 AA006/010/032/033) on the on-coming train.

Unavailability of a CCWS train (low level on the surge tank, loss of pump) inhibits the common user switchover to this train.

In case of a failure to close of a switchover valve on the initial train or lack of opening of a switchover valves on the final train, another switchover is automatically done to the initial configuration. Refer to Section 7.6.1.2.3 for a more detailed description.

CCWS Surge Tank Makeup

A CCWS train can operate as long as the water level in the CCWS surge tank is maintained between the MIN1 and MAX1 levels. This non-safety-related function maintains the CCWS surge tank level within design limits during normal plant operation.

Small CCWS leakage is compensated for with demineralized water via operation of the DWDS supply isolation valve (KAA10/20/30/40 AA027):

- When the surge tank water level lowers to the MIN1 level, the DWDS supply isolation valve (KAA10/20/30/40 AA027) is automatically opened.
- When the surge tank water level reaches the MAX1 level, the DWDS supply isolation valve is automatically closed.

RCP Thermal Barrier Cooling Transfer

Either the common 1.b or 2.b headers can provide cooling to the RCP thermal barriers. Because of the valve interlock associated with the supply of cooling to these loads and the short duration desired to have cooling flow isolated, a group command is provided. The RCP thermal barrier cooling transfer consists of closing the open group of CIVs (KAB30 AA049/050/051/052, common 1.b or KAB30 AA053/054/055/056, common 2.b) and as soon as ~~all valves indicate closure~~one of the two supply valves on the initial header and one of the two return valves on the initial header indicate closure, the other group of CIVs (KAB30 AA049/050/051/052, common 1.b or KAB30 AA053/054/055/056, common 2.b) are opened.

In case a CIV fails to ~~close~~open ~~on the initial common header or lack of valve opening of a CIV~~ on the final header, another transfer is automatically performed back to the initial configuration.

In the event that one CCWS train is inoperable, RCP thermal barrier cooling is aligned to the CCWS common header that is supported by two operable CCWS trains within 72 hours per Chapter 16, Technical Specification 3.7.7.

CCWS Temperature Control

Normally, the CCWS heat exchanger bypass control valve (KAA10/20/30/40 AA112) is manually positioned in order to maintain a CCWS normal temperature greater than 59°F and less than 100.4°F. This is a remote manual operation from the MCR. An alarm is relayed to the operator in the MCR when the temperature is near the MIN2 or MAX2 temperature limit. The non-safety automatic controls will not be enabled while the valve is in the remote manual mode. Remote manual control can only occur if there is no automatic Class 1E function operating on the valve. The automatic Class

1E functions, which are addressed in Section 9.2.2.6.1, will override other manual or automatic non-safety control functions.

To avoid a CCWS temperature less than 59°F, the bypass control valve of the CCWS heat exchanger (KAA10 AA112) is automatically stepped opened when the heat exchanger outlet is near the low temperature threshold (MIN1). The valve is stepped open in 10 percent increments every one minute until the temperature measured at the heat exchanger outlet is above the threshold value or the bypass valve is fully open.

During normal plant operation, an open CCWS heat exchanger bypass line can cause CCWS temperature to be greater than 100.4°F. To prevent this condition, the bypass control valve of the CCWS heat exchanger (KAA10 AA112) is automatically stepped closed in approximate 10 percent increments when the heat exchanger outlet is near the high temperature threshold (MAX1). The valve is stepped closed until MAX1 is cleared.

Manual Start and Trip of a Train

During normal operation, the CCWS trains are started to align the CCWS configuration to meet the operational needs of the plant.

When the pump is shutdown, the LHSI heat exchanger isolation valve (KAA12/22/32/42 AA005) is closed after a time delay to avoid risks of leakage from a CCWS train through the corresponding SIS train.

Dedicated CCWS Control

The dedicated CCWS train is manually actuated from the MCR when needed during severe accident conditions. Control is provided for the follow components:

- Dedicated CCWS pump (KAA80 AP001).
- Dedicated CCWS makeup pump (KAA80 AP201).
- Dedicated CCWS tank outlet valve (KAA80 AA020).
- Dedicated CCWS makeup isolation valve (KAA80 AA202).
- Dedicated CCWS tank nitrogen isolation valve (KAA80 AA021).

System monitoring instrumentation transmits the following signals:

- Pump discharge flow rate.
- SAHRS heat exchanger CCWS return flow.
- Surge tank pressure.

- SAHRS heat exchanger CCWS inlet temperature.
- Dedicated CCWS heat exchanger inlet and outlet temperatures.

Dedicated CCWS Surge Tank Water Makeup

Water makeup is accomplished with the makeup pump (KAA80 AP201) and is isolated by motor-operated valve (KAA80 AA202), which is normally closed.

Water makeup is automatically initiated when a low level is reached.

Dedicated CCWS Circuit Pressurization

The nitrogen in the dedicated CCWS surge tanks (KAA80 BB001) pressurizes the dedicated CCWS train to a pressure greater than the SAHRS. It also compensates for the water expansion and contraction resulting from a temperature change in the system fluid.

The nitrogen isolation valve (KAA80 AA021) can be manually opened from the MCR.

Information about the nitrogen quantity in the tank assists the operator in controlling the nitrogen makeup (derived from the pressure, temperature and water level in the tank).

The tank is protected against over pressurization by a safety valve (KAA80 AA193) connected to the gas space of the tank.

The surge tanks are isolated from the main circuit with the tank outlet isolation valve (KAA80 AA020) to avoid nitrogen expansion in the main circuit in case of large break.

9.2.2.6.1.4 CCWS Pump Control, Protection and Monitoring

High Bearings Temperatures

An alarm is relayed to the operator in the MCR when the pump bearing temperature or the motor bearing temperature is near the first threshold value. The second threshold value trips the pump.

High Windings Temperatures

An alarm is relayed to the operator in the MCR when the motor stator windings temperature is near the first threshold value. The second threshold value trips the pump.

9.2.2.6.1.5 Additional Control Features and Interlocks

- Each CCWS pump is interlocked with its associated LHSI/RHR HX supply valve so that when the pump is stopped the supply valve closes, following a delay to allow

for pump coast down. This action prevents potential leakage of the CCWS into the SIS train.

- In the event of a pump low flow condition, the associated LHSI HX isolation valve automatically opens to provide a minimum flow path for CCWS pump protection. In the event of a pump high flow condition, the FPCS HX outlet flow control valve is closed to its minimum opening mechanical stop position to reduce the CCWS flow rate and to maintain normal pump operation.

- The CCWS surge tanks are instrumented with level indication and graduated level control and equipment protection set points designated from lowest to highest level (MIN4, MIN3, MIN2, MIN1, MAX1, MAX2, MAX3 and MAX4). A CCWS train can operate continuously so long as the water level in its surge tank is maintained between MIN1 and MAX1.

- Detection of increasing radiation in the CCWS from the CVCS HP coolers indicates leakage and triggers automatic isolation of the affected CVCS HP cooler via motor-operated valves (KBA11/12 AA001/003) in the CVCS. Leakage of reactor coolant into the CCWS from such users as the LHSI HXs is also indicated by increasing radiation in the CCWS and prompts isolation of the user. Refer to Section 11.5.4.4 for details on the associated radiation monitoring equipment. ~~Only the RCP thermal barrier and CVCS HP cooler leaks result in automatic isolation of the failed users.~~

- Manual or automatic actuation of a CCWS pump automatically actuates the corresponding ESWS pump.

The CCWS is designed with redundant level indication for each surge tank that is transmitted to the control room. The demineralized water makeup line for each CCWS surge tank contains a flow indication device that transmits to the control room. The combination of continuously monitored tank level and demineralized water makeup flow in real time provides the operators the ability to retrieve trending data on surge tank levels and normal makeup flow at any time and for any range of operating time. The ability to retrieve and analyze this data in real time from the MCR provides operators the ability to realize when 7 day train leakage is trending near a threshold value. This provides the operators the ability to take corrective action prior to exceeding the maximum allowed 7 day train leakage. Trending CCWS surge tank levels is important to the operation of the system in post-seismic operation because the CCWS is designed to maintain a reserve volume of water in each tank to allow the system to operate for 7 days after an earthquake with no operator action if normal makeup from demineralized water is not available.

Surveillance Requirement 3.7.7.2 is written to verify CCWS train leakage on a 31 day frequency.

9.2.2.6.1.6 RCP Thermal Barrier Temperature Monitoring

The return temperature from each RCP thermal barrier is continuously monitored in the MCR using temperature elements in the outlet of each thermal barrier as indicated in Figure 9.2.2-2, Sheets 3 and 4, and Figure 9.2.2-3, Sheets 3 and 4. High temperature indication initiates an alarm in the MCR.

9.2.2.7 CCWS Failure Modes and Effects Analysis

A failure modes and effects analysis (FMEA) for the component cooling water system (CCWS) is provided in Table 9.2.2-6.

Mission success criteria for the CCWS includes:

1. Following a design basis event: Any two CCWS supply trains operating, with supply to the associated SIS/RHR loads, supply to at least one set of Common 1.A/2.A fuel pool cooling loads and supply to the safety-related loads (RCP thermal barriers, CVCS pump motor coolers, CVCS letdown HP cooler, water cooled division of the safety chilled water system) on at least one set of Common 1.B/2.B operating loads.

2. During normal power operation (NPO): At least one CCWS supply train operating for each pair of common fuel pool cooling and common operating loads (one CCW train carrying the Common 1.A and Common 1.B loads and one CCW train carrying the Common 2.A and 2.B loads).

Operating procedures included in the FMEA table for the CCWS will be developed by the COL applicant as described in Section 13.5.

9.2.2.8 References

1. ASME Boiler and Pressure Vessel Code, Section III: “Rules for Construction of Nuclear Facility Components,” Class 2 and 3 Components, The American Society of Mechanical Engineers, 2004.

2. ANSI/ASME B31.1-2004, “Power Piping,” The American Society of Mechanical Engineers, 2004.

3. ASME Boiler and Pressure Vessel Code, Section VIII: “Rules for Construction of Pressure Vessels,” The American Society of Mechanical Engineers, 2004.

4. IEEE Std 603-1991, “IEEE Standard Criteria for Safety Systems for Nuclear Power Generating Stations,” Institute of Electrical and Electronics Engineers, 1991.

5. ASME Boiler and Pressure Vessel Code, Section XI: “Rules for Inservice Inspection of Nuclear Power Plant Components,” The American Society of Mechanical Engineers, 2004.

6. NUREG-0927, Serkiz, A.W., Technical Report, "Evaluation of Water-Hammer Experience in Nuclear Power Plants," U.S. Nuclear Regulatory Commission, May 1983.

Table 9.2.2-1—CCWS Design Parameters

Description	Technical Data
Component Cooling Water Pump (KAA10/20/30/40 AP001	
Number	4
Type	Centrifugal Pump
Flow rate max.	~~17,768~~18,294 gpm
Pump head min (at max flow rate)	199.7 ft
Dedicated Component Cooling Water Pump (KAA80 AP001)	
Number	1
Type	Centrifugal Pump
Flow Rate	~~2678~~2439.2 gpm
Pump Head	~~180~~175.2 ft
Component Cooling Water Surge Tank KAA10/20/30/40 BB001)	
Number	4
Volume	950 ft^3
Dedicated Component Cooling Water Surge Tank (KAA80 BB001)	
Number	1
Volume	75 ft^3
Component Cooling Water HX (KAA10/20/30/40 AC001)	
Number	4
Heat Load (DBA)	~~291.3~~293.35 x 10^6 Btu/hr
Dedicated Component Cooling Water HX (KAA80 AC001	
Number	1
Heat Load	51.2 x 10^6 Btu/hr

Table 9.2.2-2—CCWS User Requirements Summary
Sheet 1 of 5

Component	KKS	Heat Load (10^6 BTU/hr)	Required Flow (10^6 lb/hr)	Comments
CCWS Main Trains 1 and 4				
CCWS Pump Motor Cooler	KAA10/40 AC002	0.0955	0.0302	
LHSI Heat Exchanger	JNG10/40 AC001	152.8	2.984	Normal Cooldown when CCW train is only connected to the train SIS users (1)
		36.54	2.1906	Normal Cooldown when CCW train is only connected to the CCW common header (1)
		241	2.1906	DBA
MHSI Pump Motor Cooler	JND10/40 AP001	0.0239	0.0265	
CCWS Main Trains 2 and 3				
CCWS Pump Motor Cooler	KAA20/30 AC002	0.0955	0.0302	
LHSI Heat Exchanger	JNG20/30 AC001	152.8	2.984	Normal Cooldown when CCW train is only connected to the train SIS users (1)
		36.54	2.1906	Normal Cooldown when CCW train is also connected to the CCW common header (1)
		241	2.1906	DBA
MHSI Pump Motor Cooler	JND20/30 AP001	0.0239	0.0265	
LHSI Pump Motor Cooler	JNG20/30 AP001	0.1262	0.0141	
LHSI Sealing Fluid Cooler	JNG20/30 AP001	0.0341	0.0062	Flow isolated when LHSI pump is out of service for dilution prevention
Common Header 1				
Fuel Pool Cooling Hx	FAK10 AC001	29	0.8818	Normal Operations
		67.62	2.645	Refueling

Table 9.2.2-2—CCWS User Requirements Summary
Sheet 2 of 5

Component	KKS	Heat Load (10^6 BTU/hr)	Required Flow (10^6 lb/hr)	Comments
Safety Chiller	QKA20 AC002	5.705	0.514	
RCP Thermal Barrier	N/A	1.566	0.0792	Thermal Barriers 1-4 can be cooled by Common header 1 or 2
Additional Operational Users	QNA, QNB, JEB, KBA, KLA, KTA, QUC, KUA	69.86	4.11	
Common Header 2				
Fuel Pool Cooling Hx	FAK20 AC001	29	0.8818	Normal Operations
		67.62	2.645	Refueling
Safety Chiller	QKA30 AC002	5.705	0.514	
RCP Thermal Barrier	N/A	1.566	0.0792	Thermal Barriers 1-4 can be cooled by Common header 1 or 2
Additional Operational Users	QNA, QNB, JEB, KBA, QUC, KUA, LCQ, KBF, KBG, KPC, KPF	86.29	4.29	
Dedicated CCWS Train				
Severe Accident Heat Removal System Heat Exchanger	JMQ40 AC001/004	50.5	1.104	
~~Fuel Pool Cooling System~~				
~~Fuel Pool Cooling Heat Exchanger~~	~~30FAK10/20 AC001~~	~~29~~	~~0.8818~~	~~Normal Operations~~
		~~47.8~~	~~2.645~~	~~Normal Refueling~~
		~~33.78~~	~~2.645~~	~~Refueling (full off-load)~~
~~Reactor Coolant System~~				
~~RCP Lower Bearing Oil Cooler~~	~~JEB10/20/30/40 AC001~~	~~0.0819~~	~~0.0088~~	~~Cooling Isolated with Containment Isolation (CI) Stage 1 Signal~~
~~RCP Motor Air Cooler~~	~~JEB10/20/30/40 AC002/003~~	~~1.075~~	~~0.0529~~	
~~RCP Upper Bearing Oil Cooler~~	~~JEB10/20/30/40 AC004~~	~~1.305~~	~~0.1323~~	
~~RCP Thermal Barrier~~	~~N/A~~	~~0.3915~~	~~0.0198~~	~~Not Isolated with CI-1 or CI-2~~
~~Safety Injection and Residual Heat Removal System~~				

Table 9.2.2-2—CCWS User Requirements Summary
Sheet 3 of 5

Component	KKS	Heat Load (10^6 BTU/hr)	Required Flow (10^6 lb/hr)	Comments
~~MHSI Pump Motor Cooler~~	~~JND10/20/30/40 AP001~~	~~0.239~~	~~0.0265~~	
~~LHSI Heat Exchanger~~	~~JNG10/20/30/40 AC001~~	~~152.8~~	~~2.984~~	~~Normal cooldown when CCW train is only connected to the train SIS users~~
		~~36.54~~	~~2.1906~~	~~Normal cooldown when CCW train is also connected to the CCW common header~~
		~~241~~	~~2.1906~~	~~DBA~~
~~LHSI Pump Motor Cooler~~	~~JNG20/30 AP001~~	~~0.1262~~	~~0.0141~~	
~~LHSI Sealing Fluid Cooler~~	~~JNG20/30 AP001~~	~~0.0341~~	~~0.0062~~	~~Flow isolated when LHSI pump is out of service for dilution prevention~~
~~**Severe Accident Heat Removal System**~~				
~~SAHRS Heat Exchanger~~	~~JMQ40 AC001~~	~~47.77~~	~~1.106~~	~~Cooled by dedicated CCWS~~
~~SAHRS Pump Seal Watercooler~~	~~JMQ40 AC003~~	~~0.0593~~	~~0.0053~~	~~Cooled by dedicated CCWS~~
~~SAHRS Pump Motor Cooler~~	~~JMQ40 AC002~~	~~0.089~~	~~0.0079~~	~~Cooled by dedicated CCWS~~
~~SAHRS Pump Bearing Cooler~~	~~JMQ40 AC004~~	~~0.0223~~	~~0.002~~	~~Cooled by Dedicated CCWS~~
~~**Volume Control System**~~				
~~CVCS HP Cooler~~	~~KBA11/12 AC001~~	~~30.71~~	~~0.873~~	~~Plant Heatup~~
		~~14.3~~	~~0.2968~~	~~Normal Load~~
		~~6.9~~	~~0.1228~~	~~Plant Cooldown~~
~~Charging Pump Motor Cooler~~	~~KBA31/32 AP001~~	~~0.1706~~	~~0.0198~~	
~~Charging Pump Oil Cooler~~	~~KBA31/32 AP001~~	~~0.1706~~	~~0.0025~~	
~~Charging Pump Seal Water Cooler~~	~~KBA31/32 AP001~~	~~0.1706~~	~~0.0033~~	

Table 9.2.2-2—CCWS User Requirements Summary
Sheet 4 of 5

Component	KKS	Heat Load (10^6 BTU/hr)	Required Flow (10^6 lb/hr)	Comments
~~**Coolant Treatment System**~~				
~~After Cooler~~	~~KBF25 AC001~~	~~0.6824~~	~~0.0381~~	~~Cooling Isolated with Safety Injection (SI) Signal~~
~~Condensate Cooler~~	~~KBF20 AC006~~	~~0.9315~~	~~0.0262~~	
~~Condenser~~	~~KBF20 AC003~~	~~0.6824~~	~~0.019~~	
~~Gas Cooler~~	~~KBF20 AC004~~	~~0.0358~~	~~0.002~~	
~~Gas Cooler~~	~~KBF40 AC004~~	~~0.0481~~	~~0.0027~~	
~~Reflux Cooler~~	~~KBF40 AC003~~	~~0.9622~~	~~0.0262~~	
~~Seal Water Cooler~~	~~KBF35 AC001~~	~~0.1297~~	~~0.0071~~	
~~**Coolant Degasification System**~~				
~~CDS Condenser~~	~~KBG10 AC002~~	~~8.131~~	~~0.4524~~	~~Cooling Isolated with SI Signal~~
~~CDS Gas Cooler~~	~~KBG10 AC003~~	~~0.6244~~	~~0.0349~~	
~~**Containment Ventilation System**~~				
~~Containment HVAC Cooler 1/2/3/4~~	~~KLA61/63 AC001/003~~	~~1.365~~	~~0.1437~~	~~Cooling Isolated with CI Stage 1 Signal~~
~~**Solid Waste System**~~				
~~Condenser~~	~~KPC30/40/50 AC001~~	~~0.0341~~	~~0.0024~~	~~Cooling Isolated with SI Signal~~
~~Vacuum Unit~~	~~KPC60 AC001~~	~~0.0239~~	~~0.0048~~	

Next File

Table 9.2.2-2—CCWS User Requirements Summary
Sheet 5 of 5

Component	KKS	Heat Load (10^6 BTU/hr)	Required Flow (10^6 lb/hr)	Comments
~~**Liquid Waste Processing System**~~				
~~Distillate Cooler~~	~~KPF11 AC004~~	~~0.3583~~	~~0.0167~~	~~Cooling Isolated with SI Signal~~
~~Gas Cooler~~	~~KPF11 AC003~~	~~1.365~~	~~0.0397~~	
~~Injection Water Cooler~~	~~KPF11 AC006~~	~~0.0409~~	~~0.0024~~	
~~Seal Water Cooler~~	~~KPF11 AC007~~	~~0.1297~~	~~0.0071~~	
~~**Nuclear Island Drain and Vent System**~~				
~~Reactor Coolant Drain Cooler~~	~~KTA10 AC001~~	~~1.996~~	~~0.1124~~	~~Cooling Isolated with CI Stage 1 Signal~~
~~**Nuclear Sampling System**~~				
~~Nuclear Sampling (RCS/HL3)~~	~~KUA10 AC001~~	~~0.3958~~	~~0.0147~~	
~~Nuclear Sampling (RCS/HL3)~~	~~KUA20 AC001~~	~~0.3958~~	~~0.0147~~	
~~Nuclear Sampling (RCS/PZR)~~	~~KUA30 AC001~~	~~0.3958~~	~~0.0147~~	
~~**Steam Generator Blowdown System**~~				
~~SGBS Second Stage Cooler~~	~~LCQ51 AC003/004~~	~~10.03~~	~~0.1932~~	~~Cooling Isolated with SI Signal; Heat Exchangers are in series and the heat transfer listed is the combined load.~~
~~**Safety Chilled Water System**~~				
~~Safety Chiller~~	~~QKA20/30 AC002~~	~~4.123~~	~~0.373~~	
~~**Operational Chilled Water System**~~				
~~OCWS (QNA)~~	~~QNA21/22/23/24 AC002~~	~~11.84~~	~~0.986~~	~~Cooling Isolated with SI Signal~~
~~OCWS (QNB)~~	~~QNB62/63 AC002~~	~~1.269~~	~~0.119~~	
~~**Sampling System for Condensate Systems**~~				
~~SG Secondary Sampling (SG1)~~	~~QUC11 AC001~~	~~0.2593~~	~~0.0097~~	
~~SG Secondary Sampling (SG2)~~	~~QUC12 AC002~~	~~0.2593~~	~~0.0097~~	
~~SG Secondary Sampling (SG3)~~	~~QUC13 AC003~~	~~0.2593~~	~~0.0097~~	
~~SG Secondary Sampling (SG4)~~	~~QUC14 AC004~~	~~0.2593~~	~~0.0097~~	

Note:

1. A CCWS train aligned only to the train SIS users has a higher heat removal capacity than a CCWS train that is also aligned to the common header plus the CCWS train SIS users. Flow that would normally go to the common header is used for additional heat removal capacity from the SIS users.

Table 9.2.2-3—CCWS Common Header Users
Sheet 1 of 3

Common 1.b	
System	**User Description**
Reactor Coolant	RCP1 Motor Air Cooler
	RCP1 Motor Air Cooler
	RCP1 Lower Bearing Oil Cooler
	RCP1 Upper Bearing Oil Cooler
	RCP2 Motor Air Cooler
	RCP2 Motor Air Cooler
	RCP2 Lower Bearing Oil Cooler
	RCP2 Upper Bearing Oil Cooler
	RCP1 Thermal Barrier[1]
	RCP2 Thermal Barrier[1]
	RCP3 Thermal Barrier[1]
	RCP4 Thermal Barrier[1]
Containment Building Ventilation	Containment HVAC Cooler 1
	Containment HVAC Cooler 2
	Containment HVAC Cooler 3
	Containment HVAC Cooler 4
Nuclear Island Drain and Vent	Primary Effluents HX
Chemical and Volume Control	CVCS HP Cooler 1
	Charging Pump Motor Cooler 1
	Charging Pump Oil Cooler 1
	Charging Pump Motor Cooler 1
Nuclear Sampling	RCS/PZR
	RCS/HL1
Steam Generator Blowdown Sampling	Secondary Sampling HX SG1
	Secondary Sampling HX SG2
Operational Chilled Water	OCWS Chiller
	OCWS Chiller
	OCWS Chiller
Safety Chilled Water	SCWS Condenser Train 2

Table 9.2.2-3—CCWS Common Header Users
Sheet 2 of 3

Common 2.b	
System	**User Description**
Reactor Coolant	RCP3 Motor Air Cooler
	RCP3 Motor Air Cooler
	RCP3 Lower Bearing Oil Cooler
	RCP3 Upper Bearing Oil Cooler
	RCP4 Motor Air Cooler
	RCP4 Motor Air Cooler
	RCP4 Lower Bearing Oil Cooler
	RCP4 Upper Bearing Oil Cooler
	RCP1 Thermal Barrier[1]
	RCP2 Thermal Barrier[1]
	RCP3 Thermal Barrier[1]
	RCP4 Thermal Barrier[1]
Chemical and Volume Control	CVCS HP Cooler 2
	Charging Pump Motor Cooler 2
	Charging Pump Oil Cooler 2
	Charging Pump Motor Cooler 2
Steam Generator Blowdown Sampling	Secondary Sampling HX SG3
	Secondary Sampling HX SG4
Nuclear Sampling	RCS/HL3
Operational Chilled Water	OCWS Chiller
	OCWS Chiller
	OCWS Chiller
Steam Generator Blowdown	Second Stage Cooler
Coolant Treatment	Seal Water Cooler
	Condenser
	Gas Cooler
	After Cooler
	Condensate Cooler
	Reflux Condenser
	Gas Cooler

Table 9.2.2-3—CCWS Common Header Users
Sheet 3 of 3

Coolant Degasification	Condenser
	Gas Cooler
Solid Water	Condenser
	Condenser
	Condenser
	Vacuum Unit
Liquid Waste Processing	Vent Gas Cooler
	Seal Water Cooler
	Cooler for Injection Water
	Distillate Cooler
Safety Chilled Water	SCWS Condenser Train 3

Notes:

1. Either CCWS Common 1.b or 2.b headers can provide cooling to the RCP thermal barriers.

Table 9.2.2-4—Power Supplies for CCWS Valves
Sheet 1 of 2

Description	Tag Number	IEEE Class 1E	
		Normal	Alternate
Heat Exchanger Bypass Valve	KAA10AA112	1	2
Heat Exchanger Bypass Valve	KAA20AA112	2	1
Heat Exchanger Bypass Valve	KAA30AA112	3	4
Heat Exchanger Bypass Valve	KAA40AA112	4	3
LHSI HX Isolation Valve	KAA12AA005	1	2
LHSI HX Isolation Valve	KAA22AA005	2	1
LHSI HX Isolation Valve	KAA32AA005	3	4
LHSI HX Isolation Valve	KAA42AA005	4	3
LHSI Pump Seal Cooler Isolation Valve	KAA22AA013	2	1
LHSI Pump Seal Cooler Isolation Valve	KAA32AA013	3	4
Common 1.b Header Non-Safety Loads	KAB40AA001	1	2
	KAB40AA006	1	2
	KAB40AA012	4	3
Common 1.b Header Safety-Related Loads	KAB60AA013	1	2
	KAB60AA018	4	3
	KAB60AA019	1	2
Common 2.b Header Safety-Related Loads	KAB70AA013	4	3
	KAB70AA018	1	2
	KAB70AA019	4	3
Common 1.a Header Fuel Pool Cooling HX Downstream Control Valve	KAB10AA134	1	2
Common 2.a Header Fuel Pool Cooling HX Downstream Control Valve	KAB20AA134	4	3
Common 1.b Header RCP Thermal Barrier Containment Isolation Valves	KAB30AA049	1	2
	KAB30AA051	4	3
	KAB30AA052	1	2
Common 2.b Header RCP Thermal Barrier Containment Isolation Valves	KAB30AA053	4	3
	KAB30AA055	1	2
	KAB30AA056	4	3

Table 9.2.2-4—Power Supplies for CCWS Valves
Sheet 2 of 2

Description	Tag Number	IEEE Class 1E	
		Normal	Alternate
Surge Tank Demineralized Water Makeup Isolation Valves	KAA10AA027	1	2
	KAA20AA027	2	1
	KAA30AA027	3	4
	KAA40AA027	4	3

Table 9.2.2-5—~~Design Margins of CCWS Pumps~~

	~~Parameter~~	~~Margin~~	~~Basis~~
~~Pump Wear (In-Service Testing) Tolerances~~	~~Required Pump TDH~~	~~-10%~~	~~(1)~~
	~~Required Design Flow~~		
~~Plant Testing Instrument Uncertainty~~	~~Required Pump TDH~~	~~±2%~~	~~(1)~~
	~~Required Design Flow~~		
~~Frequency Variations~~	~~Required Pump TDH~~	~~±3.31%~~	~~(2)~~
	~~Required Design Flow~~	~~±1.67%~~	
~~Pump Manufacturing Tolerances and Testing~~	~~Required Pump TDH~~	~~+3%~~	~~(3)~~
	~~Required Design Flow~~		
~~System Flow Balancing~~	~~Required Pump TDH~~	~~5%~~	~~(4)~~
	~~Required Design Flow~~		

~~Notes:~~

1. ~~ASME OM Code – 2004, Subsection ISTB-3400~~

2. ~~Northeast Power Coordinating Council (NPCC) Document A-03, "Emergency Operation Criteria," defines a reduced grid frequency transient of 57 Hz (5 percent) for three seconds that ramps to 59 Hz over five minutes. New generating plants are expected to be designed to stay on line during this transient. This transient is bounded by National Electrical Manufacturers Association requirements so that the motors continue to operate successfully. However, a corresponding reduction in speed would result in a reduction in pump performance. Based on the preliminary nature of the requirement and the short duration of the transient, a +/- 1 Hz variation will be used.~~

3. ~~Manufacturing tolerance (+) need only to be considered for the determination of design pressure or run-out flow by specifying a guaranteed minimum pump curve, including shop performance test instrument uncertainty.~~

4. ~~Margin is applied to the system flow requirements to accommodate system flow balancing. For the controlling user, it is expected that the head loss associated with this increased flow could vary by four percent.~~

Table 9.2.2-6—Component Cooling Water System - Failure Modes and Effects Analysis
Sheet 1 of 25

Component Name	Identifier	Component Function	Failure Mode	Failure Mechanism	Failure Effect	Mission Success	Comments / Actions
CCW Pump	KAA10 AP001 KAA20 AP001 KAA30 AP001 KAA40 AP001	Prime mover to provide cooling water flow through system piping of respective train. Automatically started on Safety Injection Signal to align CCW trains to remove heat from associated LHSI trains for DBA cooldown.	Fails to start on demand	Mechanical, Electrical, I&C	One CCW pump does not start, taking one CCW train out of service. This renders the associated SIS/RHR train and the associated Essential Service Water trains ineffective.	**1) Mission Success Criteria are met.** In normal power operation (NPO), loss of one CCW train leaves: 3 of 4 CCW trains operable, 2 SFP Cooling HX operable 2 CVCS Charging Pumps operable 2 CVCS Letdown HP Coolers operable 2 SCWS Water Cooled Chillers operable CCW supplying flow to RCP thermal barriers	CCW system is designed to allow one of the four CCW trains to be taken out of service for maintenance during NPO while retaining full flow to all Common (1/2) A/B loads.
					If a CCW train is already out of service for maintenance, and CCW pump fails to start in complementary CCW train, then only one side of the CCW system (two CCW trains) is operational.	**2) Mission Success Criteria are met.** With one CCW train out for maintenance, failure of complementary CCW train during/after a DBA leaves at minimum: 2 CCW trains operable on one side of the plant, 1 SFP Cooling HX operable 1 SCWS Water Cooled Chiller operable 1 CVCS charging pump operable 1 CVCS letdown HP cooler operable, and CCW able to supply flow to all RCP thermal barriers – but may require operator action to restore cooling flow.	Some DBA scenarios, such as those involving a SB LOCA with a LOOP, may result in a loss of CCW flow to the RCP thermal barriers AND a loss of CVCS flow to RCP seals. The loss of one common header may result in a plant shutdown due to loss of cooling for bearing lube oil and motor air coolers for two RCPs. Operating procedures should require shifting RCP thermal barrier source and operating CVCS charging pump to the side of the plant with two operable CCW trains before a CCW train is secured for maintenance on the other side. 48) and 49) below discuss RCP thermal barrier cooling related to a LOOP with a single failure of an EDG or LOOP with a valve single failure.

Table 9.2.2-6—Component Cooling Water System - Failure Modes and Effects Analysis
Sheet 2 of 25

Component Name	Identifier	Component Function	Failure Mode	Failure Mechanism	Failure Effect	Mission Success	Comments / Actions
CCW Pump (Continued)	KAA10 AP001 KAA20 AP001 KAA30 AP001 KAA40 AP001	Prime mover to provide cooling water flow through system piping of respective train. Automatically started on SIS signal to align CCW trains to remove heat from associated LHSI trains for DBA cooldown.	Fails while running	Mechanical, Electrical	One CCW pump fails while in service. In NPO, loss of the CCW pump and/or loss of flow in the Common 'B' loop served by that pump initiate an Automatic Backup Switchover Sequence (ABSS). The sequence automatically: Closes all supply and return switchover isolation valves in the affected CCW train. Opens the Common 'B' loop supply and return switchover isolation valves on the complementary CCW train. Opens the SIS/RHR HX CCW inlet flow control valve on the complementary train. Starts the complementary CCW pump, restoring flow to the Common 'B' operating loads on that side of the plant.	**3) Mission Success Criteria are met.** If one CCW pump is lost while running with plant in NPO, the Automatic Backup Switchover Sequence switches operation to the complementary CCW pump and restores cooling flow to Common 'B' operating loads. Thermal inertia provides delay window for operators to manually restore cooling flow to the Common 'A' loads. 3 of 4 CCW trains operable, 2 SFP Cooling HX operable (may require operator action to restore flow) 2 CVCS Charging Pumps operable 2 SCWS Water Cooled Chillers operable 2 CVCS Letdown HP Coolers operable CCW maintains flow to RCP thermal barriers	
			Fails while running	Mechanical, Electrical	If a CCW train is already out of service for maintenance, and failure occurs to complementary CCW pump while in operation, one side of CCW is lost but both CCW trains on other side remain operable. Identical to DBA case for pump fails to start.	**4) Mission Success Criteria are met.** Results bounded by 2) above.	
			Fails to stop on demand	Electrical, I&C	Pump remains running, but can be isolated from Common (1/2) A/B loops and allowed to recirculate flow through the associated SIS/RHR HX until de-energized.	**5) Mission Success Criteria are met.** Plant/system conditions permitted stopping the affected CCW pump before it failed in RUN. Therefore, pump can be isolated from the Common (1/2) A/B loads without impact on the plant.	Affected CCW train will be out of service until maintenance resolves electrical / I&C fault that kept pump running.

Table 9.2.2-6—Component Cooling Water System - Failure Modes and Effects Analysis
Sheet 3 of 25

Component Name	Identifier	Component Function	Failure Mode	Failure Mechanism	Failure Effect	Mission Success	Comments / Actions
CCW Heat Exchangers	KAA10 AC001 KAA20 AC001 KAA30 AC001 KAA40 AC001	Rejects heat from CCW system to ESW system for transfer to UHS.	Tube rupture: CCW leak to ESW	Mechanical	CCW Surge tank level on affected train lowers; possibly initiating makeup flow from Demineralized Water Distribution System. ESW inventory increases.	**6) Mission Success Criteria are met**. With one CCW train out for maintenance, loss of a single CCW heat exchanger in another train leaves two trains operable, and able to carry at least one side of the plant. This event is bounded by 2) above because the affected CCW HX can continue to provide partial cooling and the water inventory in the affected CCW train can be made up.	Affected CCW train may be isolated, but could remain in service if plant conditions necessitate. A tube rupture in the CCWS heat exchanger with CCWS and ESWS both in standby mode would lead to leakage from the CCWS into ESWS.
			Tube rupture: ESW to CCW	Mechanical	Not Credible: CCW design pressure (175 psig) > ESW design pressure (100 psig); CCW nominal pump discharge pressure (87psig) > ESW required pump head (75 psig)		
			Loss of ESW cooling flow	Mechanical, Electrical, I&C	Loss of heat sink for CCW (and for systems which are heat source to CCW). Design separation of ESW trains limits credible failures to those affecting a single CCW train. Final effect is similar to loss of a CCW pump for the same train, but proceeds over a longer period of time.	**7) Mission Success Criteria are met**. With one CCW train out for maintenance, loss of a single CCW heat exchanger in another train leaves two trains operable, and able to carry at least one side of the plant. This event is bounded by 2) above because the affected CCW HX can continue to provide partial cooling until the ESW temperature in the affected CCW HX rises above the CCW inlet temperature. By engineering judgment, the time delay for loss of CCW cooling in a train is longer for loss of heat sink flow than for loss of a CCW pump.	Affected CCW train may provide heat sink for a finite period of time after loss of ESW cooling flow.

Table 9.2.2-6—Component Cooling Water System - Failure Modes and Effects Analysis
Sheet 4 of 25

Component Name	Identifier	Component Function	Failure Mode	Failure Mechanism	Failure Effect	Mission Success	Comments / Actions
CCW Heat Exchanger Bypass Valves	KAA10 AA112 KAA20 AA112 KAA30 AA112 KAA40 AA112	Maintains minimum CCW temperature of 59.0ºF by opening to increase bypass flow around CCW Heat exchanger.	Fails to Open	Mechanical, Electrical, I&C	Design condition is allowed mode 1, with no CCW service to Common heat loads. CCW train operation temperatures below the 59ºF minimum may result in maximum thermal stress (one thermal fatigue cycle) to LHSI/RHR HX heat transfer surface if RCS flow through LHSI/RHR HX initiates for SB LOCA. Calculation of thermal stresses in LHSI/RHR HX is not explicitly cited for this case.	**8) Mission Success Criteria are met**. With one CCW train out for maintenance, loss of minimum CCW temperature control in another train does not prevent heat transfer to CCW system. At least three CCW trains remain operable, including the affected train. However, the affected CCW train may experience a thermal fatigue cycle affecting the service life of the LHSI/RHR HX heat transfer interface.	Operator may be able to return affected train to normal temperature range by shifting some Common loop loads to the affected train.
		Maintains maximum CCW temperature of 100.4ºF by closing to reduce or stop bypass flow around CCW Heat exchanger.	Fails to Close	Mechanical, Electrical, I&C	Design condition is allowed mode 6, with a single CCW train providing flow to associated SIS/RHR loop and both sets of Common loop heat loads. CCW train operation at temperature above the 100.4ºF maximum limits the heat removal from various loads on service. The effect is similar to, but less severe than, the loss of a CCW pump. CCW HX maximum design temp is 225ºF.	**9) Mission Success Criteria are met**. With one CCW train out for maintenance, loss of maximum CCW temperature control in one train leaves two trains operable with ability to carry loads on at least one side of the plant. This event is bounded by 2) above because the heat load on the affected train may be restored by splitting the Common loops so that some loads are carried by the complementary CCW train.	Operator may be able to return affected train to normal temperature range by splitting some of the Common loop loads to another CCW train.
		Maintains CCW temperature between minimum of 59.0ºF and maximum of 100.4ºF by opening and closing to increase or reduce bypass flow around the CCW heat exchanger.	Fails in Intermediate Position	Mechanical, Electrical, I&C	CCW heat exchanger bypass control valve failure in intermediate position is bounded by failure to OPEN or CLOSE on demand.	**10) Mission Success Criteria are met**. Results bounded by 8) above for valve failure to move more OPEN. Results bounded by 9) above for valve failure to move more CLOSED.	
CCW Heat Exchanger Outlet Temperature Sensors	KAA10/20/30/40 CT893 CT894 CT895	Monitor CCW HX Outlet temperature for adjustment of associated CCW Heat Exchanger Bypass Valve to control CCW Heat Exchanger outlet temperature.	Spurious High Spurious Low	Electrical, I&C	Control system uses input from three CCW HX Outlet temperature sensors to preclude a spurious signal from one failed sensor from causing change to CCW HX Bypass Valve position.	**11) Mission Success Criteria are met**. With one CCW train out for maintenance, loss of one CCW HX Outlet temperature sensor has no effect on CCW train operability. Three CCW trains, including the affected train, remain operable.	

Table 9.2.2-6—Component Cooling Water System - Failure Modes and Effects Analysis
Sheet 5 of 25

Component Name	Identifier	Component Function	Failure Mode	Failure Mechanism	Failure Effect	Mission Success	Comments / Actions
SIS/RHR Heat Exchangers	JNG10 AC001 JNG20 AC001 JNG30 AC001 JNG40 AC001	Transfers heat from RCS to CCW during normal (RHR) and DBA (LHSI) cooldowns. In standby during normal power operation.	Tube rupture: LHSI (RCS) leak to CCW	Mechanical	SB LOCA from RCS (via LHSI) to CCW may occur during normal or DBA cooldown. SB LOCA not credible during NPO because LHSI/RHR in standby, and not pressurized. Rising level in CCW Surge tank on affected train (KAAi0 CL094/CL099/CL598). Rising CCW LHSI/RHR HX return temperature on affected train (KAAi2 CT555). Rising CCW HX inlet/outlet temperatures on affected train (KAAi0 CT092/CT090). Activity detected in CCW pump recirculation line (KAAi0 CR001). No SIS or CI signal if initiates as accident during cooldown, no heat loads are shed. If single failure following LB LOCA or other SB LOCA during NPO, SIS and CI signals actuate shedding of some heat loads.	**12) Mission Success Criteria are met.** With one CCW train out for maintenance, failure of SIS/RHR HX in complementary CCW train during/after a DBA leaves at minimum: 2 CCW trains operable on one side of the plant, 1 SFP Cooling HX operable 1 SCWS Water Cooled Chiller operable 1 CVCS charging pump operable 1 CVCS letdown HP cooler operable, and CCW able to supply flow to all RCP thermal barriers – but may require operator action to restore cooling flow.	Operator action to assess indications may be necessary to identify LHSI (RCS) leak to CCW. Diversity of sensors rules out single failure of any one sensor preventing detection of LHSI (RCS) leak to CCW. Some DBA scenarios, such as those involving a SB LOCA without a LOOP, may result in a loss of CCW flow to the RCP thermal barriers AND a loss of CVCS flow to RCP seals. Operating procedures should require shifting RCP thermal barrier source and operating CVCS charging pump to the side of the plant with two operable CCW trains before a CCW train is secured for maintenance on the other side.
			Tube rupture: CCW leak to RCS	Mechanical	Potential for CCW leak to LHSI/RHR when CCW is running, with flow through LHSI/RHR HX for CCW pump flow protection, and LHSI/RHR in standby. CCW dilutes RCS in the affected LHSI/RHR train, but does not immediately affect RCS because RCS pressure prevents backflow from LHSI/RHR. However, a subsequent reactivity excursion may occur when flow is initiated in the affected LHSI/RHR train. CCW surge tank level decreasing on affected train.	**13) Mission Success Criteria are met.** With one CCW train out for maintenance, CCW to LHSI/RHR train leak does NOT require affected CCW train be taken out of service. At least three CCW trains remain operable, including the affected train.	Affected CCW train can continue to supply Common loop loads without constraint. Operator can stop potential CCW leakage into LHSI/RHR by closing the SIS/RHR Heat Exchanger CCW Supply Isolation Valve on the affected train (CCW system pressure seats check valve KAAi0 AA011 downstream of the affected LHSI/RHR HX).

Table 9.2.2-6—Component Cooling Water System - Failure Modes and Effects Analysis
Sheet 6 of 25

Component Name	Identifier	Component Function	Failure Mode	Failure Mechanism	Failure Effect	Mission Success	Comments / Actions
SIS/RHR Heat Exchanger CCW Supply Isolation Valves	KAA12 AA005 KAA22 AA005 KAA32 AA005 KAA42 AA005	Protects the associated CCW pump from approaching shutoff head during low flow conditions by providing a flow path through the SIS/RHR HX. Automatically opened on SIS signal to align available CCW trains to remove heat from associated LHSI trains for DBA cooldown.	Fails to Open	Mechanical, Electrical, I&C	Affected CCW pump runs at/near shutoff head, with low flow in CCW train and risking damage to pump and motor. Without operator intervention, pump may eventually be lost. Because affected train approaches shutoff head, low flow condition implies that CCW cooling function has been lost even while pump may still be running.	**14) Mission Success Criteria are met.** With one CCW train out for maintenance, failure of a SIS/RHR HX CCW Supply Isolation Valve in complementary CCW train during/after a DBA leaves at minimum: 2 CCW trains operable on one side of the plant, 1 SFP Cooling HX operable 1 SCWS Water Cooled Chiller operable 1 CVCS charging pump operable 1 CVCS letdown HP cooler operable, and CCW able to supply flow to all RCP thermal barriers – but may require operator action to restore cooling flow.	In event that low CCW flow pump protection feature fails, operator can take remote manual action to place additional Common loop loads on the affected pump, providing additional flow paths to move pump operating point away from shutoff head.
	KAA12 AA005 KAA22 AA005 KAA32 AA005 KAA42 AA005	Normally closed when associated LHSI pump is not running to prevent potential RCS dilution if CCW leaks to LHSI/RHR. Automatically closed by time delay after CCW pump is secured to prevent potential RCS dilution if CCW leaks to LHSI/RHR.	Fails to Close	Mechanical, Electrical, I&C	SIS/RHR HX CCW Supply Isolation Valve closure is precautionary; it provides added means of protection in the UNLIKELY event that a leak develops at the heat transfer interface in the SIS/RHR HX. LHSI/RHR train must be in standby and associated CCW must be on service for potential CCW leak to LHSI/RHR to occur. No immediate effect on RCS because in standby, LHSI/RHR train does not have sufficient pressure to inject into RCS. However, dilution could cause a subsequent reactivity transient when LHSI/RHR flow is initiated from affected train during normal or DBA cooldown.	**15) Mission Success Criteria are met.** With one CCW train already out for maintenance, failure of the SIS/RHR HX CCW Supply Isolation Valve to close in another train does NOT prevent the affected train from performing any safety function. At least three CCW trains remain operable, including the affected train.	

Table 9.2.2-6—Component Cooling Water System - Failure Modes and Effects Analysis
Sheet 7 of 25

Component Name	Identifier	Component Function	Failure Mode	Failure Mechanism	Failure Effect	Mission Success	Comments / Actions
LHSI Pump 2/3 Seal Water Cooler CCW Supply Isolation Valve	KAA22 AA013 KAA32 AA013	Open when respective LHSI pump is in operation to provide cooling for LHSI pump 2/3 seal water when respective pump is in operation.	Fails to Open	Mechanical, Electrical, I&C	Loss of CCW supply to a LHSI/RHR pump seal water cooler will cause steady elevation of seal water temperatures and eventual loss of the pump seals, resulting in a SBLOCA at the affected LHSI/RHR pump seal and loss of the LHSI pump. Since the LHSI/RHR pump is normally in standby, and only required for normal cooldown (reactor already shutdown and SBLOCA primarily a contamination source in the safeguards building of the affected train) or for DBA cooldown (reactor shutdown and LHSI/RHR seal SBLOCA is a complication to a more serious event) this is not a controlling event.	**16) Mission Success Criteria are met.** With one CCW train out for maintenance, failure of a LHSI/RHR Pump Seal Water Cooler CCW Supply Isolation Valve in the complementary CCW train to open would prevent LHSI/RHR flow to the LHSI/RHR HX in the affected LHSI/RHR train, effectively removing that heat transfer train from service during/after a DBA. This leaves at minimum: 2 CCW trains operable on one side of the plant, 1 SFP Cooling HX operable 1 SCWS Water Cooled Chiller operable 1 CVCS charging pump operable 1 CVCS letdown HP cooler operable, and CCW able to supply flow to all RCP thermal barriers – but may require operator action to restore cooling flow.	In event that the LHSI/RHR Pump Seal Water Cooler CCW Supply isolation valve fails to open, the operator can secure the affected LHSI/RHR pump and continue cooldown with remaining assets.
		Closed when respective LHSI pump is not in operation to prevent potential LHSI (RCS) dilution from CCW in event of a Seal Water cooler failure (tube leak).	Fails to Close	Mechanical, Electrical, I&C	LHSI/RHR Pump Seal Water Cooler CCW Supply Isolation Valve closure is precautionary; it provides added means of protection in the UNLIKELY event that a leak develops at the heat transfer interface in the Seal Water Cooler. A leak in the Seal Water Cooler when the LHSI/RHR pump is in standby could result in dilution of the static RCS volume present in the associated LHSI/RHR pump header.	**17) Mission Success Criteria are met.** With one CCW train already out for maintenance, failure of the SIS/RHR HX CCW Supply Isolation Valve to close in another train does NOT prevent the affected train from performing any safety function. At least three CCW trains remain operable, including the affected train. Bounded by 15) above.	

Table 9.2.2-6—Component Cooling Water System - Failure Modes and Effects Analysis
Sheet 8 of 25

Component Name	Identifier	Component Function	Failure Mode	Failure Mechanism	Failure Effect	Mission Success	Comments / Actions
Common SFP Cooling Switchover Isolation Valves	KAA10 AA033 KAA20 AA033 KAA30 AA033 KAA40 AA033 (Supply) KAA10 AA032 KAA20 AA032 KAA30 AA032 KAA40 AA032 (Return)	Open to provide CCW cooling flow to Common (1.A/2.A) SFP cooling loads. Closed to prevent CCW cooling flow to Common (1.A/2.A) SFP cooling loads. Interlocked to prevent both CCW trains from providing flow to Common (1.A/2.A) SFP cooling loads at the same time. Fast-acting (<10 seconds) to minimize interruption of cooling flow to Common (1.A/2.A) during switchover.	Fails to Open	Mechanical, Electrical, I&C	Failure of ONE Common SFP Cooling switchover isolation valve (Supply or Return) to OPEN on demand prevents the affected CCW train from providing cooling flow to the Common SFP cooling (1.A/2.A) loads. IF the complementary CCW train is operable, that train can supply cooling flow to Common SFP cooling (1.A/2.A) loads that have temporarily lost CCW supply.	**18) Mission Success Criteria are met.** With one CCW train out for maintenance, failure of one Common SFP Cooling (1.A/2.A) supply or return switchover isolation valve to OPEN in the complementary CCW train prevents CCW flow to the SFP cooling loads from one side of the plant. This leaves at minimum: 3 CCW trains operable, including the affected train 1 SFP Cooling HX operable 2 CVCS charging pump operable 2 SCWS Water cooled chillers operable 2 CVCS letdown HP cooler operable, and CCW supplying flow to all RCP thermal barriers.	Operator action is required to restore SFP cooling, since the Automatic Back-Up Switchover Sequence does not actuate these valves. Given the thermal inertia of the SFP, immediate action is not required; the delay time available before operator action is required varies with initial SFP temperature and decay heat load imposed by the spent fuel stored in the pool.
			Fails to Close	Mechanical, Electrical, I&C	Failure of ONE Common SFP Cooling switchover isolation valve (Supply or Return) to CLOSE on demand prevents transfer of cooling supply to the complementary CCW train. IF the affected CCW train is otherwise operable, that train may continue to supply cooling flow to Common SFP cooling (1.A/2.A) loads.	**19) Mission Success Criteria are met.** With one CCW train out for maintenance, failure of one Common SFP Cooling (1.A/2.A) supply or return switchover isolation valve in the complementary train to CLOSE does not prevent that train from providing cooling flow to those loads. This leaves at minimum: 3 CCW trains operable, including the affected train 2 SFP Cooling HX operable 2 SCWS Water cooled chillers operable 2 CVCS charging pump operable 2 CVCS letdown HP cooler operable, and CCW supplying flow to all RCP thermal barriers.	
			Fails in Intermediate Position	Mechanical, Electrical, I&C	Interlock prevents opening the oncoming switchover isolation valves until the off-going isolation valves are closed. Valve failure in an intermediate position may reduce CCW flow to the affected Common SFP Cooling (1.A/2.A) loads, but still allows some flow from the affected CCW train.	**20) Mission Success Criteria are met.** With one CCW train out for maintenance, failure of one Common SFP Cooling (1.A/2.A) supply or return switchover isolation valve in the complementary train to CLOSE does not prevent that train from providing cooling flow to those loads. Bounded by 18) above.	

Table 9.2.2-6—Component Cooling Water System - Failure Modes and Effects Analysis
Sheet 9 of 25

Component Name	Identifier	Component Function	Failure Mode	Failure Mechanism	Failure Effect	Mission Success	Comments / Actions
Fuel Pool Cooling HX 1/2	FAK10 AC001 FAK20 AC001	Transfers heat from Spent Fuel Pool to CCW	Heat transfer interface failure: CCW leaks to FAK	Mechanical	CCW leakage into SFP still provides cooling, but reduces CCW inventory from the CCW surge tank for CCW train on service. CCW leakage increases SFP water inventory, but dilutes SFP boron concentration. CCW nominal operating pressure (87 psig) > FPC nominal shutoff head pressure (61 psig). Therefore, leakage continues until CCW flow is isolated from affected Fuel Pool Cooling HX.	**21) Mission Success Criteria are met.** With one CCW train out for maintenance, failure of a Fuel Pool Cooling Heat Exchanger on either side of the plant leaves at minimum: 3 CCW trains operable, 1 SFP Cooling HX operable 2 CVCS charging pump operable 2 SCWS Water cooled chillers operable 2 CVCS letdown HP cooler operable, and CCW supply to all RCP thermal barriers (capable from either side of the plant)	Operator cannot stop leakage by switching Common (1.A/2.A) supply to complementary CCW train. Operator can stop leakage by shifting operation to the redundant FPC HX. Operator can isolate leakage by directing manual isolation of CCW supply/return to affected FPC HX.
Fuel Pool Cooling HX 1/2 CCW Flow Control Valve	KAB10 AA134 KAB20 AA134	Operator action to jog valve closed protects CCW pump from approaching runout (high flow) conditions by reducing CCW flow through the Fuel Pool Cooling HX.	Fails to Open	Mechanical, Electrical, I&C	Failure of a Fuel Pool Cooling HX CCW Flow Control Valve to OPEN prevents cooling flow through the associated Fuel Pool Cooling Heat Exchanger from either of the CCW trains for that side of the plant.	**22) Mission Success Criteria are met.** Results bounded by 21) above.	
			Fails to Close	Mechanical, Electrical, I&C	Failure of a Fuel Pool Cooling HX CCW Flow Control Valve to CLOSE prevents desired reduction to CCW train flow.	**23) Mission Success Criteria are met.** With one CCW train out for maintenance, failure of the Fuel Pool Cooling HX Flow Control Valve to close prevents only the preferred method of reducing CCW flow in the affected CCW train. This leaves at minimum: 3 CCW trains operable, 2 SFP Cooling HX operable 2 SCWS Water cooled chillers operable 2 CVCS charging pump operable 2 CVCS letdown HP cooler operable, and CCW supplying flow to all RCP thermal barriers.	Excess CCW flow demand is only a problem when a single CCW train is supplying ALL cooling loads on one side of the plant (allowed mode 6). If it is not possible to reduce CCW flow through the Fuel Pool Cooling HX on service, operator can reduce CCW flow by realigning the loads carried by the operating and available CCW trains.
			Fails in Intermediate Position	Mechanical, Electrical, I&C	Failure of a Fuel Pool Cooling HX CCW Flow Control Valve in an intermediate position still allows partial CCW cooling flow through the affected FPC HX, while providing some reduction to that CCW flow. This scenario is bounded by the scenarios in which the valve fails to fully OPEN or CLOSE.	**24) Mission Success Criteria are met.** Results bounded by 22) above for valve failure to move more OPEN. Results bounded by 23) above for valve failure to move more CLOSED.	

Table 9.2.2-6—Component Cooling Water System - Failure Modes and Effects Analysis
Sheet 10 of 25

Component Name	Identifier	Component Function	Failure Mode	Failure Mechanism	Failure Effect	Mission Success	Comments / Actions
CCW Pump Flow Instrument	KAA10 CF053 KAA20 CF053 KAA30 CF053 KAA40 CF053	Monitors CCW pump flow; low flow signal automatically opens KAA12/22/32/42 AA005 to increase CCW flow; high flow signal prompts operator action to close KAB10/20 AA134 to reduce CCW flow.	Fails to recognize low flow condition OR Fails to generate low flow signal	Mechanical, I&C	Affected CCW pump will approach shutoff head conditions, with low flow in associated CCW piping and consequent loss of cooling to loads on service. Continued operation near shutoff head can result in pump overheating, eventually causing loss of the CCW train.	**25) Mission Success Criteria are met.** With one CCW train out for maintenance, failure of CCW pump in the complementary train is bounded by 2) above and leaves at minimum: 2 CCW trains operable on one side of the plant, 1 SFP Cooling HX operable 1 SCWS Water Cooled Chiller operable 1 CVCS charging pump operable 1 CVCS letdown HP cooler operable, and CCW able to supply flow to all RCP thermal barriers – but may require operator action to restore cooling flow.	
			Fails to recognize high flow condition OR Fails to generate high flow signal	Mechanical, I&C	Affected CCW pump will approach run-out conditions, with high flow in associated CCW piping. Continued operation near pump run-out can result in damage to pump and motor, eventually causing loss of the CCW train.	**26) Mission Success Criteria are met**. Results same as 25) above and bounded by 2) above.	
			Spurious high flow signal	I&C	Alarms in control room to prompt Operator to take action to reduce FPC flow.	**27) Mission Success Criteria are met.** With one CCW train out for maintenance, spurious high flow signal from the CCW Pump Flow Instrument for the complementary train prompts operator to act to reduce CCW flow to the FPC HX. This leaves at minimum: 3 CCW trains operable (one with spurious high flow signal), 2 SFP Cooling HX operable 2 CVCS charging pump operable 2 SCWS Water Cooled Chillers operable 2 CVCS letdown HP cooler operable, and CCW supplying flow to all RCP thermal barriers.	Operator action to reduce CCW flow to the FPC HX will not clear the spurious alarm signal, which may be initial indication that the signal is spurious. Review of relevant plant parameters will corroborate determination. If all CCW trains are operable, the affected CCW train may be taken out of service for maintenance; if one CCW train is already out for maintenance, operators may continue to operate the train with the spurious alarm but must exercise increased vigilance in monitoring associated plant conditions.

Table 9.2.2-6—Component Cooling Water System - Failure Modes and Effects Analysis
Sheet 11 of 25

Component Name	Identifier	Component Function	Failure Mode	Failure Mechanism	Failure Effect	Mission Success	Comments / Actions
CCW Pump Flow Instrument (Continued)	KAA10 CF053 KAA20 CF053 KAA30 CF053 KAA40 CF053	Monitors CCW pump flow; low flow signal automatically opens KAA12/22/32/42 AA005 to increase CCW flow; high flow signal prompts operator action to close KAB10/20 AA134 to reduce CCW flow.	Spurious low flow signal	I&C	Opens SIS/RHR HX CCW Supply Isolation Valve on affected train. If affected CCW train was carrying both sets of Common cooling loads (allowed mode 5) then the spurious low flow signal may cause automatic realignment to allowed mode 6, which can then cause a valid high flow condition in the affected train that may be masked by the spurious low flow signal.	**28) Mission Success Criteria are met.** With one CCW train out for maintenance, spurious low flow signal from the CCW Pump Flow Instrument for the complementary train automatically opens the associated SIS/RHR HX CCW Supply Isolation Valve. This leaves at minimum: 3 CCW trains operable (one with spurious low flow signal), 2 SFP Cooling HX operable 2 CVCS charging pump operable 2 SCWS Water Cooled Chillers operable 2 CVCS letdown HP cooler operable, and CCW supplying flow to all RCP thermal barriers.	Operator vigilance to identify flow signals that are not chronologically correlated to operations that realign CCW system configuration may help recognize spurious low CCW flow signals. Operator action may be necessary to mitigate unwarranted automatic response to spurious low CCW flow signals. SPF thermal inertia provides margin for operation with reduced FPC HX flow until Operator recognizes and counteracts the spurious low CCW flow signal.

Table 9.2.2-6—Component Cooling Water System - Failure Modes and Effects Analysis
Sheet 12 of 25

Component Name	Identifier	Component Function	Failure Mode	Failure Mechanism	Failure Effect	Mission Success	Comments / Actions
Common Operating Load Cooling Switchover Isolation Valves	KAA10 AA006 KAA20 AA006 KAA30 AA006 KAA40 AA006 (Supply)	Open to provide CCW cooling flow to Common (1.B/2.B) operating loads. Closed to prevent CCW cooling flow to Common (1.B/2.B) operating loads. Interlocked to prevent both CCW trains from providing flow to Common (1.B/2.B) operating loads at the same time. Fast-acting (<10 seconds) to minimize interruption of cooling flow to Common (1.B/2.B) during switchover.	Fails to Open	Mechanical, Electrical, I&C	Failure of ONE Common Operating Load (1.B/2.B) switchover isolation valve (Supply or Return) to OPEN on demand prevents the affected CCW train from providing cooling flow to the Common Operating Loads (1.B/2.B). IF the complementary CCW train is operable, then the Automatic Backup Switchover Sequence will act to restore cooling flow to the Common Operating Loads (1.B/2.B) that have temporarily lost CCW supply.	**29) Mission Success Criteria are met.** With one CCW train out for maintenance, failure of one Common Operating Load (1.B/2.B) supply or return switchover isolation valve to OPEN in the complementary CCW train prevents CCW flow to the Common Operating Loads on one side of the plant. This leaves at minimum: 3 CCW trains operable, including affected train 2 SFP Cooling HX operable 1 SCWS Water Cooled Chiller operable 1 CVCS charging pump operable 1 CVCS letdown HP cooler operable, and CCW able to supply flow to all RCP thermal barriers – but may require operator action to restore cooling flow.	
	KAA10 AA010 KAA20 AA010 KAA30 AA010 KAA40 AA010 (Return)		Fails to Close	Mechanical, Electrical, I&C	Failure of ONE Common Operating Load (1.B/2.B) switchover isolation valve (Supply or Return) to CLOSE on demand prevents transfer of cooling supply to the complementary CCW train. IF the affected CCW train is otherwise operable, that train may continue to supply cooling flow to Common Operating Loads (1.B/2.B).	**30) Mission Success Criteria are met.** With one CCW train out for maintenance, failure of one Common Operating Load (1.B/2.B) supply or return switchover isolation valve in the complementary train to CLOSE does not prevent that train from providing cooling flow to those loads. This leaves at minimum: 3 CCW trains operable, including affected train 2 SFP Cooling HX operable 2 CVCS charging pump operable 2 SCWS Water Cooled Chillers operable 2 CVCS letdown HP cooler operable, and CCW supplying flow to all RCP thermal barriers.	

Table 9.2.2-6—Component Cooling Water System - Failure Modes and Effects Analysis
Sheet 13 of 25

Component Name	Identifier	Component Function	Failure Mode	Failure Mechanism	Failure Effect	Mission Success	Comments / Actions
Common Operating Load Cooling Switchover Isolation Valves (Continued)	KAA10 AA006 KAA20 AA006 KAA30 AA006 KAA40 AA006 (Supply)	Open to provide CCW cooling flow to Common (1.B/2.B) operating loads. Closed to prevent CCW cooling flow to Common (1.B/2.B) operating loads. Interlocked to prevent both CCW trains from providing flow to Common (1.B/2.B) operating loads at the same time. Fast-acting (<10 seconds) to minimize interruption of cooling flow to Common (1.B/2.B) during switchover.	Fails in Intermediate Position	Mechanical, Electrical, I&C	Interlock prevents opening the oncoming switchover isolation valves until the off-going isolation valves are closed. Valve failure in an intermediate position may reduce CCW flow to the affected Common Operating Loads (1.B/2.B), but still allows some flow from the affected CCW train.	**31) Mission Success Criteria are met.** With one CCW train out for maintenance, failure of one Common Operating Load (1.B/2.B) supply or return switchover isolation valve in the two trains supplying the opposite Common Header leaves at minimum: 3 CCW trains operable 1 SFP Cooling HX operable 1 SCWS Water Cooled Chiller operable 1 CVCS charging pump operable 1 CVCS letdown HP cooler operable, and CCW able to supply flow to all RCP thermal barriers – but may require operator action to restore cooling flow.	If RCP thermal barrier cooling flow is initially aligned to the common header with one CCWS train available, no operator action is required to transfer thermal barrier cooling to the other common header that has a failed switchover valve. If RCP thermal barrier cooling flow is initially aligned to the common header with two CCWS trains available and the common header switchover valve for one of these two trains fails, operator action will be required to transfer thermal barrier cooling to the other common header.
	KAA10 AA010 KAA20 AA010 KAA30 AA010 KAA40 AA010 (Return)		Fails during routine train switchover near the seat but does not fully close resulting in very low flow to the common header	Mechanical, Electrical, I&C	Interlock prevents opening the on-coming switchover isolation valves until the off-going isolation valves are closed. Valve failure in a nearly closed position results in very low flow to the affected Common Operating Loads (1.B/2.B).	**32) Mission Success Criteria are met.** With one CCW train out for maintenance, failure of one Common Operating Load (1.B/2.B) supply or return switchover isolation valve in the two trains supplying the opposite Common Header leaves at minimum: 3 CCW trains operable 1 CCW Common Header operable 1 SFP Cooling HX operable 1 SCWS Water Cooled Chiller operable 1 CVCS charging pump operable 1 CVCS letdown HP cooler operable, and CCW able to supply flow to all RCP thermal barriers – but may require operator action to restore cooling flow.	With one CCWS train out for maintenance and in case of a failure of a switchover valve on the initial train or lack of opening of a switchover valve on the final train, another switchover is automatically performed to revert back to the initial configuration. This auto revert back feature is built into the switchover function. During closing, if a valve becomes mechanically bounded and is unable to be closed or reopened, the associated CCWS train is not able to be aligned to the common header. Therefore, one common header has no cooling water supply even though the two trains that supply that common header are OPERABLE. Depending on the alignment of CCWS to the thermal barrier, the operators may need to immediately swap to the opposite common header to maintain flow to the RCP thermal barriers.

Table 9.2.2-6—Component Cooling Water System - Failure Modes and Effects Analysis
Sheet 14 of 25

Component Name	Identifier	Component Function	Failure Mode	Failure Mechanism	Failure Effect	Mission Success	Comments / Actions
Common Operating Load Cooling Switchover Isolation Valves (Continued)							The remaining configuration in this operating scenario would leave one CCWS train in operation on one of the two common headers. The remaining two CCWS trains would be Operable and available for Safety Injection system cooling. The loss of one common header may result in a plant shutdown due to loss of cooling for bearing lube oil and motor air coolers for two RCPs. The loss of CCWS cooling to the two RCPs on the affected common header may lead to an automatic trip of the RCPs and a reactor trip. This is covered in the FSAR Chapter 15 Safety Analysis.
Containment Isolation Valves in CCW Supply/ Return to Containment Ventilation and RCS Drain coolers	KAB40 AA001 (CCW Supply Outer CIV) KAB40 AA012 (CCW Return Inner CIV) KAB40 AA006 (CCW Return Outer CIV)	Normally open, automatically closed to prevent potential release of radioactive material from containment. Actuated by Containment Isolation – Stage 1 signal.	Fails to Open	Mechanical, Electrical, I&C	If any ONE of these containment isolation valves fails to OPEN, then CCW cooling cannot be provided to the Containment Ventilation coolers (KLA61 AC001/003 and KLA63 AC003/004) or to the primary effluent heat exchanger (KTA10 AC001). In NPO, these valves are normally open, but may be cycled to test operability of Containment Isolation. Although the equipment is NOT relied upon for mitigation of DBAs, failure to restore cooling to containment ventilation after valve testing would likely initiate unplanned outage for repairs to preserve EQ margins for equipment inside containment.	**33) Mission Success Criteria are met.** With one CCW train out for maintenance, failure of one Containment Isolation valve in the supply or return lines to the Containment Ventilation coolers and the RCS drain cooler does not further constrain any safety-related cooling loads. This leaves at minimum: 3 CCW trains operable, including affected train 2 SFP Cooling HX operable 2 CVCS charging pump operable 2 SCWS Water Cooled Chillers operable 2 CVCS letdown HP cooler operable, and CCW supplying flow to all RCP thermal barriers.	Check valve KAB40 AA002 provides second isolation valve on CCW Supply line (Inner CIV).
			Fails to Close	Mechanical, Electrical, I&C	If any ONE of these containment isolation valves fails to CLOSE, the containment isolation function is fulfilled by the redundant containment isolation valve on the supply or return side.	**34) Mission Success Criteria are met**. Results bounded by 33) above.	

Table 9.2.2-6—Component Cooling Water System - Failure Modes and Effects Analysis
Sheet 15 of 25

Component Name	Identifier	Component Function	Failure Mode	Failure Mechanism	Failure Effect	Mission Success	Comments / Actions
Containment Isolation Valves in CCW cooling Supply/Return to CVCS HP Cooler 1/2 and to RCP 1/2/3/4 motor coolers	KAB60 AA013 KAB70 AA013 (CCW Supply Outer CIV) KAB60 AA018 KAB70 AA018 (CCW Return Inner CIV) KAB60 AA019 KAB70 AA019 (CCW Return Outer CIV)	Normally open, automatically closed to prevent release of radioactive material from containment. Actuated by Containment Isolation – Stage 2 signal.	Fails to Open	Mechanical, Electrical, I&C	If any ONE of these containment isolation valves fails to OPEN, then CCW cooling cannot be provided to the CVCS letdown High Pressure Cooler (KBA11/12 AC001) or to the various motor and oil coolers for RCPs 1/2/3/4 on the affected side of the plant. In NPO, these valves are normally open.	**35) Mission Success Criteria are met.** With one CCW train out for maintenance, failure of one Containment Isolation valve in the supply or return lines to the RCP motor and oil coolers (four coolers each RCP) and to the CVCS letdown HP Cooler does not further constrain any other safety-related cooling loads. This leaves at minimum: 3 CCW trains operable, including affected train 2 SFP Cooling HX operable 2 SCWS Water Cooled Chillers operable 2 CVCS charging pump operable 1 CVCS letdown HP cooler operable, and CCW supplying flow to all RCP thermal barriers.	Check valves KAB60 AA014 and KAB70 AA014 provide second isolation valve on respective CCW Supply lines (Inner CIV). The failure of the CIVs that supplies CVCS HP coolers and RCP motor and oil bearing coolers to open may result in a plant shutdown due to loss of cooling for bearing lube oil and motor air coolers for two RCPs. The loss of CCWS cooling to the two RCPs on the affected common header may lead to an automatic trip of the RCPs and a reactor trip. This is covered in the FSAR Chapter 15 Safety Analysis.
			Fails to Close	Mechanical, Electrical, I&C	If any ONE of these containment isolation valves fails to CLOSE, the containment isolation function is fulfilled by the redundant containment isolation valve on the supply or return side.	**36) Mission Success Criteria are met.** Results bounded by 35) above.	

Table 9.2.2-6—Component Cooling Water System - Failure Modes and Effects Analysis
Sheet 16 of 25

Component Name	Identifier	Component Function	Failure Mode	Failure Mechanism	Failure Effect	Mission Success	Comments / Actions
CVCS letdown High Pressure coolers 1/2	KBA11 AC001 KBA12 AC001	Protects coolant purification equipment from thermal damage by cooling RCS letdown flow.	Tube Rupture: CVCS letdown (RCS) leaks to CCW	Mechanical	During NPO, nominal pressure at CVCS letdown HP Cooler, 2250 psia >> CCW system design pressure, 190 psia. RCS leakage into CCW at CVCS letdown HP Cooler will increase CCW temperature, flow, activity, and surge tank level. In the event of an RCS leak to CCW at the CVCS letdown HP Cooler, CCW outlet flow sensed by KAB60/70 CF050 and CCW activity sensed by KAB60/70 CR002 automatically generate signals that close the CVCS isolation valves for the cooler. Since isolation occurs on the CVCS side, the CCW cooling flow to RCP motor and oil coolers continues uninterrupted.	**37) Mission Success Criteria are met.** With one CCW train out for maintenance, failure of a CVCS letdown HP Cooler supported by the by complementary CCW train during/after a DBA is bounded by 2) above and leaves at minimum: 3 CCW trains operable, 2 SFP Cooling HX operable 2 SCWS Water Cooled Chillers operable 2 CVCS charging pump operable 1 CVCS letdown HP cooler operable, and CCW supplying flow to all RCP thermal barriers.	CCW relief valves KAB60/70 AA191 protect CCW side of CVCS letdown HP Cooler from over pressurization by the CVCS (RCS) leak to CCW. The CVCS letdown HP Cooler can be manually isolated from the RCP motor and oil coolers served by the same Common Operating Loop header, but this requires a containment entry.
			Tube Rupture: CCW leaks to CVCS letdown (RCS):	Mechanical	This event is unlikely due to the smaller pressure differential and the limited time for which CVCS letdown pressure is less than CCW pressure. During cooldown and shutdown operations after the HP Cooler and RCPs have been secured, CCW flow is no longer required in this operating loop, and will normally be isolated by closing the containment isolation valves. If the loop is not isolated and a leak occurs, the volume of CCW leakage to the CVCS letdown head will be constrained by the limited compressibility of water in the static letdown header.	**38) Mission Success Criteria are met**. Results bounded by 35) above.	

Table 9.2.2-6—Component Cooling Water System - Failure Modes and Effects Analysis
Sheet 17 of 25

Component Name	Identifier	Component Function	Failure Mode	Failure Mechanism	Failure Effect	Mission Success	Comments / Actions
CVCS letdown HP Cooler 1/2 Temperature Control Valve	KAB60 AA116 KAB70 AA116	Controls letdown temperature at outlet of CVCS letdown HP coolers by adjusting CCW cooling flow through the coolers. Actuated by CVCS process flow and temperature signals from: KBA11/12 CF751 KBA11/12 CF752A/B KBA34 CF851A/B KBA34 CF852A/B KBA11/12 CT750 KBA11/12 CT751 KBA11/12 CT752	Fails to Open	Mechanical, Electrical, I&C	CCW temperature control valve failure to OPEN on demand allows CVCS letdown temperature to increase. When CVCS letdown temperature exceeds 150ºF, CVCS automatically bypasses letdown flow around purification equipment to protect thermally-sensitive components. CCW temperature control valve failure does not affect performance of the balance of the CCW system.	**39) Mission Success Criteria are met.** With one CCW train out for maintenance, failure of a CVCS letdown HP Cooler temperature control valve to OPEN during/ after a DBA is bounded by 2) above and leaves at minimum: 3 CCW trains operable, 2 SFP Cooling HX operable 2 SCWS Water Cooled Chillers operable 2 CVCS charging pump operable 1 CVCS letdown HP cooler operable, and CCW supplying flow to all RCP thermal barriers.	CVCS letdown HP Cooler outlet temperature control CCW valve failure only affects CVCS system operation.
			Fails to Close	Mechanical, Electrical, I&C	CCW temperature control valve failure to CLOSE on demand cools CVCS letdown temperature. This does not pose an operational limit on CVCS, but will result in a reduced CVCS water temperature when CVCS flow returns to RCS. This may increase thermal stress at the CVCS inlet nozzle to RCS, and impose slight effects on bulk RCS density and temperature as CVCS return flow mixes with RCS flow. CCW temperature control valve failure does not affect performance of the balance of the CCW system.	**40) Mission Success Criteria are met**. Results bounded by 39) above. With one CCW train out for maintenance, failure of a CVCS letdown HP Cooler temperature control valve to CLOSE on demand during/after a DBA is bounded by 2) above and leaves at minimum: 3 CCW trains operable, 2 SFP Cooling HX operable 2 SCWS Water Cooled Chillers operable 2 CVCS charging pump operable 2 CVCS letdown HP cooler operable, and CCW supplying flow to all RCP thermal barriers.	
			Fails in Intermediate Position	Mechanical, Electrical, I&C	CCW temperature control valve failure in intermediate position is bounded by failure to OPEN on demand.	**41) Mission Success Criteria are met**. Results bounded by 39) above.	

Table 9.2.2-6—Component Cooling Water System - Failure Modes and Effects Analysis
Sheet 18 of 25

Component Name	Identifier	Component Function	Failure Mode	Failure Mechanism	Failure Effect	Mission Success	Comments / Actions
CVCS letdown HP Cooler 1/2 CCW Outlet Flow Instrument	KAB60 CF050 KAB70 CF050	Monitor CCW outlet flow rate from CVCS letdown HP Cooler. Provide indication of CVCS (RCS) leak to CCW.	Fails to recognize low flow condition OR Fails to generate low flow signal	Mechanical, I&C	No operational requirement for low flow signal on CCW outlet from CVCS letdown HP Coolers.	**42) Mission Success Criteria are met.** Results bounded by 1) above.	
			Fails to recognize high flow condition OR Fails to generate high flow signal	Mechanical, I&C	Failure prevents automatic isolation of CVCS letdown flow through leaking CVCS letdown HP Cooler. RCS leakage into CCW at CVCS letdown HP Cooler will increase CCW temperature, flow, activity, and surge tank level. Results in contamination of affected CCW Common Operating Load (1.B/2.B) and CCW train on service, and loss of CCW cooling for affected CVCS letdown HP Cooler. CCW relief valve KAB60/70 AA191 protects CCW side of CVCS letdown HP Cooler from CVCS (RCS) pressure.	**43) Mission Success Criteria are met.** With one CCW train out for maintenance, failure of a CVCS letdown HP Cooler CCW flow outlet instrument to process a high flow signal in event of a CVCS (RCS) leak to CCW allows the leak to continue; during/ after a DBA is bounded by 2) above and leaves at minimum: 3 CCW trains operable, including affected train 2 SFP Cooling HX operable 2 SCWS Water Cooled Chillers operable 2 CVCS charging pump operable 1 CVCS letdown HP cooler operable, and CCW supplying flow to all RCP thermal barriers.	
			Spurious high flow signal	I&C	Spurious high flow signal automatically isolates the CVCS supply and return lines for the CVCS letdown HP Cooler. Loss of HP Cooler temporarily interrupts letdown flow until operator places the standby HP Cooler in operation. CVCS Charging pumps can draw water from volume control tank (and coolant storage tanks) in absence of letdown flow.	**44) Mission Success Criteria are met.** With one CCW train out for maintenance, a spurious high CCW outlet flow signal during/after a DBA isolates the operating CVCS letdown HP Cooler. This scenario is bounded by 2) above, and leaves at minimum: 3 CCW trains operable, including affected train 2 SFP Cooling HX operable 2 SCWS Water Cooled Chillers operable 2 CVCS charging pump operable 1 CVCS letdown HP cooler operable, and CCW supplying flow to all RCP thermal barriers.	Although CCW cooling flow is maintained on the standby CVCS letdown HP Cooler, operator action is required to shift CVCS letdown flow to that cooler.
			Spurious low flow signal	I&C	Spurious low flow signal could mask recognition of high flow condition associated with CVCS (RCS) to CCW leak.	**45) Mission Success Criteria are met.** Results bounded by 44) above.	No DBA involved, since CVCS HP Cooler constitutes the accident condition and spurious low flow signal constitutes the (independent) single failure.

Table 9.2.2-6—Component Cooling Water System - Failure Modes and Effects Analysis
Sheet 19 of 25

Component Name	Identifier	Component Function	Failure Mode	Failure Mechanism	Failure Effect	Mission Success	Comments / Actions
CVCS letdown HP Cooler 1/2 CCW Outlet Activity Sensor	KAB60 CR002 KAB70 CR002	Monitor activity of CCW outlet flow from CVCS letdown HP Cooler. Provide indication of CVCS (RCS) leak to CCW.	Fails to recognize high activity OR Fails to generate high activity signal	I&C	Failure prevents automatic isolation of CVCS letdown flow through leaking CVCS letdown HP Cooler. RCS leakage into CCW at CVCS letdown HP Cooler will increase CCW temperature, flow, activity, and surge tank level. Results in contamination of affected CCW Common Operating Load (1.B/2.B) and CCW train on service, and loss of CCW cooling for affected CVCS letdown HP Cooler. CCW relief valve KAB60/70 AA191 protects CCW side of CVCS letdown HP Cooler from CVCS (RCS) pressure.	**46) Mission Success Criteria are met**. Results bounded by 44) above.	
			Spurious high activity signal	I&C	Spurious high activity signal automatically isolates the CVCS supply and return lines for the CVCS letdown HP Cooler. Loss of HP Cooler temporarily interrupts letdown flow until operator places the standby HP Cooler in operation. CVCS Charging pumps can draw water from volume control tank (and coolant storage tanks) in absence of letdown flow.	**47) Mission Success Criteria are met**. Results bounded by 44) above.	Although CCW cooling flow is maintained on the standby CVCS letdown HP Cooler, operator action is required to shift CVCS letdown flow to that cooler.

Table 9.2.2-6—Component Cooling Water System - Failure Modes and Effects Analysis
Sheet 20 of 25

Component Name	Identifier	Component Function	Failure Mode	Failure Mechanism	Failure Effect	Mission Success	Comments / Actions
Containment Isolation Valves in CCW Supply/ Return lines to RCP 1/2/3/4 Thermal Barriers	KAB30 AA049 KAB30 AA053 (CCW Supply Outer CIV) KAB30 AA050 KAB30 AA054 (CCW Supply Inner CIV) KAB30 AA051 KAB30 AA055 (CCW Return Inner CIV) KAB30 AA052 KAB30 AA056 (CCW Return Outer CIV)	Control CCW cooling flow to the RCP thermal barriers protects RCP seals IF seal flow is also lost. The thermal barriers on the four RCPs are cross connected so they are supplied from the same CCW Common Operating (1.B/2.B) loop. Normally all open, OR all closed on one side of plant. Manually operated by a Group Command to minimize interruption of cooling flow when changing source of cooling flow. Group Command switches source of CCW cooling flow between Common 1B and Common 2B loops. Group Command sends "Close" signal to all CIVs in off-going loop; when one of the two supply valves and one of the two return valves indicates closed, Group Command automatically sends "Open" signal to all CIVs in oncoming loop. No automated action in response to SIS, CI-1, or CI-2 signals.	Fails to Open	Mechanical, Electrical, I&C	If any ONE of these containment isolation valves fails to OPEN, then CCW cooling cannot be provided to the RCP thermal barriers from the affected side of the plant. In NPO, one group of these valves is normally open and the other group is normally closed. These valves would NOT be cycled to test Containment Isolation operability during NPO because of the potential impact on operating RCPs. However, if the valves are cycled shut and immediately reopened, temporary interruption of CCW cooling to the RCP thermal barriers does not result in damage to the RCP seals. If CVCS seal flow to the RCPs is lost, RCS pressure will cause leakage out through the pump seals. If CCW cooling to the thermal barriers is also lost for more than two minutes, the high temperature of the leaking coolant will cause thermal expansion that will damage the seals and increase the leakage through them.	**48) Mission Success Criteria are met.** With one CCW train out for maintenance, and the associated train for that common header supplying thermal barrier cooling when a thermal barrier cooling transfer is initiated to the other common header with two CCWS trains OPERABLE, failure of any one CCW Containment Isolation valve on either the supply or return line to the RCP thermal barriers would automatically revert the system back to the original configuration where thermal barrier cooling is supplied by the common header with only one CCWS train OPERABLE. This results in a 72 LCO per TS 3.7.7 Note A.1.	In Normal Power Operation (prior to securing a CCWS train for maintenance) with 4 CCWS trains operable, two CVCS trains are available for RCP seal injection. If a RCP thermal barrier CIV fails mid-position on the off-going header or mid-position on the on-coming header it is assumed that CCWS flow to each of the two common headers (including CVCS) is still available from any of the 4 CCWS trains. Two trains of CVCS normally supply RCP seal injection while CCWS flow to the thermal barriers is restored. The one out of two logic for the initial supply valves plus the one out of two logic for the initial return valves to close allowing the transfer to complete by opening the on-coming header valves confirms that CCWS flow will be restored to the thermal barriers in the event of a LOOP with a single failure of a diesel generator or a LOOP with a single failure of one of the off-going header valves in mid-position. There is an auto revert back feature built in the thermal barrier transfer that puts the thermal barrier cooling back in the initial configuration if the single failure is one of the valves on the on-coming header to fully open. Loss of the operating CVCS pump automatically shifts CVCS operation to the standby CVCS pump, which should restore normal RCP seal water flow.

Table 9.2.2-6—Component Cooling Water System - Failure Modes and Effects Analysis
Sheet 21 of 25

Component Name	Identifier	Component Function	Failure Mode	Failure Mechanism	Failure Effect	Mission Success	Comments / Actions
Containment Isolation Valves in CCW Supply/ Return lines to RCP 1/2/3/4 Thermal Barriers (Continued)	KAB30 AA049 KAB30 AA053 (CCW Supply Outer CIV) KAB30 AA050 KAB30 AA054 (CCW Supply Inner CIV) KAB30 AA051 KAB30 AA055 (CCW Return Inner CIV) KAB30 AA052 KAB30 AA056 (CCW Return Outer CIV)	Control CCW cooling flow to the RCP thermal barriers protects RCP seals IF seal flow is also lost. The thermal barriers on the four RCPs are cross connected so they are supplied from the same CCW Common Operating (1.B/2.B) loop. Normally all open, OR all closed on one side of plant. Manually operated by a Group Command to minimize interruption of cooling flow when changing source of cooling flow. Group Command switches source of CCW cooling flow between Common 1B and Common 2B loops. Group Command sends "Close" signal to all CIVs in off-going loop; when one of the two supply valves and one of the two return valves indicates closed, Group Command automatically sends "Open" signal to all CIVs in oncoming loop. No automated action in response to SIS, CI-1, or CI-2 signals.	Fails to Close	Mechanical, Electrical, I&C	These containment isolation valves are NOT actuated by SIS, CI-1, or CI-2 signals, so they REMAIN OPEN during and after a DBA. If any ONE of these containment isolation valves fails to CLOSE, the containment isolation function is fulfilled by the redundant containment isolation valve on the supply or return side.	**49) Mission Success Criteria are met**. Results bounded by 48) above.	In Normal Power Operation (prior to securing a CCWS train for maintenance) with 4 CCWS trains operable, two CVCS trains are operable for RCP seal injection. If a RCP thermal barrier CIV fails mid-position on the off-going header or mid-position on the on-coming header it is assumed that CCWS flow to each of the two common headers (including CVCS) is still available from any of the 4 CCWS trains. Two trains of CVCS normally supply RCP seal injection while CCWS flow to the thermal barriers is restored. The one out of two logic for the initial supply valves plus the one out of two logic for the initial return valves to close allowing the transfer to complete by opening the on-coming header valves confirms that CCWS flow will be restored to the thermal barriers in the event of a LOOP with a single failure of a diesel generator or a LOOP with a single failure of one of the off-going header valves in mid-position.

Table 9.2.2-6—Component Cooling Water System - Failure Modes and Effects Analysis
Sheet 22 of 25

Component Name	Identifier	Component Function	Failure Mode	Failure Mechanism	Failure Effect	Mission Success	Comments / Actions
Non-Safety Related Common Operating Load (1/2)B Isolation Valves	KAB80 AA015 KAB50 AA001 (CCW Supply first isolation) KAB80 AA016 KAB50 AA006 (CCW Supply second isolation) KAB80 AA019 KAB50 AA004 (CCW Return isolation)	Normally open; automatically closed to shed non-safety-related heat loads on receipt of SIS signal.	Fails to Open	Mechanical, Electrical, I&C	If any ONE of these isolation valves fails to OPEN, then CCW cooling cannot be provided to the non-safety related components and systems on the affected side of the plant. Loss of a CCW flow path to the non-safety related loads supplied by the Common Operating Loads (1.B/2.B) has no deleterious effect on the ability of the CCW system to provide cooling to its safety-related loads.	**50) Mission Success Criteria are met.** With one CCW train out for maintenance, failure of one Isolation valve in the supply or return lines to the non-safety related loads on the complementary CCW train does not further constrain any safety-related CCW cooling loads. This leaves at minimum: 3 CCW trains operable, including the affected train 2 SFP Cooling HX operable 2 SCWS Water Cooled Chillers operable 2 CVCS charging pump operable 2 CVCS letdown HP cooler operable, and CCW supplying flow to all RCP thermal barriers.	Check valve KAB80 AA020 and KAB50 AA008 provide downstream isolation valve on CCW return lines. The Non-Safety user isolation valves (KAB80 AA015/016/019 and KAB50 AA001/004/006) are designed to fail closed on loss of power to the hydraulic actuation circuit. Each Non-Safety user isolation valve has multiple solenoid operated pilot valves and hydraulic fluid pumps. The solenoid operated pilot valves and hydraulic fluid pumps are each powered from different Class 1E divisions to provide redundancy.
			Fails to Close	Mechanical, Electrical, I&C	If any ONE of these isolation valves fails to CLOSE, the isolation function is fulfilled by the redundant isolation valve on the supply or return side.	**51) Mission Success Criteria are met.** Results bounded by 50) above.	
Safety Chilled Water System Condensers 2/3	QKA20 AC002 QKA30 AC002	Safety Chilled Water System (QKA) Divisions 2 and 3 cool Main Control Room ventilation and Safeguards Buildings 2 and 3. SCWS Divisions 2 and 3 each contain one 100% refrigerating chiller unit with a water cooled condenser. Circulating refrigerant vaporizes to remove heat from the SCWS (QKA) side in the chiller, and transports that heat to the condenser. CCW condenses the circulating refrigerant in the condenser, removing the heat from the SCWS. The circulating refrigerant returns to the chiller to repeat the cycle.	Tube Rupture: CCW leaks to SCWS water-cooled Condenser	Mechanical	Because the SCWS and CCW are separated by a closed refrigerant loop circulating between the condenser (QKA20/30 AC002) and chiller (QKA20/30 AC001), a tube rupture does not result in transfer of water inventory between the two systems. A tube rupture in condenser QKA20/30 AC002 results in CCW leakage to the circulating refrigerant loop, continuing until the pressure of that loop equalizes with CCW pressure. Dilution of the circulating refrigerant reduces its ability to transfer heat from the SCWS in the chiller to the CCW system in the condenser. There are no automatic isolation features on either the CCW side or the circulating refrigerant side of the SCWS condensers. There will be a reduction of CCW surge tank level on the affected train.	**52) Mission Success Criteria are met.** With one CCW train out for maintenance, a CCW leak to the circulating refrigerant in the SCWS water-cooled condenser removes one of the two 100% water-cooled SCWS divisions from service. If this occurs during/after a DBA, the impact on CCW capacity is bounded by 1) above, and leaves at minimum: 3 CCW trains operable, including affected train 2 SFP Cooling HX operable 2 SCWS Water Cooled Chillers operable 2 CVCS charging pump operable 2 CVCS letdown HP cooler operable, and CCW supplying flow to all RCP thermal barriers.	Operator action may be required to align Main Control Room HVAC to the unaffected SCWS Division (2/3).

Table 9.2.2-6—Component Cooling Water System - Failure Modes and Effects Analysis
Sheet 23 of 25

Component Name	Identifier	Component Function	Failure Mode	Failure Mechanism	Failure Effect	Mission Success	Comments / Actions
Safety Chilled Water System Condenser 2/3 CCW Recirculation Flow Control Valves	KAA22 AA101 KAA32 AA101	Position varies based on SCWS chiller internal temperature. For high SCWS temperature, valve moves to increase CCW return flow and reduce CCW recirculation to cooler inlet, thus reducing CCW temperature at cooler inlet. For low SCWS temperature, valve moves to reduce CCW return flow and increase CCW recirculation to cooler inlet, thus raising CCW temperature at cooler inlet.	Fails to move towards increased CCW return flow (Open)	Mechanical, Electrical, I&C	Failure to increase CCW return flow maintains recirculation of a portion of CCW outlet flow back to the inlet side of the SCWS water-cooled condenser in spite of increasing heat load on the QKA side. The result is a loss of cooling to the QKA system, and rising ambient temperatures in the MCR and safeguard building cooled by the affected QKA train. This event has no impact on the CCW capability to cool other safety-related loads.	**53) Mission Success Criteria are met.** With one CCW train out for maintenance, a failure of the CCW recirculation control valve reduces the cooling capacity for one of two 100% water-cooled SCWS divisions. If this occurs during/after a DBA, the impact on CCW capacity is bounded by 1) above, and leaves at minimum: 3 CCW trains operable, including affected train 2 SFP Cooling HX operable 2 CVCS charging pump operable 2 CVCS letdown HP cooler operable, and CCW supplying flow to all RCP thermal barriers.	
			Fails to move towards reduced CCW return flow (Closed)	Mechanical, Electrical, I&C	Failure to reduce CCW return flow maintains recirculation of a portion of CCW outlet flow back to the inlet side of the SCWS water-cooled condenser in spite of decreasing heat load on the QKA side. The result is overcooling of the QKA system, and decreasing ambient temperatures in the MCR and safeguard building cooled by the affected QKA train. This event has no impact on the CCW capability to cool other safety-related loads.	**54) Mission Success Criteria are met.** Results bounded by 53) above.	.
			Fails in Intermediate Position	Mechanical, Electrical, I&C	Failure of the SCWS condenser CCW recirculation flow control valves in the intermediate position is bounded by failure to move toward increased CCW return flow (open) and failure to move toward reduced CCW return flow (closed).	**55) Mission Success Criteria are met.** Results bounded by 53) and 54) above.	

Table 9.2.2-6—Component Cooling Water System - Failure Modes and Effects Analysis
Sheet 24 of 25

Component Name	Identifier	Component Function	Failure Mode	Failure Mechanism	Failure Effect	Mission Success	Comments / Actions
Solenoid Operated Pilot Valves for Hydraulic Operated valves	None	Controls flow of hydraulic fluid to actuator for hydraulically actuated valves to open / close.	Fails on demand	Mechanical, Electrical, I&C	Hydraulic circuits fail on demand to provide or stop flow to actuators as required for hydraulically actuated valve to open / close.	**56) Mission Success Criteria are met.** Results bounded by 18), 19) and 20) above for SFP switchover isolation valves.	The common header switchover valves (KAA10/20/30/40 AA006/010/032/033) are designed to fail as-is on loss of power to the hydraulic power circuit. Each common header switchover valve has multiple solenoid operated pilot valves and hydraulic fluid pumps. The solenoid operated pilot valves and hydraulic fluid pumps are each powered from different Class 1E divisions to provide reliability of the switchover function.
						57) Mission Success Criteria are met. Results bounded by 29), 30) and 31) above for Common 1.B / 2.B switchover isolation valves.	
						58) Mission Success Criteria are met. Results bounded by 50) and 51) above for Non-Safety related CCWS user isolation valves.	The Non-Safety user isolation valves (KAB80 AA015/016/019 and KAB50 AA001/004/006) are designed to fail closed on loss of power to the hydraulic power circuit. Each Non-Safety user isolation valve has multiple solenoid operated pilot valves and hydraulic fluid pumps. The solenoid operated pilot valves and hydraulic fluid pumps are each powered from different Class 1E divisions to provide redundancy.
CCW Pump	KAA10 AP001 KAA20 AP001 KAA30 AP001 KAA40 AP001	Prime mover to provide cooling water flow through system piping of respective train. Automatically started on Safety Injection Signal to align CCW trains to remove heat from associated LHSI trains for DBA cooldown.	Fails while running	Air Intrusion	One CCW pump fails while in service. In NPO, loss of the CCW pump and/or loss of flow in the Common 'B' loop served by that pump initiate an Automatic Backup Switchover Sequence (ABSS). The sequence automatically: Closes all supply and return switchover isolation valves in the affected CCW train. Opens the Common 'B' loop supply and return switchover isolation valves on the complementary CCW train. Opens the SIS/RHR HX CCW inlet flow control valve on the complementary train. Starts the complementary CCW pump, restoring flow to the Common 'B' operating loads on that side of the plant.	**59) Mission Success Criteria are met.** Results bounded by 3) above.	The CCWS system has no connection with compressed air systems inside the plant therefore the potential for air intrusion in the CCWS system piping from compressed air systems does not exist. To prevent air intrusion from the surge tank through the pump suction line, the minimum water level in any CCWS surge tank is calculated per ANSI/HI 9.8 (1998). This minimum water level will be set as MIN4 level in each tank. MIN4 is the level that trips the operating CCWS pump.

Table 9.2.2-6—Component Cooling Water System - Failure Modes and Effects Analysis
Sheet 25 of 25

Component Name	Identifier	Component Function	Failure Mode	Failure Mechanism	Failure Effect	Mission Success	Comments / Actions
CCWS Surge Tank Level Instrumentation	KAA10/20/30/40 CL094 KAA10/20/30/40 CL099	Monitors CCW surge tank level; Monitor system leakage per TS SR 3.7.7.2; MAX1 level signal automatically isolates makeup from Demin Water system via closure of KAA10/20/30/40 AA027; MIN1 level signal automatically opens the Demin Water system makeup valve (KAA10/20/30/40 AA027); MIN2 level signal concurrent with high inlet / outlet flow differential in the Non-safety related user branch automatically isolates the non-safety related users outside the reactor building via closure of valves KAB80 AA015/016/019 and KAB50 AA001/004/006; a MIN2 level also inhibits the common header valve switchover sequence (automatic and normal); MIN3 level signal automatically isolates the common headers via closure of valves KAA10/20/30/40 AA006/010/032/033 and the switchover sequence is prohibited; MIN4 level signal trips the operating CCWS pump which automatically starts the associated train pump for that common header and unlocks the switchover sequence function.	Fails to properly automatically actuate on various surge tank level indications or transmit surge tank level	Mechanical, Electrical, I&C	Failure of the surge tank instrumentation to properly automatically actuate on a MAX1 level (which isolates demin water makeup) could lead to a high-high level in the surge tank with tank inventory being lost into the drain system via the tank overflow line. Failure of the surge tank instrumentation to properly automatically actuate on a MIN1 level (which initiates makeup from demin water) could lead to a MIN2 level at which time the non-safety users are isolated. Failure of the surge tank instrumentation to properly automatically actuate on a MIN2 level (which isolates non-safety related users with a concurrent high inlet / outlet flow differential) could lead to a MIN3 level at which time the common header is isolated. Failure of the surge tank instrumentation to properly automatically actuate on a MIN3 level (which isolates the common header) could lead to a MIN4 level at which time the operating pump is tripped and the associated train pump for the common header is automatically started. Failure of the surge tank instrumentation to properly automatically actuate on a MIN4 level could lead to the operating pump running without adequate NPSH and prevent the associated train pump for the common header from starting.	**60) Mission Success Criteria are met.** Failure to properly automatically actuate on a MAX1 level does not prevent a CCWS pump from operating. This would leave 4 of 4 CCWS train operable. Failure of the instrumentation to properly automatically actuate on MIN1, MIN2, MIN3 and MIN4 levels could ultimately lead to a failure of two CCWS trains. This would potentially be due to the fact that one train could have insufficient surge tank capacity to operate the pump and the associated train pump for that common header may not have started. 2 CCWS trains inoperable leaves at minimum 2 CCW trains operable on one side of the plant, 1 SFP Cooling HX operable 1 SCWS Water Cooled Chiller operable 1 CVCS charging pump operable 1 CVCS letdown HP cooler operable, and CCW able to supply flow to all RCP thermal barriers – but may require operator action to restore cooling flow. Results bounded by 2) above.	Failure of level instrumentation to properly automatically actuate on any surge tank level indication will lead to manual operator actions. Operating procedures will direct the automatic actions to be manually backed up. If an automatic action is to occur and does not properly function, operators are to take manual actions to complete that action.

Next File

Table 9.2.2-7—CCWS Heat Load Summary

CCWS Operational Alignment	Heat Load (10^6 BTU/hr)
RCS Heat-up CCWS Train 1or 2 Connected to Common 1	108.38
RCS Heat-up CCWS Train 3 or 4 Connected to Common 2	124.93[1]
RCS Cooldown CCWS Train 1 or 2 Connected to Common 1 Plus Train Specific SIS Users	120
RCS Cooldown CCWS Train 3 or 4 Connected to Common 2 Plus Train Specific SIS Users	97.52
RCS Cooldown CCWS Trains Not Connected to a Common Header	153.06
DBA - CCWS Train 1 or 2 aligned to Common 1 Header	293.35
DBA - CCWS Train 3 or 4 aligned to Common 2 Header	292.95

Notes:

1. Current analysis assuming a representative constant heat transfer coefficient indicates that 124.93 MBTU/hr combined with CCWS and ESWS flow rates will require the greatest heat transfer area for the CCWS heat exchanger. For final procurement, a 10 percent margin for tube plugging will be required. The DBA case will require a minimum additional margin of 10 percent above the specified 10 percent tube plugging allowance.

Table 9.2.2-8—CCWS Pump Flow Summary

CCWS Operational Alignment	CCWS Pump Discharge Flow (10^6 lbm/hr)[1]	CCWS Pump Discharge Flow (gpm) [1]
Normal Operation; CCWS Train 1 or 2 Connected to Common 1 Plus Train Specific SIS Users	7.5	15494
Normal Operation; CCWS Train 3 or 4 Connected to Common 2 Plus Train Specific SIS Users	7.678	15862
DBA - CCWS Train 1 or 2 aligned to Common 1 Header	4.434	9160
DBA - CCWS Train 3 or 4 aligned to Common 2 Header	4.419	9129

Notes:

1. The total required pump flow in each alignment includes recirculation flow to each CCWS surge tank. The margins discussed in Section 9.2.2 are applied to the highest calculated required flow. Applying the margin to the largest calculated total flow requirement envelopes the required flow for all CCWS pumps in any operating mode.

Next File

Figure 9.2.2-1—Component Cooling Water System Trains 1 through 4
Sheet 1 of 2

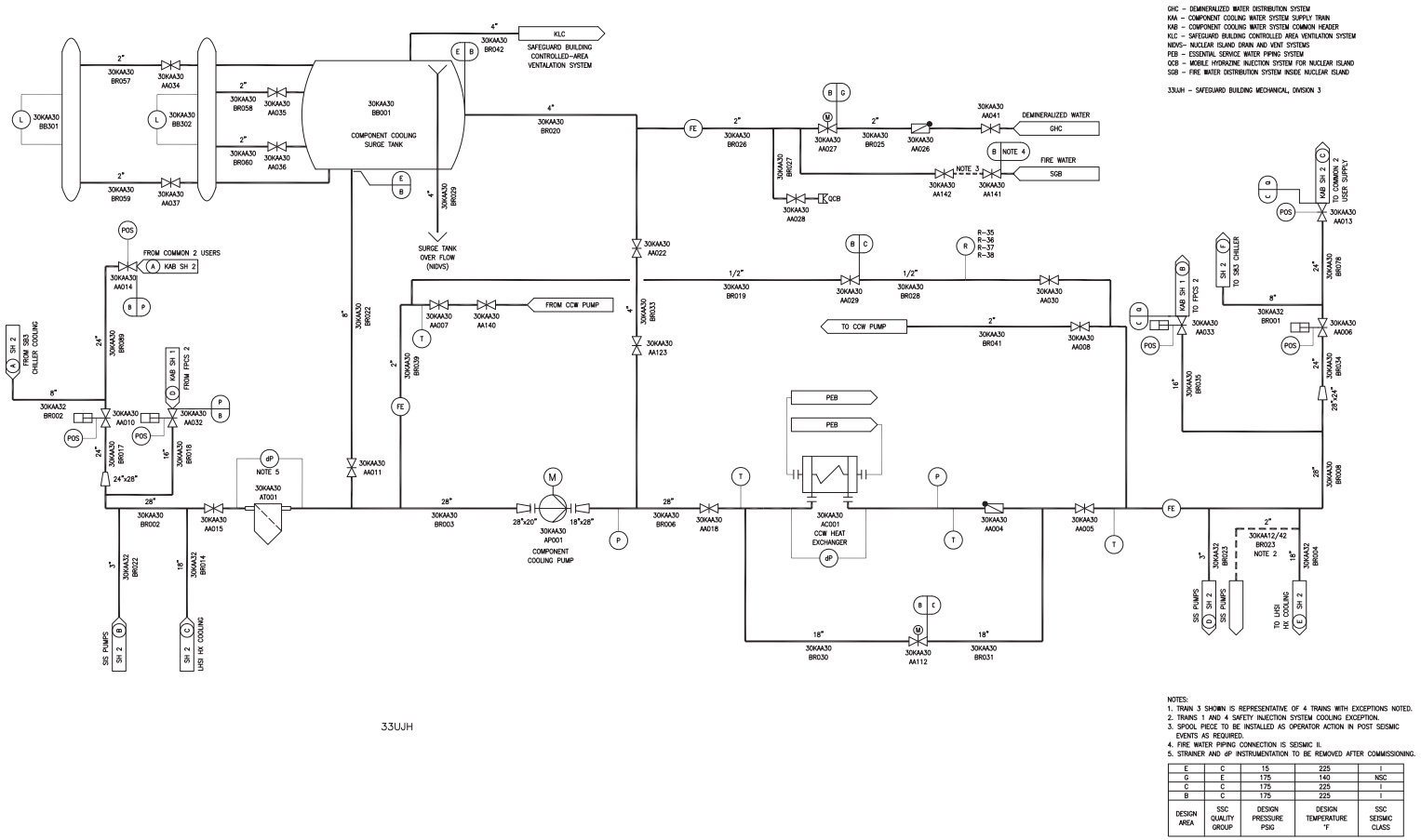

NOTES:
1. TRAIN 3 SHOWN IS REPRESENTATIVE OF 4 TRAINS WITH EXCEPTIONS NOTED.
2. TRAINS 1 AND 4 SAFETY INJECTION SYSTEM COOLING EXCEPTION.
3. SPOOL PIECE TO BE INSTALLED AS OPERATOR ACTION IN POST SEISMIC EVENTS AS REQUIRED.
4. FIRE WATER PIPING CONNECTION IS SEISMIC II.
5. STRAINER AND dP INSTRUMENTATION TO BE REMOVED AFTER COMMISSIONING.

DESIGN AREA	SSC QUALITY GROUP	DESIGN PRESSURE PSIG	DESIGN TEMPERATURE °F	SSC SEISMIC CLASS
E	C	15	225	I
G	E	175	140	NSC
C	C	175	225	I
B	C	175	225	I

REV 003
KAA01T2

Figure 9.2.2-1—Component Cooling Water System Trains 1 through 4
Sheet 2 of 2

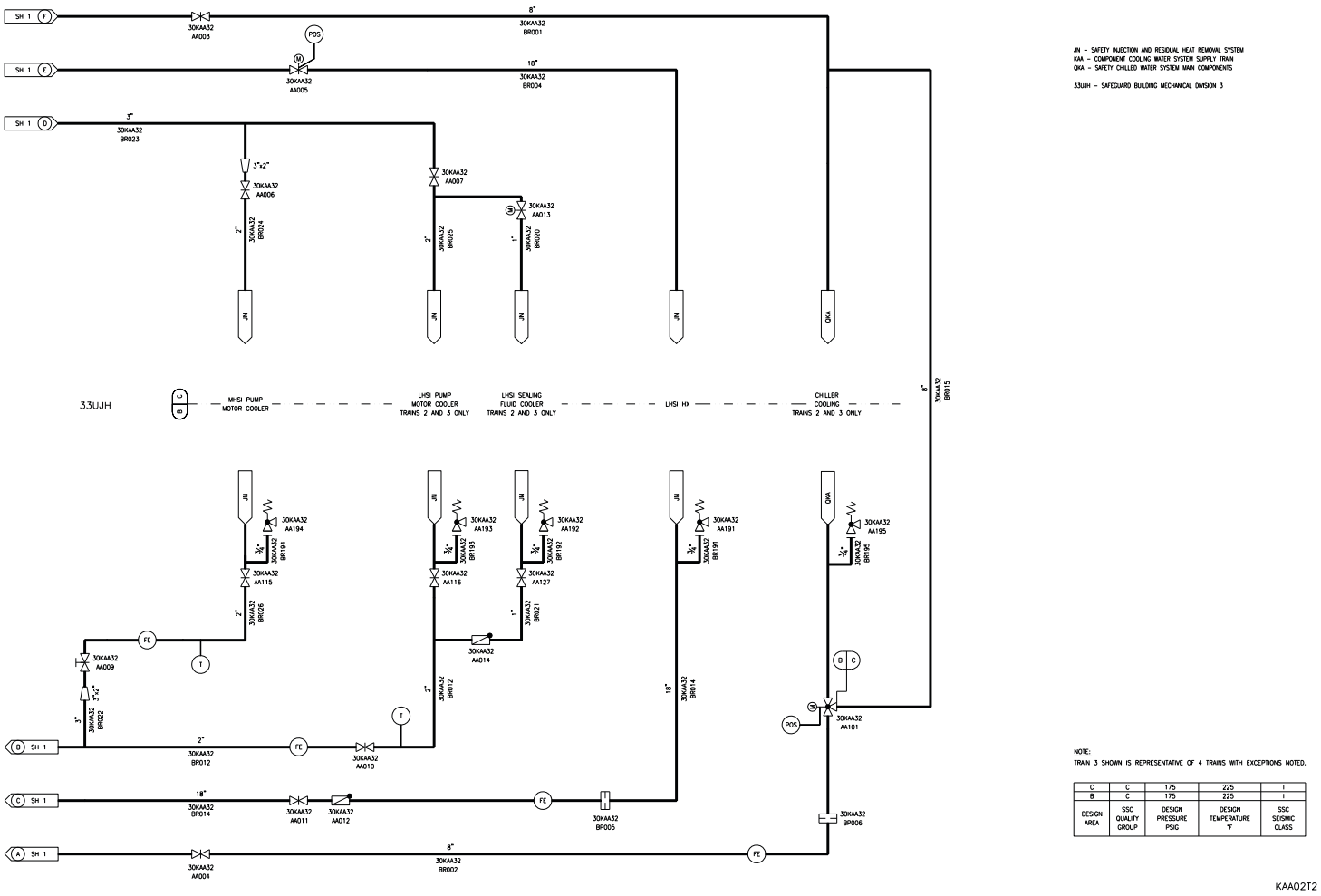

JN – SAFETY INJECTION AND RESIDUAL HEAT REMOVAL SYSTEM
KAA – COMPONENT COOLING WATER SYSTEM SUPPLY TRAIN
OKA – SAFETY CHILLED WATER SYSTEM MAIN COMPONENTS

33UJH – SAFEGUARD BUILDING MECHANICAL DIVISION 3

NOTE:
TRAIN 3 SHOWN IS REPRESENTATIVE OF 4 TRAINS WITH EXCEPTIONS NOTED.

C	C	175	225	I
B	C	175	225	I
DESIGN AREA	SSC QUALITY GROUP	DESIGN PRESSURE PSIG	DESIGN TEMPERATURE °F	SSC SEISMIC CLASS

KAA02T2

Figure 9.2.2-2—Component Cooling Water System Common Loop 1
Sheet 1 of 7

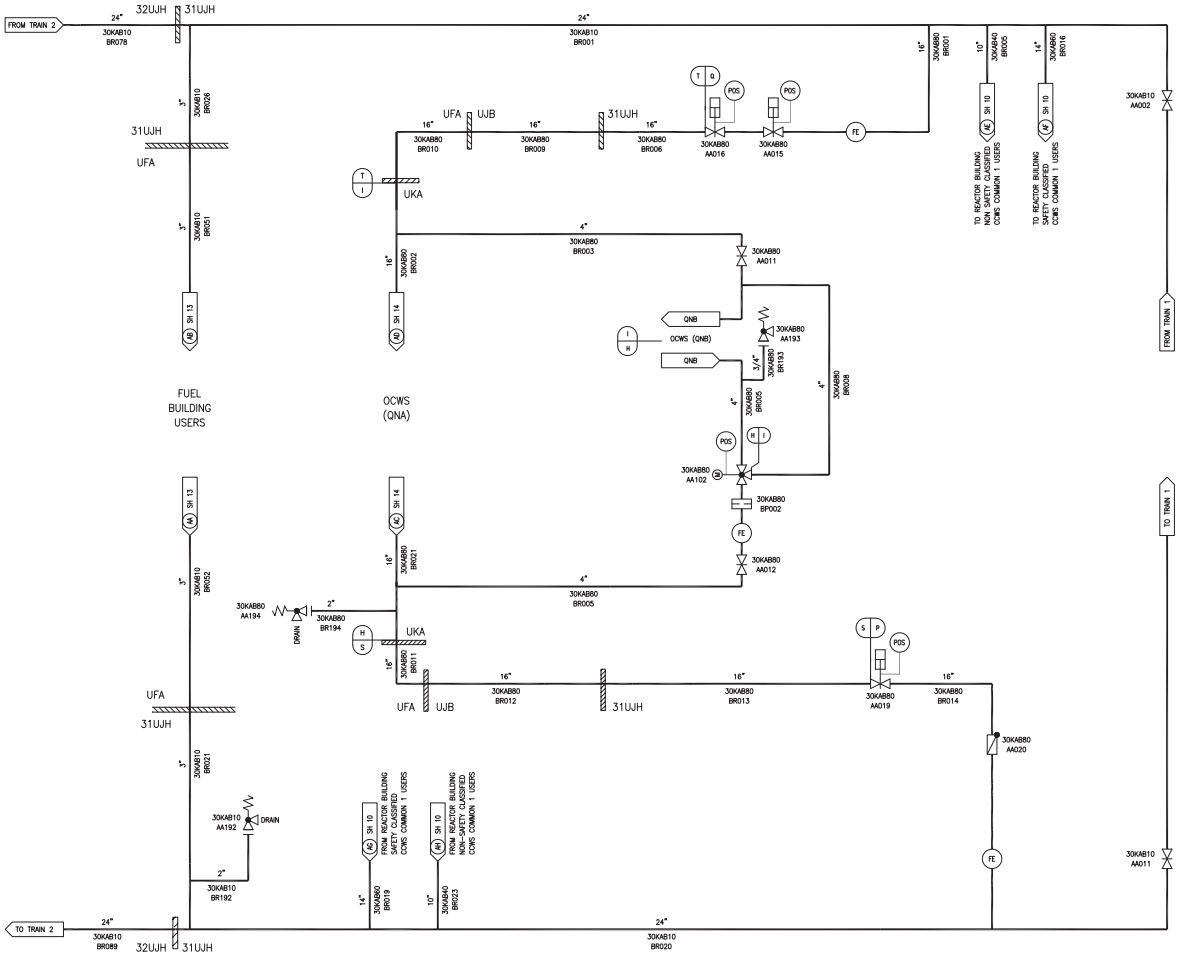

KAA – COMPONENT COOLING WATER SYSTEM SUPPLY TRAIN
KAB – COMPONENT COOLING WATER SYSTEM COMMON HEADER
QNA – OPERATIONAL CHILLED WATER SYSTEM
QNB – OPERATIONAL CHILLED WATER SYSTEM FOR GASEOUS WASTE PROCESSING SYSTEM

UFA – FUEL BUILDING
UJB – REACTOR BUILDING ANNULUS
UKA – NUCLEAR AUXILIARY BUILDING
31UJH – SAFEGUARD BUILDING MECHANICAL, DIVISION 1
32UJH – SAFEGUARD BUILDING MECHANICAL, DIVISION 2

NOTE:
CCWS TRAINS 1 AND 2 COMMON 1 HEADER SUPPLY.

T	E	175	225	NSC
S	E	175	225	NSC
I	E	175	225	NSC
H	E	175	225	NSC
P	C	175	225	I
Q	C	175	225	I
DESIGN AREA	SSC QUALITY GROUP	DESIGN PRESSURE PSIG	DESIGN TEMPERATURE °F	SSC SEISMIC CLASS

REV 002
KAB03T2

Figure 9.2.2-2—Component Cooling Water System Common Loop 1
Sheet 2 of 7

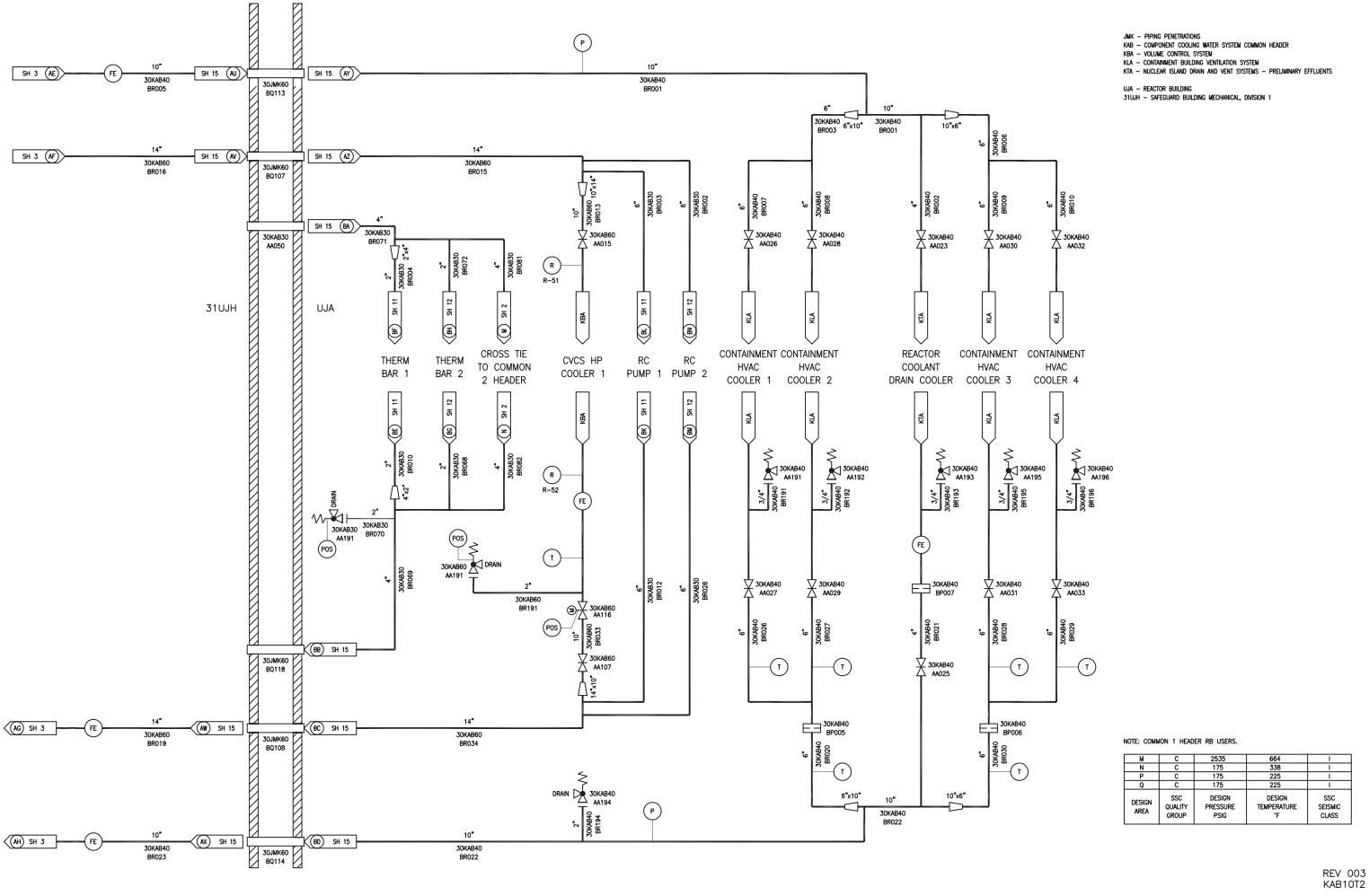

M	C	2535	664	I
N	C	175	338	I
P	C	175	225	I
Q	C	175	225	I
DESIGN AREA	SSC QUALITY GROUP	DESIGN PRESSURE PSIG	DESIGN TEMPERATURE °F	SSC SEISMIC CLASS

Figure 9.2.2-2—Component Cooling Water System Common Loop 1
Sheet 3 of 7

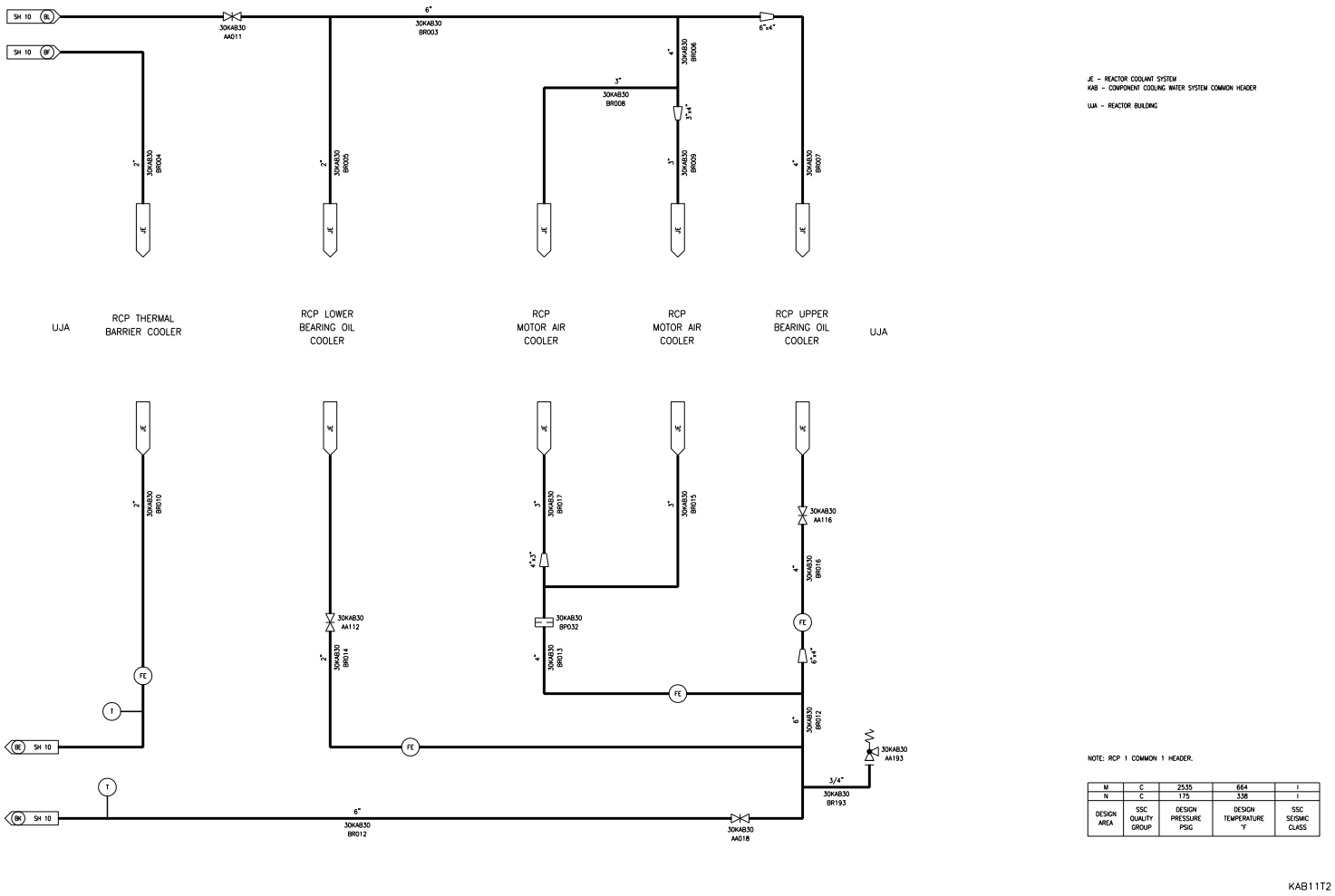

Figure 9.2.2-2—Component Cooling Water System Common Loop 1
Sheet 4 of 7

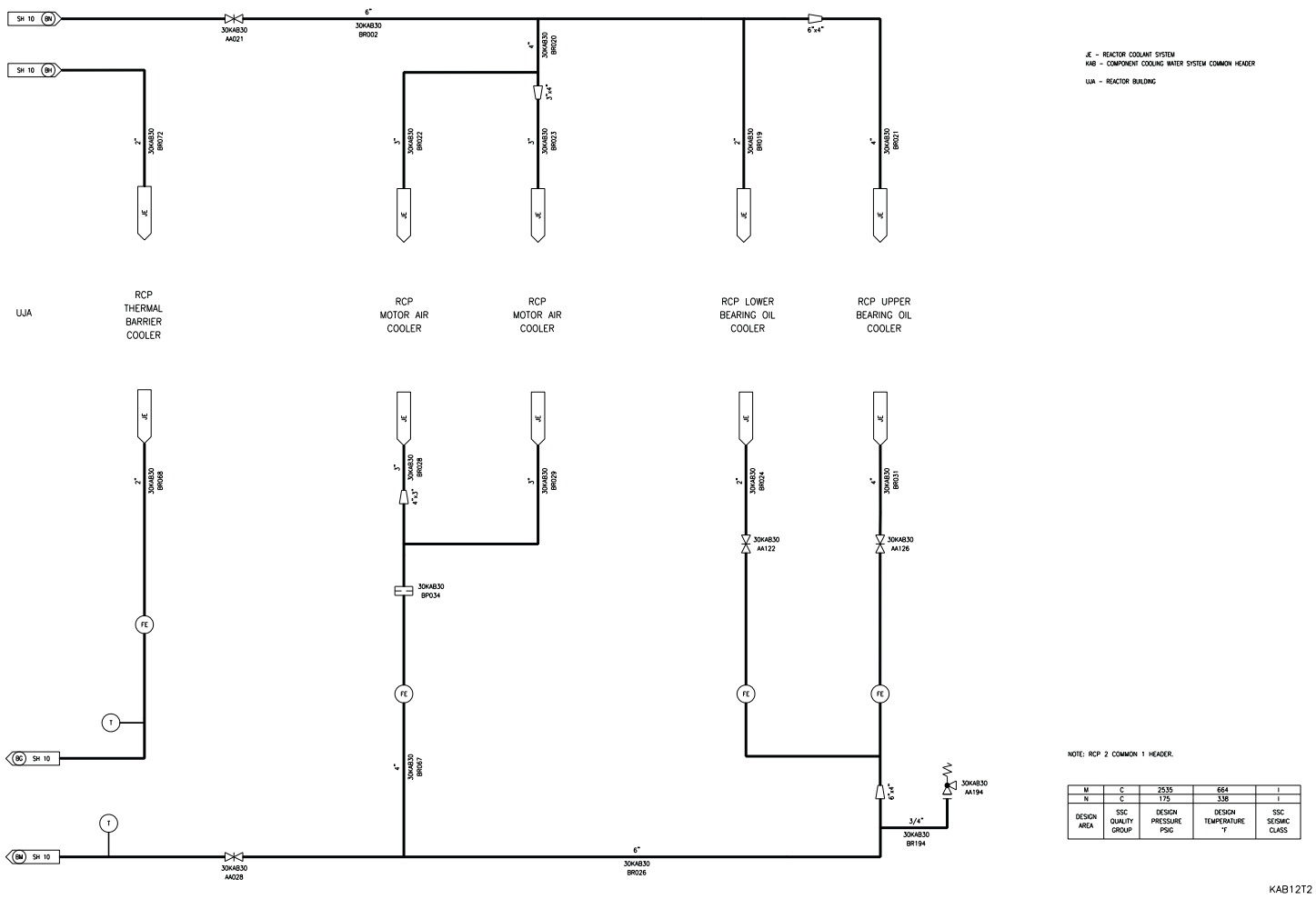

Figure 9.2.2-2—Component Cooling Water System Common Loop 1
Sheet 5 of 7

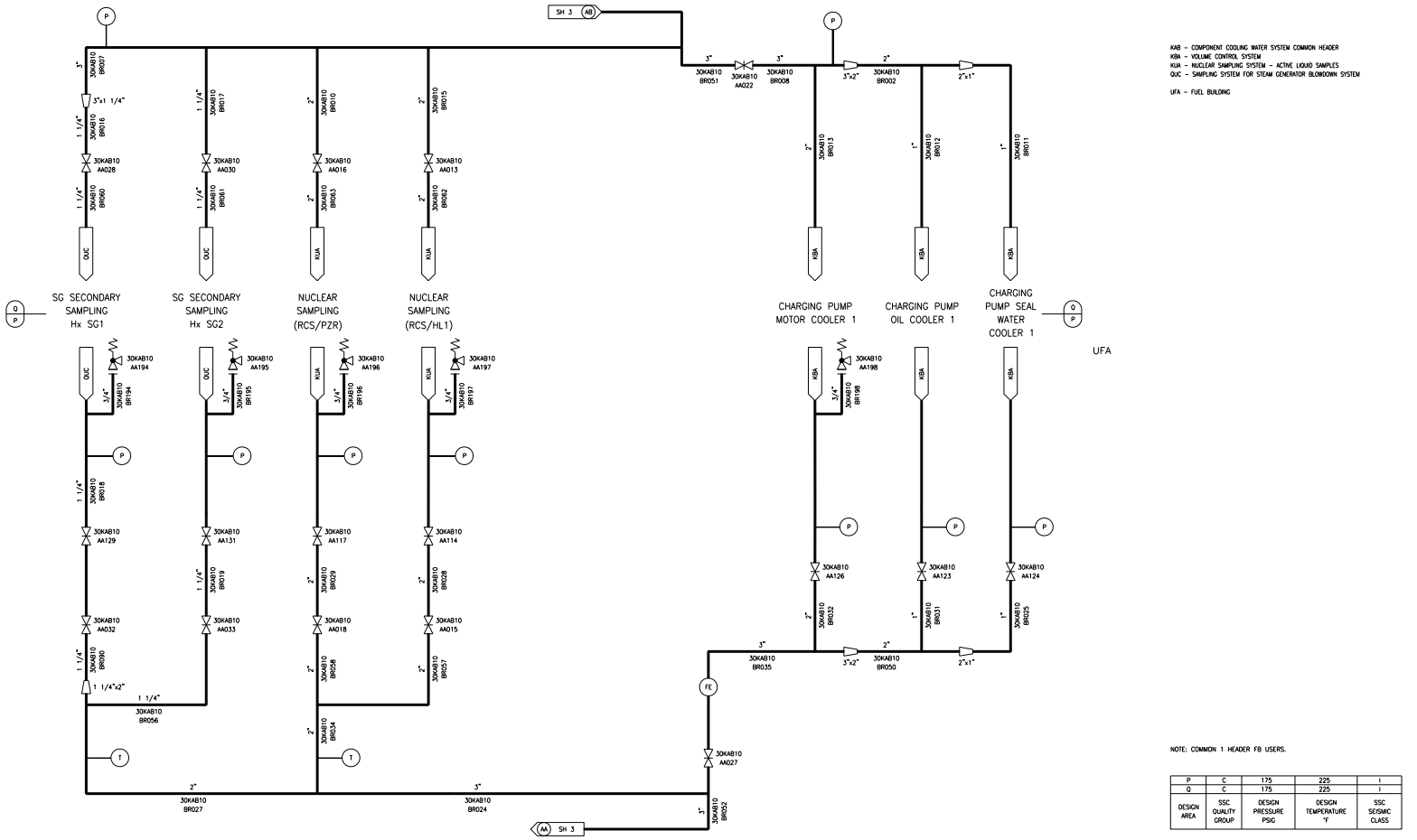

Figure 9.2.2-2—Component Cooling Water System Common Loop 1
Sheet 6 of 7

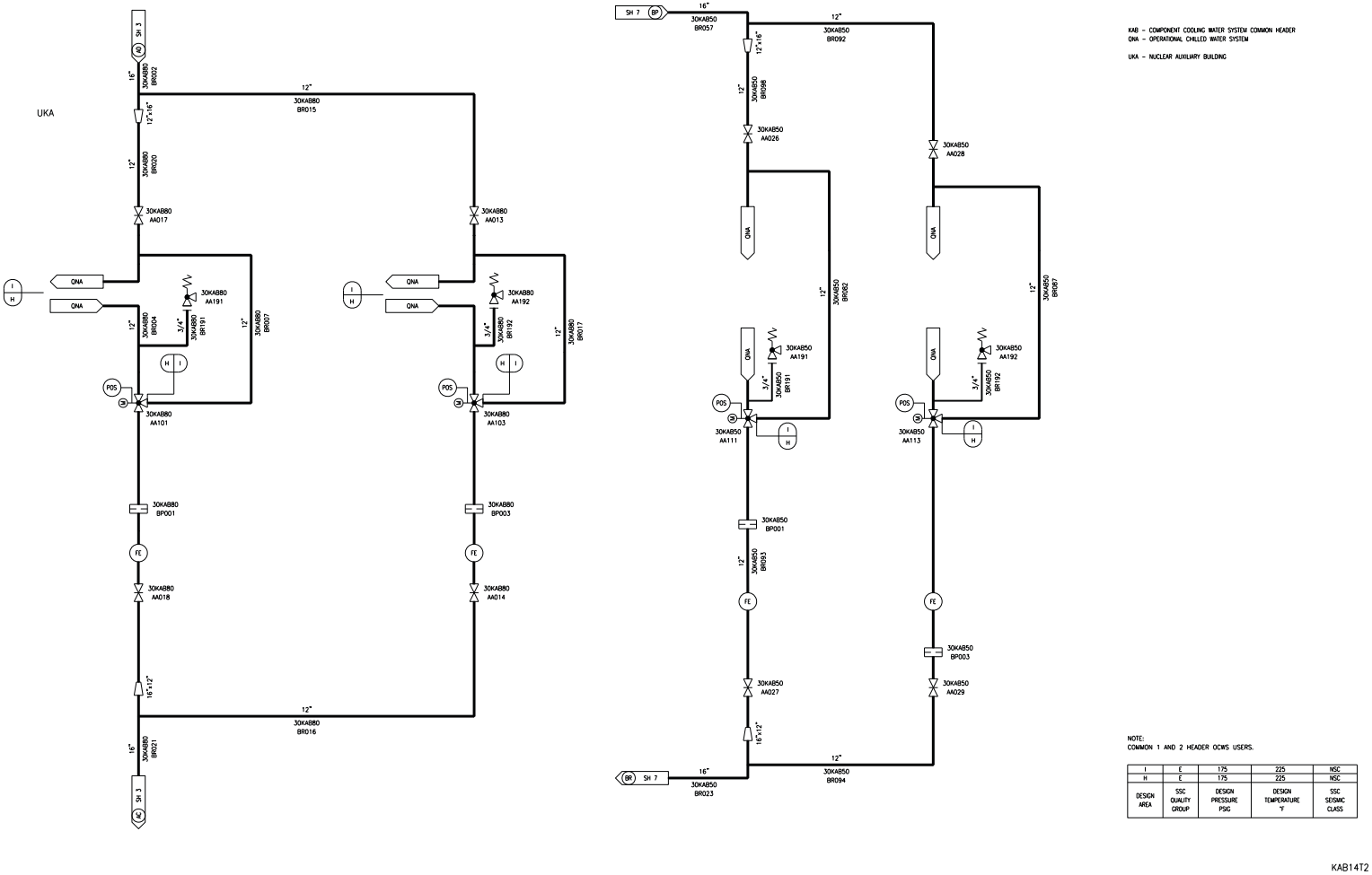

Figure 9.2.2-2—Component Cooling Water System Common Loop 1
Sheet 7 of 7

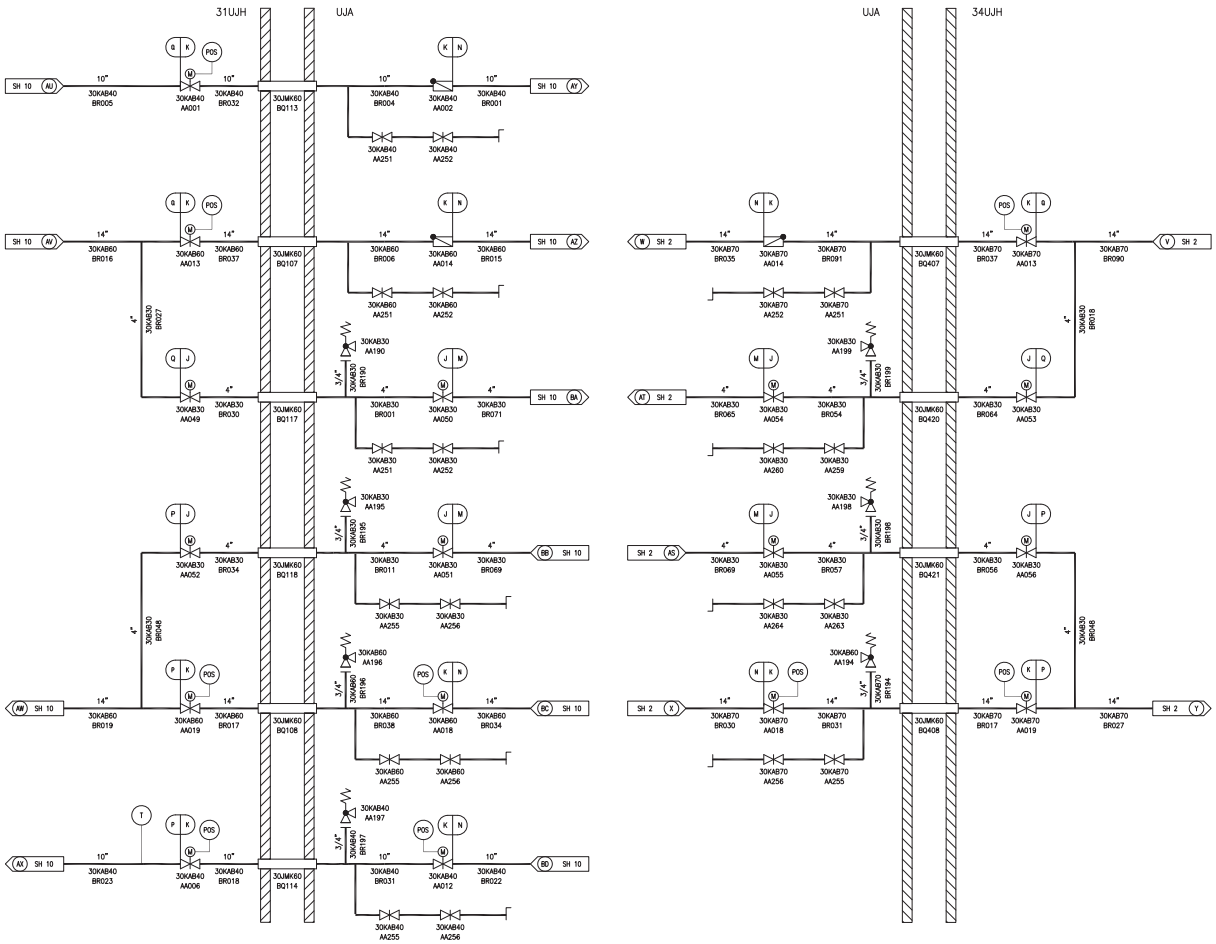

JMK – PIPING PENETRATIONS
KAB – COMPONENT COOLING WATER SYSTEM COMMON HEADER

UJA – REACTOR BUILDING
31UJH – SAFEGUARD BUILDING MECHANICAL, DIVISION 1
34UJH – SAFEGUARD BUILDING MECHANICAL, DIVISION 4

NOTE: COMMON 1 AND 2 CONTAINMENT PENETRATION DETAILS.

J	B	2535	664	I
M	C	2535	664	I
K	B	175	338	I
N	C	175	338	I
P	C	175	225	I
Q	C	175	225	I
DESIGN AREA	SSC QUALITY GROUP	DESIGN PRESSURE PSIG	DESIGN TEMPERATURE °F	SSC SEISMIC CLASS

REV 003
KAB15T2

Figure 9.2.2-3—Component Cooling Water System Common Loop 2
Sheet 1 of 8

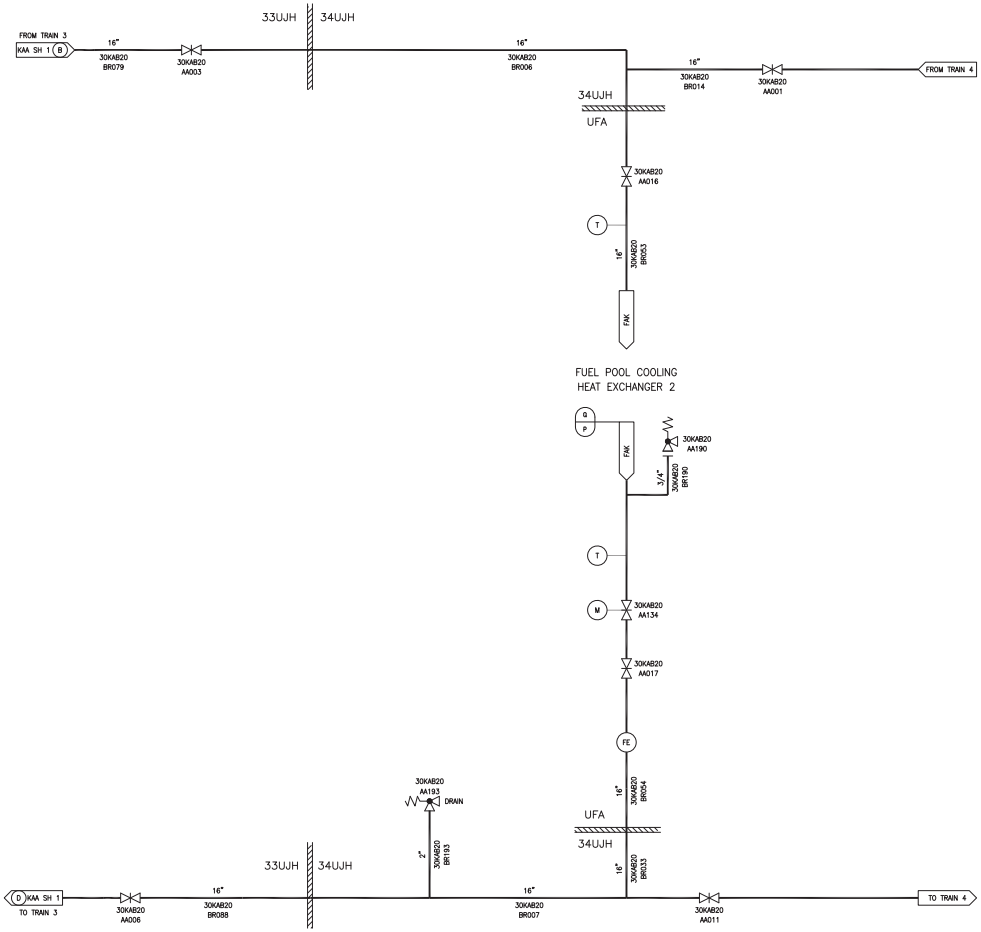

FAK – FUEL POOL COOLING SYSTEM
KAA – COMPONENT COOLING WATER SYSTEM SUPPLY TRAIN
KAB – COMPONENT COOLING WATER SYSTEM COMMON HEADER
KLL – FUEL BUILDING VENTILATION SYSTEM

UFA – FUEL BUILDING
33UJH – SAFEGUARD BUILDING MECHANICAL, DIVISION 3
34UJH – SAFEGUARD BUILDING MECHANICAL, DIVISION 4

NOTE:

CCWS TRAINS 3 AND 4 SUPPLYING FPCS TRAIN 2 SHOWN IS REPRESENTATIVE OF CCWS TRAINS 2 AND 1, RESPECTIVELY SUPPLYING FPCS TRAIN 1, WITH EXCEPTIONS AS NOTED.

P	C	175	225	I
Q	C	175	225	I
DESIGN AREA	SSC QUALITY GROUP	DESIGN PRESSURE PSIG	DESIGN TEMPERATURE °F	SSC SEISMIC CLASS

REV 002
KAB01T2

Figure 9.2.2-3—Component Cooling Water System Common Loop 2
Sheet 2 of 8

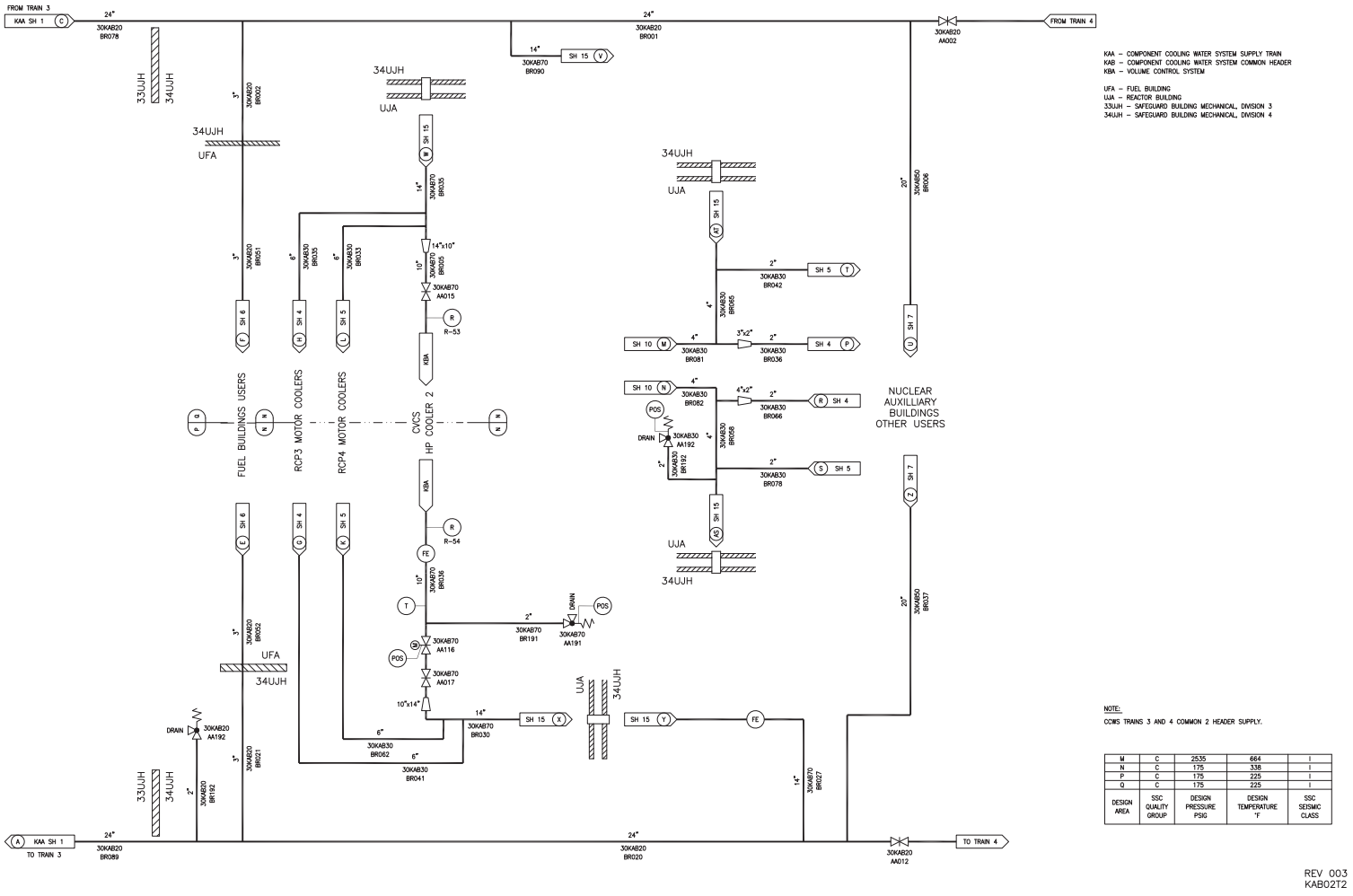

M	C	2535	664	I
N	C	175	338	I
P	C	175	225	I
Q	C	175	225	I
DESIGN AREA	SSC QUALITY GROUP	DESIGN PRESSURE PSIG	DESIGN TEMPERATURE °F	SSC SEISMIC CLASS

Figure 9.2.2-3—Component Cooling Water System Common Loop 2
Sheet 3 of 8

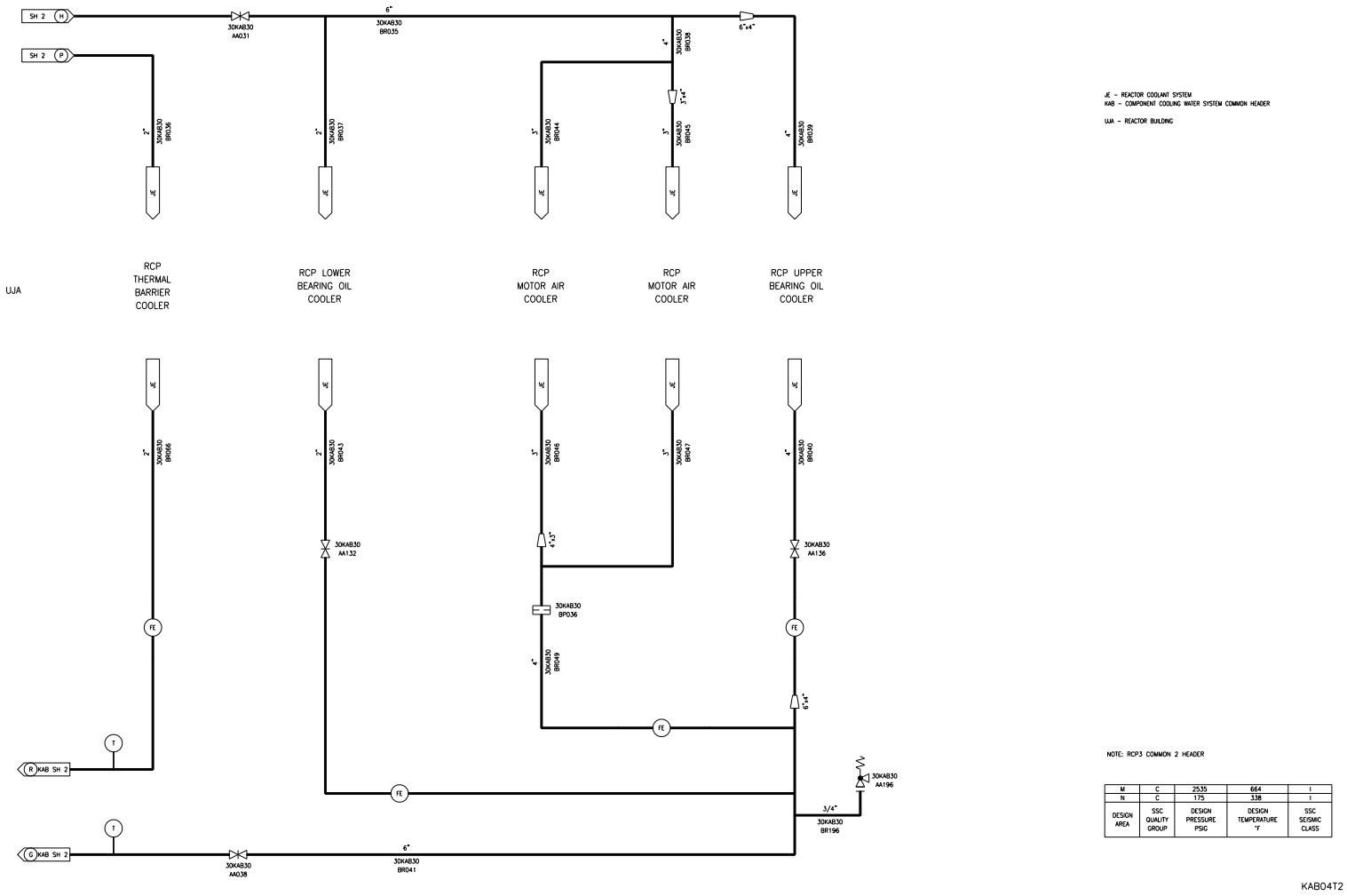

Figure 9.2.2-3—Component Cooling Water System Common Loop 2
Sheet 4 of 8

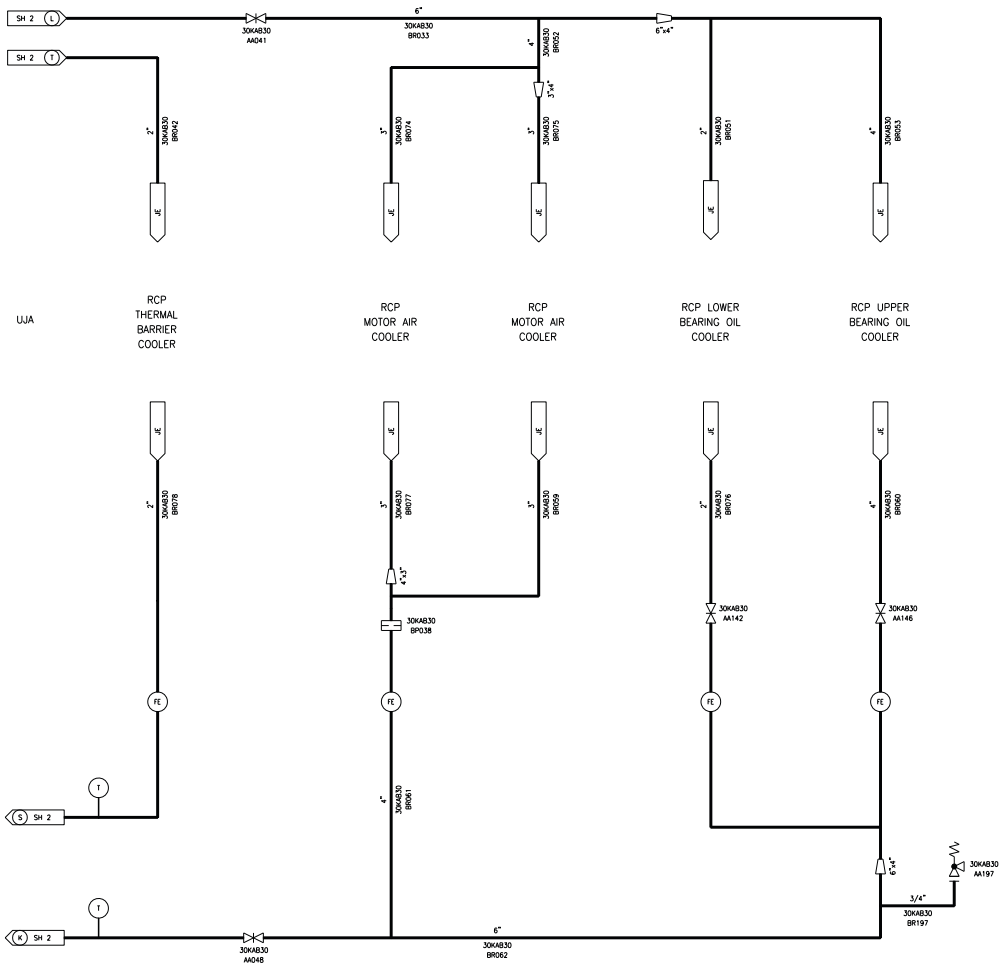

JE - REACTOR COOLANT SYSTEM
KAB - COMPONENT COOLING WATER SYSTEM COMMON HEADER

UJA - REACTOR BUILDING

NOTE: RCP4 COMMON 2 HEADER

M	C	2535	664	I
N	C	175	338	I
DESIGN AREA	SSC QUALITY GROUP	DESIGN PRESSURE PSIG	DESIGN TEMPERATURE °F	SSC SEISMIC CLASS

KAB05T2

Figure 9.2.2-3—Component Cooling Water System Common Loop 2
Sheet 5 of 8

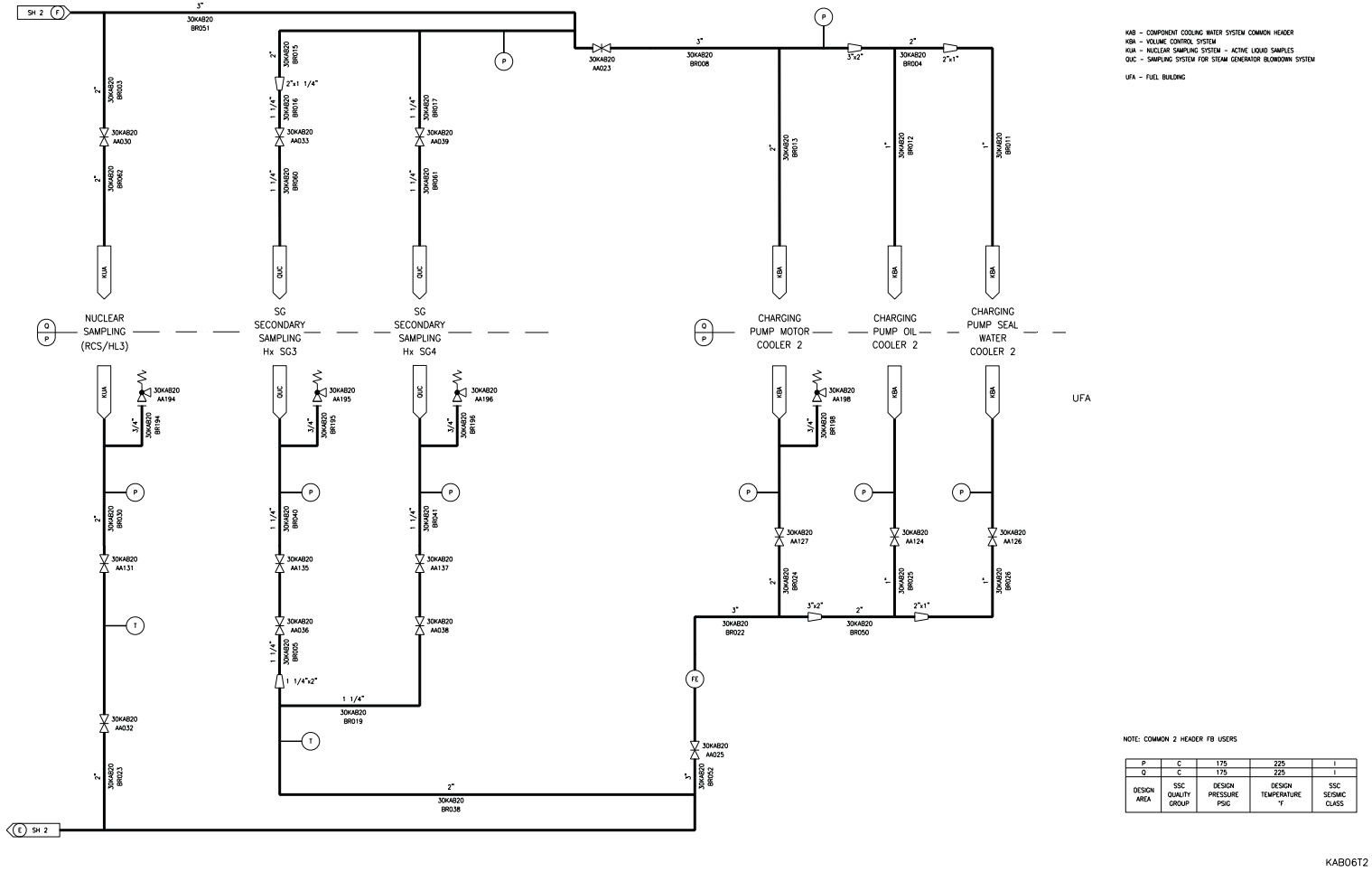

P	C	175	225	I
Q	C	175	225	I
DESIGN AREA	SSC QUALITY GROUP	DESIGN PRESSURE PSIG	DESIGN TEMPERATURE °F	SSC SEISMIC CLASS

Figure 9.2.2-3—Component Cooling Water System Common Loop 2
Sheet 6 of 8

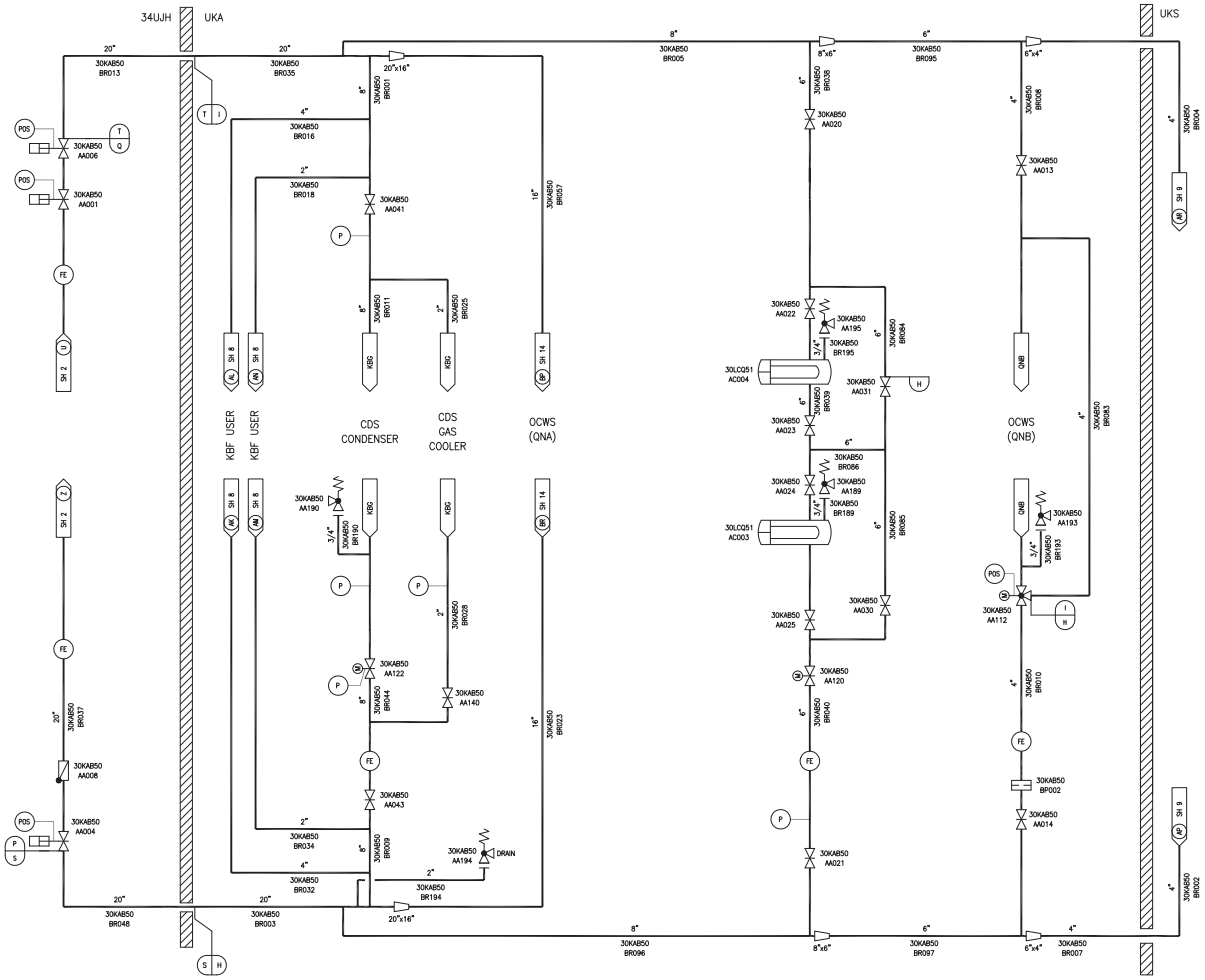

KAB – COMPONENT COOLING WATER SYSTEM COMMON HEADER
KBF – COOLANT TREATMENT SYSTEM
KBG – COOLANT DEGASSIFICATION SYSTEM
LCQ – STEAM GENERATOR BLOWDOWN SYSTEM
QNB – OPERATIONAL CHILLED WATER SYSTEM FOR GASEOUS WASTE PROCESSING SYSTEM

UKA – NUCLEAR AUXILIARY BUILDING
UKS – RADIOACTIVE WASTE PROCESSING BUILDING
34UJH – SAFEGUARD BUILDING MECHANICAL, DIVISION 4

NOTE:
COMMON 2 HEADER NAB AND RWPB USERS.

T	E	175	225	NSC
S	E	175	225	NSC
I	E	175	225	NSC
H	E	175	225	NSC
P	C	175	225	I
Q	C	175	225	I
DESIGN AREA	SSC QUALITY GROUP	DESIGN PRESSURE PSIG	DESIGN TEMPERATURE °F	SSC SEISMIC CLASS

REV 002
KAB07T2

Figure 9.2.2-3—Component Cooling Water System Common Loop 2
Sheet 7 of 8

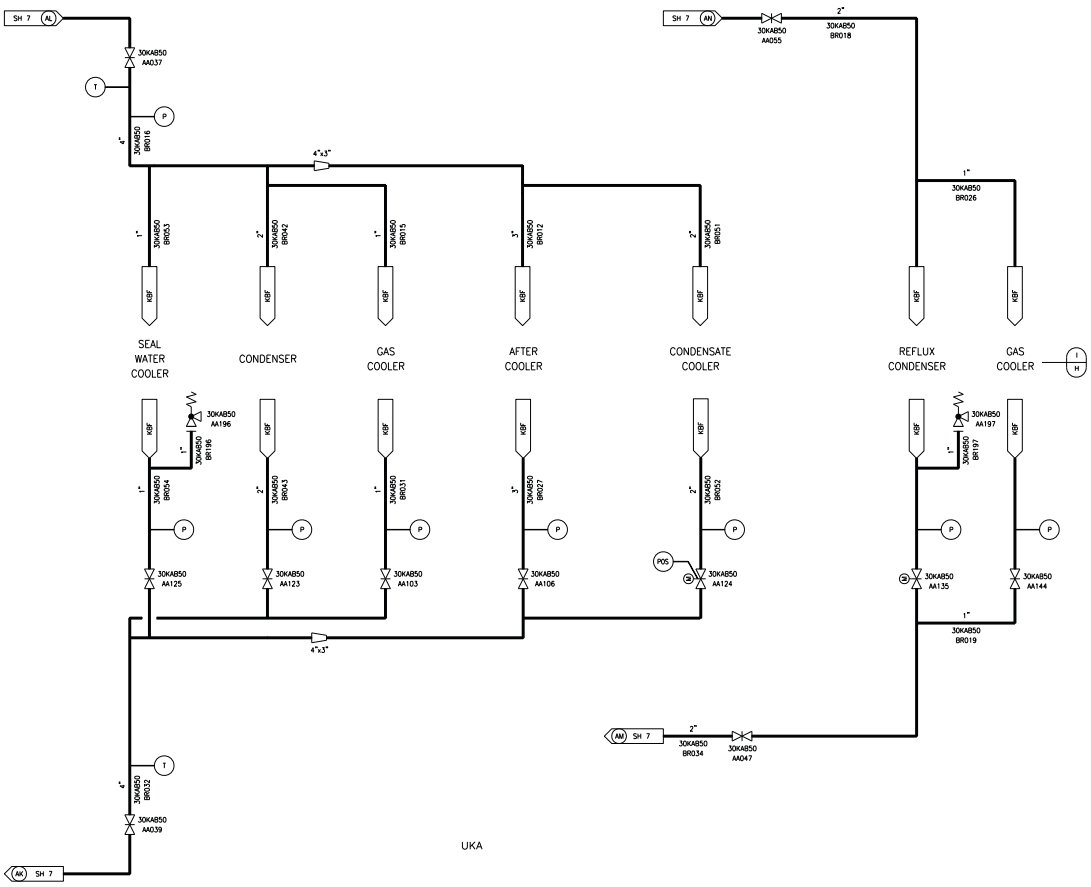

KAB – COMPONENT COOLING WATER SYSTEM COMMON HEADER
KBF – COOLANT TREATMENT SYSTEM

UKA – NUCLEAR AUXILIARY BUILDING

NOTE:
COMMON 2 HEADER NAB USERS.

I	E	175	225	NSC
H	E	175	225	NSC
DESIGN AREA	SSC QUALITY GROUP	DESIGN PRESSURE PSIG	DESIGN TEMPERATURE °F	SSC SEISMIC CLASS

KAB08T2

Figure 9.2.2-3—Component Cooling Water System Common Loop 2
Sheet 8 of 8

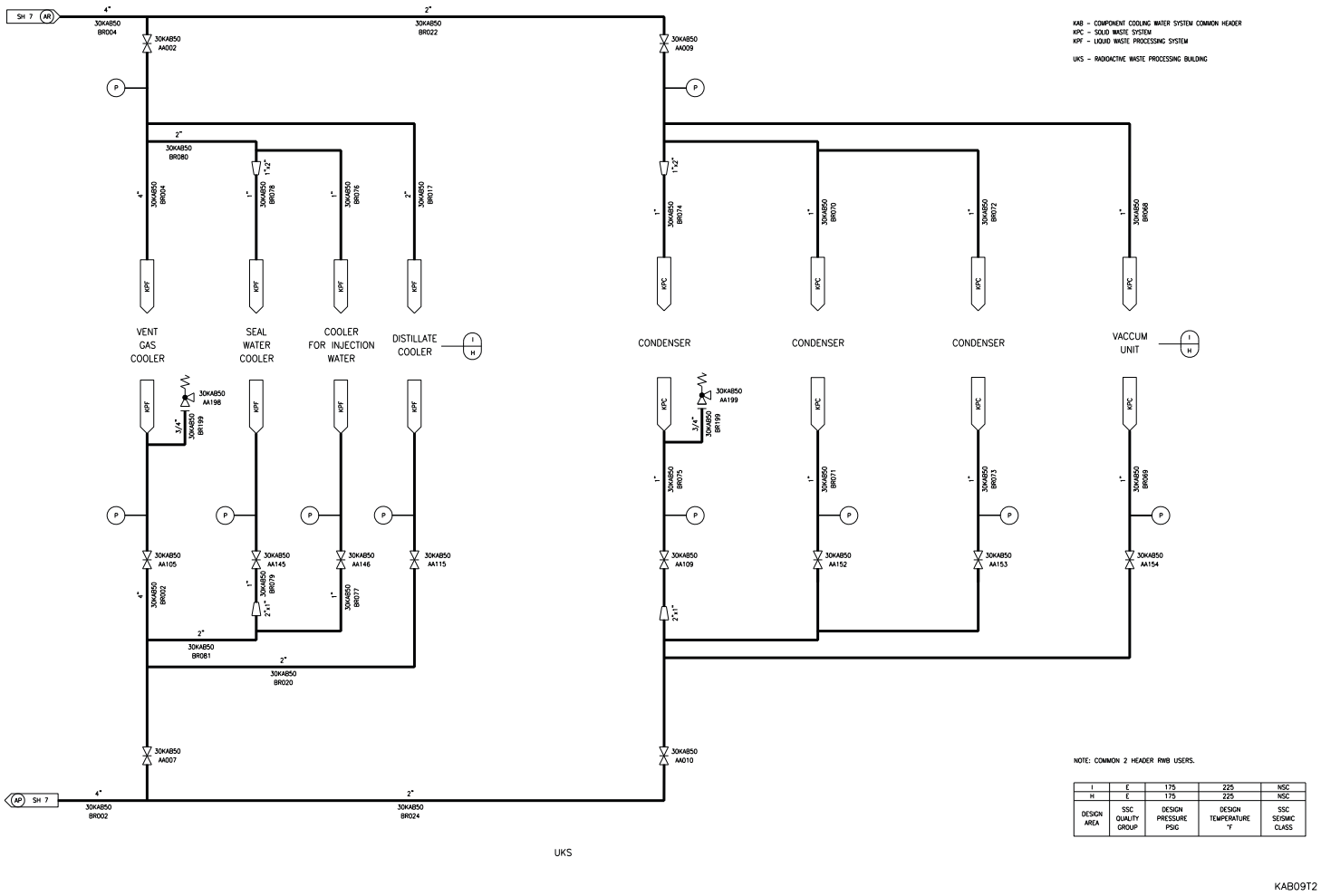

Figure 9.2.2-4—Component Cooling Water System Dedicated CCWS Trains

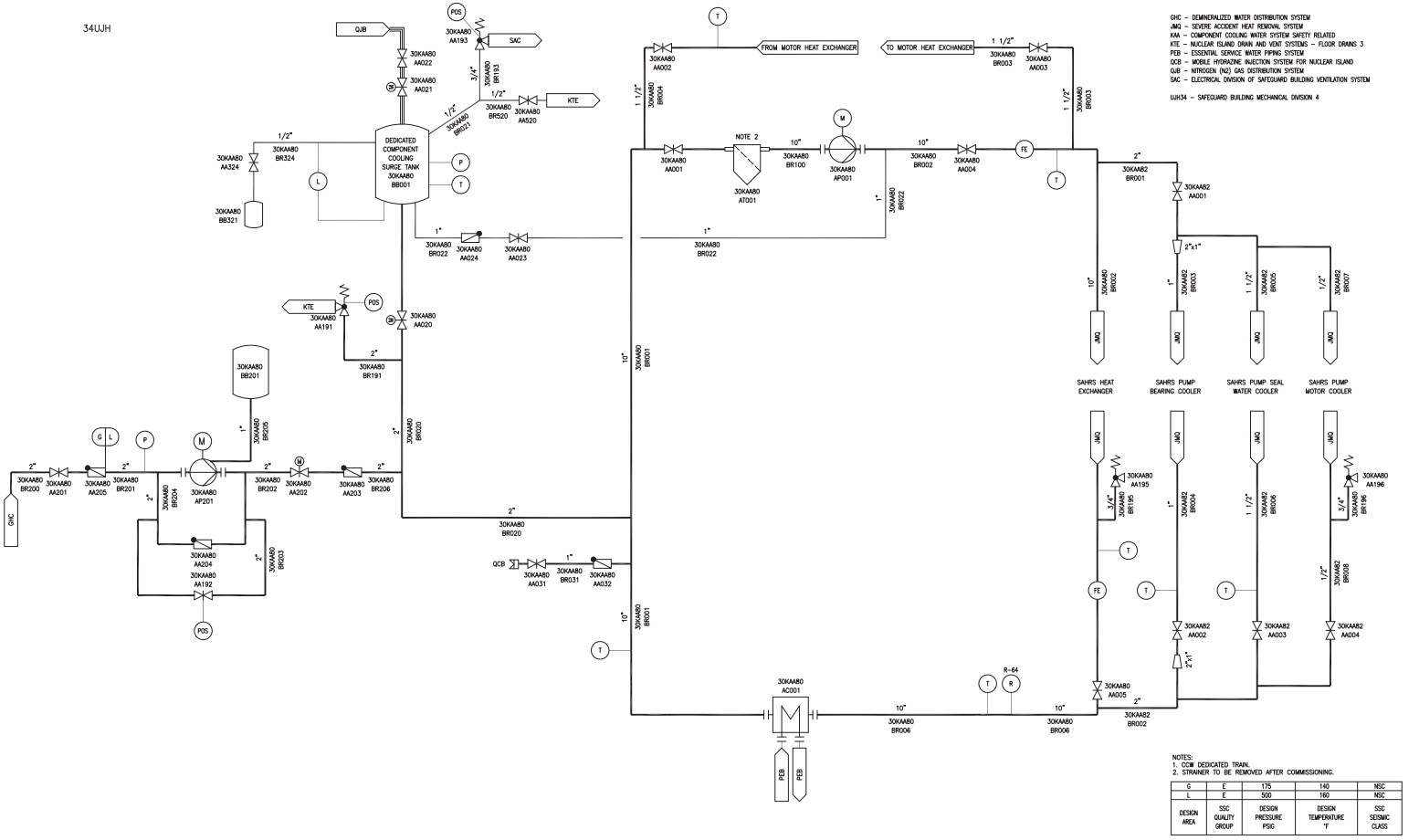

Next File

9.2.5 Ultimate Heat Sink

The function of the ultimate heat sink (UHS) is to dissipate heat rejected from the essential service water system (ESWS) during normal operations and post accident shutdown conditions. System interface heat loads are listed on Table 9.2.5-1. The UHS for the U.S. EPR is sized to provide adequate cooling capacity as required by RG 1.27.

Essential and dedicated ESWS components including some UHS valves and some UHS instrumentation are addressed in Section 9.2.1.

9.2.5.1 Design Basis

UHS structures, systems and components which provide cooling for safety-related equipment are designed to withstand the effects of natural phenomena such as earthquakes, tornadoes, hurricanes, floods, and external missiles without loss of capability to perform their safety-related functions (GDC 2). Structures housing the system as well as the system components are capable of withstanding the effects of earthquakes. The seismic design of this system meets the guidance of RG 1.29 (Position C.1 for the safety-related portion, and Position C.2 for the non-safety-related portion). Refer to Section 3.2 for quality group classifications.

The UHS is designed to accommodate the effects of, and to be compatible with, the environmental conditions associated with normal operation, maintenance, testing, and postulated accidents. These shall be appropriately protected against dynamic effects, including the effects of missiles, pipe whipping, and discharging fluids, that may result from equipment failures and from external events (GDC 4).

The UHS does not share structures, systems or components important to safety with other nuclear power plant units unless it has been shown that such sharing does not significantly impair the ability to perform their safety-related functions; including, the event of an accident in one unit, an orderly shutdown and cooldown of the remaining units (GDC 5).

The UHS functions to provide heat removal from the ESWS during normal operation and accident conditions, and transfers that energy to the environment (GDC 44).

The UHS is designed to permit appropriate periodic inspection of important components necessary to maintain the integrity and capability of the system (GDC 45).

The UHS is designed to permit operational functional testing of safety-related components to ensure system operability (GDC 46).

The UHS operates in conjunction with the ESWS and component cooling water system (CCWS) and other reactor auxiliary components to provide a means to cool the reactor core and reactor coolant system (RCS) to achieve a safe shutdown.

The UHS operates for a nominal 30 days following a loss of coolant accident (LOCA) without requiring any makeup water to the source or demonstrates that replenishment or use of an alternate or additional water supply can be effected to ensure continuous capability of the sink to perform its safety-related functions.

9.2.5.2 System Description

The UHS consists of four separate, redundant, safety-related divisions. Also included is one dedicated non-safety-related division which is located in division 4. Each safety-related UHS division consists of one mechanical draft cooling tower with two fans, spray nozzles, tower fill, wind drift eliminator, piping, valves, controls and instrumentation. Each safety-related division also includes a cooling tower basin intake structure with removable coarse and fine screens. The screens protect the ESWS pumps and the dedicated ESWS pump against debris. System design parameters are listed on Table 9.2.5-2. The system is shown in Figure 9.2.5-1—Ultimate Heat Sink Piping and Instrumentation Diagram. Parts of the blowdown system, emergency blowdown system and dedicated ESWS are shown in Figure 9.2.1-1.

A COL applicant that references the U.S. EPR design certification will provide site-specific information for the UHS support systems such as makeup water, blowdown and chemical treatment (to control biofouling).

A COL applicant that references the U.S. EPR design certification will compare site-specific chemistry data for normal and emergency makeup water to the parameters in Table 9.2.5-5. If the specific data for the site fall within the assumed design parameters in Table 9.2.5-5, then the U.S. EPR standard design is bounding for the site. For site-specific normal and emergency makeup water data or characteristics that are outside the bounds of the assumptions presented in Table 9.2.5-5, the COL applicant will provide an analysis to confirm that the U.S. EPR UHS cooling towers are capable of removing the design basis heat load for a minimum of 30 days without exceeding the maximum specified temperature limit of the ESWS and minimum required basin water level.

A COL applicant that references the U.S. EPR design certification will provide a description of materials that will be used for the UHS at their site location, including the basis for determining that the materials being used are appropriate for the site location and for the fluid properties that apply.

The UHS contains isolation valves at the cooling towers to isolate the safety related portions of the system from the non-safety-related basin support systems provided by

the COL applicant. The site-specific UHS systems are shown in Figure 9.2.5-2—[[Conceptual Site-Specific UHS Systems]].

9.2.5.3 Component Description

9.2.5.3.1 Mechanical Draft Cooling Towers

The cooling towers are rectangular mechanical-induced draft-type towers. Each tower consists of two cells in a back-to-back arrangement. The two cells of the cooling tower in a particular division share a single cooling tower basin and each cell is capable of transferring fifty percent of the design basis heat loads for one division from the ESWS to the environment under worst-case ambient conditions. The division four cooling tower shares use with the dedicated ESW train and can transfer severe accident (SA) heat loads to the environment under worst-case ambient conditions.

The Division 4 cooling tower fans can be supplied by a standby EDG or a station blackout diesel generator (SBODG) that is provided as an alternate AC power source.

The cooling tower fill design and arrangement maximize contact time between water droplets and air inside the tower. The tower fill spacing is chosen to minimize the buildup of biofilm and provide for ease of cleaning, maintenance, and inspection.

UHS cooling tower fill is constructed of ceramic tile, supported on reinforced concrete beams. Spray piping and nozzles are fabricated of corrosion resistant materials (e.g., stainless steel, bronze). UHS cooling tower internals are seismically designed and supported to withstand a safe shutdown earthquake (SSE). Passive failures of the cooling tower spray or fill systems are considered extremely unlikely due to their materials of construction, supporting systems and Seismic Category I design.

The UHS fans are designed to withstand the effects of tornado including differential pressure effects, overspeed, and the impact of differential pressure effects on other equipment located within the cooling tower structure (e.g., capability to function, potential to become missile/debris hazard). The method to be used to protect the UHS fans from overspeed due to tornado effects will be a brake system or the resistance of the fan gear reducer.

To prevent the entrainment of debris from the UHS cooling tower, each cell of the UHS cooling tower includes a debris screen located between the cooling tower internals and the ESW pump.

To account for potential recirculation and interference effects of the cooling towers, an inlet wet bulb correction factor is used. A COL applicant that references the U.S. EPR design certification will evaluate site-specific conditions to determine a wet bulb correction factor. With respect to interference effects site factors including orientation (with respect to wind direction), location, and wind velocity and direction

should be considered. With respect to recirculation effects, factors including the site layout should be considered. The site-specific wet bulb correction factor will be applied when evaluating the applicability of the UHS design parameters provided in Table 9.2.5-2. If the site-specific 0% exceedance maximum non-coincident wet bulb temperature exceeds the value provided in Table 9.2.5-2 when the site-specific wet bulb correction factor is applied, then a site-specific evaluation will be performed to demonstrate the acceptability of the UHS design for the site-specific conditions.

Depending on site layout and site meteorological conditions, the UHS cooling tower could have interference effects that would impact nearby safety-related air intakes. A COL applicant that references the U.S. EPR design certification will perform an evaluation of the interference effects of the UHS cooling tower on nearby safety-related air intakes. This evaluation will confirm that potential UHS cooling tower interference effects on the safety related air intakes does not result in air intake inlet conditions that exceed the U.S. EPR Site Design Parameters for Air Temperature as specified in Table 2.1-1.

~~To account for potential interference effects of the cooling towers, an inlet wet bulb correction factor is used. As part of addressing Item 2.0-1 of Table 1.8-2, the COL applicant that references the U.S. EPR design certification will evaluate their site-specific conditions of orientation (with respect to wind direction), location, wind velocity, and direction to determine a wet bulb correction factor to account for interference effects.~~

~~To account for potential recirculation effects of the cooling towers, an inlet wet bulb correction factor is used. As part of addressing Item 2.0-1 of Table 1.8-2, the COL applicant that references the U.S. EPR design certification will evaluate their site-specific location to determine a wet bulb correlation factor to account for recirculation effects.To account for potential interference effects from the UHS cooling tower, an evaluation of the effects on nearby safety-related air intakes will be performed by the COL applicant. As part of addressing Item 2.0-1 of Table 1.8-2, the COL applicant that references the U.S. EPR design certification will confirm that potential UHS cooling tower interference effects on the safety-related air intakes does not result in air intake inlet conditions that exceed the U.S. EPR Site Design Envelope air temperature parameters specified in Table 2.1-1.~~

Each cooling tower basin is sized to provide for a minimum 72-hour supply of cooling water to the associated ESW division under design basis accident (DBA) conditions assuming loss of normal makeup water capability. In the event of torrential rains and hurricanes, water would enter through the air inlet and air outlet area of the cooling tower portion of the Essential Service Water Buildings. Refer to Figure 3.8-95 through Figure 3.8-102 for details of the Essential Service Water Building. As the water level reaches the high level, an alarm in the control room will alert the operator. Operator action is performed to remove water from the cooling tower basin through the use of

the safety related emergency blowdown to maintain normal water level. Therefore, no adverse effects on the safety related equipment is anticipated within the ESW pump room if the water level rises due to torrential rains and hurricanes.

9.2.5.3.2 Piping, Valves, and Fittings

System materials are selected that are suitable to the site location, UHS fluid properties and site installation. System materials that come into contact with one another are chosen to minimize galvanic corrosion. All safety-related piping, valves, and fittings are in accordance with ASME Code Section III, Class 3 (Reference 1).

Pipe diameters for all branches of UHS piping are based on limiting the flow velocity to 10 ft/sec for normal modes of operation that are expected to occur frequently.

Inservice testing of valves will be performed as described in Section 3.9.6.3. Leakage rates for boundary isolation valves that require testing are based on ASME OM Code, Subsection ISTC (Reference 2).

UHS valve functions are addressed in Section 9.2.1.3.5.

9.2.5.3.3 Cooling Tower Basin

The 72-hour basin water volume is the minimum water volume that must be present in the basin to accommodate system water inventory losses experienced in that basin due to UHS Cooling tower operation during a Design Basis Accident. The required volume is determined based on water losses under worst case environmental conditions with the highest ESW heat load during a Design Basis Accident for a 72 hour period without incurring pump vortexting during operation. Inventory losses consist of evaporation losses, tower drift losses as well as valve seat leakage and seepage.

A margin of 6" was applied for the minimum pump submergence and a 10" margin for the 72-hour water volume. Drift loss from the UHS tower is 0.005 percent; however, a conservative 0.01 percent was used in the analysis. The valve leakage is calculated assuming all isolated valves leak simultaneously at a maintained rate of 0.5 D (inch) gpm. The 30 day seepage loss is 360,000 lbm and a 3-day seepage loss of 40,000 lbm was chosen for this analysis. This analysis also assumes that ESW pumps operate at design flow for the 72-hour duration. A water height of 21" is provided above the technical specification height required to account for the operating band and other instrument margins. Also 6" is provided for freeboard.

UHS Cooling tower blowdown is automatically secured during the initial 72 hour post-accident period through system instrumentation and control design features. As a result, the only significant system water inventory losses are due to evaporation, cooling tower drift, valve seat leakage, and seepage.

~~The 72-hour basin water volume is the minimum water volume that must be present in a basin to accommodate system water inventory losses experienced in the basin due to ultimate heat sink (UHS) tower operation under the worst case environmental conditions, and with the highest essential service water (ESW) heat load for a 72-hour period, without incurring pump damage during operation.~~

~~UHS tower blowdown is automatically secured during the initial 72-hour post-accident period through system instrumentation and control design features, so the only significant system water inventory losses are due to evaporation, tower drift, and valve seat leakage and seepage.~~

Meteorological conditions resulting in the maximum evaporative and drift loss of water for the UHS over a 72-hour period are presented in Table 9.2.5-3—Design Values for Maximum Evaporation and Drift Loss of Water from the UHS. A COL applicant that references the U.S. EPR design certification will confirm by analysis of the highest average site-specific wet bulb and dry bulb temperatures over a 72-hour period from a 30-year hourly regional climatological data set that the site-specific evaporative and drift losses for the UHS are bounded by the values presented in Table 9.2.5-3.

Meteorological conditions for the U.S. EPR that result in minimum cooling tower cooling that are the worst combination of controlling parameters (wet bulb and dry bulb), including diurnal variations for the first 24 hours of a DBA LOCA, are presented in Table 9.2.5-4 and do not result in a maximum ESWS supply temperature from the UHS basin exceeding 95°F. A COL applicant that references the U.S. EPR design certification will confirm that the maximum UHS cold-water return temperature of 95°F is met by an analysis that confirms that the worst combinationof site-specific wet bulb and dry bulb temperatures over a 24-hour period from a 30-year hourly regional climatological data set are bounded by the values presented in Table 9.2.5-4.

For site-specific meteorological conditions that are outside the bounds of the assumptions presented in Tables 9.2.5-3 and 9.2.5-4, the COL applicant will confirm by analysis that the U.S. EPR design acceptably meets any additional requirements that may be imposed by the more limiting site-specific meteorological conditions and that the design maintains conformance to the design commitments and acceptance criteria described in this FSAR.

Water makeup to the UHS cooling tower basin beyond 72 hours is site specific. A COL applicant that references the U.S. EPR design certification will confirm that the site-specific UHS makeup capacity is sufficient to meet the maximum evaporative and drift water loss after 72 hours through the remainder of the 30-day period consistent with RG 1.27.

9.2.5.3.4 Coarse and Fine Screens

Coarse and fine screens are provided in the ESWS cooling tower basin intake structure to protect the ESWS pumps and dedicated ESWS pump against debris. Both of these screens are safety related and extend across the full width of the pump bay opening and above the maximum water level to provide full control of the debris across the flow cross-section. The screens are removable for manual maintenance and cleaning. The coarse screen mesh is sized (2" x 2") to prevent large debris from entering the pump intake structure, and the fine screen mesh is sized (0.5" x 0.5") to allow the debris with sizes acceptable for pump operation to pass the screen. Differential water-level setpoints across the coarse and fine screens are provided and continuously monitored. Inspection and maintenance at pre-set intervals are carried out. An inspection and cleaning of the screens is initiated anytime the water-level differential reaches alarm-level setpoint.

The collected debris must be treated in accordance with federal and state regulations relevant to the site location.

9.2.5.4 System Operation

The safety related ESWS pumps cooling water from the cooling tower basin to supply ESWS loads and back to the mechanical draft cooling tower. The four safety-related divisions of the UHS are powered by Class 1E electrical buses and are emergency powered by the emergency diesel generators (EDG).

The nominal HP of each UHS fan is 250 as indicated in Table 8.3-4 through Table 8.3-7. The ESWS flowrate into the UHS cooling tower is indicated in Table 9.2.5-2. The ESWS flowrate out of the UHS cooling tower basin is indicated as the “normal flowrate of each ESW pump” in Table 9.2.1-1.

The non-safety-related dedicated ESWS pumps cooling water from the division four cooling tower basin to the dedicated system heat load and back to the division four mechanical draft cooling tower during SA and beyond DBAs.

The cooling tower fans are driven with multi-speed drives that are capable of fan operation in the reverse direction. Consistent with vendor recommendations, the fan may be operated in the reverse direction for short periods to minimize ice buildup at the air inlets. To prevent or eliminate ice buildup within the cooling tower fill during low load/low temperature operation, multiple methods are utilized. Operation of a cooling tower fan in the reverse direction is the last option used if all other airside control methods fail to remove ice buildup. When a cooling tower fan is operated in the reverse direction to eliminate ice build-up, the system (associated train) is considered operable. Upon receipt of a safety injection (SI) signal, any fan(s) operating in the reverse direction will automatically trip and re-start following coast-down, and accelerate to full speed in the forward direction to dissipate the maximum heat to the

environment. Similarly, upon receipt of an SI signal, cooling tower fans in the standby train(s) will automatically start and accelerate to full speed, and the cooling tower fans in the operating train(s) will continue to operate at full speed. If the fans in the operating train(s) are operating at reduced speed at the onset of a DBA, they will be automatically switched to full speed upon receipt of an SI signal, to dissipate the maximum heat to the environment. All of these actions are automatic following the receipt of an SI signal and do not require operator action.

Cooling tower fan start time, as well as the time required for fan coast-down, re-start and acceleration to full speed of a fan(s) operating in reverse, have no impact on the ability of the UHS cooling towers to mitigate the consequences of a DBA. Fans start automatically and accelerate to full speed in response to an SI signal. With respect to cooling tower fan start time, it is noted that the peak heat load on the ESWS occurs hours after the start of the DBA, and thus, hours after the fans have started and accelerated to full speed in response to an SI signal. In the case of cooling tower fans operated in reverse to eliminate ice from the fill, this operating mode is utilized only for brief periods of time (e.g., minutes) during cold weather, when the ESWS temperature is well below the design cold water temperature, and, consequently capable of accommodating the initial heat load. The time to change from reverse fan operation to full speed forward is less than five minutes.~~Cooling tower fans operating in the reverse direction during normal operation are considered operable at the onset of a design basis accident (DBA). Upon receipt of a safety injection (SI) signal, any fans operating in the reverse direction are secured and brought to a complete stop before re-energizing to operate at full speed in the forward direction. Upon receipt of an SI signal, fans in the operating and standby trains are automatically set to full fan speed to dissipate the maximum heat load to the environment.~~

The cooling tower bypass piping provides a means for diverting ESW return flow directly to the tower basin under low load/low ambient temperature conditions to maintain ESW cold water temperature within established limits and to protect against freezing. The bypass has the capability of diverting the full flow to the basin by paired operation of the bypass valve and return header valve.

Pumps, piping, valves, and other components essential to the operation of the UHS are located within the boundary of the ESWPB, except the short section of emergency blowdown pipe exiting the building that is protected by the building structure. As stated in U.S. EPR FSAR Tier 2, Section 9.4.11, the ESWPB ventilation system maintains a minimum temperature. Moreover, the ESWS riser is located within the ESWPB and then branches off laterally to the spray nozzle header. The first of the self-draining spray nozzles are attached to the header immediately after the header exits the ESWPB. As needed, any other piping and components subject to freezing conditions are provided with freeze protection design features, such as heat tracing.

Based on the increase in heat removal during a DBA, a temperature of less than or equal to 90°F is maintained in the UHS basin during normal operation, so that the cooling tower basin temperature does not exceed 95°F. 95 °F is the maximum design basis UHS basin temperature for the duration of a DBA. The normal UHS basin temperature of less than or equal to 90 °F and DBA UHS basin temperature of less than or equal to 95 °F are the bases for ESWS temperatures listed in FSAR Table 9.2.5-1. A value of 92 °F normal ESWS temperature is used for sizing the CCWS heat exchanger.

9.2.5.5 Safety Evaluation

The UHS pump buildings and cooling towers are designed to withstand the effects of earthquakes, tornadoes, hurricanes, floods, external missiles and other natural phenomena. Section 3.3, Section 3.4, Section 3.5, Section 3.7 and Section 3.8 provide the basis for the adequacy of the structural design of these structures. The aboveground piping and components are protected by the structures.

The UHS is designed to remain functional after a safe shutdown earthquake (SSE). Section 3.7 and Section 3.9 provide the design loading conditions that are considered. Section 3.5, Section 3.6 and Section 9.5.1 provide the hazards analyses to verify that a safe shutdown, as outlined in Section 7.4, can be achieved and maintained.

The four division design of the UHS provides complete redundancy; therefore a single failure will not compromise the UHS system safety-related functions. Each division of UHS is independent of any other division and does not share components with other divisions or with other nuclear power plant units.

Considering preventative maintenance and a single failure, two UHS divisions may be lost, but the ability to achieve the safe shutdown state under DBA conditions can be reached by the remaining two UHS divisions. In case of LOOP the four UHS cooling towers have power supplied by their respective division EDGs. Isolation valves can isolate non-safety-related portions of the system if necessary without compromising the safety-related function of the system.

The cooling towers must operate for a nominal 30 days following a LOCA without requiring any makeup water to the source or it must be demonstrated that replenishment or use of an alternate or additional water supply can provide continuous capability of the heat sink to perform its safety-related functions. The tower basin contains a minimum 72-hour supply of water. After the initial 72 hours, the site-specific emergency makeup water system will provide sufficient flow rates of makeup water to compensate for system volume losses for the remaining 27 days. The normal blowdown isolation valves and the normal filter blowdown isolation valves provide automatic isolation of the ESWS from downstream non-safety-related blowdown piping under DBA conditions to prevent loss of ESW inventory. The emergency blowdown isolation valves and the emergency filter blowdown isolation

valves provide automatic isolation of the ESWS under DBA conditions to prevent loss of ESW inventory. The emergency blowdown discharges outside of the Essential Service Water Pump Building (ESWPB) at an elevation above the flood level. The emergency blowdown pipe exiting the building is protected from tornado generated missiles by the building structure. ~~The normal and emergency blowdown isolation valves provide automatic isolation of the ESWS from downstream non-safety-related blowdown piping under DBA conditions to prevent loss of ESW inventory.~~ The ESW emergency makeup water system also provides isolation of the normal makeup water system from the tower basins under DBA conditions to prevent loss of ESW inventory.

The heat load after 72 hours post-DBA is lower than the peak heat load due to a reduction in the decay heat from the reactor. Consequently, the makeup flow rate required after 72 hours is lower than the peak condition. Since the UHS basin contains at least 72 hours of water inventory for the DBA, in combination with the worst ambient evaporation conditions, the UHS emergency makeup is not required to start until after 72 hours. At that point, the makeup requirements are diminished. The minimum makeup supply rate is based on the maximum evaporation rate ~~over a~~at the end of the 72 hour period post-DBA and considers such losses as drift, seepage and valve seat leakage.

During the 27 days following the 72-hour post-accident period the UHS cooling towers are capable of removing the design basis heat load without exceeding the maximum specified temperature limit for ESWS with minimum specified water inventory available and the most limiting site-specific ambient conditions that are assumed for heat removal. Analyses will demonstrate that the cooling towers are capable of removing the.design basis heat load without exceeding the maximum specified temperature limit for ESWS. Transient analyses shall be completed by qualified individuals and the results will be documented in the Cooling Tower Design Report. This report shall include:

1. Performance curves for the cooling towers.

2. The period of record for the temperature data and the specific worst case periods used in the analysis, together with selection methods and validation techniques for the meteorological data.

3. A trend of water temperature in the cooling tower for the 30-day period.

4. The effect of concentrated impurities in the cooling tower basin on the ESWS flow rate and the cooling tower performance.

The report shall also include limiting assumptions and inputs, analytical methods, uncertainty analyses that demonstrate conservative results, and a list of references. Qualifications of the individuals performing the analysis and independent verification will also be included.

During the 27 days following the 72-hour post-accident period the UHS cooling towers are capable of removing the design basis heat load without water level dropping below the minimum required level in the cooling tower with minimum specified water inventory available and the most limiting site-specific ambient conditions that are assumed for water usage. Analyses will demonstrate that the cooling towers are capable of removing the design basis heat load without the water inventory dropping below the minimum required level in the cooling tower. Transient analyses shall be completed by qualified individuals and the results will be documented in the Cooling Tower Design Report. The report shall include:

1. Performance curves for the cooling towers.
2. The period ofrecord for the temperature data and the specific worst case periods used in the analysis together with selection methods and validation techniques for the meteorological data,
3. A trend of water temperature and water level in the cooling tower for the 30-day period.
4. The effect of concentrated impurities in the cooling tower basin on the ESWS flow rate and the cooling tower performance.

The report shall also include limiting assumptions and inputs, analytical methods, uncertainty analyses that demonstrate conservative results, and a list of references. Qualifications of the individuals performing the analysis and independent verification will also be included.

As noted in Section 9.2.5.3, COL applicants that reference the U.S. EPR will verify that the makeup water supply is sufficient for the ambient conditions corresponding to their plant location. ~~Refer to Table 1.8-2, Item number 2.3-10.~~ In accordance with Section 3.4.3.9, ESWPBs are physically separated by division and connected to their respective ESW cooling tower. The flooding analysis considers a postulated pipe failure in the ESWS piping to be the bounding internal flooding source. In the event of an ESWS piping failure in the building, the affected division of the ESWS is considered lost. As indicated in Section 3.4.1, if there is a failure of one division of ESWS and one division is out for maintenance, there are two remaining divisions of ESWS to perform the system safety function.

9.2.5.6 Inspection and Testing Requirements

Prior to initial plant startup, a comprehensive preoperational test is performed to demonstrate the ability of the ESWS and UHS to supply cooling water as designed under normal and emergency conditions. The UHS is tested as described in Chapter 14.2, Test # 49.

The installation and design of the UHS provides accessibility, as described in U.S. EPR FSAR Tier 2, Section 6.6.2, for the performance of periodic ~~inservice~~ inspection and testing, including inservice inspection. Periodic inspection and testing of safety-related equipment verifies its structural and leaktight integrity and its availability and ability to fulfill its functions. Inservice inspection and testing requirements are in accordance with Section XI of the ASME BPV Code and the ASME OM Code.

Section 3.9 and Section 6.6 outline the inservice testing and inspection requirements. Refer to Section 16.0, Surveillance Requirements (SR) 3.7.19 for surveillance requirements that verify continued operability of the UHS.

Design considerations for the safety-related portions of the UHS and provisions for monitoring of UHS heat rejection capability to confirm adequate performance over time will be as indicated in Section 9.2.1.6 concerning GL-89-13. The inspections will include periodic inspections of the UHS cooling tower basins to identify macroscopic biological fouling organisms, such as blue mussels, American oysters and Asiatic clams, sediment and corrosion, biocide treatment of the system, flushing and flow testing of redundant and infrequently used cooling loops and equipment, and periodic sampling to identify the presence of Asiatic clams. Chemical treatment with the appropriate biocide(s) will be performed in response to positive biological fouling test results, and the frequency of treatment will be adjusted as appropriate. Biocide treatment will be in accordance with applicable Federal, State and local environmental regulations.

9.2.5.7 Instrumentation Applications

Instrumentation is provided in order to control, monitor and maintain the safety-related functions of the UHS. Indications of the process variables measured by the instrumentation are provided to the operator in the main control room.

UHS fan status and controls, including fan speed selection (low speed, high speed, etc.) and forward or reverse direction, are provided to the control room operator.

UHS valve positions are addressed in Section 9.2.1.7.

UHS basin level sensors and temperature sensors are shown on Figure 9.2.1-1, Sheet 1.

UHS basin level alarm summary is addressed in Table 9.2.1-3.

9.2.5.7.1 System Monitoring

- Cooling tower basin water level.
- Cooling tower water temperature.
- Cooling tower basin intake structure differential water level across screens.

9.2.5.7.2 System Alarms

- Cooling tower water temperature low.
- Cooling tower basin water level low.
- Cooling tower basin water level high.
- Cooling tower basin intake structure differential water level across screens high.

9.2.5.8 References

1. ASME Boiler and Pressure Vessel Code, Section III: "Rules for Construction of Nuclear Facility Components," Class 3 Components, The American Society of Mechanical Engineers, 2004.
2. ASME OM Code, "Code for Operation and Maintenance of Nuclear Power Plants," Subsection ISTC, The American Society of Mechanical Engineers, 2004 edition.

Table 9.2.5-1—Ultimate Heat Sink System Interface

Component	Max Heat Load MBTU/hr	Total Required ESW Flow (10^6 lb_m/hr)	Required ESW Temperature °F	Comments
CCWS heat exchanger	128.1	7.540 min	≤92~~°F~~	Normal Operation
	120.1	7.540 min	≤90~~°F~~	Spring/Fall Outage Cooldown
	~~291.3~~293.35[1]	7.540 min	≤95~~°F~~	DBA
Dedicated CCWS heat exchanger	~~48.64~~51.2 nominal)	~~1.205~~1.102 min	≤95~~°F~~	Severe Accident
EDG heat exchangers	22.0[2]	~~1.06~~0.8985[3] min	≤95~~°F~~	EDG Operation
ESW pump room cooler for 31/32/ 33/34 UQB	0.619	0.0685	≤ 95~~°F~~	Normal Operations Shutdown/ Cooldown and DBA
ESW pump room cooler for 34 UQB	0.314	0.0347	≤ 95~~°F~~	Severe Accident - ESW flow supplied by dedicated ESW pump
ESW pump PEB 10/20/30/40 AP001	2.80	N/A	N/A	Normal Operations/ Cooldown/and DBA
UHS	318.77	N/A	N/A	Total from the CCWS and EDG heat exchangers, the ESWPBVS room cooler, and the ESW pump mechanical work.

Notes:

1. The CCWS heat exchanger load on the UHS in DBA is equal to the LHSI DBA heat load of 241 x 106 Btu/hr in Table 9.2.2-2 plus the additional loads from the CCWS common users.

2. Heat load includes all three associated heat exchangers (intercooler loop HX, lube oil cooler, and jacket water loop HX).

3. Heat exchangers are in series.

Table 9.2.5-2—Ultimate Heat Sink Design Parameters

Cooling Tower Cells 31/32/33/34 URB	
Description	**Technical Data**
Cooling Tower Type	Mechanical Induced Draft
Design Water Flow (total both cells)	19,200 gpm
Design Hot (Inlet) Water Temperature	135°F
Design Cold (Outlet) Water Temperature	≤95°F (max, DBA)
Winter Design Cold (Outlet) Water Temperature @ 50°F Inlet WB	71°F Normal Ops/72°F Cooldown 78.5°F DBA
Design Inlet Wet Bulb Temperature	81°F (non-coincident, 0% exceedance value)(1)(2)
Maximum Drift Loss (Percent of Water Flow)	< 0.005%
Maximum Evaporation Loss at Design Conditions (total both cells)	571 gpm
Number of Cells	2 Cell/Tower
Basin Water Volume (Min)	≥295,120 ft^3
Basin Water Level (Min)	23.75 ft
Required Cooling Tower Emergency Makeup Flow, ~~72 hours,~~ post-DBA (72 hours through 30 days)	≥300 gpm

Note:

1. COL applicant to determine wet bulb temperature correction factor to account for potential interference and recirculation effects. (Refer to COL Item ~~2.0-1 in Table 1.8-2~~).

2. An important meteorological design point for the establishment of the cooling tower performance for the U.S. EPR DBA maximum load case and consequently establishes all subsequent cooling tower performance for other wet bulb conditions and lower loads.

Table 9.2.5-3—Design Values for Maximum Evaporation and Drift Loss of Water from the UHS[1]

Time (hr)	Wet Bulb Temp (°F)	Dry Bulb Temp (°F)	Time (hr)	Wet Bulb Temp (°F)	Dry Bulb Temp (°F)	Time (hr)	Wet Bulb Temp (°F)	Dry Bulb Temp (°F)
1	69.87	84	25	70.49	86	49	74.14	91
2	68.69	82	26	71.03	86	50	72.99	87
3	66.82	78	27	71.03	86	51	70.96	84
4	67.02	77	28	71.03	86	52	69.33	84
5	69.04	78	29	71.03	86	53	68.90	81
6	68.48	78	30	70.02	81	54	69.46	81
7	68.14	77	31	68.24	79	55	69.13	80
8	67.10	74	32	68.25	79	56	69.69	80
9	67.10	74	33	68.13	77	57	67.70	79
10	67.80	76	34	68.13	77	58	67.70	79
11	67.23	76	35	69.70	80	59	68.58	80
12	69.79	82	36	71.79	83	60	71.53	84
13	70.98	84	37	72.98	85	61	72.40	85
14	72.71	86	38	75.02	88	62	73	87
15	74.15	89	39	76.71	92	63	73.29	88
16	74.71	93	40	77.49	95	64	73.58	89
17	74.98	94	41	78.24	98	65	73.58	89
18	75.82	93	42	78.72	100	66	73.33	92
19	74.98	98	43	78.48	99	67	73.08	93
20	74.20	97	44	77.91	99	68	73.36	94
21	74.19	97	45	77.91	99	69	74.42	94
22	74.16	95	46	77.10	98	70	74.14	93
23	74.15	93	47	76.85	97	71	74.68	93
24	72.22	90	48	75.24	93	72	73.28	88

Note:

1. Only 72 hours of temperature data are provided because the site specific makeup water system will provide sufficient flow rates of makeup water to compensate for system volume losses for the remaining 27 days of the required 30-day period.

Table 9.2.5-4—Design Values for Minimum Water Cooling in the UHS

Time (hr)	Wet Bulb Temp (°F)	Dry Bulb Temp (°F)
1	75.8	82
2	76.1	83
3	76.1	83
4	77.3	85
5	79.7	89
6	80.8	91
7	82.0	93
8	84.6	99
9	85.3	99
10	85.3	99
11	84.2	100
12	84.2	100
13	84.6	99
14	83.9	99
15	83.9	99
16	82.6	96
17	82.6	93
18	82.1	91
19	82.1	91
20	81.9	90
21	80.7	88
22	80.7	88
23	79.5	86
24	79.5	86

Table 9.2.5-5—Ultimate Heat Sink - Initial Chemistry to be Maintained at the Start of a DBA

Constituent	Limits	
	Without Scale Inhibitors	With Scale Inhibitors
pH (pH units)	6.8-7.2	7.8-8.4
Total Alkalinity (mg/l as CaCO3	30-50	200-250
Calcium Sulfate (mg/l of Ca as CaCO3	Maintain Ca <900	Maitain Ca <900
Silica (mg/l as SiO2)	<150	<150
Magnesium Silicate (mg/l of Mg as CaCO3 and mg/l of silica as SiO2	Mg x SiO2 <35,000	Mg x SiO2 <75,000
Suspended Solids (mg/l)	<150	<150
Total Dissolved Solids (mg/l)	<5,000(1)	<5,000(1)
Calcium Phosphate (mg/l as PO4)	<5 orthophosphate	As required on an individual basis per supplier's recommendation
Scale Inhibitor (mg/l)	Zero	As required on an individual basis per supplier's recommendation

Notes:

1. The UHS design is based on normal makeup supply <500 mg/l TDS to allow 10 cycles of concentration with TDS <5,000 at the start of the DBA.

Figure 9.2.5-1—Ultimate Heat Sink Piping and Instrumentation Diagram

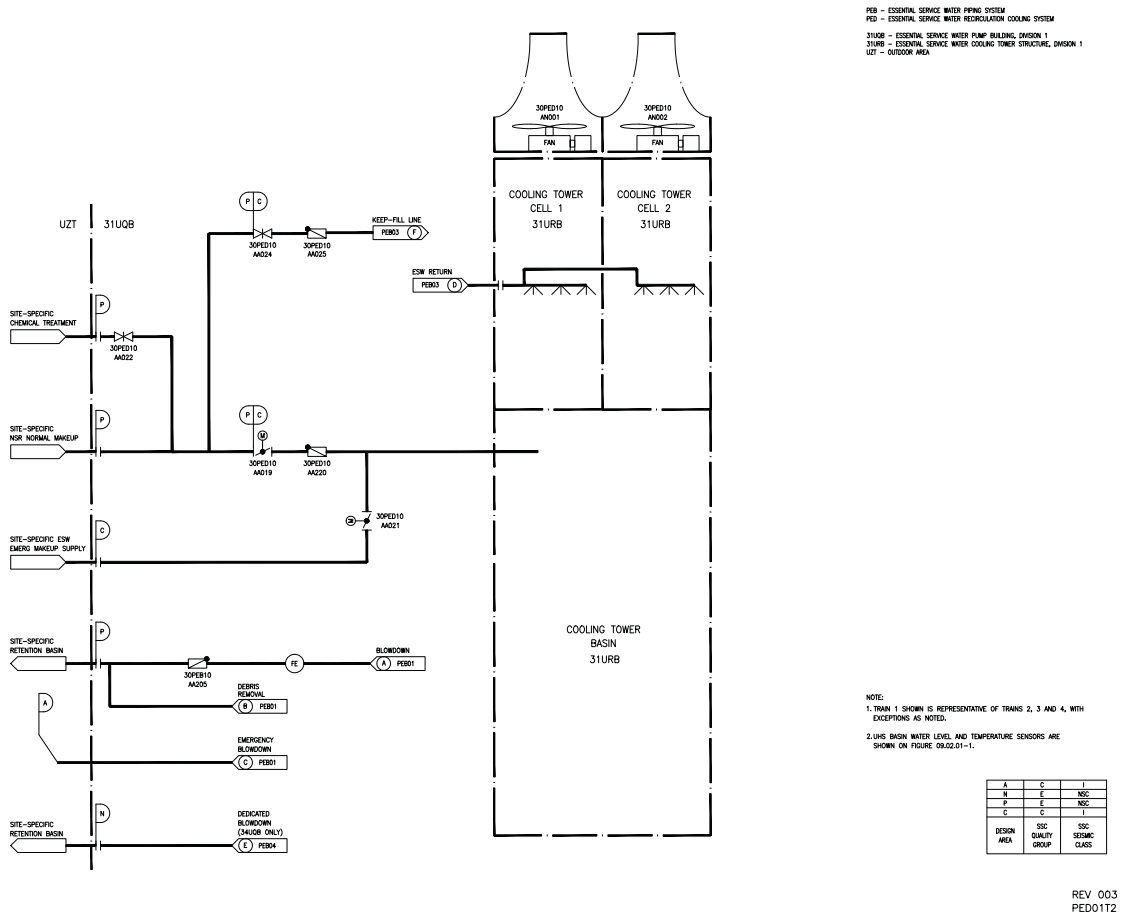

Figure 9.2.5-2—[[Conceptual Site-Specific UHS Systems]]

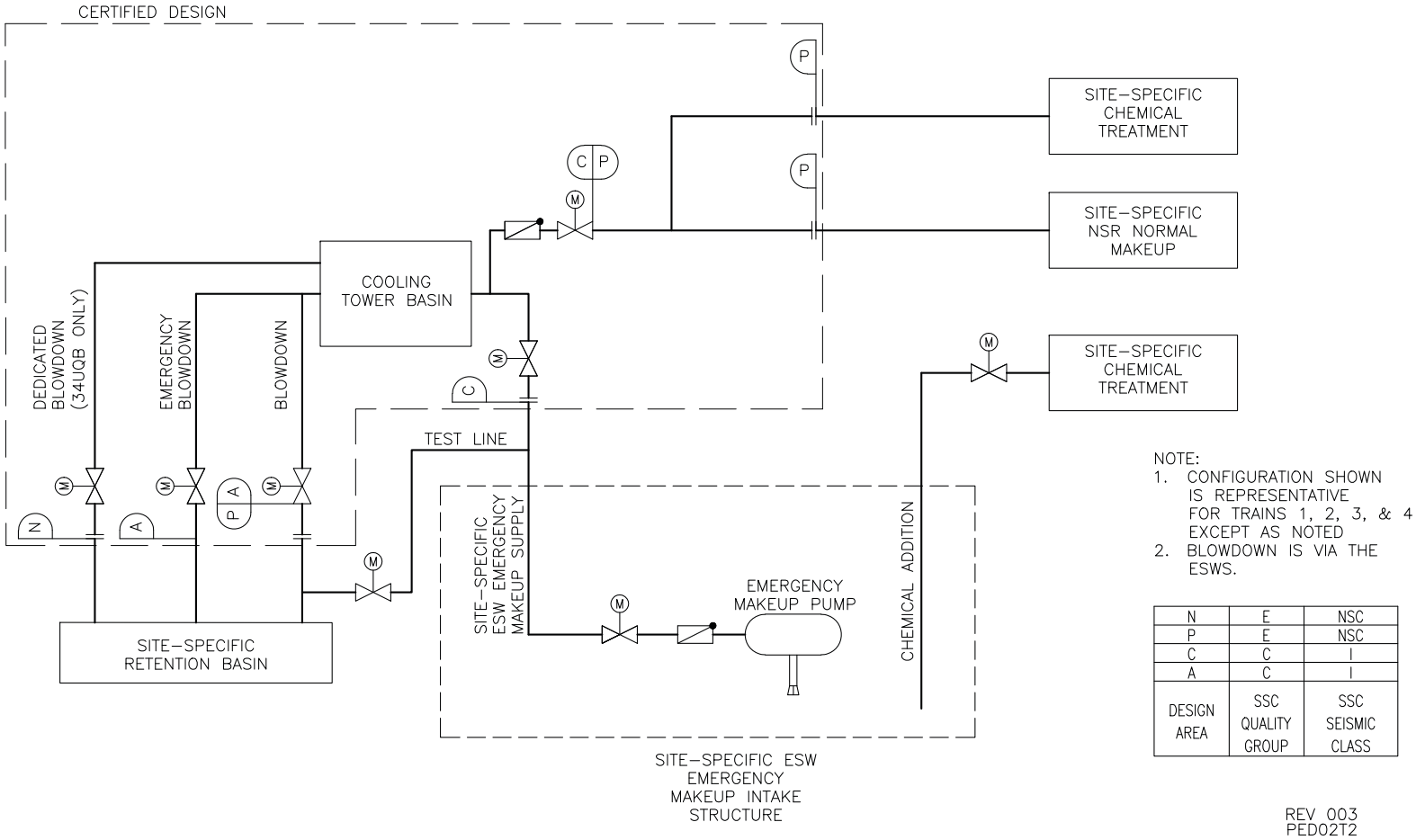

Next File

Figure 9.2.5-3—Cross-Section of UHS Tower Basin

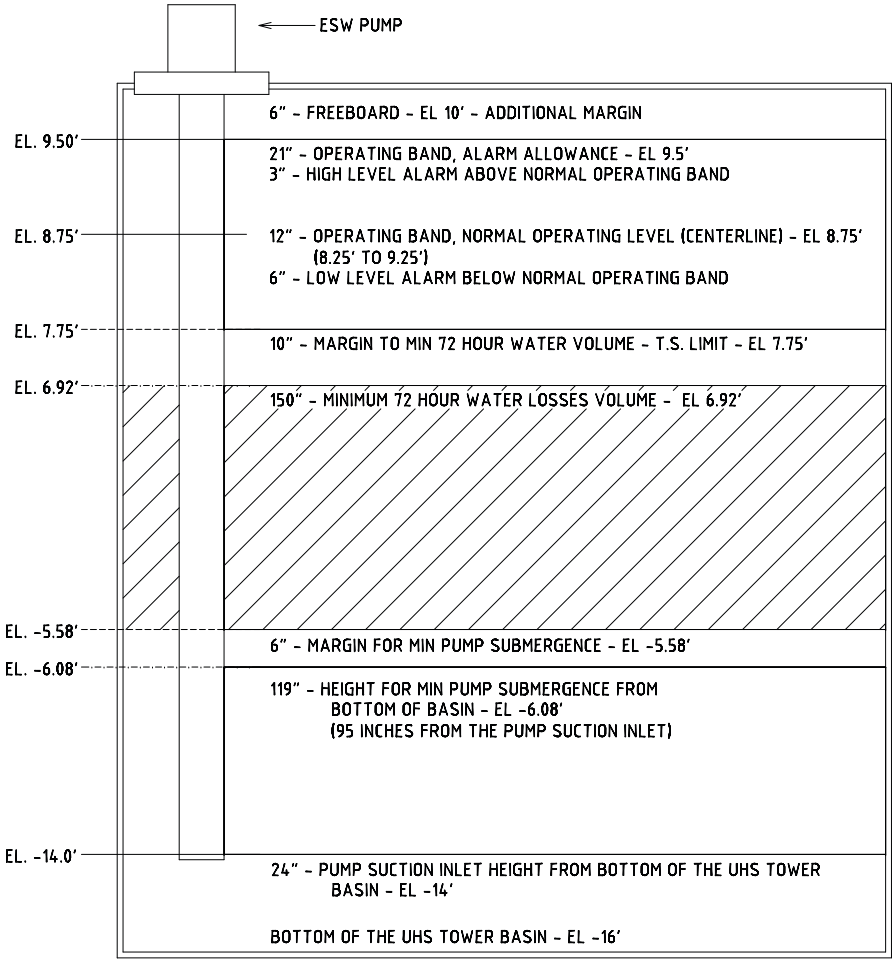

NOTE:
FIGURE NOT DRAWN TO SCALE

PED03T2

9.2.7 Seal Water Supply System

The seal water supply system (SEWSS) supplies seal water to equipment and components in systems carrying radioactive fluids to prevent the escape of radioactive fluids from the shaft seals of pumps and agitators. The SEWSS also feeds the sealing liquid tanks of the gaseous waste processing system and the piping of the operational chilled water system.

The SEWSS system consists of two pumps, two buffer tanks and its associated valves and piping.

9.2.7.1 Design Bases

The SEWSS performs no safety-related functions and is classified non-safety related and non-seismic. Refer to Section 3.2 for details of the seismic and system quality group classification of the SEWSS.

9.2.7.2 System Description

9.2.7.2.1 General Description

The SEWSS flow diagram is provided in Figure 9.2.7-1—Seal Water Supply System.

The demineralized water stored in the outdoor demineralized water storage tanks supplies makeup to the SEWSS. Two 100 percent capacity seal water pumps are located in the Switchgear Building (SWGB) near the demineralized water storage tanks. The pumps are installed in parallel. Both pumps are capable of taking suction from either demineralized water storage tank. A check valve, installed in the discharge line of each pump, prevents back flow through the non-operating pump. During low seal water flow demand, a recirculation line back to the demineralized water storage tanks allows the minimum flow requirements of the pumps to be met.

The discharge lines of the pumps combine into a common header which distributes the seal water to the various consumers in the Nuclear Auxiliary Building (NAB), Radioactive Waste Processing Building (RWB), SB 4, and FB via piping, isolation valves, check valves, and buffer tanks.

The buffer tanks, located in SB 4 and the FB, are supplied from the demineralized water storage tanks by the seal water pumps through solenoid valves that are controlled based on water level in the tanks.

The seal water piping in the RWB operates at a reduced pressure that is provided by a pressure reducing valve. To protect the downstream lower pressure piping in the event of a reducing valve failure, a safety relief valve is provided.

The seal water system consumers can be isolated from the seal water supply by a motor-operated isolation valve located in the NAB.

The SEWSS provides a reliable supply of seal water to pumps in radioactive fluid carrying systems and feeds the gaseous waste processing system liquid tanks. The SEWSS supplies the plant consumers requiring seal water from the following systems:

- Severe accident heat removal system.
- Chemical and volume control system (CVCS).
- Coolant purification system.
- Coolant treatment system.
- Radioactive concentrates processing system.
- Liquid waste processing system.
- Liquid waste storage system.
- Operational chilled water system (OCWS) for gaseous waste processing system.

Refer to Section 12.3.6.5.8 for seal water supply system design features which demonstrate compliance with the requirements of 10 CFR 20.1406.

9.2.7.2.2 Component Description

Seal Water Pumps

There are 2 x 100 percent seal water pumps designed to operate during normal plant operation and during outages. Normally, one pump is running continuously at minimum flow, with the excess discharge flow returned to the demineralized water tank. The second pump is in standby. The SEWSS pump is continuously running to fill the buffer tanks during normal plant operation and outages. During a loss of offsite power (LOOP), the buffer tanks are not supplied by the seal water pump.

Buffer Tanks

The buffer tanks provide a stored volume of seal water to the chemical and volume control system pump seals during normal plant operation and LOOP conditions, and to the severe accident heat removal system in the event of a severe accident. Each buffer tank has a nitrogen gas cushion of sufficient pressure to provide the required seal pressure for any seal water level in the tank. Each buffer tank is protected from excessive nitrogen pressure by a safety valve in the nitrogen supply line. The SEWSS supply solenoid valves fail in the closed position on loss of power. A pressure relief valve is provided for each buffer tank.

Buffer Tank Isolation Valves

Isolation valve (30GHW45 AA005) downstream of the solenoid-operated isolation valve is normally open. However, this valve can be closed to isolate the buffer tank for maintenance or in the event of tank failure.

A valve is not provided downstream of the solenoid-operated isolation valve (30GHW44 AA002) because the severe accident heat removal (JMQ) pump seal is only supplied by seal water from the buffer tank during severe accidents.

Seal Water Check Valves

Check valves are installed on the upstream piping of each SEWSS user. These check valves automatically close on reverse flow to mitigate potential radiation cross contamination with other users and process piping during a loss of supply pressure. The check valves are installed as close as possible to the user to minimize the amount of piping that can be contaminated during reverse flow.

9.2.7.3 System Operation

9.2.7.3.1 Normal Operation

During normal operation, one seal water pump is continuously operating to deliver seal water at the required pressure to the seal water consumers. The second pump is on standby. The minimum recirculation flow required for the operating pump is returned to the demineralized water storage tanks via the pump minimum flow line. Normal pump flow and minimum recirculation flow are listed in Table 9.2.7-1—Seal Water Supply System Parameters.

The SEWSS average consumption flow is listed in Table 9.2.7-1.

The isolation valves in the suction, discharge, and minimum flow lines are positioned fully open; the suction and minimum flow isolation valves are locked fully open. The isolation valves for the buffer tank users are normally open. The valves upstream of the solenoid valves are adjusted and locked in the open position. The solenoid valves that supply makeup to the buffer tanks are in automatic operation, controlled by their respective buffer tank level. The pressure reducing valve in the RWB maintains proper pressure in the downstream piping to the consumers.

The normal source of seal water to the CVCS charging pumps is the Fuel Building buffer tank during plant operation and loss of offsite power (LOOP) conditions.

In the event of a failure of the operating pump, the standby pump automatically starts to provide proper pressure and flows to the seal water consumers. If maintenance of the operating pump is required, the standby pump can be manually started from the

main control room and the pump requiring maintenance can be removed from service, isolated and repaired.

9.2.7.3.2 Abnormal Operation

In the event of an LOOP, the seal water pumps are not available because the pumps are not provided with emergency or backup power, and the operational consumers are switched off because of low seal water supply header pressure. The CVCS pumps are supplied by the buffer tank during a LOOP condition. The CVCS pump and severe accident pump trip due to low seal water pressure because of low inventory in the buffer supply tanks. The FB buffer tank isolation valves are normally open. During LOOP, supplying seal water makeup to the buffer tanks and sealing liquid tanks is not possible because the seal water pumps are not available. Seal water to the gaseous waste processing system liquid tanks during abnormal operation is not required because of sufficient water inventory in these tanks.

9.2.7.4 Safety Evaluation

The operation of the SEWSS is not required for the safe shutdown of the plant or for mitigating the consequences of a design basis accident; therefore, the SEWSS has no safety-related function and does not require a nuclear safety evaluation.

9.2.7.5 Inspection and Testing Requirements

Refer to Section 14.2, Test #045, for initial plant testing of the SEWSS.

Periodic testing includes pressure testing of the buffer tanks and testing of the safety valve. The safety valve and buffer tanks will be tested in accordance with ASME B31.1 (Reference 1) and ASME Boiler and Pressure Vessel Code, Section VIII, Division 1 (Reference 2).

9.2.7.6 Instrumentation Requirements

All instrumentation and control functions are performed by the process automation system (PAS). The SEWSS is controlled from the main control room. Interlocks for the system and components provide safe and reliable operation.

The seal water pumps are equipped with controls that provide automatic changeover from the operating pump to the standby pump in case of pump failure. When the entire system has been filled and vented, one seal water pump receives a START signal to deliver seal water flow at the required pressure. The second pump remains on STANDBY and receives an automatic changeover START signal when the first pump fails to operate. In the event of low level in the demineralized water storage tanks, the pumps receive an “off” command from the PAS to maintain sufficient pump NPSH.

The seal water supply solenoid valves open and close on low and high water level, respectively, in their associated buffer tank as measured by the tank level instrumentation. The buffer tank solenoid supply valves receive an "off" command on low seal water pump discharge pressure. Seal water users in the Radioactive Waste Processing Building receive an "off" command on low seal water header pressure.

Pressure gauges are installed in the pump suction and discharge lines, discharge header, each buffer tank, and upstream and downstream of each pressure reducing valve to provide pressure indication.

A warning is provided for a "not closed" safety valve position.

Buffer tank level indication and solenoid "on/off" indication is provided.

9.2.7.7 References

1. ANSI/ASME B31.1-2004, "Power Piping," The American Society of Mechanical Engineers, 2004.

2. ASME Boiler and Pressure Vessel Code, Section VIII, Division 1: "Rules for Construction of Pressure Vessels," The American Society of Mechanical Engineers, 2004.

Table 9.2.7-1—Seal Water Supply System Parameters

Description	Technical Data
Seal Water Pumps 30GHW11/12 AP001 Normal flow rate	2.43 E+04 lb_m/hr
Seal Water Pumps 30GHW11/12 AP001 Minimum recirculation flow rate	2.21 E+04 lb_m/hr
Seal Water System Design Pressure	235 psig
Seal Water System Design Temperature	140°F
Seal Water Average Consumption Flow	28.7 lb_m/hr

Next File

Figure 9.2.7-1—Seal Water Supply System
Sheet 1 of 3

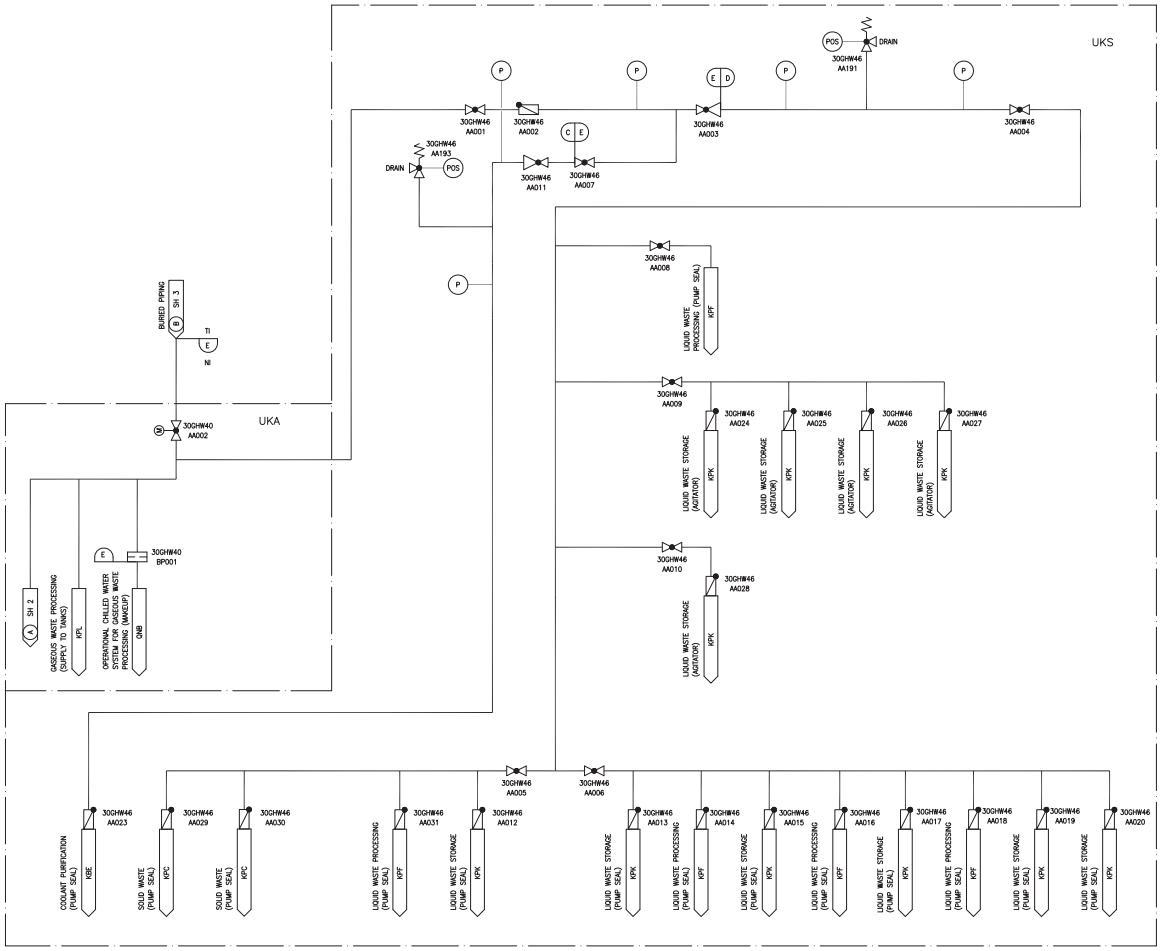

GHW – SEAL WATER SUPPLY SYSTEM
KBE – COOLANT PURIFICATION SYSTEM
KPC – SOLID WASTE SYSTEM
KPL – GASEOUS WASTE PROCESSING SYSTEM
KPF – LIQUID WASTE PROCESSING SYSTEM
KPK – LIQUID WASTE STORAGE SYSTEM
QNB – OPERATIONAL CHILLED WATER SYSTEM FOR GASEOUS WASTE PROCESSING SYSTEM

UKA – NUCLEAR AUXILIARY BUILDING
UKS – RADIOACTIVE WASTE PROCESSING BUILDING

E	E	235	140	NSC
D	E	235	140	NSC
C	E	235	140	NSC
DESIGN AREA	SSC QUALITY GROUP	DESIGN PRESSURE PSIG	DESIGN TEMPERATURE °F	SSC SEISMIC CLASS

REV 002
GHW01T2

Figure 9.2.7-1—Seal Water Supply System
Sheet 2 of 3

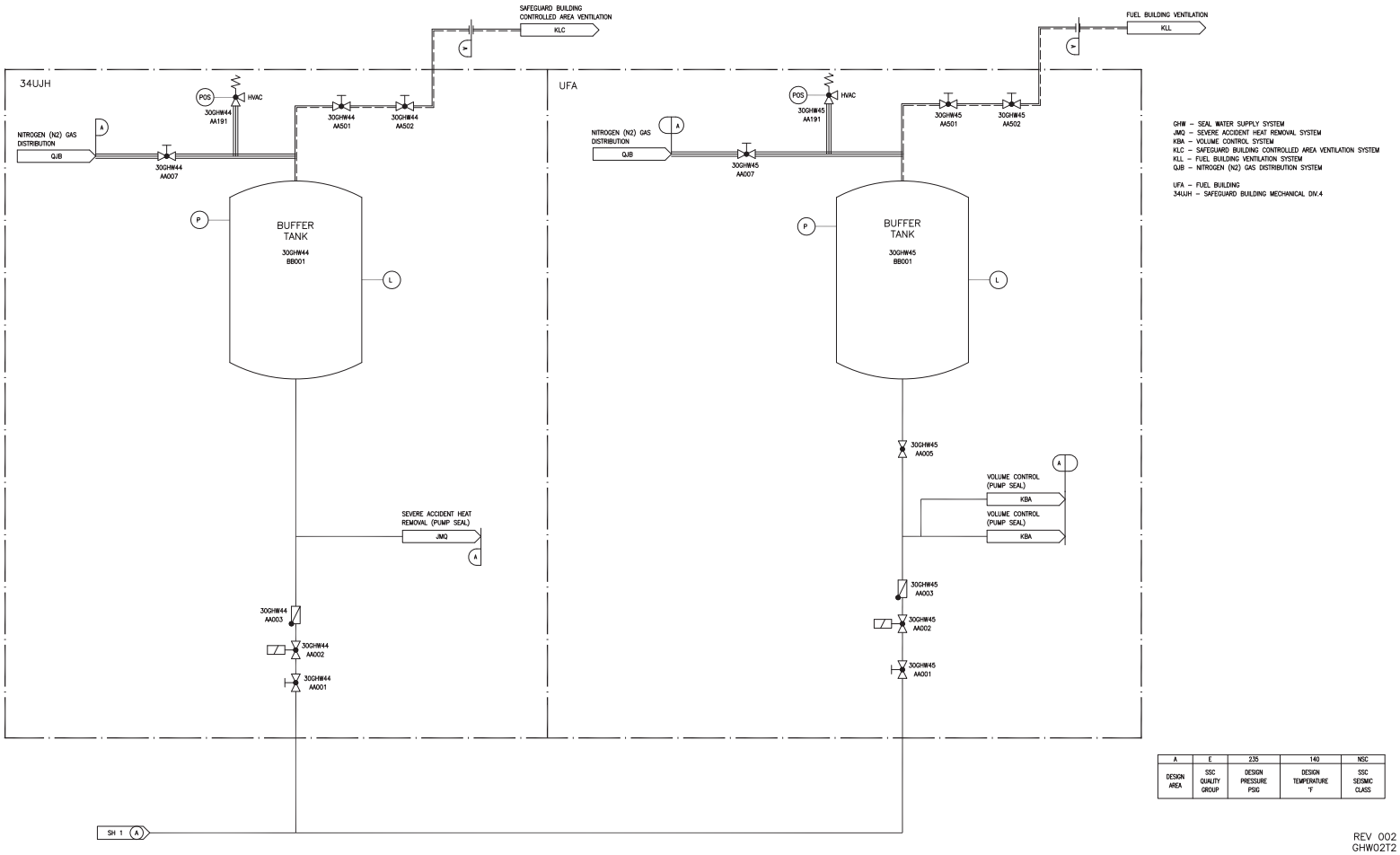

Figure 9.2.7-1—Seal Water Supply System
Sheet 3 of 3

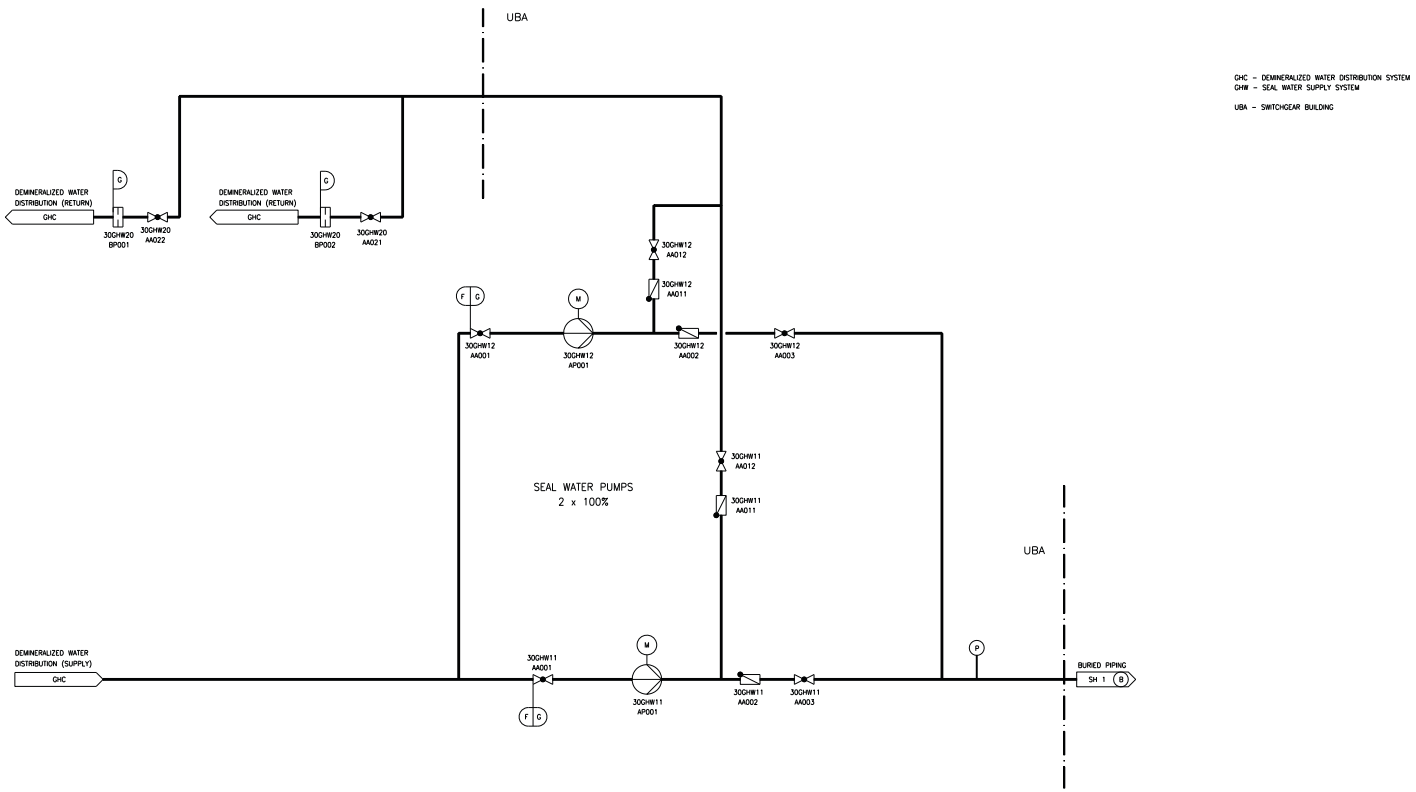

GHC – DEMINERALIZED WATER DISTRIBUTION SYSTEM
GHW – SEAL WATER SUPPLY SYSTEM

UBA – SWITCHGEAR BUILDING

G	E	235	140	NSC
F	E	235	140	NSC
DESIGN AREA	SSC QUALITY GROUP	DESIGN PRESSURE PSIG	DESIGN TEMPERATURE °F	SSC SEISMIC CLASS

GHW03T2

Next File

9.2.8 Safety Chilled Water System

The safety chilled water system (SCWS) supplies refrigerated chilled water to the safety-related heating, ventilation and air conditioning (HVAC) systems and the low head safety injection system (LHSI) pumps and motors in Safeguard Buildings (SB) 1 and 4 and the fuel building ventilation system (FBVS). The SCWS consists of four trains, numbered 1 to 4. Train 1 and Train 2 ~~can be~~are interconnected and Train 3 and Train 4 ~~can be~~are interconnected.

9.2.8.1 Design Bases

The SCWS provides chilled water as a heat sink to the LHSI pumps and the safety-related HVAC systems, which in turn provides an acceptable environment for safety-related equipment and main control room (MCR) habitability in the event of a design basis accident (DBA) (GDC 44). The SCWS is classified as a safety-related system and has safety-related design functions. The system is designed Seismic Category I. Safety-related systems are required to function following a DBA and are required to achieve and maintain a safe shutdown condition.

- Each SCWS train is protected from the effects of natural phenomena, such as earthquakes, tornadoes, hurricanes, and floods (GDC 2). The SCWS are located in Seismic Category I Safeguard Buildings, which are designed to withstand the effects of earthquakes, tornadoes, hurricanes, floods, external missiles, and other natural phenomena. The SCWS cross-tie piping will be routed through the stair tower structures between SB 1 and SB 2, and between SB 3 and SB 4. The stair tower structures are Seismic Category I and designed to withstand the effects of earthquakes, tornadoes, hurricanes, floods, external missiles, and other natural phenomena.

- Each train remains functional and performs its intended functions for all postulated environmental conditions or dynamic effects, such as pipe breaks (GDC 4).

- Safety functions are performed assuming a single active component failure coincident with the loss of offsite power (GDC 44).

- The SCWS is not shared with any other plant unit (GDC 5).

- Active components of the SCWS trains are capable of being periodically tested and required inspections can be performed during plant operation (GDC 45 and GDC 46).

The SCWS trains use design and fabrication codes consistent with the safety classification and seismic design criteria provided in Section 3.2. The quality group classification meets the requirements of RG 1.26. The seismic design of the system components meets the guidance of RG 1.29. The power and control functions are designed in accordance with RG 1.32.

The SCWS operates continuously as described for the safety-related function when the plant is in normal conditions of startup, shutdown, power operation, and outages.

9.2.8.2 System Description

9.2.8.2.1 General Description

The SCWS consists of four trains numbered 1 to 4. Each is located in one of the four SBs. Each SCWS train is a closed loop system that supplies chilled cooling water for specified area HVAC air handling units (AHU) and Division 1 and 4 low head safety injection system (LHSI) pump seal coolers and motor coolers~~, where required, process systems cooling~~. Each train consists of a refrigeration chiller unit, two pumps, expansion tank, valves, ~~user loads,~~ and the associated piping and controls.

Normally~~,~~ open, motor~~-~~-operated, cross-tie valves (MOV) interconnect the supply and return piping of Train 1 with Train 2, and the supply and return piping of Train 3 with Train 4. Each SCWS train ~~chiller~~ is sized to meet the system load requirements of two divisional trains.

The SCWS provides chilled water to the HVAC cooling coils of the main control room (MCR), the electrical division rooms (SBVSE) in the SBs, SB controlled-area ventilation system (SBVS), FBVS, and the ~~low head safety injection system (~~LHSI~~)~~ pump seal coolers and motor coolers~~motors~~ in SB Divisions 1 and 4.

Bounding system design parameters for all operating conditions are listed on Table 9.2.8-1—Safety Chilled Water Design Parameters for Cross-Tied Operation and Table 9.2.8-2—Safety Chilled Water Design Parameters Each Division Isolated. The SCWS flow diagram is shown in Figure 9.2.8-1—Safety Chilled Water System Diagram. Pipe diameters for the SCWS are based on limiting the flow velocity to a range of 4 to 10 ft/second for normal modes of operation that are expected to occur frequently.

Refer to Section 12.3.6.5.9 for safety chilled water system design features which demonstrate compliance with the requirements of 10 CFR 20.1406.

9.2.8.2.2 Component Description

The general description of the component design features for the SCWS is provided below. Refer to Section 3.2 for details of the seismic and system quality group classification of the SCWS.

Chilled Water Pumps

Two SCWS pumps ~~in each of the four trains~~ in the operating train in each SCWS divisional pair circulate chilled water between the SCWS users in two divisions and the evaporator of the chiller refrigeration unit ~~in each train~~.

The required flow rate of each SCWS pump is defined by the heat to be removed from the system loads. As a minimum, the pumps are designed to fulfill the corresponding minimal required design mass flow rate under the following conditions:

- Fluctuations in the supplied electrical frequency.
- Increased pipe roughness due to aging and fouling.
- Fouled debris filters.
- Maximum pressure drop through the system heat exchangers.
- Minimum water level in the expansion tank considers net positive suction head to prevent cavitation of the SCWS pump and prevent vortex effects.

Determination of the discharge head of the pumps is based on dynamic pressure losses and head losses of the mechanical equipment of the associated SCWS at full load operation.

Air-Cooled Chiller Refrigeration Unit

SCWS, Trains 1 and 4, each contain one air-cooled chiller refrigeration unit that functions to refrigerate chilled water to its design basis temperature of 41°F for supply to the system users. These chillers are located in dedicated rooms of the SBs. Each chiller contains a condenser, compressors, evaporator, and associated piping and controls. Environmentally safe refrigerants are used in these chillers.

Water-Cooled Chiller Refrigeration Unit

SCWS, Trains 2 and 3, each contain one water-cooled chiller refrigeration unit that functions to refrigerate chilled water to its design bases temperature of 41°F for supply to the HVAC users. These chillers are located in dedicated rooms of the SBs. Each chiller contains a condenser, compressors, evaporator, and associated piping and controls. Environmentally safe refrigerants are used in these chillers.

Diaphragm Expansion Tank

Each SCWS train contains a diaphragm expansion tank with a nitrogen fill connection in each of the SBs. The expansion tank provides for changes in volume, pump NPSH, and establishes a point of reference pressure for the closed-loop system. These tanks are provided with relief valve overpressure protection. The expansion tank nitrogen maintains the operating static pressure to keep the highest point in the SCWS filled. The expansion tank pressure also keeps the SCWS pump suction pressure well above the fluid vapor pressure to enhance available NPSH. The normal water volume in the expansion tank allows for volume displacement due to temperature changes and operating transitions. A complete loss of nitrogen or water volume in an expansion

tank will close the cross-tie valves on MIN-2 pressure and trip the SCWS operating pumps of the affected chiller train after reaching MIN-3 pressure.

The SCWS diaphragm expansion tank will contain a reserve volume for seven days of normal SCWS leakage. The leakage rate for each cross-tie supply and return valve is 3.6 in^3/hr. Valve leakage is based on ASME QME-1 that identifies a nominal valve leak rate of 0.6 $in.^3$/hr/NPS of nominal valve size. The seven-day leakage volume also includes leakage of 0.1 gal /hr for valve stem packing, pump seal, tank diaphragm, and any remaining undefined leakage.

Each SCWS expansion tank will include a minimum water volume of 100 gallons to accommodate potential system leakage for seven days continuous for 24 hours with no makeup source in post-seismic conditions of 0.5 gal/hr.

In cross-tie operation, the expansion tank in the standby train in a divisional pair is not isolated from the system. Sluicing of water between two expansion tanks as system loads cycle or on trip of a chiller and start of the standby unit is precluded in the design due to the dampening effect of the diaphragm and the compressed nitrogen, resistance of the long length of piping between tanks, and resistance of the small diameter piping at the tank connection.

Cooling Coils

Multiple HVAC cooling coils in each train receive chilled water for heat removal from selected HVAC users. The SCWS also cools Train 1 and Train 4 LHSI motor cooler and pump seal~~ing~~ cooler.

Relief Valves

A relief valve located in each SCWS train protects the chilled water closed loop against high pressure. The relief valve set point will prevent the SCWS pressure from exceeding the system design pressure. The design pressure is based on the total of pump shut-off head, the operating static pressure, and the lowest elevation in the SCWS. The setpoint is established in accordance with ASME Boiler and Pressure Vessel Code, Section III, Class 3 (Reference 1).

Chiller Bypass Valve

The chiller bypass valve installed in the operating SWCS train varies flow returning to the chiller to prevent freezing at the evaporator coil. Upstream filters are provided as a precaution to protect downstream control valves which contain internals sensitive to particle trapping.

Cross-Tie Valves

A cross-tie is established for normal operation between the supply and the return piping of each divisional pair (1/2 or 3/4) of SCWS trains that includes MOVs and associated controls. There are two isolation valves per train (one supply and one return) that are located in their respective Safeguards Buildings. The valves are divisionally powered. During normal operations the cross-tie isolation valves are normally open and only one chiller train is operating.

HVAC Cooling Coil Flow Control Valves

The flow rate through the cooling coils for the electrical division of the safeguards building ventilation system and the ventilation of the main control room air conditioning system are each regulated by a flow control valve positioned by room temperature or manually from the control room to provide the required flow. All other HVAC cooling coils and LHSI are supplied by fixed SCWS flow rates to confirm operability of all loads.

Filters

Liquid filters are installed upstream of the modulating flow control valves to protect throttling surfaces from minor corrosion debris, or debris from maintenance activities. A differential pressure limit across the filter, to allow for 30 days of operation post DBA, is maintained by normal maintenance.

9.2.8.3 System Operation

9.2.8.3.1 Normal Operation

During normal operation, at least one train of the divisional pair is in operation. Either Train 1 or Train 2 chiller provides safety chilled water cooling for all SCW loads within Safeguard Building Divisions 1 and 2, and the associated FBVS load. Likewise, the chiller from either Train 3 or 4 provides safety chilled water cooling for both Safeguard Divisions 3 and 4 and the associated FBVS load. During normal operation, the cross-tie isolation valves (supply and return for both divisions) are normally open. The non-operating chiller and pump(s) are maintained in standby. This configuration also allows for maintenance on the non-operating chiller and pump(s). If the normal operating train pump or chiller fails, a switchover sequence to the standby train is automatically initiated. A planned switchover of the operating train is manually initiated from the MCR.

The chilled water distribution circuit operates with a variable flow rate that is governed by the position of the control valves associated with supplied user loads. A regulated chilled water bypass line is provided between the refrigeration–evaporator outlet line and the return line to prevent freezing. A diaphragm expansion tank is

used for equalization of pressure and volumetric expansion and helps maintain the requisite static system pressure. A relief valve on the connecting line prevents the line design pressure from being exceeded. Piping voids associated with potential waterhammer are precluded by the constant pressure maintained in the nitrogen-charged expansion tank in each ~~division~~train.

The SCWS design minimizes the potential for dynamic flow instabilities and water hammer by avoiding high line velocities and has specified closing valve speeds that are slow enough to prevent damaging pressure increases. Vents are provided to vent to fully fill components and piping at high points in which voids could occur. The Nitrogen pressurized expansion tank confirms system high points are retained at positive pressure.

A manually operated make up demineralized water supply is used when water loss resulting from operational measures (e.g., venting and draining) is indicated by an expansion tank pressure instrument.

The SCWS is treated with hydrazine in low concentration for corrosion control. Monitoring of the water chemistry is provided by means of local sampling.

9.2.8.3.2 Abnormal Operation

In the event of a DBA with concurrent loss of offsite power (LOOP) the operating train of a divisional pair receives a "Start" signal to return the operating train to operation after load shed. If an active single failure occurs (assume either the EDG fails to start or the SCW train pump or chiller does not re-start), then the standby train receives a "Start" signal. This sequence confirms that one train of a divisional pair is operating.~~ At or before the end of 24 hours post DBA, the cross-tie isolation valves are manually isolated to protect against a passive failure.~~

The SCWS is powered from the emergency diesel generators (EDG) and continues to function during a DBA. Trains 1 and 4 of the SCWS provide a heat sink to s~~ystem users and~~Division 1 and 4 LHSI pumps and HVAC systems in the event of a severe accident or station blackout (SBO). Trains 1 and 4 are powered from motor control centers that are re-powered by the station blackout diesels during an SBO event.

Each SCWS expansion tank will maintain a defense in depth post-seismic emergency manual makeup spool piece connection to a seismic makeup water source post seven day water supply from the Seismic II fire water distribution system inside the Nuclear Island. The seismic makeup connection is shown on Figure 9.2.8-1. The fire water distribution system is designed to remain functional after a SSE as described in Section 9.5.1.2.1.~~Under seismic or post-accident conditions, when demineralized water may be unavailable for SCWS makeup, a manual connection to the fire water distribution system is available to provide a seismic makeup source within a time frame consistent~~

~~with the SCWS expansion tank capacity to accommodate expected out-leakage from the system for seven days.~~

A mechanical or electrical failure of the running SCWS pump results in a ~~transfer~~switchover to the standby ~~pump~~train.

Each refrigeration chiller in the four trains of the SCWS has three 50 percent capacity compressors to provide sufficient operating redundancy and flexibility in the event of a compressor failure. The two remaining chiller compressors provide 100 percent capacity as described in Section 9.2.8.2.1.

In case of loss of off-site power, each SCWS division is powered from its associated emergency diesel generator (EDG). To allow divisional maintenance (e.g., maintenance on EDGs), the SCWS safety-related motor operated flow control valves and the motor operated cross-tie valves are powered from the normal 1E power division or alternately fed from the adjacent class 1E power division. In cross-tie operation, this provides the capability to operate the SCWS flow control valves in two cross-tied trains, if necessary switch to the standby train in the divisional pair, or if necessary close the cross-tie valves. Division 2 is the alternate feed for Division 1 and vice versa. Division 4 is the alternate feed for Division 3 and vice versa.

~~To allow divisional maintenance (e.g., maintenance on emergency diesel generators), the required SCWS safety-related components are alternately fed from the adjacent division to provide adequate cooling of certain safety-related components during a design basis event.~~

9.2.8.4 Safety Evaluation

- The SCWS is designed as Seismic Category I as described in Section 3.2 to operate in all plant modes of operation including design basis events. The SCWS divisions are located in SBs 1 to 4, respectively. The SBs are designed to withstand the effects of earthquakes, tornadoes, hurricanes, floods, external missiles, and other natural phenomena. Section 3.3, Section 3.4, Section 3.5, Section 3.7, and Section 3.8 provide the bases for the adequacy of the structural design of these buildings.

- The SCWS is designed to remain functional after a safe shutdown earthquake. Section 3.7 provides the design loading conditions that were considered. Section 3.5, Section 3.6, and Section 9.5.1 provide the hazards analyses to make sure that a safe shutdown, as outlined in Section 7.4, can be achieved and maintained.

- A four train design with interconnection of Train 1 and Train 2, ~~or~~and interconnection of Train 3 and Train 4 of the SCWS fulfills the single failure criteria. ~~The four trains of safety-related systems are consistent with an N+2 safety concept.~~ The four SCWS trains are backed up by the EDGs. Two of these trains, in Divisions 1 and 4, are also backed up by the SBO diesels.

- Structures, systems and components important to safety in the SCWS are not shared with any other co-located nuclear reactor units.

- Preoperational testing of the SCWS is performed as described in Chapter 14.0. Periodic inservice functional testing is done in accordance with Section 9.2.8.5.

- Section 6.6 provides the ASME Boiler and Pressure Vessel Code, Section XI (Reference 1) requirements that are appropriate for the SCWS.

- Section 3.2 delineates the quality group classification and seismic category applicable to the safety-related portion of this system. Table 9.5.4-1 shows that the components meet the design and fabrication codes given in Section 3.2. All the power supplies and control functions necessary for safe function of the SCWS are Class IE, as described in Chapter 7 and Chapter 8.

- Cooling diversity is created between the load heat sinks of ~~Divisions~~Train 1 and Train 4, and ~~Divisions~~Train 2 and Train 3. ~~Division~~Train 1 and Train 4 chillers are air cooled, and ~~Division~~Train 2 and Train 3 chillers are water cooled by the component cooling water system (CCWS).

- A process radiation monitor is provided in Trains 1 and 4 of the SCWS, downstream of the LHSI pump mechanical seal ~~heat exchanger~~cooler to monitor for possible leakage of radioactive fluid from the heat exchanger. Otherwise, migration of radioactive material from potentially radioactive systems is prevented with a minimum of two heat exchanger barriers. Radiation monitors are in the CCWS to detect radioactive contamination entering and exiting the system.

9.2.8.5 Inspection and Testing Requirements

Prior to initial plant startup, a comprehensive performance test will be performed to verify that the design performance of the system and individual components is attained. Refer to Section 14.2, Test #052, for initial plant testing of the SCWS.

After the plant is brought into operation, periodic tests and inspections of the SCWS components and subsystems are performed to verify proper operation. Scheduled tests and inspections are necessary to verify system operability.

The installation and design of the SCWS provides accessibility for the performance of periodic inservice inspection and testing. Periodic inspection and testing of safety-related equipment verifies its structural and leak tight integrity and its availability and ability to fulfill its functions.

Inservice inspection and testing requirements are in accordance with Section XI of the ASME Code (Reference 1) and the ASME OM Code (Reference 2).

Section 3.9.6 and Section 6.6 describe the inservice testing and inspection requirements, respectively. Refer to Section 16.0, Surveillance Requirement (SR) 3.7.9 for surveillance requirements that verify continued operability of the SCWS.

The SCWS expansion tank pressure indication is transmitted to the MCR for the provision of real time trending data on expansion tank pressure and volume equivalent to identify leakage. This provides the operators the ability to take corrective action prior to exceeding the maximum allowed seven day train leakage. The pressure differential in equivalent inches of water is obtained from the pressure indication at the top and bottom of the tank.

A Surveillance Requirement will verify SCWS train leakage on a 24 month frequency. Plant procedures and controls associated with leakage trending will be implemented by the COL applicant.

9.2.8.6 Instrumentation Requirements

The SCWS ~~system~~ is controlled by the safety automation system (SAS). The normal indication, manual control, and alarm functions are provided by the process information and control system (PICS). Instrument display location, and input to alarm and automatic or manual functions for instruments shown in Figure 9.2.8-1 are provided in Table 9.2.8-3.

The chiller evaporator outlet temperature is monitored. An alarm occurs if temperature reaches high setpoint. An automatic switchover to the standby train occurs if temperature reaches high-high setpoint.

An automatic switchover to operate the opposite chiller train occurs if the chilled water flow through the evaporator reaches a MIN-2 set point for the running train. Then, if the cross-tie valves are open and the opposite chiller is in stand-by, the opposite (non-running) chiller pumps are automatically started. When differential pressure across the opposite chiller evaporator is greater than MIN-1, then the opposite chiller is automatically started and the initial running chiller train is stopped manually from the MCR.

The following automatic functions represent generic steps in train switchover to be performed or validated as a result of the abnormal condition in the affected train:

- Standby train prerequisites are met for train startup.
- Cross-tie MOVs are open-validate MOV position.
- Start standby train pump 1.
- Start standby train pump 2.
- Start standby train chiller unit.
- Enable the control loop for differential pressure across the evaporator, which starts system flow regulation by the bypass control valve in the standby train.

- Enable the pressure monitoring loop for system pressure.

Annunciation occurs on automatic switchover.

When the standby train is in operation, the following actions are manually initiated from the control room to stop the previously operating train.

- Standby train is in operation –validate operation.
- Stop operating chiller (if running).
- Stop operating train pump 1 (if running).
- Stop operating train pump 2 (if running).
- Disable the operating train pressure monitoring loop for system pressure.
- Close the operating train bypass control valve.
- Disable the operating train control loop for differential pressure across the evaporator.

System pressure is monitored with the aid of two pressure measurements for each train. The two measurements are combined in one measuring point. If the pressure falls to MIN-1, an alarm is issued for operators to check nitrogen charge or provide makeup with demineralized water. The SCWS expansion tank MIN-1 pressure alarm is below the lowest normal system operating pressure with sufficient margin to avoid a spurious alarm. SCWS expansion tank MIN-2 pressure is below MIN-1, but above the inventory margin required for seven days of normal operation. SCWS expansion tank MIN-3 pressure is below the seven day normal makeup margin, but high enough to provide sufficient NPSH and prevent pump cavitation and still retain sufficient inventory margin in the expansion tank.

If the system experiences excessive leakage in excess of system makeup capability, the cross-tie isolation MOVs are closed manually from the MCR on Low-2 system pressure. The non-operating standby train automatically starts on Low-2 pressure. The train without excessive leakage returns to pressure and the train with excessive leakage is manually stopped from the DCS.

If the pressure falls to MIN-3, the following measures are initiated automatically for the affected train:

- Chilled water system “Protection OFF” alarms. The MIN-3 system pressure setpoint trip occurs before the pressure corresponding to the minimum required available NPSH is reached.
- Refrigeration unit shuts down.

- Chilled water circulating pump shuts down.

A humidity sensor is installed in the nitrogen region of the diaphragm expansion tank. This sensor issues a MAX-1 alarm indicating a leaky diaphragm if humidity exceeds a set limit.

To provide a constant water flow through the evaporator for the refrigeration unit, a controlled bypass is implemented between chilled water feed and chilled water return by means of a control valve. The controlled variable is differential pressure across the chiller evaporator.

The affected chilled water system pump and chiller is deactivated by a "Protection OFF" command in the case of the following faults:

- Pump failure.
- MIN-3.
- Minimum pressure limit for the system.
- Emergency power condition–under-voltage shutdown.

In the event of a DBA with LOOP the operating chiller and pumps will restart automatically after power is restored. In the event the operating train fails, the opposite stand-by train starts within one minute. In the event that the cross-tie valves close with one pump running in the operating SCWS division, the second standby pump starts within one minute if the running pump fails.

The SCWS pumps and chiller can be started manually assuming the SCWS is filled and pressurized to the normal operating range in the expansion tank, and if the cross-tie valves are open and the pumps in the opposite division of the pair are not running. If the cross-tie valves are shut and the paired divisions are isolated, then a pump in either or both divisions can be started with the SCWS filled to the normal operating pressure band in the expansion tank. Running pumps will trip on a pump fault, chiller fault, low evaporator flow (MIN-2), or MIN-3 pressure in the expansion tank. In the event of a running pump trip on a pump fault when the cross-tie valves are shut and the division train is operating separate from the other division pair, then the second pump is on stand-by and starts when the SCWS fills to the normal operating pressure band in the expansion tank.

In the event of a DBA with LOOP, the running pumps automatically restart under the EDG loading sequence. The pumps in the opposite train starts if the running pumps fail.

9.2.8.7 References

1. ASME Boiler and Pressure Vessel Code, Section XI: "Rules for Inservice Inspection of Nuclear Facility Components," The American Society of Mechanical Engineers, 2004.

2. ASME OM Code, "Code for Operation and Maintenance of Nuclear Power Plants," The American Society of Mechanical Engineers, 2004 edition.

Table 9.2.8-1—Safety Chilled Water Design Parameters for Cross-Tied Operation

Description	Technical Data
QKA 10/20/30/40 Evaporator refrigeration capacity	4,388,200 Btu/h
QKA 10/40 Condensing capacity	5,705,000 Btu/h
QKA 20/30 Condensing capacity	5,705,000 Btu/h
QKA 10/40 Condenser Air Flow	586,100 ft^3/min
QKA 10/40 Condenser Fan Power (3-50% capacity fans per condenser)	95 hp
QKA 20/30 Condenser CCW cooling flow	1140 gpm
QKA 10/20/30/40 Required Evaporator Chilled Water Flow	1130 gpm
QKA 10/20/30/40 Required Evaporator Chilled Water Outlet Temperature	41 ^oF
QKA 10/20/30/40 Required Evaporator Chilled Water Inlet Temperature	50 ^oF
QKA 10/20/30/40 Chilled Water Pump AP-107 Required Operating Flow (including margin)	565 gpm
QKA 10/20/30/40 Chilled Water Pump AP-107 Required Operating Head	171 ft
QKA 10/20/30/40 Chilled Water Pump AP-107 Shutoff Head	222 ft
QKA 10/20/30/40 Required Chilled Water Pump AP-107 Hydraulic Horsepower	25 h
SCWS Design Pressure	254 psig

Table 9.2.8-2—Safety Chilled Water Design Parameters Each Division Isolated

Description	Technical Data
QKA 10/40 Evaporator refrigeration capacity	2,394,200 Btu/h
QKA 20/30 Evaporator refrigeration capacity	1,994,000 Btu/h
QKA 10/40 Condensing capacity	3,112,500 Btu/h
QKA 20/30 Condensing capacity	2,592,200 Btu/h
QKA 10/40 Condenser Air Flow	319,740 ft^3/min
QKA 10/40 Condenser Fan Power (3-50% capacity fans per condenser)	52 hp
QKA 20/30 Condenser CCW cooling flow	475 gpm
QKA 10/20/30/40 Required Evaporator Chilled Water Flow	565 gpm
QKA 10/20/30/40 Required Evaporator Chilled Water Outlet Temperature	41 °F
QKA 10/20/30/40 Required Evaporator Chilled Water Inlet Temperature	50 °F
QKA 10/20/30/40 Chilled Water Pump AP-107 Required Operating Flow (including margin)	565 gpm
QKA 10/20/30/40 Chilled Water Pump AP-107 Required Operating Head	131.93 ft
QKA 10/20/30/40 Chilled Water Pump AP-107 Shutoff Head	172 ft
QKA 10/20/30/40 Required Chilled Water Pump AP-107 Hydraulic Horsepower	19 hp
Design Pressure	254 psig

Table 9.2.8-3—Safety Chilled Water Instrumentation
Sheet 1 of 5

MCR/RSS Display	Alarm/Action	Function	Purpose
Expansion Tank Humidity Div 1	MAX-1	N/A	MAX-1 alarm alerts operator to leaking or failed tank diaphragm
Div. 1 System Pressure #1 and #2 combined	MAX-1 MAX-2 MIN-1 MIN-2 MIN-3	MIN-2 Manual Isolation Div. 1 and 2 MIN-3 Div 1 Chiller and Pump shutdown	MAX-2 relief/alarm prevent exceeding design pressure MAX-1 alarm alerts operator to high inventory MIN-1 alarm alerts operator to add inventory MIN-2 alarm alerts operators to close cross-tie valves for inventory protection of a division MIN-3 trips operating pumps at pump min NPSH
Evaporator ΔP Div 1	MIN-1 MIN-2 MAX-1	MODULATE Chiller Bypass Valve 30QKA10CG101	MIN-1 chiller freeze protection – incrementally opens valve MIN-2 alarm alerts operator to low evaporator ΔP. MAX-1 incrementally close valve to control flow
Evaporator Flow DIV 1	MIN-1 MIN-2	MIN-2 Train 1 to Train 2 Switchover	MIN-1 alarm alerts operator to low flow MIN-2 indicates normal flow loss in division and auto switch to alternate division
Tank Humidity Measurement DIV 2	MAX-1		MAX-1 alarm alerts operator to leaking or failed tank diaphragm

Table 9.2.8-3—Safety Chilled Water Instrumentation
Sheet 2 of 5

MCR/RSS Display	Alarm/Action	Function	Purpose
Div. 2 System Pressure #1 and #2 combined	MAX-1 MAX-2 MIN-1 MIN-2 MIN-3	MIN-2 Manual Isolation Div. 1 and 2 MIN-3 DIV 2 Chiller and Pump shutdown	MAX-2 relief/alarm prevent exceeding design pressure MAX-1 alarm alerts operator to high inventory MIN-1 alarm alerts operator to add inventory MIN-2 alarm alerts operators to close cross-tie valves for inventory protection of a division MIN-3 trips operating pumps at pump min NPSH
Evaporator ΔP DIV 2	MIN-1 MIN-2 MAX-1	MODULATE Chiller Bypass Valve 30QKA20CG101	MIN-1 chiller freeze protection – incrementally opens valve MIN-2 alarm alerts operator to low evaporator ΔP. MAX-1 incrementally close valve to control flow
Evaporator Flow DIV 2	MIN-1 MIN-2	MIN-2 Train 2 to Train 1 Switchover	MIN-1 alarm alerts operator to low flow MIN-2 indicates normal flow loss in division and auto switch to alternate division
Tank Humidity Measurement DIV 3	MAX-1		MAX-1 alarm alerts operator to leaking or failed tank diaphragm

Table 9.2.8-3—Safety Chilled Water Instrumentation
Sheet 3 of 5

MCR/RSS Display	Alarm/Action	Function	Purpose
Div. 3 System Pressure #1 and #2 combined	MAX-1 MAX-2 MIN-1 MIN-2 MIN-3	MIN-2 Manual Isolation Div. 1 and 2 MIN-3 DIV 3 Chiller and Pump shutdown	MAX-2 relief/alarm prevent exceeding design pressure MAX-1 alarm alerts operator to high inventory MIN-1 alarm alerts operator to add inventory MIN-2 alarm alerts operators to close cross-tie valves for inventory protection of a division MIN-3 trips operating pumps at pump min NPSH
Evaporator ΔP DIV 3	MIN-1 MIN-2 MAX-1	MODULATE Chiller Bypass Valve 30QKA30CG101	MIN-1 chiller freeze protection – incrementally opens valve MIN-2 alarm alerts operator to low evaporator ΔP MAX-1 incrementally close valve to control flow
Evaporator Flow DIV 3	MIN-1 MIN-2	MIN-2 Train 3 to Train 4 Switchover	MIN-1 alarm alerts operator to low flow MIN-2 indicates normal flow loss in division and auto switch to alternate division
Tank Humidity Measurement DIV 4	MAX-1		MAX-1 alarm alerts operator to leaking or failed tank diaphragm

Next File

Table 9.2.8-3—Safety Chilled Water Instrumentation
Sheet 4 of 5

MCR/RSS Display	Alarm/Action	Function	Purpose
Div. 4 System Pressure #1 and #2 combined	MAX-1 MAX-2 MIN-1 MIN-2 MIN-3	MIN-2 Manual Isolation Div. 1 and 2 MIN-3 DIV 4 Chiller and Pump shutdown	MAX-2 relief/alarm prevent exceeding design pressure MAX-1 alarm alerts operator to high inventory MIN-1 alarm alerts operator to add inventory MIN-2 alarm alerts operators to close cross-tie valves for inventory protection of a division MIN-3 trips operating pumps at pump min NPSH
Evaporator ΔP DIV 4	MIN-1 MIN-2 MAX-1	MODULATE Chiller Bypass Valve 30QKA40CG101	MIN-1 chiller freeze protection – incrementally opens valve MIN-2 alarm alerts operator to low evaporator ΔP. MAX-1 incrementally close valve to control flow
Evaporator Flow DIV 4	MIN-1 MIN-2	MIN-2 Train 4 to Train 3 Switchover	MIN-1 alarm alerts operator to low flow MIN-2 indicates normal flow loss in division and auto switch to alternate division
Chiller Bypass Valve Position Div 1	N/A	Evaporator Flow Control	Valve position status
Chiller Bypass Valve Position Div 2	N/A	Evaporator Flow Control	Valve position status
Chiller Bypass Valve Position Div 3	N/A	Evaporator Flow Control	Valve position status
Chiller Bypass Valve Position Div 4	N/A	Evaporator Flow Control	Valve position status
SAC Coil Throttle Valve Position Div1	N/A	HVAC Coil Flow Control	Valve position status
SAC Coil Throttle Valve Position Div2	N/A	HVAC Coil Flow Control	Valve position status
SAC Coil Throttle Valve Position Div3	N/A	HVAC Coil Flow Control	Valve position status

Table 9.2.8-3—Safety Chilled Water Instrumentation
Sheet 5 of 5

MCR/RSS Display	Alarm/Action	Function	Purpose
SAC Coil Throttle Valve Position Div4	N/A	HVAC Coil Flow Control	Valve position status
SAB Coil Throttle Valve Position Div1	N/A	HVAC Coil Flow Control	Valve position status
SAB Coil Throttle Valve Position Div2	N/A	HVAC Coil Flow Control	Valve position status
SAB Coil Throttle Valve Position Div3	N/A	HVAC Coil Flow Control	Valve position status
SAB Coil Throttle Valve Position Div4	N/A	HVAC Coil Flow Control	Valve position status
Division 1 To 2 Cross-connect Supply MOV Position	N/A	Switchover Valve OPEN/CLOSE Confirmation	Valve position status
Division 1to 2 Cross-connect Return MOV Position	N/A	Switchover Valve OPEN/CLOSE Confirmation	Valve position status
Div 2 To 1 Cross-connect Supply MOV POS	N/A	Switchover Valve OPEN/CLOSE Confirmation	Valve position status
Div 2 To 1 Cross-connect Return MOV POS	N/A	Switchover Valve OPEN/CLOSE Confirmation	Valve position status
Div 3 To 4 Cross-connect Supply MOV POS	N/A	Switchover Valve OPEN/CLOSE Confirmation	Valve position status
Div 3 To 4 Cross-connect Return MOV Position	N/A	Switchover Valve OPEN/CLOSE Confirmation	Valve position status
Div 4 To 3 Cross-connect Supply MOV POS	N/A	Switchover Valve OPEN/CLOSE Confirmation	Valve position status
Div 4 To 3 Cross-connect Return MOV POS	N/A	Switchover Valve OPEN/CLOSE Confirmation	Valve position status
LHSI Seal Cooler	N/A	OPEN/CLOSE Confirmation	Valve position status

Figure 9.2.8-1—Safety Chilled Water System Diagram
Sheet 1 of 4

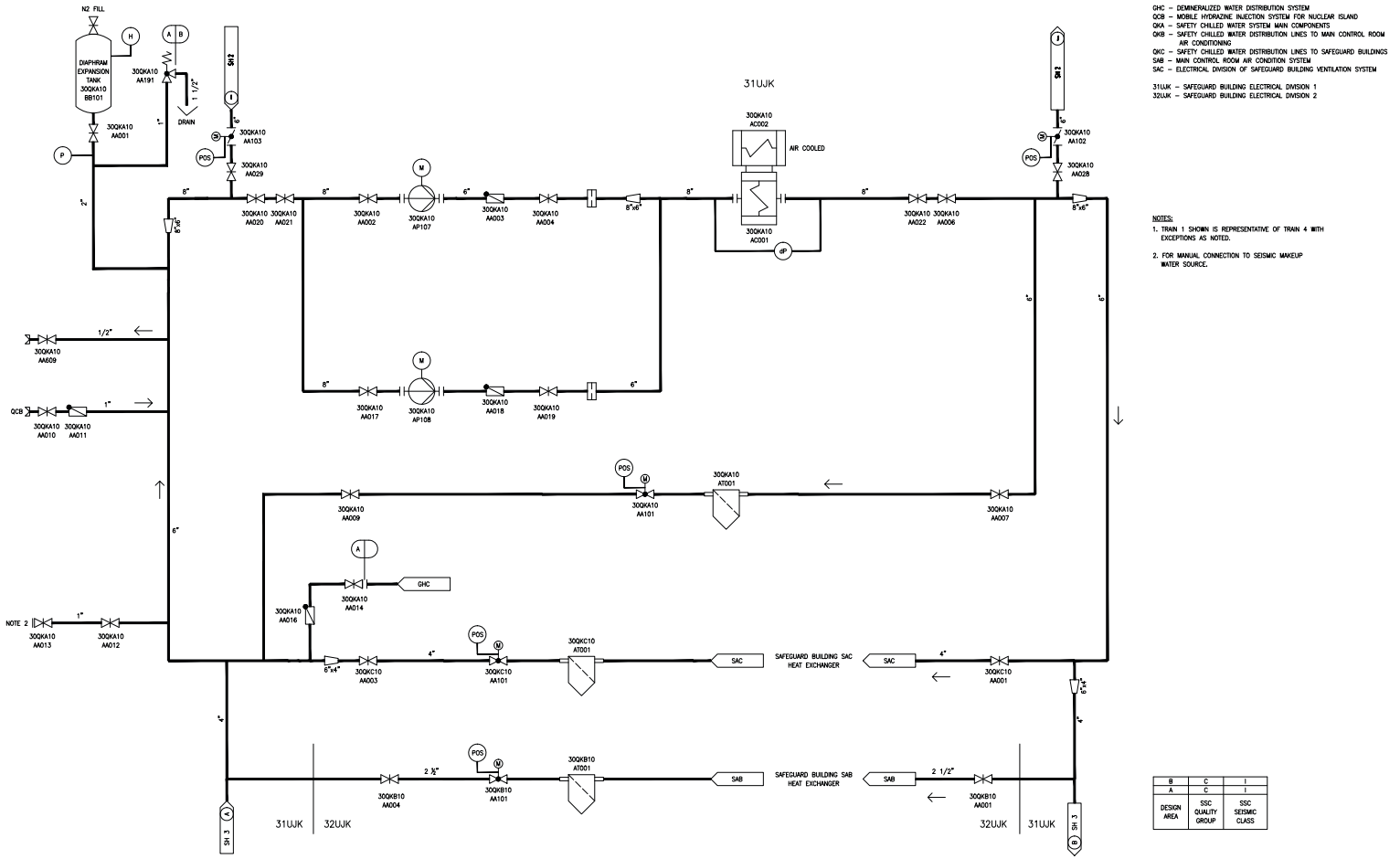

GHC – DEMINERALIZED WATER DISTRIBUTION SYSTEM
QCB – MOBILE HYDRAZINE INJECTION SYSTEM FOR NUCLEAR ISLAND
QKA – SAFETY CHILLED WATER SYSTEM MAIN COMPONENTS
QKB – SAFETY CHILLED WATER DISTRIBUTION LINES TO MAIN CONTROL ROOM AIR CONDITIONING
QKC – SAFETY CHILLED WATER DISTRIBUTION LINES TO SAFEGUARD BUILDINGS
SAB – MAIN CONTROL ROOM AIR CONDITION SYSTEM
SAC – ELECTRICAL DIVISION OF SAFEGUARD BUILDING VENTILATION SYSTEM

31UJK – SAFEGUARD BUILDING ELECTRICAL DIVISION 1
32UJK – SAFEGUARD BUILDING ELECTRICAL DIVISION 2

NOTES:
1. TRAIN 1 SHOWN IS REPRESENTATIVE OF TRAIN 4 WITH EXCEPTIONS AS NOTED.
2. FOR MANUAL CONNECTION TO SEISMIC MAKEUP WATER SOURCE.

B	C	I
A	C	I
DESIGN AREA	SSC QUALITY GROUP	SSC SEISMIC CLASS

REV 003
QKA01T2

Figure 9.2.8-1—Safety Chilled Water System Diagram
Sheet 2 of 4

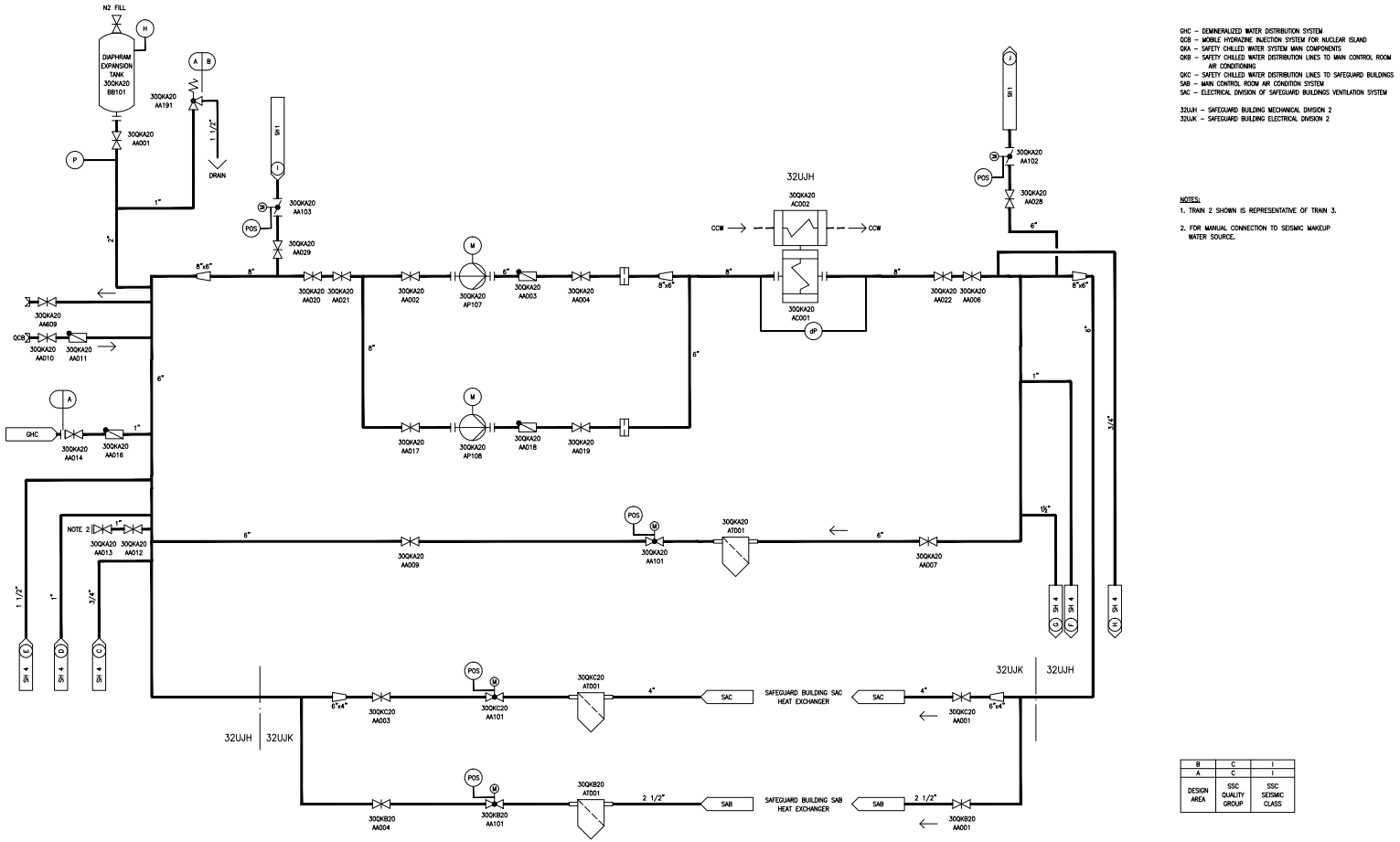

GHC – DEMINERALIZED WATER DISTRIBUTION SYSTEM
OCB – MOBILE HYDRAZINE INJECTION SYSTEM FOR NUCLEAR ISLAND
QKA – SAFETY CHILLED WATER SYSTEM MAIN COMPONENTS
QKB – SAFETY CHILLED WATER DISTRIBUTION LINES TO MAIN CONTROL ROOM AIR CONDITIONING
QKC – SAFETY CHILLED WATER DISTRIBUTION LINES TO SAFEGUARD BUILDINGS
SAB – MAIN CONTROL ROOM AIR CONDITION SYSTEM
SAC – ELECTRICAL DIVISION OF SAFEGUARD BUILDINGS VENTILATION SYSTEM

32UJH – SAFEGUARD BUILDING MECHANICAL DIVISION 2
32UJK – SAFEGUARD BUILDING ELECTRICAL DIVISION 2

NOTES:
1. TRAIN 2 SHOWN IS REPRESENTATIVE OF TRAIN 3.
2. FOR MANUAL CONNECTION TO SEISMIC MAKEUP WATER SOURCE.

B	C	I
A	C	I
DESIGN AREA	SSC QUALITY GROUP	SSC SEISMIC CLASS

REV 003
QKA02T2

Figure 9.2.8-1—Safety Chilled Water System Diagram
Sheet 3 of 4

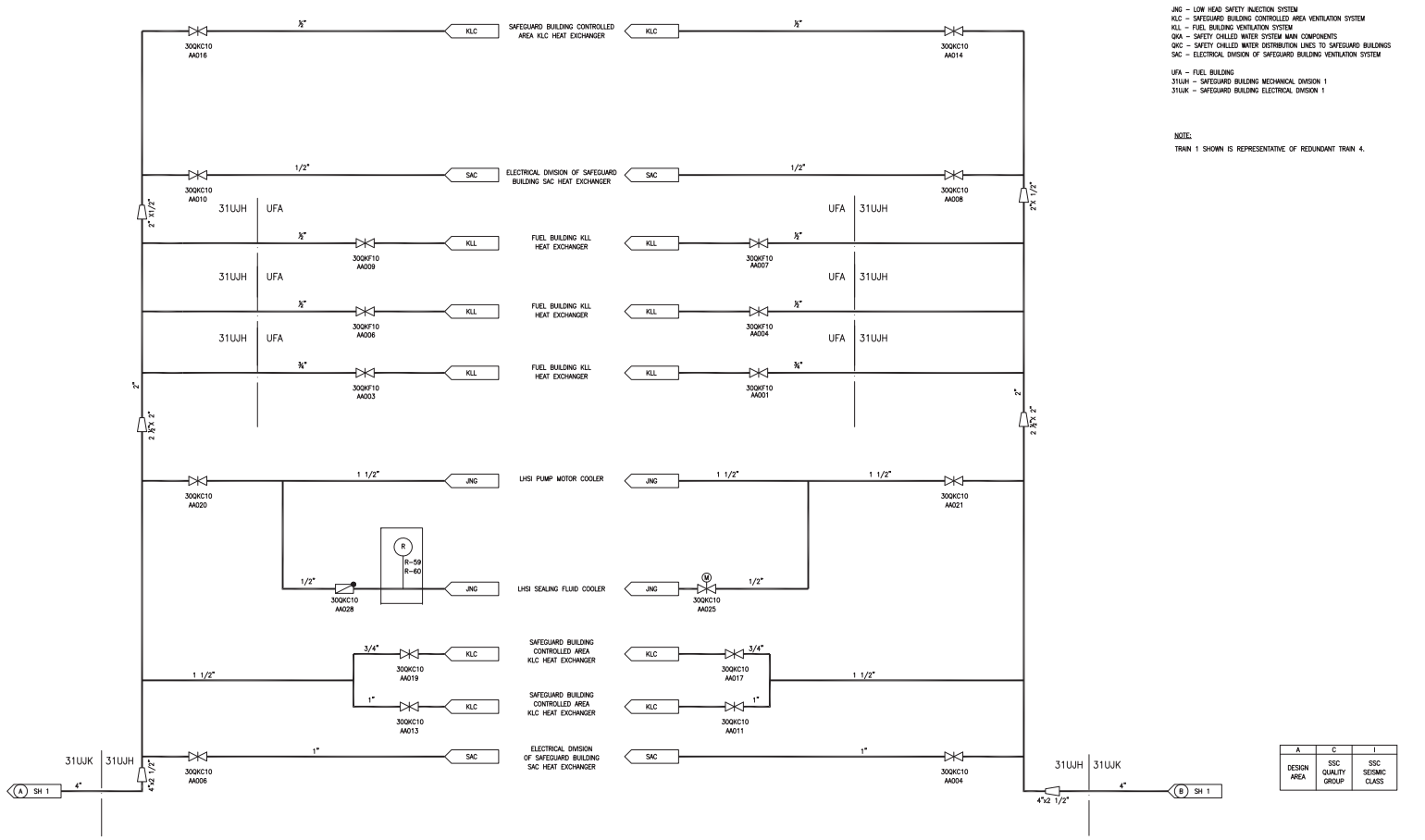

Figure 9.2.8-1—Safety Chilled Water System Diagram
Sheet 4 of 4

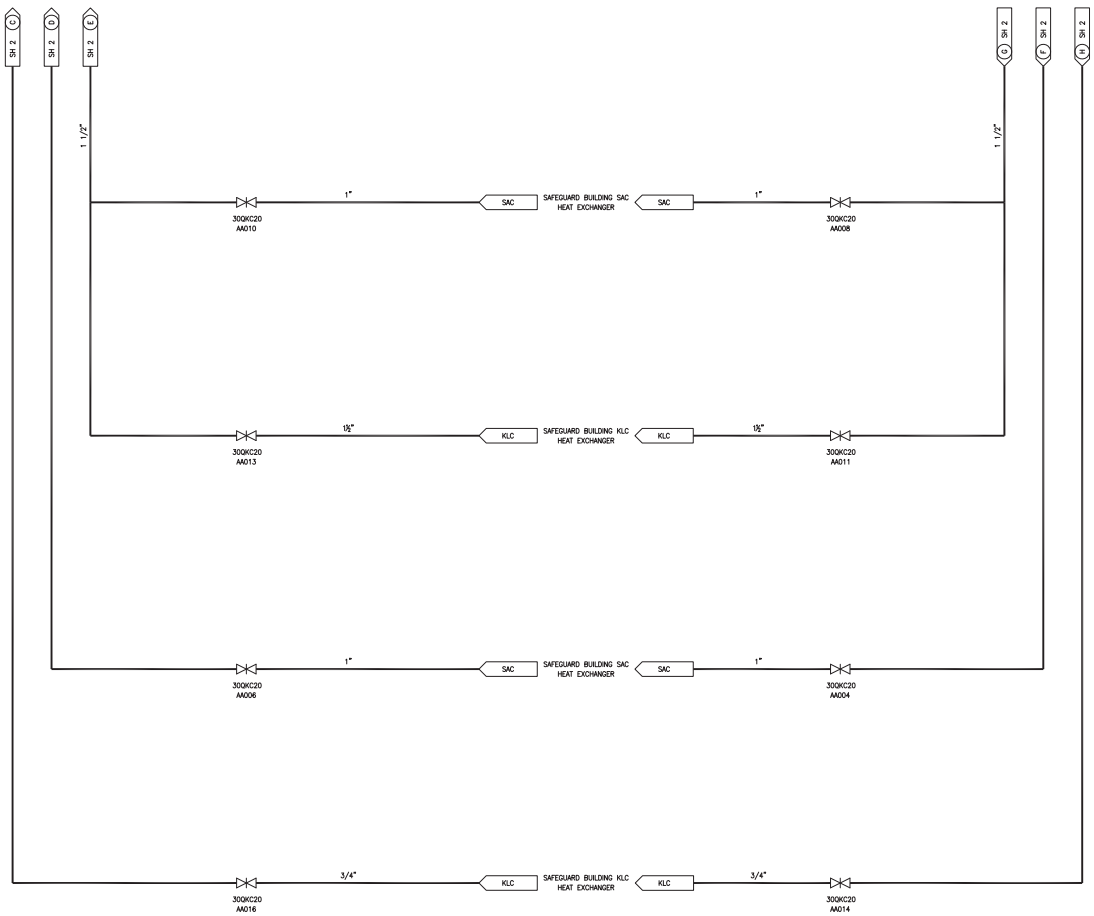

KLC – SAFEGUARD BUILDING CONTROLLED AREA VENTILATION SYSTEM
QKA – SAFETY CHILLED WATER SYSTEM MAIN COMPONENTS
QKC – SAFETY CHILLED WATER DISTRIBUTION LINES TO SAFEGUARD BUILDINGS
SAC – ELECTRICAL DIVISION OF SAFEGUARD BUILDING VENTILATION SYSTEM

32LUH – SAFEGUARD BUILDING MECHANICAL DIVISION 2

NOTE:

TRAIN 2 SHOWN IS REPRESENTATIVE OF REDUNDANT TRAIN 3.

A	C	I
DESIGN AREA	SSC QUALITY GROUP	SSC SEISMIC CLASS

REV 003
QKA04T2

Next File

9.3.3.3 Safety Evaluation

Safety-related components and equipment in the NIDVS include containment isolation valves (CIV), connecting piping and penetrations. CIVs are located in portions of the following subsystems:

- Drains/vents and safety valve discharges system - primary effluents inside RB.
- Type 1 floor drains system - RB floor drains.
- Type 2 floor drains system - low contamination RB drains.

The design of safety-related portions of the NIDVS satisfies GDC 2 regarding the effects of natural phenomena.

- Safety-related portions of the NIDVS are located in the RB and FB. These buildings are designed to withstand the effects of earthquakes, tornadoes, hurricanes, floods, tsunami and seiches. Section 3.3, Section 3.4, Section 3.5, Section 3.7 and Section 3.8 provide the bases for the adequacy of the structural design of the buildings.
- Safety-related portions of the NIDVS are designated Seismic Category I and are designed to remain functional during and following a safe shutdown earthquake (SSE). Section 3.7 provides the design loading conditions that are considered.
- Safety-related portions of the NIDVS are protected against the effects of flooding by consideration of the following design features: redundancy, location and physical separation.
- To cope with a large flooding event, the NIDVS sump located in the lowest level of the non-controlled area of each SB is equipped with safety-related level instrumentation to automatically trip the ESWS pump and close the associated discharge isolation valve. The level setpoint that initiates ESW isolation via the NIDVS safety-related sensors is above the floor level. The safety-related sensors are provided with Class 1E power and are classified as Seismic Category I.~~To cope with a large flooding event, the NIDVS sump located in the lowest level of the non-controlled areas of each SB is equipped with redundant safety-related level instrumentation to automatically trip the ESWS pump and close the associated discharge isolation valve. This instrumentation is located above floor level, provided with Class 1E power, and is classified as Seismic Category I.~~
- To notify the MCR operator of a flooding event and to begin operator action to isolate the flooding source, the RB sumps and the FB sumps are equipped with safety-related Seismic Category I instrumentation to alarm in the MCR.

The design of safety-related portions of the NIDVS satisfies GDC 4 regarding the capability to withstand the effects of and to be compatible with the environmental conditions (e.g., flooding) associated with normal operation, maintenance, testing and postulated accidents (e.g., pipe breaks, tank ruptures).

- Safety-related portions of the NIDVS inside the RB are located at sufficient elevation to be protected from flooding events inside this building.
- Sumps inside the RB, SBs, and FB are equipped with safety-related Seismic Category I level instrumentation to mitigate the effects of internal flooding and maintain safe shutdown capability. This instrumentation provides alarms in the MCR to initiate operator action to isolate the flooding source or provides signals to automatically isolate the source.
- The NIDVS contains instrumentation that monitors the RCS leak tightness and reactor coolant inventory using leak detection and measurement means in the RB.
- The NIDVS is designed to prevent backflow of water through the drain systems into areas of the plant containing safety-related equipment by the use of check valves.
- Safety-related portions of the NIDVS are protected against the effects of internal missiles by consideration of the following design features: redundancy, location and physical separation.
- The NIDVS design considers: (1) actuation of installed fire suppression systems (e.g., gas and water), (2) accumulation of fire fighting water, and (3) prevention of backflow of combustible liquids into safety-related areas.
- Redundancy and physical separation of CIVs provide assurance that the containment isolation function is protected against fire-related events. The inner and outer CIVs are located in separate fire zones.
- The NIDVS, including floor drains and sump pumps, is assumed to be unavailable to mitigate the effects of internal flooding.

The design of the safety-related portions of the NIDVS satisfies GDC 60 concerning the suitable control of the release of radioactive materials in gaseous and liquid effluents, including AOOs.

- The NIDVS is designed to prevent the inadvertent transfer of contaminated fluids to non-contaminated drainage systems.
- Portions of the NIDVS that are located in areas that may contain radioactive effluents are physically separated from the plant areas that do not contain radioactive effluents. System design and operational controls monitor the transfer of effluents to the appropriate treatment systems.

9.3.3.4 Inspection and Testing Requirements

Safety-related portions of the NIDVS are inspected and tested as part of the initial test program. Refer to Section 14.2 (test abstract #098) for initial plant startup test program. The performance and structural integrity of system components is demonstrated by continuous operation.

9.5 Other Auxiliary Systems

9.5.1 Fire Protection ~~System~~Program

The purpose of the fire protection ~~system~~program (FPP~~S~~) is to protect other plant systems and equipment which provide the capability to safely shut down the reactor, maintain it in a safe shutdown condition, control radioactive releases to the environment, and to prevent personnel injury and property damage in the event of a fire.

The FPP~~S~~ consists of design features, personnel, equipment, and procedures to provide defense-in-depth protection of public health and safety. The program is implemented during station operations by the prevention, detection, annunciation, confinement, and extinguishment of fire. Administrative controls, training, inspection, testing, and quality assurance (QA) provide reasonable assurance of the operability of the program.

The FPP~~S~~, including administrative controls and the fire brigade, are implemented prior to receiving fuel on site for fuel storage areas and for the entire station prior to reactor startup.

9.5.1.1 Design Basis

The FPP~~S~~ is designed in accordance with:

- 10 CFR 50.48 - Fire Protection.
- 10 CFR Part 50, Appendix A, GDC 3 - Fire Protection.
- 10 CFR Part 50, Appendix A, GDC 5 - Sharing of Structures, Systems, and Components.
- 10 CFR Part 50, Appendix A, GDC 19 - Control Room.
- 10 CFR Part 50, Appendix A, GDC 23 - Protection System Failure Modes.
- 10 CFR Part 50, Appendix A, GDC 56 - Primary Containment Isolation.
- NUREG-0800, Standard Review Plan 9.5.1 - Fire Protection Program (Reference 37).
- RG 1.29 - Seismic Design Classification, Revision 4.
- RG 1.189 - Fire Protection for Nuclear Power Plants, Revision 1.

The FPP~~S~~ is designed to:

- Prevent fire initiation by controlling, separating, and limiting the quantities of combustibles and sources of ignition.

- Isolate combustible materials and limit the spread of fire by subdividing plant buildings into fire areas separated by fire barriers.
- Provide the capability to rapidly detect, control, and promptly extinguish fires that do occur.
- Provide protection for structures, systems, and components (SSC) important to safety so that a fire, not promptly extinguished, will not prevent the safe shutdown of the plant or result in the release of radioactive materials to the environment.
- Maintain one success path of SSC necessary to achieve safe shutdown conditions (i.e., cold shutdown) free of fire damage assuming all equipment in any one fire area will be rendered inoperable by fire, and post-fire re-entry for repairs or operator actions is not possible. Because of its physical configuration, the main control room (MCR) is excluded from this approach, but an independent alternative shutdown capability that is physically and electrically independent of the MCR is included in the design.
- Provide fire protection features for redundant shutdown systems in the Reactor Building (RB) that will make sure to the extent practicable that one success path of SSC necessary to achieve safe shutdown conditions (i.e., cold shutdown) is free of fire damage.
- Separate redundant trains of safety-related equipment used to mitigate the consequences of a design basis accident (but not required for safe shutdown following a fire) so that a fire within one train will not damage a redundant train.
- Prevent smoke, hot gases, or fire suppressant agents from migrating from one fire area to another to the extent they could adversely affect safe shutdown capabilities, including operator actions.
- Prevent failure or inadvertent operation of the Fire Protection System (FPS) from impairing the safety capability of SSC important to safety.
- Preclude the loss of structural support, due to warping or distortion of building structural members caused by the heat from a fire, to the extent that such a failure could adversely affect safe shutdown capabilities.
- Provide floor drains sized to remove expected firefighting water flow without flooding safety-related equipment.
- Provide firefighting personnel access and life safety escape routes for each fire area.
- Provide emergency lighting and communications to facilitate safe shutdown following a fire.
- Limit the radiological release to any unrestricted area due to the direct effects of fire suppression activities (but not involving fuel damage) to as low as reasonably achievable and to not exceed applicable regulatory limits.

- Provide backup water supply to CCWS surge tanks after seismic event (post seven days).
- Provide backup water supply to SCWS expansion tanks after seismic event (post seven days).

The FPP~~S~~ is classified as non-safety related. The fire protection containment isolation valves and associated piping are classified as safety-related and are subject to Seismic Category I design requirements per RG 1.29, Regulatory Position 1.o. The FPS portion of the containment isolation system meets the containment isolation requirements of GDC 56. The FPS water supply storage tanks, pumps, and portions of the distribution piping that provide fire protection flow to standpipes located in areas containing Seismic Category I equipment are subject to seismic design requirements per RG 1.29, Regulatory Position 2.

The portions of the FPS that provide containment isolation or water to the standpipes that protect those areas of the plant, containing Seismic Category I equipment used for safe plant shutdown, are required to remain functional during and following seismic events up to a safe shutdown earthquake. Other portions of the FPS are not required to remain functional following a plant accident or natural phenomena.

The FPS is designed to perform the following functions:

- Detect fires and provide operator indication of the location.
- Provide the capability to extinguish fires in plant areas, to protect site personnel, limit fire damage, and protect safe shutdown capabilities.
- Supply fire suppression water at a flow and pressure sufficient to meet the largest hydraulic demand of any automatic sprinkler or water spray system with an additional 500 gpm for fire hose use, for a minimum of two hours.
- Maintain 100 percent of fire pump design capacity, assuming failure of the largest fire pump or the loss of offsite power.
- Following an SSE, provide water to hose stations for manual firefighting in areas containing Seismic Category I plant safe shutdown equipment.
- Containment isolation.

The fire protection analysis (see Appendix 9A) evaluates the adequacy of fire protection for systems and plant areas.

9.5.1.2 ~~System~~Program Description

9.5.1.2.1 General Description

The FPP~~S~~ and the design of the FPS comply with applicable codes and standards.

3.3 Check capability of crane to position over required turbine building equipment.

3.4 Perform 125 percent load capacity test.

4.0 DATA REQUIRED

4.1 Hoist and trolley speeds.

4.2 Verification of that operation of interlocks is within design limits.

4.3 Load capacity data.

5.0 ACCEPTANCE CRITERIA

5.1 The turbine building crane meets manufacturers design specification.

5.1.1 Trolley, bridge, and hoist function as designed.

5.1.2 Hoist and trolley speeds are within design limits.

5.1.3 Crane is capable of being positioned over required building equipment.

5.1.4 Crane protective and safety devices function as designed.

5.1.5 Crane load tests are completed satisfactorily.

5.1.6 The turbine building crane is capable of handling the heaviest turbine building component (e.g., low pressure turbine, main generator stator)

14.2.12.5 Distributed Utilities

14.2.12.5.1 Raw Water Supply System (Test #043)

A COL applicant that references the U.S. EPR design certification will provide site-specific test abstract information for the raw water supply system. The following is a typical COLA test; if a site-specific test will be used, the COL applicant will provide the test.

1.0 OBJECTIVE

1.1 To demonstrate the ability of raw water supply system (RWSS) to supply filtered water to downstream systems (e.g., potable and sanitary water, demineralized water distribution system).

2.0 PREREQUISITES

2.1 Construction activities on the RWSS have been completed.

2.2 RWSS instrumentation has been calibrated and is functional for performance of the following test.

2.3 Support system required for operation of the RWSS is complete and functional.

2.4 Test instrumentation available and calibrated.

2.5 The RWSS intake is being maintained at the water level specified in the design documents.

2.6 The RWSS flow balance has been performed.

3.0 TEST METHOD

3.1 Verify that the RWSS pump and system flow meet design requirement (refer to Section 9.2.9).

3.2 Verify standby RWSS pump starts on low discharge pressure or a trip of the running pump.

4.0 DATA REQUIRED

4.1 Pump operating data.

4.2 Setpoints at which alarms and interlocks occur.

5.0 ACCEPTANCE CRITERIA

5.1 The RWSS operates as designed (refer to Section 9.2.9):

5.1.1 RWSS flow meets design requirements.

5.1.2 RWSS alarms, interlocks, and controls (manual and automatic) function as designed.

5.1.3 The RWSS pumps meet design requirements.

14.2.12.5.2 ~~Reserved~~ Reactor Containment Building Doors (Test #044)

1.0 OBJECTIVE

1.1 To perform testing to ensure that reactor containment building (RCB) radiation doors are capable of meeting design requirements.

1.1.1 Remote position indication is available outside of the RCB to determine if personnel can safely access the service area with standard radiation work permits.

1.1.2 Pressure relieving function (refer to Section 6.2.5).

1.1.3 Seal between the equipment compartment and the service compartment.

1.1.4 Radiation barrier between the radiation sources in the equipment compartment and the service compartment, where personnel access is allowed in MODE 1 (refer to Section 12.1).

1.2 To perform testing to ensure that RCB doors with pressure relieving panels are capable of meeting design requirements.

1.2.1 Pressure relieving function.

1.2.2 Seal between the equipment compartment and the service compartment.

1.3 To perform testing to ensure that RCB watertight doors are capable of meeting design requirements.

2.0 PREREQUISITES

2.1 Construction activities on the following have either been completed or exceptions have been recorded and the impact on the system performance has been determined.

2.1.1 RCB radiation doors.

2.1.2 RCB doors with pressure relieving panels.

2.1.3 RCB watertight doors

2.2 Test instrumentation is available and calibrated. A record of calibrated test instrumentation used with individual tracking number and calibration due date shall be recorded in the official test record.

2.3 Instrumentation, including position indication of doors, has been calibrated and is operating satisfactorily prior to performing the following test.

2.4 Verify that RCB ventilation systems are capable of operating in various normal configurations.

3.0 TEST METHOD

3.1 Observe RCB radiation door remote position indication including alarms.

3.2 Observe force required to open RCB radiation doors with shear pins disengaged.

3.2.1 Breakaway torque.

3.2.2 Required torque to continue opening each RCB radiation door.

3.3 Observe that each RCB radiation door shear pin engages and the locking mechanism prevents unauthorized entry.

3.4 Observe that each RCB radiation door opens freely without obstruction.

3.5 Observe travel distance of each RCB radiation door when fully open.

3.6 Observe seal of each RCB radiation door when the door is shut.

3.7 Observe that each RCB door with pressure relieving aperture latch engages and the locking mechanism prevents unauthorized entry.

3.8 Observe seal of each RCB door with pressure relieving aperture when the door is shut.

3.9 Observe that each RCB door with pressure relieving panel is free to open without obstruction.

3.10 Observe RCB watertight door remote position indication, including alarms.

3.11 Observe that each RCB watertight door latch engages and the locking mechanism prevents unauthorized entry.

3.12 Observe that each RCB watertight door opens freely without obstruction.

3.13 Observe seal of each RCB watertight door when the door is shut.

3.14 Operate the RCB ventilation system in various configurations while positioning the doors and verify no adverse effects.

4.0 DATA REQUIRED

4.1 Alarm log for RCB door position.

4.2 Breakaway torque to open each RCB radiation door.

4.3 Required torque to continue to open each RCB radiation door.

4.4 RCB radiation door travel distance with door fully open.

4.5 Seal condition of the following:

4.5.1 RCB radiation doors

4.5.2 RCB doors with pressure relieving panels.

4.5.3 RCB watertight doors.

5.0 ACCEPTANCE CRITERIA

5.1 Safety-related RCB radiation doors function as designed and described in Section 6.2.

5.2 Non-safety RCB radiation doors function as designed and described in Section 6.2.

5.3 Safety-related RCB doors with pressure relieving apertures function as designed and described in Section 6.2.

5.4 Non-safety RCB doors with pressure relieving apertures function as designed and described in Section 6.2.

5.5 RCB watertight doors function as designed.

14.2.12.5.3 Seal Water Supply System (Test #045)

1.0 OBJECTIVE

1.1 To demonstrate the ability of seal water supply system to supply filtered seal water under normal plant operations.

1.2 To verify that the seal water supply system provides adequate sealing water to systems containing radioactive fluids.

1.3 To verify that the seal water supply system provides adequate sealing water to the gaseous waste processing and operational chilled water system.

2.0 PREREQUISITES

2.1 Construction activities on the seal water supply system have been completed.

2.2 The seal water supply system instrumentation has been calibrated and is functional for performance of the following test.

2.3 Support system required for operation of the seal water supply system is complete and functional.

2.4 Test instrumentation available and calibrated.

2.5 The seal water supply system suction supply is being maintained at the water level (pressure) specified in the design documents.

2.6 The seal water supply system flow balance has been performed.

3.0 TEST METHOD

3.1 Verify seal water supply system pump and system flow meet design specifications.

3.2 Verify standby seal water supply system pump starts on low discharge pressure or a trip of the running pump.

3.3 Verify that the seal water supply system provides designed rated flow to systems that are supplied by the seal water header.

3.4 Operate control valves remotely while:

a. Observing each valve operation and position indication.

b. Measuring valve performance data (e.g., thrust, opening and closing times).

3.5 Observe response of power-operated valves upon loss of motive power (refer to Section 9.2.7 for anticipated response).

3.6 Verify that operation of protective devices, controls, interlocks, instrumentation, and alarms meets design requirements.

3.7 Verify that the seal water supply system can meet the following maximum design requirements:

a. The seal water supply system pressure.

b. The seal water supply system temperature.

3.8 Verify proper operation of the seal water supply system buffer tank upon a simulated loss of offsite power (LOOP).

4.0 DATA REQUIRED

4.1 Pump operating data.

4.2 Setpoints at which alarms and interlocks occur.

4.3 Valve performance data, where required.

4.4 Valve position indication.

4.5 Position response of valves to loss of motive power.

5.0 ACCEPTANCE CRITERIA

5.1 The seal water supply system meets design requirements (refer to Section 9.2.7):

5.1.1 Seal water supply system pump and system flow meet design specifications.

5.1.2 Standby seal water supply system pump starts on low discharge pressure or a trip of the running pump.

5.1.3 Seal water supply system provides designed rated flow to systems that are supplied by the seal water header.

5.1.4 System valves perform within design limits.

14.2.12.5.4 Potable and Sanitary Water Systems (Test #225)

1.0 OBJECTIVE

1.1 To demonstrate the ability of potable water system to supply potable water under normal plant operations.

1.2 To demonstrate the ability of sanitary water system to supply sanitary water under normal plant operations.

2.0 PREREQUISITES

2.1 Construction activities on the potable and sanitary water systems have been completed.

2.2 Potable and sanitary water systems instrumentation has been calibrated and is functional for performance of the following test.

2.3 Support system required for operation of the potable and sanitary water systems are complete and functional.

2.4 Test instrumentation available and calibrated.

2.5 The potable and sanitary water systems suction supplies are being maintained at the water level (pressure) specified in the design documents.

3.0 TEST METHOD

3.1 Verify potable and sanitary water systems measured pump and system flow meet design specifications.

3.2 Verify that potable and sanitary water systems interlocks and protective features perform as designed.

4.0 DATA REQUIRED

4.1 Pump operating data.

4.2 Setpoints at which alarms and interlocks occur.

5.0 ACCEPTANCE CRITERIA

5.1 The potable and sanitary water systems meet design requirements (refer to Section 9.2.4):

5.1.1 System flow is within design limits.

5.1.2 Supplied water meets design requirements.

14.2.12.5.5 Component Cooling Water System (Test #046)

1.0 OBJECTIVE

1.1 To demonstrate the capability of the CCWS to provide treated cooling water under the following conditions:

1.1.1 Normal unit operation.

1.1.2 During unit cooldown.

- Simulate a significant heat load on the CCW system and downstream systems (essential service water and ultimate heat sink) during hot functional testing.

1.1.3 During refueling.

1.1.4 During an emergency situation.

1.2 To demonstrate that system response to a simulated ESF actuation signal is as designed.

1.3 To demonstrate electrical independence and redundancy of safety-related power supplies.

1.4 To demonstrate the ability of the CCWS in conjunction with the RHR system, ESW system, and the UHS to perform a plant cooldown during hot functional testing. Testing will be performed on each safety-related cooling chain train.

1.5 To demonstrate the CCWS is adequately designed and constructed to prevent water hammer.

2.0 PREREQUISITES

2.1 Construction activities on the CCWS have been completed.

2.2 CCWS instrumentation has been calibrated and is functional for performance of the following test.

2.3 Test instrumentation is available and calibrated.

2.4 Plant systems required to support testing are functional, or temporary systems are installed and functional.

2.5 Hot functional testing is in process for those sections that measure thermal-hydraulic performance.

2.6 Performance curves are available for the following components:

2.6.1 RHR heat exchanger.

2.6.2 CCW heat exchanger.

2.6.3 Ultimate heat sink tower.

2.7 A thermal hydraulic model of the safety-related cooling chain (RHR, CCW, ESW, and UHS) is available to analyze data from the cooldown. The data will have to be extrapolated to design conditions in order to determine system performance.

2.8 CCW system has been properly filled and vented.

2.9 LHSI system has been properly filled and vented.

2.10 ESW system has been properly filled and vented.

2.11 UHS basin is at normal level.

2.12 Outside weather conditions are suitable for performing this test.

3.0 TEST METHOD

3.1 Demonstrate that operation of the surge tanks and their controls is within design limits.

3.2 Demonstrate that system and component flow paths, flow rates, and pressure drops including head versus flow verification for the CCW pumps is within design limits.

3.2.1 Verify that pump starts/stops, valve realignments resulting from automatic switchover, RCP thermal barrier transfer, automatic valve closures and pump trips occur without introducing~~Observe the system during operation for~~ the following water hammer indications:

- Noise.
- Pipe movement.
- Pipe support or restraint damage.
- Leakage.
- Damaged valves or equipment.
- Pressure spikes or waves.

3.3 Perform a pump head versus flow verification for CCW pumps.

3.3.1 $NPSH_a \geq NPSH_R$.

3.3.2 Starting time (motor start time and time to reach rated flow).

3.4 Verify the stroke closure time of the CCWS switchover valves.

3.5 Verify that the start of a CCWS pump generates a starting of the corresponding ESWS train.

3.6 Operate control valves remotely while:

a. Observing each valve operation and position indication.

b. Measuring valve performance data (e.g., thrust, opening and closing times).

3.7 Observe response of power-operated valves upon loss of motive power (refer to Section 9.2.2 for anticipated response).

3.8 Verify alarms, interlocks, indicating instruments, and status lights are functional.

3.9 Verify pump control from the PICS.

3.10 Demonstrate the ability of the CCWS in conjunction with the RHRS and essential service water system to perform a plant cooldown during HFT.

3.11 Verify that the RCP thermal barriers can be supplied by either the 1.b or 2.b common header. Demonstrate that the supply can be realigned with the RCPs operating during HFT.

3.12 Verify that the fire protection makeup to the CCW surge tank meets design flow rates.

3.13 Check electrical independence and redundancy of power supplies for safety-related functions by selectively removing power and determining loss of function.

3.14 Verify that CCWS Train 1 is supplying the common 1.b header (main common user group), then perform test of CCWS common 1.b ~~Emergency~~Automatic Backup Switchover function.

3.14.1 Initiate a failure of CCWS Train 1 by simulating a signal for CCWS Train 1 discharge pressure less than or equal to MIN1. Verify the following actions occur:

- CCWS Train 1 common 1.b supply and return switchover valves close.
- CCWS Train 1 LHSI heat exchanger isolation valve opens.
- CCWS Train 2 common 1.b supply and return switchover valves open.
- CCWS Train 2 pump starts.
- RCP thermal barrier flow returns to normal.

3.14.2 Initiate a failure of CCWS Train 1 by simulating a signal for loss of ESWS Train 1. Verify the following actions occur:

- CCWS Train 1 common 1.b supply and return switchover valves close.
- CCWS Train 1 LHSI heat exchanger isolation valve opens.
- CCWS Train 2 common 1.b supply and return switchover valves open.
- CCWS Train 2 pump starts.
- RCP thermal barrier flow returns to normal.

3.14.3 Initiate a failure of CCWS Train 1 by simulating a signal for main train (flow through CCW pump and heat exchanger, with or without flow through common headers) flow rate less than or equal to MIN1. Verify the following actions occur:

- CCWS Train 1 common 1.b supply and return switchover valves close.
- CCWS Train 1 LHSI heat exchanger isolation valve opens.
- CCWS Train 2 common 1.b supply and return switchover valves open.
- CCWS Train 2 pump starts.
- RCP thermal barrier flow returns to normal.

3.15 Perform step 3.14 for CCWS Trains 2, 3, and 4 to verify appropriate responses.

3.16 Verify that CCWS Train 1 is supplying the common 1.b header (main common user group), then perform test of CCWS Emergency Temperature Control function by simulating two out of three Train 1 temperature sensors greater than MAX1. Verify the following action occurs:

- CCWS Train 1 heat exchanger bypass valve closes until MAX1 is cleared (or the valve is fully closed).

3.17 Perform step 3.16 for CCWS Trains 2, 3, and 4 to verify appropriate responses.

3.18 Verify that CCWS Train 1 is supplying the common 1.b header (main common user group), then perform test of CCWS Emergency Leak Detection function.

3.18.1 Simulate a CCWS Train 1 surge tank level signal less than or equal to MIN2 and simulate a flow mismatch between the inlet and outlet of the common 1.b header (~~main common user group~~non-safety related branches). Verify the following actions occur:

- KAB80 AA015/016/019~~CCWS common 1.b non-safety users isolation~~ valves close.
- Normal and Automatic Switchover functions are inhibited~~CCWS common 1.b supply outer RB isolation valve closes~~.

3.18.2 Simulate a CCWS Train 1 surge tank level signal less than or equal to MIN3. Verify the following actions occur:

- CCWS Train 1 common 1.a supply and return switchover valves close.
- CCWS Train 1 common 1.b supply and return switchover valves close.

3.18.3 Simulate a CCWS Train 1 surge tank level signal less than or equal to MIN4. Verify the following actions occur:

- DWDS supply isolation valve closes.
- CCWS common 1.b Automatic~~Emergency~~ Backup Switchover function is enabled.

- CCWS Train 1 pump trips and CCWS Train 2 pump automatically starts~~CCWS Emergency Temperature Control function is enabled~~.

3.19 Perform step 3.18 for CCWS Trains 2, 3, and 4 to verify appropriate responses. For common 2.b testing with Trains 3 and 4 valves KAB50 AA001/004/006 close.

3.20 Verify that CCWS Train 1 is supplying the common 1.b header (main common user group), then perform test of CCWS Actuation from Safety Injection function by simulating a safety injection signal to CCWS. Verify the following actions occur:

- CCWS Train 1/2/3/4 pumps start automatically (if not previously running).
- CCWS Train 1/2/3/4 LHSI heat exchanger isolation valves KAA12/22/32/42 AA005 open.
- Isolation valves for non-safety-related users outside the Reactor Building (KAB50 AA001/004/006 and KAB80 AA015/016/019) close~~CCWS common 2 non-safety users supply isolation valve closes~~.
- LHSI pump seal cooler isolation valves (KAA22/32 AA013) open~~CCWS common 2 non-safety users upstream and downstream isolation valves close~~.
- ~~CCWS common 1.b NAB non-safety users isolation valves close.~~

3.21 Perform step 3.20 for CCWS Trains 2, 3 and 4 to verify appropriate responses.

3.22 Verify that CCWS Train 1 is supplying the common 1.b header (main common user group), then perform test of CCWS Operation from Stage 1 Containment Isolation signal and CCWS Operation from Stage 2 Containment Isolation signal functions.

3.22.1 Simulate a containment stage 1 isolation signal to CCWS. Verify the following actions occur:

- CCWS containment isolation valves KAB40 AA001/006/012 close~~CCWS common 1 supply outer containment isolation valve closes.~~
- ~~CCWS common 1 return inner and outer containment isolation valves close.~~

3.22.2 Simulate a containment stage 2 isolation signal to CCWS. Verify the following actions occur:

- CCWS containment isolation valves KAB60/70 AA013/018/019 close~~CCWS common 1 safety users supply outer containment isolation valve closes~~.
- ~~CCWS common 1 safety users return inner and outer containment isolation valves close.~~
- ~~CCWS common 2 safety users supply outer containment isolation valve closes.~~

- ~~CCWS common 2 safety users return inner and outer containment isolation valves close.~~

3.23 Perform step 3.22 for CCWS Trains 2, 3, and 4 to verify appropriate responses.

3.24 Verify that CCWS Train 1 is supplying the common 1.a header (fuel pool cooling and safety injection loads) and the common 1.b header (main common user group) then perform test of CCWS Response to a LOOP function by simulating a loss of offsite power to CCWS. Verify the following actions occur:

- ~~CCWS common 2 safety users return inner and outer containment isolation valves close.~~
- CCWS Train 1 starts upon receipt of a Protection System signal.

3.25 Perform step 3.24 for CCWS Trains 2, 3, and 4 to verify appropriate responses.

3.26 Verify that CCWS Train 1 is supplying the common 1.a header (fuel pool cooling and safety injection loads) and the common 1.b header (main common user group) then perform test of CCWS Switchover Valve Interlock function. Verify the following groupings of valves cannot be simultaneously opened to prohibit more than one train from being connected to a common header:

- KAA10 AA033/032 with KAA20 AA033/32.~~CCWS Train 1 common 1.a switchover valves with Train 2 common 1.a switchover valves~~
- KAA30 AA033/032 with KAA40 AA033/32.~~CCWS Train 3 common 2.a switchover valves with Train 4 common 2.a switchover valves~~
- KAA10 AA006/010 with KAA20 AA006/010.~~CCWS Train 1 common 1.b switchover valves with Train 2 common 1.b switchover valves~~
- KAA30 AA006/010 with KAA40 AA006/010.~~CCWS Train 3 common 2.b switchover valves with Train 4 common 2.b switchover valves~~

3.27 Verify that CCWS Train 1 or 2 is supplying the common 1.b header (main common user group), then perform test of CCWS RCP Thermal Barrier Containment Isolation Valve Interlock function. Verify the following action occurs:

- One of the two supply valves (KAB30 AA049/050) and one of the two return valves (KAB30 AA051/052) must be closed prior to opening KAB30 AA053/054/055/056 and vice versa~~CCWS common Train 1.b and 2.b can not be placed into service at the same time~~.

3.28 Perform step 3.27 for CCWS Train 3 or 4 supplying common 2.b header to verify appropriate responses.

3.29 Verify that CCWS Train 1 is supplying the common 1.b header (main common user group), then perform test of CCWS Switchover Valve Leakage or Failure function by simulating CCWS Train 1 surge tank level less than MIN3 and CCWS surge tank 2 level greater than MAX2. Verify the following actions occur:

- CCWS Train 1 common 1.a supply and return switchover valves close.
- CCWS Train 1 common 1.b supply and return switchover valves close.

3.30 Perform step 3.29 for CCWS Train 2 supplying common 2.b header to verify appropriate responses.

3.31 Verify that CCWS Train 1 is supplying the common 1.b header (main common user group), then perform test of CCWS Surge Tank Makeup function. Verify the following action occurs:

- DWDS supply isolation valve responds to CCWS surge tank level changes.

3.32 Perform step 3.31 for CCWS Trains 2, 3, and 4 to verify appropriate responses.

3.33 Verify that CCWS Train 1 is supplying the common 1.b header (main common user group), then perform test of CCWS Temperature Control function.

3.33.1 Simulate two of three CCWS Train 1 temperature sensors less than MIN1. Verify that the Train 1 heat exchanger bypass valve opens by 10 percent of its 0-100 percent range at 1 minute intervals until 2 of 3 temperature measurements are greater than MIN1, or the valve is fully open.

3.33.2 Simulate two out of three CCWS Train 1 temperature sensors greater than MAX1. Verify that the Train 1 heat exchanger bypass valve closes by 10 percent of its 0-100 percent range at 1 minute intervals until 2 of 3 temperature measurements are less than MAX1, or the valve is fully closed.

3.34 Perform step 3.33 for CCWS Trains 2, 3, and 4 to verify appropriate responses~~Perform Steps 3.14 through 3.24 for CCWS Trains 2, 3, and 4 to verify appropriate responses~~.

3.35 Verify that CCWS common 1.b header is supplying RCP thermal barrier cooling, then perform test of RCP thermal barrier isolation function.

3.35.1 Simulate high flow above threshold value on the return of RCP1 thermal barrier. Verify that RCP1 thermal barrier isolation valves close.

3.35.2 Simulate high pressure above threshold value on the return of RCP1 thermal barrier. Verify that RCP1 thermal barrier isolation valves close.

3.35.3 Perform steps 3.35.1 and 3.35.2 for RCP 2, 3, and 4 thermal barriers.

3.36 Perform step 3.35 for common 2.b header supplying RCP thermal barrier cooling to verify appropriate responses.

3.37 Verify that CCWS common 1.b header is supplying RCP thermal barrier cooling, then perform test of thermal barrier transfer revert back feature.

3.37.1 Simulate closure of common 1.b RCP thermal barrier CIVs and failure of one or more common 2.b RCP thermal barrier CIVs to open. Verify that RCP thermal barrier transfer reverts back to common 1.b supplying cooling flow to each of the four RCP thermal barriers.

3.38 Verify that CCWS common 2.b header is supplying RCP thermal barrier cooling, then perform test of thermal barrier transfer revert back feature.

3.38.1 Simulate closure of common 2.b RCP thermal barrier CIVs and failure of one or more common 1.b RCP thermal barrier CIVs to open. Verify that RCP thermal barrier transfer reverts back to common 2.b supplying cooling flow to each of the four RCP thermal barriers.

3.39 Make sure that all available loads are placed on the safety-related cooling chain train that is to be tested.

3.40 Perform a cooldown test of the safety-related cooling chain by placing the RHR system into service at the upper limit of operation.

3.41 Perform a cooldown test while operating all four RCPs and minimizing steam generator cooling.

3.42 Make sure UHS makeup water flow and blowdown flows are isolated.

3.43 Collect the following cooldown data:

3.43.1 RHR heat exchanger.

- RHR flow through the heat exchanger.
- CCW flow through the heat exchanger.
- Inlet and outlet RHR temperature.
- Inlet and outlet CCW temperature on the RHR heat exchanger.
- RHR pressure.
- CCW pressure.

3.43.2 CCW heat exchanger.

- CCW flow through the heat exchanger.
- ESW flow through the heat exchanger.
- Inlet and outlet CCW temperature.
- Inlet and outlet ESW temperature on the CCW heat exchanger.

- CCW pressure.
- ESW pressure.

3.43.3 UHS performance data.

3.44 Analyze the cooldown data using the thermal-hydraulic model at multiple operating points.

3.45 Perform steps 3.39 through 3.44 for each cooling train.

4.0 DATA REQUIRED

4.1 Record pump head versus flow and operating data for each pump.

4.2 Flow balancing data including flow to each component and throttle valve positions.

4.3 Setpoints of alarms interlocks and controls.

4.4 Valve performance data, where required.

4.5 Valve position indication.

4.6 Position response of valves to loss of motive power.

4.7 ~~Temperature~~ Thermal hydraulic performance data during cooldown.

4.8 Response of CCW System to SIAS, CIAS, surge tank level signal, and CCW header differential flow signal.

4.9 RHR, CCW, ESW, and UHS thermal-hydraulic performance data.

5.0 ACCEPTANCE CRITERIA

5.1 The CCWS meets design requirements (refer to Section 9.2.2):

5.1.1 Operation of the surge tanks and their controls is within design limits.

5.1.2 System and component flow paths, flow rates, and pressure drops including head versus flow verification for the CCW pumps is within design limits.

5.1.3 Pump head versus flow verification for CCW pumps is within design limits.

5.1.4 Response to safety-related simulated signals meets design requirements.

5.1.5 Non-safety-related headers and RCP headers are isolated on simulated signals.

5.1.6 System valves meet design requirements.

5.1.7 Alarms, interlocks, indicating instruments, and status lights meet design requirements.

5.1.8 Verify pump control from the PICS.

5.1.9 Verify the ability of the CCWS in conjunction with the RHRS, ESWS, and UHS to perform a plant cooldown during hot functional testing.

- Using performance data from the cooldown, determine that the RHR heat exchanger meets design requirements.
- Using performance data from the cooldown, determine that the CCW heat exchanger meets design requirements.
- A report exists and concludes that the ESWS-UHS has the capacity to remove the total Max Heat Load from the CCWS, EDG heat exchangers, the ESWPBVS room cooler, and the ESW pump mechanical work.

5.1.10 Verify the ability of the CCWS in conjunction with the RHRS, ~~and~~ essential service water system (ESWS), and ultimate heat sink (UHS) to perform a plant cooldown during HFT.

5.1.11 Verify none of the following water hammer indications are present for all operational tests (3.14 through 3.36):

- Noise.
- Pipe movement.
- Pipe support or restraint damage.
- Leakage.
- Damaged valves or equipment.
- Pressure spikes or waves.

5.2 Verify that safety-related components meet electrical independence and redundancy requirements.

14.2.12.5.6 Reserved (Test #047)

14.2.12.5.7 Essential Service Water System (Test #048)

1.0 OBJECTIVE

1.1 To demonstrate the ability of the ESWS to supply cooling water as designed under normal and emergency conditions, where the emergency includes postaccident system realignments, if applicable.

1.2 To demonstrate the ability of the ESWS to provide cooling water to the CCWS dedicated heat exchanger in beyond design basis conditions.

1.3 To demonstrate the ability of the ESWS to provide cooling water to the essential service water pump building ventilation system (ESWPBVS).

1.4 To demonstrate electrical independence and redundancy of power supplies.

2.0 PREREQUISITES

2.1 Construction activities on the ESWS are complete and the system is functional.

2.2 ESWS instrumentation has been calibrated and is functional for performance of the following test.

2.3 Test instrumentation available and calibrated per applicable procedures.

2.4 CCWS available to provide a heat load.

2.5 Appropriate AC and DC power sources are available.

2.6 Support systems required for operation of the ESWS are complete and functional.

2.7 The Ultimate Heat Sink (UHS) is available and functional.

2.8 The UHS basin is filled to normal level.

2.9 The UHS basin support systems required for operation of the ESWS and UHS are available, as required.

3.0 TEST METHOD

3.1 Demonstrate that the ESWS can be operated from the PICS.

3.2 Demonstrate that the ESWS starts automatically in response to a Protection signal and applicable realignments are performed in a satisfactory manner.

3.3 Verify that the ESWS pumps supply cooling water at the rated flow and design conditions.

3.4 Verify ESWS water flow is supplied to components at required flow rates, ~~and~~ developed head, and maximum particle size.

3.5 Verify alarms, interlocks, indicating instruments, and status lights are functional.

3.6 Verify head versus flow characteristics for the ESWS water pump.

3.6.1 $NPSH_a \geq NPSH_R$.

3.6.2 Discharge head.

3.6.3 Flow corresponding to head at each point.

3.6.4 Starting time (motor start time and time to reach rated flow.

3.7 Record valve performance data, where required.

3.8 Verify and record valve position indication.

3.9 Record position response of valves to loss of motive power.

3.10 Verify system baseline performance during HFT (with RHRS in service).

3.11 Check electrical independence and redundancy of power supplies for safety-related functions by selectively removing power and determining loss of function.

3.12 Verify filter backwash operation at simulated or actual high filter differential pressure.

3.13 Verify adequate $NPSH_a$ for the ESW pump ($NPSH_a > NPSH_R$.

3.14 Verify ESW/CCW response (simulated or actual) to inadvertent isolation of the operating ESW pump's discharge valve meets design requirements.

3.15 The normal and emergency ESW system realignments (valve realignments, pump starts/stops, filter backwashes, operation of vacuum breaker valves, etc.) occur and do not indicate evidence of a water hammer under the most limiting conditions.

3.16 Verify operation of the CCWS switchover sequence meets design requirements.

4.0 DATA REQUIRED

4.1 Record flows as required to components and throttle valve positions.

4.2 Record alarm, interlocks, and control setpoints.

4.3 Record pump head versus flow and operating data.

4.4 System operating parameters during HFT.

4.5 Verify flow to the CCW heat exchangers using the ESW pump in the normal system alignment.

4.6 Verify flow to the CCWS dedicated heat exchanger using the dedicated ESW pump.

4.7 Valve position upon loss of motive power and valve position indication data.

4.8 Verify flow to the EDG heat exchangers using the ESW pump in the normal system alignment.

4.9 Verify flow to the ESW/PBVS room cooler using the ESW pump in the normal system alignment.

5.0 ACCEPTANCE CRITERIA

5.1 The ESWS meets design requirements (refer to Section 9.2.1):

5.1.1 Verify that each ESWS can be operated from the PICS.

5.1.2 Verify that each ESWS starts automatically in response to a Protection signal.

5.1.3 Verify that the ESWS pumps supply cooling water at the rated flow and design conditions.

5.1.4 Verify ESWS water flow supplied to components.

5.1.5 Verify alarms, interlocks, indicating instruments, and status lights perform as designed.

5.1.6 Verify head versus flow characteristics for the ESWS water pumps meets design requirements.

5.1.7 Verify that system valves meet design requirements (i.e., thrust, ability to initiate and terminate ESW system flow and do not indicate evidence of a water hammer).

5.1.8 Verify system baseline performance during HFT (with RHRS in service).

5.1.9 Verify filter backwash operation in response to high filter differential pressure.

5.1.10 Verify that ESW system vacuum breaker/air release devices perform as designed and do not indicate evidence of a water hammer in the ESW system.

5.1.11 Verify that ESW system pumps perform as designed (reach rated flow within the allotted time and do not indicate evidence of a water hammer when flow is initiated or terminated).

5.1.12 Verify that the ESW system debris filters function as designed (perform manual and automatic backwash, filter alarms and automatic actions, particle size acceptance criteria, etc.)

5.2 Verify that safety-related components meet electrical independence and redundancy requirements.

14.2.12.5.8 Ultimate Heat Sink (Test #049)

1.0 OBJECTIVE

1.1 To demonstrate that the UHS is maintained by its associated support systems.

1.2 To demonstrate electrical independence and redundancy of power supplies.

1.3 Demonstrate proper operation of the UHS, excluding heat removal capacity.

2.0 PREREQUISITES

2.1 Construction activities on the UHS have been completed and the UHS is available and functional.

2.2 UHS makeup source available, as required.

2.3 UHS blowdown path available, as required.

2.4 The UHS system instrumentation has been calibrated and is functional for performance of the following test.

2.5 Test instrumentation available and calibrated per applicable procedures.

2.6 Appropriate AC and DC power sources are available.

2.7 UHS basin support systems required for operation of the UHS and ESWS are available, as required.

2.8 The UHS basin is filled to normal operating levels.

3.0 TEST METHOD

3.1 Demonstrate operation of the UHS tower over the design range of operation.

3.1.1 Simulate a UHS operating temperature that corresponds to the lower range of operation.

3.1.2 Demonstrate that fans operate in each speed setting and direction, including reverse~~the reverse direction~~.

3.1.3 Demonstrate that tower bypass paths realign to mitigate ice formation.

3.1.4 Simulate a gradual increase in ambient UHS temperature and terminate the ambient temperature increase at the upper end of the design operation band.

3.1.5 Record changes to tower fans and critical component operation during temperature increase.

3.1.6 Verify that the UHS tower is operating with cooling load.

3.1.7 Verify that each UHS fan is operating in high speed (forward direction) and record performance data in the following sequence:

- Corresponding UHS inlet and outlet temperatures (°F).
- Essential service water flow rates (gpm).
- UHS air flow rates (cfm).
- Duration of described event (seconds).

3.1.8 Record data from initiation of deicing sequence until fan coasts to stop.

3.1.9 Record data from fan coasting until fan starts moving in reverse direction.

3.1.10 Record data from fan starting in reverse direction until fan is operating at normal speed in reverse direction.

3.1.11 Record data from fan speed stabilizing in reverse direction until fan can be returned to normal forward direction. Observe all applicable starting duty restrictions before returning fan to forward direction.

3.1.12 Record data from terminating deicing sequence until fan coasts to a stop.

3.1.13 Record data from fan stop until fan starts moving in forward direction.

3.1.14 Record data from fan starting in forward direction until fan is operating at high speed in the forward direction.

3.2 Perform valve performance tests (e.g., valve position response of valves to loss of motive power, thrust, stroke time).

3.3 Demonstrate that UHS makeup flow rate meets design flow requirements.

3.3.1 During normal operation.

3.3.2 During emergency operation.

3.4 Demonstrate that UHS blowdown flow rate meets design flow requirements.

3.4.1 During normal operation.

3.4.2 During emergency operation.

3.5 Demonstrate the operation of UHS level and temperature instruments and alarms.

3.6 Check electrical independence and redundancy of power supplies for safety-related functions by selectively removing power and determining loss of function.

3.7 Demonstrate that the chemical treatment system functions as designed.

3.7.1 Injection flow rate to UHS.

3.7.2 Interlocks with UHS blowdown.

3.8 Demonstrates that the UHS starts automatically in response to a protection signal and applicable realignments are performed in a satisfactory manner.

4.0 DATA REQUIRED

4.1 UHS makeup and blowdown flow rates.

4.2 Valve performance data, where required.

4.3 Valve position indication.

4.4 Temperature and relative humidity trend data.

4.5 Setpoints at which alarms and interlocks occur.

4.6 Cooling fan air flow rates.

5.0 ACCEPTANCE CRITERIA

5.1 The UHS meets design requirements (refer to Section 9.2.5):

5.1.1 Verify that control logic starts forced draft fans and aligns critical components for UHS operation for the entire design range.

5.1.2 Verify that valve performance tests (e.g., valve position response of valves to loss of motive power, thrust, stroke time) meet design requirements.

5.1.3 Verify that UHS makeup flow rate meets design flow requirements.

5.1.4 Verify that UHS blowdown flow rate meets design flow requirements.

5.1.5 Verify that the operation of UHS level and temperature instruments and alarms meet design requirements.

5.1.6 Verify that the UHS tower bypass function meets design requirements.

5.1.7 Verify that the chemical treatment system meets design requirements.

5.2 Verify that safety-related components meet electrical independence and redundancy requirements.

14.2.12.5.9 Reserved (Test #050)

14.2.12.6 General Supply Systems

14.2.12.6.1 Reserved (Test #051)

14.2.12.6.2 Safety Chilled Water System (Test #052)

1.0 OBJECTIVE

1.1 To demonstrate proper operation of the safety chilled water system (SCWS).

1.2 To demonstrate electrical independence and redundancy of power supplies.

1.3 To demonstrate proper operation of safety chilled water pumps in single and parallel operation.

2.0 PREREQUISITES

2.1 Construction activities on the SCWS have been completed.

2.2 SCWS instrumentation has been calibrated and is functional for performance of the following test.

2.3 Test instrumentation available and calibrated per applicable procedures.

2.4 The flow instrumentation downstream of each SCWS pump is functional.

2.5 The CCWS is available for chiller operation, where necessary.

2.6 Appropriate AC and DC power sources are available.

2.7 Interfacing system loads are connected and available.

2.8 SCWS support systems (makeup, nitrogen) are available.

2.9 SCWS has been filled and pressurized.

3.0 TEST METHOD

3.1 Verify pump performance characteristics (e.g., head versus flow, motor current) for the SCWS pumps.

3.7 PLANT SYSTEMS

3.7.7 Component Cooling Water (CCW) System

LCO 3.7.7 Four CCW trains shall be OPERABLE.

APPLICABILITY: MODES 1, 2, 3, and 4.

ACTIONS

----------NOTE----------
Enter applicable Conditions and Required Actions of LCO 3.4.6, "RCS Loops - MODE 4," for residual heat removal loops made inoperable by CCW System.

CONDITION	REQUIRED ACTION		COMPLETION TIME
A. One CCW train inoperable.	A.1	----------NOTE---------- Required Action A.1 is not applicable if CCW trains are inoperable in both CCW headers supplying the reactor coolant pump (RCP) thermal barrier cooling common loop and Condition B is entered. ---------- Align RCP thermal barrier cooling common loop to the CCW header with two OPERABLE CCW trains.	72 hours
	<u>AND</u>		
	A.2	Restore CCW train to OPERABLE status.	120 days
B. Two CCW trains inoperable.	B.1	Restore one CCW train to OPERABLE status.	72 hours

ACTIONS (continued)

CONDITION	REQUIRED ACTION	COMPLETION TIME
C. Required Action and associated Completion Time not met.	C.1 Be in MODE 3. AND C.2 Be in MODE 5.	6 hours 36 hours

SURVEILLANCE REQUIREMENTS

SURVEILLANCE		FREQUENCY
SR 3.7.7.1	----------NOTE---------- Isolation of CCW flow to individual components, other than the RCP thermal barrier cooling common loop, does not render the CCW System inoperable. ---------- Verify each CCW manual, power operated, and automatic valve in the flow path servicing safety related equipment, that is not locked, sealed, or otherwise secured in position, is in the correct position.	31 days
SR 3.7.7.2	Verify train leakage for each CCW train less than 4 gallons per hour.	31 days
SR 3.7.7.~~2~~3	Verify each CCW automatic valve in the flow path that is not locked, sealed, or otherwise secured in position, actuates to the correct position on an actual or simulated actuation signal.	24 months
SR 3.7.7.~~3~~4	Verify each CCW pump starts automatically on an actual or simulated actuation signal.	24 months

3.7 PLANT SYSTEMS

3.7.8 Essential Service Water (ESW) System

LCO 3.7.8 Four ESW trains shall be OPERABLE.

APPLICABILITY: MODES 1, 2, 3, and 4.

ACTIONS

----------NOTES----------

1. Enter applicable Conditions and Required Actions of LCO 3.8.1, "AC Sources - Operating," for emergency diesel generators made inoperable by ESW System.

2. Enter applicable Conditions and Required Actions of LCO 3.4.6, "RCS Loop - MODE 4," for residual heat removal loops made inoperable by ESW System.

CONDITION	REQUIRED ACTION	COMPLETION TIME
A. One ESW train inoperable.	A.1 Restore ESW train to OPERABLE status.	120 days
B. Two ESW trains inoperable.	B.1 Restore one ESW train to OPERABLE status.	72 hours
C. Required Action and associated Completion Time not met.	C.1 Be in MODE 3. AND C.2 Be in MODE 5.	6 hours 36 hours

SURVEILLANCE REQUIREMENTS

SURVEILLANCE		FREQUENCY
SR 3.7.8.1	----------NOTE---------- Isolation of ESW flow to individual components does not render the ESW System inoperable. ---------- Verify each ESW manual, power operated, and automatic valve in the flow path servicing safety related equipment, that is not locked, sealed, or otherwise secured in position, is in the correct position.	31 days
SR 3.7.8.2	Verify each ESW automatic valve in the flow path that is not locked, sealed, or otherwise secured in position, actuates to the correct position on an actual or simulated actuation signal.	24 months
SR 3.7.8.3	Verify each ESW pump starts automatically on an actual or simulated actuation signal.	24 months

3.7 PLANT SYSTEMS

3.7.9 Safety Chilled Water (SCW) System

LCO 3.7.9 Four SCW trains shall be OPERABLE~~ and in operation~~.

APPLICABILITY: MODES 1, 2, 3, and 4.

ACTIONS

CONDITION	REQUIRED ACTION	COMPLETION TIME
A. One SCW train inoperable.	A.1 Restore SCW train to OPERABLE status.	30 days
B. Required Action and associated Completion Time not met.	C.1 Be in MODE 3. AND C.2 Be in MODE 5.	6 hours 36 hours

SURVEILLANCE REQUIREMENTS

SURVEILLANCE		FREQUENCY
SR 3.7.9.1	----------NOTE---------- Isolation of SCW flow to individual components does not render the SCW System inoperable. ---------- Verify each SCW manual, power operated, and automatic valve in the flow path servicing safety related equipment, that is not locked, sealed, or otherwise secured in position, is in the correct position.	31 days
SR 3.7.9.2	Verify each SCW train has the capability to remove the design heat load.	24 months
SR 3.7.9.~~2~~3	Verify, on an actual or simulated loss of offsite power signal, each SCW train restarts following re-energization of the associated AC electrical power division.	24 months
SR 3.7.9.4	Verify train leakage for each SCW train less than 0.5 gallons per hour.	24 months

3.7 PLANT SYSTEMS

3.7.19 Ultimate Heat Sink (UHS)

LCO 3.7.19 Four UHS trains shall be OPERABLE.

APPLICABILITY: MODES 1, 2, 3, and 4.

ACTIONS

CONDITION	REQUIRED ACTION		COMPLETION TIME
A. One UHS cooling tower inoperable.	A.1	Restore UHS cooling tower to OPERABLE status.	120 days
B. Two UHS cooling towers inoperable.	B.1	Restore one UHS cooling tower to OPERABLE status.	72 hours
C. Required Action and associated Completion Time not met.	C.1	Be in MODE 3.	6 hours
	AND		
	C.2	Be in MODE 5.	36 hours

SURVEILLANCE REQUIREMENTS

----------REVIEWER'S NOTE----------
A surveillance to verify the ability to supply emergency makeup water to each UHS cooling tower basin at ≥ 300 gpm will be provided by the COL applicant.

SURVEILLANCE		FREQUENCY
SR 3.7.19.1	Verify water level of each UHS cooling tower basin is ≥ 23.75 feet.	24 hours
SR 3.7.19.2	Verify water temperature of each UHS cooling tower basin is ≤ 90°F.	24 hours
SR 3.7.19.3	Operate each UHS cooling tower fan for ≥ 15 minutes in each speed setting and direction, including reverse.	31 days
SR 3.7.19.4	Verify each UHS cooling tower fan starts automatically on an actual or simulated actuation signal.	24 months
~~SR 3.7.19.5~~	~~Verify the ability to supply makeup water to each UHS cooling tower basin at ≥ 300 gpm.~~	~~24 months~~
SR 3.7.19.~~6~~5	Verify each UHS automatic valve in the flow path that is not locked, sealed, or otherwise secured in position, actuates to the correct position on an actual or simulated actuation signal.	24 months
[SR 3.7.19.6	Verify the ability to supply emergency makeup water to each UHS cooling tower basin at ≥ 300 gpm.]	[In accordance with the Inservice Testing Program]

B 3.7 PLANT SYSTEMS

B 3.7.7 Component Cooling Water (CCW) System

BASES

BACKGROUND

The CCW System provides a heat sink for the removal of process and operating heat from safety related components during an anticipated operational occurrence (AOO) or postulated accident. During normal operation, the CCW System also provides this function for various nonessential components, as well as the spent fuel storage pool. The CCW System serves as a barrier to the release of radioactive byproducts between potentially radioactive systems and the Essential Service Water (ESW) System and thus to the environment.

The CCW System consists of four separate safety classified trains (1, 2, 3 and 4) corresponding to the four layout divisions (1, 2, 3 and 4) and two separate common headers. One of the common headers (common 1 header) is connected normally either to train 1 or to train 2. The other common header (common 2 header) is connected either to train 3 or to train 4. A set of isolation valves per train can separate each train from the common header and either common header is capable of providing safety related cooling of the reactor coolant pump (RCP) thermal barrier cooling common loop. Each safety related train includes a full capacity pump, surge tank, heat exchanger, piping, valves, and instrumentation. Each safety related train is powered from a separate bus. An open surge tank in the system provides pump trip protective functions to ensure that sufficient net positive suction head is available. The pump in each train is automatically started on receipt of a safety injection signal from the Protection System, and all nonessential components are isolated.

Additional information on the design and operation of the system, along with a list of the components served, is presented in FSAR Section 9.2.2 (Ref. 1). The principal safety related function of the CCW System is the removal of decay heat from the safety related systems and operational cooling loads to the heat sink via the ESW System. This may be during a normal or post accident cooldown and shutdown.

BASES

APPLICABLE SAFETY ANALYSES

The design basis of the CCW System is for two CCW trains to remove the post loss of coolant accident (LOCA) heat load from the In-containment Water Storage Tank (IRWST) by cooling the Low Head Safety Injection System heat exchanger at a maximum CCW temperature of 113°F (Ref. 2). The Emergency Core Cooling System (ECCS) LOCA and containment OPERABILITY LOCA each model the minimum performance of the CCW System, respectively. During a unit cooldown to MODE 5 (T_{cold} < 200°F), a maximum temperature of 113°F is assumed. This maintains the IRWST fluid within acceptable limits following a LOCA as it is supplied to the Reactor Coolant System by the ECCS pumps.

The CCW System is designed to perform its function with a single failure of any active component, assuming a loss of offsite power.

The CCW System also functions to cool the unit from residual heat removal (RHR) entry conditions (T_{avg} < 350°F), to MODE 5 (T_{avg} ≤ 200°F), during normal and post accident operations. The time required to cool from 350°F to 200°F is a function of the number of CCW and RHR loops operating. Two CCW trains are sufficient to remove decay heat during subsequent operations with T_{avg} ≤ 200°F. This assumes a maximum service water temperature of 95°F occurring simultaneously with the maximum heat loads on the system.

To meet single failure criteria for the RCP thermal barrier cooling function, the load is required to be cooled by a common header which is capable of being connected to two OPERABLE CCW trains. A single failure of a train initiates an automatic system response to transfer the common header to the remaining train.

The CCW System satisfies Criterion 3 of 10 CFR 50.36(c)(2)(ii).

BASES

LCO

The CCW System consists of four trains. Four CCW trains are required to be OPERABLE to provide the required redundancy to ensure that the system functions to remove post accident heat loads.

A CCW train is considered OPERABLE when:

a. The pump and associated surge tank are OPERABLE; and

b. The associated piping, valves, heat exchanger, and instrumentation and controls required to perform the safety related function are OPERABLE.

With the exception of the RCP thermal barrier cooling common loop, the isolation of CCW from other components or systems not required for safety may render those components or systems inoperable but does not affect the OPERABILITY of the CCW System.

APPLICABILITY

In MODES 1, 2, 3, and 4, the CCW System is a normally operating system, which must be prepared to perform its post accident safety functions, primarily RCS heat removal, which is achieved by cooling the Low Head Safety Injection heat exchanger.

In MODE 5 or 6, the OPERABILITY requirements of the CCW System are determined by the systems it supports.

ACTIONS

A Note has been added to indicate that the applicable Conditions and Required Actions of LCO 3.4.6, "RCS Loops - MODE 4," be entered if an inoperable CCW train results in an inoperable RHR loop. This is an exception to LCO 3.0.6 and ensures the proper actions are taken for these components.

A.1

Required Action A.1 is modified by a Note indicating that the Required Action of A.1 is not applicable if CCW trains are inoperable in both common headers. In this condition, the RCP thermal barrier cooling common loop cannot be aligned to common header capable of being connected to two OPERABLE trains.

BASES

ACTIONS (continued)

If one CCW train is inoperable, action must be taken to align the RCP thermal barrier cooling common loop to a common header capable of being supplied by two OPERABLE CCW trains within 72 hrs. In this condition, the CCW System can perform the RCP thermal barrier cooling function given a single failure. The 72 hour Completion Time is reasonable, based on the low probability of a postulated accident occurring during this period.

A.2

If one CCW train is inoperable, action must be taken to restore OPERABLE status within 120 days. In this condition, the remaining OPERABLE CCW trains are adequate to perform the heat removal function.

B.1

If two CCW trains are inoperable, action must be taken to restore one train to OPERABLE status within 72 hours. In this condition, the remaining OPERABLE CCW trains are adequate to perform the heat removal function. The 72 hour Completion Time is reasonable, based on the redundant capabilities afforded by the OPERABLE trains, and the low probability of a postulated accident occurring during this period.

C.1 and C.2

If a CCW train cannot be restored to OPERABLE status within the associated Completion Time, the unit must be placed in a MODE in which the LCO does not apply. To achieve this status, the unit must be placed in at least MODE 3 within 6 hours and in MODE 5 within 36 hours. The allowed Completion Times are reasonable, based on operating experience, to reach the required unit conditions from full power conditions in an orderly manner and without challenging plant systems.

BASES

SURVEILLANCE REQUIREMENTS

SR 3.7.7.1

This SR is modified by a Note indicating that the isolation of the CCW flow to individual components may render those components inoperable but does not affect the OPERABILITY of the CCW System.

Verifying the correct alignment for manual, power operated, and automatic valves in the CCW flow path provides assurance that the proper flow paths exist for CCW operation. This SR does not apply to valves that are locked, sealed, or otherwise secured in position, since these valves are verified to be in the correct position prior to locking, sealing, or securing. This SR also does not apply to valves that cannot be inadvertently misaligned, such as check valves. This Surveillance does not require any testing or valve manipulation; rather, it involves verification that those valves capable of being mispositioned are in the correct position.

The 31 day Frequency is based on engineering judgment, is consistent with the procedural controls governing valve operation, and ensures correct valve positions.

SR 3.7.7.2

Verifying CCW train leakage is within limits assures an adequate water volume is maintained for each CCW train for cooling SIS loads for 7 days in post-seismic operation with no makeup water source available. The 31 day Frequency is based on the need to perform this Surveillance under normal operating and shutdown conditions for each CCW train. Operating experience has shown that these components usually pass the Surveillance when performed at the 31 day Frequency. Therefore, the Frequency is acceptable from a reliability standpoint.

The leakage value of 4 gallons per hour considers the worst case pressure differential resulting from one CCWS train operating with the associated train for the same common header depressurized. This alignment results in the greatest potential seat leakage across the isolated common header switchover valves. If the train leakage surveillance is not within allowable limits for a CCW train, that train and the associated train for the common header will be declared inoperable if the associated train is not already out of service. When two CCW trains are inoperable, one train must be restored within 72 hours in accordance with LCO 3.7.7, Action B.1.

BASES

SURVEILLANCE REQUIREMENTS (continued)

The duration of SR 3.7.7.2 testing should be long enough for the installed instrumentation to accurately measure the system losses with considerations to environmental changes in temperatures affecting thermal contraction and expansion of water within the CCWS surge tanks.

SR 3.7.7.~~2~~3

This SR verifies proper automatic operation of the CCW valves on an actual or simulated actuation signal. The CCW System is a normally operating system that cannot be fully actuated as part of routine testing during normal operation. This Surveillance is not required for valves that are locked, sealed, or otherwise secured in the required position under administrative controls. The 24 month Frequency is based on the need to perform this Surveillance under the conditions that apply during a unit outage and the potential for an unplanned transient if the Surveillance were performed with the reactor at power. Operating experience has shown that these components usually pass the Surveillance when performed at the 24 month Frequency. Therefore, the Frequency is acceptable from a reliability standpoint.

SR 3.7.7.~~3~~4

This SR verifies proper automatic operation of the CCW pumps on an actual or simulated actuation signal. The CCW System is a normally operating system that cannot be fully actuated as part of routine testing during normal operation. The 24 month Frequency is based on the need to perform this Surveillance under the conditions that apply during a unit outage and the potential for an unplanned transient if the Surveillance were performed with the reactor at power. Operating experience has shown that these components usually pass the Surveillance when performed at the 24 month Frequency. Therefore, the Frequency is acceptable from a reliability standpoint.

REFERENCES

1. FSAR Section 9.2.2.

2. FSAR Section 6.2.

B 3.7 PLANT SYSTEMS

B 3.7.8 Essential Service Water (ESW) System

BASES

BACKGROUND

The ESW System provides a heat sink for the removal of process and operating heat from safety related components during an anticipated operational occurrence (AOO) or postulated accident. During normal operation, and a normal shutdown, the ESW System also provides this function for the associated safety related and nonsafety related systems. The safety related function is covered by this LCO.

The ESW System consists of four separate safety related, cooling water trains. Each train consists of a pump, piping, valving, instrumentation, and mechanical filtration. The system pumps and valves are remote and manually aligned, except in the unlikely event of a LOCA or loss of offsite power. The pumps are automatically started upon receipt of a safety injection signal, and all essential valves are aligned to their post accident positions.

Additional information about the design and operation of the ESW System, along with a list of the components served, is presented in FSAR Section 9.2.1 (Ref. 1). The principal safety related functions of the ESW System is the removal of decay heat from the reactor and reactor coolant pump thermal barrier cooling via the Component Cooling Water (CCW) System and removal of operational heat from the emergency diesel generator (EDG).

BASES

APPLICABLE SAFETY ANALYSES

The design basis of the ESW System is for two ESW trains, in conjunction with the CCW System, to remove core decay heat and support containment cooling following a design basis LOCA as discussed in FSAR Section 6.2 (Ref. 2). This maintains the In-containment Water Storage Tank fluid within acceptable limits following a LOCA as it is supplied to the Reactor Coolant System by the Emergency Core Cooling System pumps. The ESW System also provides cooling to the train EDG during an anticipated operational occurrence (AOO) or postulated accident.

The ESW System, in conjunction with the CCW System, also cools the unit from residual heat removal (RHR), as discussed in FSAR Section 5.4.7 (Ref. 3), entry conditions to MODE 5 during normal and post accident operations. The time required for this evolution is a function of the number of CCW and RHR loops that are operating. Two ESW trains are sufficient to remove decay heat during subsequent operations in MODES 5 and 6. This assumes a maximum ESW System temperature of 95°F occurring simultaneously with maximum heat loads on the system.

The ESW System satisfies Criterion 2 and 3 of 10 CFR 50.36(c)(2)(ii).

LCO

The ESW System consists of four trains. Four ESW trains are required to be OPERABLE to provide the required redundancy to ensure that the system functions to remove post accident heat loads.

An ESW train is considered OPERABLE when the pump, associated piping, valves, and instrumentation and controls required to perform the safety related function are OPERABLE.

APPLICABILITY

In MODES 1, 2, 3, and 4, the ESW System is a normally operating system that is required to support the OPERABILITY of the equipment serviced by the ESW System and required to be OPERABLE in these MODES.

In MODES 5 and 6, the OPERABILITY requirements of the ESW System are determined by the systems it supports.

BASES

ACTIONS

The actions have two Notes added. The first Note indicates that the applicable Conditions and Required Actions of LCO 3.8.1, “AC Sources Operating,” should be entered if an inoperable ESW train results in an inoperable EDG. The second Note indicates that the applicable Conditions and Required Actions of LCO 3.4.6, “RCS Loops MODE 4,” should be entered if an inoperable ESW train results in an inoperable decay heat removal train. This is an exception to LCO 3.0.6 and ensures the proper actions are taken for these components.

A.1

If one ESW train is inoperable, action must be taken to restore OPERABLE status within 120 days. In this condition, the remaining OPERABLE ESW trains are adequate to perform the heat removal function.

The 120 day Completion Time to restore an ESW train to OPERABLE is reasonable since its operation is not assumed in the safety analysis to mitigate the consequences of postulated accidents or AOOs, it provides a reasonable time for repairs, and the low probability of a postulated accident or AOO occurring during this period.

B.1

If two ESW trains are inoperable, action must be taken to restore one to OPERABLE status within 72 hours. In this condition, the two remaining OPERABLE ESW train are adequate to perform the heat removal function. However, the overall reliability is reduced because a single failure in one of the OPERABLE ESW trains could result in loss of ESW System function.

The 72 hour Completion Time is based on the redundant capabilities afforded by the two OPERABLE trains, and the low probability of a postulated accident occurring during this time period.

C.1 and C.2

If an ESW train cannot be restored to OPERABLE status within the associated Completion Time, the unit must be placed in a MODE in which the LCO does not apply. To achieve this status, the unit must be placed in at least MODE 3 within 6 hours and in MODE 5 within 36 hours.

The allowed Completion Times are reasonable, based on operating experience, to reach the required unit conditions from full power.

BASES

SURVEILLANCE REQUIREMENTS

SR 3.7.8.1

This SR is modified by a Note indicating that the isolation of the ESW components or systems may render those components inoperable, but does not affect the OPERABILITY of the ESW System.

Verifying the correct alignment for manual, power operated, and automatic valves in the ESW flow path provides assurance that the proper flow paths exist for ESW System operation. This SR does not apply to valves that are locked, sealed, or otherwise secured in position, since they are verified to be in the correct position prior to being locked, sealed, or secured. This SR does not require any testing or valve manipulation; rather, it involves verification that those valves capable of being mispositioned are in the correct position. This SR does not apply to valves that cannot be inadvertently misaligned, such as check valves.

The 31 day Frequency is based on engineering judgment, is consistent with the procedural controls governing valve operation, and ensures correct valve positions.

SR 3.7.8.2

This SR verifies proper automatic operation of the ESW valves on an actual or simulated actuation signal. The ESW System is a normally operating system that cannot be fully actuated as part of normal testing. This Surveillance is not required for valves that are locked, sealed, or otherwise secured in the required position under administrative controls. The 24 month Frequency is based on the need to perform this Surveillance under the conditions that apply during a unit outage and the potential for an unplanned transient if the Surveillance were performed with the reactor at power. Operating experience has shown that these components usually pass the Surveillance when performed at the 24 month Frequency. Therefore, the Frequency is acceptable from a reliability standpoint.

BASES

SURVEILLANCE REQUIREMENTS (continued)

SR 3.7.8.3

This SR verifies proper automatic operation of the ESW pumps on an actual or simulated actuation signal. The ESW System is a normally operating system that cannot be fully actuated as part of normal testing during normal operation. The 24 month Frequency is based on the need to perform this Surveillance under the conditions that apply during a unit outage and the potential for an unplanned transient if the Surveillance were performed with the reactor at power. Operating experience has shown that these components usually pass the Surveillance when performed at the 24 month Frequency. Therefore, the Frequency is acceptable from a reliability standpoint.

REFERENCES

1. FSAR Section 9.2.1.
2. FSAR Section 6.2.
3. FSAR Section 5.4.7.

B 3.7 PLANT SYSTEMS

B 3.7.9 Safety Chilled Water (SCW) System

BASES

BACKGROUND

The SCW System provides a heat sink for the removal of process and operating heat from safety related components during an anticipated operational occurrence (AOO) or postulated accident. During normal operation, and a normal shutdown, the SCW System also provides this function for the associated safety related systems. The safety related function is covered by this LCO.

The SCW System consists of four ~~independent~~ trains. Each train consists of a chiller refrigeration unit (three 50% compressors per unit), chilled water pumps (two ~~100%~~ pumps), surge tank, piping, valving, and instrumentation. Normally open motor operated cross-tie valves interconnect the supply and return of Train 1 with Train 2 and interconnect the supply and return of Train 3 with Train 4. Each SCW System chiller is sized to meet the system load requirements of two divisional trains. Heat is rejected to the system chilled water as it passes through the cooling coils of the system users. This heat is rejected from the system as it is pumped through the train chiller refrigeration units. Trains 1 and 4 reject this energy to ambient via air cooled condensers while trains 2 and 3 have condensers cooled by the Component Cooling Water (CCW) System. Each refrigeration chiller in the four divisions of the SCWS has three 50 percent capacity compressors to provide sufficient operating redundancy and flexibility in the event of a compressor failure. The two remaining chiller compressors provide 100 percent capacity.

During normal operation, at least one train of the divisional pair is in operation. Either Train 1 or Train 2 chiller provides safety chilled water cooling for all SCW loads within Safeguard Building Divisions 1 and 2, and the associated Fuel Building Ventilation System (FBVS) load. Likewise, the chiller from either Train 3 or 4 provides safety chilled water cooling for both Safeguard Divisions 3 and 4 and the associated FBVS load. During normal operation, the cross-tie isolation valves (supply and return for both divisions) are normally open. The non-operating chiller and pump(s) are maintained in standby. This configuration also allows for maintenance on the non-operating chiller and pump(s). If the normal operating train pump or chiller fails, a switchover sequence to the standby train is automatically initiated. A planned switchover of the operating train is manually initiated from the MCR.

BASES

BACKGROUND (continued)

Following a loss of offsite power, previously running SCW trains return to operation once the emergency diesel generator is started and the associated AC electrical power division is re-energized. To allow divisional maintenance (e.g., maintenance on emergency diesel generators), the required SCWS safety-related components are alternately fed from the adjacent division to provide adequate cooling of certain safety-related components during a design basis event.

The SCW System operation is discussed in FSAR Section 9.2.8 (Ref. 1).

APPLICABLE SAFETY ANALYSES

The design basis of the SCW System is to provide chilled water as a heat sink for the Control Room Air Conditioning System and Safeguard Building Ventilation System Electrical Division safety-related HVAC Systems in addition to the LHSI pump motor and seal coolers. This supports maintaining an acceptable environment in the main control room (MCR) and for safety-related equipment in the essential rooms housing Electrical, Instrumentation and Control, Emergency Feedwater System, and CCW System equipment in the Safeguard Buildings as well as supporting the long term operation of the cooled LHSI pumps in the event of an AOO or postulated accident. Cooling of at least two electrical divisions is required in order to ensure the ability of the plant to meet all required safety related functions during any AOO or postulated accident.

A single active failure of a component of the SCW System, with a loss of offsite power, does not impair the ability of the system to perform its design function. The SCW System is designed in accordance with Seismic Category I requirements.

The SCW System satisfies Criterion 3 of 10 CFR 50.36(c)(2)(ii).

LCO

The SCW System consists of four trains. Four SCW trains are required to be OPERABLE to provide the required redundancy to ensure that the system functions to remove heat loads for all events accompanied by a loss of offsite power and a single failure.

An SCW train is considered OPERABLE when one pump, surge tank, the chiller refrigeration unit with multiple compressors, associated piping, valves, and instrumentation and controls required to perform the safety related function are OPERABLE.

BASES

APPLICABILITY

In MODES 1, 2, 3, and 4, the SCW System is a normally operating system that is required to support the OPERABILITY of the equipment serviced by the SCW System and required to be OPERABLE in these MODES.

In MODES 5 and 6, the OPERABILITY requirements of the SCW System are determined by the systems it supports.

ACTIONS

A.1

If one SCW train is inoperable, action must be taken to restore OPERABLE status within 30 days. In this condition, the three remaining OPERABLE SCW trains are adequate to perform the heat removal function for continued operation and for postulated accidents.

The 30 day Completion Time is based on the redundant capabilities afforded by the three OPERABLE trains, and the low probability of a postulated accident occurring during this time period.

B.1 and B.2

If the SCW train cannot be restored to OPERABLE status within the associated Completion Time, the unit must be placed in a MODE in which the LCO does not apply. To achieve this status, the unit must be placed in at least MODE 3 within 6 hours and in MODE 5 within 36 hours.

The allowed Completion Times are reasonable, based on operating experience, to reach the required unit conditions from full power conditions in an orderly manner and without challenging plant systems.

BASES

SURVEILLANCE REQUIREMENTS

SR 3.7.9.1

This SR is modified by a Note indicating that the isolation of the SCW components or systems may render those components inoperable, but does not affect the OPERABILITY of the SCW System.

Verifying the correct alignment for manual, power operated, and automatic valves in the SCW flow path provides assurance that the proper flow paths exist for SCW System operation. This SR does not apply to valves that are locked, sealed, or otherwise secured in position, since they are verified to be in the correct position prior to being locked, sealed, or secured. This SR does not require any testing or valve manipulation; rather, it involves verification that those valves capable of being mispositioned are in the correct position. This SR does not apply to valves that cannot be inadvertently misaligned, such as check valves.

Verifying the correct alignment for manual, power operated, and automatic valves in the SCW flow path provides assurance that the proper flow paths exist for SCW System operation. This SR does not apply to valves that are locked, sealed, or otherwise secured in position, since they are verified to be in the correct position prior to being locked, sealed, or secured. This SR does not require any testing or valve manipulation; rather, it involves verification that those valves capable of being mispositioned are in the correct position. This SR does not apply to valves that cannot be inadvertently misaligned, such as check valves.

The 31 day Frequency is based on engineering judgment, is consistent with the procedural controls governing valve operation, and ensures correct valve positions.

SR 3.7.9.2

The SR verifies that the heat removal capability of the system is sufficient to remove the heat load assumed in the system heat load calculation. This SR consists of a combination of testing and calculations. The 24 month Frequency is appropriate since significant degradation of the SCW system is slow and is not expected over this time period.

BASES

SURVEILLANCE REQUIREMENTS (continued)

SR 3.7.9.~~2~~3

This SR verifies proper automatic operation of the SCW train on an actual or simulated actuation signal. The SCW System is a normally operating system that cannot be fully actuated as part of routine testing during normal operation. The 24 month Frequency is based on the need to perform this Surveillance under the conditions that apply during a unit outage. Operating experience has shown that these components usually pass the Surveillance when performed at the 24 month Frequency. Therefore, the Frequency is acceptable from a reliability standpoint.

Verifying SCW train leakage is within limits assures an adequate volume of water is maintained for each SCW train for 7 days in post-seismic operation with no make water source available. The 24 month Frequency is based on the need to perform this Surveillance under the conditions that apply during a unit outage. Operating experience has shown that these components usually pass the Surveillance when performed at the 24 month Frequency. Therefore, the Frequency is acceptable from a reliability standpoint.

The leakage value of 0.5 gallons per hour considers the worst case pressure difference between one operating SCW train with the SCW Cross-tie Supply and Return valves closed and the opposite SCW train shutdown. The leak test differential pressure across the closed cross-tie valves will be established between a normal operating train with pumps in operation and a shutdown train with pumps secured. This alignment would result in the greatest potential seat leakage across the isolated valves. If the train leakage surveillance is not within allowable limits for a SCW train, that train and the opposite train will be declared inoperable. The duration of SR 3.7.9.3 test should be long enough for the installed instrumentation to accurately measure the system losses with considerations to environmental changes in temperatures effecting the thermal contraction and expansion of water in the SCWS.

REFERENCES

1. FSAR Section 9.2.8.

B 3.7 PLANT SYSTEMS

B 3.7.19 Ultimate Heat Sink (UHS)

BASES

BACKGROUND

The UHS provides a heat sink for the removal of process and operating heat from safety related components during an anticipated operational occurrence (AOO) or postulated accident. During normal operation, and a normal shutdown, the UHS also provides this function for the associated safety related and non safety related systems. The safety related function is covered by this LCO.

The UHS consists of four separate safety related, cooling water trains. Each train consists of one mechanical draft cooling tower, associated basin, piping, valving, and instrumentation. Each safety related 2-cell Seismic Category I mechanical draft cooling tower rejects energy from the essential service water (ESW) fluid to ambient and returns the cooled fluid to the UHS cooling tower basin, from which the ESW pumps take suction. Each UHS cooling tower basin is sized for 3 days of post loss of coolant accident (LOCA) operation and ensures adequate volume for the required net positive suction head (NPSH) for the associated ESW pump. Post LOCA evaporative losses are replenished by a safety related Seismic Category I source of makeup water. The train associated safety related make-up source delivers water to each basin at ≥ 300 gpm to maintain the NPSH for the ESW pump for up to 30 days following a LOCA.

The mechanical draft cooling towers and basins are safety related, Seismic Category I structures sized to provide heat dissipation for safe shutdown following an accident. The cooling tower is protected from tornado missiles.

[The Seismic Category ~~1~~ I makeup necessary to support 30 days of post accident mitigation is site specific and details are to be provided by the COL applicant.]

Additional information about the design and operation of the UHS is presented in FSAR Section 9.2.5 (Ref. 1).

BASES

APPLICABLE SAFETY ANALYSES

The design basis of the UHS is for two UHS trains, in conjunction with the ESW and Component Cooling Water (CCW) Systems, to dissipate core decay heat and support containment cooling following a design basis LOCA as discussed in FSAR Section 6.2 (Ref. 2). This maintains the In-containment Water Storage Tank fluid within acceptable limits following a LOCA as it is supplied to the Reactor Coolant System by the Safety Injection System pumps. The UHS also provides cooling to the train EDG during an anticipated operational occurrence (AOO) or postulated accident.

The UHS, in conjunction with the ESW and CCW Systems, also cools the unit from residual heat removal (RHR), as discussed in FSAR Section 5.4.7 (Ref. 3), entry conditions to MODE 5 during normal and post accident operations. The time required for this evolution is a function of the number of ESW, CCW and RHR loops that are operating. Two UHS trains are sufficient to remove decay heat during subsequent operations in MODES 5 and 6. This assumes a maximum UHS temperature of 95°F occurring simultaneously with maximum heat loads on the system.

Each UHS basin is sized for 3 days of post LOCA operation without requiring makeup. UHS basin makeup is required to maintain NPSH for the ESW pumps beyond 3 days. This volume of water is assumed to be at ≤ 90°F during normal plant operation to prevent exceeding the maximum ESW temperature during a LOCA.

The operating limits are based on conservative heat transfer analyses for the worst case LOCA. Reference 1 provides the details of the assumptions used in the analysis, which include worst expected meteorological conditions, conservative uncertainties when calculating decay heat, and worst case single active failure. The UHS cooling tower and basin is designed in accordance with Regulatory Guide 1.27 (Ref. 4), which requires a 30 day supply of cooling water in the UHS basin, or equivalent make-up.

The UHS satisfies Criterion 3 of 10 CFR 50.36(c)(2)(ii).

BASES

LCO

The UHS consists of four trains. Four UHS trains are required to be OPERABLE to provide the required redundancy to ensure that the system functions to remove post accident heat loads.

A UHS train is considered OPERABLE when two cooling tower fans, associated piping, valves, and instrumentation and controls required to perform the safety related function are OPERABLE and the UHS basin contains ≥ 23.75 feet of water at ≤ 90°F with capability from makeup from OPERABLE source. [COL applicant to provide definition of OPERABLE makeup source.]

APPLICABILITY

In MODES 1, 2, 3, and 4, the UHS is a normally operating system that is required to support the OPERABILITY of the equipment serviced by the UHS and required to be OPERABLE in these MODES.

In MODES 5 and 6, the OPERABILITY requirements of the UHS is determined by the systems it supports.

ACTIONS

A.1

If one UHS train is inoperable, action must be taken to restore OPERABLE status within 120 days. In this condition, the remaining OPERABLE UHS trains are adequate to perform the heat removal function.

The 120 day Completion Time to restore a UHS train to OPERABLE is reasonable since its operation is not assumed in the safety analysis to mitigate the consequences of postulated accidents or AOOs, it provides a reasonable time for repairs, and the low probability of a postulated accident or AOO occurring during this period.

B.1

If two UHS trains are inoperable, action must be taken to restore one to OPERABLE status within 72 hours. In this condition, the two remaining OPERABLE UHS trains are adequate to perform the heat removal function. However, the overall reliability is reduced because a single failure in one of the OPERABLE UHS trains could result in loss of UHS function.

The 72 hour Completion Time is based on the redundant capabilities afforded by the two OPERABLE trains, and the low probability of a postulated accident occurring during this time period.

BASES

ACTIONS (continued)

C.1 and C.2

If a UHS train cannot be restored to OPERABLE status within the associated Completion Time, the unit must be placed in a MODE in which the LCO does not apply. To achieve this status, the unit must be placed in at least MODE 3 within 6 hours and in MODE 5 within 36 hours.

The allowed Completion Times are reasonable, based on operating experience, to reach the required unit conditions from full power.

SURVEILLANCE REQUIREMENTS

[COL applicant to provide a surveillance for makeup water to UHS cooling tower.]

SR 3.7.19.1

This SR verifies that adequate short term (3 day) cooling can be maintained. The specified level also ensures that sufficient NPSH is available to operate the ESW pumps during the first 3 days post LOCA. The 24 hour Frequency is based on operating experience related to trending of the parameter variations during the applicable MODES. This SR verifies that the UHS basin water level is ≥ 23.75 feet from the bottom of the basin.

SR 3.7.19.2

This SR verifies that the UHS is available to cool the CCW System and EDG to at least its maximum design temperature with the maximum accident or normal design heat loads for 30 days following a postulated accident. With water temperature of the UHS basin ≤ 90°F, the design basis assumptions associated with initial UHS temperature are bounded. With the water temperature of the UHS basin > 90°F, long term cooling capability of the Emergency Core Cooling System (ECCS) loads and Emergency Diesel Generators (EDG) may be affected. The 24 hour Frequency is based on operating experience related to trending of the parameter variations during the applicable MODES.

BASES

SURVEILLANCE REQUIREMENTS (continued)

SR 3.7.19.3

Operating each cooling tower fan for ≥ 15 minutes in each speed setting and direction, including reverse verifies that all fans are OPERABLE and that all associated controls are functioning properly. It also ensures that fan or motor failure, or excessive vibration, can be detected for corrective action. The 31 day Frequency is based on operating experience, the known reliability of the fan units, the redundancy available, and the low probability of significant degradation of the UHS cooling tower fans occurring between surveillances.

SR 3.7.19.4

This SR verifies proper automatic operation of the UHS cooling tower fans on an actual or simulated actuation signal. The UHS is a normally operating system that cannot be fully actuated as part of normal testing during normal operation. The 24 month Frequency is based on the need to perform this Surveillance under the conditions that apply during a unit outage and the potential for an unplanned transient if the Surveillance were performed with the reactor at power. Operating experience has shown that these components usually pass the Surveillance when performed at the 24 month Frequency. Therefore, the Frequency is acceptable from a reliability standpoint.

~~SR 3.7.19.5~~

~~This SR verifies that adequate long term (30 day) cooling can be maintained. The specified makeup flowrate ensures that sufficient NPSH can be maintained to operate the ESW pumps following the first 3 days post LOCA. The 24 month Frequency is based on the need to perform this Surveillance under the conditions that apply during a unit outage and the potential for an unplanned transient if the Surveillance were performed with the reactor at power. Operating experience has shown that these components usually pass the Surveillance when performed at the 24 month Frequency. Therefore, the Frequency is acceptable from a reliability standpoint. This SR verifies that the UHS makeup flowrate is ≥ 300 gpm.~~

BASES

SURVEILLANCE REQUIREMENTS (continued)

SR 3.7.19.5~~6~~

This SR verifies proper automatic operation of the UHS makeup valves on an actual or simulated actuation signal. The UHS is part of the ESW System, a normally operating system that cannot be fully actuated as part of normal testing. This Surveillance is not required for valves that are locked, sealed, or otherwise secured in the required position under administrative controls. The 24 month Frequency is based on the need to perform this Surveillance under the conditions that apply during a unit outage and the potential for an unplanned transient if the Surveillance were performed with the reactor at power. Operating experience has shown that these components usually pass the Surveillance when performed at the 24 month Frequency. Therefore, the Frequency is acceptable from a reliability standpoint.

[SR 3.7.19.6

This SR verifies that adequate long term (30 day) cooling can be maintained. The specified emergency makeup flowrate ensures that sufficient NPSH can be maintained to operate the ESW pumps following the first 3 days post LOCA. The Frequency is in accordance with the Inservice Testing Program and is in accordance with the ASME OM Code (Ref. 5). This SR verifies that the UHS emergency makeup flowrate is ≥ 300 gpm.]

REFERENCES

1. FSAR Section 9.2.5.

2. FSAR Section 6.2.

3. FSAR Section 5.4.7.

4. Regulatory Guide 1.27, Rev. 2, January 1976.

[5. ASME Code for Operation and Maintenance of Nuclear Power Plants.]