US-APWR DCD Tier 1 Enhancement Project

Thursday 2/17/11 AM Handout 2

Table of Contents

Section Title	Handout Page Number
Section 2.4.1 Reactor System	
Section 2.4.1 Mark-up	26
Section 2.4.1 Basis Document	1
Section 2.4.2 Reactor Coolant System	
Section 2.4.2 Mark-up	42
Section 2.4.2 Basis Document	5
Section 2.4.3 Loose Parts Monitoring System	
Section 2.4.3 Mark-up	71
Section 2.4.3 Basis Document	12
Section 2.4.4 Emergency Core Cooling System	
Section 2.4.4 Mark-up	73
Section 2.4.4 Basis Document	13
Section 2.4.5 Residual Heat Removal System	
Section 2.4.5 Mark-up	108
Section 2.4.5 Basis Document	19
Section 2.4.7 Reactor Coolant Pressure Boundary Leakage Detection System	
Section 2.4.7 Mark-up	135
Section 2.4.7 Basis Document	25

Tier 1 Changes Explanation/Basis Document
Tier 1, Section 2.4.1

Item No.	Explanation/Basis for Change
Design Description 2.4.1.1	
A	Text was relocated, revised and condensed into a paragraph format instead of bullets.
B	Text relocated, revised, and added to provide a more concise functional description. Text of the first sentence and the last two sentences deleted because that information is provided by the functional arrangement ITAAC number 3. See Item J.
C	Text was relocated and revised to provide a more concise design description. See Items D, E, and S. This change alters the response to RAI 193, Question 14.03.04-19.
D	The information in the first sentence is provided in Table 2.4.1-1 and Figure 2.4.1-1. The second sentence was deleted; the information is not required in Tier 1. The third sentence was revised and relocated to the paragraph denoted by Item C. This change does not impact the response to RAI 193, Question 14.03.04-19.
E	Text was relocated and revised See Item C. Information on control rod cluster assemblies is provided in Table 2.4.1-1; Figures 2.4.1-1 and 2.4.1-2.
F	Tier 1 and ITAAC are not required to address in-core and ex-core instrumentation functionality. Information about type and number of detectors and thermocouples is provided in Table 2.4.1-1.
G	This information is provided in Table 2.4.1-1 and Figure 2.4.1-1. Second sentence was relocated and revised. See Item B. Flow induced vibration is addressed by ITAAC number 9. See Item M.
H	Third and fourth sentences were relocated and revised. See Item B. This information is provided in ITAAC number 3, the functional arrangement Figure 2.4.1-1, and the added Table 2.4.1-2. See Item J.
I	Removed redundant information. The number of water level instruments and relative location are provided in Table 2.4.1-1 and Figure 2.4.1-1. The specific type of sensor is not required in Tier 1.
J	ITAAC numbers 1 and 2. See Note 1. ITAAC number 3. See Notes 1 and 2. See Items B and H.
K	ITAAC numbers 4.a has been deleted due to its redundant requirement of ITAAC number 5.a. See ITAAC Table 4.a basis description. ITAAC 4.b. Note 1. ITAAC number 5.a. Notes 1 and 2. See Item R.
L	Note 1.
M	Notes 1 and 2. See Items R and G. ITAAC Number 7. Note 1.
N	Notes 1 and 2. See Item X.
O	Notes 1 and 2. See Item W
P	Notes 1 and 2. See Item T.
Q	Notes 1 and 2. See Item R.
R	Notes 1 and 2. See Items K, M, and Q. Information on types of alloys is not required in Tier 1. This change alters the response to RAI 193, Question 14.03.04-20.
S	Text relocated and revised to provide a more concise and condensed design description. See Item C.
T	See Notes 1 and 2. See Item P.

Item No.	Explanation/Basis for Change
U	Text was deleted because it was redundant to wording located in Item C.
V	Removed negative statement for consistency in Tier 1.
W	Notes 1 and 2. See Item O.
X	Notes 1 and 2. See Item N.
Y	Removed negative statement for consistency in Tier 1.
Table 2.4.1-1	
AA	Correction of the name of components.
BB	Added the number of pre-loaded closure stud assemblies.
CC	Word addition based on RAI 570, Question 03.09.04-3
ITAAC Table 2.4.1-2	
1	No change from Rev.2.
2	No change from Rev.2 There is no impact to the response to RAI 193, Question 14.03.04-19.
3	DC, ITA, AC - Generic changes to Functional Arrangement ITAAC to provide clarity and consistency. [RIS p7, Scope, second bullet] The changes do not impact the response to RAI 193, Question 14.03.04-19.
4.a	DC, ITA, AC – This ITAAC is deleted as the information intended to be verified by this ITAAC is redundant to information which will be verified as part of the generic ASME Components and Piping ITAAC, #5.a, which states, "The ASME Code Section III components of the reactor system, identified in Table 2.4.1-1, are fabricated, installed, and inspected in accordance with ASME Code Section III requirements." The changes do not impact the response to RAI 193, Question 14.03.04-20.
4.b	DC - Editorial changes to provide a more concise design commitment. [RIS p7, Scope, first bullet] ITA - Editorial change [RIS p3, Language, fourth bullet] AC - Wording added to provide the scope of the report. [RIS p3, Language, fifth bullet]
5.a	DC, ITA, AC – Generic changes to ASME ITAAC to provide clarity and consistency. [RIS p7, Scope, second bullet] The changes do not impact responses to RAI 242, Question 14.03.03-5 and RAI 404, Question 14.03.03-20. Response to RAI 404 supersedes the response to RAI 242.
5.b	DC, ITA, AC – Generic changes to ASME ITAAC to provide clarity and consistency. [RIS p7, Scope, second bullet] This change alters the responses to RAI 242, Question 14.03.03-5 and RAI 404, Question 14.03.03-20. Response to RAI 404 supersedes the response to RAI 242.
6	DC, ITA, AC -Generic changes to ASME ITAAC to provide clarity and consistency. [RIS p7, Scope, second bullet] The changes do not impact the response to RAI 242, Question 14.03.03-8.

Item No.	Explanation/Basis for Change
7	DC, ITA, AC -Generic changes to ASME ITAAC to provide clarity and consistency. [RIS p7, Scope, second bullet]
8	DC, ITA, AC - Generic changes to Seismic ITAAC to provide clarity and consistency. [RIS p7, Scope, second bullet] Note that this generic ITAAC was modified slightly to account for excluding the fuel assemblies from this ITAAC. This change alters the response to RAI 193, Question 14.03.04-21.
9	DC - Editorial changes to provide a more concise design commitment. [RIS p7, Scope, first bullet] ITA - Wording added to clarify inspections and tests to be performed and to provide consistency with the AC. [RIS p5, Logic, seventh bullet] AC - Wording added to provide consistency with the ITA. [RIS p5, Logic, seventh bullet] [RIS p3, Language, fifth bullet]
10	DC, ITA, AC – Generic changes to Equipment Qualification ITAAC to provide clarity and consistency. [RIS p7, Scope, second bullet] This change alters the response to RAI 193, Question 14.03.04-22 and the response to RAI 510, Question 03.11-21.
11	DC, ITA, AC – Generic changes to Electrical Separation ITAAC to provide clarity and consistency. [RIS p7, Scope, second bullet] These changes do not impact the response to RAI 193, Question 14.03.04-23.
12	DC, ITA, AC – Generic changes to Electrical Separation ITAAC to provide clarity and consistency. [RIS p7, Scope, second bullet] These changes alter the response to RAI 191, Question 14.03.04-09.
13	DC, ITA, AC – Generic changes made to alarms, displays & controls ITAAC to provide clarify and consistency. [RIS p5, Logic, seventh bullet and p7, Consistency, second bullet]
14	This does not impact the response to RAI 193, Question 14.03.04-25.
Figure 2.4.1-1	
EE	Fixed text boxes. Editorial change of “incore” to “in-core”
Figure 2.4.1-2	
FF	Wording change of “Control Rod” to “Rod Cluster” to agree with DD text. The degrees are deleted from figure because this is reference information and is not necessary attribute in Tier 1.
Figure 2.4.1-3	
GG	Addition of the suffix (A thru G) on dimensions of the figure to specify the acceptance criteria in ITAAC #3.

Tier 1 Changes Explanation/Basis Document
Tier 1, Section 2.4.1

Note 1: Revised to provide consistency between the Design Description (DD) and the Design Commitment (DC) in the ITAAC table. Revised text to include only the necessary attributes for ITAAC.

Note 2: Text relocated within the DD section to align with the sequence and numbering of the corresponding DC in the ITAAC table.

Tier 1 Changes Explanation/Basis Document
Tier 1, Section 2.4.2

Item No.	Explanation/Basis for Change
Design Description 2.4.2	
A	Removed subheadings for format consistency. Editorial changes to bullets. One bullet deleted because it was not a design function and is addressed in item W.
B	Removed subheadings for format consistency.
C	Notes 1 and 2. See item F.
D	Editorial clarification.
E	Item added to provide consistency with DC numbering.
F	Notes 1 and 2. See item C.
G	Notes 1 and 2. See item VV.
H	Notes 1 and 2. See item VV.
I	Notes 1 and 2. See item SS.
J	Notes 1 and 2. See item SS.
K	Notes 1 and 2. See item TT.
L	Notes 1 and 2. See item TT.
M	Notes 1 and 2. See item UU.
N	Notes 1 and 2. See item UU.
O	Notes 1 and 2. See item SS.
P	Notes 1 and 2. See item TT.
Q	Notes 1 and 2. See item SS.
R	Notes 1 and 2. See item TT.
S	Notes 1 and 2. See item BBB.
T	Notes 1 and 2. See item AAA.
U	Notes 1 and 2. See item AAA.
V	Design Description added to be consistent with DC.
W	Design Description added to be consistent with DC.
X	Design Description added to be consistent with DC.
Y	Design Description added to be consistent with DC.
Z	Design Description added to be consistent with DC.
AA	Notes 1 and 2. See item XX.
BB	Notes 1 and 2. See item XX.
CC	Notes 1 and 2. See item XX.
DD	New text added to provide consistency with corresponding DC.
EE	Notes 1 and 2. See item XX.
FF	Notes 1 and 2. See items YY and XX.
GG	Notes 1 and 2. See item XX.
HH	Notes 1 and 2. See item XX.
II	Design Description added to be consistent with DC.
JJ	Notes 1 and 2. See item XX.
KK	Subheadings deleted to provide consistent Design Description format.
LL	Text deleted as too detailed for Tier 1, not consistent with SRP 14.3 guidance, and not consistent with other contemporary DCDs.
MM	Text deleted as too detailed for Tier 1, not consistent with SRP 14.3 guidance.
NN	Text deleted as too detailed for Tier 1, not consistent with SRP 14.3 guidance.
OO	Text deleted because it was redundant to text in the introduction section.

Item No.	Explanation/Basis for Change
PP	Text deleted because it is not necessary for Tier 1 per SRP 14.3. This change alters the response to RAI 193, 14.03.04-19.
QQ	Text deleted as it was redundant to text in the introduction section referencing ITAAC in Section 2.11.2.
RR	Subheadings deleted to provide consistent Design Description format.
SS	Notes 1 and 2. See items I, J, O, and Q.
TT	Notes 1 and 2. See items K, L, P, and R.
UU	Notes 1 and 2. See items M and N.
VV	Notes 1 and 2. See items G and H.
WW	Text deleted as unnecessary and not consistent with SRP 14.3 guidance.
XX	Notes 1 and 2. See items AA, BB, CC, EE, FF, GG, and HH.
YY	Notes 1 and 2. See item FF. This change alters the response to RAI 193, 14.03.04-29.
ZZ	Text deleted as unnecessary and not consistent with SRP 14.3 guidance.
AAA	Notes 1 and 2. See items T and U.
BBB	Notes 1 and 2. See item S.
CCC	Text deleted as unnecessary and not consistent with SRP 14.3 guidance.
DDD	Text deleted as unnecessary and not consistent with SRP 14.3 guidance.
Table 2.4.2-1	
No changes	
Table 2.4.2-2	
No changes	
Table 2.4.2-3	
No changes	
Table 2.4.2-4	
No changes	
ITAAC Table 2.4.2-5	
1	No changes
2	DC, AC – References to table and figure added to functional arrangement for completeness. ITA, AC – Editorial
3.a	ITA, AC – Generic change for ASME ITAAC. Text added to provide consistency with DC. This change does not impact the response to RAI 242, 14.03.03-10. [RIS p5, Logic, seventh bullet]
3.b	ITA, AC – Generic change for ASME ITAAC. Text added to provide consistency with DC. This change does not impact the response to RAI 242, 14.03.03-10. [RIS p5, Logic, seventh bullet]
4.a.i	ITA – Generic change for ASME ITAAC. Text added to provide consistency with DC. [RIS p5, Logic, seventh bullet] – Editorial. – These changes do not impact the responses to RAI 242, 14.03.03-5 and RAI 404, 14.03.03-20.

Tier 1 Changes Explanation/Basis Document
Tier 1, Section 2.4.2

Item No.	Explanation/Basis for Change
4.a.ii	ITA – Generic change for ASME ITAAC. Text added to provide consistency with DC. This change does not impact the responses to RAI 242, 14.03.03-5 and RAI 404, 14.03.03-20. [RIS p5, Logic, seventh bullet] AC – Generic change for ASME ITAAC. Revised to provide clarity regarding what the AC is intended to provide. This change alters the responses to RAI 242, 14.03.03-5 and RAI 404, 14.03.03-20. [RIS p5, Logic, seventh bullet]
4.b.i	ITA – Generic change for ASME ITAAC. Text added to provide consistency with DC. [RIS p5, Logic, seventh bullet] – Generic change for ASME ITAAC. Editorial – These changes alter the responses to RAI 242, 14.03.03-6 and RAI 404, 14.03.03-21.
4.b.ii	ITA – Generic change for ASME ITAAC. Text added to provide consistency with DC. This change does not impact the responses to RAI 242, 14.03.03-6 and RAI 404, 14.03.03-21. [RIS p5, Logic, seventh bullet] AC – Generic change for ASME ITAAC. Revised to provide clarity regarding what the AC is intended to provide. This change alters the response to RAI 242, 14.03.03-6 and RAI 404, 14.03.03-21. [RIS p5, Logic, seventh bullet]
5.a	ITA, AC – Generic change for ASME ITAAC. Text added to provide consistency with DC. This change does not impact the response to RAI 242, 14.03.03-8. [RIS p5, Logic, seventh bullet]
5.b	ITA, AC – Generic change for ASME ITAAC. Text added to provide consistency with DC. This change does not impact the response to RAI 242, 14.03.03-8. [RIS p5, Logic, seventh bullet]
6.a	ITA, AC – Generic change for ASME ITAAC. Text added to provide consistency with DC. [RIS p5, Logic, seventh bullet]
6.b	ITA, AC – Generic change for ASME ITAAC. Text added to provide consistency with DC. [RIS p5, Logic, seventh bullet]

Item No.	Explanation/Basis for Change
7	DC – Generic change for seismic ITAAC. Text revised in the form of a design commitment. [RIS p5, Logic, seventh bullet] 7.i ITA, AC – Generic change for seismic ITAAC. Revised to provide consistency in wording. [RIS p5, Logic, seventh bullet] 7.ii ITA – Generic change for seismic ITAAC. Revised to remove "and/or" text. Additional text to provide clarification. [RIS p5, Logic, seventh bullet] 7.ii AC – Generic change for seismic ITAAC. Revised to reference a report when the ITA is an "analyses." [RIS p5, Logic, seventh bullet] 7.iii ITA – Generic change for seismic ITAAC. Analyses added to ensure verification of DC. Additional text added for clarification. [RIS p5, Logic, seventh bullet] 7.iii AC – Generic change for seismic ITAAC. Revise to reference a report when the ITA is an "analyses." [RIS p5, Logic, seventh bullet]
8	DC – Generic change for seismic ITAAC. Text revised in the form of a design commitment. Reference to normal loads removed as unnecessary. This change alters the responses to RAI 242, 14.03.03-9 and RAI 452, 14.03.02-12. [RIS p5, Logic, seventh bullet] 8.i ITA, AC – Generic change for seismic ITAAC. Revised to provide consistency in wording. This change alters the responses to RAI 242, 14.03.03-9 and RAI 452, 14.03.02-12. [RIS p5, Logic, seventh bullet] 8.ii ITA – Generic change for seismic ITAAC. Analyses added to ensure verification of DC. Text deleted to provide consistency with DC. This change alters the responses to RAI 242, 14.03.03-9 and RAI 452, 14.03.02-12. [RIS p5, Logic, seventh bullet] 8.ii AC – Generic change for seismic ITAAC. Text deleted to provide consistency with DC. This change alters the responses to RAI 242, 14.03.03-9 and RAI 452, 14.03.02-12. [RIS p5, Logic, seventh bullet]

Item No.	Explanation/Basis for Change
9.a	DC – Generic change for EQ ITAAC. Text revised in the form of a design commitment. Replaced "event" with "accident" to provide consistency with Tier 2 discussions. This change does not impact the response to RAI 193, 14.03.04-22. [RIS p5, Logic, seventh bullet] 9.a.i ITA – Generic change for EQ ITAAC. Revised to remove "and/or" text. Deleted "analysis" only option. Additional text to provide consistency with DC. This change does not impact the response to RAI 193, 14.03.04-22. [RIS p5, Logic, seventh bullet] 9.a.i AC – Generic change for EQ ITAAC. Revised to reference a report when the ITA is an "analyses." Revised text to provide consistency with DC. This change alters the response to RAI 193, 14.03.04-22. [RIS p5, Logic, seventh bullet] 9.a.ii ITA, AC – Generic change for EQ ITAAC. Text added/revised to provide consistency with DC. This change alters the response to RAI 193, 14.03.04-22. [RIS p5, Logic, seventh bullet]
9.b	DC, ITA – Generic change for electrical separation ITAAC. Text added/revised for clarity and to provide consistency between the DC and ITA. This change does not impact RAI 193, 14.03.04-23. [RIS p5, Logic, seventh bullet]
9.c	DC – Generic change for electrical separation ITAAC. Text revised to provide clarity. This change does not impact the response to RAI 191, 14.03.04-09. [RIS p5, Logic, seventh bullet] AC – Generic change for electrical separation ITAAC. Criteria added. Text revised to provide consistency with DC. This change alters the response to RAI 191, 14.03.04-09. [RIS p5, Logic, seventh bullet]
10.a	DC, ITA, AC – Revised to clarify scope. [RIS p7, Consistency, third bullet] 10.a.i AC – Revised to provide consistency with Tier 2. [RIS p7, Consistency, fourth bullet] 10.a.ii AC – Revised to reference a report when the ITA is an "analyses." [RIS p5, Logic, seventh bullet]
10.b	AC – Revised to remove the reference to a report when the ITA is not "analyses." This change alters the response to RAI 274, 05.04.01.01-6. [RIS p5, Logic, seventh bullet]

Item No.	Explanation/Basis for Change
10.c	ITA – Deleted option for analyses because it was not appropriate. Text revised to provide clarity regarding the purpose of the test. This change alters the response to RAI 193, 14.03.04-27. [RIS p5, Logic, sixth bullet] AC – Revised to provide consistency with revised ITA and to reference a new figure as the acceptance criteria. New figure consistent with Tier 2. This change alters the response to RAI 193, 14.03.04-27. [RIS p5, Logic, seventh bullet]
10.d	AC – Revised to reference a report when the ITA is an "analyses." [RIS p5, Logic, seventh bullet]
10.e	AC – Editorial change
11.a	DC, AC – Generic changes to MCR controls ITAAC. Text clarified. [RIS p5, Logic, seventh bullet]
11.b	DC, ITA – Text added to provide consistency with DC and AC. [RIS p7, Consistency, second bullet]
12.a	DC, ITA, AC – Generic changes to MOV ITAAC. This change does not impact the response to RAI 193, 14.03.04-28. [RIS p7, Consistency, second bullet]
12.b	ITA – Text added to provide consistency with DC. [RIS p7, Consistency, second bullet]
13.a	DC, ITA, AC – Generic changes to MCR controls ITAAC. Text clarified. [RIS p5, Logic, seventh bullet]
13.b	ITA – Editorial change
14	DC, ITA, AC – Generic changes to MCR controls ITAAC. Text clarified. This change alters the response to RAI 193, 14.03.04-30. [RIS p5, Logic, seventh bullet]
15	DC, ITA, AC – Generic changes to MCR controls ITAAC. Requirement added to ITA for tests of control functions. Text clarified. This change alters the response to RAI 193, 14.03.04-30. [RIS p5, Logic, seventh bullet]
16	ITA – Text added to provide consistency with DC. This change does not impact the response to RAI 210, 3.6.3-1. [RIS p7, Consistency, second bullet] AC – Revised to clarify how the intent of the DC will be satisfied. This change does not impact the response to RAI 210, 3.6.3-1. [RIS p7, Consistency, second bullet]
17	DC, ITA, AC – Generic changes to MCR controls ITAAC. Text clarified. [RIS p5, Logic, seventh bullet] This change alters the response to RAI 452, 14.03.02-13.
Figure 2.4.2-1	

Tier 1 Changes Explanation/Basis Document
Tier 1, Section 2.4.2

Item No.	Explanation/Basis for Change
No changes	
Figure 2.4.2-2	
Revised "REMARKS" for consistency and clarity.	
Figure 2.4.2-3	
New figure added to provide acceptance criteria for ITAAC item #10.c.	

Note 1: Revised to provide consistency between the Design Description (DD) and the Design Commitment (DC) in the ITAAC table. Revised text to include only the necessary attributes for ITAAC.

Note 2: Text relocated within the DD section to align with the sequence and numbering of the corresponding DC in the ITAAC table.

Tier 1 Changes Explanation/Basis Document
Tier 1, Section 2.4.3

Item No.	Explanation/Basis for Change
Design Description Section 2.4.3	
A	Revised to be consistent with Tier 2, and relocated. See items C and E.
B	Revised to be consistent with Tier 2, and relocated. See item D.
C	Note 1. See item A.
D	Revised and relocated; Note 2. See item B.
E	Design Description text revised to align with the sequence and numbering of the corresponding Design Commitment in the ITAAC table. See items A and G. Note 1 - Revised Design Description text to include only the necessary attributes for ITAAC.
F	Text added to the Design Description section to align with the sequence and numbering of the corresponding Design Commitment in the ITAAC table.
G	Text relocated within the Design Description section to align with the sequence and numbering of the corresponding Design Commitment in the ITAAC table. See item E.
ITAAC Table 2.4.3-1	
1	No changes
2	DC, ITA, AC – Editorial corrections, and revised to be consistent with Tier 2. [RIS p7, Standardization & Consistency, fourth bullet]

Note 1: Revised to provide consistency between the Design Description (DD) and the Design Commitment (DC) in the ITAAC table. Revised text to include only the necessary attributes for ITAAC.

Note 2: Text relocated within the DD section to align with the sequence and numbering of the corresponding DC in the ITAAC table.

Tier 1 Changes Explanation/Basis Document
Tier 1, Section 2.4.4, ECCS

Item No.	Explanation/Basis for Change
Design Description 2.4.4	
A	Subheader removed and text relocated from body of DD. See Item HH.
B	Relocated from body of DD. See Item II.
C	Notes 1 and 2. See Item GG.
D	Notes 1 and 2. See Item NN.
E	Notes 1 and 2. See Item WW.
F	Notes 1 and 2. See Item WW.
G	Notes 1 and 2. See Item WW.
H	Notes 1 and 2. See Item WW.
I	Notes 1 and 2. See Item XX.
J	Notes 1 and 2. See Item XX.
K	Notes 1 and 2. See Item XX.
L	Notes 1 and 2. See Item XX.
M	Notes 1 and 2. See Item WW.
N	Notes 1 and 2. See Item WW.
O	Note 2. See Item DDD.
P	Notes 1 and 2. See Items JJ and CCC.
Q	Notes 1 and 2. See Item CCC.
R	Item added to provide consistency with DC numbering.
S	Notes 1 and 2. See Items OO, PP, QQ, RR, SS, UU, VV
T	Notes 1 and 2. See Item TT
U	Notes 1 and 2. See Item UU
V	Notes 1 and 2. See Item ZZ
W	New text added to provide consistency with corresponding DC.
X	New text added to provide consistency with corresponding DC.
Y	Notes 1 and 2. See Item ZZ
Z	Notes 1 and 2. See Item AAA.
AA	Notes 1 and 2. See Items BBB and OO.
BB	Notes 1 and 2. See Item ZZ
CC	Notes 1 and 2. See Item ZZ
DD	New text added to provide consistency with corresponding DC.
EE	Notes 1 and 2. See Item XX.
FF	Notes 1 and 2. See Item XX
GG	Notes 1 and 2. Deleted subheader. See Item C.
HH	Deleted subheader and relocated material to introductory paragraph. See Item A.
II	Relocated to introductory paragraph. See Item B.
JJ	Notes 1 and 2. See Item P.
KK	Notes 1 and 2. See Items S, Z and AA.
LL	Text deleted as too detailed for Tier 1, not consistent with SRP 14.3 guidance.
MM	Text deleted since this item is already addressed in the introductory paragraph, number (4).
NN	Notes 1 and 2. See Item D.
OO	Notes 1 and 2. See Items C and S. Additional text deleted as too detailed for Tier 1, not consistent with SRP 14.3 guidance and addressed in the introductory paragraphs.

Item No.	Explanation/Basis for Change
PP	Notes 1 and 2. See Items C, S, P and Z. Already addressed in the introductory paragraphs.
QQ	Notes 1 and 2. See Items C and S. Additional text deleted as too detailed for Tier 1, not consistent with SRP 14.3 guidance and is already addressed in the introductory paragraphs.
RR	Text is not consistent with SRP 14.3 guidance, and is already addressed in the introductory paragraphs.
SS	Notes 1 and 2. See Items C and S. Additional text deleted as too detailed for Tier 1, not consistent with SRP 14.3 guidance, and is already addressed in the introductory paragraphs.
TT	Notes 1 and 2. See Items C and T. Additional text deleted as too detailed for Tier 1, not consistent with SRP 14.3 guidance, and is nalready addressed in the introductory paragraphs.
UU	Notes 1 and 2. See Items C and U. Additional text deleted as too detailed for Tier 1, not consistent with SRP 14.3 guidance, and is already addressed in the introductory paragraphs.
VV	Notes 1 and 2. See Items C and S. Additional text deleted as too detailed for Tier 1, not consistent with SRP 14.3 guidance, and is already addressed in the introductory paragraphs.
WW	Notes 1 and 2. Deleted subheader. See Items E, F, G, H, K, L, M, N.
XX	Notes 1 and 2. See Items I, J, K, L, EE, FF.
YY	Subheader and text deleted as too detailed for Tier 1, not consistent with SRP 14.3 guidance.
ZZ	Notes 1 and 2. Deleted subheader. See Items V, Y, BB, CC, KK.
AAA	Notes 1 and 2. Deleted subheader See Item Z.
BBB	Notes 1 and 2. Deleted subheader. See Item AA.
CCC	Notes 1 and 2. See Items P and Q.
DDD	Note 2. Deleted subheader . See Item O.
EEE	Text deleted as not consistent with SRP 14.3 guidance. Interface requirements are addressed in Tier 1 Chapter 3.
FFF	Text and subheader deleted as unnecessary. Reference to the ITAAC tables is adequately addressed by 2.4.4.2
Table 2.4.4-1	
GGG	Correction of typographical error: Emergency Letdown is from A and D, consistent with Table 2.4.4-2.
Table 2.4.4-2	
	"Transfer Open" is added to Direct Vessel Safety Injection Line Isolation Valves Active Safety Function column to include missing active safety function in this table.
Table 2.4.4-3	
	No Changes
Table 2.4.4-4	
	No Changes
ITAAC Table 2.4.4-5	
1.a	Generic changes made to functional arrangement ITAAC to provide clarity and consistency. [RIS p7, Scope, second bullet] [

Tier 1 Changes Explanation/Basis Document
Tier 1, Section 2.4.4, ECCS

Item No.	Explanation/Basis for Change
1.b	Generic changes made to mechanical separation ITAAC to provide clarity and consistency. [RIS p7, Scope, second bullet]This change alters the response to RAI 192, 14.03.04-10.
2.a.i	ITA Generic changes made to ASME ITAAC to provide clarity and consistency. [RIS p7, Scope, second bullet] This change alters the response to RAI 404, 14.03.03-20 and RAI 242, 14.03.03-5.
2.a.ii	ITA Generic changes made to ASME ITAAC to provide clarity and consistency. [RIS p7, Scope, second bullet] This does not alter the response to RAI 404, 14.03.03-20 and RAI 242, 14.03.03-5.
2.b.i	ITA Generic changes made to ASME ITAAC to provide clarity and consistency. [RIS p7, Scope, second bullet] This does not alter the response to RAI 404, 14.03.03-21 and RAI 242, 14.03.03-6.
2.b.ii	ITA, AC Generic changes made to ASME ITAAC to provide clarity and consistency. [RIS p7, Scope, second bullet] This does not alter the response to RAI 404, 14.03.03-21 and RAI 242, 14.03.03-6.
3.a	ITA, AC Generic changes made to ASME ITAAC to provide clarity and consistency. [RIS p7, Scope, second bullet] This does not alter the response to RAI 242, 14.03.03-8.
3.b	ITA, AC Generic changes made to ASME ITAAC to provide clarity and consistency. [RIS p7, Scope, second bullet] This does not alter the response to RAI 242, 14.03.03-8.
4.a	ITA, AC Generic changes made to ASME ITAAC to provide clarity and consistency. [RIS p7, Scope, second bullet]
4.b	ITA, AC Generic changes made to ASME ITAAC to provide clarity and consistency. [RIS p7, Scope, second bullet]
5.a.i	ITA, AC Generic changes made to Seismic ITAAC to provide clarity and consistency. [RIS p7, Scope, second bullet]
5.a.ii	ITA, AC Generic changes made to Seismic ITAAC to provide clarity and consistency. [RIS p7, Scope, second bullet]
5.a.iii	ITA, AC Generic changes made to Seismic ITAAC to provide clarity and consistency. [RIS p7, Scope, second bullet]
5.b.i	DC, ITA, AC Generic changes made to Seismic ITAAC to provide clarity and consistency. [RIS p7, Scope, second bullet]. This change alters the response to RAI 452, 14.03.02-12
5.b.ii	DC, ITA, AC Generic changes made to Seismic ITAAC to provide clarity and consistency. [RIS p7, Scope, second bullet]. This change alters the response to RAI 452, 14.03.02-12

Tier 1 Changes Explanation/Basis Document
Tier 1, Section 2.4.4, ECCS

Item No.	Explanation/Basis for Change
6.a.i	Generic changes made to EQ ITAAC to provide clarity and consistency. [RIS p7, Scope, second bullet]. This change alters the response to RAI 511 03.11-21 and RAI 193 14.03.04-22.
6.a.ii	Generic changes made to EQ ITAAC to provide clarity and consistency. [RIS p7, Scope, second bullet].
6.b	Generic changes made to electrical independence ITAAC to provide clarity and consistency. [RIS p7, Scope, second bullet]This change does not alter the response to RAI 193, 14.03.04-23.
6.c	Generic changes made to electrical separation ITAAC to provide clarity and consistency. [RIS p7, Scope, second bullet] Impacts RAI 191 14.03.04-07.
7.a	Deleted
7.b.i.a	ITA, AC Revised to clarify that the test will measure accumulator level decease and convert the change to cubic feet injected into the reactor vessel; therefore an analysis is required with an associated report. This change alters the response to RAI 446, 14.03.04-41 (RIS, p5, Logic, seventh bullet)
7.b.i.b	ITA, AC ITA revised to clarify that tests and analyses are needed to verify the cross-section area. Tests" is appropriate because resistance coefficient is calculated from injection tests and cross section area is not measured. AC revised to include "a report exists", since an analysis is performed. This change alters the response to RAI 446, 14.03.04-41 (RIS, p5, Logic, seventh bullet)
7.b.ii	AC Revised to include "a report exists", since an analysis is performed. (RIS, p5, Logic, seventh bullet)
7.b.iii.a	ITA, AC ITAAC split in order to facilitate timely closure of individual items as the component becomes available for inspection. (RIS p4, Logic, second bullet)
7.b.iii.b	ITA, AC ITAAC split in order to facilitate timely closure of individual items as the component becomes available for inspection. (RIS p4, Logic, second bullet)
7.b.iv	ITA, AC Revised to eliminate "inspection for the existence of a report" and to eliminate unquantifiable terms "minimized" . This change alters the response to RAI 348, 14.03.11-38 and 39 (RIS p4, Nomenclature, 7th bullet; p7, Logic, 6th bullet)
7.b.v	ITA, AC Revised to eliminate "inspection for the existence of a report" and to clarify that it is not realistic that all coatings in the containment will be DBA-qualified. Small amounts of non-qualified coatings are allowed consistent with design assumptions. This change alters the response to RAI 263, 6.2.2-12 and RAI 348, 14.03.11-38 and 39. (RIS p5, Logic, 6th bullet)

Tier 1 Changes Explanation/Basis Document
Tier 1, Section 2.4.4, ECCS

Item No.	Explanation/Basis for Change
7.b.vi	ITA, AC Revised to eliminate unnecessary wording, since AC conflicts with itself; the first AC indicates only reflective insulation is used, the second indicates that some fibrous is used. Also revised to eliminate "inspection for the existence of a report" and to eliminate unquantifiable term "minimized". This change alters the response to RAI 278, 6.2.2-16 and RAI 348, 14.03.11-38 and 39. (RIS p4, Nomenclature, 7th bullet; p5, Logic, 6th bullet)
7.c	ITA, AC Revised to eliminate "exist", since the functional arrangement ITAAC verifies that the baskets exist. Editorial change for clarity: "with" to "contain". Added "tops of the" to clarify where the elevation in the AC applies. Analysis is required in ITA to calculate weight of NaTB. (RIS p5, Logic, 7th bullet; p7, Consistency, 4th bullet)
7.d	AC Revised to conform with SRP 14.3, pg 14.3-59 (item 3.a) and to provide consistent NPSH ITAAC for all applicable systems. (RIS p7, Consistency, 4th bullet)
8	DC, AC Generic changes made to alarms, displays & controls ITAAC to provide clarity and consistency. This change alters the response to RAI 193, 14.03.04-29. [RIS p5, Logic, seventh bullet and p7, Consistency, second bullet
9.a	DC, ITA, AC 9.a.i , Changes made to provide clarity and consistency regarding use of type tests and specification of a requirement for a report if analyses are performed. 9.a.ii, Changes to provide clarity and consistency. 9.a.iii, New ITAAC for to verify that as-built equipment is bounded by types tests and analyses. Consistent with EQ approach. 9.a.iv, Renumbered due to addition of new ITAAC above. AC reworded for clarity and consistency. [RIS p7, Consistency, second bullet]
10.a	DC, AC Generic changes made to alarms, displays & controls ITAAC to provide clarify and consistency. This change alters the response to RAI 193, 14.03.04-29. [RIS p5, Logic, seventh bullet and p7, Consistency, second bullet]
10.b	No change.
10.c	AC Revised to make AC consistent with DC (two signals). . [RIS p7, Consistency, second bullet.
11	DC, ITA, AC Generic changes made to alarms, displays & controls ITAAC to provide clarity and consistency. [RIS p7, Scope, second bullet]. This change alters the response to RAI 193, 14.03.04-30.
12	DC, ITA, AC Generic changes made to alarms, displays & controls ITAAC to provide clarity and consistency. [RIS p7, Scope, second bullet]. This change alters the response to RAI 193, 14.03.04-30.
13	AC Generic changes made to LBB ITAAC to provide clarity and consistency. [RIS p7, Scope, second bullet]

Item No.	Explanation/Basis for Change
14.a	DC, ITA, AC This ITAAC is deleted because this ITAAC is redundant with ITAAC Item 2.a.i.. This change alters the response to RAI 242, 14.03.03-10.
14.b	DC, ITA, AC This ITAAC is deleted because this ITAAC is redundant with ITAAC Item 2.b.i. This change alters the response to RAI 242, 14.03.03-10.
Table 2.4.4-6	
GGG	Correction of typographical error on small flow injection resistance coefficient formula. X should be replaced with Y. Correction of spelling of "uncertainty".
Figure 2.4.4-	
HHH	Revised "REMARKS" for consistency and clarity.

Note 1: Revised to provide consistency between the Design Description (DD) and the Design Commitment (DC) in the ITAAC table. Revised text to include only the necessary attributes for ITAAC.

Note 2: Text relocated within the DD section to align with the sequence and numbering of the corresponding DC in the ITAAC table.

Tier 1 Changes Explanation/Basis Document
Tier 1, Section 2.4.5

Item No.	Explanation/Basis for Change
Design Description 2.4.5	
A	Design Description introduction expanded in order to consolidate and include certain functional descriptions relocated from other places of this section. See Items F, I, K, P, T, and V.
B	Deleted because the description is redundant to the description in the introductory paragraphs (Item A). The second sentence does not belong in Tier 1 since it provides no information about the RHRS.
C	Deleted because this information is redundant and provided in the introductory paragraphs (Item A) and Table 2.4.5-2.
D	Notes 1 and 2. See Item BB.
E	Notes 1 and 2. See Item BB.
F	Sentence relocated to the introductory paragraphs. See Item A. This change does not impact the response to RAI 184, Question 14.03.07-27.
G	Note 1. Deleted information is provided in Table 2.4.5-1 and Figure 2.4.5-1 and in the introductory paragraphs.
H	Notes 1 and 2. See Item U. This change alters the response to RAI 192, Question 14.03.04-10.
I	Text revised and relocated to the introductory paragraphs. See Item A.
J	Not used.
K	Text revised and relocated to introductory paragraphs. See Item A.
L	Notes 1 and 2. See Item FF.
M	Text deleted: Information can be determined from Figure 2.4.5-1.
N	Notes 1 and 2. See Item BB.
O	Notes 1 and 2. See Item HH.
P	Text revised and included in the introductory paragraphs. See Item A.
Q	Flooding analysis has been performed for all systems and is included in Tier 2, as well as being addressed in Tier 1 Section 2.2. This statement is not needed in this section.
R	Notes 1 and 2. See Item GG.
S	Text deleted: This statement is covered in several ITAAC Items (1.a, 1.b, 5.a. 5.b, 14) and potential missile hazards are addressed in Tier 2. Fires are addressed in Tier 1 Section 2.2.
T	Text deleted because it is redundant. See Item A. This change alters the response to RAI 184, Question 14.03.07-27.
U	Notes 1 and 2. See Item H. This change alters the response to RAI 192, Question 14.03.04-10.
V	Text relocated and revised. See Item A. This change does not impact the response to RAI 222, Question 14.03.11-20.
W	Notes 1 and 2. See Item Z.
X	Notes 1 and 2. See Item Z.
Y	Notes 1 and 2. See Item Z.
Z	Notes 1 and 2. See Items W, X, Y, LL.
AA	Notes 1 and 2. See Item RR.
BB	Notes 1 and 2. See Item D, E, N, QQ.
CC	Notes 1 and 2. See Item OO, PP.
DD	Note 1.

Item No.	Explanation/Basis for Change
EE	Note 1.
FF	Note 1 and 2. See Item L.
GG	Notes 1 and 2. See Item R.
HH	ITAAC numbers 9, 11; Notes 1 and 2. See Item O and NN.
II	Note 1.
JJ	Notes 1 and 2. See Item NN.
KK	Note 1.
LL	Notes 1 and 2. See Item Z.
MM	Deleted because this information is redundant and provided in the introductory paragraphs. See Item A.
NN	Notes 1 and 2. See Items HH and JJ.
OO	Notes 1 and 2. See Item CC. Deleted second paragraph, information not required in the Design Description.
PP	Notes 1 and 2. See Item CC.
QQ	Notes 1 and 2. See Item BB.
RR	Notes 1 and 2. See Item AA.
SS	Deleted negative statement to ensure design description consistency in Tier 1.
TT	Deleted text not appropriate for Tier 1 Design Description section. There are performance values provided in ITAAC number 8.
Table 2.4.5-2	
	Correction of the active safety function. (Sheet 2 of 2)
Table 2.4.5-3	
	No change
ITAAC Table 2.4.5-5	
1.a	DC, ITA, AC - Generic changes to Functional Arrangement ITAAC to provide clarity and consistency. [RIS p7, Scope, second bullet]
1.b	DC, ITA, AC - Generic changes to ITAAC for physical separation to provide clarity and consistency. [RIS p7, ITAAC Scope, 2nd bullet] This change alters the response to RAI 192, Question 14.03.04-10.
2.a.i	ITA -Generic changes to ASME ITAAC to provide clarity and consistency. [RIS p7, Scope, second bullet]
2.a.ii	ITA, AC - Generic changes to ASME ITAAC to provide clarity and consistency. [RIS p7, Scope, second bullet] This change alters the response to RAI 242, Question 14.03.03-5 and the response to RAI 404, Question 14.03.03-20.
2.b.i	ITA - Generic changes to ASME ITAAC to provide clarity and consistency. [RIS p7, Scope, second bullet] This change alters the response to RAI 242, Question 14.03.03-5 and the response to RAI 404, Question 14.03.03-20.

Tier 1 Changes Explanation/Basis Document
Tier 1, Section 2.4.5

Item No.	Explanation/Basis for Change
2.b.ii	ITA, AC - Generic changes to ASME ITAAC to provide clarity and consistency. [RIS p7, Scope, second bullet] This change alters the response to RAI 242, Question 14.03.03-5 and the response to RAI 404, Question 14.03.03-20.
3.a	ITA, AC - Generic changes to ASME ITAAC to provide clarity and consistency. [RIS p7, Scope, second bullet] This change does not impact the response to RAI 242, Question 14.03.03-8.
3.b	ITA, AC - Generic changes to ASME ITAAC to provide clarity and consistency. [RIS p7, Scope, second bullet] This change alters the response to RAI 242, Question 14.03.03-8.
4.a	ITA, AC - Generic changes to ASME ITAAC to provide clarity and consistency. [RIS p7, Scope, second bullet]
4.b	ITA, AC - Generic changes to ASME ITAAC to provide clarity and consistency. [RIS p7, Scope, second bullet]
5.a	DC, ITA, AC - Generic changes to Seismic ITAAC to provide clarity and consistency. [RIS p7, Scope, second bullet]
5.b	DC, ITA, AC - Generic changes to Seismic ITAAC to provide clarity and consistency. [RIS p7, Scope, second bullet] This change alters the responses to RAI 242, Question 14.03.03-9, RAI 452, Question 14.03.02-12, RAI 193, Question 14.03.04-19 and UAP-HF-10043.
6.a	DC, ITA, AC - Generic changes to Environmental Qualification ITAAC to provide clarity and consistency. [RIS p7, Scope, second bullet] This change alters the response to RAI 511, Question 03.11-21 and the response to RAI 193 Question 14.03.04-22.
6.b	DC, ITA - Generic changes to Electrical Separation ITAAC to provide clarity and consistency. [RIS p7, Scope, second bullet] This change does not impact the responses to RAI 193, Question 14.03.04-19 and RAI 193, Question 14.03.04-23.
6.c	DC, AC - Generic changes to Electrical Separation ITAAC to provide clarity and consistency. [RIS p7, Scope, second bullet] This change alters the response to RAI 191, Question 14.03.04-19.
7.a	DC, AC -Text revised to provide the appropriate information. [RIS p7, Scope, first bullet] AC - Revised to provide consistency with DC wording. [RIS, p7, Standardization, second bullet]

Tier 1 Changes Explanation/Basis Document
Tier 1, Section 2.4.5

Item No.	Explanation/Basis for Change
8.a	DC- 8.a.i – Text modified to replace "is designed to cool" with "cools". The intent of the ITAAC is to verify the as-built equipment meets the design requirements [RIS, fifth and sixth bullets under "Focus, Logic, and Practicality"] ITA- 8.a.i – Text added with the correct ITA needed to validate the Acceptance Criteria. [RIS, p5, Logic, seventh bullet] AC -8.a.i – Text added to specify report required. [RIS, p3, Logic, seventh bullet]
8.b	Deleted. The intent of this ITAAC is met by the Functional Arrangement ITAAC # 1.a.
8.c	Deleted. The intent of this ITAAC is met by the Functional Arrangement ITAAC # 1.a.
8.d	DC Text modified to replace "is designed to provide" with "provides". The intent of the ITAAC is to verify the as-built equipment meets the design requirements [RIS, fifth and sixth bullets under "Focus, Logic, and Practicality"] AC – Text revised to make sure ITAAC is consistent in the use of technical terms. [RIS, p4, Language, sixth bullet]
8.e	ITA- 8.e.ii –Text revised to remove the conjunction "and/or". [RIS, p3, Language, fourth bullet] AC –8.e.ii –Text revised so ITAAC is associated with the correct activity. [RIS, p5, Logic, seventh bullet]
8.f	ITA Text relocated within for clarity. AC – Text revised to specify the type of report required and to provide the correct activity needed to validate the Acceptance Criteria. [RIS, p3, Language, fifth bullet] [RIS, p5, Logic, seventh bullet] This change alters the response to RAI 192, Question 14.03.04-11.
9	DC, ITA, AC - Generic changes to MCR Controls ITAAC to provide clarity and consistency. [RIS p7, Scope, second bullet] This change alters the response to RAI 193, Question 14.03.04-29.
10.a	DC, ITA, AC - Generic changes made to MOV and Check Valve ITAAC to provide clarity and consistency. [RIS p7, Scope, second bullet] This change does not impact the response to RAI 193, Question 14.03.04-28.
10.b	ITA - Generic changes made to MOV and Check Valve ITAAC to provide clarity and consistency. [RIS p7, Scope, second bullet]
11	DC, ITA, AC -Generic changes to MCR Controls ITAAC to provide clarity and consistency. [RIS p7, Scope, second bullet] This change alters the response to RAI 193, Question 14.03.04-29.
12	DC, ITA, AC - Generic changes to MCR Controls ITAAC to provide clarity and consistency. [RIS p7, Scope, second bullet] This change alters the response to RAI 193, Question14.03.04-30.

Item No.	Explanation/Basis for Change
13	DC, ITA, AC - Generic changes to RSC Controls ITAAC to provide clarity and consistency. [RIS p7, Scope, second bullet] This change alters the responses to RAI 193, Question 14.03.04-30 and UAP-HF-10043.
14	DC Editorial ITA The ITA has been revised to ensure that references exist and provide the appropriate information. [RIS, p7, Standardization, second bullet] AC – Revised to provide consistency with DC wording. [RIS, p7, Standardization, second bullet] [RIS, p3, Language, fifth bullet] This change does not impact the response to RAI 210, Question 3.6.3-1.
15.a	DC, ITA, AC - This ITAAC is deleted as the information intended to be verified by this ITAAC is redundant to information which will be verified as part of the generic ASME Components and Piping ITAAC, #2.a.i, which states, "The ASME Code Section III components of the RHR system, identified in Table 2.4.5-2, are fabricated, installed, and inspected in accordance with ASME Code Section III requirements." This change alters the response to RAI 242, Question 14.03.03-10.
15.b	DC, ITA, AC - This ITAAC is deleted as the information intended to be verified by this ITAAC is redundant to information which will be verified as part of the generic ASME Components and Piping ITAAC, #2.a.i, which states, "The ASME Code Section III components of the RHR system, identified in Table 2.4.5-2, are fabricated, installed, and inspected in accordance with ASME Code Section III requirements." This change alters the response to RAI 242, Question 14.03.03-10.
Figure 2.4.5-1	
	- Editorial changes to the Remark text box for clarification. - Equipment boundaries between SRV-003A and discharge line are deleted because both are EC2. (SRV-003B, C, D are analogous) - The flow path to RWS Sparger line is moved from B-loop to A-loop.

Note 1: Revised to provide consistency between the Design Description (DD) and the Design Commitment (DC) in the ITAAC table. Revised text to include only the necessary attributes for ITAAC.

Note 2: Text relocated within the DD section to align with the sequence and numbering of the corresponding DC in the ITAAC table.

Item No.	Explanation/Basis for Change
Design Description Section 2.4.7	
A	Revised to be consistent with Tier 2, and relocated. See item B. This change alters the response to RAI 165, Revision 1, 05.02.05-1.
B	Revised and to be consistent with Tier 2, and relocated to align with the sequence and numbering of the corresponding DC in the ITAAC table. See item A. This change alters the response to RAI 165, Revision 1, 05.02.05-1.
C	Added to reference other ITAAC applicable to the containment airborne particulate radioactivity monitor. This change alters the response to RAI 165, Revision 1, 05.02.05-1.
ITAAC Table 2.4.7-1	
1	DC – Revised for editorial correction, clarification and consistency with Tier 2, and to add alarms. This change alters the responses to RAI 165, Revision 1, 05.02.05-1 and RAI 438, Revision 1, 05.02.05-8. This change does not impact the response to RAI 478, Revision 1, 05.02.05-11. [RIS, Standardization, fourth bullet]
1.i	ITA – Revised to clarify as-built instrument channels and for consistency with the DC. This change alters the response to RAI 165, Revision 1, 05.02.05-1. This change does not impact the responses to RAI 478, Revision 1, 05.02.05-11 or RAI 438, Revision 1, 05.02.05-8. [RIS, Logic, sixth bullet; Consistency, third bullet] AC – Revised for clarification and to be consistent with ITA. This change alters the response to RAI 165, Revision 1, 05.02.05-1. This change does not impact the responses to RAI 478, Revision 1, 05.02.05-11 or RAI 438, Revision 1, 05.02.05-8. [RIS, Logic, seventh bullet]
1.ii	ITA – Revised to add analysis, for clarification, and to be consistent with AC. This change alters the response to RAI 165, Revision 1, 05.02.05-1. This change does not impact the responses to RAI 478, Revision 1, 05.02.05-11 or RAI 438, Revision 1, 05.02.05-8. [RIS, Logic, seventh bullet] AC – Revised for clarification and to be consistent with ITA. This change alters the responses to RAI 165, Revision 1, 05.02.05-1 and RAI 438, Revision 1, 05.02.05-8. This change does not impact the response to RAI 478, Revision 1, 05.02.05-11. [RIS, Logic, seventh bullet]

Tier 1 Changes Explanation/Basis Document
Tier 1, Section 2.4.7

Item No.	Explanation/Basis for Change
1.iii	ITA – Revised to add analysis, for clarification, and to be consistent with AC. This change alters the response to RAI 165, Revision 1, 05.02.05-1. This change does not impact the responses to RAI 478, Revision 1, 05.02.05-11 or RAI 438, Revision 1, 05.02.05-8. [RIS p.5, Logic, seventh bullet] AC – Revised for clarification and to be consistent with ITA. This change alters the responses to RAI 165, Revision 1, 05.02.05-1 and RAI 438, Revision 1, 05.02.05-8. This change does not impact the response to RAI 478, Revision 1, 05.02.05-11. [RIS p.5, Logic, seventh bullet]
1.iv	ITA (revised in its entirety by the response to RAI 478, Revision 1, 05.02.05-11) – This change alters the response to RAI 478, Revision 1, 05.02.05-11. [RIS, Nomenclature, 4 bullet; Logic, sixth bullet; Consistency, third bullet] AC (revised in its entirety by the response to RAI 478, Revision 1, 05.02.05-11) – This change alters the response to RAI 478, Revision 1, 05.02.05-11. [RIS, Logic, seventh bullet]
2	This ITAAC was deleted by the response to RAI 478, Revision 1, 05.02.05-11.

2.4 REACTOR SYSTEMS

2.4.1 Reactor System

2.4.1.1 Design Description

~~**System Purpose and Functions**~~

A

The ~~primary purposes and functions of the~~ reactor system is a safety-related system that (1) generates heat by controlled nuclear fission which is transferred to the circulating reactor coolant, (2) provides barriers to contain radioactivity associated with reactor operation, and (3) provides the primary means for controlling reactivity and shutting down the reactor.

~~are to:~~

~~Generate heat by controlled nuclear fission and transfer the heat generated to the reactor coolant,~~

~~Provide the primary means for controlling reactivity and shutting down the reactor, and,~~

~~Provide barriers to contain radioactivity associated with reactor operation.~~

~~The reactor system is a safety-related system. Its significant safety functions include shutting down the reactor and containing radioactivity associated with reactor operation.~~

~~**Location and Functional Arrangement**~~

B

~~All of the reactor system is located within the containment.~~ The reactor system includes the reactor internals (consisting of upper and lower assemblies), the fuel assemblies, the control rods, the reactor vessel, in-core thermocouples and neutron detectors, and the control rod drive mechanisms (CRDMs). The reactor vessel has no penetrations located below the top of the reactor core and is supported by eight steel support pads, which are integral with the nozzles. ~~Figure 2.4.1-1 illustrates the reactor general assembly, showing the arrangement of the reactor system components. Figure 2.4.1-2 and Figure 2.4.1-3 show the arrangement of the fuel assemblies and rod cluster control assemblies and the arrangement of the reactor vessel, respectively.~~

C

Reactivity is controlled by the use of rod cluster control assemblies and soluble boron in the primary coolant. Following reactor trip, loss of electrical power to the CRDM coils unlatches each drive rod, so each rod cluster control assembly drops by gravity to the fully inserted position. The fuel assembly is designed to preclude damage during normal operation or during anticipated operational occurrences.

~~**Key Design Features**~~

~~The reactor core contains 257 fuel assemblies. Each fuel assembly is composed of fuel rods, which contain fuel pellets. The fuel assembly is designed so that it would not be damaged in normal operation or during anticipated operational occurrences~~. D

~~The core reactivity control is provided by 69 rod cluster control assemblies and by the soluble boron in the primary coolant. The CRDMs are magnetically operated.~~ E

~~The signals of ex-core detectors are used as input to the reactor protection system. The in-core instrumentation system consists of thermocouples and in-core neutron detectors. These neutron detectors are used to measure core power distribution and to calibrate the ex-core detectors.~~ F

~~The core support structures support and align the fuel assemblies. The reactor internals distribute coolant flow. The reactor internals consist of two major assemblies, the lower reactor internal assembly, and the upper reactor internal assembly. The core cavity is formed by a stainless steel neutron reflector. The flow induced vibration response of the reactor internals should be acceptably low in comparison with stress limit of high cycle fatigue. The major reactor internals are illustrated in Figure 2.4.1-1.~~ G

~~The cylindrical reactor vessel measures approximately 435.1 inches from the bottom of its hemispherical bottom head dome to the top of the vessel flange mating surface, with an inside diameter of approximately 202.8 inches. Eight nozzles, located above the fuel, are attached to four coolant loops. No penetrations are located below the top of the reactor core. It is supported by eight steel support pads which are integral with the nozzles. The closure head is held in place with 58 preloaded closure stud assemblies.~~ H

~~The reactor vessel water level is measured using probes that determine reactor coolant liquid inventory above the upper core plate using discrete heated junction thermocouple sensors.~~ I

1. Deleted J

2. Deleted

3. The functional arrangement of the reactor vessel and internals is as described in the Design Description of Subsection 2.4.1.1 and as shown in Figure 2.4.1-1, Figure 2.4.1-2, and Figure 2.4.1-3.

4.a Deleted K

4.b The low alloy steel materials of construction used for the reactor vessel pressure retaining parts satisfy the fracture toughness requirements of 10 CFR 50 Appendix G and ASME Code Section III.

5.a The ASME Code Section III components of the reactor system, identified in Table 2.4.1-1, are fabricated, installed and inspected in accordance with ASME Code Section III requirements. K

5.b The ASME Code Section III components of the reactor system identified in Table 2.4.1-1 are reconciled with the design requirements. L

6. Pressure boundary welds in ASME Code Section III components, identified in Table 2.4.1-1, meet ASME Code Section III requirements for non-destructive examination of welds. M

7. The ASME Code Section III components, identified in Table 2.4.1-1, retain their pressure boundary integrity at their design pressure.

8. The seismic Category I equipment identified in Table 2.4.1-1 can withstand seismic design basis loads without loss of safety function.

9. The reactor internals can withstand flow-induced vibration.

10. The Class 1E equipment identified in Table 2.4.1-1 as being qualified for a harsh environment can withstand the environmental conditions that would exist before, during, and following a design basis accident without loss of safety function for the time required to perform the safety function. N

11. Class 1E equipment, identified in Table 2.4.1-1, is powered from its respective Class 1E division. O

12. Separation is provided between redundant divisions of reactor system Class 1E cables, and between Class 1E cables and non-Class 1E cables.

13. Displays identified in Table 2.4.1-1 are provided in the MCR. P

14. Irradiation specimen guides are attached to the core barrel to hold capsules with material surveillance specimens. Q

~~**Seismic and ASME Code Classifications**~~ R

~~The reactor system is designed and fabricated to meet seismic Category I standards so it withstands a design basis earthquake and retains its safety functions, as indicated in Table 2.4.1-1.~~

~~The reactor system components identified in Table 2.4.1-1 are designed and fabricated to ASME Code Section III requirements. Pressure boundary welds in the ASME Code Section III components identified in Table 2.4.1-1 meet ASME Code Section III requirements and the welding materials used are qualified to these requirements. Information on materials and weld quality are as follows.~~

~~The reactor vessel is fabricated of low alloy steel with stainless steel cladding on the inside surfaces. The low alloy steel materials used to the reactor vessel pressure boundary satisfy the fracture toughness requirements of 10 CFR 50 Appendix G and ASME Code Section III. Surveillance capsules located in irradiation specimen guide~~ R

~~attached to the outside of the core barrel provide data that can be related to reactor vessel material condition after irradiation. The surveillance program for the capsules complies with 10 CFR 50 Appendix H~~.

~~The CRDM pressure housings are made of austenitic stainless steel. The reactor internals are made of corrosion resistant materials such as stainless steel and nickel-chrome-iron alloy.~~

~~The reactor system is fabricated and welded in accordance with applicable U.S. standards, including Section III of the ASME Code. Compliance with these standards ensures that the reactor system maintains pressure boundary integrity at design pressure.~~

~~System Operation~~

S

~~Normal modes of operation include startup, power operation, shutdown, and refueling. Reactor startup initiates the controlled nuclear fission process. During normal power operation, controlled fission in the reactor system produces heat that is transferred to the circulating reactor coolant. Following reactor trip, loss of electrical power to the CRDM coils unlatches the drive rod, so gravity drops the rod cluster control assembly to the fully inserted position.~~

~~Displays~~

T

~~The equipment so identified in Table 2.4.1-1 has safety-related displays in the main control room~~.

~~Logic~~

U

~~A reactor trip signal triggers insertion of the RCCAs, as well as in case of loss of electrical power.~~

~~Interlocks~~

V

~~There are no interlocks needed for direct safety functions related to the reactor system.~~

~~Class 1E Electrical Power Sources and Divisions~~

W

~~The equipment so identified in Table 2.4.1-1 is powered from their respective Class 1E division. Separation is provided between these Class 1E divisions and between Class 1E divisions and non-Class 1E divisions.~~

~~Equipment to be Qualified for Harsh Environments~~

X

~~The equipment so identified in Table 2.4.1-1 is qualified for a harsh environment to ensure they can maintain functional operability under all service conditions, including the design basis accident.~~

~~Interface Requirements~~

~~There are no safety-related interfaces with systems outside of the certified design.~~ Y

2.4.1.2 Inspections, Tests, Analyses, and Acceptance Criteria

Table 2.4.1-2 describes the ITAAC for the reactor system.

Table 2.4.1-1 Equipment Key Attributes

Equipment[1]	Tag #	ASME Code Section III Class	Seismic Category	Class 1E/ Qual. for Harsh Envir	S-VDU Display
Fuel assemblies (257)	—	None	I	No	No
Rod cluster control assemblies (69)	—	None	I	No	No
Core support structures	—	CS	I	No	No
RCCA guide tubes (69) ~~thimbles~~	—	None	I	No	No
Reactor vessel, including all nozzles	—	1	I	No	No
Reactor vessel head	—	1	I	No	No
Reactor vessel head stud bolt assemblies (58)	—	1	I	No	No
CRDM pressure housings (69)	—	1	I	No	No
~~In core thermocouples~~Core exit temperature	ICT-TE-001 thru ICT-TE-026	—	I	Yes/Yes	Yes
Reactor vessel water level ~~instruments~~ (2)	RCS-LE-181 RCS-LE-182	—	I	Yes/Yes	Yes
Source Range Neutron Flux (2)	NIS-NE-031, 032	—	I	Yes/Yes[2]	Yes
Intermediate Range Neutron Flux (2)	NIS-NE-035, 036	—	I	Yes/Yes[2]	No
Power Range Neutron Flux (4)	NIS-NE-041, 042, 043, 044	—	I	Yes/Yes[2]	No
Wide Range Neutron Flux (2)	NIS-NE-033, 034	—	I	Yes/Yes	Yes

DD

AA

BB

CC

Legend: S-VDU = safety visual display unit (VDU)

Notes:

1. Figures 2.4.1-1, 2.4.1-2, and 2.4.1-3 show many of these components.
2. Qualification for harsh environment is not required for post-accident environmental condition.

Table 2.4.1-2 Reactor System Inspections, Tests, Analyses, and Acceptance Criteria (Sheet 1 of 4)

Design Commitment	Inspections, Tests, Analyses	Acceptance Criteria
1. Deleted	1. Deleted	1. Deleted
2. Deleted	2. Deleted	2. Deleted
3. ~~The functional arrangement of the reactor vessel is as shown in , Figure 2.4.1-3 and as described in this subsection~~. The functional arrangement of the reactor vessel and internals is as described in the Design Description of Subsection 2.4.1.1 and as shown in Figure 2.4.1-1, Figure 2.4.1-2, and Figure 2.4.1-3.	3. Inspection~~s~~ of the as-built RV and internals, excluding fuel assemblies, ~~system~~ will be performed.	3. The as-built reactor vessel and internals functional arrangement, excluding fuel assemblies, conforms to the functional arrangement as described in the Design Description of Subsection 2.4.1.1 and as shown in Figure 2.4.1-1, Figure 2.4.1-2, and Figure 2.4.1-3 with the following dimensional tolerances;~~, and the description in Subsection 2.4.1.1~~ A: +0.79/-0.79 inches B: +0.20/-0.40 inches C: +0.20/-0.20 inches D: +0.62/-0.20 inches E: +0.62/-0.20 inches F: +0.50/-0.24 inches G: +0.50/-0.24 inches H: +2.17/-1.34 inches
4.a Deleted~~The materials of construction of the ASME Code Section III components identified in Table 2.4.1-1 are in accordance with ASME Code requirements.~~	4.a Deleted~~Inspection of the certified material test reports will be performed.~~	4.a Deleted~~The materials of construction of the ASME Code Section III components identified in Table 2.4.1-1 are in accordance with ASME Code requirements.~~
4.b The low alloy steel materials of construction used for the reactor vessel pressure ~~boundary~~retaining parts satisfy the fracture toughness requirements of 10 CFR 50 Appendix G and ASME Code Section III.	4.b Tests and~~/or~~ analyses of the materials of construction will be performed.	4.b ~~The~~ASME Code Section III data report(s) (certified when required by ASME Code) exists and concludes that the low alloy steel materials of construction used for the reactor vessel pressure ~~boundary~~retaining parts satisfy the fracture toughness requirements of ~~10 CFR 50 Appendix G and~~ ASME Code Section III and the beltline materials have an initial Charpy upper-shelf energy of equal to or greater than 75 ft-lb.

Design Commitment	Inspections, Tests, Analyses	Acceptance Criteria
5.a The ASME Code Section III components of the reactor system, identified in Table 2.4.1-1, are fabricated, installed and inspected in accordance with ASME Code Section III requirements.	5.a ~~An i~~Inspection of the as-built ASME Code Section III components of the reactor system, identified in Table 2.4.1-1, will be performed.	5.a The ASME Code Section III data report(s) (certified, when required by ASME Code) and inspection reports (including N-5 Data Reports where applicable) exist and conclude that the as-built ASME Code Section III components of the reactor system identified in Table 2.4.1-1 are fabricated, installed, and inspected in accordance with ASME Code Section III requirements.

Table 2.4.1-2 Reactor System Inspections, Tests, Analyses, and Acceptance Criteria (Sheet 2 of 4)

Design Commitment	Inspections, Tests, Analyses	Acceptance Criteria
5.b The ASME Code Section III components of the reactor system identified in Table 2.4.1-1 are reconciled with the design requirements.	5.b A reconciliation analysis of the components in Table 2.4.1-1 using as-designed and as-built information and ASME Code Section III design report(s) (NCA-3550) will be performed.	5.b The ASME Code Section III design report(s) (certified, when required by ASME Code) exist and conclude that design reconciliation has been completed in accordance with the ASME Code, for the as-built ASME Code Section III components of the reactor system identified in Table 2.4.1-1. ~~are reconciled with the design requirements.~~ The report documents the results of the reconciliation analysis.
6. Pressure boundary welds in ASME Code Section III components, identified in Table 2.4.1-1, meet ASME Code Section III requirements for non-destructive examination of welds.	6. Inspections of the as-built pressure boundary welds in ASME Code Section III components, identified in Table 2.4.1-1, will be performed in accordance with the ASME Code Section III.	6. The ASME Code Section III code reports exist and conclude that the ASME Code Section III requirements are met for non-destructive examination of the as-built pressure boundary welds in ASME Code Section III components identified in Table 2.4.1-1.
7. The ASME Code Section III components, identified in Table 2.4.1-1, retain their pressure boundary integrity at their design pressure.	7. A hydrostatic test will be performed on the as-built components, identified in Table 2.4.1-1, required by the ASME Code Section III to be hydrostatically tested.	7. ASME Code Data Report(s) exist and conclude that ~~T~~the results of the hydrostatic test of the as-built components identified in Table 2.4.1-1 as ASME Code Section III ~~class 1~~ conform ~~with~~ to the requirements of the ASME Code Section III.
8. The seismic Category I equipment~~,~~ identified in Table 2.4.1-1~~, is designed to~~can withstand seismic design basis loads without loss of safety function.	8.i Inspections will be performed to verify that the as-built seismic Category I ~~as-built~~ equipment identified in Table 2.4.1-1, excluding fuel assemblies, is located in ~~the containment~~a seismic Category I structure.	8.i The as-built seismic Category I ~~as-built~~ equipment identified in Table 2.4.1-1, excluding fuel assemblies, is located in ~~the containment~~ a seismic Category I structure.
	8.ii Type tests, ~~and/or~~ analyses, or a combination of type tests and analyses of ~~the~~ seismic Category I equipment identified in Table 2.4.1-1 will be performed using analytical assumptions, or will be performed under conditions, which bound the seismic design	8.ii ~~The results of the type tests and/or analyses~~A report exists and concludes that the seismic Category I equipment identified in Table 2.4.1-1 can withstand seismic design basis loads without loss of safety function.

	basis requirements.	
	8.iii ~~An i~~Inspections and analyses will be performed to verify that ~~on~~ the as-built seismic Category I equipment identified in Table 2.4.1-1, including anchorages, excluding fuel assemblies, is seismically bounded by the tested or analyzed conditions.	8.iii A report exists and concludes that ~~T~~the as-built seismic Category I equipment identified in Table 2.4.1-1, including anchorages, excluding fuel assemblies, is seismically bounded by the tested or analyzed conditions.

Table 2.4.1-2 Reactor System Inspections, Tests, Analyses, and Acceptance Criteria (Sheet 3 of 4)

Design Commitment	Inspections, Tests, Analyses	Acceptance Criteria
9. The reactor internals can withstand flow-induced vibration.	9.i ~~The~~ A flow-induced vibration type test will be performed to measure the vibration response in the pre-operational test on the first US-APWR unit. ~~, with associated pre-test and post-test inspections.~~	9.i ~~The~~ A report exists and concludes that the results of the first US-APWR unit flow-induced vibration test show that the alternating~~ve~~ stress is acceptably low in comparison with the limit for high cycle fatigue in the ASME code. ~~No structural damage or change is observed in post-test inspections.~~
	9.ii A pre-test inspection, a flow test, and a post-test inspection will be conducted on the as-built reactor internals.	9.ii No structural damage is observed in post-test inspections.
10. The Class 1E equipment identified in Table 2.4.1-1 as being qualified for a harsh environment ~~is designed to~~can withstand the environmental conditions that would exist before, during, and following a design basis accident ~~event~~ without loss of safety function for the time required to perform the safety function.	10.i Type tests ~~and/~~or a combination of type tests and analyses using the design environmental conditions, or under conditions which bound the design environmental conditions, will be performed on Class 1E equipment identified in Table 2.4.1-1 as being qualified for ~~located in~~ a harsh environment.	10.i ~~The results of the type tests and/or analyses~~A report exists and concludes that the Class 1E equipment identified in Table 2.4.1-1 as being qualified for a harsh environment can withstand the environmental conditions that would exist before, during, and following a design basis ~~event~~ accident without loss of safety function for the time required to perform the safety function.
	10.ii Inspection~~s~~ will be performed ~~on~~ of the as-built Class 1E equipment identified in Table 2.4.1-1 as being qualified for a harsh environment and the associated wiring, cables, and terminations located in a harsh environment.	10.ii The as-built Class 1E equipment and the associated wiring, cables, and terminations identified in Table 2.4.1-1 as being qualified for a harsh environment are bounded by type tests ~~and/~~or a combination of type tests and analyses.
11. ~~The~~ Class 1E equipment, identified in Table 2.4.1-1, is powered from ~~their~~ its respective Class 1E division.	11. A test will be performed on each division of the as-built Class 1E equipment identified in Table 2.4.1-1 by providing a simulated test signal only in the Class 1E division under test.	11. The simulated test signal exists at the as-built Class 1E equipment identified in Table 2.4.1-1 under test.
12. Separation is provided between redundant ~~the Class 1E~~ divisions of reactor system Class 1E ~~for the equipment~~	12. Inspections of the as-built Class 1E divisional cables will be performed.	12. Physical separation or electrical isolation is provided in accordance with RG 1.75, between the as-built cables of

~~identified in Table 2.4.1-1~~cables, ~~as~~ and between Class 1E~~/qualified~~ cables and non-Class 1E ~~divisions~~cables.		redundant reactor system Class 1E divisions and between Class 1E ~~divisions~~ cables and non-Class 1E cables.

Table 2.4.1-2 Reactor System Inspections, Tests, Analyses, and Acceptance Criteria (Sheet 4 of 4)

Design Commitment	Inspections, Tests, Analyses	Acceptance Criteria
13. Displays ~~of the parameters~~ identified in Table-2.4.1-1 ~~can be retrieved~~are provided in the MCR.	13. Inspection~~s~~ will be performed for retrievability of the ~~reactor system parameters~~ displays identified in Table 2.4.1-1 in the as-built MCR.	13. ~~The d~~Displays identified in Table 2.4.1-1 can be retrieved in the as-built MCR.
14. Irradiation specimen guides are attached to the core barrel to hold capsules with material surveillance specimens.	14. Inspection of the as-built core barrel will be performed for attachment of the irradiation specimen guides and existence of surveillance capsules.	14. Irradiation specimen guides are attached to the as-built core barrel and a minimum of three as-built surveillance capsules are provided.

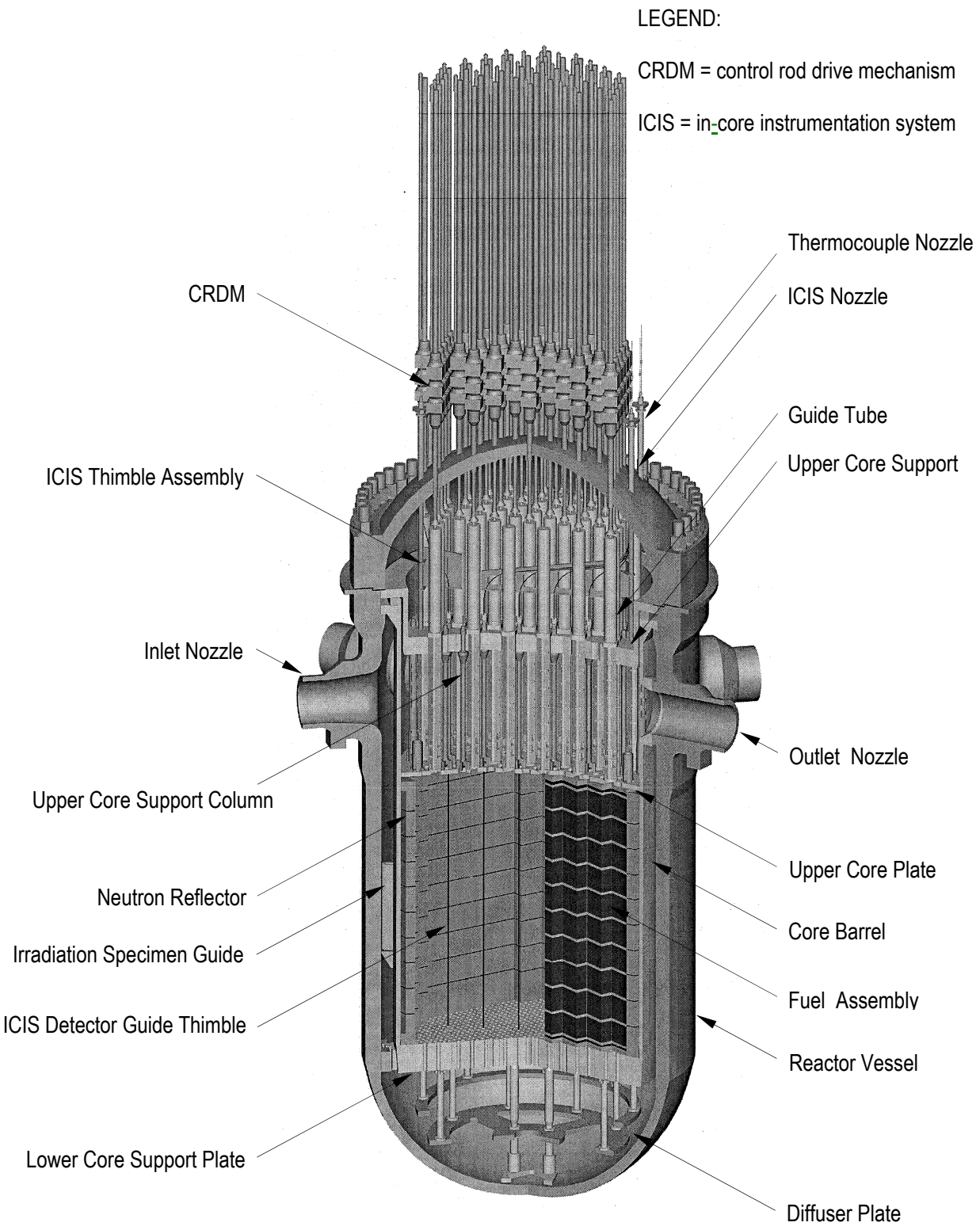

Figure 2.4.1-1 Reactor General Assembly

FF

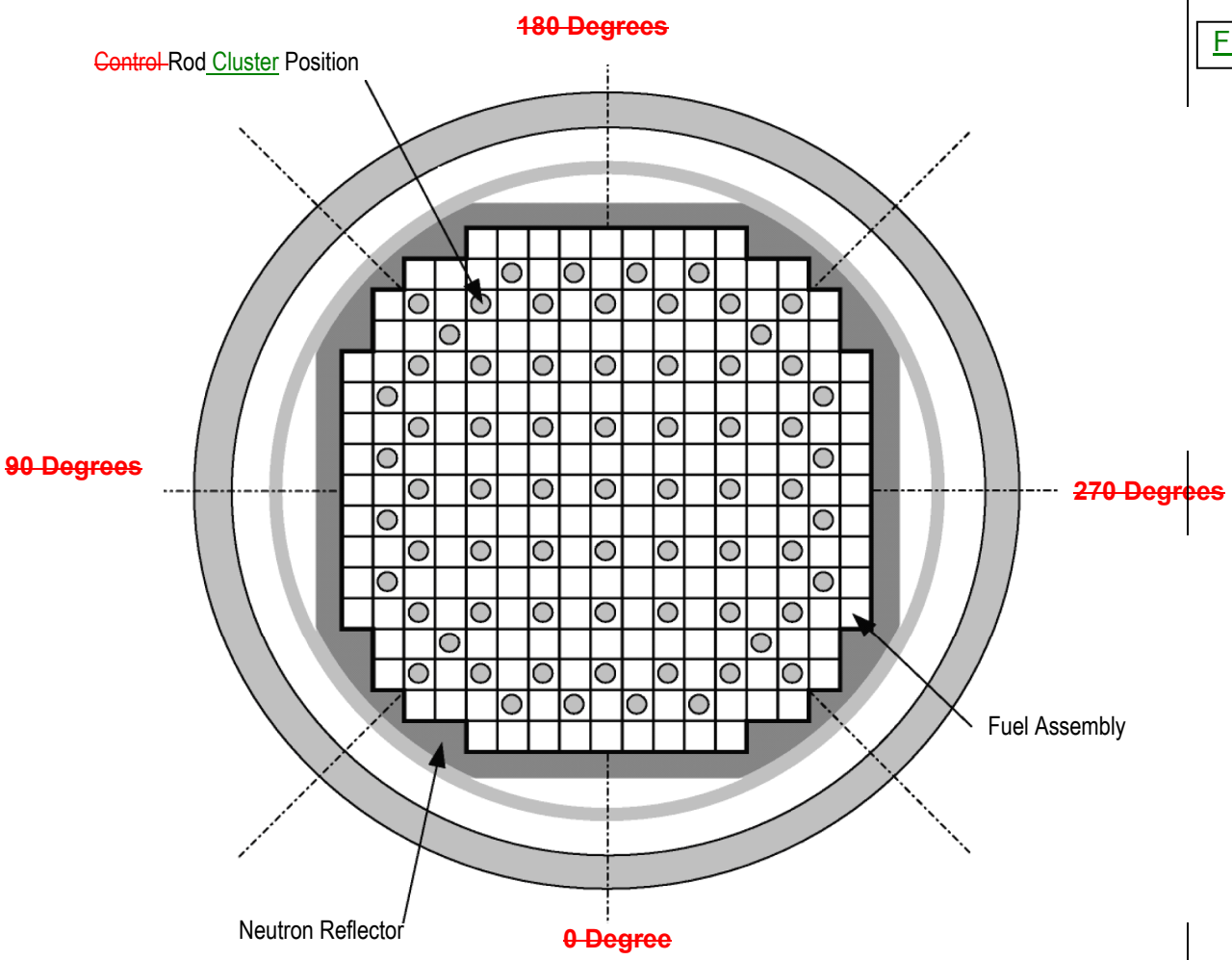

Figure 2.4.1-2 Arrangement of Fuel and Rod Cluster Control Assemblies

GG

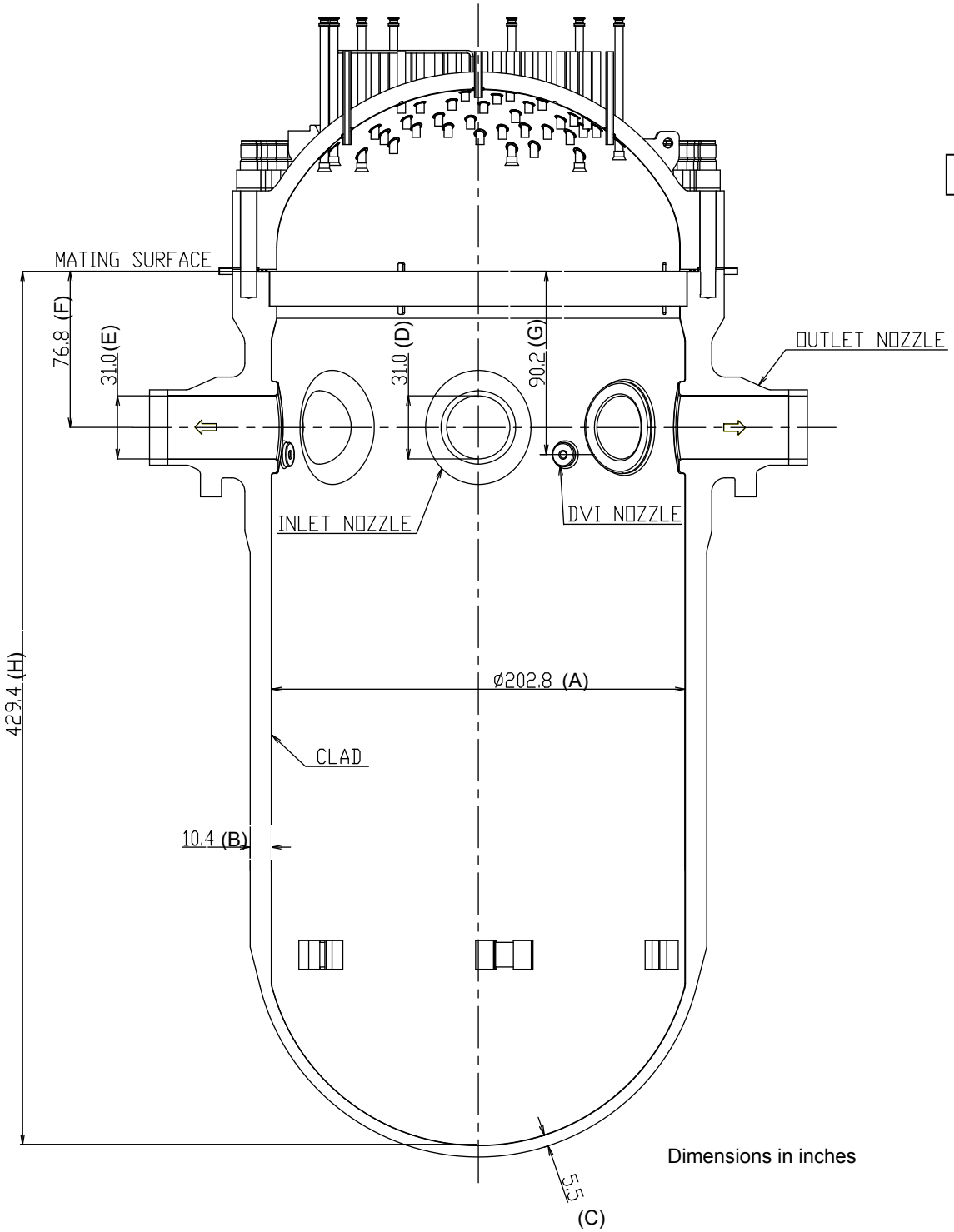

Figure 2.4.1-3 Reactor Vessel

2.4.2 Reactor Coolant System

2.4.2.1 Design Description

~~System Purpose and Functions~~

The purpose and primary function of the reactor coolant system (RCS) are to provide reactor cooling by transferring the heat generated in the reactor core to the secondary side of steam generators (SGs). A

The RCS is a safety-related system. Besides cooling the reactor core, the RCS's significant safety functions include the following;

- Forming the reactor coolant pressure boundary
- Providing ~~The pressurizer safety valves provide~~ overpressure protection via the pressurizer safety valves
- Providing~~The RCS provides~~ depressurization during ~~a~~ design bases events
- Providing~~RCPs have a rotating inertia to provide~~ coastdown flow by reactor coolant pump (RCPs) rotating inertia.

~~•The RCP flywheel can withstand a design overspeed condition~~

- Providing~~The RCS provides~~ the containment isolation function, as described in Subsection 2.11.2 of the piping that penetrates the containment.

~~Location and Functional Arrangement~~ B

~~Figure 2.4.2-1 and Figure 2.4.2-2 show the functional arrangement of the system. The locations of the major RCS components and piping are specified in Table 2.4.2-1.~~ C

As shown in ~~the f~~Figures 2.4.2-1 and 2.4.2-2, the major components of the RCS are four SGs, four RCPs, one pressurizer, and the reactor coolant piping and valves. (Note that the reactor vessel is addressed in Subsection 2.4.1.) D

Tables 2.4.2-2 and 2.4.2-3 provide information on design characteristics of system components and system piping, respectively.

1. Deleted E
2. The functional arrangement of the RCS is as described in the Design Description of Subsection 2.4.2.1 and in Table 2.4.2-1, and as shown in Figures 2.4.2-1 and 2.4.2-2. F

3.a The materials of construction of the ASME Code Section III components identified in Table 2.4.2-2 are in accordance with ASME Code requirements. G

3.b The materials of construction of the ASME Code Section III piping identified in Table 2.4.2-3 are in accordance with ASME Code requirements.

4.a.i The ASME Code Section III components of the RCS, identified in Table 2.4.2-2, are fabricated, installed and inspected in accordance with ASME Code Section III requirements.

4.a.ii The ASME Code Section III components of the RCS identified in Table 2.4.2-2 are reconciled with the design requirements.

4.b.i The ASME Code Section III piping of the RCS, including supports, identified in Table 2.4.2-3, is fabricated, installed, and inspected in accordance with ASME Code Section III requirements.

4.b.ii The ASME Code Section III piping of the RCS, including supports, identified in Table 2.4.2-3 are reconciled with the design requirements.

5.a Pressure boundary welds in ASME Code Section III components, identified in Table 2.4.2-2, meet ASME Code Section III requirements for non-destructive examination of welds.

5.b Pressure boundary welds in ASME Code Section III piping, identified in Table 2.4.2-3, meet ASME Code Section III requirements for non-destructive examination of welds.

6.a The ASME Code Section III components, identified in Table 2.4.2-2, retain their pressure boundary integrity at their design pressure.

6.b The ASME Code Section III piping, identified in Table 2.4.2-3, retains its pressure boundary integrity at its design pressure.

7. The seismic Category I equipment, identified in Table 2.4.2-2, can withstand seismic design basis loads without loss of safety function.

8. Each of the seismic Category I piping, including supports, identified in Table 2.4.2-3 can withstand seismic design basis loads without a loss of its safety function.

9.a The Class 1E equipment identified in Table 2.4.2-2 as being qualified for a harsh environment can withstand the environmental conditions that would exist before, during, and following a design basis accident without loss of safety function for the time required to perform the safety function.

9.b The Class 1E equipment, identified in Table 2.4.2-2, is powered from its respective Class 1E division.

9.c Separation is provided between redundant divisions of RCS Class 1E cables, and between Class 1E cables and non-Class 1E cables.

10.a The pressurizer safety valves identified in Table 2.4.2-2 provide overpressure protection in accordance with the ASME Code Section III. V

10.b Each RCP flywheel assembly can withstand a design overspeed condition. W

10.c RCPs have a rotating inertia to provide RCS flow coastdown on loss of power to the pumps. X

10.d The RCS provides circulation of coolant to remove heat from the reactor core. Y

10.e The RCS provides the means to control system pressure. Z

11.a Controls are provided in the MCR to open and close the remotely operated valves identified in Table 2.4.2-2. AA

11.b The remotely operated valves identified in Table 2.4.2-2 as having PSMS control perform an active safety function after receiving a signal from PSMS. BB

12.a The motor-operated valves, identified in Table 2.4.2-2, as having an active safety function to change position as indicated in the table. CC

12.b After loss of motive power, the remotely operated valves, identified in Table 2.4.2-2, assume the indicated loss of motive power position. DD

13.a Controls are provided in the MCR to start and stop the reactor coolant pumps identified in Table 2.4.2-4. EE

13.b The pumps identified in Table 2.4.2-2 as having PSMS control perform an active safety function after receiving a signal from PSMS. FF

14. Alarms and displays identified in Table 2.4.2-4 are provided in the MCR. GG

15. Alarms, displays and controls identified in Table 2.4.2-4 are provided in the RSC. HH

16. Each of the as-built piping identified in Table 2.4.2-3 as designed for LBB meets the LBB criteria, or an evaluation is performed of the protection from the dynamic effects of a rupture of the piping. II

17. Controls are provided in the MCR to start and stop the pressurizer heaters identified in Table 2.4.2-4. JJ

~~**Key Design Features**~~ KK

~~The key design features of the RCS are as follows.~~

~~The SGs are vertical shell U-tube evaporators with integral moisture separating equipment. Reactor coolant enters the channel head via the coolant inlet nozzle, flows through the inverted U-tubes, transferring heat from the primary side to the secondary side, and leaves from the channel head via the coolant outlet nozzle. Feedwater enters~~ LL

~~the steam generator at an elevation above the top of the U-tubes through a feedwater nozzle. Steam generated on the secondary side, flows upward, and exits through the outlet nozzle at the top of the vessel.~~

~~The RCPs are vertical mixed flow type pumps driven by a three-phase induction motor mounted above the pump. A flywheel attached to the motor provides additional inertia, thereby preventing a rapid reduction in reactor coolant flow during loss of power. The pump suction is located at the bottom of the pump and the discharge is on the side.~~ MM

~~The pressurizer, a vertically-oriented cylindrical vessel with hemispherical top and bottom heads, maintains liquid and vapor in equilibrium under saturated conditions for pressure control. Electrical immersion heaters are installed vertically through the bottom head of the vessel while the nozzles such as spray nozzle and safety valve nozzle are located in the top head of the vessel. The surge line, which is attached to the bottom of the pressurizer, connects to the hot leg of a reactor coolant loop.~~ NN

~~Pressurizer safety valves provide overpressure protection for the RCS.~~ OO

~~The reactor vessel head vent valves, the safety depressurization valve and depressurization valves could be used for high point vents.~~ PP

~~The RCS is designed to provide containment isolation of the piping penetrating the containment.~~ QQ

~~**Seismic and ASME Code Classifications**~~ RR

~~System components meet the seismic category requirements identified in Table 2.4.2-2. System components are designed and constructed to ASME Code Section III requirements identified in this table.~~ SS

~~System piping meets the seismic category requirements identified in Table 2.4.2-3. System piping is designed and constructed to ASME Code Section III requirements identified in this table.~~ TT

~~Pressure boundary welds in ASME Code Section III components and piping meet ASME Code Section III requirements.~~ UU

~~The materials of construction for RCS components and piping are as follows:~~ VV

- ~~Major components of the SGs are made of low-alloy steel, with the inner surfaces exposed to reactor coolant clad with stainless steel or nickel-chrome-iron alloy. The tube material is alloy 690 thermally treated.~~
- ~~All parts of RCPs in contact with reactor coolant are stainless steel, except for seals, bearings, and special parts.~~
- ~~The pressurizer is constructed of low-alloy steel with stainless steel cladding on all surfaces exposed to reactor coolant.~~

- ~~The reactor coolant piping (hot leg, cold leg and cross-over leg) is stainless steel. Other RCS piping such as the pressurizer surge line, pressurizer spray lines and connecting lines to other systems are also stainless steel.~~

~~**System Operation**~~

~~There is no realignment of RCS except for containment isolation valves (CIVs) following an actuation signal.~~ WW

~~**Alarms, Displays, and Controls**~~

~~Table 2.4.2-4 identifies alarms, displays, and controls associated with the RCS that are located in the MCR and on the remote shutdown console (RSC).~~ XX

~~**Logic**~~

~~RCPs trip in response to an emergency core cooling system (ECCS) actuation signal coincident with a reactor trip (P-4) signal.~~ YY

~~**Interlocks**~~

~~There are no interlocks needed for direct safety functions related to the RCS.~~ ZZ

~~**Class 1E Electrical Power Sources and Divisions**~~

~~The RCS equipment identified in Table 2.4.2-2 as Class 1E is powered from their respective Class 1E divisions, and separation is provided between Class 1E divisions, and between Class 1E divisions and non-Class 1E cable.~~ AAA

~~**Equipment to be Qualified for Harsh Environments**~~

~~The equipment identified in Table 2.4.2-2 as being qualified for a harsh environment can withstand the environmental conditions that would exist before, during, and following a design basis event without loss of safety function for the time required to perform the safety function.~~ BBB

~~**Interface Requirements**~~

~~There are no safety-related interfaces with systems outside of the certified design.~~ CCC

~~**Numeric Performance Values**~~

~~When necessary to demonstrate satisfaction of a design commitment, numeric performance values for selected components have been specified as ITAAC acceptance criteria in Table 2.4.2-5.~~ DDD

2.4.2.2 Inspections, Tests, Analyses, and Acceptance Criteria

Table 2.4.2-5 describes the ITAAC for the RCS.

The ITAAC associated with the RCS equipment, components, and piping and that comprise a portion of the CIS are described in Table 2.11.2-2.

Table 2.4.2-1 Reactor Coolant System Location of Equipment and Piping

System and Components	Location
Pressurizer	Containment
Steam generators	Containment
Reactor coolant pumps	Containment
Pressurizer piping upstream of and including the pressurizer safety valves RCS-SRV-120,121,122,123, safety depressurization valves RCS-MOV-117A,B, and depressurization valves RCS-MOV-119	Containment
Reactor vessel head vent piping upstream of and including the reactor vessel head vent valves RCS-MOV-003A,B	Containment
Pressurizer piping downstream of and excluding pressurizer safety valves	Containment
Pressurizer piping downstream of and excluding safety depressurization valves	Containment
Pressurizer piping downstream of and excluding depressurization valves	Containment
Reactor vessel head vent line piping downstream of and excluding the reactor vessel head vent valves	Containment
Reactor coolant piping drain piping upstream of and including the second drain stop valve RCS-VLV-023A,B,C,D	Containment
Reactor coolant piping	Containment
Pressurizer surge line piping	Containment
Pressurizer spray line piping	Containment

Table 2.4.2-2 Reactor Coolant System Equipment Characteristics (Sheet 1 of 4)

Equipment Name	Tag No.	ASME Code Section III Class	Seismic Category I	Remotely Operated Valve	Class 1E/ Qual. for Harsh Envir.	PSMS Control	Active Safety Function	Loss of Motive Power Position
Reactor coolant pumps	RCS-MPP-001 A, B, C, D	1	Yes	—	No/No	ECCS Actuation coincident with RT (P-4)	Stop	—
Pressurizer	RCS-MTK-002	1	Yes	—	—/—	—	—	—
SG (primary side)	RCS-MHX-001 A, B, C, D	1	Yes	—	—/—	—	—	—
SG (secondary side)		2				—		—
Pressurizer safety valves	RCS-SRV-120,121,122,123	1	Yes	—	—/—	—	Transfer Open/ Transfer Closed	—
Safety depressurization valves	RCS-MOV-117 A, B	1	Yes	Yes	Yes/Yes	Remote Manual	Transfer Open/ Transfer Closed	As Is
SDV block Valves	RCS-MOV-116 A, B	1	Yes	Yes	Yes/Yes	Remote Manual	Transfer Open/ Transfer Closed	As Is
Depressurization valves	RCS-MOV-118	1	Yes	Yes	Yes/Yes	—	—	As Is
Depressurization valves	RCS-MOV-119	1	Yes	Yes	Yes/Yes	—	—	As Is

Table 2.4.2-2 Reactor Coolant System Equipment Characteristics (Sheet 2 of 4)

Equipment Name	Tag No.	ASME Code Section III Class	Seismic Category I	Remotely Operated Valve	Class 1E/ Qual. for Harsh Envir.	PSMS Control	Active Safety Function	Loss of Motive Power Position
Pressurizer spray valves	RCS-PCV-061 A, B	1	Yes	Yes	No/No	—	—	Closed
Pressurizer spray block valves	RCS-MOV-111 A, B	1	Yes	Yes	No/No	—	—	As Is
Pressurizer spray bypass valves	RCS-VLV-112 A, B	1	Yes	No	—/—	—	—	—
Letdown line stop valve	RCS-VLV-021	1	Yes	No	—/—	—	—	—
Reactor Coolant Piping First Drain Stop Valves	RCS-VLV-022 A, B, C, D	1	Yes	No	—/—	—	—	—
Reactor Coolant Piping Second Drain Stop Valves	RCS-VLV-023 A, B, C, D	1	Yes	No	—/—	—	—	—
Cavity/RCS water level meter line stop valve	RCS-VLV-024, 025	1	Yes	No	—/—	—	—	—
Reactor Vessel Head Vent First Valves	RCS-MOV-002 A, B,	1	Yes	Yes	Yes/Yes	Remote Manual	Transfer Open/ Transfer Closed	As Is
Reactor Vessel Head Vent Second Valves	RCS-MOV-003 A, B	1	Yes	Yes	Yes/Yes	Remote Manual	Transfer Open/ Transfer Closed	As Is
Reactor Coolant Flow	RCS-FT-022, 023, 024, 025, 032, 033, 034, 035, 042, 043, 044, 045, 052, 053, 054, 055	—	Yes	—	Yes/Yes(1)	—	—	—

Table 2.4.2-2 Reactor Coolant System Equipment Characteristics (Sheet 3 of 4)

Equipment Name	Tag No.	ASME Code Section III Class	Seismic Category I	Remotely Operated Valve	Class 1E/ Qual. for Harsh Envir.	PSMS Control	Active Safety Function	Loss of Motive Power Position
Pressurizer Water Level	RCS-LT-061, 062, 063, 064	—	Yes	—	Yes/Yes	—	—	—
Reactor Coolant Pressure	RCS-PT-020, 030, 040, 050	—	Yes	—	Yes/Yes	—	—	—
Pressurizer Pressure	RCS-PT-061, 062, 063, 064	—	Yes	—	Yes/Yes	—	—	—
Reactor Coolant Hot Leg Temperature (Wide Range)	RCS-TE-020, 030, 040, 050	—	Yes	—	Yes/Yes	—	—	—
Reactor Coolant Cold Leg Temperature (Wide Range)	RCS-TE-025, 035, 045, 055	—	Yes	—	Yes/Yes	—	—	—
Reactor Coolant Hot Leg Temperature (Narrow Range)	RCS-TE-021A, 021B, 021C, 031A, 031B, 031C, 041A, 041B, 041C, 051A, 051B, 051C	—	Yes	—	Yes/Yes	—	—	—
Reactor Coolant Hot Leg Temperature (Narrow Range) (spare)	RCS-TE-023A, 023B, 023C, 033A, 033B, 033C, 043A, 043B, 043C, 053A, 053B, 053C	—	Yes	—	Yes/Yes	—	—	—
Reactor Coolant Cold Leg Temperature (Narrow Range)	RCS-TE-021D, 031D, 041D, 051D	—	Yes	—	Yes/Yes	—	—	—

Table 2.4.2-2 Reactor Coolant System Equipment Characteristics (Sheet 4 of 4)

Equipment Name	Tag No.	ASME Code Section III Class	Seismic Category I	Remotely Operated Valve	Class 1E/ Qual. for Harsh Envir.	PSMS Control	Active Safety Function	Loss of Motive Power Position
Reactor Coolant Cold Leg Temperature (Narrow Range) (spare)	RCS-TE-023D, 033D, 043D, 053D	—	Yes	—	Yes/Yes	—	—	—
Reactor Coolant Pump Speed	RCS-SE-028A, 038A, 048A, 058A	—	Yes	—	Yes/Yes(1)	—	—	—
Reactor Coolant Pump Speed (spare)	RCS-SE-028B, 038B, 048B, 058B	—	Yes	—	Yes/Yes(1)	—	—	—

NOTE:
Dash (-) indicates not applicable
1. Qualification for harsh environment is not required for post-accident environmental condition.

Table 2.4.2-3 Reactor Coolant System Piping Characteristics

Pipe Line Name	ASME Code Section III Class	Leak Before Break	Seismic Category I
Pressurizer piping upstream of and including the pressurizer safety valves RCS-SRV-120,121,122,123, safety depressurization valves RCS-MOV-117A,B, and depressurization valves RCS-MOV-119	1	No	Yes
Reactor vessel head vent piping upstream of and including the reactor vessel head vent valves RCS-MOV-003A,B	1	No	Yes
Pressurizer piping downstream of and excluding pressurizer safety valves RCS-SRV-120,121,122,123	—	No	No
Pressurizer piping downstream of and excluding safety depressurization valves RCS-MOV-117A,B	—	No	No
Pressurizer piping downstream of and excluding depressurization valves RCS-MOV-119	—	No	No
Reactor vessel head vent line piping downstream of and excluding the reactor vessel head vent valves RCS-MOV-003A,B	—	No	No
Reactor coolant piping drain piping upstream of and including the second drain stop valve RCS-VLV-023A,B,C,D	1	No	Yes
Reactor coolant piping	1	Yes	Yes
Pressurizer surge line piping	1	Yes	Yes
Pressurizer spray line piping	1	No	Yes

Note: Dash (-) indicates not applicable

Table 2.4.2-4 Reactor Coolant System Equipment Alarms, Displays, and Control Functions

Equipment/Instrument Name	MCR/RSC Alarm	MCR Display	MCR/RSC Control Function	RSC Display
Reactor Coolant Pump	No	Yes	Yes	Yes
Pressurizer Heaters	No	Yes	Yes	Yes
Pressurizer Safety Valve	No	Yes	No	Yes
Safety Depressurization Valve	No	Yes	Yes	Yes
SDV block valve	No	Yes	Yes	Yes
Depressurization Valve	No	Yes	Yes	Yes
Reactor Vessel Head Vent Valve	No	Yes	Yes	Yes
Reactor Coolant Flow RCS-FT-022,023,024,025, 032,033,034,035, 042,043,044,045, 052,053,054,055	Yes	No	No	No
Reactor Coolant Pump Speed RCS-SE-028A, 038A, 048A, 058A	Yes	No	No	No
Reactor Coolant Pump Speed (spare) RCS-SE-028B, 038B, 048B, 058B	—	—	—	—
Pressurizer Pressure RCS-PT-061,062,063,064	Yes	Yes	No	Yes
Pressurizer Water Level RCS-LT-061,062,063,064	Yes	Yes	No	Yes
Reactor Coolant Hot Leg Temperature (Wide Range) RCS-TE-020, 030, 040, 050	No	Yes	No	Yes
Reactor Coolant Cold Leg Temperature (Wide Range) RCS-TE-025, 035, 045, 055	No	Yes	No	Yes
Reactor Coolant Hot Leg Temperature (Narrow Range) RCS-TE-021A,B,C, 031A,B,C, 041A,B,C, 051A,B,C	—	—	—	—
Reactor Coolant Hot Leg Temperature (Narrow Range) (spare) RCS-TE-023A,B,C, 033A,B,C, 043A,B,C, 053A,B,C	—	—	—	—
Reactor Coolant Cold Leg Temperature (Narrow Range) RCS-TE-021D, 031D, 041D, 051D	—	—	—	—
Reactor Coolant Cold Leg Temperature (Narrow Range) (spare) RCS-TE-023D, 033D, 043D, 053D	—	—	—	—
Reactor Coolant Pressure RCS-PT-020, 030, 040, 050	No	Yes	No	Yes
Reactor Vessel Water Level RCS-LE-181,182	No	Yes	No	Yes

Note: Dash (-) indicates not applicable

Table 2.4.2-5 Reactor Coolant System Inspections, Tests, Analyses, and Acceptance Criteria (Sheet 1 of 7)

Design Commitment	Inspections, Tests, Analyses	Acceptance Criteria
1a. Deleted	1a. Deleted	1a. Deleted
1b. Deleted	1b. Deleted	1b. Deleted
2. The functional arrangement of the RCS is as described in the Design Description of Subsection 2.4.2.1 and in Table 2.4.2-1, and as shown ~~o~~in Figures 2.4.2-1 and 2.4.2-2.	2. ~~An i~~Inspection of the as-built RCS will be performed.	2. The as-built RCS conforms to the functional arrangement as described in the Design Description of ~~this~~ Subsection 2.4.2.1 and in Table 2.4.2-1, and as shown in Figures 2.4.2-1 and 2.4.2-2.
3a. The materials of construction of the ASME Code Section III components identified in Table 2.4.2-2 are in accordance with ASME Code requirements.	3a. Inspection~~s~~ of the certified material test reports for ASME Code Section III components identified in Table 2.4.2-2 will be performed.	3a. The materials of construction of the ASME Code Section III components identified in Table 2.4.2-2 are in accordance with ASME Code requirements.
3b. The materials of construction of the ASME Code Section III piping identified in Table 2.4.2-3 are in accordance with ASME Code requirements.	3b. Inspection~~s~~ of the certified material test reports for ASME Code Section III piping in Table 2.4.2-3 will be performed.	3b. The materials of construction of the ASME Code Section III piping identified in Table 2.4.2-3 are in accordance with ASME Code requirements.
4.a.i The ASME Code Section III components of the RCS, identified in Table 2.4.2-2, are fabricated, installed and inspected in accordance with ASME Code Section III requirements.	4.a.i ~~An i~~Inspection of the as-built ASME Code Section III components of the RCS, identified in Table 2.4.2-2, will be performed.	4.a.i The ASME Code Section III data report(s) (certified, when required by ASME Code) and inspection reports (including N-5 Data Reports where applicable) exist and conclude that the as-built ASME Code Section III components of the RCS identified in Table 2.4.2-2 are fabricated, installed, and inspected in accordance with ASME Code Section III requirements.

4.a.ii The ASME Code Section III components of the RCS identified in Table 2.4.2-2 are reconciled with the design requirements.	4.a.ii A reconciliation analysis of the components in Table 2.4.2-2 using as-designed and as-built information and ASME Code Section III design report(s) (NCA-3550) will be performed.	4.a.ii The ASME Code Section III design report(s) (certified, when required by ASME Code) exist and conclude that design reconciliation has been completed in accordance with the ASME Code, for the as-built ASME Code Section III components of the RCS identified in Table 2.4.2-2 ~~are reconciled with the design requirements~~. The report documents the results of the reconciliation analysis.

Table 2.4.2-5 Reactor Coolant System Inspections, Tests, Analyses, and Acceptance Criteria (Sheet 2 of 7)

Design Commitment	Inspections, Tests, Analyses	Acceptance Criteria
4.b.i The ASME Code Section III piping of the RCS, including supports, identified in Table 2.4.2-3, is fabricated, installed, and inspected in accordance with ASME Code Section III requirements.	4.b.i ~~An i~~Inspection of the as-built ASME Code Section III piping of the RCS, including supports, identified in Table 2.4.2-3, will be performed .	4.b.i The ASME Code Section III data report(s) (certified when required by ASME Code) and inspection reports (including N-5 Data Reports where applicable) exist and conclude that the as-built ASME Code Section III piping of the RCS, including supports, identified in Table 2.4.2-3 is fabricated, installed, and inspected in accordance with ASME Code Section III requirements.
4.b.ii The ASME Code Section III piping of the RCS, including supports, identified in Table 2.4.2-3 are reconciled with the design requirements.	4.b.ii A reconciliation analysis of the piping of the RCS, including supports, identified in Table 2.4.2-3, using as-designed and as-built information and ASME Code Section III design report(s) (NCA-3550) will be performed.	4.b.ii The ASME Code Section III design report(s) (certified, when required by ASME Code) exist and conclude that design reconciliation has been completed in accordance with the ASME Code, for the as-built ASME Code Section III piping of the RCS, including supports, identified in Table 2.4.2-3 ~~is reconciled with the design requirements~~. The report documents the results of the reconciliation analysis.
5.a Pressure boundary welds in ASME Code Section III components, identified in Table 2.4.2-2, meet ASME Code Section III requirements for non-destructive examination of welds.	5.a Inspections of the as-built pressure boundary welds in ASME Code Section III components identified in Table 2.4.2-2, will be performed in accordance with the ASME Code Section III.	5.a The ASME Code Section III code reports exist and conclude that the ASME Code Section III requirements are met for non-destructive examination of the as-built pressure boundary welds in ASME Code Section III components identified in Table 2.4.2-2.

5.b Pressure boundary welds in ASME Code Section III piping, identified in Table 2.4.2-3, meet ASME Code Section III requirements for non-destructive examination of welds.	5.b Inspections of the as-built pressure boundary welds in ASME Code Section III piping identified in Table 2.4.2-3 will be performed in accordance with the ASME Code Section III.	5.b The ASME Code Section III code reports exist and conclude that the ASME Code Section III requirements are met for non-destructive examination of the as-built pressure boundary welds in ASME Code Section III piping identified in Table 2.4.2-3.

Table 2.4.2-5 Reactor Coolant System Inspections, Tests, Analyses, and Acceptance Criteria (Sheet 3 of 7)

Design Commitment	Inspections, Tests, Analyses	Acceptance Criteria
6.a The ASME Code Section III components, identified in Table 2.4.2-2, retain their pressure boundary integrity at their design pressure.	6.a A hydrostatic test will be performed on the as-built components, identified in Table 2.4.2-2, required by the ASME Code Section III to be hydrostatically tested.	6.a ASME Code Data Report(s) exist and conclude that ~~T~~the results of the hydrostatic test of the as-built components identified in Table 2.4.2-2 as ASME Code Section III conform with the requirements of the ASME Code Section III.
6.b The ASME Code Section III piping, identified in Table 2.4.2-3, retains its pressure boundary integrity at its design pressure.	6.b A hydrostatic test will be performed on the as-built piping, identified in Table 2.4.2-3, required by the ASME Code Section III to be hydrostatically tested.	6.b ASME Code Data Report(s) exist and conclude that ~~T~~the results of the hydrostatic test of the as-built piping identified in Table 2.4.2-3 as ASME Code Section III conform to the requirements of the ASME Code Section III.
7.~~a~~ The seismic Category I equipment, identified in Table 2.4.2-2, can~~is designed to~~ withstand seismic design basis loads without loss of safety function.	7.~~a~~.i Inspections will be performed to verify that the seismic Category I as-built equipment identified in Table 2.4.2-2 is located in a seismic Category I structure~~the containment~~.	7.~~a~~.i The seismic Category I as-built equipment identified in Table 2.4.2-2 is located in a seismic Category I structure~~the containment~~.
	7.~~a~~.ii Type tests, analyses, or a combination of type tests and ~~and/or~~ analyses of seismic Category I equipment identified in Table 2.4.2-2 will be performed using analytical assumptions, or will be performed under conditions which bound the seismic design basis requirements.	7.~~a~~.ii A report exists and concludes~~The results of the type tests and/or analyses conclude~~ that the seismic Category I equipment identified in Table 2.4.2-2 can withstand seismic design basis loads without loss of safety function.
	7.~~a~~.iii Inspections and analyses will be performed to verify that the as-built seismic Category I equipment identified in Table 2.4.2-2, including anchorages, is seismically bounded by the tested or analyzed conditions~~on the as-built equipment including anchorage~~.	7.~~a~~.iii A report exists and concludes that ~~T~~the as-built seismic Category I equipment identified in Table 2.4.2-2, including anchorages, is seismically bounded by the tested or analyzed conditions.

8.~~i~~	~~Each of t~~The seismic Category I piping, including supports, identified in Table 2.4.2-3 can~~is designed to~~ withstand ~~combined normal and~~ seismic design basis loads without a loss of its safety function.	8.i	Inspections will be performed to verify that the as-built seismic Category I piping, including supports, identified in Table 2.4.2-3 is~~are~~ supported by a seismic Category I structure(s).	8.i ~~Reports(s) document that each of t~~The as-built seismic Category I piping, including supports, identified in Table 2.4.2-3 is supported by a seismic Category I structure(s).
		8.ii	Inspections and analyses will be performed to verify~~for the existence of a report verifying~~ that the as-built seismic Category I piping, including supports, identified in Table 2.4.2-3 can withstand ~~combined normal and~~ seismic design basis loads without a loss of its safety function.	8.ii A report exists and concludes that ~~each of~~ the as-built seismic Category I piping, including supports, identified in Table 2.4.2-3 can withstand ~~combined normal and~~ seismic design basis loads without a loss of its safety function.

Table 2.4.2-5 Reactor Coolant System Inspections, Tests, Analyses, and Acceptance Criteria (Sheet 4 of 7)

Design Commitment	Inspections, Tests, Analyses	Acceptance Criteria
9.a The Class 1E equipment identified in Table 2.4.2-2 as being qualified for a harsh environment can~~is designed to~~ withstand the environmental conditions that would exist before, during, and following a design basis accident~~event~~ without loss of safety function for the time required to perform the safety function.	9.a.i Type tests, ~~and/or analyses,~~ or a combination of type tests and analyses using the design environmental conditions or under the conditions which bound the design environmental conditions will be performed on the Class 1E equipment identified in Table 2.4.2-2 as being qualified for~~located in~~ a harsh environment.	9.a.i A report exists and concludes that ~~The results of the type tests, and/or analyses, or a combination of type tests and analyses conclude that~~ the Class 1E equipment identified in Table 2.4.2-2 as being qualified for a harsh environment can withstand the environmental conditions that would exist before, during, and following a design basis accident~~event~~ without loss of safety function for the time required to perform the safety function.
	9.a.ii Inspection~~s~~ will be performed of~~on~~ the as-built Class 1E equipment identified in table 2.4.2-2 as being qualified for a harsh environment and the associated wiring, cables, and terminations located in a harsh environment.	9.a.ii The as-built Class 1E equipment and the associated wiring, cables, and terminations identified in Table 2.4.2-2 as being qualified for a harsh environment are bounded by type tests, ~~and/or analyses,~~ or a combination of type tests and analyses.
9.b The Class 1E equipment, identified in Table 2.4.2-2, is powered from its~~their~~ respective Class 1E division.	9.b A test will be performed on each division of the as-built Class 1E equipment identified in Table 2.4.2-2 by providing a simulated test signal only in the Class 1E division under test.	9.b The simulated test signal exists at the as-built Class 1E equipment identified in Table 2.4.2-2 under test.
9.c Separation is provided between redundant divisions of RCS Class 1E cables~~divisions~~, and between Class 1E cables~~divisions~~ and non-Class 1E cables.	9.c Inspections of the as-built Class 1E divisional cables will be performed	9.c Physical separation or electrical isolation is provided in accordance with RG 1.75, between the as-built cables of redundant RCS Class 1E divisions and between Class 1E cables~~divisions~~ and non-Class 1E cables.

Table 2.4.2-5 Reactor Coolant System Inspections, Tests, Analyses, and Acceptance Criteria (Sheet 5 of 7)

Design Commitment	Inspections, Tests, Analyses	Acceptance Criteria
10.a The pressurizer safety valves identified in Table 2.4.2-2 provide overpressure protection in accordance with the ASME Code Section III.	10.a.i Inspections of the pressurizer safety valves identified in Table 2.4.2-2 will be conducted to confirm that the value of the vendor code name plate rating is greater than or equal to system relief requirements.	10.a.i The minimum capacity of each pressurizer safety valve identified in Table 2.4.2-2 is greater than or equal to 432,000 lb/hr.~~sum of the rated capacities recorded on the valve ASME Code plates of the as-built safety valves exceeds 1.728×10^6 lb/hr~~.
	10.a.ii Tests and analyses in accordance with ASME Code Section III of the pressurizer safety valves identified in Table 2.4.2-2 will be performed to confirm set pressure.	10.a.ii A report exists and concludes ~~The result of test and analysis conforms with~~ the following as-built pressurizer safety valves, identified in Table 2.4.2-2, set pressure; ≥ 2435 psig and ≤ 2485 psig
10.b Each RCP flywheel assembly can withstand a design overspeed condition.	10.b Tests of each as-built RCP flywheel assembly will be performed at overspeed conditions.	10.b ~~A report exists and concludes that e~~Each as-built RCP flywheel assembly can withstand an overspeed condition of no less than 125% of operating speed.
10.c RCPs have a rotating inertia to provide RCS flow coastdown on loss of power to the pumps.	10.c Tests ~~and/or analyses~~ will be performed ~~on the as-built~~to determine the RCP flow coastdown curve.	10.c The RCP flow coastdown provides RCS flows greater than or equal to the flow shown in Figure 2.4.2-3. ~~The rotating inertia of each as-built RCP is no less than 115,330 lb-ft^2.~~
10.d The RCS provides circulation of coolant through~~to remove heat from~~ the reactor core.	10.d Tests and analyses to measure RCS flow with the as-built four reactor coolant pumps operating at no-load RCS pressure and temperature conditions will be performed. Analyses will be performed to convert the measured pre-fuel load flow to post-fuel load flow with 10% steam generator tube plugging.	10.d A report exists and concludes that ~~T~~the calculated reactor coolant flow rate per loop with 10% steam generator plugging is at least 112,000 gallons per minute.

10.e The RCS provides the means to control system pressure.	10.e Inspections will be performed to verify the rated capacity of the as-built pressurizer heater backup groups A, B, C, and D.	10.e The as-built pressurizer heater backup groups A, B, C, and D each have~~has~~ a rated capacity of at least 120 kW.
11.a Controls are provided ~~exist~~ in the MCR to open and close the remotely operated valves identified in Table 2.4.2-2.	11.a Tests will be performed on the as-built remotely operated valves identified~~listed~~ in Table 2.4.2-2 using controls in the as-built MCR.	11.a Controls ~~exist~~ in the as-built MCR ~~to~~ open and close the as-built remotely operated valves identified~~listed~~ in Table 2.4.2-2.

Table 2.4.2-5 Reactor Coolant System Inspections, Tests, Analyses, and Acceptance Criteria (Sheet 6 of 7)

Design Commitment	Inspections, Tests, Analyses	Acceptance Criteria
11.b The remotely operated valves identified in Table 2.4.2-2 as having PSMS control perform an active safety function after receiving a signal from PSMS.	11.b Tests will be performed on the as-built remotely operated valves identified~~listed~~ in Table 2.4.2-2 using simulated signals.	11.b The as-built remotely operated valves identified in Table 2.4.2-2 as having PSMS control perform the active function identified in the table after receiving a simulated signal.
12.a The motor-operated valves, identified in Table 2.4.2-2, as having ~~perform~~ an active safety function to change position as indicated in the table.	12.a.i ~~Tests or t~~Type tests, or a combination of type tests and analyses, of the motor-operated valves identified in Table 2.4.2-2 will be performed that demonstrate the capability of the valve to operate under its design conditions.	12.a.i A report exists and concludes that ~~E~~each motor-operated valve changes position as indicated in Table 2.4.2-2 under design conditions.
	12.a.ii Tests of the as-built motor-operated valves identified in Table 2.4.2-2 will be performed under pre-operational flow, differential pressure, and temperature conditions.	12.a.ii Each as-built motor operated valve changes position as identified ~~ndicated~~ in Table 2.4~~7.1~~.2-2 under preoperational test conditions.
	12.a.iii Inspections will be performed of the as-built motor-operated vales identified in Table 2.4.2-2.	12.a.iii Each as-built motor-operated valve identified in Table 2.4.2-2 is bounded by the type tests, or a combination of the type tests and analyses.
12.b After loss of motive power, the remotely operated valves, identified in Table 2.4.2-2, assume the indicated loss of motive power position.	12.b Tests of the as-built remotely operated valves identified in Table 2.4.2-2 will be performed under the conditions of loss of motive power.	12.b Upon loss of motive power, each as-built remotely operated valve identified in Table 2.4.2-2 assumes the indicated loss of motive power position.
13.a Controls are provided~~exist~~ in the MCR to start and stop the reactor coolant pumps identified in Table 2.4.2-4.	13.a Tests will be performed on the as-built reactor coolant pumps identified in Table 2.4.2-4 using controls in the as-built MCR.	13.a Controls ~~exist~~ in the as-built MCR ~~to~~ start and stop the as-built reactor coolant pumps identified~~listed~~ in Table 2.4.2-4.

13.b The pumps identified in Table 2.4.2-2 as having PSMS control perform an active safety function after receiving a signal from PSMS.	13.b Tests will be performed on the as-built pumps ~~listed~~identified in Table 2.4.2-2 using simulated signals.	13.b The as-built pumps identified in Table 2.4.2-2 as having PSMS control perform the active function identified in the table after receiving a simulated signal.
14. ~~MCR a~~Alarms and displays ~~of the parameters~~ identified in Table 2.4.2-4 are provided ~~can be retrieved~~ in the MCR.	14. Inspection~~s~~ will be performed for retrievability of the alarms and displays identified ~~RCS parameters~~ in Table 2.4.2-4 in the as-built MCR.	14. ~~MCR a~~Alarms and displays identified in Table 2.4.2-4 can be retrieved in the as-built MCR.

Table 2.4.2-5 Reactor Coolant System Inspections, Tests, Analyses, and Acceptance Criteria (Sheet 7 of 7)

Design Commitment	Inspections, Tests, Analyses	Acceptance Criteria
15. ~~RSC a~~Alarms, displays and controls ~~are~~ identified in Table 2.4.2-4 are provided in the RSC.	15.i Inspection~~s~~ will be performed for retrievability of the ~~as-built RSC~~ alarms and~~,~~ displays ~~and controls~~ identified in Table 2.4.2-4 in the as-built RSC ~~will be performed~~.	15.i Alarms and~~,~~ displays ~~and controls exist on~~ identified in Table 2.4.2-4 can be retrieved in the as-built RSC ~~as identified in Table 2.4.2-4~~.
	15.ii Tests of the as-built RSC control functions identified in Table 2.4.2-4 will be performed.	15.ii Controls ~~exist to operate each~~ in the as-built RSC operate the as-built equipment~~component control function~~ identified in Table 2.4.2-4 with an RSC control function.
16. Each of the as-built piping identified in Table 2.4.2-3 as designed for LBB meets the LBB criteria, or an evaluation is performed of the protection from the dynamic effects of a rupture of the piping.	16. Inspections of the as-built piping identified in Table 2.4.2-3 will be performed based on the evaluation report for LBB or for the evaluation of the protection from dynamic effects of a pipe break, as specified in Section 2.3.	16. An ~~The~~ LBB evaluation report exists and concludes that the LBB acceptance criteria are met by the as-built piping identified in Table 2.4.2-3 and piping materials, or a pipe break hazards analyses report exists and concludes that~~the~~ protection ~~is provided for~~from the dynamic effects of a line ~~the piping~~ break is provided.
17. Controls are provided~~exist~~ in the MCR to start and stop the pressurizer heaters identified in Table 2.4.2-4.	17. Tests will be performed on the as-built pressurizer heaters identified~~listed~~ in Table 2.4.2-4 using controls in the as-built MCR.	17. Controls ~~exist~~ in the as-built MCR ~~to~~ start and stop the as-built pressurizer heaters identified in Table 2.4.2-4.

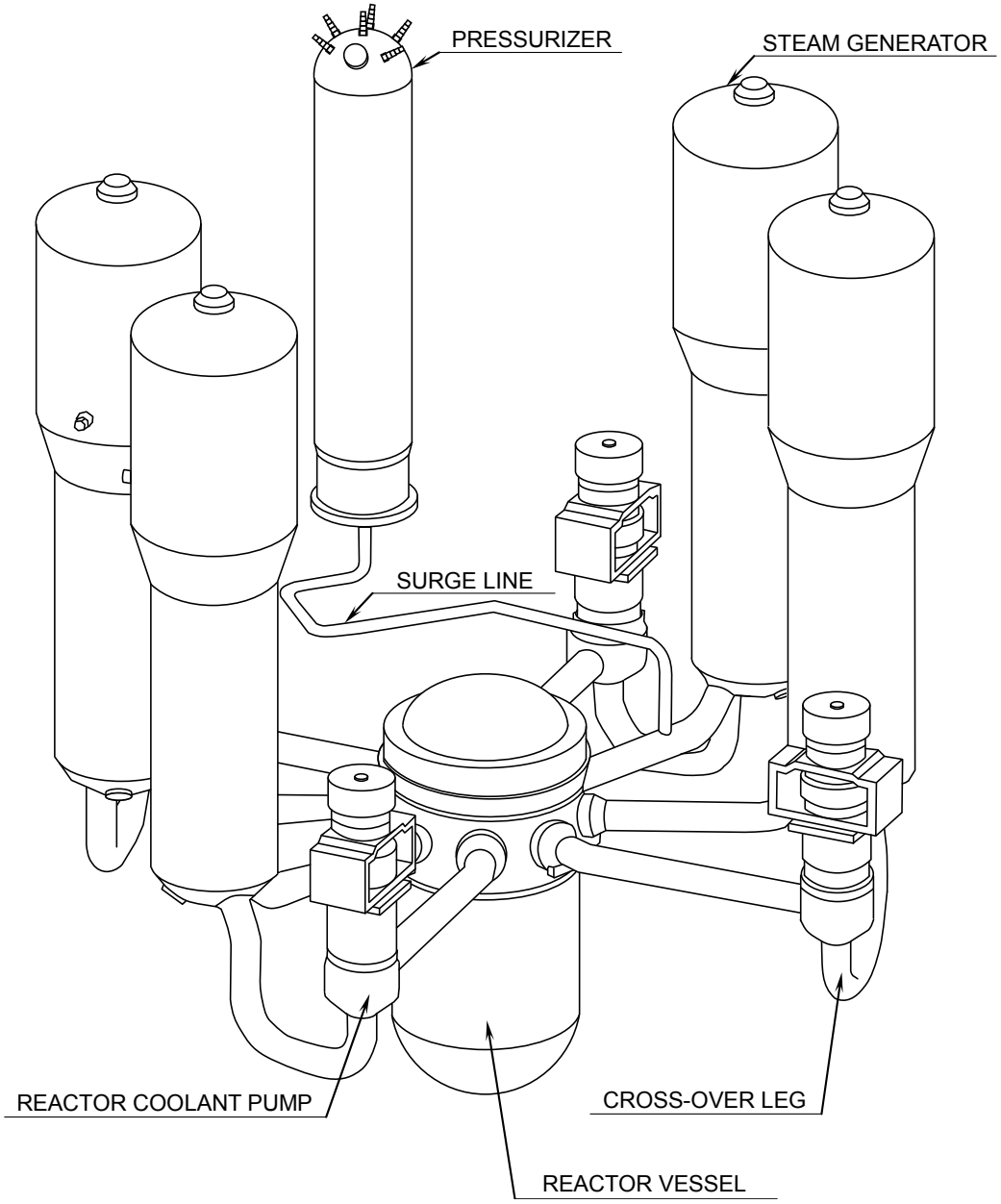

Figure 2.4.2-1 Isometric View of the Reactor Coolant System

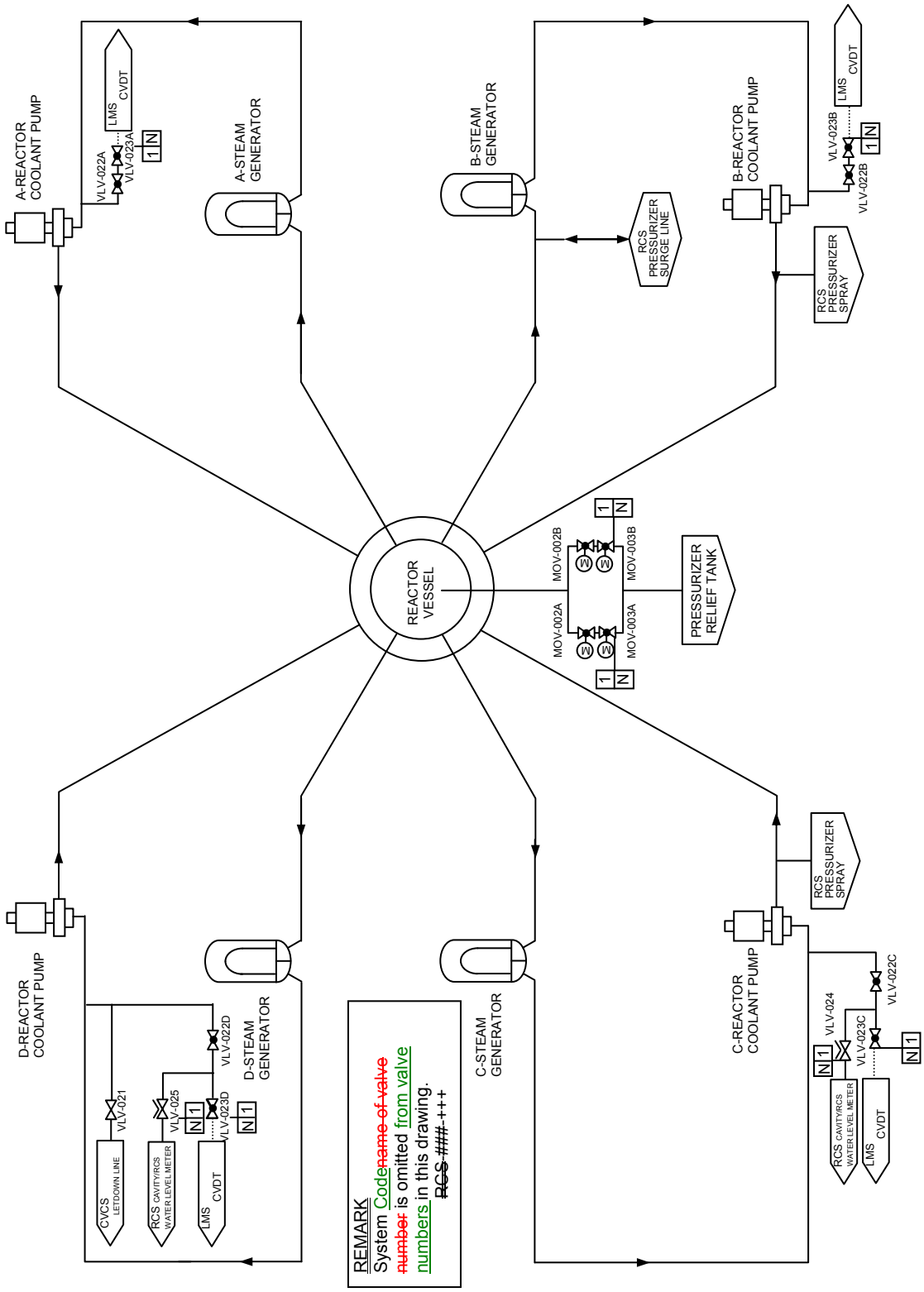

Figure 2.4.2-2 Reactor Coolant System (Sheet 1 of 2)

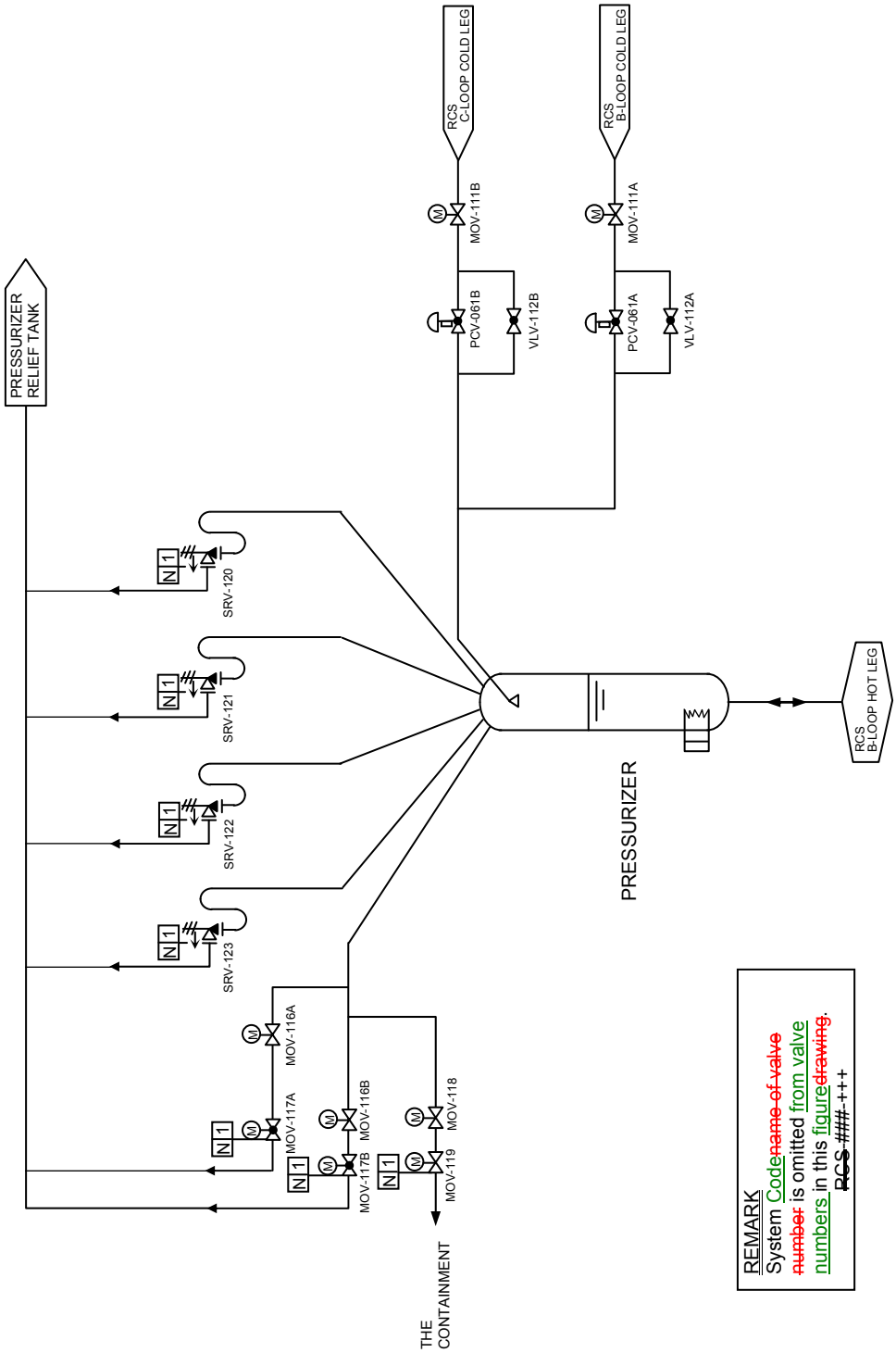

Figure 2.4.2-2 Reactor Coolant System (Sheet 2 of 2)

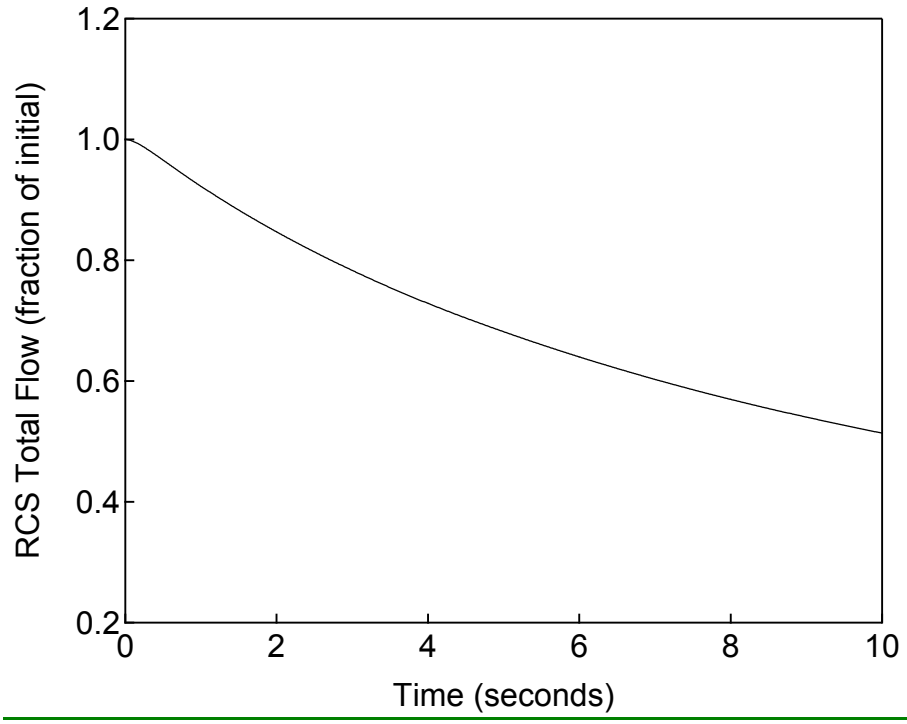

Figure 2.4.2-3 RCS Total Flow versus Time

Complete Loss of Forced Reactor Coolant Flow

2.4 REACTOR SYSTEMS

2.4.3 Loose Parts Monitoring System

2.4.3.1 Design Description

~~**System Purpose and Functions**~~

The nonsafety-related loose parts monitoring system (LPMS) provides early detection of loose metallic parts in the RCS. The system is an automatic detection system and contains multiple redundant instrumentation channels. Each channel includes a field mounted sensor, preamplifier, signal processing equipment and signal recorder. The LPMS actuates audible and visual alarms in the MCR if a signal exceeds the preset alarm level. A

The sensors are strategically located at fixed positions on the RCS to maximize positive impact detection. These positions include the upper and lower plenums of RV and the inlet plenum of each steam generator, which provides broad coverage. Two redundant sensors are mounted at each location and their associated instrument channels are physically separated from each other.~~The purpose and function of the loose parts monitoring system (LPMS) is to detect loose metallic parts in the RCS before damage occurs. This system has non safety-related functions.~~ B C

~~**Location and Functional Arrangement**~~

~~The LPMS is located within the containment, with its alarms and displays located in the MCR. The system sensors are installed at fixed positions on the reactor coolant system where loose parts are likely to gather. These areas include the upper and lower head plenums of the reactor vessel and the inlet plenum of each steam generator.~~ D

~~**Key Design Features**~~

~~Each LPMS instrumentation channel consists of a sensor, signal conditioning, and processing equipment and signal recorder. LPMS equipment inside the containment is designed to remain functional through an earthquake of a magnitude equal to half of the calculated SSE. The system activates and operates automatically. Data obtained from the loose parts monitoring sensors can be retrieved in the MCR. The LPMS actuates audible and visual alarms in the MCR if a signal exceeds the preset alarm level.~~ E

1. The functional arrangement of the LPMS is as described in the Design Description of Subsection 2.4.3.1. F

2. Alarms and data from the LPMS are provided in the MCR. G

2.4.3.2 Inspections, Tests, Analyses, and Acceptance Criteria

Table 2.4.3-1 describes the ITAAC for the LPMS.

Table 2.4.3-1 Loose Parts Monitoring System Inspections, Tests, Analyses, and Acceptance Criteria

Design Commitment	Inspections, Tests, Analyses	Acceptance Criteria
1. The functional arrangement of the LPMS is as described in the Design Description of Subsection 2.4.3.1.	1. Inspections of the as-built system will be performed.	1. The as-built LPMS conforms to the functional arrangement described in the Design Description of Subsection 2.4.3.1.
2. ~~MCR a~~Alarms and ~~displays~~ data from the LPMS are provided ~~for the LPMS are defined~~ in ~~Subsection 2.4.3.1~~the MCR.	2. Inspections will be performed on the ~~MCR alarms and displays for the~~ as-built LPMS.	2. The as-built LPMS alarms, and ~~displays exist or~~ data from the LPMS sensors, can be retrieved in the as-built MCR ~~as defined in Subsection 2.4.3.1~~.

2.4.4 Emergency Core Cooling System

2.4.4.1 Design Description

~~System Purpose and Functions~~

The primary purpose of the ECCS is to remove stored energy and fission product decay heat from the reactor core following an accident. Four important functions of this safety-related system are to ensure that (1) fuel cladding temperature, oxidation and hydrogen production limits are not exceeded, (2) "coolable" core geometry is maintained, (3) long-term core cooling is available, and (4) the ECCS is capable of providing the containment isolation function, as described in Section 2.11.2, for piping penetrating the containment.

In combination with control rod insertion, the ECCS is designed to shut down and cool the reactor during the following accidents:

- LOCAs,
- Ejection of a control rod cluster assembly,
- Secondary steam system piping failure,
- Inadvertent operating of main steam relief or safety valve, and
- Steam generator tube failure.

A

The ECCS includes four 50%-capacity safety injection pump divisions.

B

The ECCS has the following functions:

Accumulator injection - The accumulator system stores borated water under pressure and automatically injects it into the RCS if the reactor coolant pressure decreases below the accumulator pressure.

High head injection - The high-head injection system takes suction from the RWSP and delivers borated water to the safety injection nozzles on the reactor vessel or to the hot legs of the RCS.

Emergency letdown - The emergency letdown system can be utilized to achieve a cold shutdown boration level in the RCS by directing reactor coolant to the RWSP and providing borated water from the RWSP to the RCS via the safety injection pumps.

Containment pH control - Sodium tetraborate decahydrate (NaTB) contained in baskets provides adjustment of the pH of the water in the containment following an accident. The pH adjustment maintains the desired post-accident pH conditions in the containment water, to enhance the iodine retention capacity in the containment and to avoid stress corrosion cracking of the austenitic stainless steel components.

1.a The functional arrangement of the ECCS is as described in the Design Description of Subsection 2.4.4.1 and in Table 2.4.4-1 and as shown in Figure 2.4.4-1. C

1.b Each mechanical division of the ECCS (Divisions A, B, C & D) is physically separated from the other divisions with the exception of inside the containment so as not to preclude accomplishment of the safety function. D

2.a.i The ASME Code Section III components of the ECCS identified in Table 2.4.4-2 are fabricated, installed and inspected in accordance with ASME Code Section III requirements. E

2.a.ii The ASME Code Section III components of the ECCS identified in Table 2.4.4-2 are reconciled with the design requirements. F

2.b.i The ASME Code Section III piping of the ECCS, including supports, identified in Table 2.4.4-3, is fabricated, installed, and inspected in accordance with ASME Code Section III requirements. G

2.b.ii The ASME Code Section III piping of the ECCS, including supports, identified in Table 2.4.4-3 are reconciled with the design requirements. H

3.a Pressure boundary welds in ASME Code Section III components, identified in Table 2.4.4-2, meet ASME Code Section III requirements for non-destructive examination of welds. I

3.b Pressure boundary welds in ASME Code Section III piping, identified in Table 2.4.4-3, meet ASME Code Section III requirements for non-destructive examination of welds. J

4.a The ASME Code Section III components, identified in Table 2.4.4-2, retain their pressure boundary integrity at their design pressure. K

4.b The ASME Code Section III piping, identified in Table 2.4.4-3, retains its pressure boundary integrity at its design pressure. L

5.a The seismic Category I equipment, identified in Table 2.4.4-2, is designed to withstand seismic design basis loads without loss of safety function. M

5.b The seismic Category I piping, including supports, identified in Table 2.4.4-3 can withstand seismic design basis loads without a loss of its safety function. N

6.a The Class 1E equipment identified in Table 2.4.4-2 as being qualified for a harsh environment can withstand the environmental conditions that would exist before, O

during, and following a design basis accident without loss of safety function for the time required to perform the safety function.

6.b The Class 1E equipment, identified in Table 2.4.4-2, is powered from its respective Class 1E division. P

6.c Separation is provided between redundant divisions of ECCS Class 1E cables, and between Class 1E cables and non-Class 1E cables. Q

7.a Deleted. R

7.b The ECCS provides RCS makeup, boration, and safety injection during design basis events. S

7.c The ECCS provides pH adjustment of water flooding the containment following design basis accidents. T

7.d The safety injection pumps have sufficient net positive suction head (NPSH). U

8. Controls are provided in the MCR to open and close the remotely operated valves identified in Table 2.4.4-2. V

9.a The motor-operated, air-operated and check valves, identified in Table 2.4.4-2 as having an active safety function, perform an active safety function to change position as indicated in the table. W

9.b After loss of motive power, the remotely operated valves, identified in Table 2.4.4-2, assume the indicated loss of motive power position. X

10.a Controls are provided in the MCR to start and stop the safety injection pumps identified in Table 2.4.4-4. Y

10.b The pumps identified in Table 2.4.4-4 start after receiving an ECCS actuation signal. Z

10.c A confirmatory-open interlock is provided to automatically open the accumulator discharge valve upon the receipt of an ECCS actuation signal or an above low pressurizer pressure (P11) setpoint signal. AA

11. Alarms and displays identified in Table 2.4.4-4 are provided in the MCR. BB

12. Alarms, displays and controls identified in Table 2.4.4-4 are provided in the RSC. CC

13. The as-built piping identified in Table 2.4.4-3 as designed for LBB meets the LBB criteria, or an evaluation is performed of the protection from the dynamic effects of a rupture of the line. DD

14.a Deleted EE

14.b Deleted FF

~~**Location and Functional Arrangement**~~ GG

~~The location and functional arrangement of ECCS equipment and piping is shown on Figure 2.4.4-1. Table 2.4.4-1 also provides a tabulation of the location of ECCS equipment. The equipment, piping and valves of ECCS are located within the containment or reactor building.~~

~~Figure 2.4.4-1 shows the functional arrangement of the ECCS, which is further described below. Tables 2.4.4-2 and 2.4.4-3 provide information on design characteristics of system components and system piping, respectively. Information in these tables is discussed below.~~

~~**Key Design Features**~~

~~The key design features of the ECCS are reflected in the system design bases, which include:~~

~~In combination with control rod insertion, the ECCS is designed to shut down and cool the reactor during the following accidents:~~ HH

- ~~LOCAs,~~
- ~~Ejection of a control rod cluster assembly,~~
- ~~Secondary steam system piping failure,~~
- ~~Inadvertent operating of main steam relief or safety valve, and~~
- ~~Steam generator tube failure.~~

- ~~The ECCS includes four 50%-capacity safety injection pump divisions, assuming one is out of service for maintenance and one becomes inoperative due to a single failure upon initiation of the ECCS.~~ II
- ~~The emergency power sources supply electrical power to the essential components of the ECCS, so the safety functions can be maintained during a loss of offsite power.~~ JJ
- ~~The ECCS is automatically initiated by an ECCS actuation signal.~~ KK
- ~~The ECCS design permits periodical tests and inspections to verify integrity and operability.~~ LL
- ~~The ECCS provides containment isolation of ECCS lines penetrating the containment.~~ MM
- ~~Each mechanical division of the ECCS is physically separated from the other divisions by a structural barrier, which also serves as a fire barrier. The piping and components inside the containment are exceptions.~~ NN

~~The key design features of the ECCS are as follows:~~

~~**Accumulator injection** – The accumulator system consists of four accumulators and the associated valves and piping, one for each RCS loop. The system is connected to the cold legs of the reactor coolant piping. The accumulators incorporate internal passive flow damper which function to inject a large flow to refill the reactor vessel in the first stage of injection, and then reduce the flow as the water level in the accumulator drop. The accumulators have a design pressure of 700 psig, and when the RCS pressure falls below approximately 640 psig, the accumulators begin to inject borated water into the RCS cold legs.~~ OO

~~When the water level is above the top of the standpipe, water enters the vortex chamber through both inlets at the top of the standpipe and at the side of the vortex chamber and thus it injects water with a large flow rate. When the water~~

~~level drops below the top of the standpipe, the water enters the vortex chamber only through the side inlet and thus it injects water with a relatively low flow rate. The accumulators perform the large flow injection to refill the reactor vessel and the following small flow injection during core re-flooding in association with the safety injection pumps. The combined performance of the accumulator system and the high-head injection system eliminate the need for a conventional low-head injection system.~~

~~**High-Head Injection** – The high head injection system consists of four independent divisions, each containing a safety injection pump and the associated valves, and piping. The safety injection pumps start automatically upon receipt of the ECCS actuation signal. Each safety injection pump receives power from the associated independent safety electrical bus.~~ PP

~~The safety injection pumps are aligned to take suction from the RWSP and to deliver borated water to the safety injection nozzles on the reactor vessel. Two safety injection divisions are capable of meeting the design cooling function for a large break LOCA, assuming a single failure in one train and another train out of service for maintenance.~~ QQ

~~The RWSP in the containment provides a continuous borated water source for the safety injection pumps thus eliminating the conventional realignment from the refueling water storage tank to the containment sump.~~ RR

~~**Emergency Letdown** – The emergency letdown system consists of two emergency letdown lines from the RCS hot legs to the refueling water storage pit. In the event that the normal CVCS letdown and boration capability is not available, the feed and bleed emergency letdown and boration operation can be utilized to achieve a cold shutdown boration level in the reactor coolant prior to the safe shutdown operation. The emergency letdown directs reactor coolant to the refueling water storage pit. The safety injection pumps provide borated coolant to the RCS from the refueling water storage pit.~~ SS

~~**Containment pH control** – Twenty three NaTB baskets containing NaTB as a buffer agent are located inside three NaTB basket containers at an elevation that is below the lowest spray ring. NaTB in basks is dissolved in spray water in the containers. The solution containing NaTB is discharged from each container to the RWSP through NaTB solution transfer pipe.~~ TT

~~**RWSP ECC/CS suction strainers** – Each quadrant of the RWSP is equipped with an ECC/CS suction strainer with the following design features:~~ UU

- ~~protection from the dynamic effects of high-energy line breaks~~
- ~~strainer corrosion resistance~~
- ~~strainer surface area~~
- ~~strainer perforated plate maximum hole diameter~~

- ~~strainer location at lower elevations in containment to maintain submergence during a design basis accident~~

~~The four suction strainers are designed to maintain adequate NPSH and minimize downstream effects to support ECC/CS functions, maintaining the reactor core in a long- term coolable geometry and supporting decay heat removal following a design basis accident.~~

~~Insulation and coatings inside containment are consistent with the design basis evaluations of ECC/CS suction strainer performance.~~

~~**RWSP replenishment function** - The RWSP is equipped with transfer piping and refueling cavity drain piping to serve to the replenishment functions necessary for the ECCS to perform its safety function.~~ VV

~~**Seismic and ASME Code Classifications**~~

~~The seismic classification of ECCS components is identified in Table 2.4.4-2. System components so identified in Table 2.4.4-2 are designed and constructed to ASME Code Section III requirements.~~ WW

~~All surfaces of the ECCS components and piping in contact with borated reactor coolant are austenitic stainless steel. The accumulator vessels are formed of carbon steel with stainless steel cladding on their internal surfaces. The pressure boundary welds in ASME Code Section III components and piping meet ASME Code Section III requirements.~~ XX

~~**System Operation**~~

~~Accumulator and high head injection system operation following an accident is addressed under key design features, as is the operation of the emergency letdown system to achieve a cold shutdown RCS boron level.~~ YY

~~**Alarms, Displays, and Controls**~~

~~Table 2.4.4-4 identifies alarms, displays, and controls associated with the ECCS that are located in the main control room.~~ ZZ

~~**Logic**~~

~~Each four safety injection pump automatically starts on receipt of an ECCS actuation signal.~~ AAA

~~**Interlocks**~~

~~A confirmatory open interlock is provided to automatically open the accumulator discharge valves upon the receipt of an ECCS actuation or an above low pressureizer pressure (P11) setpoint signal to ensure that the valves are opened.~~ BBB

~~**Class 1E Electrical Power Sources and Divisions**~~

~~The ECCS equipment identified in Table 2.4.4-2 as Class 1E is powered from their respective Class 1E divisions, and separation is provided between Class 1E divisions, and between Class 1E divisions and non-Class 1E cable.~~ CCC

~~**Equipment to be Qualified for Harsh Environments**~~

~~The Class 1E equipment identified in Table 2.4.4-2 as being qualified for a harsh environment can withstand the environmental conditions that would exist before, during, and following a design basis event without loss of safety function for the time required to perform the safety function.~~ DDD

~~**Interface Requirements**~~

~~There are no safety-related interfaces with systems outside of the certified design.~~ EEE

~~**Numeric Performance Values**~~

~~When necessary to demonstrate satisfaction of a design commitment, numeric performance values for selected components have been specified as ITAAC acceptance criteria in Table 2.4.4-5. Key parameters of the ECCS design that are used in the safety analysis and which are included in the Table 2.4.4-5 are activation of the ECCS and its ability to deliver water to cool the reactor.~~ FFF

2.4.4.2 Inspections, Tests, Analyses, and Acceptance Criteria

Table 2.4.4-5 describes the ITAAC for the ECCS.

The ITAAC associated with the ECCS equipment, components, and piping ~~and~~ that comprise a portion of the CIS are described in Table 2.11.2-2.

Table 2.4.4-1 Emergency Core Cooling System Location of Equipment and Piping

System and Components	Location
ECC/CS Suction Strainers	Containment
Safety injection pumps	Reactor Building
Accumulators	Containment
Refueling Water Storage Pit	Containment
NaTB Baskets	Containment
NaTB Basket Containers	Containment
Safety injection piping and valves between the direct vessel injection penetration and including the check valve SIS-VLV-012 A, B, C, D upstream of the direct vessel injection penetration	Containment
Safety injection piping and valves upstream of and excluding the check valve SIS-VLV-012A,B,C,D upstream of the direct vessel injection penetration	Containment and Reactor Building
Hot leg injection piping downstream of and including the motor operated valves SIS-MOV-014 A ,B, C, D	Containment
Hot leg injection piping upstream of but excluding the motor operated valves SIS-MOV-014 A, B, C, D	Containment
Accumulator piping and valves on the RCS side of and including the check valves SIS-VLV-102 A, B, C, D	Containment
Accumulator piping and valves on the accumulator side of but excluding the check valves SIS-VLV-102 A, B, C, D	Containment
Emergency letdown isolation valves SIS-MOV-~~031B~~031A, 031D, ~~032B~~032A, 032D and piping between valves	Containment
Accumulator nitrogen vent piping up and including valves SIS-VLV-114, SIS-MOV-121A,B	Containment and Reactor Building
NaTB solution transfer piping	Containment
RWSP transfer piping	Containment
Refueling cavity drain piping	Containment

GGG

Table 2.4.4-2 Emergency Core Cooling System Equipment Characteristics (Sheet 1 of 4)

Equipment Name	Tag No.	ASME Code Section III Class	Seismic Category I	Remotely Operated Valve	Class 1E/ Qual. For Harsh Envir.	PSMS Control	Active Safety Function	Loss of Motive Power Position
ECC/CS Strainers	SIS-SST-001 A, B, C, D	-	Yes	-	-/-	-	-	-
Safety Injection Pumps	SIS-MPP-001 A, B, C, D	2	Yes	-	Yes/No	ECCS Actuation	Start	-
Accumulators	SIS-MTK-001 A, B, C, D	2	Yes	-	-/-	-	-	-
Refueling Storage Water Pit	RWS-MCT-001	-	Yes	-	-/-	-	-	-
NaTB Baskets	PHS-MEQ-001A~Y	-	Yes	-	-/-	-	-	-
NaTB Basket Containers	PHS-MTK-001A,B,C	2	Yes	-	-/-	-	-	-
Safety Injection Pump Suction Isolation Valves	SIS-MOV-001 A, B, C, D	2	Yes	Yes	Yes/ Yes	Remote Manual	Transfer Closed	As Is
Safety Injection Pump Discharge Containment Isolation Valves	SIS-MOV-009 A, B, C, D	2	Yes	Yes	Yes/ No	Remote Manual	Transfer Closed	As Is
Safety Injection Pump Discharge Containment Isolation Check Valves	SIS-VLV-010 A, B, C, D	2	Yes	-	-/-	-	Transfer Open/ Transfer Closed	-

Table 2.4.4-2 Emergency Core Cooling System Equipment Characteristics (Sheet 2 of 4)

Equipment Name	Tag No.	ASME Code Section III Class	Seismic Category I	Remotely Operated Valve	Class 1E/ Qual. For Harsh Envir.	PSMS Control	Active Safety Function	Loss of Motive Power Position
Direct Vessel Safety Injection Line Isolation Valves	SIS-MOV-011 A, B, C, D	2	Yes	Yes	Yes/ Yes	Remote Manual	Transfer Open/ Transfer Closed	As Is
Hot Leg Injection Isolation Valves	SIS-MOV-014 A, B, C, D	1	Yes	Yes	Yes/ Yes	Remote Manual	Transfer Open	As Is
Hot Leg Injection Check Valves	SIS-VLV-015 A, B, C, D	1	Yes	-	-/-	-	Transfer Open	-
Accumulator Discharge Valves	SIS-MOV-101 A, B, C, D	2	Yes	Yes	Yes/ Yes	ECCS Actuation, Above Low Pressureizer Pressure (P11) Setpoint	Transfer Open	As Is
						Remote Manual	Transfer Closed	
Accumulator Nitrogen Supply Line Isolation Valves	SIS-MOV-125 A, B, C, D	2	Yes	Yes	Yes/ Yes	Remote Manual	Transfer Open	As Is
Accumulator Nitrogen Discharge Valves	SIS-MOV-121 A, B	2	Yes	Yes	Yes/ Yes	Remote Manual	Transfer Open	As Is
Accumulator Nitrogen Supply	SIS-AOV-114	2	Yes	Yes	Yes/No	Containment	Transfer	Closed

Containment Isolation Valve						Isolation	Closed

Table 2.4.4-2 Emergency Core Cooling System Equipment Characteristics (Sheet 3 of 4)

Equipment Name	Tag No.	ASME Code Section III Class	Seismic Category I	Remotely Operated Valve	Class 1E/ Qual. For Harsh Envir.	PSMS Control	Active Safety Function	Loss of Motive Power Position
Accumulator Nitrogen Supply Containment Isolation Check Valve	SIS-VLV-115	2	Yes	-	-/-	-	Transfer Closed	-
Accumulator Injection Line 1st Check Valves	SIS-VLV-102 A, B, C, D	1	Yes	No	-	-	Transfer Open	-
Accumulator Injection Line 2nd Check Valves	SIS-VLV-103 A, B, C, D	1	Yes	No	-	-	Transfer Open	-
Direct Vessel Injection Line 1st Check Valves	SIS-VLV-012 A, B, C, D	1	Yes	No	-	-	Transfer Open	-
Direct Vessel Injection Line 2nd Check Valves	SIS-VLV-013 A, B, C, D	1	Yes	No	-	-	Transfer Open	-
Emergency Letdown Line 1st Isolation Valves	SIS-MOV-031 A, D	1	Yes	Yes	Yes/ Yes	Remote Manual	Transfer Open/ Transfer Closed	As Is
Emergency Letdown Line 2nd Isolation Valves	SIS-MOV-032 A, D	1	Yes	Yes	Yes/ Yes	Remote Manual	Transfer Open/ Transfer Closed	As Is

Table 2.4.4-2 Emergency Core Cooling System Equipment Characteristics (Sheet 4 of 4)

Equipment Name	Tag No.	ASME Code Section III Class	Seismic Category I	Remotely Operated Valve	Class 1E/ Qual. For Harsh Envir.	PSMS Control	Active Safety Function	Loss of Motive Power Position
Safety Injection Pump Discharge Check Valves	SIS-VLV-004 A,B,C,D	2	Yes	No	—	—	Transfer Open	—
Safety Injection Pump Minimum Flow	SIS-FT-072, 073, 074, 075	—	Yes	—	Yes/No	—	—	—
Accumulator Water Level	SIS-LT-010, 020, 030,040	—	Yes	—	Yes/Yes	—	—	—
Accumulator Pressure	SIS-PT-010, 020, 030, 040	—	Yes	—	Yes/Yes	—	—	—
Safety Injection Pump Suction Pressure	SIS-PT-060, 061, 062, 063	—	Yes	—	Yes/No	—	—	—
Safety Injection Pump Discharge Pressure	SIS-PT-064, 065, 066, 067	—	Yes	—	Yes/No	—	—	—
Refueling Water Storage Pit Water Level	RWS-LT-010, 011, 012, 013	—	Yes	—	Yes/Yes	—	—	—
Safety Injection Pump Discharge Flow	SIS-FT-062, 063, 064, 065	—	Yes	—	Yes/No	—	—	—

NOTE:
Dash (-) indicates not applicable

Table 2.4.4-3 Emergency Core Cooling System Piping Characteristics

Pipe Line Name	ASME Code Section III Class	Leak Before Break	Seismic Category I
SI piping and valves between the DVI penetration and including the check valve SIS-VLV-012 A, B, C, D upstream of the DVI penetration	1	No	Yes
SI piping and valves upstream of and excluding the check valve SIS-VLV-012 A, B, C, D upstream of the DVI penetration	2	No	Yes
Hot leg injection piping downstream of and including the 4 motor operated valves SIS-MOV-014 A, B, C, D	1	No	Yes
Hot leg injection piping upstream of but excluding the 4 motor operated valves SIS-MOV-014 A, B, C, D	2	No	Yes
Accumulator piping and valves on the RCS side of and including the check valves SIS-VLV-102 A, B, C, D	1	Yes	Yes
Accumulator piping and valves on the accumulator side of but excluding the check valves SIS-VLV-102 A, B, C, D	2	No	Yes
Emergency letdown isolation valves SIS-MOV-031A, 031D, 032A, 032D and piping between valves	1	No	Yes
Accumulator nitrogen vent piping up and including valves SIS-AOV-114, SIS-MOV-121A,B	2	No	Yes
NaTB solution transfer piping	2	No	Yes
RWSP transfer piping	2	No	Yes
Refueling cavity drain piping	2	No	Yes

Table 2.4.4-4 Emergency Core Cooling System Equipment, Alarms, Displays and Control Functions (Sheet 1 of 2)

Equipment/Instrument Name	MCR/RSC Alarm	MCR Display	MCR/RSC Control Function	RSC Display
Safety Injection Pumps (SIS-MPP-001A,B,C,D)	No	Yes	Yes	Yes
Safety Injection Pump Suction Isolation Valves (SIS-MOV-001A,B,C,D)	No	Yes	Yes	Yes
Safety Injection Pump Discharge Containment Isolation Valves (SIS-MOV-009A,B,C,D)	No	Yes	Yes	Yes
Direct Vessel Safety Injection Line Isolation Valves (SIS-MOV-011A,B,C,D)	No	Yes	Yes	Yes
Hot Leg Injection Isolation Valves (SIS-MOV-014A,B,C,D)	No	Yes	Yes	Yes
Emergency Letdown Line 1st, 2nd Isolation Valves (SIS-MOV-031A,D and 032A,D)	No	Yes	Yes	Yes
Accumulator Discharge Valves (SIS-MOV-101A,B,C,D)	Yes	Yes	Yes	Yes
Accumulator Nitrogen Supply Line Isolation Valves (SIS-MOV-125A,B,C,D)	No	Yes	Yes	Yes
Accumulator Nitrogen Discharge Valves (SIS-MOV-121A,B,C,D)	No	Yes	Yes	Yes
Safety Injection Pump Discharge Flow (SIS-FT-062,063,064,065)	No	Yes	No	Yes
Safety Injection Pump Minimum Flow (SIS-FT-072,073,074,075)	No	Yes	No	Yes
Safety Injection Pump Discharge pressure (SIS-PT-064,065,066,067)	No	Yes	No	Yes
Safety Injection Pump Suction pressure (SIS-PT-060,061,062,063)	No	Yes	No	Yes

Table 2.4.4-4 Emergency Core Cooling System Equipment, Alarms, Displays and Control Functions (Sheet 2 of 2)

Equipment/Instrument Name	MCR/RSC Alarm	MCR Display	MCR/RSC Control Function	RSC Display
Accumulator Pressure (SIS-PT-010, 020,030,040)	Yes	Yes	No	Yes
Accumulator Water Level (SIS-LT-010,020,030,040)	Yes	Yes	No	Yes
Refueling Water Storage Pit Water Level (RWS-LT-010,011,012,013)	Yes(1)	Yes	No	Yes
Accumulator Nitrogen Supply Containment Isolation valve (SIS-AOV-114)	No	Yes	Yes	Yes

NOTE:
1. Alarm function is not required for “RWS-LT-010” and “RWS-LT-012”.

Table 2.4.4-5 Emergency Core Cooling System Inspections, Tests, Analyses, and Acceptance Criteria (Sheet 1 of 10)

Design Commitment	Inspections, Tests, Analyses	Acceptance Criteria
1.a The functional arrangement of the ECCS is as described in the Design Description of Subsection 2.4.4.1 ~~Design Description~~ and in Table 2.4.4-1 and as shown in Figure 2.4.4-1.	1.a ~~An~~ Inspection of the as-built ECCS ~~system~~ will be performed.	1.a The as-built ECCS conforms to the functional arrangement as described in the Design Description of ~~this~~ Subsection 2.4.4.1 and in Table 2.4.4-1 and as shown in Figure 2.4.4-1.
1.b Each mechanical division of the ECCS (Divisions A, B, C & D) is physically separated from the other divisions with the exception of inside the containment so as not to preclude accomplishment of the safety function.	1.b Inspections and analysis of the as-built ECCS will be performed.	1.b A report exists and concludes that ~~E~~each mechanical division of the as-built ECCS is physically separated from other mechanical divisions of the system by ~~structural~~ spatial separation, barriers, or enclosures with the exception of inside the containment so as to assure that the functions of the safety related system are maintained.
2.a.i The ASME Code Section III components of the ECCS, identified in Table 2.4.4-2 are fabricated, installed and inspected in accordance with ASME Code Section III requirements.	2.a.i ~~An i~~Inspection of the as-built ASME Code Section III components of the ECCS, identified in Table 2.4.2-2, ~~-~~will be performed.	2.a.i The ASME Code Section III data report(s) (certified, when required by ASME Code) and inspection reports (including N-5 Data Reports where applicable) exist and conclude that the as-built ASME Code Section III components of the ECCS identified in Table 2.4.4-2 are fabricated, installed, and inspected in accordance with ASME Code Section III requirements.
2.a.ii The ASME Code Section III components of the ECCS identified in Table 2.4.4-2 are reconciled with the design requirements.	2.a.ii A reconciliation analysis of the components identified in Table 2.4.4-2 using as-designed and as-built information and ASME Code Section III design report(s) (NCA-3550) will be performed.	2.a.ii The ASME Code Section III design report(s) (certified, when required by ASME Code) exist and conclude that the design reconciliation has been completed in accordance with the ~~as-built~~ ASME Code Section III for the as-built components of the ECCS identified in Table 2.4.4-2 ~~are reconciled with the design requirements~~. The report documents the results of the reconciliation analysis.

Table 2.4.4-5 Emergency Core Cooling System Inspections, Tests, Analyses, and Acceptance Criteria (Sheet 2 of 10)

Design Commitment	Inspections, Tests, Analyses	Acceptance Criteria
2.b.i The ASME Code Section III piping of the ECCS, including supports, identified in Table 2.4.4-3, is fabricated, installed, and inspected in accordance with ASME Code Section III requirements.	2.b.i ~~An i~~Inspection of the as-built ASME Code Section III piping of the ECCS, including supports, identified in Table 2.4.4-3 will be performed.	2.b.i The ASME Code Section III data report(s) (certified when required by ASME Code) and inspection reports (including N-5 Data Reports where applicable) exist and conclude that the as-built ASME Code Section III piping of the ECCS, including supports, identified in Table 2.4.4-3 is fabricated, installed, and inspected in accordance with ASME Code Section III requirements.
2.b.ii The ASME Code Section III piping of the ECCS, including supports, identified in Table 2.4.4-3 are reconciled with the design requirements.	2.b.ii A reconciliation analysis of the piping of the ECCS, including supports, identified in Table 2.4.4-3, using as-designed and as-built information and ASME Code Section III design report(s) (NCA-3550) will be performed.	2.b.ii The ASME Code Section III design report(s) (certified, when required by ASME Code) exist and conclude that the design reconciliation has been completed in accordance with the ASME Code, for the as-built ASME Code Section III piping of the ECCS, including supports, identified in Table 2.4.4-3. ~~is reconciled with the design requirements.~~ The report documents the results of the reconciliation analysis.

Table 2.4.4-5 Emergency Core Cooling System Inspections, Tests, Analyses, and Acceptance Criteria (Sheet 3 of 10)

Design Commitment	Inspections, Tests, Analyses	Acceptance Criteria
3.a Pressure boundary welds in ASME Code Section III components, identified in Table 2.4.4-2, meet ASME Code Section III requirements for non-destructive examination of welds.	3.a Inspections of the as-built pressure boundary welds in ASME Code Section III components identified in Table 2.4.4-2, will be performed in accordance with the ASME Code Section III.	3.a The ASME Code Section III code reports exist and conclude that the ASME Code Section III requirements are met for non-destructive examination of the as-built pressure boundary welds in ASME Code Section III components identified in Table 2.4.4-2.
3.b Pressure boundary welds in ASME Code Section III piping, identified in Table 2.4.4-3, meet ASME Code Section III requirements for non-destructive examination of welds.	3.b Inspections of the as-built pressure boundary welds in ASME Code Section III piping identified in Table 2.4.4-3, will be performed in accordance with the ASME Code Section III.	3.b The ASME Code Section III code reports exist and conclude that the ASME Code Section III requirements are met for non-destructive examination of as-built pressure boundary welds in ASME Code Section III piping identified in Table 2.4.4-3.
4.a The ASME Code Section III components, identified in Table 2.4.4-2, retain their pressure boundary integrity at their design pressure.	4.a A hydrostatic test will be performed on the as-built components, identified in Table 2.4.4-2, required by the ASME Code Section III to be hydrostatically tested.	4.a ASME Code Data Report(s) exist and conclude that ~~T~~the results of the hydrostatic test of the as-built components identified in Table 2.4.4-2 as ASME Code Section III conform with the requirements of the ASME Code Section III.
4.b The ASME Code Section III piping, identified in Table 2.4.4-3, retains its pressure boundary integrity at its design pressure.	4.b A hydrostatic test will be performed on the as-built piping, identified in Table 2.4.4-3, required by the ASME Code Section III to be hydrostatically tested.	4.b ASME Code Data Report(s) exist and conclude that ~~T~~the results of the hydrostatic test of the as-built piping identified in Table 2.4.4-3 as ASME Code Section III conform with the requirements of the ASME Code Section III.
5.a The seismic Category I equipment, identified in Table 2.4.4-2, ~~is designed to~~ can withstand seismic design basis loads without loss of safety function.	5.a.i Inspections will be performed to verify that the as-built seismic Category I equipment identified in Table 2.4.4-2 is located in ~~the containment and reactor building~~a seismic Category I structure.	5.a.i The as-built seismic Category I equipment identified in Table 2.4.4-2 is located in ~~the containment and reactor building~~a seismic Category I structure.

	5.a.ii	Type tests, analyses, or a combination of type tests and/~~or~~ analyses of seismic Category I equipment identified in Table 2.4.4-2 will be performed using analytical assumptions, or will be performed under conditions, which bound the seismic design basis requirements.	5.a.ii	A report exists and ~~The results of the type tests and/or analyses~~ concludes that the seismic Category I equipment identified in Table 2.4.4-2 can withstand seismic design basis loads without loss of safety function.
	5.a.iii	Inspections and analyses will be performed to verify that ~~on~~ the as-built seismic Category I equipment identified in Table 2.4.4-2 including anchorages, is seismically bounded by the tested or analyzed conditions.	5.a.iii	A report exists and concludes that ~~T~~the as-built seismic Category I equipment identified in Table 2.4.4-2, including anchorages, is seismically bounded by the tested or analyzed conditions.

Table 2.4.4-5 Emergency Core Cooling System Inspections, Tests, Analyses, and Acceptance Criteria (Sheet 4 of 10)

Design Commitment		Inspections, Tests, Analyses		Acceptance Criteria	
5.b	~~Each of t~~The seismic Category I piping, including supports, identified in Table 2.4.4-3 ~~is designed to~~can withstand ~~combined normal and~~ seismic design basis loads without a loss of its safety function.	5.b.i	Inspections will be performed to verify that the as-built seismic Category I piping, including supports, identified in Table 2.4.4-3 ~~are~~ is supported by a seismic Category I structure(s).	5.b.i	~~Reports(s) document that each of t~~The as-built seismic Category I piping, including supports, identified in Table 2.4.4-3 is supported by a seismic Category I structure(s).
		5.b.ii	Inspections and analyses will be performed to verify~~for the existence of a report verifying~~ that the as-built seismic Category I piping, including supports, identified in Table 2.4.4-3 can withstand ~~combined normal and~~ seismic design basis loads without a loss of its safety function.	5.b.ii	A report exists and concludes that ~~each of~~ the as-built seismic Category I piping, including supports, identified in Table 2.4.4-3 can withstand ~~combined normal and~~ seismic design basis loads without a loss of its safety function.
6.a	The Class 1E equipment identified in Table 2.4.4-2 as being qualified for a harsh environment ~~is designed to~~ can withstand the environmental conditions that would exist before, during, and following a design basis ~~event~~ accident without loss of safety function for the time required to perform the safety function.	6.a.i	Type tests, ~~and/or analyses~~, or a combination of type tests and analyses using the design environmental conditions, or under conditions which bound the design environmental conditions, will be performed on the Class 1E equipment identified in Table 2.4.4-2 as being qualified for ~~located in~~ a harsh environment.	6.a.i	A report exists and ~~The results of the type tests, and/or analyses~~ concludes that the Class 1E equipment identified in Table 2.4.4-2 as being qualified for a harsh environment can withstand the environmental conditions that would exist before, during, and following a design basis ~~event~~accident without loss of safety function for the time required to perform the safety function.
		6.a.ii	Inspection~~s~~ will be performed on the as-built Class 1E equipment identified in Table 2.4.4-2 as being qualified for a harsh environment and the associated wiring, cables, and terminations located in a harsh environment.	6.a.ii	The as-built Class 1E equipment and the associated wiring, cables, and terminations identified in Table 2.4.4-2 as being qualified for a harsh environment are bounded by type tests~~, and/or analyses,~~ or a combination of type tests and analyses.

Table 2.4.4-5 Emergency Core Cooling System Inspections, Tests, Analyses, and Acceptance Criteria (Sheet 5 of 10)

Design Commitment		Inspections, Tests, Analyses		Acceptance Criteria	
6.b	The Class 1E equipment, identified in Table 2.4.4-2, is powered from ~~their~~its respective Class 1E division.	6.b	A test will be performed on each division of the as-built Class 1E equipment identified in Table 2.4.4-2 by providing a simulated test signal only in the Class 1E division under test.	6.b	The simulated test signal exists at the as-built Class 1E equipment identified in Table 2.4.4-2 under test.
6.c	Separation is provided between redundant divisions of ECCS Class 1E ~~divisions~~cables, and between Class 1E ~~divisions~~ cables and non-Class 1E cables.	6.c	Inspections of the as-built Class 1E divisional cables will be performed.	6.c	Physical separation or electrical isolation is provided in accordance with RG 1.75, between the as-built cables of redundant ECCS Class 1E divisions and between Class 1E cables~~divisions~~ and non-Class 1E cables.
7.a	Deleted.	7.a	Deleted.	7.a	Deleted.
7.b	The ECCS provides RCS makeup, boration, and safety injection during design basis events.	7.b.i.a	An ~~I~~injection test with low tank pressure condition for each as-built accumulator will be conducted. The test will be initiated by opening isolation valve(s) in the piping being tested. Each as-built accumulator will be partially filled with water and pressurized with nitrogen. All valves in these lines will be open during the test. An analysis will be performed to determine the water volume injected.	7.b.i.a	A report exists and concludes that ~~T~~the total water volume injected from each as-built accumulator into the reactor vessel is ≥2126 ft^3. The water volume injected from each accumulator into reactor vessel at large flow rate (prior to flow switching to small flow rate) is ≥1326.8 ft^3.
		7.b.i.b	~~An analysis~~Tests and analyses of the as-built accumulator system will be performed to calculate the resistance coefficients of the as-built accumulator system.	7.b.i.b	A report exists and concludes that ~~T~~the calculated resistance coefficients of the as-built accumulator system (based on a cross-section area of 0.6827 ft^2) meet the requirements shown in Table 2.4.4-6.

	7.b.ii	The as-built safety injection pump injection test will be performed. Analysis will be performed to convert the test results from the test conditions to the design condition.	7.b.ii	A report exists and concludes that ~~E~~each as-built safety injection pump has a pump differential head of no less than 3937 ft and no more 4527 ft at the minimum flow, and injects no less than 1259 gpm and no more than 1462 gpm of RWSP water into the reactor vessel at atmospheric pressure.

Table 2.4.4-5 Emergency Core Cooling System Inspections, Tests, Analyses, and Acceptance Criteria (Sheet 6 of 10)

Design Commitment	Inspections, Tests, Analyses	Acceptance Criteria
7.b The ECCS provides RCS makeup, boration, and safety injection during design basis events.	7.b.iii.a Inspections of each as-built accumulator ~~and the RWSP~~ will be conducted.	7.b.iii.a The volume of each as-built accumulator is ~~as follows: Each as-built accumulator:~~ at least 3,180 ft^3
	7.b.iii.b Inspections of the RWSP will be conducted	7.b.iii.b The volume of the as-built RWSP is ~~As-built RWSP:~~ at least 81,230 ft^3
	7.b.iv ~~An inspection for the existence of a report for~~Inspection and analysis of the as-built ECC/CS suction strainers will be conducted.	7.b.iv A report exists and concludes that each of the four as-built ECC/CS suction strainers have the following features: stainless steel materials of construction for corrosion resistance; a minimum strainer surface area of 3510 square feet; perforated plate with maximum hole diameter of 0.066 inches; remains submerged under design basis accident conditions ; ~~minimizes~~ achieves head loss consistent with design basis NPSH evaluations ~~for ECC/CS;~~ ~~minimizes downstream effects to maintain the reactor core in a long term coolable geometry and support decay heat removal following a design basis accident.~~
	7.b.v ~~An inspection for the existence of a report for~~Inspections and analyses of the as-built coatings used in the containment will be conducted.	7.b.v A report exists and concludes that the as-built coatings used in the containment are ~~DBA-qualified and are~~ consistent with the ECC/CS suction strainer debris generation, debris transport and downstream effects evaluations.

Table 2.4.4-5 Emergency Core Cooling System Inspections, Tests, Analyses, and Acceptance Criteria (Sheet 7 of 10)

Design Commitment	Inspections, Tests, Analyses	Acceptance Criteria
7.b The ECCS provides RCS makeup, boration, and safety injection during design basis events.	7.b.vi ~~An inspection for the existence of a report for~~Inspections of the as-built insulation used in the containment will be conducted	7.b.vi A report exists and concludes that the as-built insulation in containment ~~meets the following criteria:~~ ~~Reflective metal insulation (RMI) is used for the as-built reactor coolant loop (RCL) piping and main steam / feedwater (MS/FW) piping inside containment, and is consistent with design basis evaluations of suction strainer performance and downstream effects.~~ ~~Fibrous insulation is minimized and~~ is consistent with design basis evaluations of suction strainer performance and downstream effects.

Table 2.4.4-5 Emergency Core Cooling System Inspections, Tests, Analyses, and Acceptance Criteria (Sheet 8 of 10)

Design Commitment	Inspections, Tests, Analyses	Acceptance Criteria
7.c The ECCS provides pH adjustment of water flooding the containment following design basis accidents.	7.c Inspections and analyses of the as-built NaTB baskets will be conducted.	7.c A report exists and concludes that ~~T~~the as-built NaTB baskets ~~exist, with~~contain a total calculated weight of NaTB of ≥44,100 pounds. The tops of the as-built NaTB baskets are located below plant elevation 131 ft, 6 in.
7.d The safety injection pumps have sufficient net positive suction head (NPSH).	7.d Tests to measure the as-built safety injection pump suction pressure will be performed. Inspections and analysis to determine NPSH available to each safety injection pump will be performed. The analysis will consider vendor test results of required NPSH and the effects of: - pressure losses for pump inlet piping and components, - pressure losses for pump suction strainers due to debris blockage, - suction from the RWSP water level at the minimum value, - ~~vendor test results of required NPSH.~~	7.d A report exists and concludes that ~~T~~the as-built ~~system meets the design, and the analysis confirms that the~~ NPSH available to each safety injection pump is ~~at least 21.9 feet at 1540 gpm.~~greater than the NPSH required.
8. Controls ~~exist~~ are provided in the MCR to open and close the remotely operated valves identified in Table 2.4.4-2.	8. Tests will be performed on the as-built remotely operated valves ~~listed~~ identified in Table 2.4.4-2 using controls in the as-built MCR.	8. Controls ~~exist~~ in the as-built MCR ~~to~~ open and close the as-built remotely operated valves ~~listed~~ identified in Table 2.4.4-2.

Table 2.4.4-5 Emergency Core Cooling System Inspections, Tests, Analyses, and Acceptance Criteria (Sheet 9 of 10)

Design Commitment		Inspections, Tests, Analyses		Acceptance Criteria	
9.a	The motor-operated, air-operated and check valves, identified in Table 2.4.4-2 as having an active safety function, perform an active safety function to change position as indicated in the table.	9.a.i	~~Tests or t~~Type tests or a combination of type tests and analyses of motor-operated and air operated valves identified in Table 2.4.4-2 as having an active safety function will be performed that demonstrate the capability of the valve to operate under its design conditions.	9.a.i	A report exists and concludes that ~~E~~each motor-operated and air operated valve identified in Table 2.4.4-2 as having an active safety function changes position as indicated in Table 2.4.4-2 under design conditions.
		9.a.ii	Tests of the as-built motor-operated and air operated valves identified in Table 2.4.4-2 as having an active safety function will be performed under pre-operational flow, differential pressure, and temperature conditions.	9.a.ii	Each as-built motor-operated and air operated valve identified in Table 2.4.4-2 as having an active safety function changes position as indicated in Table 2.4.4-2 under pre-operational test conditions.
		9.a.iii	Inspections will be performed of the as-built motor-operated and air-operated valves identified in Table 2.4.4-2 as having an active safety function.	9.a.iii	Each as-built motor-operated and air-operated valve identified in Table 2.4.4-2 as having an active safety function is bounded by the type tests, or a combination of type tests and analyses.
		9.a.~~iii~~iv	Tests of the as-built check valves ~~with active safety functions~~ identified in Table 2.4.4-2 as having an active safety function will be performed under pre-operational test pressure, temperature, and fluid flow conditions.	9.a.~~iii~~ iv	Each as-built check valve identified in Table 2.4.4-2 as having an active safety function changes position as indicated in Table 2.4.4-2.
9.b	After loss of motive power, the remotely operated valves, identified in Table 2.4.4-2, assume the indicated loss of motive power position	9.b.	Tests of the as-built remotely operated valves identified in Table 2.4.4-2 will be performed under the conditions of loss of motive power.	9.b	Upon loss of motive power, each as-built remotely operated valve identified in Table 2.4.4-2 assumes the indicated loss of motive power position.

10.a	Controls ~~exist~~ are provided in the MCR to start and stop the safety injection pumps identified in Table 2.4.4-4.	10.a	Tests will be performed on the as-built safety injection pumps identified in Table 2.4.4-4 using controls in the as-built MCR.	10.a	Controls ~~exist~~ in the as-built MCR ~~to~~ start and stop the as-built safety injection pumps ~~listed~~ identified in Table 2.4.4-4.
10.b	The pumps identified in Table 2.4.4-4 start after receiving an ECCS actuation signal.	10.b	Tests will be performed on the as-built pumps identified in Table 2.4.4-4 using ~~a~~ simulated signals.	10.b	The as-built pumps identified in Table 2.4.4-4 start after receiving a simulated ECCS actuation signal.
10.c	A confirmatory-open interlock is provided to automatically open the accumulator discharge valve upon the receipt of an ECCS actuation signal or an above low pressur~~e~~izer pressure (P11) setpoint signal.	10.c~~b~~	Tests will be performed using simulated signals.	10.c~~b~~	The as-built accumulator discharge valves identified in Table 2.4.4-2 automatically opens upon either the receipt of simulated ECCS actuation or above low pressurizer pressure signal.

Table 2.4.4-5 Emergency Core Cooling System Inspections, Tests, Analyses, and Acceptance Criteria (Sheet 10 of 10)

Design Commitment		Inspections, Tests, Analyses		Acceptance Criteria	
11.	~~MCR a~~Alarms and displays ~~of the parameters~~ identified in Table 2.4.4-4 ~~can be retrieved~~are provided in the MCR.	11.	Inspection~~s~~ will be performed for retrievability of the ~~ECCS parameters in the as-built~~alarms and displays identified in Table 2.4.4-4 in the as-built MCR.	11.	~~MCR a~~Alarms and displays identified in Table 2.4.4-4 can be retrieved in the as-built MCR.
12.	~~RSC a~~Alarms, displays and controls ~~are~~ identified in Table 2.4.4-4 are provided in the RSC.	12.i	Inspection~~s of the as-built RSC alarms, displays and controls~~ will be performed for retrievability of the alarms and displays identified in Table 2.4.4-4 in the as-built RSC.	12.i	Alarms~~,~~and displays ~~and controls exist on the as-built RSC as~~ identified in Table 2.4.4-4 can be retrieved in the as-built RSC.
		12.ii	Tests of the as-built RSC control~~s~~ functions identified in Table 2.4.4-4 will be performed.	12.ii	Controls in the as-built RSC operate the as-built equipment identified in Table 2.4.4-4 with an RSC control function.
13.	~~Each of t~~The as-built piping identified in Table 2.4.4-3 as designed for LBB meets the LBB criteria, or an evaluation is performed of the protection from the dynamic effects of a rupture of the line.	13.	Inspections of the as-built piping identified in Table 2.4.4-3 will be performed based on the evaluation report for LBB or for the evaluation of the protection from dynamic effects of a pipe break, as specified in Section 2.3.	13.	~~The~~An LBB evaluation report exists and concludes that the LBB acceptance criteria are met by the as-built piping identified in Table 2.4.4-3 and piping materials, or a pipe break hazards analysis report exists and concludes that ~~the~~ protection is provided ~~for~~from the dynamic effects of a line ~~the piping~~ break is provided.
14.a	Deleted~~The materials of construction of the ASME Code Section III, Class 1 components, identified in Table 2.4.4-2, are in accordance with ASME Code requirements.~~	14.a	Deleted.~~Inspection of the certified material test reports will be performed.~~	14.a	Deleted.~~The materials of construction of the ASME Code Section III, Class 1 components identified in Table 2.4.4-2 conform to the requirements of the ASME Code.~~
14.b	Deleted.~~The materials of construction of the ASME Code Section III, Class 1 piping, identified in Table 2.4.4-3, are in accordance with ASME Code requirements.~~	14.b	Deleted.~~Inspection of the certified material test reports will be performed.~~	14.b	Deleted.~~The materials of construction of the ASME Code Section III, Class 1 piping identified in Table 2.4.4-3 conform to the requirements of the ASME Code.~~

Table 2.4.4-6 Requirement for Accumulator System Resistance Coefficient

Operation mode	Resistance coefficient (based on a cross-section area of 0.6827 ft^2)
Large flow injection	$\geq \frac{1}{[x\{0.7787-0.6889\exp(-0.5238\sigma_V)\}]^2}+461.7f+1.99$ $\leq \frac{1}{[y\{0.7787-0.6889\exp(-0.5238\sigma_V)\}]^2}+564.3f+2.21$ Where σ_V :cavitation factor $x = 1+\frac{uncertainty(\%)}{100}$ $y = 1-\frac{uncertainty(\%)}{100}$ f : friction factor of piping
Small flow injection	$\geq \frac{1}{[x\{0.07197-0.01904\exp(-6.818\sigma_V)\}]^2}+461.7f+1.99$ $\leq \frac{1}{[y\{0.07197-0.01904\exp(-6.818\sigma_V)\}]^2}+564.3f+2.21$ Where σ_V :cavitation factor $x = 1+\frac{uncertainty(\%)}{100}$ $y = 1-\frac{uncertainty(\%)}{100}$ f : friction factor of piping

GGG

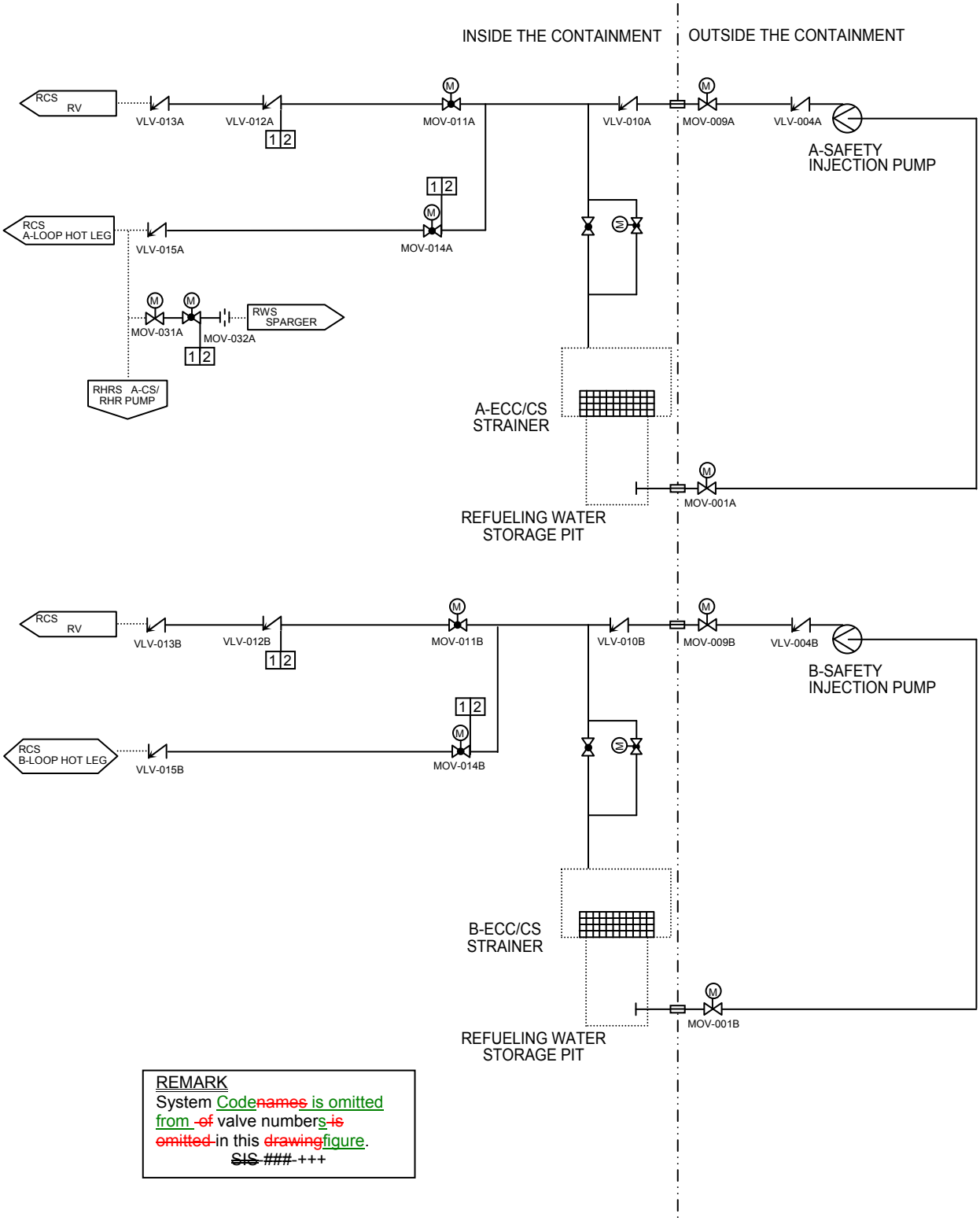

REMARK
System Code~~names~~ is omitted from ~~of~~ valve numbers ~~is omitted~~ in this ~~drawing~~figure.
~~SIS~~ ~~###~~ +++

HHH

Figure 2.4.4-1 Emergency Core Cooling System (Sheet 1 of 4)

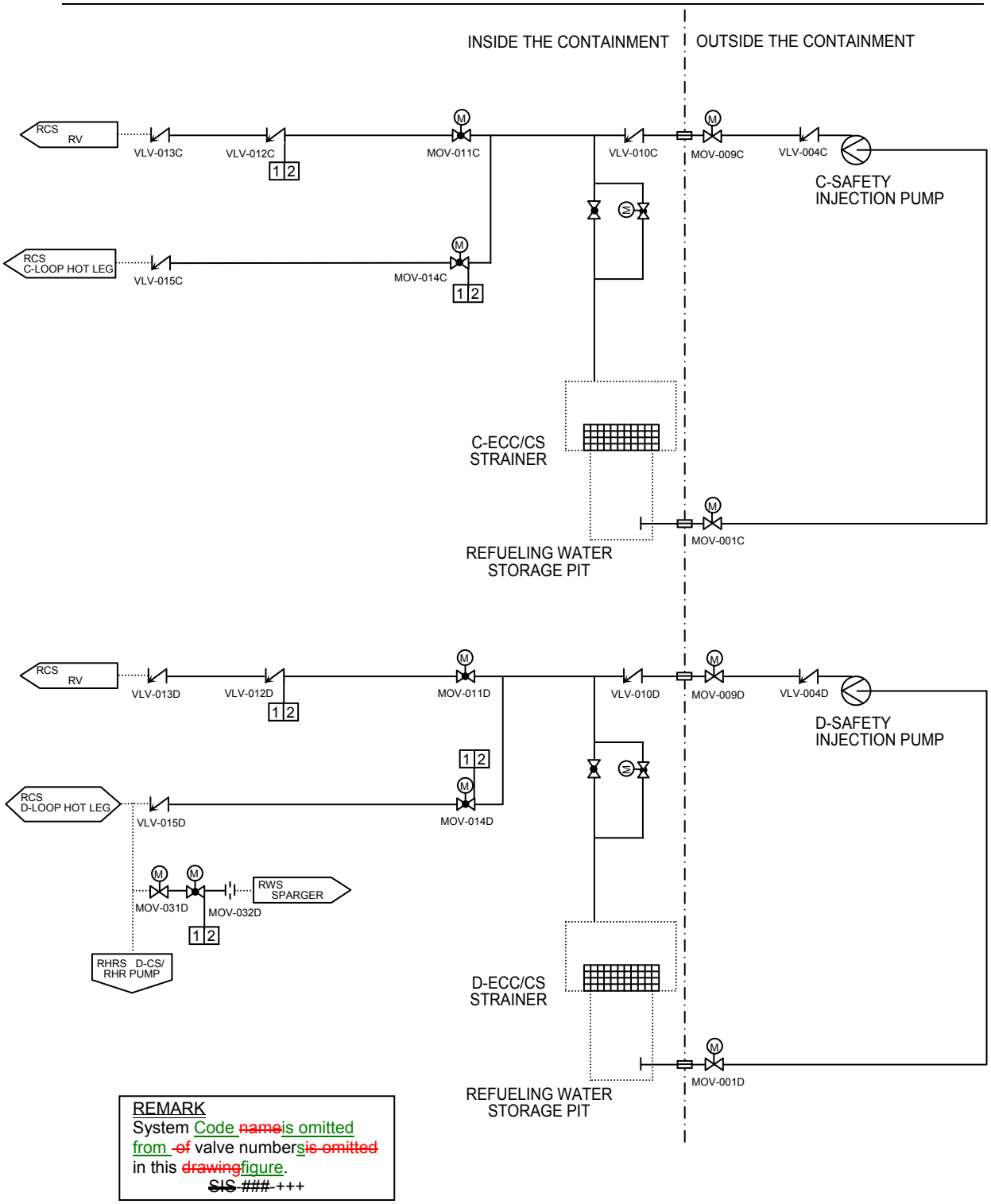

Figure 2.4.4-1 Emergency Core Cooling System (Sheet 2 of 4)

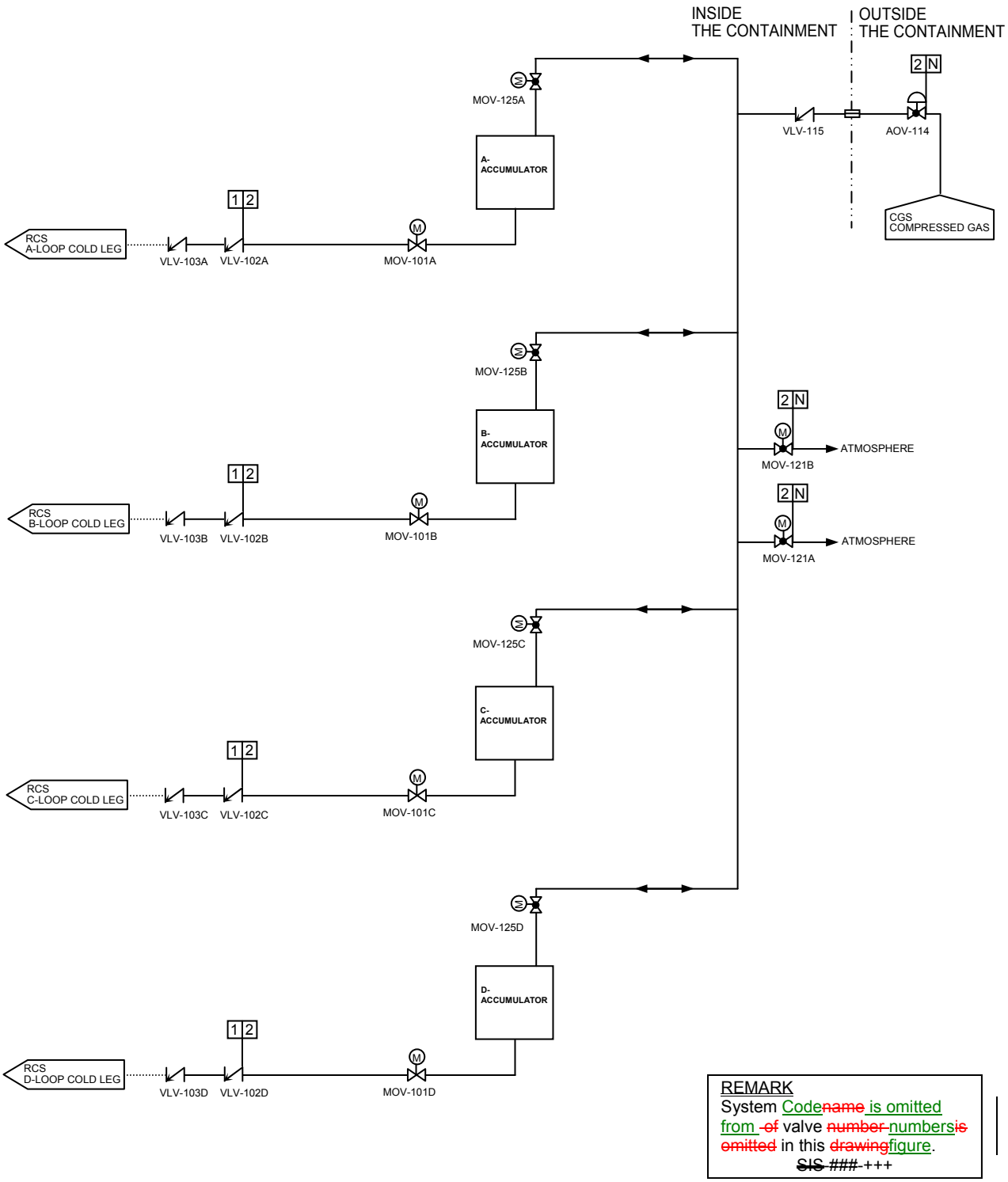

Figure 2.4.4-1 Emergency Core Cooling System (Sheet 3 of 4)

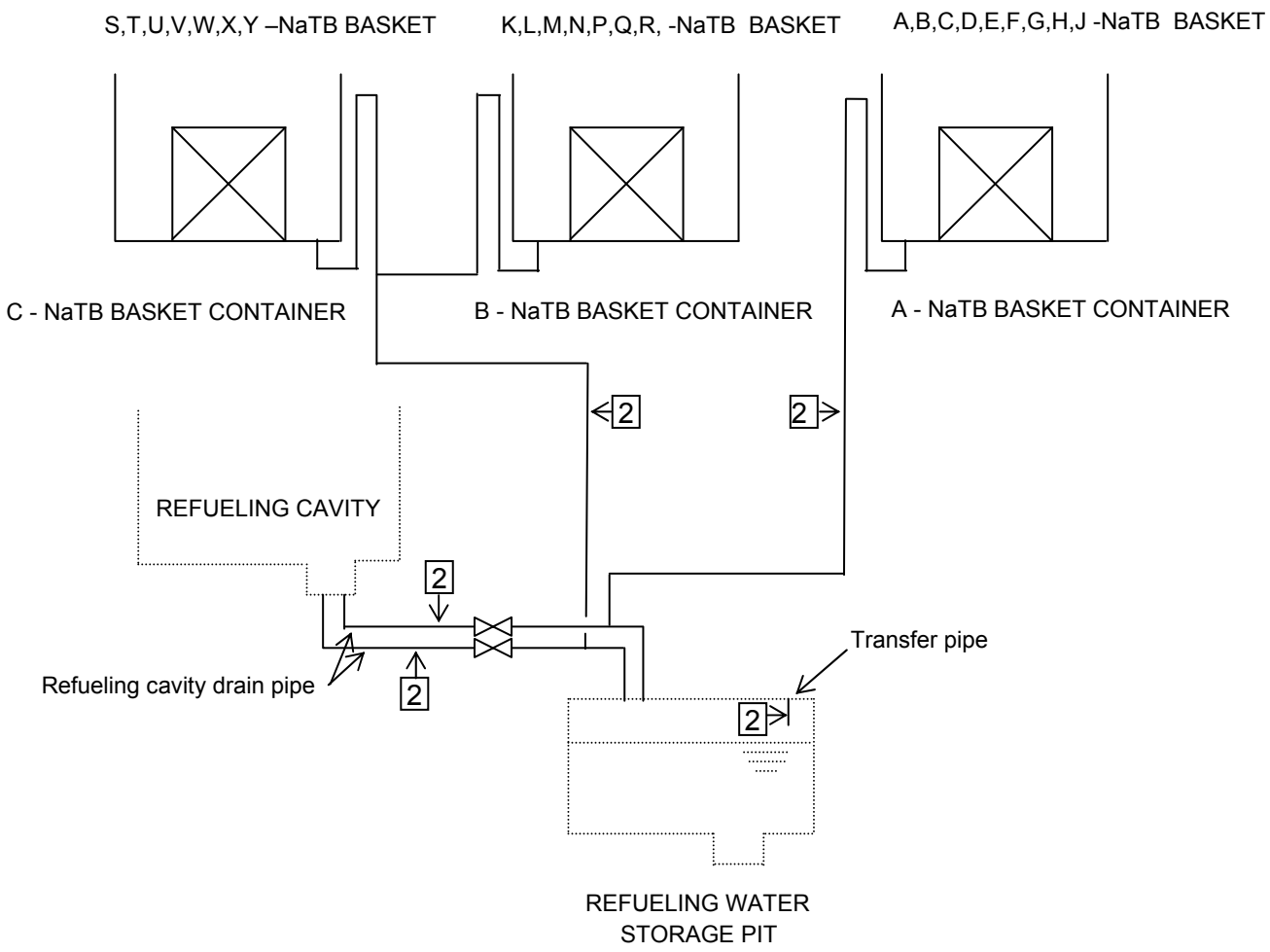

Figure 2.4.4-1 Emergency Core Cooling System (Sheet 4 of 4)

2.4.5 Residual Heat Removal System (RHRS)

2.4.5.1 Design Description

~~System Purpose and Functions~~

The RHRS ~~is designed to~~ cools the reactor by removing decay heat and other residual heat from the reactor core and the reactor coolant system (RCS) during normal ~~the~~ plant shutdown and cooldown conditions via the component cooling water system (CCWS). Any two of the four subsystems have a 100% capability for safe shutdown. The RHRS provides cooling for the in-containment RWSP during normal plant operation when required and can also provide a portion of the RCS flow to the chemical and volume control system (CVCS) during normal plant startup and cooldown operations to control RCS pressure. The RHRS can operate during mid-loop or drain down operation to allow maintenance or inspection of the reactor head, steam generator, and reactor coolant pump seals and can transfer borated water from the RWSP to the refueling cavity at the beginning of a refueling operation. A

The RHRS is a safety-related system. Portions of the RHRS (i.e., heat exchangers and pumps) are shared with the containment spray system (CSS). The RHRS provides the containment isolation function, as described in Section 2.11.2, for the piping that penetrates the containment. The RHRS is used as an alternate for core cooling / injection in case all safety injection systems fail.

~~The RHRS has the following safety functions:~~

- ~~The RHRS is designed to cool the reactor by removing fission product decay heat and other residual heat from the reactor core and the RCS after the initial phase of the normal plant shutdown and cooldown. During the initial phase of cooldown, the heat is transferred from the RCS through the steam generators (SGs).~~ B
- ~~The RHRS is designed to ensure that the reactor core decay heat and other residual heat are safely removed from the reactor with four independent subsystems. Any two of the four subsystems have a 100% capability for safe shutdown.~~ C
- ~~Each containment spray/residual heat removal (CS/RHR) pump receives electrical power from safety buses so that the RHRS safety functions are maintained during a loss of offsite power.~~ D
- ~~Each CS/RHR pump and isolation valve of one division is connected independent from other electrical divisions so that the RHRS safety functions are maintained during a single failure of an electrical division. This design prevents the loss of two or more trains during an electrical failure.~~ E

- ~~The RHRS provides the containment isolation function, as described in Section 2.11.2, for the piping that penetrates the containment.~~ F

~~RHRS non-safety functions are identified below under key design features.~~

~~**Location and Functional Arrangement**~~

1.a The ~~location and~~ functional arrangement of RHRS ~~equipment and piping~~ is as described in the Design Description of Subsection 2.4.5.1 and in Table 2.4.5-1 and as shown ~~on~~ in Figure 2.4.5-1. ~~Table 2.4.5-1 also provides a tabulation of the location of RHRS equipment. All major equipment of the RHRS are located within the reactor building, while the piping and valves of the RHRS are located within both the reactor building and the containment.~~ G

~~As shown in Figure 2.4.5-1, the RHRS consists of four independent subsystems, with each CS/RHR pump taking suction from one of the RCS hot legs by a separate suction line. The pumps then discharge the reactor coolant through the CS/RHR heat exchangers, which transfers heat from the hot reactor coolant fluid to the CCWS circulating through the shell side of the CS/RHR heat exchangers. The cooled reactor coolant is then returned to the RCS cold legs.~~

1.b Each mechanical division of the RHRS (Divisions A, B, C & D) is physically separated from the other divisions with the exception of inside the containment so as not to preclude accomplishment of the safety function.

~~**Key Design Features**~~ I

~~The key design features of the RHRS are reflected in the system design bases, which include:~~

- ~~The RHRS is designed to provide a portion of the RCS flow to the CVCS during normal plant startup and cooldown operations to control RCS pressure.~~

- ~~The RHRS is designed to transfer borated water from the RWSP to the refueling cavity at the beginning of a refueling operation.~~ K

- ~~The RHRS is designed to provide cooling for the in-containment RWSP during normal plant operations when required. The system is manually initiated by the operator. The RHRS limits the in-containment RWSP water temperature to not greater than 120° F during normal operation~~.

- ~~The RHRS is designed and equipped with pressure relief valves to prevent RCS low temperature over-pressurization transients condition, loss of equipment and possible operator error, during plant startup, shutdown, and cold shutdown decay heat-removal.~~ L

- ~~The RHRS is designed for a single nuclear power unit and is not shared between units.~~ M
- ~~The RHRS divisions are supplied by separate Class 1E electrical divisions thereby being operationally independent of the each other~~ N
- ~~The RHRS is designed to be fully operable by the control room operator.~~ O
- ~~The RHRS is designed to be operated during mid-loop or drain down operation to allow maintenance or inspection of the reactor head, SG, and reactor coolant pump seals.~~ P
- ~~There are no motor-operated valves in the RHRS that are subject to flooding following a secondary side break or a LOCA.~~ Q
- ~~The CS/RHR pumps are protected from overheating and loss of suction flow against shutoff operation by minimum flow lines that ensure flow to the pump suction.~~ R
- ~~The RHRS is designed for protection against missiles, protection against dynamic effects associated with the postulated rupture of piping and pipe whipping, discharging fluids inside and outside the containment, fires, loss-of-coolant accidents loads, and seismic effects.~~ S
- ~~The RHRS is designed to provide containment isolation of the piping penetrating the containment.~~ T
- ~~Each mechanical division of the RHRS is physically separated from the other divisions by a structural barrier, which also serves as a fire barrier. The piping and components inside the containment are exceptions.~~ U
- ~~The RHRS is used as an alternate core cooling / injection in case all safety injection system fails.~~ V

~~**Seismic and ASME Code Classifications**~~

2.a.i The ASME Code Section III components of the RHRS, identified in Table 2.4.5-2, are fabricated, installed and inspected in accordance with ASME Code Section III requirements. W

2.a.ii The ASME Code Section III components of the RHRS identified in Table 2.4.5-2 are reconciled with the design requirements.

2.b.i The ASME Code Section III piping of the RHRS, including supports, identified in Table 2.4.5-3, is fabricated, installed, and inspected in accordance with ASME Code Section III requirements.

2.b.ii The ASME Code Section III piping of the RHRS, including supports, identified in Table 2.4.5-3 are reconciled with the design requirements.

3.a Pressure boundary welds in ASME Code Section III components, identified in Table 2.4.5-2, meet ASME Code Section III requirements for non-destructive examination of welds. X

3.b Pressure boundary welds in ASME Code Section III piping, identified in Table 2.4.5-3, meet ASME Code Section III requirements for non-destructive examination of welds.

4.a The ASME Code Section III components, identified in Table 2.4.5-2, retain their pressure boundary integrity at their design pressure.

4.b The ASME Code Section III piping, identified in Table 2.4.5-3, retains its pressure boundary integrity at its design pressure.

5.a The seismic Category I equipment, identified in Table 2.4.5-2, can withstand seismic design basis loads without loss of safety function. Y

5.b The seismic Category I piping, including supports, identified in Table 2.4.5-3 can withstand seismic design basis loads without a loss of its safety function.

~~The seismic classifications for system components are identified in Table 2.4.5-2. The ASME Code Section III requirements for system components are also identified in Table 2.4.5-2. Table 2.4.5-3 provides this information for system piping.~~ Z

~~The materials used in the RCPB conform to the applicable ASME code rules. The welding materials used for joining RCPB materials conform to the requirements of the ASME Code Section III. Pressure boundary welds in ASME Code Section III components and piping meet ASME Code Section III requirements.~~

6.a The Class 1E equipment identified in Table 2.4.5-2 as being qualified for a harsh environment can withstand the environmental conditions that would exist before, during, and following a design basis accident without loss of safety function for the time required to perform the safety function. AA

6.b Class 1E equipment, identified in Table 2.4.5-2, is powered from its respective Class 1E division. BB

6.c Separation is provided between redundant divisions of RHRS Class 1E cables, and between Class 1E cables and non-Class 1E cables.

7.a The RHRS is provided with isolation valves in each pump suction piping that are prevented from being opened to the RCS above the pressure setpoint. CC

7.b Deleted DD

8.a The RHRS cools the reactor by removing decay heat, and other residual heat from the reactor core and the RCS during the normal plant shutdown and cool down conditions.

8.b Deleted

8.c Deleted

8.d The RHRS provides cooling for the in-containment RWSP during normal plant operations. EE

8.e The RHRS provides low temperature overpressure protection (LTOP) for the RCS during shutdown operation. FF

8.f The CS/RHR pumps have sufficient net positive suction head (NPSH). GG

9. Controls are provided in the MCR to open and close the remotely operated valves identified in Table 2.4.5-2. HH

10.a) The motor-operated and check valves identified in Table 2.4.5-2 as having an active safety function perform an active safety function to change position as indicated in the table. II

10.b) After loss of motive power, the remotely operated valves, identified in Table 2.4.5-2, assume the indicated loss of motive power position.

11. Controls are provided in the MCR to start and stop the CS/RHR pumps identified in Table 2.4.5-4. HH

12. Alarms and displays identified in Table 2.4.5-4 are provided in the MCR. JJ

13. Alarms, displays and controls identified in Table 2.4.5-4 are provided in the RSC.

14. The as-built piping identified in Table 2.4.5-3 as designed for LBB meets the LBB criteria, or an evaluation is performed of the protection from the dynamic effects of a rupture of the line. KK

15.a Deleted LL

15.b Deleted

~~System Operation~~

~~As described under system purpose and functions and key design features, the RHRS is designed to operate during plant startup, normal power operation, plant shutdown and cooldown, and at the beginning of a refueling operation.~~ MM

~~**Alarms, Displays, and Controls**~~

~~Table 2.4.5-4 identifies alarms, displays, and controls associated with the RHRS that are located in the main control room.~~ NN

~~**Logic**~~

~~The RHRS is provided with isolation valves in each suction line with interlock capabilities to prevent them from being opened to the RCS above the pressure setpoint.~~ OO

~~To prevent loss of RCS inventory during mid-loop operation, the low-pressure letdown line isolation valves are automatically closed and the CVCS is isolated from the RHRS, after receiving a RCS loop low-level signal.~~

~~**Interlocks**~~

~~The RHRS is provided with isolation valves in each pump suction and discharge line with interlock capabilities to prevent them from being opened to the RCS above the pressure setpoint. A second RHRS interlock is provided to preclude the simultaneous opening of both the RHRS and CSS discharge line valves.~~ PP

~~**Class 1E Electrical Power Sources and Divisions**~~

~~The RHRS equipment identified in Table 2.4.5-2 as Class 1E is powered from their respective Class 1E divisions, and separation is provided between Class 1E divisions, and between Class 1E divisions and non-Class 1E cable~~. QQ

~~**Equipment to be Qualified for Harsh Environments**~~

~~The equipment identified in Table 2.4.5-2 as being qualified for a harsh environment can withstand the environmental conditions that would exist before, during, and following a design basis event without loss of safety function for the time required to perform the safety function.~~ RR

~~**Interface Requirements**~~

~~There are no safety-related interfaces with systems outside of the certified design.~~ SS

~~**Numeric Performance Values**~~

~~When necessary to demonstrate satisfaction of a design commitment, numeric performance values for selected components have been specified as ITAAC acceptance criteria in Table 2.4.5-5.~~ TT

2.4.5.2 Inspections, Tests, Analyses, and Acceptance Criteria

Table 2.4.5-5 describes the ITAAC for the RHRS. The ITAAC associated with those components shared with the CSS performing their containment spray functions are provided in Subsection 2.11.3.

The ITAAC associated with the RHRS equipment, components, and piping and that comprise a portion of the CIS are described in Table 2.11.2-2.

Table 2.4.5-1 Residual Heat Removal System Location of Equipment and Piping

Equipment and Piping Name	Location
CS/RHR pumps	Reactor Building
CS/RHR heat exchangers	Reactor Building
RHRS suction piping and valves on the RCS side between the hot legs, up to and including the second motor operated valves	Containment
RHRS discharge piping and valves on the RCS side between the cold legs, up to and including the second check valves	Containment
RHRS piping and valves on the RHR side from and excluding the second motor operated valves to and excluding the second check valves	Containment and Reactor Building
All RHRS piping and valves not mentioned above up to and including the valves interfacing with systems of a lower classification.	Containment and Reactor Building

Table 2.4.5-2 Residual Heat Removal System Equipment Characteristics (Sheet 1 of 2)

Equipment Name	Tag No.	ASME Code Section III Class	Seismic Category I	Remotely Operated Valve	Class 1E/ Qual. For Harsh Envir.	PSMS Control	Active Safety Function	Loss of Motive Power Position
CS/RHR Pumps	RHS-MPP-001 A, B, C, D	2	Yes	-	Yes/-	Containment Spray Actuation	Start	-
CS/RHR Heat Exchangers - tube side	RHS-MHX-001 A, B, C, D	2	Yes	-	-/-	-	-	-
CS/RHR Heat Exchangers - CCW side		3	Yes	-	-/-	-	-	-
1st CS/RHR Pump Hot Leg Isolation Valves	RHS-MOV-001A, B, C, D	1	Yes	Yes	Yes/Yes	-	Transfer Closed/ Transfer Open	As Is
2nd CS/RHR Pump Hot Leg Isolation Valves	RHS-MOV-002A, B, C, D	1	Yes	Yes	Yes/Yes	-	Transfer Closed/ Transfer Open	As Is
CS/RHR Pump Suction Relief Valves	RHS-SRV-003A, B, C, D	2	Yes	No	-/-	-	-	-
CS/RHR Pump Suction Check Valves	RHS-VLV-004A, B, C, D	2	Yes	No	-/-	-	Transfer Open	-
RHR Discharge Line Containment Isolation Valves outside containment	RHS-MOV-021A, B, C, D	2	Yes	Yes	Yes/No	Remote Manual	Transfer Closed/ Transfer Open	As Is
RHR Discharge Line Containment Isolation Valves inside containment	RHS-VLV-022A, B, C, D	2	Yes	No	-/-	-	Transfer Open/ Transfer Closed	-

Table 2.4.5-2 Residual Heat Removal System Equipment Characteristics(Sheet 2 of 2)

Equipment Name	Tag No.	ASME Code Section III Class	Seismic Category I	Remotely Operated Valve	Class 1E/ Qual. For Harsh Envir.	PSMS Control	Active Safety Function	Loss of Motive Power Position
CS/RHR Pump Full-Flow Test Line Stop Valves	RHS-MOV-025A, B, C, D	2	Yes	Yes	Yes/Yes	Remote Manual	Transfer Open/ Transfer Closed	As Is
RHR Flow Control Valves	RHS-MOV-026A, B, C, D	2	Yes	Yes	Yes/Yes	Remote Manual	Transfer Open/ Transfer Closed	As Is
2nd RHR Discharge Line Check Valves	RHS-VLV-027A, B, C, D	1	Yes	No	-/-	-	Transfer Open	-
1st RHR Discharge Line Check Valves	RHS-VLV-028A, B, C, D	1	Yes	No	-/-	-	Transfer Open	-
Containment Spray / Residual Heat Removal Pump Discharge Flow	RHS-FT-011, 021, 031, 041	—	Yes	—	Yes/No	-	—	—
Containment Spray / Residual Heat Removal Pump Minimum Flow	RHS-FT-014, 024, 034, 044	—	Yes	—	Yes/No	-	—	—
Containment Spray / Residual Heat Removal Pump Suction Pressure	RHS-PT-010, 020, 030, 040	—	Yes	—	Yes/No	-	—	—
Containment Spray / Residual Heat Removal Pump Discharge Pressure	RHS-PT-011, 021, 031, 041	—	Yes	—	Yes/No	-	—	—
Containment Spray / Residual Heat Removal Heat Exchanger Outlet Temperature	RHS-TE-014, 024, 034, 044	—	Yes	—	Yes/No	-	—	—

NOTE:
Dash (-) indicates not applicable

Table 2.4.5-3 Residual Heat Removal System Piping Characteristics

Pipe Line Name	ASME Code Section III Class	Leak Before Break	Seismic Category I
RHRS suction piping and valves on the RCS side between the hot legs, up to and including the motor operated valves RHS-MOV-002 A, B, C, D	1	Yes	Yes
RHRS discharge piping and valves on the RCS side between the cold legs, up to and including the check valves RHS-VLV-027 A, B, C, D	1	Yes	Yes
RHRS piping and valves on the RHR side from and excluding the motor operated valves RHS-MOV-002 A, B, C, D to and excluding the second check valves	2	No	Yes
All RHRS piping and valves not mentioned above up to and including the valves interfacing with systems of a lower classification.	2	No	Yes

Table 2.4.5-4 Residual Heat Removal System Equipment Alarms, Displays, and Control Functions

Equipment Name	MCR/RSC Alarm	MCR Display	MCR/RSC Control Function	RSC Display
CS/RHR Pumps RHS-MPP-001A, B, C, D	No	Yes	Yes	Yes
1st and 2nd CS/RHR Pump Hot Leg Isolation Valves RHS-MOV-001A, B, C, D and -002A, B, C, D	Yes	Yes	Yes	Yes
RHR Discharge Line Containment Isolation Valves RHS-MOV-021A, B, C, D	No	Yes	Yes	Yes
RHR Flow Control Valves RHS-MOV-026A, B, C, D	No	Yes	Yes	Yes
CS/RHR Pump Full-flow Test Line Stop Valves RHS-MOV-025A, B, C, D	No	Yes	Yes	Yes
CS/RHR Heat Exchanger Inlet Temperature RHS-TE-012, 022, 032, 042	No	Yes	No	Yes
CS/RHR Hx Outlet Temperature RHS-TE-014, 024, 034, 044	No	Yes	No	Yes
CS/RHR Pump Discharge Flow RHS-FT-011, 021, 031, 041	Yes	Yes	No	Yes
CS/RHR Pump Minimum Flow RHS-FT-014, 024, 034, 044	No	Yes	No	Yes
CS/RHR Pump Discharge Pressure RHS-PT-011, 021, 031, 041	Yes	Yes	No	Yes
CS/RHR Pump Suction Pressure RHS-PT-010, 020, 030, 040	No	Yes	No	Yes

Table 2.4.5-5 Residual Heat Removal System Inspections, Tests, Analyses, and Acceptance Criteria (Sheet 1 of 8)

	Design Commitment		Inspections, Tests, Analyses		Acceptance Criteria
1.a	The functional arrangement of the RHRS is as described in the Design Description of Subsection 2.4.5.1 and in Table 2.4.5-1 and as shown ~~on~~ in Figure 2.4.5-1.	1.a	~~An i~~Inspection of the as-built RHRS will be performed.	1.a	The as-built RHRS conforms to the functional arrangement as described in the Design Description of ~~this~~ Subsection 2.4.5.1 and in Table 2.4.5-1 and as shown in Figure 2.4.5-1.
1.b	Each mechanical division of the RHRS (Divisions A, B, C & D) is physically separated from the other divisions with the exception of inside the containment so as not to preclude accomplishment of the safety function.	1.b	Inspections and analysis of the as-built RHRS will be performed.	1.b	A report exists and concludes that ~~E~~each mechanical division of the as-built RHRS is physically separated from other mechanical divisions of the system by structural barriers with the exception of inside the containment so as to assure that the functions of the safety related system are maintained.
2.a.i	The ASME Code Section III components of the RHRS, identified in Table 2.4.5-2, are fabricated, installed and inspected in accordance with ASME Code Section III requirements.	2.a.i	~~An i~~Inspection of the as-built ASME Code Section III components of the RHRS, identified in Table 2.4.5-2, will be performed.	2.a.i	The ASME Code Section III data report(s) (certified, when required by ASME Code) and inspection reports (including N-5 Data Reports where applicable) exist and conclude that the as-built ASME Code Section III components of the RHRS identified in Table 2.4.5-2 are fabricated, installed, and inspected in accordance with ASME Code Section III requirements.
2.a.ii	The ASME Code Section III components of the RHRS identified in Table 2.4.5-2 are reconciled with the design requirements.	2.a.ii	A reconciliation analysis of the components in Table 2.4.5-2 using as-designed and as-built information and ASME Code Section III design report(s) (NCA-3550) will be performed.	2.a.ii	The ASME Code Section III design report(s) (certified, when required by ASME Code) exist and conclude that design reconciliation has been completed in accordance with ASME Code, for the as-built ASME Code Section III components of the RHRS identified in Table 2.4.5-2. ~~are reconciled with the design requirements.~~ The report documents the results of the reconciliation analysis.

Table 2.4.5-5 Residual Heat Removal System Inspections, Tests, Analyses, and Acceptance Criteria (Sheet 2 of 8)

Design Commitment		Inspections, Tests, Analyses		Acceptance Criteria	
2.b.i	The ASME Code Section III piping of the RHRS, including supports, identified in Table 2.4.5-3, is fabricated, installed, and inspected in accordance with ASME Code Section III requirements.	2.b.i	~~An i~~Inspection of the as-built ASME Code Section III piping of the RHRS, including supports, identified in Table 2.4.5-3, will be performed.	2.b.i	The ASME Code Section III data report(s) (certified when required by ASME Code) and inspection reports (including N-5 Data Reports where applicable) exist and conclude that the as-built ASME Code Section III piping of the RHRS, including supports, identified in Table 2.4.5-3 is fabricated, installed, and inspected in accordance with ASME Code Section III requirements.
2.b.ii	The ASME Code Section III piping of the RHRS, including supports, identified in Table 2.4.5-3 are reconciled with the design requirements.	2.b.ii	A reconciliation analysis of the piping of the RHRS, including supports, identified in Table 2.4.5-3, using as-designed and as-built information and ASME Code Section III design report(s) (NCA-3550) will be performed.	2.b.ii	The ASME Code Section III design report(s) (certified, when required by ASME Code) exist and conclude that design reconciliation has been completed in accordance with the ASME Code, for the as-built ASME Code Section III piping of the RHRS, including supports, identified in Table 2.4.5-3 ~~is reconciled with the design requirements~~. The report documents the results of the reconciliation analysis.
3.a	Pressure boundary welds in ASME Code Section III components, identified in Table 2.4.5-2, meet ASME Code Section III requirements for non-destructive examination of welds.	3.a	Inspections of the as-built pressure boundary welds in ASME Code Section III components identified in Table 2.4.5-2, will be performed in accordance with the ASME Code Section III.	3.a	The ASME Code Section III code reports exist and conclude that the ASME Code Section III requirements are met for non-destructive examination of the as-built pressure boundary welds in ASME Code Section III components identified in Table 2.4.5-2.

3.b	Pressure boundary welds in ASME Code Section III piping, identified in Table 2.4.5-3, meet ASME Code Section III requirements for non-destructive examination of welds.	3.b	Inspections of the as-built pressure boundary welds in ASME Code Section III piping identified in Table 2.4.5-3, will be performed in accordance with the ASME Code Section III.	3.b	The ASME Code Section III code reports exist and conclude that the ASME Code Section III requirements are met for non-destructive examination of the as-built pressure boundary welds in ASME Code Section III piping identified in Table 2.4.5-3.

Table 2.4.5-5 Residual Heat Removal System Inspections, Tests, Analyses, and Acceptance Criteria (Sheet 3 of 8)

Design Commitment		Inspections, Tests, Analyses		Acceptance Criteria	
4.a	The ASME Code Section III components, identified in Table 2.4.5-2, retain their pressure boundary integrity at their design pressure.	4.a	A hydrostatic test will be performed on the as-built components, identified in Table 2.4.5-2, required by the ASME Code Section III to be hydrostatically tested.	4.a	ASME Code Data Report(s) exist and conclude that ~~T~~the results of the hydrostatic test of the as-built components identified in Table 2.4.5-2 as ASME Code Section III conform ~~with~~ to the requirements of the ASME Code Section III.
4.b	The ASME Code Section III piping, identified in Table 2.4.5-3, retains its pressure boundary integrity at its design pressure.	4.b	A hydrostatic test will be performed on the as-built piping, identified in Table 2.4.5-3, required by the ASME Code Section III to be hydrostatically tested.	4.b	ASME Code Data Report(s) exist and conclude that ~~T~~the results of the hydrostatic test of the as-built piping identified in Table 2.4.5-3 as ASME Code Section III conform to the requirements of the ASME Code Section III.
5.a	The seismic Category I equipment, identified in Table 2.4.5-2, ~~is designed to~~can withstand seismic design basis loads without loss of safety function.	5.a.i	Inspections will be performed to verify that the as-built seismic Category I ~~as-built~~ equipment identified in Table 2.4.5-2 is located in ~~the containment and the reactor building~~a seismic Category I structure.	5.a.i	The as-built seismic Category I ~~as-built~~ equipment identified in Table 2.4.5-2 is located in ~~the containment and the reactor building~~a seismic Category I structure.
		5.a.ii	Type tests, analyses ~~and/~~or a combination of type tests and analyses of seismic Category I equipment identified in Table 2.4.5-2 will be performed using analytical assumptions, or will be performed under conditions, which bound the seismic design basis requirements.	5.a.ii	~~The results of the type tests and/or analyses~~A report exists and concludes that the seismic Category I equipment identified in Table 2.4.5-2 can withstand seismic design basis loads without loss of safety function.
		5.a.iii	Inspections and analyses will be performed ~~on the~~to verify that the as-built seismic Category I equipment identified in Table 2.4.5-2, including anchorages, is seismically bounded by the tested or analyzed conditions.	5.a.iii	~~The as-built~~A report exists and concludes that the as-built seismic Category I equipment identified in Table 2.4.5-2, including anchorages, is seismically bounded by the tested or analyzed conditions.

5.b	~~Each of t~~The seismic Category I piping, including supports, identified in Table 2.4.5-3 ~~is designed to~~can withstand ~~combined normal and~~ seismic design basis loads without a loss of its safety function.	5.b.i	Inspections will be performed to verify that the as-built seismic Category I piping, including supports, identified in Table 2.4.5-3 ~~are~~ is supported by a seismic Category I structure(s).	5.b.i	~~Reports(s) document that each of t~~The as-built seismic Category I piping, including supports, identified in Table 2.4.5-3 is supported by a seismic Category I structure(s).

Table 2.4.5-5 Residual Heat Removal System Inspections, Tests, Analyses, and Acceptance Criteria (Sheet 4 of 8)

Design Commitment		Inspections, Tests, Analyses		Acceptance Criteria	
		5.b.ii	Inspections and analyses will be performed to verify~~for the existence of a report verifying~~ that the as-built seismic Category I piping, including supports, identified in Table 2.4.5-3 can withstand ~~combined normal and~~ seismic design basis loads without a loss of its safety function.	5.b.ii	A report exists and concludes that ~~each of~~ the as-built seismic Category I piping, including supports, identified in Table 2.4.5-3 can withstand ~~combined normal and~~ seismic design basis loads without a loss of its safety function.
6.a	The Class 1E equipment identified in Table 2.4.5-2 as being qualified for a harsh environment ~~is designed to~~can withstand the environmental conditions that would exist before, during, and following a design basis ~~event~~ accident without loss of safety function for the time required to perform the safety function.	6.a.i	Type tests ~~and/~~or a combination of type tests and analyses using the design environmental conditions, or under conditions which bound, the design environmental conditions, will be performed on ~~the~~ Class 1E equipment identified in Table 2.4.5-2 as being qualified for ~~located in~~ a harsh environment.	6.a.i	~~The results of the type tests and/or analyses~~A report exists and concludes that the Class 1E equipment identified in Table 2.4.5-2 as being qualified for a harsh environment can withstand the environmental conditions that would exist before, during, and following a design basis ~~event~~ accident without loss of safety function for the time required to perform the safety function.
		6.a.ii	Inspection~~s~~ will be performed of ~~on~~ the as-built Class 1E equipment identified in Table 2.4.5-2 as being qualified for a harsh environment and the associated wiring, cables, and terminations located in a harsh environment.	6.a.ii	The as-built Class 1E equipment and the associated wiring, cables, and terminations identified in Table 2.4.5-2 as being qualified for a harsh environment are bounded by type tests ~~and/~~or a combination of type tests and analyses.
6.b	~~The~~ Class 1E equipment, identified in Table 2.4.5-2, is powered from its ~~their~~ respective Class 1E division.	6.b	A test will be performed on each division of the as-built Class 1E equipment identified in Table 2.4.5-2 by providing a simulated test signal only in the Class 1E division under test.	6.b	The simulated test signal exists at the as-built Class 1E equipment identified in Table 2.4.5-2 under test.

6.c	Separation is provided between redundant divisions of RHRS Class 1E ~~divisions~~cables, and between Class 1E ~~divisions~~ cables and non-Class 1E cables.	6.c	Inspections of the as-built Class 1E divisional cables will be performed.	6.c	Physical separation or electrical isolation is provided in accordance with RG 1.75, between the as-built cables of redundant Class 1E divisions and between Class 1E ~~divisions~~ cables and non-Class 1E cables.

Table 2.4.5-5 Residual Heat Removal System Inspections, Tests, Analyses, and Acceptance Criteria (Sheet 5 of 8)

	Design Commitment		Inspections, Tests, Analyses		Acceptance Criteria
7.a	The RHRS is provided with isolation valves in each pump suction piping ~~with interlock capabilities to~~ that are prevented ~~them~~ from being opened to the RCS above the pressure setpoint.	7.a	Tests will be performed using a simulated test signal.	7.a	The interlocks prevent the as-built RHRS isolation valves in each pump suction piping identified in Table 2.4.5-2 from being opened to the RCS above the pressure setpoint.
7.b	Deleted.	7.b	Deleted.	7.b	Deleted.
8.a	The RHRS ~~is designed to~~ cools the reactor by removing decay heat, and other residual heat from the reactor core and the RCS during the normal plant shutdown and cool down conditions.	8.a.i	An inspection ~~will be~~and analysis are performed ~~for the existence of a report~~ that determines the heat removal capability of the as-built CS/RHR heat exchangers.	8.a.i	A report exists and concludes that ~~The~~ the product of the overall heat transfer coefficient and the effective heat transfer area, UA, of each as-built CS/RHR heat exchanger is greater than or equal to 1.852×10^6 Btu/hr-°F.
		8.a.ii	Tests will be performed to confirm that the as-built RHRS can provide flow through the CS/RHR heat exchangers when the pump suction is aligned to the RCS hot leg and the discharge is aligned to RCS cold leg, with the RCS at atmospheric pressure.	8.a.ii	Each as-built CS/RHR pump is sized to deliver 3,000 gpm at a discharge head of 410 ft, and provides at least 2645 gpm to the RCS when the RCS is at atmospheric pressure.
8.b	~~The RHRS is designed to provide a portion of the RCS flow to the CVCS during normal plant cool down operations.~~Deleted	8.b	~~A test of the as-built RHRS will be performed by aligning a flow path from the CS/RHR pumps to the CVCS.~~Deleted	8.b	~~The as-built CS/RHR pump provides RCS flow to the CVCS.~~Deleted
8.c	~~The RHRS is designed to transfer borated water from the RWSP to the refueling cavity at the beginning of a refueling operation.~~Deleted	8.c	~~A test of the as-built RHRS will be performed by aligning a flow path to the CS/RHR pumps from the RWSP.~~Deleted	8.c	~~The as-built CS/RHR pump transfer water from the RWSP to the refueling cavity.~~Deleted
8.d	The RHRS ~~is designed to~~ provides cooling for the in-containment RWSP during normal plant operations.	8.d	A test will be performed to confirm that the as-built RHRS can provide flow through the CS/RHR heat exchangers when the pump suction is aligned to the RWSP and the discharge is aligned to the RWSP.	8.d	Each ~~operating~~ as-built CS/RHR pump ~~provides~~ delivers at least 2645 gpm when aligned to the RWSP.

Table 2.4.5-5 Residual Heat Removal System Inspections, Tests, Analyses, and Acceptance Criteria (Sheet 6 of 8)

Design Commitment		Inspections, Tests, Analyses		Acceptance Criteria	
8.e	The RHRS provides low temperature overpressure~~ization~~ protection (LTOP) for the RCS during shutdown operation.	8.e.i	Inspections will be conducted on the as-built CS/RHR pump suction relief valves to confirm that the value of the vendor code plate rating is greater than or equal to system relief requirements.	8.e.i	The rated capacity recorded on the valve ASME Code plates of the as-built valve is not less than the flow required to provide low temperature overpressure protection for the as-built RCS, as determined by the LTOP system evaluation based on the pressure-temperature curves developed for the as-procured reactor vessel material.
		8.e.ii	Tests and~~/or~~ analysis in accordance with the ASME Code Section III will be performed to confirm set pressure.	8.e.ii	~~The~~ A report exists and concludes that the relief valve opens at a pressure not greater than the set pressure required to provide low temperature overpressure protection for the RCS, as determined by the LTOP system evaluation based on the pressure-temperature curves developed for the as-procured reactor vessel material.

8.f	The CS/RHR pumps have sufficient net positive suction head (NPSH).	8.f	Tests to measure the as-built CS/RHR pump suction pressure will be performed. Inspections and analysis to determine NPSH available to each CS/RHR pump will be performed. The analysis will consider vendor test results of required NPSH and the effects of: - pressure losses for pump inlet piping and components, - suction from the RWSP water level at the minimum value~~;~~. ~~- vendor test results of required NPSH.~~	8.f	~~The~~ A report exists and concludes that the as-built ~~system meets the design, and the analysis confirms that the~~ NPSH available to each CS/RHR pump is ~~at least 17.9 feet at 3650 gpm.~~greater than the NPSH required.

Table 2.4.5-5 Residual Heat Removal System Inspections, Tests, Analyses, and Acceptance Criteria (Sheet 7 of 8)

Design Commitment	Inspections, Tests, Analyses	Acceptance Criteria
9. Controls ~~exist~~ are provided in the MCR to open and close the remotely operated valves identified in Table 2.4.5-2.	9. Tests will be performed on the as-built remotely operated valves ~~listed~~ identified in Table 2.4.5-2 using controls in the as-built MCR.	9. Controls ~~exist~~ in the as-built MCR ~~to~~ open and close the as-built remotely operated valves listed in Table 2.4.5-2.
10.a The motor-operated and check valves, identified in Table 2.4.5-2~~,~~ as having an active safety function perform an active safety function to change position as indicated in the table.	10.a.i ~~Tests or t~~Type tests or a combination of type tests and analyses of the motor-operated valves identified in Table 2.4.5-2 as having an active safety function will be performed that demonstrate the capability of the valve to operate under its design conditions.	10.a.i A report exists and concludes that ~~E~~each motor-operated valve identified in Table 2.4.5-2 as having an active safety function changes position as indicated in Table 2.4.5-2 under design conditions.
	10.a.ii Tests of the as-built motor-operated valves identified in Table 2.4.5-2 as having an active safety function will be performed under pre-operational flow, differential pressure, and temperature conditions.	10.a.ii Each as-built motor-operated valve identified in Table 2.4.5-2 as having an active safety function changes position as indicated in Table 2.4.5-2 under pre-operational test conditions.
	10.a.iii Inspections will be performed of the as-built motor-operated and air-operated valves identified in Table 2.4.5-2 as having an active safety function.	10.a.iii Each as-built motor-operated and air-operated valve identified in Table 2.4.5-2 as having an active safety function is bounded by the type tests, or a combination of type tests and analyses.
	10.a.~~iii~~iv Tests of the as-built check valves ~~with active safety functions~~ identified in Table 2.4.5-2 as having an active safety function will be performed under pre-operational test pressure, temperature and fluid flow conditions.	10.a.~~iii~~iv Each as-built check valve identified in Table 2.4.5-2 as having an active safety function changes position as indicated in Table 2.4.5-2.

10.b	After loss of motive power, the remotely operated valves, identified in Table 2.4.5-2, assume the indicated loss of motive power position.	10.b	Tests of the as-built remotely operated valves identified in Table 2.4.5-2 will be performed under the conditions of loss of motive power.	10.b	Upon loss of motive power, each as-built remotely operated valve identified in Table 2.4.5-2 assumes the indicated loss of motive power position.
11.	Controls ~~exist~~ are provided in the MCR to start and stop the CS/RHR pumps identified in Table 2.4.5-4.	11.	Tests will be performed on the as-built CS/RHR pumps identified in Table 2.4.5-4 using controls in the as-built MCR.	11.	Controls ~~exist~~ in the as-built MCR ~~to~~ start and stop the as-built CS/RHR pumps ~~listed~~ identified in Table 2.4.5-4.
12.	~~MCR a~~Alarms and displays ~~of the parameters~~ identified in Table 2.4.5-4 ~~can be retrieved~~ are provided in the MCR.	12.	Inspection~~s~~ will be performed for retrievability of the ~~RHRS parameters in the as-built~~alarms and displays identified in Table 2.4.5-4 in the as-built MCR.	12.	~~MCR a~~Alarms and displays identified in Table 2.4.5-4 can be retrieved in the as-built MCR.

Table 2.4.5-5 Residual Heat Removal System Inspections, Tests, Analyses, and Acceptance Criteria (Sheet 8 of 8)

Design Commitment		Inspections, Tests, Analyses		Acceptance Criteria	
13.	~~RSC a~~Alarms, displays and controls ~~are~~ identified in Table 2.4.5-4 are provided in the RSC.	13.i	Inspection~~s of the as-built RSC alarms, displays and controls~~ will be performed for retreivability of the alarms and displays identified in Table 2.4.5-4 in the as-built RSC.	13.i	Alarms~~,~~ and displays ~~and controls exist on the as-built RSC as~~ identified in Table 2.4.5-4 can be retrieved in the as-built RSC.
		13.ii	Tests of the as-built RSC control~~s~~ functions identified in Table 2.4.5-4 will be performed.	13.ii	Controls ~~exist to operate each~~ in the as-built RSC ~~control function~~operate the as-built equipment identified in Table 2.4.5-4 with an RSC control function.
14.	~~Each of t~~The as-built piping identified in Table 2.4.5-3 as designed for LBB meets the LBB criteria, or an evaluation is performed of the protection from the dynamic effects of a rupture of the line.	14.	Inspections of the as-built piping identified in Table 2.4.5-3 will be performed based on the evaluation report for ~~the~~ LBB or for the evaluation of the protection from dynamic effects of a pipe break, as specified in Section 2.3.	14.	~~The~~ An LBB evaluation report exists and concludes that the LBB acceptance criteria are met by the as-built piping identified in Table 2.4.5-3 and piping~~e~~ materials, or a pipe break hazards analysis report exists and concludes that protection from the dynamic effects of a line break is provided. ~~for the dynamic effects of the piping break.~~
15.a	Deleted~~The materials of construction of the ASME Code Section III, Class 1 components, identified in Table 2.4.5-2, are in accordance with ASME Code requirements.~~	15.a	Deleted~~Inspection of the certified material test reports will be performed.~~	15.a	Deleted~~The materials of construction of the ASME Code Section III, Class 1 components identified in Table 2.4.5-2 conform to the requirements of the ASME Code.~~
15.b	Deleted~~The materials of construction of the ASME Code Section III, Class 1 piping, identified in Table 2.4.5-3, are in accordance with ASME Code requirements.~~	15.b	Deleted~~Inspection of the certified material test reports will be performed.~~	15.b	Deleted~~The materials of construction of the ASME Code Section III, Class 1 piping identified in Table 2.4.5-3 conform to the requirements of the ASME Code.~~

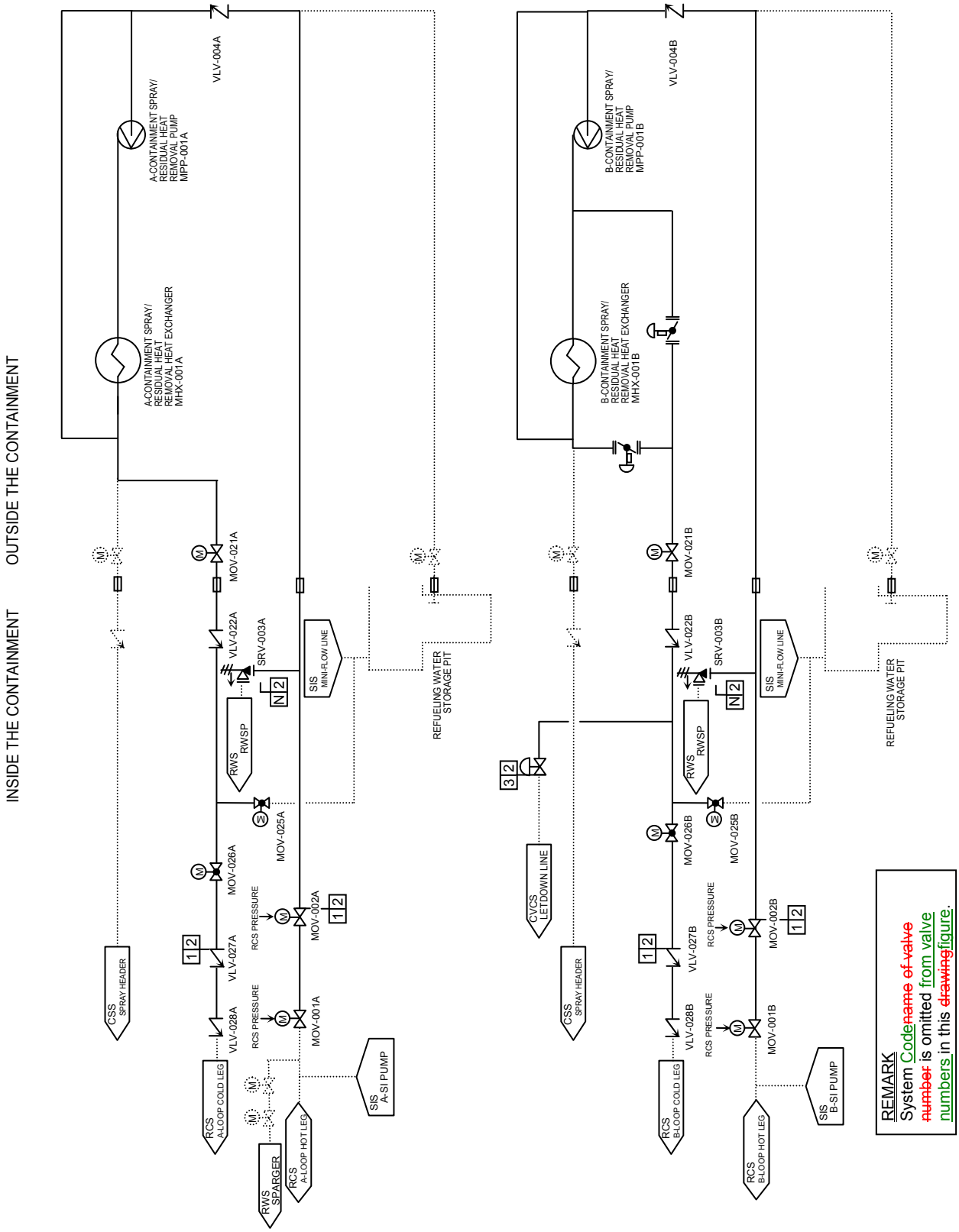

Figure 2.4.5-1 Residual Heat Removal System (Sheet 1 of 2)

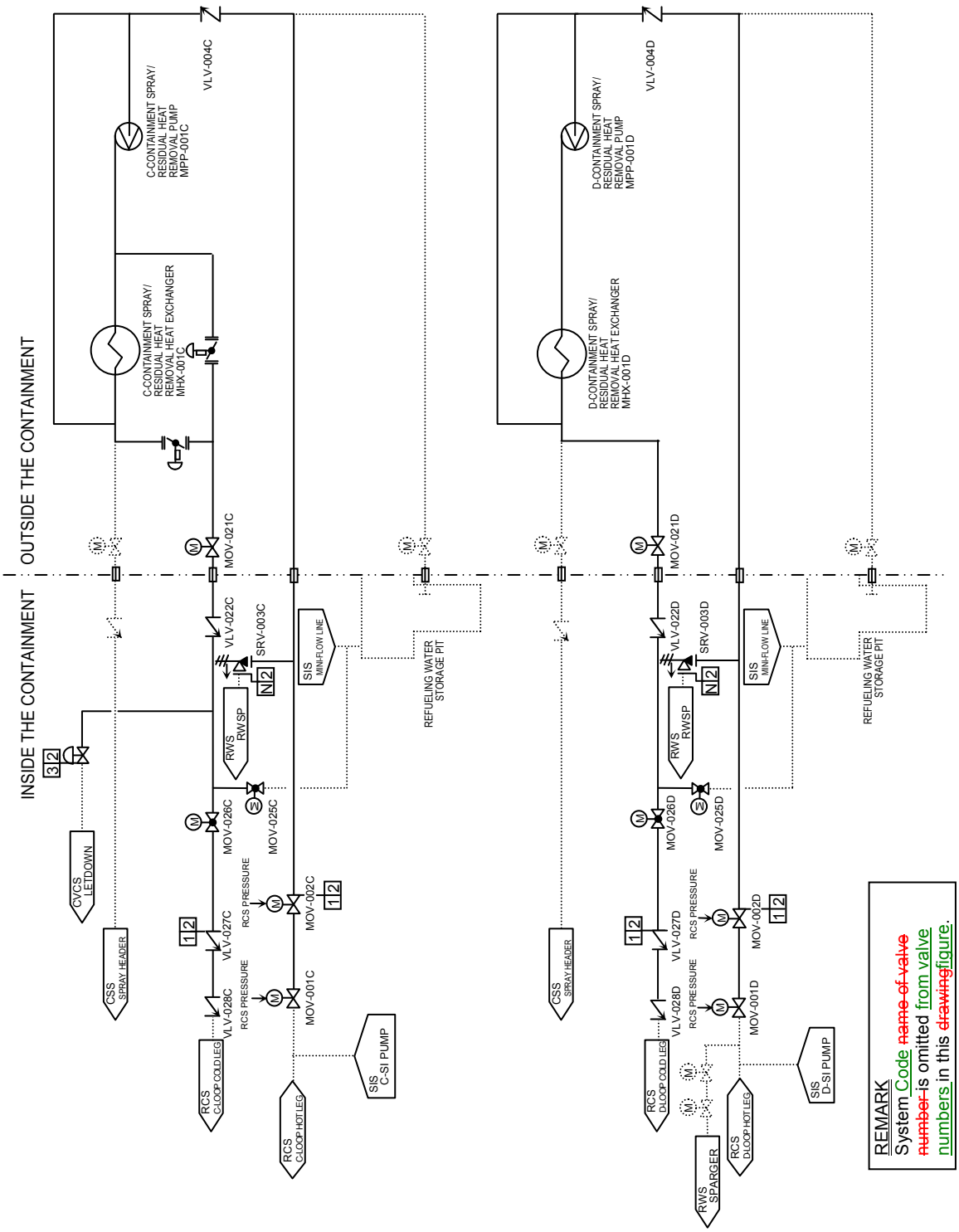

Figure 2.4.5-1 Residual Heat Removal System (Sheet 2 of 2)

2.4 REACTOR SYSTEMS

2.4.7 Reactor Coolant Pressure Boundary Leakage Detection System

2.4.7.1 Design Description

The reactor coolant pressure boundary (RCPB) leak detection system provides a means of detecting and, to the extent practical, identifying the source of reactor coolant leakage and monitoring leaks from the reactor coolant and associated systems. The system is classified as non-safety related.~~The reactor coolant pressure boundary (RCPB) leakage detection system provides a mean of detecting and monitoring the reactor coolant leakage by measuring the leakage rate or common leakage equivalent. The following leak detection methods quantify the leakage rate and provide information to locate the leakage in order to detect unidentified coolant leakage into containment:~~ A

1. Indications of unidentified coolant leakage into the containment are provided by an air cooler condensate flow rate monitoring system, a containment sump level monitoring system and containment airborne particulate radioactivity monitor. These leak detection system instruments provide alarms and displays in the MCR indicating reactor coolant pressure boundary leakage.

~~• Containment sump level~~
~~• Condensate flow rate from air coolers~~
~~• Containment airborne particulate radioactivity~~

~~Detecting and monitoring the leakage are performed using instruments and components. Reactor coolant pressure boundary leakage detection methods provide the nonsafety-related function of detecting leaks from the reactor coolant system.~~ B

2.4.7.2 Inspections, Tests, Analyses, and Acceptance Criteria

Table 2.4.7-1 describes the ITAAC for reactor coolant pressure boundary leakage detection system.

Table 2.7.6.6-2 describes additional ITAAC for the containment airborne particulate radioactivity monitors. C

Table 2.4.7-1 Reactor Coolant Pressure Boundary Leakage Detection System Inspections, Tests, Analyses, and Acceptance Criteria

Design Commitment	Inspections, Tests, Analyses	Acceptance Criteria
1. Indications of unidentified coolant leakage into the containment are provided by an air cooler condensate flow rate monitoring system, a containment sump level monitoring system and containment airborne particulate radioactivity monitor. These leak detection system instruments provide alarms and displays in the MCR indicating reactor coolant pressure boundary leakage.~~Reactor coolant pressure boundary leakage detection methods provide the nonsafety-related function of detecting leaks from the reactor coolant system.~~	1.i Inspection will be performed for retrievability of the reactor coolant pressure boundary leakage detection alarms and displays from the as-built containment sump level LMS-LT-093A, B, the air cooler condensate standpipe level channel LMS-LT-092, and the containment airborne particulate radioactivity monitor RMS-RE-040 ~~displays of the following channels~~ in the MCR. ~~• Containment sump level channels LMS-LT-093A,B~~ ~~• Standpipe level channel LMS-LT-092~~	1.i Alarms and displays from the as-built reactor coolant pressure boundary leakage detection containment sump level channels LMS-LT-093A, B, the air cooler condensate standpipe level channel LMS-LT-092, and the containment airborne particulate radioactivity monitor RMS-RE-040 ~~Nonsafety-related displays of the following channels~~ can be retrieved in the as-built MCR. ~~• Containment sump level channels LMS-LT-093A,B~~ ~~• Standpipe level channel LMS-LT-092~~
	1.ii Testing, by adding water to the as-built containment sump, and analysis, will be performed ~~by adding water to the sump and observing display of sump level~~.	1.ii A report exists and concludes that the as-built sump level channels LMS-LT-093A, B have the capability to detect a change in leakage rate of 0.5 gpm or greater within an hour~~can detect level change due to adding water, which corresponds to required sensitivity, response time and set point~~.
	1.iii Testing, by adding water to the as-built condensate standpipe, and analysis, will be performed ~~by adding water to the standpipe and observing display of standpipe level~~.	1.iii A report exists and concludes that the as-built standpipe level channel LMS-LT-092 has the capability to detect a change in leakage rate of 0.5 gpm or greater within an hour~~can detect level change due to adding water, which corresponds to required sensitivity, response time and set point~~.
	1.iv Tests and analyses of the as-built containment airborne particulate radioactivity monitor RMS-RE-040 will be	1.iv A report exists and concludes that the as-built containment airborne particulate radioactivity monitor RMS-

	performed.~~See Tier1 Material sections: Section 2.7.6.6 for the containment radiation particulate monitor RMS-RE-040~~	RE-040 has the required sensitivity and response time, which corresponds to the capability for detecting a change in leakage rate of 0.5 gpm or greater within 1 hour. ~~See Tier1 Material sections: Section 2.7.6.6 for the containment radiation particulate monitor RMS-RE-040~~
2. Deleted.~~The functional arrangement of the reactor coolant pressure boundary leakage detection monitors is as described in Subsection 2.7.6.6 Design Description.~~	2. Deleted.~~An inspection of the as-built RCPB leakage detection monitors will be performed.~~	2. Deleted.~~The as-built RCPB leakage detection monitors conform to the functional arrangement as described in the Design Description of this Subsection 2.7.6.6.~~