# DOW CHEMICAL TRIGA
# RESEARCH REACTOR
# LICENSE NO. R-108
# DOCKET NO. 50-264

## REVISED SAFETY ANALYSIS REPORT, TECHNICAL SPECIFICATIONS, AND RAI RESPONSES (2/11/2011)

REDACTED VERSION*

SECURITY-RELATED INFORMATION REMOVED

*REDACTED TEXT AND FIGURES BLACKED OUR OR DENOTED BY BRACKETS

The Dow Chemical Company
Midland, Michigan 48667

Mr. Geoffrey Wertz
Research and Test Reactors Licensing Branch
Division of Policy and Rulemaking
Office of Nuclear Reactor Regulation

Subject: Dow Chemical Company- Response to the Request for Additional Information for the renewed license of the TRIGA research reactor. License No. R-108; Docket No. 50-264

Enclosed is the Safety Analysis report for the Dow TRIGA research reactor request to license power at 300 kW and the response to the request for additional information. In addition, I am requesting a 90 day extension for the following questions.

RAI 7, 8,14,15,16,17,18,19,24,26,28,29,52,53,54,55,56,57.

Should you have any questions or need additional information, please contact the undersigned at 989-638-6932.

I declare under penalty of perjury that the foregoing is true and correct.

Executed on Feb. 11, 2011

Melinda Krahenbuhl, Ph.D.
Director
Dow TRIGA Research Reactor

Subscribed and sworn to before me this 11 day of February, 2011

Stacy L. McKeon
Notary Public
_____ County, Michigan
My Commission Expires:

_____

Stacy L. McKeon
NOTARY PUBLIC, BAY COUNTY, MICHIGAN
ACTING IN MIDLAND COUNTY, MICHIGAN
MY COMMISSION EXPIRES JUNE 28, 2011

cc: Sandeep S. Dhingra, R&D Director - Analytical Sciences

A020
NRR

Response to the request for additional information
The Dow Chemical Company
February 2011

1. NUREG–1537, Part 1, Section 1.2, "Summary and Conclusions on Principal Safety Considerations" requests the applicant to provide a summary of the principal safety considerations for its reactor. The DTRR safety analysis report (DTRR SAR) includes Section A.2 with the same title, but the contents only briefly discuss operational safety based on "TRIGA reactor fuel, current instrumentation, and operation controls." Please provide a summary of the principal safety considerations applicable to DTRR (control rods and their active/passive operation, the reactor tank structure, site selection, ventilation systems, etc.).

DTRR response:
The Safety Analysis report demonstrates and documents the systems and properties that provide for the continued safe operation of the DTRR. The features include passively safe control rods that utilize electromagnets for withdraw, UZrH mix fuel with a negative temperature coefficient, natural convective heat transfer for cooling, adequate and well trained staff. In addition the DTRR is equipped with heat exchangers rated well above licensed power. The maximum hypothetical accident does not lead to public exposure above the regulatory limits. Additionally, the DTRR has established emergency and security plans integrated with Michigan operations site. Audits and inspections performed regularly have not identified on-going deficiencies. The equipment, surveillances and instrumentation meet or exceed requirements established in the Code of Federal Regulations, ANSI and ANS standards and guidelines. The reactor components, tank, fuel, control rods do not show signs of wear and continue to perform in the intended function.

2. NUREG–1537, Part 1, Section 1.3, "General Description of the Facility" requests the applicant to provide a brief description of facility features providing a general arrangement of the major structures and equipment, including drawings. The DTRR SAR does not provide sufficient information. Please provide drawings that illustrate the major components and rooms as described in the DTRR SAR (e.g. reactor bay, console, laboratories, vaults, monitoring stations, ventilation components and vents, etc.).

DTRR response:
Figure 1 and Figure 2 illustrate the major structures and equipment for R-108. Figure 1 specifically indicates the location of the licensed area within building 1602. The licensed area is highlighted. Figure 2 identifies the major structures located in the reactor room (51-A), control room (51), associated labs (51-B and 52), and water treatment room (51-AA). The licensed area is equipped with 4 fume hoods as indicated in Figure 2. The continuous air monitor is located on the bench top on the south wall of the reactor room. The reactor room has three large storage wells that are not in use. The reactor room is also equipped with 105 small storage wells used for gamma sources, if necessary. In addition, an area monitor is installed over the door leading from the reactor room to the control room. The ventilation inlet is on the north side of the reactor. The exhaust from the reactor room vents out on the east side of the building as noted on Figure 1.

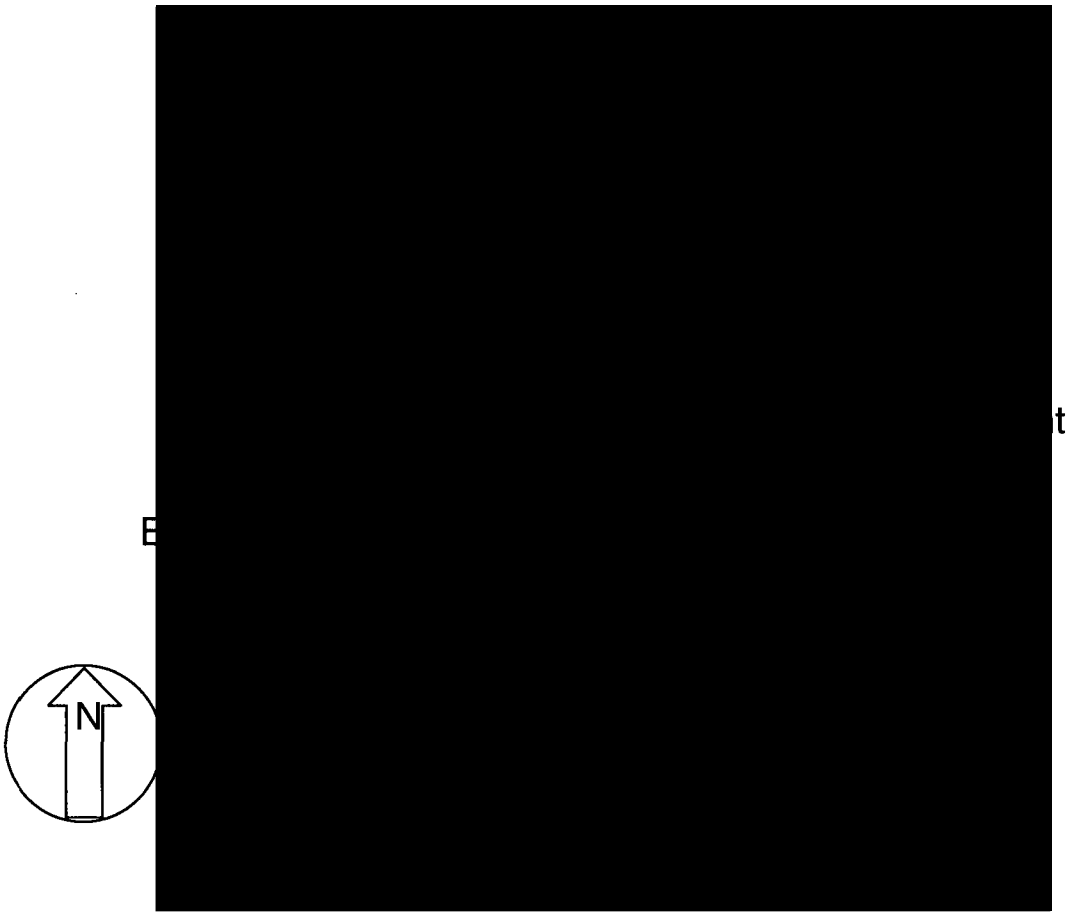
t
E
N

[redacted]

4. NUREG–1537, Part 1, Section 1.8, "Facility Modifications and History" requests the applicant to provide descriptions of any changes that have been made, including changes made under Title 10 of the *Code of Federal Regulations* (10 CFR) Section 50.59. DTRR SAR, Section A.8, provides information about three changes without indicating the means used to implement them. Please provide a more detailed list of significant changes to the facility accomplished under 10 CFR Section 50.59.

DTRR response:
As required all changes at the DTRR are reviewed using Title 10 of the *Code of Federal Regulations* (10 CFR) Section 50.59. Those items which meet the criterion outlined in the regulation are forwarded to the NRC for approval.

A.8.1. Pneumatic Transport system terminal
An automatic feed mechanism and on-line gamma spectroscopy detector was installed in 1982. The modification under went a 10 CFR 50.59 review prior to installation. The modification was deemed as an improvement in capability and approved by the Reactor Operations Committee. Subsequent NRC inspections reviewed the 10 CFR 50.59 documentation, installation and use. These inspections did not identify deficiencies in the review, installation and use of the pneumatic transport system.

A.8.2 Control System Console.
The control system was modified to include a microprocessor based instrumentation and control system. A safety analysis report was submitted to the Nuclear Regulatory Commission requesting an amendment. The NRC approved the request and amended the license Dec. 13, 1990. Subsequent NRC inspections reviewed the 10 CFR 50.59 documentation, installation and use. These inspections did not identify deficiencies in the review, installation and use of the control system.

A.8.3 Heat Exchange System. A closed loop heat exchange system was installed in 2004 -2005. The modification under went a 10 CFR 50.59 review prior to installation. The modification was deemed as an improvement in capability and approved by the Reactor Operations Committee. Subsequent NRC inspections reviewed the 10 CFR 50.59 documentation, installation and use. These inspections did not identify deficiencies in the review, installation and use of the heat exchange system.

5. NUREG–1537, Part 1, Section 2.2, "Nearby Industrial, Transportation, and Military Facilities" requests the applicant to provide a discussion of the potential for accidents in the vicinity of its site from present and potential industrial operations. The discussion of this topic in DTRR SAR, Section B.2.3 is limited to descriptions of site security and does not discuss potential on-site contributors such as chemical accidents arising from nearby Dow facilities. Please provide a description of postulated accidents attributable to nearby Dow facilities, how DTRR staff would become aware of such accidents and how they would affect operation of DTRR.

DTRR response:
The facility is integrated into the Dow Chemical Michigan Operations research and manufacturing plant site. As such it has an integrated safety and security system above those required for the manufacturing facilities. Some of the Emergency procedures for the Michigan Operations site are

[redacted]

6. NUREG–1537, Part 1, Section 2.3, "Meteorology" requests the applicant to indicate how the local (site) meteorology supports the dispersion calculations of airborne releases under normal and accident conditions. Please provide a description of the dispersion model based on this meteorological data.

DTRR response:
The dose calculations are completed using wind speed, number of hours and wind direction determined from the meteorological data and using Regulatory Guide 1.111, Nuclear Regulatory Commission, 1977 and CAP88-PC version 2.1 code (U.S. Environmental Protection Agency, 2000). However, the closest fenceline to the DTRR is not in the prevailing wind direction, therefore public dose estimates used in the Safety Analysis are made using meteorological conditions that disperse to the closest public area. The concentration of a radionuclide at a given distance from a point source is calculated by (Regulatory Guide 1.111, Nuclear Regulatory Commission, 1977):

$$\chi_{\sec avg} = \sum_j \frac{n_{ij}}{N} \frac{2.032\,Q}{u_j \Sigma_z x} e^{-\frac{h^2}{2\sigma_z^2}}$$

where,

$\chi_{sec\ avg}$ = Concentration of radionuclide in the air, averaged over a 22.5 degree sector (Ci/m$^3$)

$n_{ij}$ = Number of hours that wind is blowing in direction i (towards receptor) in wind speed group j [From wind speed and direction data]

N = Total number of hours of wind speed and direction data

Q = Release rate of radionuclide (Ci/sec) [calculated to be 3.17e-9 Ci/sec]

$u_j$ = Average wind speed in wind speed group j (m/sec) [From wind speed and direction data]

$\sigma_z$ = Vertical diffusion coefficient (m)[From Regulatory Guide 1.111 (U.S. Nuclear Regulatory Commission, 1977), dependent on stability class]

$S_z$ = Vertical plume spread with a volumetric correction for a release within the building wake cavity [equivalent to $\sigma_z$ to conservatively not take credit for building wake effects]

x = Distance from release point to receptor (m) [23 m]

h = Release height (m) [Assumed to be a ground release (h=0) because vent height is less than two times the building height and the exit velocity is less than 5 times the horizontal wind velocity]

9. NUREG–1537, Part 1, Section 4.2.2, "Control Rods" requests the applicant to provide a description of the control rod position indication system. DTRR SAR, Chapter D, does not provide this information. Please provide a description of the control rod position indication system.

DTRR response:
Reference: "Operation and maintenance manual microprocessor based instrumentation and control for the ICI TRACERCO TRIGA reactor", General Atomics 1990.
The control rod position indication system has not been modified since installation by General Atomics. A control rod is driven by a two-phase motor that drives a pinion gear through a reduction gear box and a 10 turn potentiometer. The relative position of the potentiometer is indicative of the rod position. The circuit has three microswitches which provide limit contacts for the

motor and control rod drives. The control rod position is indicated at the console. The motor circuit, rod drive and position digital input circuit are in Figure 3.

10. NUREG–1537, Part 1, Section 4.2.4, "Neutron Source" requests the applicant to provide a description of the startup source including limitations on maximum power level with the source in place and surveillance requirements to assure source integrity. DTRR SAR, Chapter D, only discusses the source type and location. Please provide a discussion of the limitations such as the maximum power level of the reactor with the source in place and surveillance requirements to ensure source integrity.

DTRR response:
Currently, the reactor is operated with the start-up source in core and will continue to operate with the source in core. The start-up source is a 2 Ci AmBe source. The loss of integrity of the source cladding would be indicated by increase count rate from the Geiger counter installed in the water treatment line, and monthly pool water sampling.

11. NUREG–1537, Part 1, Section 4.2.5, "Core Support Structure" requests the applicant to provide design information pertaining to the core support structure. DTRR SAR, Chapter D, does not provide sufficient information. Please provide figures depicting the upper and lower core plates and provide the dimensions and locations of all penetrations that allow coolant to flow through them.

DTRR response:
Two aluminum grid plates fix the position of fuel elements, dummy elements and neutron source. Figure 4 is the schematic drawing of the upper grid plate with the position of the control rods, pneumatic transfer location and source indicated. The upper plate is ¾ inch aluminum and 1.5 inch diameter holes to position the fuel, dummy elements, control rods, etc. The bottom plate is ¾ inch aluminum and has holes to receive the end pins of the fuel and dummy elements. Thirty-six holes for the natural convection cooling are found on the lower grid plate. The water passes through the upper grid plate by means of the gap between the triflute section of the fuel and the upper grid plate. The penetrations on the lower grid plate are in concentric rings with 7, 12, and 17 holes, respectively. Figure 5 is a photograph of the lower grid plate. This photograph substantiates the as built drawings given by General Atomics, and previous Safety Analysis Reports submitted by The Dow Chemical Company. Figure 5 is a photograph of the lower grid plate.

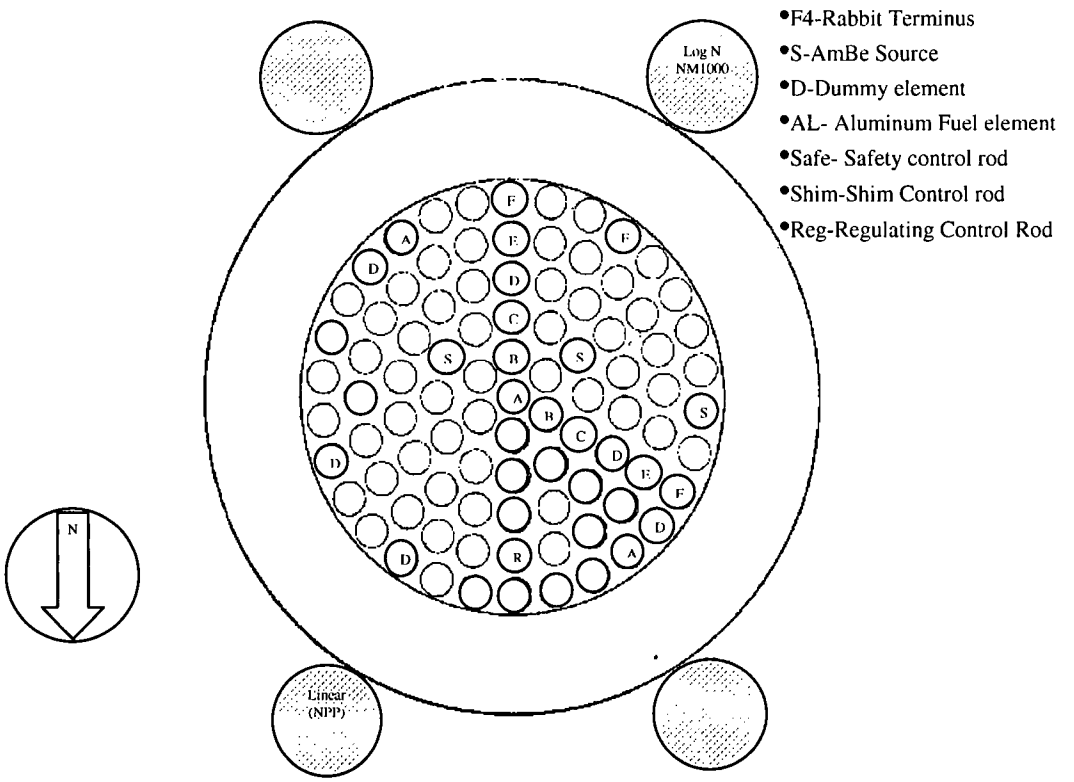


Figure 4. Upper grid

Figure 5. Lower grid plate.

12. NUREG–1537, Part 1, Section 4.3, "Reactor Tank or Pool" requests the applicant to provide a description of the reactor tank and associated components including how those components will perform their intended functions to prevent possible leakage associated with chemical interactions, penetration and weld failures. The DTRR SAR, Chapter D, does not provide sufficient information. Please provide a discussion of preventative measures employed to monitor and maintain the integrity of the reactor tank from possible leakage.

DTRR response:
Tank integrity is maintained through minimization of corrosion. The tank is inspected prior to operation. The water quality is monitored and controlled. The pH is monitored monthly and conductivity of the pool water is checked prior to operation. The pool water is filtered and deionized. Deionized make-up water is added as needed based on reactor usage and tracked daily. Water makeup is between 10 and 20 gallons per week and has not changed since installation. The tank is equipped with a water level visual and audible alarm. When the building is unoccupied, The Dow Chemical Company Scouts come through the building periodically. In addition, the DTRR is an open pool reactor the walls and bottom of the tank are visible. There is no current indication of corrosion or wear on the interior of the tank.

13. NUREG–1537, Part 1, Section 4.4, "Biological Shield" requests the applicant to provide a description of the reactor's biological shield and how it assures acceptable control of personnel exposure. DTRR SAR did not provide this information.

DTRR response:
The reactor biological shield is the water volume above the core. The tank is equipped with a water level sensor with both a visual and an audible alarm. TS 3.4 requires that "The water shall cover the core of the reactor to a minimum depth of 15 feet during operation of the reactor."
Typical dose rates at 300 kW based on position are:

| | |
|---|---|
| One foot above the water | 18-30 mR/hr |
| At the handrail, edge of tank | 3-6 mR/hr |
| Outside the handrail | 0.15-3 mR/hr |

Radiation dose rates are low enough for personnel to work in close proximity to the tank while the reactor is operating at full power. The principles of ALARA are practiced and applied to minimize the exposure of individuals.
Radiation exposure to personnel at the facility is consistently low, and no employee has received a whole body dose over 100 mrem/quarter.

20. NUREG–1537, Part 1, Section 5.2, "Primary Coolant System" requests the applicant to provide information regarding the coolant system control and safety instrumentation, including the location and functions of sensors and instruments. The SCRAM or interlock functions that prevent exceeding the SLs should be shown and discussed. DTRR SAR, Section E.3, does not include this information. Please provide a description of the primary coolant system control and safety instrumentation, including the location and function of sensors and instruments. Please include in this description a discussion of the SCRAM or interlock functions that prevent exceeding the SLs.

DTRR response:
There are no SCRAMS or INTERLOCKS attached to the coolant system. There is a visual and an audible alarm on the water level in pool. In addition bulk pool water temperature is monitored and has a visible and audible alarm.

21. NUREG–1537, Part 1, Section 5.2, "Primary Coolant System" requests the applicant to include in this section tables of allowable ranges of operating parameters and specifications for the primary coolant system and its components. The DTRR SAR does not provide sufficient information on this subject. Please describe what primary coolant parameters are monitored and provide information regarding appropriate ranges of coolant conditions, levels, and temperatures.

DTRR response:
The following parameters are monitored in the primary coolant, i.e. pool water.

Pool water temperature - less than 60 °C
Pool water height above core - 15 feet above the core
Pool water conductivity - less than 5μmhos
Radioactivity in the water - less than 0.1μCi/ml

22. NUREG–1537, Part 1, Section 5.2, "Primary Coolant System" requests the applicant to provide a discussion of primary coolant radioactivity concentration limits, including isotopes of interest. It is not clear in DTRR SAR, Section E.2, how the Geiger tube is able to measure the isotopes of interest in the primary water. Please indicate how the concentrations of these radioisotopes are obtained and the basis for the limits stated in DTRR TS 3.4.

DTRR response:
As stated in TS 3.4 the Geiger counter is used to monitor "the radioactivity in the pool water" and "serves to provide early detection of possible cladding failures". No specific isotopes can be identified by sole use of the Geiger counter. In addition the ARM and CAM systems would also have increased count rates to indicate cladding failure. Water samples are taken monthly for analysis and submitted to Radiation Safety. If the total activity in the water exceeds the limit of 0.1μCi/ml, a water sample would be taken and submitted for analysis to identify the isotope in the water. Isotopes expected include Xenon, Krypton and Iodine isotopes. Hawley and Kathren NUREG/CR-2387, PNL-4028, "Credible Accident analysis for the TRIGA and TRIGA-Fueled reactors" calculated 4200 Ci gaseous fission product inventory in the element with the highest power density for a core with 50 elements operating at 1 megawatt for 365 days. If a fraction (.03%) of this inventory of noble gases and halogens were released into the 3700 gallon of pool water the concentration would exceed the limit established.
Hawley S.C.and Kathren R.L. NUREG/CR-2387, PNL-4028, "Credible Accident analysis for the TRIGA and TRIGA-Fueled reactor
Foushee, F.C., "Release of rare gas fission products from U-ZrH fuel material", Gulf General Atomic Incorporated report GA-8597, San Diego CA March 1968.
Foushee F.C. and Peters R.H.," Summary of TRIGA fuel fission product release Experiments." Gulf EES-A10801.

23. NUREG–1537, Part 1, Section 5.3, "Secondary Coolant System" requests the applicant to provide a description of the secondary coolant system, including schematics and flow diagrams for the secondary coolant system.

    23.1 DTRR SAR, Section E.1, states that "the heat rejection systems can be operated independently or in tandem." DTRR SAR, Section E.1, Figure 6, Reactor Coolant System, shows no valve arrangement that

accomplishes these functions. Please provide schematics and flow diagrams for the secondary system, including valves, which show how the secondary coolant system can be operated independently or in tandem.

23.2 DTRR SAR, Section E.1, does not provide sufficient information describing the secondary system. Please provide a more detailed description of the secondary coolant system and describe how primary to secondary leakage would be detected.

DTRR response:

23.2 Figure 6 is of the heat exchange system installed at the DTRR. The reactor is cooled by natural convection. Thus, the system is not required for operation.

23.3 Makeup water is added directly to the pool and monitored. Pressure in pool water lines and coolant lines are monitored. The pool water line is kept at a lower pressure than the coolant lines. Huron water leaking into the pool would be indicated by changes in conductivity, pH, monthly water sampling and the Geiger tube installed on the water treatment line. Leaks would also be indicated by changes in pressure monitored on the system. The secondary heat exchange system is rated at 1 megawatt. The chiller is a located on the east side of building 1602. This system can be operated manually or set to automatically start when the pool water reaches 27 °C. The system shuts down at 22 °C. The system is dedicated to the reactor. The uncertainty in the measurement is 2 °C.

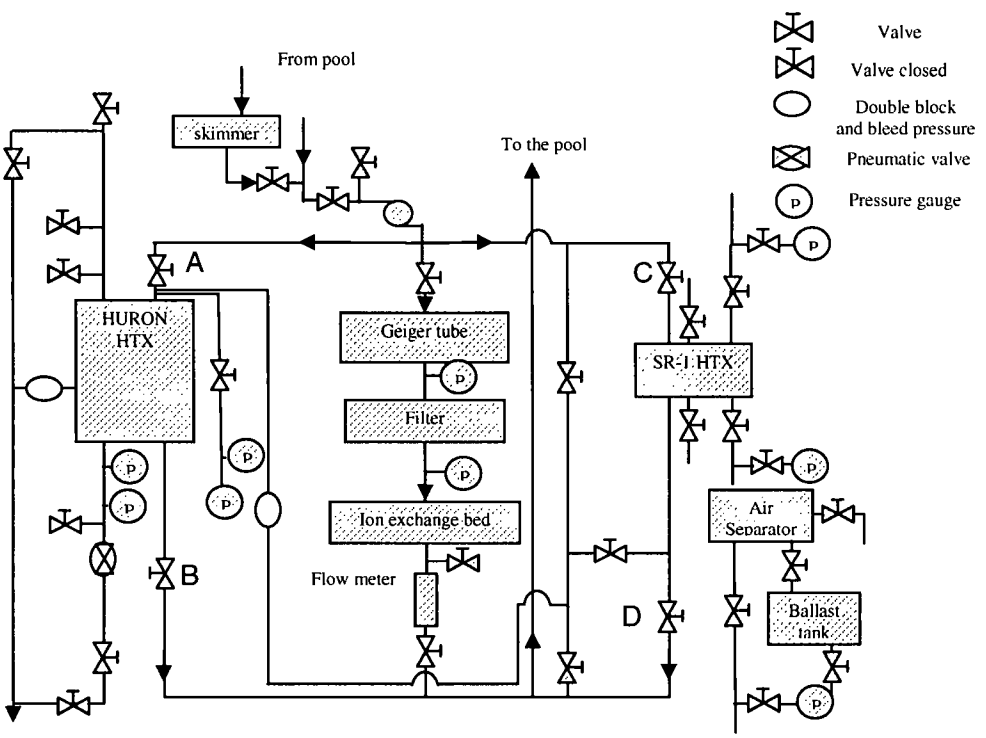


Figure 6. Block Diagram Cooling System
A,B,C, and D are valves that can be used for isolation

25. NUREG–1537, Part 1, Section 5.4, "Primary Coolant Cleanup System" requests the applicant to provide a summary of methods for predicting and limiting exposure of personnel in the event of an inadvertent release of radioactivity into the primary coolant system and deposited in filters and demineralizer columns. DTRR SAR, Section E.4, does not provide this information. Please provide a summary showing how such a condition would be recognized and methods that would be employed to limit personnel exposures.

DTRR response:
Inadvertent releases of radioactivity from samples directly into the pool are prevented by using only locations designed for sample irradiation, rotary specimen rack, F4 position of the core, and the vertical beam tube. Each of these irradiation ports is dry. The vertical beam tube is filled with water when not in use. Additionally all samples are loaded in secondary containers. However, in the unlikely event of a sample breaking in the pool, the Geiger tube installed on the primary water line provides information to the personnel prior to entering the water treatment room. Additional information is available from the area radiation monitor and continuous air monitor. Both monitors are located in the reactor room with read outs available in the control room.

27. NUREG–1537, Part 1, Chapter 6, "Engineered Safety Features (ESF)" requests the applicant to provide a description of any systems with active or passive features designed to mitigate the consequences of accidents in order to keep radiological exposures to the public, the facility staff, and the environment within regulatory limits. DTRR SAR, Section F.1, states that the DTRR uses a "confinement type engineered safety system" but it is not clear if it is considered an ESF. Please indicate if the DTRR confinement system should be considered an ESF.

DTRR response:
The DTRR does not have any engineered safety features.

30. NUREG–1537, Part 1, Section 7.3, "Reactor Control Systems (RCS)" requests the applicant to provide information regarding the functions of the RCS. DTRR SAR, Chapter G, does not provide sufficient information.

    30.1 Please describe the ranges of the reactor control instrumentation and justify the adequacy of the ranges to monitor power up to the requested power level.

DTRR response:
General Atomics provided both the NM1000, and NPP1000 used as power

monitors for the DTRR. The combined range of the two instruments covers from $3 \times 10^{-4}$ up to $3 \times 10^{5}$ Watts. Figure 7 is the range of the two instruments.

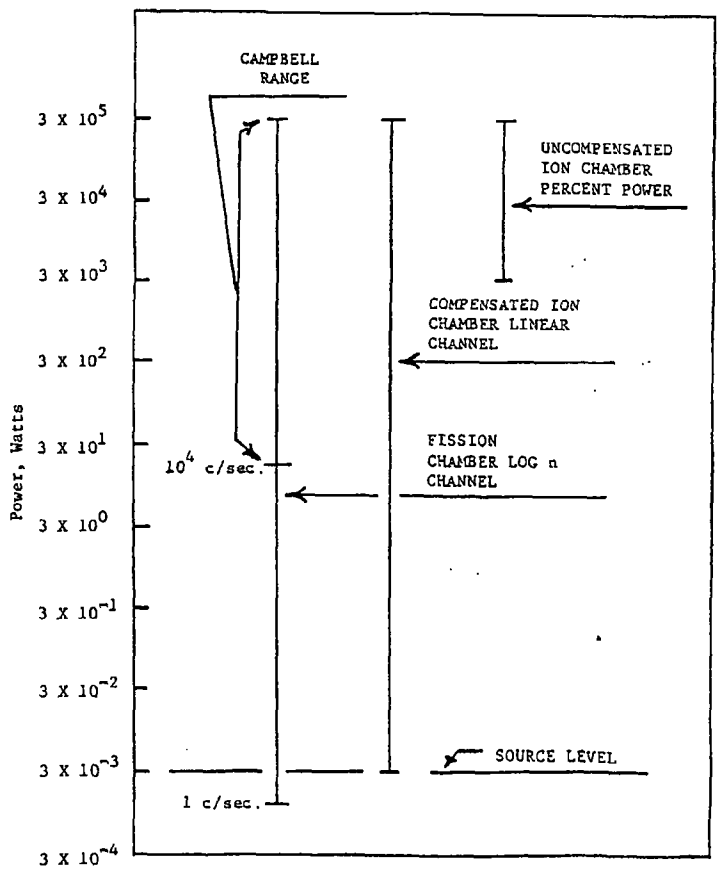


Figure 7. Detector ranges

31. NUREG–1537, Part 1, Section 7.4, "Reactor Protection Systems" requests the applicant to provide a description of the SCRAM circuits and functions, neutron flux monitoring channels, and log power channels. DTRR SAR, Chapter G, does not provide sufficient information. Please provide a description of the SCRAM circuits and functions, indicating which channels are analog, the neutron flux monitoring channels and the log power channels.

DTRR response:
SCRAMS are initiated when the setpoints are exceeded for the channel. The electromagnets lose current and drop the control rods in by gravity. Each sensor that can trigger a SCRAM is independent. The SCRAM logic is described in "Operation and maintenance manual microprocessor based instrumentation and control for the ICI TRACERCO TRIGA reactor", General Atomics 1990. The instrumentation and control system was designed and installed by General Atomics. This system complies with the guidance given in ANS/ANSI 15.15-1978. Criteria for the reactor safety systems of research reactors." Figure 8 is the SCRAM logic for the DTRR.

[redacted]

32. NUREG–1537, Part 1, Section 7.6, "Control Console and Display Instruments" requests the applicant to provide a complete description of all console functions, as they relate to the proper operation and shutdown of the reactor. DTRR SAR, Chapter G, does not provide sufficient information.

32.1. Please describe the console controls and operator interfaces.

32.2. Please describe the location of the instruments and how the locations relate to the reactor and other system controls in the main console and auxiliary control room racks.

32.3 Please provide drawings or photographs showing the arrangement of the display instruments and console control equipment.

DTRR response:
Reference: "Operation and maintenance manual microprocessor based instrumentation and control for the ICI TRACERCO TRIGA reactor", General Atomics 1990.
32.1 The instrumentation and control system was designed and installed by General Atomics. This system complies with the guidance given in ANS/ANSI 15.15-1978. Criteria for the reactor safety systems of research reactors". The console has not been modified to operate outside the scope of the original installation.
The operator interfaces with the console through two mechanisms.

a. computer
b. control interface

The computer is used to "log" on to the system. Other functions available from the computer at the console are history, hours of operation and integrated power output. The history function stores the last 20 minutes of operation. The control rods cannot be manipulated through the computer interface. The second mechanism is the control interface; the operator uses a key to turn the console "on". Control rod movement is accomplished through depressing the up or down buttons on the console. The operator can also change the mode by a mechanical button located on the console. The three modes are prestart, manual and auto. The prestart mode sends test signals through the system checking scrams and interlocks. In the manual mode, the operator has control of the control rod. The auto mode can be used to keep the reactor at a steady power level. In auto mode there is a feed back mechanism connected to the regulating (reg) rod and the power demand switch. The reg rod will be moved to maintain the power as dialed in by the operator. The auto function does not prohibit the operator from moving the all three control rods using the up or down buttons.

32.2 Instruments are installed in the reactor room to acquire the data required for the safe operation of the reactor. The displays for the instruments are at the

console. The auxiliary racks in the control room store additional instrumentation that is not used for regulatory compliance with the exception of the area radiation monitor read out, and the pool water level alarm indicator.

32.3 Figure 9 is a block diagram of the console.

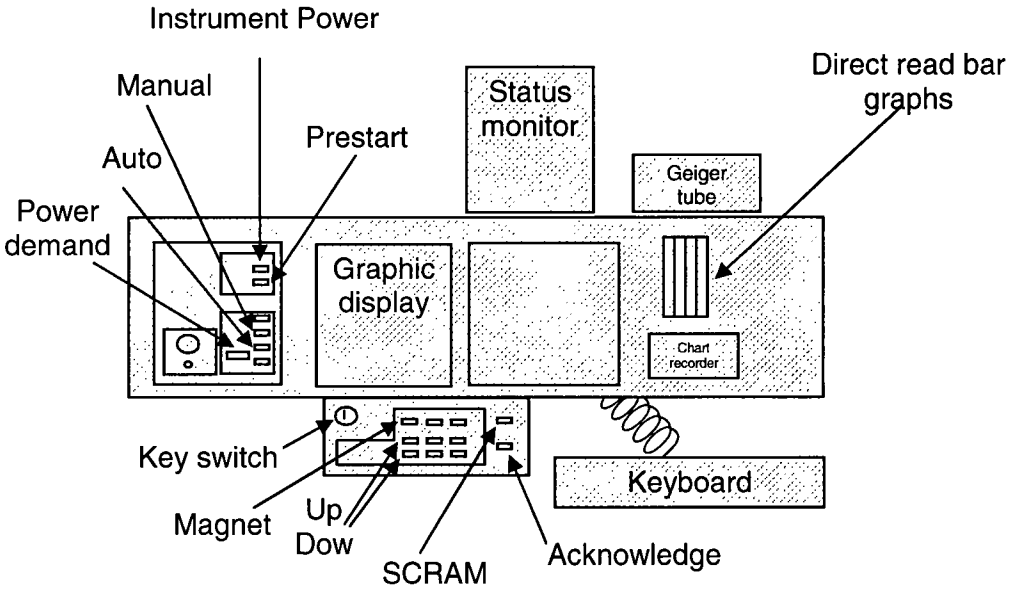


Figure 9. Block Diagram of the console

33. NUREG–1537, Part 1, Section 8.1, "Normal Electrical Power" requests the applicant to provide schematic diagrams showing the basic distribution systems and circuits of the normal electrical power distribution system. DTRR SAR, Chapter H, does not provide sufficient information. Please provide schematic diagrams showing the basic distribution systems and circuits of the normal electrical power distribution system.

DTRR response:
The normal electrical distribution system for building 1602 is included as Figure 10. Panels which feed rooms 51, 52 are M15 - LP "D" and LP "B". The 1 megawatt chiller dedicated to the reactor is circuit M10.

[redacted]

34. NUREG–1537, Part 1, Section 9.1, "Heating, Ventilation and Air Conditioning System" requests the applicant to provide a description of the heating, ventilation and air conditioning system (HVAC) and any manual or automatic functions. There is a brief description in DTRR SAR I.1 regarding this function with no schematics or illustrations. Please provide a more detailed description of the HVAC system and system functions and provide schematics of the HVAC system.

DTRR response:

The HVAC for DTRR is Figure 11. The inlet to the reactor room is located to the north side of the reactor room. The outlet is located on the east wall of the building. The ventilation system inlet is equipped with a set of louvers that can be shut from the control room by the operator if necessary to isolate the reactor room. The exhaust is also equipped with a set of louvers that can be shut manually from the exterior of the building. The fume hood exhausts are separate from the HVAC system.

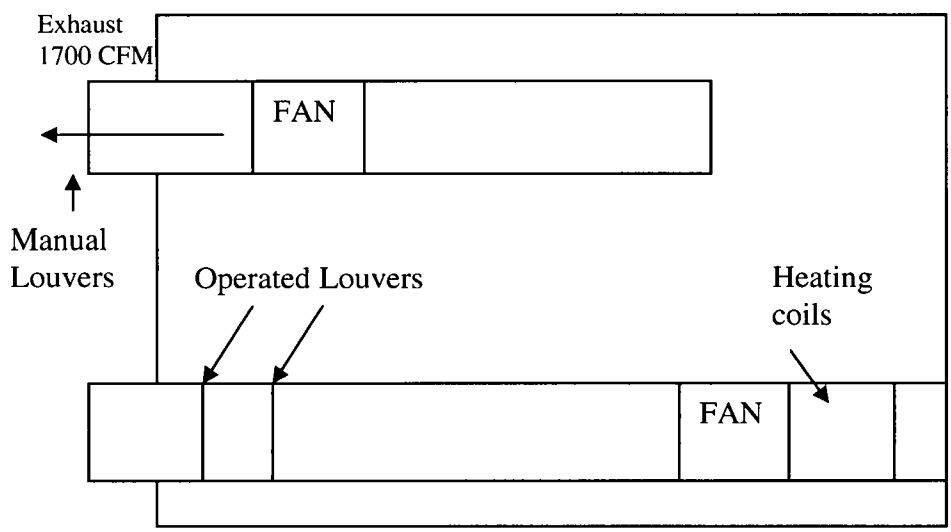


Figure 11. HVAC for the DTRR reactor room.

35. NUREG–1537, Part 1, Section 9.2, "Handling and Storage of Reactor Fuel" requests the applicant to provide an analysis or a reference to an analysis that shows that subcriticality is assured under all conditions of fuel handling and storage. The DTRR SAR does not provide this information. Please provide an analysis that shows that K eff is maintained below 0.90 for all storage configurations and that dose limits are met.

DTRR response:

The DTRR does not currently store fuel outside of the core. For fuel inspection and control rod inspection the core is made subcritical by removing two fuel

elements from the B ring and placing them in the in-pool storage racks. Subcriticality of the core is verified prior to fuel and control rod inspection. The racks have 10 position 2 inches separating the axial centerline of adjacent elements. As per the Letter dated 3/1/1966 by Foushee, the $K_{eff}$ for one array is 0.5096 and for two arrays back to back $K_{eff}$ 0.7227. These $K_{eff}$ were calculated assuming the U-235 load in the element is [redacted]. The dose limits are met by storing the fuel in the pool with a required water level 15 feet above the core.

36. NUREG–1537, Part 1, Section 9.2 requests the applicant to provide a discussion of the handling and storage of new, spent, and failed fuel elements.

    36.1 DTRR SAR, Section I.2, does not discuss the tools used to insert or remove fuel from the core, as well as the physical and administrative methods specified to control their use. Please provide this information.

    36.2 DTRR SAR, Section I.2, does not discuss whether Technical Specifications are required for or are applicable to the handling and storage of spent or damaged fuel. Please provide this information.

DTRR response:
36.1. Under the Technical specifications, all movement of fissile material is performed as a special experiment and reviewed by the Reactor Operations committee. DTRR procedure 4.3 describes and defines fuel movement, including requirements for sub criticality and number of operators present. Fuel is moved with the use of a General Atomics fuel handling tool. The fuel handling tool is secured when not in use.

36.2. Damaged fuel will be removed from the core and stored in-pool. The DTRR uses a General Atomics fuel handling tool if possible. Other tools are available or can be fabricated if necessary for the removal of individual damaged fuel. A definition for damaged fuel has been added to the Technical Specifications.

37. NUREG–1537, Part 1, Section 9.3, "Fire Protection Systems and Programs" requests the applicant to provide a description of fire prevention and protection processes in use at the site. DTRR SAR, Section I.3, does not provide sufficient information. Please provide a description of the DTRR systems and processes designed to protect the facility from damage by fire. Please include descriptions of the protective equipment available and the fire barriers that could affect a safe reactor shutdown or the release of radioactive material.

DTRR response:
Building 1602 is equipped with smoke detectors and fire alarms that are monitored by Dow dispatch. An alarm from the building initiates a response from the on-site

fire department. The on-site responders can call Midland City for back-up, if necessary. Fire extinguishers are located in rooms 52, 51-B, 51 and 51-A. In the event of a fire in the licensed area, the staff can use the fire extinguishers and initiate an emergency response. The reactor is secured for all fire events within the building. The core and control rods are protected from fire damage by the water column. In the event of damage to the control rod drive mechanisms, or reactor console, control rods remain fully inserted due to gravity. Loss of electricity to the electromagnets also results in the control rods being fully inserted. There are no fire activated barriers in place that would prevent the safe shutdown of the reactor. Sample inventory and flammable materials are kept to a minimum to minimize the potential for fire.

38. NUREG–1537, Part 1, Section 9.7, "Other Auxiliary Systems" requests the applicant to provide a description of other auxiliary systems in use at the site. DTRR SAR, Section I.7 does not provide sufficient information. Please provide a complete description of the location of the hoods, the relation of their exhaust piping to the HVAC system, the size of the piping used, and the exhaust height of their effluent relative to nearby buildings.

DTRR response:
Four fume hoods are located in rooms 51-B and 52. The specifications for the fume hoods are in Figure 10. Three of the fume hoods are designated as radioactive hoods. Each fume hood exhaust is equipped with HEPA filters on 14 inch piping. Flow rates for the fume hoods are monitored. In addition a vent is located at the rabbit terminus in room 51-B. Samples are loaded and unloaded from secondary containers in the fume hoods. The height of the effluent is 8 ft above the roof. These exhaust vents are above air intakes for the surrounding buildings.

39. NUREG–1537, Part 1, Section 10.2, "Experimental Facilities" requests the applicant to provide a description of specifications and important design and operating parameters for the experimental facilities. DTRR SAR, Section J.2.2 does not provide sufficient information regarding the pneumatic transfer system. Please provide a more detailed description of the pneumatic transfer system and how its use is controlled by reactor operators.

DTRR response:
The pneumatic transfer terminus is located in 51B and the port is the F-4 position of the reactor. The reactor operator is in control of all experiments. Experiments begin with verbal affirmation from the reactor operator to the experimenter. Communication between the reactor operator and the experimenter is continuous through out the experiment. The reactor operator has the authority to terminate an experiment. The pneumatic transfer system is operated under procedure 4.6.2b. The operation of pneumatic transfer system for the pseudo cycling is from a

computer interface that does not interact with the console. Terminals for operating the pseudo cycling system are located in the control room, and lab 52.

40. NUREG–1537, Part 1, Section 10.2, "Experimental Facilities" requests the applicant to provide information regarding the potential for any experimental systems to affect the functioning of the reactor protection system. DTRR SAR, Section J.2, does not provide this information. Please provide a discussion of the experiment control systems and whether they are separate from the reactor control and safety systems. Please discuss whether operation or malfunction of the experimental systems could affect the proper functioning of the reactor control and safety systems.

DTRR response:
The experiment control system for the pneumatic transfer system is separate from the reactor control and safety systems. Operation and malfunction of the pneumatic transfer system does not affect the proper functioning of the reactor control or safety systems.

41. NUREG–1537, Part 1, Section 10.2, "Experimental Facilities" requests the applicant to provide a description of the radiological considerations associated with the design and the use of the experimental facilities, generation of radioactive gases, release of fission products or other radioactive contaminants, and exposure of personnel to neutron and gamma beams. DTRR SAR, Section J.2, does not provide this information. Please provide this information for operation at the requested power level.

DTRR response:
All routine experiments are reviewed prior to irradiation. Dose rate on removal is estimated using power, irradiation time, decay time and composition of the samples prior to irradiation. These estimates are noted on the TRIGA activation request form. Dose rate to the experimenter is controlled using ALARA. Samples are unloaded from the rotary specimen rack using a General Atomics grapple system. Samples may be returned to the rotary specimen rack or a lead cave in the reactor room if the dose rate exceeds expectation. Samples are unloaded from the secondary capsules using long handled tongs inside of the fume hood which is vented through HEPA filter. Operation of the pneumatic system is not allowed when individuals are on the roof. Personnel are not typically in the reactor room during operation and therefore not as risk for direct exposure to neutron beams or gamma-rays. Bends are located in both the pneumatic system and rotary specimen rack system to minimize dose rates in the reactor room. The ARM, CAM and Geiger tube continuously provide an indication of the condition in the reactor room. Contamination is controlled by the use gloves and lab coats. Monthly area surveys including wipe test are used in monitoring and controlling contamination. Areas that contain or are used to store radioactive material are clearly marked.
From Attachment 1 of the Response to the Request for additional information dated Sept 24, 2010. Ar-41 is produced when Ar-40 in air gaps in the reactor (empty

sample tubes and rabbit terminus) absorbs a neutron and is activated to Ar-41. The rabbit system discharges into a hood exhaust duct which flows at 1100 CFM (34,000 L/min). The volume of Rabbit Terminus is 301.5 cc (1.25" dia. x 15" long). The weight of Ar in this volume at 1 atm. is 3.64 mg (0.001293 g/cm3 x 0.934% x 301.5 cc). Per Erdtmann NAA tables, production of 41-Ar at 250Kw is 250 dpm/microgram per irradiation minute.

3.64 mg x 252 dpm/ug / 37,000 dps per microcurie = 0.4 uCi/min

The reactor is operated approximately 15 minutes per day with the rabbit system in operation, so total generation rate of Ar-41 is approximately 6 uCi/day.

The rabbit system discharges into a hood exhaust duct which flows at 1100 CFM (34,000 L/min). Again, assuming a 95% usage fraction of the hood, the daily exhaust rate of the hood is:

34,000 L/min x 60 min/hr x 24 hr/day x 0.95 = 4.65 x $10^7$ L/day

Using these numbers, the daily average concentration of Ar-41 being exhausted from the 1602 Building is 1.29 x $10^{-10}$ uCi/mL. The 10 CFR 20, Appendix B allowable effluent release concentration of Ar-41 through the air pathway is $1 \times 10^{-8}$ uCi/ml. The Ar-41 releases from the reactor are 1.3% of the allowable release concentration, which corresponds to a dose of approximately 0.65 mrem/yr, assuming somebody was continuously present at the location of release. This is well below regulatory limits for releases of radioactive material in 10 CFR Part 20 and the ALARA goal of 10 mrem/yr. Therefore, transport calculations will not be performed for the Ar-41 release.

If this material was released directly into the reactor room, it would be dispersed throughout the reactor room and an Ar-41 concentration of 4.62 x $10^{-8}$ uCi/ml could be generated. If a worker was continuously present in an environment of this concentration, during reactor operations, their exposure would only be 2.4 mrem/yr.

42. NUREG 1537, Section 10.3 "Experimental Review" states that the documentation of experiment review methodology should describe how 10 CFR Section 50.59 will be used to review all new experiments and changes to currently authorized experiments not described in a reactor's SAR. DTRR SAR, Section J.3.3.2 does not provide this information. Please provide a discussion regarding experiment review methodology.

DTRR response:
The DTRR is used for Neutron Activation. Experiments will continue to be reviewed as described in the Safety Analysis report section J.3 and Technical Specifications 6.2.2, using the Technical Specifications listed in TS 3.7. New experiments fixed or moveable will be reviewed using 10 CFR 50.59(a)(6).

43. NUREG–1537, Part 1, Section 11.1.1.1, "Airborne Radiation Sources" requests the applicant to provide a description of airborne radiation sources. DTRR SAR, Section K, does not provide sufficient information. Please provide a discussion of the generation of and potential doses from Argon-41 (Ar-41) for the requested power level and discuss the overall impact on compliance with the 10 CFR Part 20 dose limits for workers and for the maximally exposed member of the public from airborne releases.

DTRR response:
The estimates for Ar-41 given in the response to question 41 and are restated From Attachment 1 of the Response to the Request for additional information dated Sept 24, 2010. The Ar-41 releases from the reactor are 1.3% of the allowable release concentration, which corresponds to a dose of approximately 0.65 mrem/yr, assuming somebody was continuously present at the location of release. This is well below regulatory limits for releases of radioactive material in 10 CFR Part 20 and the ALARA goal of 10 mrem/yr.

44. NUREG–1537, Part 1, Section 11.1.1.2, "Liquid Radioactive Sources" requests the applicant to provide identification and description of liquid radioactive sources, and a discussion of compliance with 10 CFR Part 20, including 10 CFR Section 20.2003 (disposal to sanitary sewers). DTRR SAR, Section K, does not provide sufficient information.

44.1 Please identify expected liquid radioactive sources such as reactor primary coolant and experimental solutions that result from reactor operation or post irradiation processes.

44.2 Please provide a discussion of compliance with 10 CFR Section 20.2003 with respect to disposal of radioactive liquids by release into the sanitary sewer.

DTRR response:
44.1. Liquid experimental solutions are kept in the primary container and are less than 7 ml per sample with total activity at time of removal less than 1000 microCi. Samples are sorted as short lived or long lived waste and sorted by solvent (organic or aqueous). Long lived waste is disposed of through Radiation Safety. Samples are diluted or dissolved in water. Although water is the preferred solvent, other solvents are used including isopropyl alcohol, methanol, Aquasol™, N,N-dimethylformamide, and toluene. Solvents are chosen to keep a low counting background and are high purity.
The reactor primary coolant is not released to the waste water treatment system. The Huron system is flushed monthly with ~4500 gallons of water. This water does not come in contact with the primary reactor water. The pressure in the secondary water line is kept at a high pressure to ensure that pool water does not leak into the secondary water line.

44.2. The DTRR does not dispose of liquid radioactive waste through Dow waste water treatment system.

45. NUREG–1537, Part 1, Section 11.1.1.3, "Solid Radioactive Sources" requests the applicant to provide identification and description of solid radioactive sources, with limited descriptions of solid radioactive waste. DTRR SAR, Section K, does not provide sufficient information.

45.1 Please provide a description of all solid radioactive sources, such as calibration and test sources, experiment samples, and facility components, including radionuclides, curie strengths, and physical characteristics, and if these sources are sealed or unsealed.

DTRR response:
The DTRR has a few solid check sources. These sources are listed following table.

| | | |
|---|---|---|
| AmBe | [redacted] | Sealed |
| Cs-137 | [redacted] | Sealed |
| Cs-137 | [redacted] | Sealed |
| Pa-234 | [redacted] | Sealed |

In addition, experimental samples are typically less than 20 μCi.

46. NUREG–1537, Part 1, Section 11, "Radiation Protection Program and Waste Management," requests the applicant to provide information on various aspects of a reactor's Radiation Protection Program, including: a description of the structure of the organization that administers the radiation protection program; methods and procedures for surveys and monitoring; implementation of contamination control procedures; and implementation of environmental monitoring procedures. The DTRR SAR, Chapter K, provides an overview regarding some aspects of the radiation protection and radioactive waste management programs, but more detail is needed.

46.1 Please provide a description of the DTRR Radiation Protection Program that shows how it meets the requirements of 10 CFR Section 20.1101(a).

46.2 Please describe how the DTRR Radiation Protection Program implements the requirements of 10 CFR Section 20.1101(b) with respect to achieving occupational and public doses ALARA.

46.3 Please describe how the DTRR meets the requirements of 10 CFR Section 20.1101(c) which requires licensees to at least annually review the DTRR Radiation Protection Program content and implementation.

46.4 Please provide a description of the training program that is part of the DTRR Radiation Protection Program.

46.5 Please describe the methods and procedures used for surveys and monitoring that meet the requirements of 10 CFR Section 20.1501(a), (b), and (c) in regards to surveys, calibration of equipment, and personnel dosimetry respectively.

46.6 Please describe how the DTRR Radiation Protection Program implements contamination control in accordance with NUREG–1537, Part 1, Section 11.1.6, "Contamination Control."

46.7 Please describe how the DTRR Radiation Protection Program implements the environmental monitoring program.

DTRR response:

46.1 In the TRIGA Reactor Facility, suitable precautions must be taken against exposure of personnel to radiation and contamination hazards. Radiation Safety activities at The Dow Chemical Company's TRIGA Reactor include posting of radiation signs, training, audits, environmental surveys, personnel monitoring, routine monitoring operations, and record keeping. The Radiation Protection Program is designed to ensure that personnel exposures are maintained within all regulatory limits and are maintained ALARA.

Organization

The Radiation Safety Officer (RSO) is responsible for the development and implementation of the Radiation Protection Program. A Radiation Safety Technician helps support the implementation of the Radiation Protection Program. The RSO is overseen by the site Radiation Safety Committee, which is chaired by a representative of management of the Environmental, Health, and Safety (EH&S) organization. The Radiation Safety Committee includes a member of the TRIGA reactor group, but is independent of the TRIGA reactor organization and has sufficient authority to influence changes in the operation of the TRIGA reactor necessary to protect employees from the hazards of ionizing radiation. The RSO is also a member of the Reactor Operations Committee.

The Reactor Supervisor is responsible for ensuring that the requirements of the Radiation Protection Program are followed and that exposure to radioactivity of all personnel and the environmental release of radioactivity are kept below regulatory limits in 10 CFR Part 20 and to a minimum.

Radiation Warning Signs

Zones of potential radiation and radioactivity hazard will be clearly marked. The posting and maintenance of warning signs are the responsibility of the Reactor Supervisor, based upon advice from the RSO. All areas in which the radiation dose rate exceeds 5 mrem/hr will be posted as a "Radiation Area", in accordance with 10 CFR 20.1091 and 20.1902. Similarly, all areas in which the radiation dose rate exceeds 100 mrem/hr will be posted as a "High Radiation Area". Other areas that contain radioactive materials exceeding 10 times the quantity in 10 CFR 20, Appendix C will be posted with a "Caution, Radioactive Materials" sign.

Areas with elevated levels of airborne radioactivity are not anticipated during normal operations, but in case of a release of radioactivity into the air; creating concentrations that exceed 10% of the values in 10 CFR 20, Appendix B, Table

1, the area will be posted as an "Airborne Radioactivity Area".

Radiation Exposure

All TRIGA reactor personnel who may receive 10% of their allowable annual dose in 10 CFR Part 20 will be assigned dosimeters to wear when performing work with potential exposure to radiation. Dosimeters will be sensitive to the types of radiation to which the employees are exposed, and processed by a processor that holds current NVLAP Accreditation for the types of radiation being measured. Whole body and extremity dosimeter will be used, as appropriate, to fully characterize the exposure to the employee.

For each new situation involving radiation, the radiation dose rate will be evaluated by the use of appropriate radiation survey instruments at the start of the experiment, and personnel exposure will be limited accordingly.

Radiation surveys will be conducted during audits of the facility, and when changes in the facility may result in changes to radiation dose levels. All surveys will be conducted using instrumentation that is appropriate for the types of radiation that they are intended to detect. All instrumentation used for surveys required by regulation are calibrated annually by a company that is licensed for this type of work by the NRC or an Agreement State.

Environmental Monitoring

Radiation levels outside the restricted areas will be monitored using dosimeters. Air samples outside the reactor facility will be taken, if necessary, to detect radioactive materials which may be dispersed in the air, or if there is reason to believe that environmental releases will exceed 10% of the allowable released in 10 CFR 20, Appendix B.

Training

Employees at the TRIGA reactor will undergo training before being allowed to handle radioactive material. The training will consist of the following topics:

- Radiation Fundamentals
- Regulations
- Signs/postings
- TRIGA Reactor Radiation Hazards
- Contamination Control
- Routine and Emergency Procedures

Refresher training will be completed as part of the Reactor Operator Requalification training.

Audits

The RSO audits the Radiation Protection Program for content and implementation annually. A written report of this audit is discussed at the Reactor Operations Committee.

Contamination Control

Work involving the use of radioactive materials is performed in a manner to minimize the spread of radioactive contamination in the facility. All radioactive material work is performed in marked areas. Most samples remain in sealed vials throughout the counting process. Protective clothing is worn by personnel to prevent skin contamination, and disposed of in appropriate waste containers. Potentially contaminated items are surveyed prior to removal from a radioactive work area. Geiger-Mueller survey meters are used to detect contamination on personnel and equipment in the facility. Additionally, wipe tests of radioactive work areas are conducted monthly, and any areas of elevated contamination are cleaned promptly.

Record Keeping

All records required to demonstrate compliance with 10 CFR Part 20 and required by the Radiation Protection Program, including ALARA program records, occupational dose records, monitoring methods and results, and training records, are maintained by the Radiation Safety Officer.

46.2 ALARA Program

The Radiation Protection Program for the TRIGA reactor is designed to maintain radiation exposures to workers and members of the public (including both internal and external exposures) ALARA. The ALARA program is owned by the Radiation Safety Committee to ensure that unnecessary exposures to radiation are avoided. Individuals will not occupy areas where radiation exposure levels are above background levels unless it is necessary in the performance of their job. Good housekeeping and contamination control will be practiced in all radioactive material use and storage areas to control internal exposures.

Investigation levels will be identified at personnel dose levels well below regulatory dose limits that will trigger a formal investigation by the RSO. Additionally, personnel exposures will be reviewed annually to identify trends in exposure and opportunities for reductions in exposures.

46.3 Annual Review

The RSO audits the Radiation Protection Program of the TRIGA reactor for content and implementation annually. A written report of this audit is discussed at the Reactor Operations Committee.

46.4 Training

Refer to Training section in response to RAI 46.1, above.

46.5 Surveys and Monitoring

Refer to Radiation Exposure, Environmental Monitoring, and Contamination

Control sections in response to RAI 46.1, above. Additionally, an area radiation monitor and an airborne radioactivity monitor will be maintained in the reactor room to alarm if elevated levels of radiation or airborne radioactivity are detected.

46.6 Contamination Control
Refer to Contamination Control section in response to RAI 46.1, above.

46.7 Environmental Monitoring
Refer to Environmental Monitoring section in response to RAI 46.1, above.

47. NUREG–1537, Part 1, Section 11.2, "Radioactive Waste Management" requests the applicant to provide information concerning waste management. DTRR SAR, Section K, does not provide sufficient information. Please describe how the DTRR Radiation Protection Program controls, manages, and releases radioactive waste.

DTRR response:
Short lived and long lived waste storage and disposal are controlled by procedures found in the Radiation Protection Program. Long lived waste is characterized for isotope and activity and transferred to Radiation Safety. Radiation Safety is trained for shipping. Radiation Safety is responsible for shipping long lived waste to a licensed vendor. For waste that is characterized as mixed waste, Dow has a licensed incinerated. Short lived waste is stored for at least 10 half lifes of the longest lived isotope. Fiber packs used to hold samples are labeled with isotope, date sealed, and owner name. These fiber packs are stored in a locked area with restricted access. Access to this area is controlled by the Facility Director.

48. NUREG–1537, Part 1, Section 12.1 "Organization" requests the applicant to provide a description of the organizational structure, responsibilities, and staffing, including the selection and training of personnel. DTRR SAR, Section L.1, Figure 8, "Organizational Structure," does not agree with DTRR TS 6.1, "Organization," Figure 6.1. The duties of the Facility Director are not described. Please provide clarification of the differences in the two organization charts and describe the duties of the Facility Director.

DTRR response:
The organizational chart provided in Figure 8 of the SAR is the management structure for the reactor personnel. DTRR TS 6.1 also indicates the relationship of the Reactor Operations to the Radiation Safety Officer. The facility director is responsible for the reactor facility operations.

an LCO for monitoring pool leaks, loss-of-coolant, and isolation valve positions which were not found in the DTRR TS 3.4, Coolant System.

61.4 ANSI/ANS-15.1-2007, Section 3.7, "Radiation Monitoring Systems and Effluents" recommends an LCO for monitoring environmental conditions which is not found in DTRR TS 3.6, Radiation Monitoring Systems.

61.5 ANSI/ANS-15.1-2007, Section 3.8.1 recommends a limit for the sum of the absolute values of the reactivity worth of all experiments. DTRR TS 3.7, "Experiments" provides a limit for the total absolute reactivity worth of in-core experiments that is inconsistent with this recommendation.

61.6 ANSI/ANS-15.1-2007, Section 3.8.1 recommends a specification for the absolute reactivity worth of individual experiments. DTRR TS 3.7, "Experiments" does not provide reactivity worth limits for individual unsecured, secured or movable experiments.

61.7 NUREG-1537, Part 1, Appendix 14.1, Section 3.8.2, "Materials," recommends that containers for experiments containing known explosive materials be designed such that the design pressure of the container is twice the pressure the experiment can potentially produce. DTRR TS 3.7, "Experiments" Specification 5 does not include this guidance for known explosive material containers.

DTRR response:

61.1. An LCO for fuel burn-up has been added to the proposed TS.

61.2. A specification has been added to allow for limited bypassing of channels for checks, calibration, maintenance or measurements.

61.3. A specification has been added requiring a pool water level alarm.

61.4. An LCO for an environmental monitor has been added to TS 3.6.

61.5. An LCO was added regarding the sum of the absolute reactivity worths has been added.

61.6. TS 3.7.3 is the specification for movable experiments.

61.7. TS3.7.5 has been revised to include that the pressure produced by an experiment is less than half the design pressure of the container.

62. ANSI/ANS-15.1-2007, Section 4, "Surveillance Requirements," identifies recommended Surveillance Requirements (SRs). The following

inadequacy causes or could have caused the existence or development of an unsafe condition with regard to reactor operations.

g) Release of radioactivity from the site above limits specified in 10CFR20.

58.2. Reactor shutdown - The reactor is shutdown if it is subcritical by at least one dollar in the reference core condition with the reactivity worth of all installed experiments included.

58.3. Shutdown margin - Shutdown Margin is the minimum shutdown reactivity necessary to provide confidence that the reactor can be made subcritical by means of the control and safety systems starting from any permissible operating condition and with the most reactive rod in the most reactive position and that the reactor will remain subcritical without further operator action.

58.4. Excess reactivity - Excess reactivity is that amount of reactivity that would exist if all reactivity control devices were moved to the maximum reactive condition from the point where the reactor is exactly critical ($k_{eff}$=1) at reference core conditions.

58.5. Limited Safety Systems Setting - A LSSS is the limiting value for settings of safety channels by which point protective action must be initiated.

61. ANSI/ANS-15.1-2007, Section 3, "Limiting Conditions for Operations" and NUREG-1537, Part 1, Appendix 14.1, Section 3.8.2, "Materials," provide recommended LCOs. Some differences were noted with the DTRR TS LCOs. Please explain and justify why the DTRR TS LCOs differ from these guidance documents or consider revising the LCOs.

61.1 ANSI/ANS-15.1-2007, Section 3.1, "Reactor Core Parameters" recommends an LCO for fuel inspection not found in the DTRR TS LCOs.

61.2 ANSI/ANS-15.1-2007, Section 3.2, "Reactor Control and Safety Systems" recommends a specification for permitted bypassing of channels for checks, calibrations, maintenance, or measurements. DTRR TS 3.3, "Reactor Control and Safety Systems" does not specify when it is permitted to bypass channels for checks, calibrations, maintenance or measurements.

61.3 ANSI/ANS-15.1-2007, Section 3.3, "Coolant Systems" recommends

58.1 "Reportable Occurrence" as defined in the DTRR TSs 1.29c and 1.29f do not conform to ANSI-15.1-2007 Sections 6.7.2(1)(c)(iii) and 6.7.2(1)(c)(vi).

58.2 "Reactor Shutdown" does not include reference core condition in the definition as recommended by ANSI/ANS-15.1-2007.

58.3 "Shutdown Margin" does not conform to the definition in ANSI-15.1-2007.

58.4 "Excess Reactivity" does not include reference core condition in the definition as recommended by ANSI/ANS-15.1-2007.

58.5 "Limiting Safety System Settings" does not conform to the description of the LSSS in ANSI/ANS-15.1-2007, Section 2.2, "Limiting Safety System Settings."

DTRR response:
The DTRR TS for the license renewal is attached. Definitions have been changed to conform to the ANSI/ANS 15.1 standard. The revised definitions are listed below.

58.1. Reportable Occurrence - A Reportable Occurrence is any of the following

a) Operation with actual safety system settings for required systems less conservative than the limiting safety system settings specified in Technical Specification 2.2.

b) Operation in violation of limiting conditions for operation established in the Technical Specifications.

c) A reactor safety system component malfunction which renders or could render the reactor safety system incapable of performing its intended safety function unless the malfunction or condition is caused by maintenance, then no report is required.

d) Any unanticipated or uncontrolled change in reactivity greater than one dollar. Reactor trips resulting from a known cause are excluded.

e) Abnormal and significant degradation in reactor fuel, cladding, or coolant boundary.

f) An observed inadequacy in the implementation of either administrative or procedural controls such that the

49. NUREG–1537, Part 1, Section 12.1.3, "Staffing" requests the applicant to provide a description showing how the staffing requirements of 10 CFR Section 50.54 are met. DTRR SAR, Section L.1.2, states that the staffing meets all requirements of 10 CFR Section 50.54 but does not show how this is accomplished. Please show how the staffing requirements of 10 CFR Section 50.54 are met.

DTRR response:
As stated in L.1.2 the DTRR is "staffed with a minimum of two licensed senior reactor operators. These two licensed reactor operators are used to meet 10 CFR 50.54 (4) (i) (i-1), (j), (k),(l), and (m)(1). A licensed operator shall be present to manipulate control rods or any operation which may affect the reactivity or power level of the reactor. A licensed operator shall be present at all times during the operation of the reactor. A licensed operator shall be on-call for the activities described in 10 CFR 50.54 (m)(1). Therefore two operators met the requirements in 10 CFR 50.54.

50. NUREG–1537, Part 1, Section 12.3, "Procedures" requests the applicant to provide an overview of procedures used at their reactor. DTRR SAR, Section L.3.12, "Control Rod Inspection and Removal," describes the rod drop time test but provides no information regarding control rod inspection and removal. Please describe the procedure used for control rod removal and inspection, including the applicable console settings and how shutdown margin is maintained.

DTRR response:
Procedure 4.4.1 details the control rod removal and inspection procedure. This inspection is done after the annual fuel inspection is complete. As part of the Annual fuel inspection, two fuel elements are removed from the B ring to become subcritical. Subcriticality is confirmed by measuring core excess with these elements remove. The console remains operational to monitor power and water temperature. The control rods are disconnected from the bridge. Drive mechanisms are disconnected. One at a time the control rods are withdrawn from the core and maneuvered for inspection and replaced to their original location. The drives are reattached and powered. Full range of movement, and scram functions are tested prior to any operations. Each inspection is followed by Control Rod Worth determinations and thermal power calibration.

58. American National Standards Institute/American National Standards (ANSI/ANS)-15.1-2007, Section 1.3, provides definitions commonly used in Research and Test Reactor TSs. The DTRR TS definitions noted below did not conform or lacked recommended detail. Please explain and justify the differences noted below or consider revising these definitions.

differences were noted in comparison to DTRR TS surveillance requirements. Please provide justification regarding the differences noted or consider revising the surveillance requirements noted below.

62.1 DTRR TS 4.0, "Surveillance Requirements" does not specify which surveillances, if any, are required for safety while the reactor is shutdown and thus should not be deferred during a period when the reactor is shutdown.

62.2 DTRR TS 4.0, "Surveillance Requirements" does not specify which surveillances are required prior to, or following maintenance, inspection, and fuel movement activities.

62.3 DTRR TS 4.2, "Reactor Control and Safety Systems" Specification 2 accomplishes calibration of NM1000, however, no equivalent specification applies to NPP1000.

62.4 ANSI/ANS-15.1-2007, Section 4.3(4) recommends that reactor coolant be analyzed for radioactivity annually. This specification was not found in DTRR TS 4.3, "Coolant Systems."

62.5 DTRR TS 3.5, "Confinement" has no corresponding SR.

62.6 DTRR TS 3.8, "Experiments" has no corresponding SR.

62.7 DTRR TS 4.4, "Radiation Monitoring Systems" does not specify the frequency of evaluation of environmental monitors.

DTRR response:

62.1. TS 4.0 has been changed to include the following. "Required surveillances of the CAM and ARM shall not be deferred for extended reactor shutdown."

62.2. TS 4.1 requires that the reactivity worth of each control rod, reactor core excess and reactor shutdown margin be at least annually and after each time the core fuel is moved.

62.3. The NPP1000 channel calibration has been added to TS 4.2.2.

62.4. TS 4.3.1 requires monthly testing of the pool water. This specification exceeds the ANSI/ANS-15.1-2007, Section 4.3(4).

62.5. TS 3.5 requires that the ventilation systems shall be operational when the reactor is operated fuel is manipulated, or radioactive materials with the potential of airborne releases are handled in the reactor room.

62.6. TS 3.7 has been changed to include a surveillance requirement for experiments.

62.7. A surveillance requirement for environmental monitoring has been added to TS 4.4. "The environmental monitors shall be changed at least semi-annually."

63.2 In DTRR TS 3.1, "Reactivity limits" the Bases for this LCO do not have an explanation or DTRR SAR reference for the reactivity limits stated. The Bases do not include data for all components of the excess reactivity and shutdown margin evaluation and how the components are used.

DTRR response:
The DTRR Safety analysis report D5 describes the reactivity of the DTRR core. Control rods worths are determined using the procedure summarized in L3.9. Control rod worths measured Jan 2011 are Reg Rod - $1.01, Shim 1-$2.60, Shim 2-$2.73. Shutdown Margin is calculated as

$$SDM = WR + WSL - XS$$

SDM=shutdown margin
WR- total worth of the reg rod
WSL- is the smaller of the total reactivity worths of the shim rods
XS – measured core excess

64. ANSI/ANS-15.1-2007, Section 5.0, "Design Features" provides information, identified below, regarding content and format that was not found in the DTRR TS. Please provide additional information for each of the following:

64.1 ANSI/ANS-15.1-2007, Section 5.1, "Site and Facility Description" recommends a description of the site and the facility expressly identifying the extent of the reactor license coverage.

64.2 ANSI/ANS-15.1-2007, Section 5.2, "Reactor Coolant System" requests a description of the reactor coolant system including materials and applicable temperatures.

64.3 ANSI/ANS-15.1-2007, Section 5.3, "Reactor Core and Fuel" recommends providing a description of: 1) core parameters including fuel enrichment; 2) conditions for operation of the reactor with damaged or leaking fuel elements; and 3) fuel burn-up limits.

DTRR response:
64.1. A definition of licensed area has been added to the TS definitions.

64.2. The reactor coolant is deionized water. A sentence has been added to TS 3.4 for clarity. Additionally the temperature, pH and conductivity limits are defined in TS 3.4.

64.3. Fuel enrichment is defined in the TS definition 1.40. Conditions for operation with damaged fuel are described in TS 4.5. Fuel burn-up has been added to the definition of damaged fuel.

65. ANSI/ANS-15.1-2007, Section 6, "Administrative Controls" provides recommendations regarding content and format. DTRR TSs differences from these recommendations were noted. Please provide additional information for the following:

65.1 ANSI/ANS-15.1-2007, Section 6.1, "Organization" recommends organizational structures including levels and reporting authority. DTRR TS Figure 6.1, the DTRR organization structure, includes no level 3 or 4 staff and differs from Figure

8.0 of the DTRR SAR.

65.2 ANSI/ANS-15.1-2007, Section 6.1.2, "Responsibility" describes responsibilities for the operation and safeguarding of the public which was not fully described in DTRR TS 6.1.2. Please describe the Facility Director's responsibilities and clarify what is meant by "management sense."

65.3 ANSI/ANS-15.1-2007, Section 6.1.3(3), "Staffing" lists those events requiring the senior reactor operator to be present at the facility. DTRR TS 6.1.3 does not include initial startup and approach to power recommended by ANSI/ANS-15.1, Section 6.1.3(3)(a) and required by 10 CFR Section 50.54(m)(1).

65.4 ANSI/ANS -15.1-2007, Section 6.1.4, "Selection and Training of Personnel" recommends meeting or exceeding the criteria in ANSI/ANS-15.4-1988 (R1999). DTRR TS 6.1.4 states that the implementation shall be consistent with all current regulations but does not indicate what regulations or guidance is being met.

65.5 ANSI/ANS-15.1-2007, Section 6.2.2, "Charter and Rules" provides recommendations that are incorporated into DTRR TS 6.2.1 except for the provision for "quick action" in DTRR TS 6.2.1. Please explain what this means and when this would be necessary.

65.6 ANSI/ANS-15.1-2007, Section 6.2.4, "Audit Function" recommends an audit of the facility emergency plan and implementing procedures and the operator requalification program that is performed by an individual not immediately responsible for the audited area. DTRR TS 6.2.3.b states that these audits may be satisfied by the annual review of these plans for the requalification program.

Please explain how this audit process meets the recommendation that the audit be performed by an individual not immediately

responsible for the area audited.

65.7 ANSI/ANS-15.1-2007, Section 6.4, "Procedures," recommends procedures for several categories of activities. DTRR TS 6.3 does not apply this recommendation to emergency and security plans, surveillances, and experiments.

65.8 ANSI/ANS-15.1-2007, Section 6.5, "Experiment Review and Approval" recommends that experiments be carried out in accordance with approved procedures. DTRR TS 6.4 does not describe the process of experiment review and approval for new experiments.

65.9 ANSI/ANS-15.1-2007, Section 6.7, "Reports" provides recommendations for reporting activities. The DTRR TS Section 6.6.1 (c) uses the outdated terminology "unreviewed safety question."

65.10 ANSI/ANS-15.1-2007, Section 6.7.2(1), "Special Reports" specifies facsimile or similar conveyance of the special report. DTRR TS 6.6.2.a specifies telegraph of similar conveyance.

65.11 ANSI/ANS-15.1-2007, Section 6.8, "Records" provides recommendations for record retention. ANSI/ANS-15.1-2007, Section 6.8.2 recommends an administrative control that retraining and requalification records for operators be retained for at least one certification cycle (per 10 CFR 55.55(a) this period is 6 years) and be maintained at all times the individual is employed or until the certification is renewed. DTRR TS 6.7.2 is not consistent with this ANSI/ANS Section 6.8.2 guidance.

65.12 ANSI/ANS-15.1-2007, Section 6.8.3, "Records to be retained for the lifetime of the reactor facility" recommends certain records be maintained for the lifetime of the facility. DTRR TS 6.7.3 does not implement the full extent of those recommendations (e.g. it does not include records of violations of safety limits, LSSS, LCOs; environmental monitoring; or approved changes in operating procedures).

DTRR response: Changes have been made to the DTRR TS to meet or exceed the ANSI/ANS-15.1.

65.1. Figure 8 of the SAR is the reporting structure for the reactor operations staff and does not include the reporting structure for the Radiation Safety Officer. Figure 6.1 of the TS has been changed to comply with ANSI/ANS-15.1. Figure 6.1 includes the chain of command for the Radiation Safety Officer.

65.2. This has been removed from TS 6.1.2.

65.3. Initial start-up has been added to the TS 6.1.3.

65.4. ANSI/ANS -15.4 4 through 7 has been added as a reference.

65.5. Reference to a Quick action has been removed from the TS. TS 6.2.1 is to authorize the ability to poll the ROC via phone or email.

65.6 TS 6.2.3.b has been changed to state that the ROC will direct a biennial audit of the emergency plan.

65.7. Emergency Plan procedures are required in TS 6.3.b. Surveillances procedures are addressed in TS 6.3.e. A requirement for procedures for operation of each experimental facility has been added as TS 6.3.f.

65.8. The following restriction has been added to TS 6.4. No experiment shall be performed without review and approval by Reactor Operations Committee. Experiments are approved and classified by the ROC as Routine, Modified Routine or Special. Experiments shall be reviewed with respect to 10 CFR part 20, and TS 3.7.

65.9. The phrase "unreviewed safety question" has been replaced with "they are allowed without prior authorization by the Nuclear Regulatory Commission"
65.10. Reference to use of a telegraph has been eliminated.

65.11. TS 6.7.2 has been revised to include the retention time specified in ANSI/ANS section 6.8.2.

65.12 TS 6.8.3 has been revised to include the retention of safety violations, LSSS, LCO; environmental monitoring, and approved changes in the operating procedures.

66. NUREG–1537, Part 1, Appendix 14.1, Section 6.6.2 "Action To Be Taken in the Event of an Occurrence of the Type Identified in Sections 6.7.2(1)(b) and 6.7.2(1)(c)" states that in cases where the applicant chooses to employ alternative actions (shut down or return to normal) specific criteria should be established. DTRR TS 6.5.2 does not establish criteria for determining when the reactor must be shut down or when it can be returned to normal operation. Please describe and justify the need for the alternative action "reactor conditions shall be returned to normal" by providing examples of when this alternative action would be used in the event of a reportable occurrence as defined by DTRR TS 1.29

DTRR response:
An example has been added to the TS 6.5.2.

67. NUREG–1537, Part 1, Section 16.1, "Prior Use of Reactor Components"

requests the applicant to provide information on prior use of items significant to safety, such as fuel cladding, reactivity control system, engineered safety features, and radiation monitoring systems. This means evaluating the continued serviceability of originally supplied components (e.g., for aging and wear); and also to consider the suitability of items supplied by other facilities. DTRR SAR Chapter P.1 does not provide sufficient detail regarding the prior use and continued use of items significant to safety.

DTRR response:
The DTRR equipment and instruments show no sign of failure. Equipment and instrumentation are calibrated, maintained, repaired and replaced as warranted.

# SAFETY ANALYSIS REPORT FOR THE DOW TRIGA RESEARCH REACTOR

## 300 kW

## 2008

Table of Contents

A. THE FACILITY ..... 10

A.1. Introduction ..... 10

A.2. Summary and Conclusions on Principal Safety Considerations ..... 10

A.3. General Description ..... 10

A.4. Shared Faculties and Equipment ..... 11

A.5. Comparison with Similar Facilities ..... 11

A.6. Summery of Operations ..... 11

A.7. Compliance with the Nuclear Waste Policy Act of 1982 ..... 11

A.8. Facility Modifications and History ..... 11

A.8.1. Pneumatic Transport System Terminal ..... 11

A.8.2. The Control System Console ..... 11

A.8.3. Heat Exchange System ..... 11

A.8.4. Power Rating ..... 12

B. SITE CHARACTERISTICS ..... 12

B.1. Geography Demography ..... 12

B.1.1. Site Location and Description ..... 12

B.1.2. Population Distribution ..... 13

B.2. Nearby Industrial, Transportation and Military Facilities ..... 14

B.2.1. Locations and Routes ..... 14

B.2.2. Air Traffic ..... 15

B.2.3. Analysis of potential accidents at the facility ..... 15

B.3. Meteorology ..... 15

B.3.1. General and Local Climate ..... 16

B.3.2. Site Meteorology ..... 16

B.4. Hydrology ..... 18

B.5. Geology, Seismology, and Geotechnical Engineering ..... 18

B.5.1. Regional Geology ..... 18

B.5.2. Site Geology ..... 18

B.5.3. Seismology ..... 19

B.5.4. Maximum earthquake potential ..... 21

B.5.5. Vibratory Ground Motion ..... 21

B.5.6. Surface faulting ..... 21

B.5.7. Liquefaction Potential ..... 21

B.6. Bibliography ..... 21

C. DESIGN AND STRUCTURES, SYSTEM AND COMPONENTS ..... 22

C.1. Design Criteria ..... 22

C.2. Meteorological Damage ..... 22

C.3. Water Damage ..... 22

C.4. Seismic Damage ..... 22

C.5. Systems and Components ..... 22

D. REACTOR DESCRIPTION ..... 23

D.1. Summary Description ..... 23

D.2. Reactor Core ..... 27

D.2.1. Fuel-moderator elements ..... 27

D.2.2. Control Rods and Drives ..... 27

D.2.3. Neutron Moderator and Reflector ..... 27

D.2.4. Neutron Start up Source ..... 28

D.2.5. Core support structure ..... 28

D.3. Reactor Tank or Pool ..... 28

D.4. Biological Shield ..... 28

D.5. Core Physics - Design Bases ..... 29

D.5.1. Critical Mass ..... 29

D.5.2. Void Coefficient ..... 29

D.5.3. Moderating Properties of Zirconium Hydride ..... 29

D.5.4. Temperature Coefficient ..... 30

D.5.5. Reactivity Associated with Experimental Facilities are: ..... 30

E. REACTOR COOLANT SYSTEM ..... 31

E.1. Summary Description ..... 31

E.2. Reactor Water Cooling and Purification System ..... 31

E.3. Primary Coolant System ..... 32

E.3. Secondary Coolant System ..... 32

E.4. Primary Coolant Clean-up System ..... 33

E.5. Primary Coolant Make-up Water System ..... 33

E.6. Nitrogen -16 Control System ..... 33

E.7. Auxiliary Systems using Primary Coolant ..... 33

F. ENGINEERED SAFETY SYSTEMS ..... 34

F.1. Summary Description ..... 34

F.2. Detailed Description ..... 34

F.2.1. Confinement ..... 34

F.2.2. Containment ..... 34

F.2.3. Emergency Core Cooling ..... 34

G. INSTRUMENTATION AND CONTROL SYSTEMS ..... 35

G.1. Summary Description ..... 35

G.2. Design of Instrumentation and Control Systems ..... 35

G.3. Reactor Control Instrumentation ..... 35

G.3.1. Wide-Range Log/Linear - Period Channel – NM 1000 ..... 35

G.3.2. Linear Power Channel ..... 35

G 3.3. Automatic Power Control System ..... 36

G.4. Reactor Protection System ..... 36

G.4.1. Water Conductivity Monitor ..... 36

G.4.2. Water Temperature Monitor ..... 36

G.5. Engineered Safety Features Actuation System ..... 36

G.6. Control Console and Display Instruments ..... 36

G.7. Radiation Monitoring System ..... 36

G.7.1. Water Radioactivity Monitor ..... 36

G.7.2. Area Radiation Monitor ..... 37

G.7.3. Continuous Air Monitor ..... 37

H. ELECTRICAL POWER SYSTEMS ..... 38

H.1. Normal Electrical Power ..... 38

H.2. Emergency Electrical Power System ..... 38

I. AUXILIARY SYSTEMS ..... 39

I.1. Heating, Ventilation and Air Conditioning System ..... 39

I.2. Handling and Storage of Reactor Fuel ..... 39

I.3. Fire Protection System and Programs ..... 39

I.4. Communication System ..... 39

I.5. Possession and Use of Byproduct, Source and Special Nuclear Material ..... 40

I.6. Cover gas control in closed Primary Coolant Systems ..... 40

I.7. Other Auxiliary Systems ..... 40

J. EXPERIMENTAL FACILITIES AND UTILIZATION ..... 41

J.1. Summary Description ..... 41

J.2. Experimental Facilities ..... 42

J.2.1. Rotary Specimen Rack ..... 42

J.2.2. Pneumatic Transfer System ..... 42

J.2.3. Dummy Fuel -Element ..... 43

J.2.4. Water Region ..... 43

J.2.5. Central Thimble ..... 43

J.3. Experimental Review ..... 43

K. RADIATION PROTECTION PROGRAM AND WASTE MANAGEMENT ..... 46

K.1. Radiation Protection ..... 46

K.1.1. Radiation sources ..... 46

K.1.2. Radiation protection program ..... 46

K.1.3. ALARA ..... 46

K.1.4. Radiation Monitoring and Surveying ..... 46

K.1.5. Radiation Exposure Control and Dosimetry ..... 47

K.1.6. Contamination control ..... 47

K.1.7. Environmental Monitoring ..... 47

K.2. Radioactive Waste Management ..... 48

K.2.1. Radioactive Waste Control ..... 48

K.2.2. Release of Radioactive Waste. ..... 48

L. CONDUCT OF OPERATIONS ..... 49

L.1. Organization ..... 49

L.1.1. Responsibility ..... 50

L.1.2. Staffing ..... 52

L.1.3. Selection and Training of Personnel ..... 52

L.1.4. Radiation Safety ..... 53

L.2. Review and Audit Activities ..... 53

L.2.1. Composition and qualifications ..... 53

L.2.2. Charter and Rules ..... 53

L.2.3. Review Function ..... 53

L.2.4. Audit function ..... 54

L.3. Procedures ..... 54

L.3.1. Daily Prestart Checkout ..... 56

L.3.2. Daily start-up/ shutdown ..... 57

L.3.3. Monthly Checklist ..... 60

L.3.4. Semi-Annual Checkout ..... 61

L.3.5. Annual checkout ..... 61

L.3.6. Thermal Power Calibration ..... 62

L.3.7. Area Monitor Calibration ..... 62

L.3.8. Water Radioactivity Monitor Calibration ..... 63

L.3.9. Control Rod Calibration ..... 64

L.3.10. Handling Special Nuclear Material ..... 64

L.3.11. Annual Fuel Inventory ..... 64

L.3.12. Control Rod inspection and removal. ..... 65

L.3.13. Plant operations and auxiliary equipment maintenance ..... 65

L.3.14. Maintenance ..... 66

L.3.15. Placement and removal of samples from the Rotary Specimen Rack ..... 69

L.3.16. Wipe tests and Surveys ..... 70

L.3.17. Procedure for disposal of Radioactive waste ..... 70

L.3.18. Burn-up calculation ..... 71

L.3.19. Emergencies ..... 72

L.4. Required Actions ..... 72

L.4.1. In case of a Safety Limit Violation ..... 72

L.4.2. Reportable Occurrence ..... 73

L.5. Reports ..... 73

L.5.1. Operating Reports ..... 73

L.5.2. Special Reports ..... 74

L.6. Records ..... 74

L.7. Emergency Planning ..... 75

L.8. Security Planning ..... 75

L.9. Operator Training and Requalification ..... 75

L.10. Start-up Plan ..... 77

L.11. Environmental Report ..... 77

M. ACCIDENT ANALYSIS ..... 77

M.1. Accident – Initiating Events and Scenario ..... 77

M.1.1. Loss of Coolant ..... 78

M.1.2. Reactivity Insertion ..... 79

M 1.3. Mishandling or Malfunction of Fuel ..... 80

M.1.4. Experiment Malfunction ..... 80

M.1.5. Loss of Normal Electrical Power ..... 80

M.1.6. External Events ..... 81

M.1.7. Mishandling or Malfunction of Equipment ..... 81

M.2. *Summary and Conclusion* ..... 81

M.3. Bibliography ..... 81

N. TECHNICAL SPECIFICATIONS ..... 82

O. FINACIAL QUALIFICTIONS ..... 129

O.1. Financial Ability to Operate a Non-power reactor ..... 129

O.2 Financial ability to Decommission the Facility ..... 129

P. Other License Considerations ..... 129

P.1. Prior Use of Reactor Components ..... 129

P.2. Medical Use of Non-power reactor ..... 130

Q. Decommissioning and Possession only ..... 130

Q.1. Decommissioning ..... 130

R. Highly enriched to low enriched uranium conversions ..... 130

- Figure 1. Site Map.....13
- Figure 2. Population distribution for Midland County .....14
- Figure 3. Wind Rose 2003-2006 MBS Airport..... 16-18
- Figure 4. Cutaway View of the pool and core.....25
- Figure 5. TRIGA Fuel element .....26
- Figure 6. Reactor Coolant System.....31
- Figure 7. Flow Sheet for Special Experiment Approval .....45
- Figure 8. Organiztional Structure .....49

# A. THE FACILITY

## A.1. Introduction

This Safety Analysis report documents the operational and design characteristics of the Dow TRIGA research reactor. The report, in general, follows the suggested format of NUREG-1537. The report and addendums are submitted to support the relicensing of the Dow TRIGA research reactor for 20 years. Hazards describe theoretical scenarios that are statistically probable but are highly unlikely. None of the scenarios outlined in this report have occurred in a licensed commercial or university research reactor.

## A.2. Summary and Conclusions on Principal Safety Considerations

This Safety Analysis report demonstrates and documents the inherent and engineered systems provide for the continued safe operation of the Dow TRIGA Research reactor.

The operational safety of the DOW TRIGA Research reactor is based on the TRIGA reactor fuel, current instrumentation, and operational controls. Additionally, this analysis will show that no abnormal operating condition or potential accident that would risk the health and safety of the public.

## A.3. General Description

The Dow TRIGA Research Reactor was constructed as a 100 kilowatt nuclear reactor by General Atomics, Incorporated. This facility was installed in 1966-1967 and achieved initial criticality on July 6, 1967, under license R-108. The reactor was fueled with 75 stainless steel-clad TRIGA elements and one aluminum-clad TRIGA element, containing 235-uranium as nominally 20% enriched uranium in the uranium zirconium-hydride fuel. The reactor is used within the Analytical Sciences of The Dow Chemical Company as part of a research program involving neutron activation analysis, isotope production, neutron radiography, and irradiation studies.

The core located near the bottom of a 20 by 6 right cylinder pool. The exterior of the pool is covered with felt and pitch to limit corrosion. Additionally the pit is encased by a 3 foot concrete shell which is then surrounded by a corrugated steel tank. There is no below grade access to the tank and there are no penetrations of the tank walls.

The reactor is equipped with a rotary specimen rack (lazy susan), pneumatic transfer system (rabbit) and a beam port installed in the central thimble. Radiation levels are continuously monitored in the reactor room by both a continuous air monitor and an area monitor.

Water quality is maintained with inline filters and a mixed resin bed, and a skimmer. The reactor is cooled by natural convection and equipped with a closed loop and an open loop heat exchange system. Pool water is continuously monitored for radioactive material.

Radioactive materials may be transferred to a licensed disposal facility periodically. These materials are first separated into long lived and short lived isotopes. Typically these materials include samples, sample vials, gloves, and paper towels.

The reactor license was renewed and up-rated to 300 kW in 1989. The console was upgraded in 1990. The heat exchange upgrade was completed in 2005.

## A.4. Shared Faculties and Equipment

The Dow TRIGA Research reactor is located building 1602 of The Dow Chemical Company – Midland Operations. With the exception of the dedicated room exhaust duct and chiller for the heat exchanger, the water, electrical, HVAC and maintenance are from the central source.

## A.5. Comparison with Similar Facilities

The design of the Dow TRIGA research reactor is similar to other TRIGA reactor. The functional characteristics of the Control and Instrumentation are also similar. Approximately 40 TRIGA reactors were built in the late 1950 and early 1960's. The operational history of these reactors has proven to be safe and secure. The TRIGA reactor design has proven to be exceptionally safe and robust, in fact new TRIGA reactors are currently being built.

## A.6. Summery of Operations

The Dow TRIGA research Reactor was originally licensed at 100 kW. The uprate in power to 300 kW occurred with the 1989 relicensing. The reactor is operated at varying power levels up to 250 kW. Since 2000, the average output is 2MW-d and a burn-up rate of 2 grams of U-235 per year. The reactor has been utilized primarily for neutron activation analysis.

## A.7. Compliance with the Nuclear Waste Policy Act of 1982

In accordance with the Nuclear Waste policy Act of 1982 The Dow Chemical Company has entered into a contract with the U.S. Department of Energy to return the fuel at the cessation of operation. Contract #DE-CR01-83-NE-44483.

## A.8. Facility Modifications and History

### A.8.1. Pneumatic Transport System Terminal

In 1982 the terminal of the pneumatic transport system in the hot-lab hood was modified to include an automatic feed mechanism and an on-line gamma-ray detector. This allowed the operator to load the terminal with a number of samples which could in turn be activated in the core and counted using the Ge(Li) detector, with computer storage of data or complete spectra and with little or no intervention by the operator.

### A.8.2. The Control System Console

The console was replaced in the early 1990's using General Atomics as the vendor. The system is characterized by redundancy monitoring channels and multiple SCRAM triggers.

### A.8.3. Heat Exchange System

A closed loop heat exchanger was added to the operational open loop cooling system. The old system, is a one-pass through water cooling system. The water is obtained from the plant water, forced through the heat exchanger and it is discharged into the sewer. Its capacity is about 100 kW. In the closed loop heat exchanger, the coolant is pumped through a chiller and forced through the heat-exchanger. The outlet is passed through an air separator which then vents it into and an air tank before it is fed back into the pump. Its capacity is about 1MW. The design of the heat exchanger is such that the pool water does not come in contact with the coolant nor does the coolant enter the sewer system. This modification occurred in 2004 and 2005.

### A.8.4. Power Rating

The licensed power level was increased from 100 kW to 300 kW in 1989.

# B. SITE CHARACTERISTICS

The site characteristics have not changed significantly since the reactor was installed in 1967. Several buildings have been built within the research area (a current map of the research area is presented in figure 1). The building which contains the reactor facility is not accessible to the public. The character of the neighborhoods to the west and north of the Dow research area has changed little - small businesses to the west, an open greenbelt to the north, with the nearest residences about ½ mile to the north. The weather patterns and the seismologic record have not changed significantly since the original analysis in 1966-67.

This section provides a description of the characteristics and utilization of the site.

## B.1. Geography Demography

Midland, Michigan, a city with a population of about 42,000 people, is located at the confluence of the Tittabawassee and Chippewa Rivers at 430 37' north latitude, 840 13' west longitude, at a nominal elevation of 642 feet above sea level. The city is the home of the corporate headquarters of The Dow Chemical Company and of a major portion of the Michigan Division of The Dow Chemical Company. Midland is the county seat of Midland County( population ~80,000), an area of flat or gently rolling farmland. Bay City, with a population of about 37,000 lies about 20 miles to the east of Midland, and is a port on Lake Huron. Saginaw, with a metropolitan population of about 62,000 people, is a manufacturing center about 25 miles south-east of Midland.

The major residential areas of the city of Midland lie to the north and west of the manufacturing site, with most expansion over the past 20 years taking place in those areas. The nearest residence to the reactor site is about 0.3 mile to the north.

Portions of Bay City Road and Austin Street, between Washington Street on the east and Pershing Street on the west, have been vacated by the city and enclosed to become part of the Dow complex. A major portion of this area is occupied by a 150,000 sq ft laboratory building for Analytical Sciences, 1897 Building. The fences which separately enclosed the Michigan Division manufacturing facility, generally to the south of Bay City Road, and the research area, generally to the north of Austin Street, are joined to enclose the area. There is no public access to 1602 Building. The establishment of a generally unpopulated greenbelt area around the Dow facility in Midland has been ongoing for a number of years, which is most visible along the northern and eastern boundaries of the Dow complex. There are some industrial-type business establishments along Jefferson Street to the west of the site. A small facility for the production of compressed air, used in the Dow Michigan Division plant, is situated at the northwest corner of Pershing and Austin streets, where Sullair, Inc., operates with a small number of employees. Since the last license renewal, a minor league baseball stadium, Dow Diamond, has been constructed just outside the northwest corner of the manufacturing site.

### B.1.1. Site Location and Description

The reactor is located within 1602 Building, a part of the Analytical Sciences of The Dow Chemical Company, in Midland, Michigan. This building is located within a security fence which surrounds the research facilities and the manufacturing plant of the Michigan Division. The building is a modern laboratory of fireproof construction with steel frame and concrete panel and concrete block walls, with approximately 25,000 square feet of laboratories, offices, and associated space. The minimum distance from the center of the pool to the security fence is 100 feet. There is no public access to the building.

Other buildings to the east of 1602 Building contain various Dow research laboratories, with the nearest building about 200 feet distant. None of these laboratories is expected to contribute in any way to hazards involved in the operation of the reactor. Several hundred feet to the southeast, the 1897 building houses the major portion the

Michigan Division Analytical Laboratories. This 150,000-sq ft structure contains state of the art analytical services. The area immediately adjacent to and outside the fence is zoned industrial and is largely owned by The Dow Chemical Company. Figure 1 is a map showing the reactor site and the immediately surrounding area.

The major residential section of the city of Midland lies to the North of the reactor site, with the nearest residence about 0.3 mile distant.

There are industrial business establishments along Jefferson Avenue and Austin Street to the west of the reactor site and a few residences to the west and north. For a distance of about one mile to the east the land is a generally unpopulated, open, industrial-type area with a few business buildings.

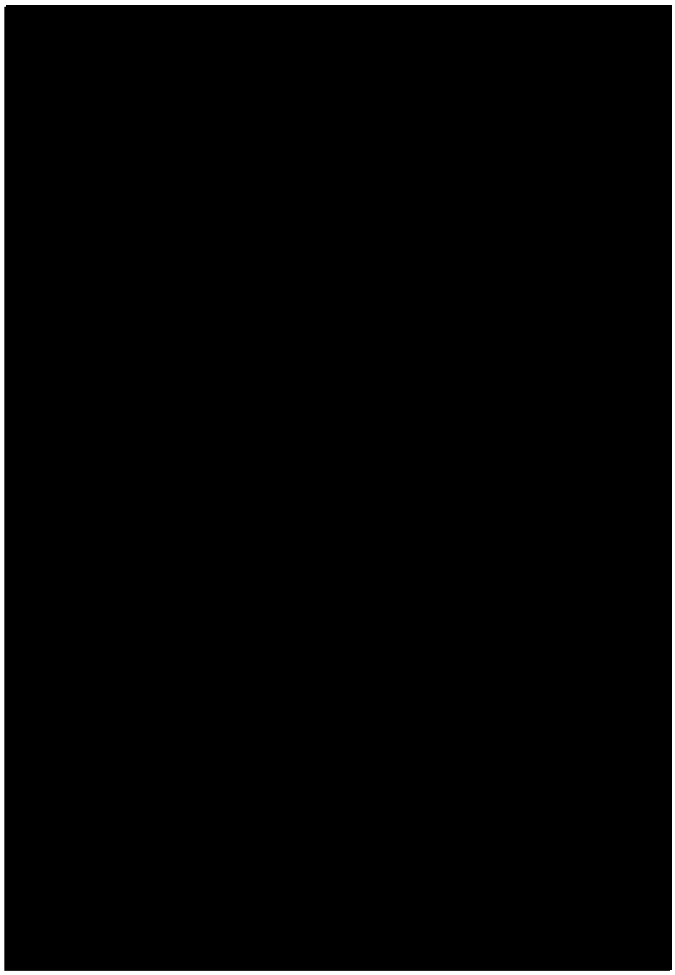

### B.1.2. Population Distribution

Based on the 2005 U.S. Census Midland Mi. population was 41,760 with a median age of 36.2. Approximately 65% of the population is considered to be living in families. The population is experiencing little growth from the 2000 U.S. Census which reported a population of 41,675. Midland is located in Midland County. The population distribution for the city is presented in Figure 2.

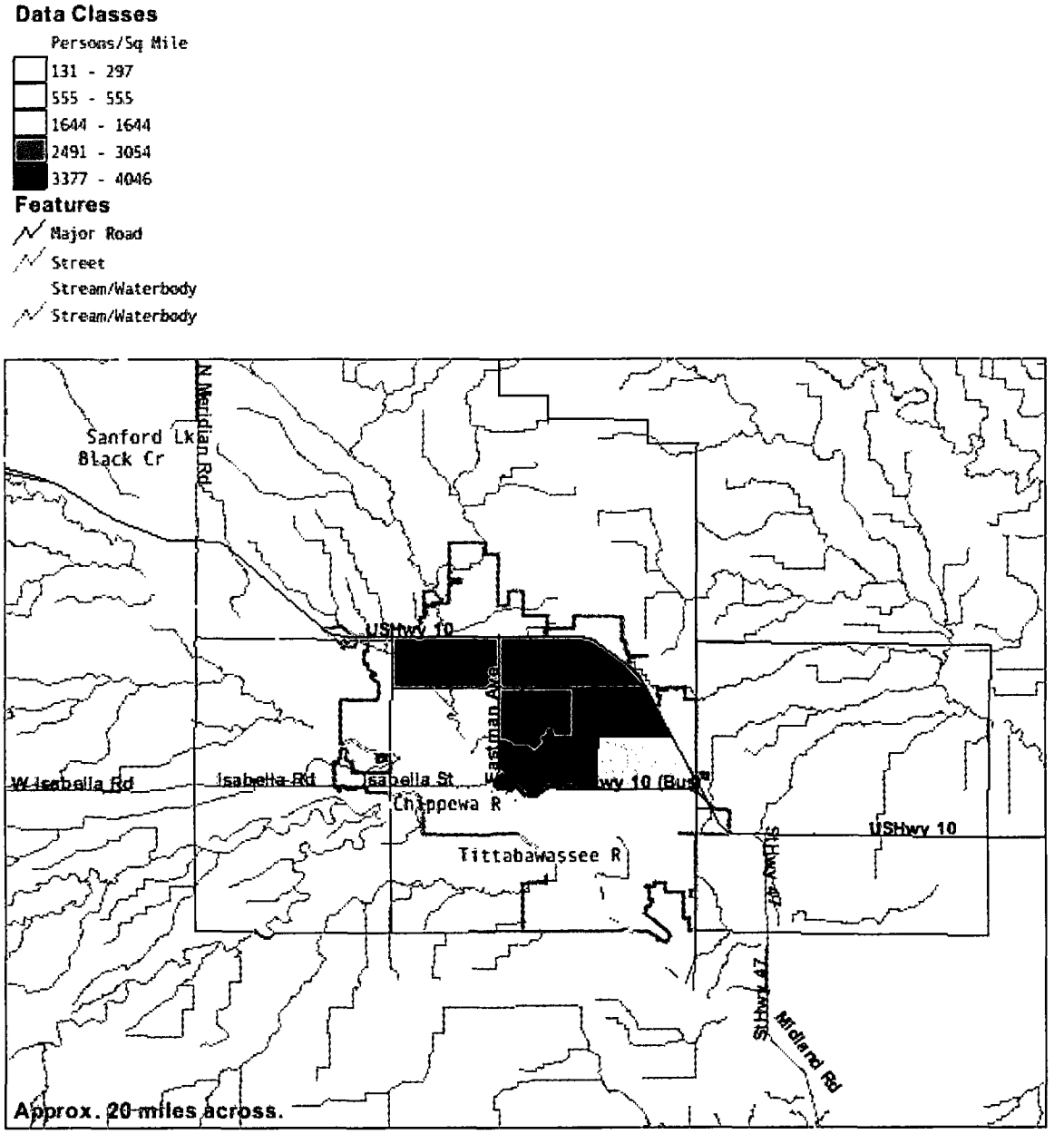


• Figure 2. Population distribution for Midland County

## B.2. Nearby Industrial, Transportation and Military Facilities

### B.2.1. Locations and Routes

The Dow TRIGA reactor is located within the Midland Operations fence line. Access to the Midland operations is restricted by manned grab gates. The majority of commodities used for the chemical operations are delivered by railcar. Large truck access is limited to a single gate. The reactor is not on a direct line from any road in the area. Data collected and maintained by the Michigan Department of Transportation (MDOT) documents the mean daily traffic volume as 9400 and 11100 for the nearest public roads with 550 identified as heavy trucks for these roads.

### B.2.2. Air Traffic

The Midland area has two airports: MBS international and Jack Barstow. The Jack Barstow Airport serves private planes, and runs a flight school. MBS international serves on average 29,000 passengers per month with a total passenger volume of fewer than 350,000. However, the air space above the Dow Michigan Operations site is restricted.

### B.2.3. Analysis of potential accidents at the facility

The Dow TRIGA Research reactor is located on a controlled access campus. All access to the campus is restricted by gates. There is no air traffic above the facility. Delivery of feed stock for the chemical plant is strictly controlled and is not routed along the nearby surface roads. The reactor core and well is all located below grade, in addition to being located in the interior of a building. Accidents may cause structural damage to the building but the core, and reactor well, are protected.

## B.3. Meteorology

Meteorological data for the site has been obtained using the database at Michigan State University. Thirty year precipitation and temperature data is summarized in Table 1.

• Table 1. Thirty year summary of monthly meteorological values for Midland Michigan

| Month | Total number of days | | | | | | | |
|---|---|---|---|---|---|---|---|---|
| | Precipitation in inches | | | Temperature | | | | |
| | ≥0.10 | ≥0.25 | ≥0.50 | ≥ 100 | ≥90 | ≤32 | ≤15 | ≤0 |
| January | 4 | 2 | 1 | 0 | 0 | 19 | 30 | 3 |
| February | 4 | 1 | 1 | 0 | 0 | 14 | 26 | 3 |
| March | 5 | 3 | 1 | 0 | 0 | 5 | 24 | * |
| April | 7 | 4 | 2 | 0 | 0 | * | 12 | 0 |
| May | 6 | 4 | 2 | 0 | 1 | 0 | 2 | 0 |
| June | 6 | 4 | 2 | * | 3 | 0 | * | 0 |
| July | 5 | 3 | 2 | * | 6 | 0 | 0 | 0 |
| August | 6 | 4 | 3 | 0 | 2 | 0 | 0 | 0 |
| September | 7 | 4 | 2 | 0 | 1 | 0 | * | 0 |
| October | 6 | 3 | 2 | 0 | 0 | 0 | 6 | 0 |
| November | 5 | 3 | 2 | 0 | 0 | 2 | 17 | 0 |
| December | 5 | 3 | 1 | 0 | 0 | 12 | 28 | 1 |

• * = less than one half

• Table. 2 Mean Annualized temperature and precipitation data

| | |
|---|---|
| Mean annual temperature | 48.0$^0$F |
| Coldest month (Jan) | 22.4$^0$F |
| Hottest month (July) | 72.0$^0$F |
| Days over 90$^0$F | 13 |
| Annual total precipitation | 30.7" |
| Annual snow fall | 35.3" |
| Wettest month (Sept.) | 3.87" |
| Driest month (Feb.) | 1.24" |

The history of tornadoes at the site indicates a very low probability of occurrence although the general area is susceptible to tornadoes and damaging winds.

### B.3.1. General and Local Climate

Michigan's climate is impacted by the Great Lakes. The lakes impact the amount of snowfall and number of sunny days. Snowfall can be heavy on extreme northern shore of Lake Superior and western shore of the lower peninsula of Lake Michigan. Warm water temperature in comparison to the air temperature increases moisture in the air causing the heavy snowfalls. The lower peninsula is subject to tornados and heavy thunderstorm activity in spring.

### B.3.2. Site Meteorology

Flooding occurred in Midland in September, 1986, following extremely heavy rains. The Tittabawassee River crested at over 34 feet, almost 5 feet higher than the previously recorded flood. Large areas of the city were flooded and subjected to backup of sewage. None of this affected the operation of the reactor, which is situated in an area well above the flood areas (Midland City, GIS program). During 1985, one tornado warning emergency took place at the site; a tornado was spotted in the southern portion of the county but there was no damage within the city. Wind data for 2003 through 2006 collated by Michigan Department Environmental Quality and collected at the MBS International airport indicate that the winds the wind is generally from the south southwest between 11 and 17 knots.

The following figures are the wind roses for the Midland/Bay City/ Saginaw area (MBS international airport)

Figure 3..

2003

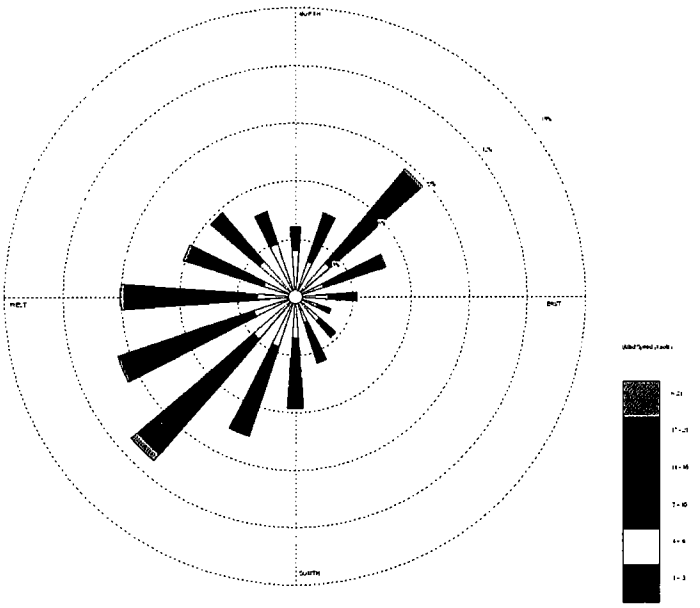

2004

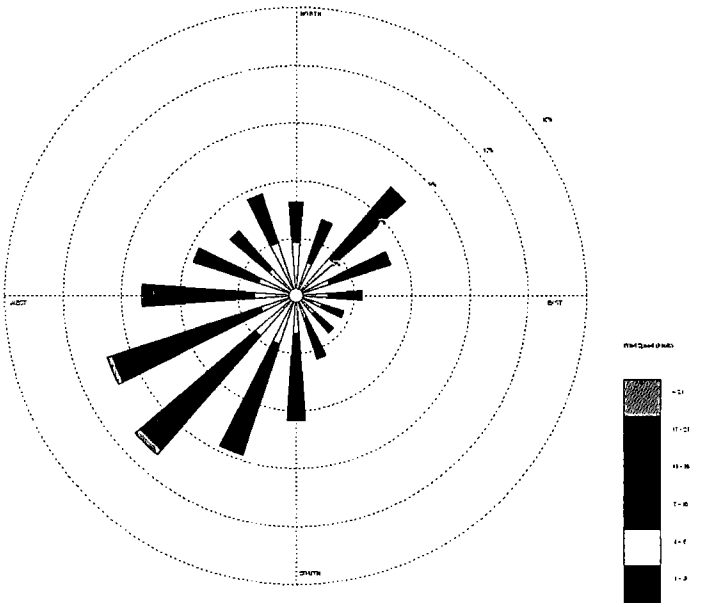

2005

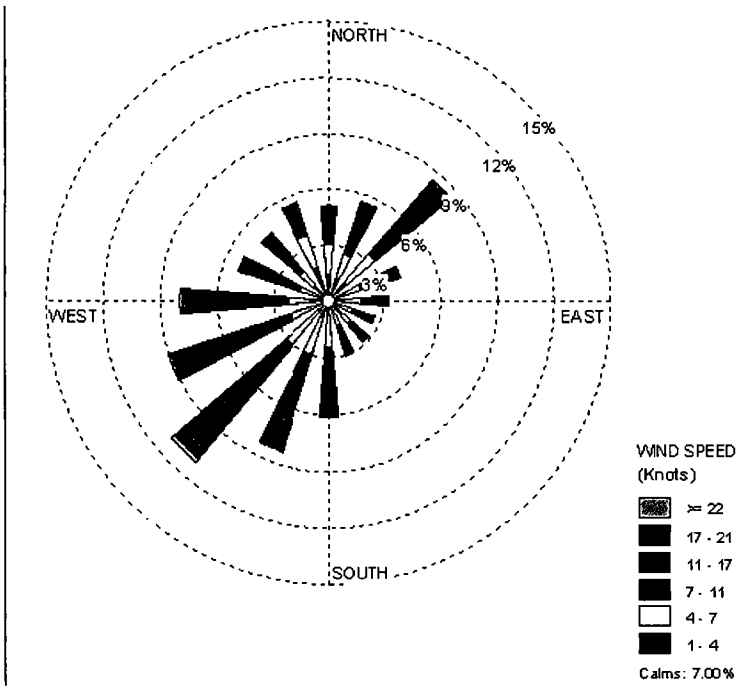
NORTH
15%
12%
9%
6%
3%
WEST
EAST
SOUTH
WIND SPEED
(Knots)
>= 22
17 - 21
11 - 17
7 - 11
4 - 7
1 - 4
Calms: 7.00%

2006

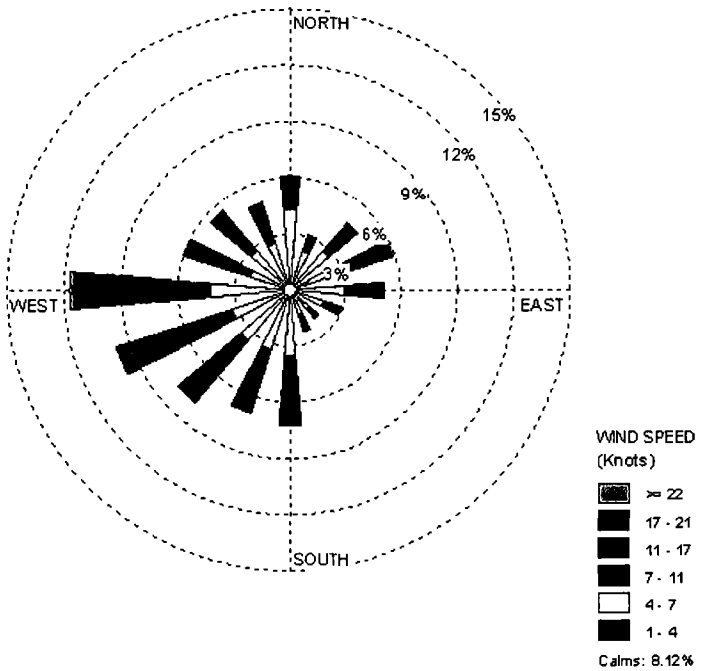


• Figure 3. Wind Rose 2003-2006 MBS Airport

## B.4. Hydrology

Surface drainage for the area is provided by the Tittabawassee River, which is source of cooling water for The Dow Chemical Company. The drinking water for the city of Midland is supplied by a pipeline from Lake Huron. The Tittabawassee River empties into Saginaw Bay via the Saginaw River, about 40 miles downstream from Midland, near which point Bay City extracts drinking water. Drinking water for Saginaw, about 25 miles downstream of Midland, is supplied from the same pipeline that supplies Midland. Based on the North American Vertical Data the altitude of the site is 635 ft with the ground water level ranging between 626 to 628 ft.

## B.5. Geology, Seismology, and Geotechnical Engineering

Glaciers and melt water shaped the geological and topographical features of Michigan. Prominent geological features of the area are the Michigan Basin and numerous lakes and rivers. There is comparatively little seismic activity both in frequency and magnitude.

### B.5.1. Regional Geology

The ground surface is composed of a glacial drift overburden to a depth of 180 to 200 feet. The drift is a mixture of sand, gravel, and clay. A consolidated sandstone stratum lies about 180 to 200 feet below the surface, rising to the east of Midland.

### B.5.2. Site Geology

The immediate area in which the reactor is sited consists of a layer of sand eight to nine feet thick underlain with heavy clay to a depth of more than forty-four feet. Ground water from the sand layer is drained by a tile around

the basement of the building at a depth of 15 feet. Water moves only very slowly in the clay and very little of the water reaching the drain tile is thought to come from the clay layer. The water table in this immediate area is at times a few feet from the surface. The drain tile around the building footings tends to lower this level. Over a period of several months during a summer period of unusually low rainfall it has been observed in an excavation that the water table goes down to the eight-foot depth. This is approximately the sand-clay interface. The ground water table ranges between 626 to 628 ft above sea level with 1602 bldg at 635 ft above sea level using the North American Vertical Datum NAVD 1988 as reference.

### B.5.3. Seismology

Michigan is included in the Central and Eastern United States (CEUS) region as defined by the United States Geologic Survey. The area has four finite fault sources. These sources are: The New Madrid Mo., Charleston S.C., Meers Okla., and Cheraw Colo. The data from these faults were used to constrain very large earthquake reoccurrence. Midland falls in a band between 0.3 and 0.4 spectral acceleration for a 2% exceedence in 50 years (Peterson, M.D. et al 2008). Very little earthquake activity has been recorded for the Midland area. A tremor in January 1986 went unnoticed by most of the population. There have been no major earthquakes in the state of Michigan. Recorded seismological activity for the state is given in table 3.

• Table 3. Seismological Activity centered around Midland Michigan from USGSNEIC 1973-present data base

Circle Center Point Latitude: 43.000N Longitude: 84.000W

| CAT | YEAR | MO | DA | ORIG TIME | LAT | LONG | DEP | MAGNITUDE | | IEFM | DTSVNWG | DIST NFPO km |
|---|---|---|---|---|---|---|---|---|---|---|---|---|
| Radius: 100.000 km | | | | | | | | | | | | |
| PDE | 1994 | 09 | 02 | 212306.52 | 42.80 | -84.60 | 5 | 3.50 | LgOTT | 5F | . ..... | 54 |
| Radius: 250.000 km | | | | | | | | | | | | |
| PDE | 1974 | 09 | 29 | 022617.10 | 41.24 | -83.36 | 1 | 3.00 | LgSLM | 3F | . ..... | 202 |
| PDE | 1976 | 02 | 02 | 211402 | 41.96 | -82.67 | 10 | 3.40 | LgOTT | .F | . ..... | 159 |
| PDE | 1980 | 08 | 20 | 093452.30 | 41.94 | -83.01 | 5 | 3.20 | UKGS | 4F | . ..... | 143 |
| PDE | 1981 | 09 | 05 | 054920 | 42.73 | -81.35 | 4 | 3.10 | LgOTT | .. | . ..... | 218 |
| PDE | 1984 | 01 | 14 | 201431.29 | 41.65 | -83.43 | 5 | 2.50 | MDAAM | 4F | . ..... | 157 |
| PDE | 1990 | 06 | 04 | 112647.06 | 41.10 | -83.64 | 5 | 2.50 | LgGS | 4F | . ..... | 213 |
| PDE | 1999 | 09 | 22 | 100222.29 | 41.83 | -81.48 | 18 | 2.80 | LgOTT | 3F | . ..... | 245 |
| PDE | 2006 | 01 | 13 | 153217.55 | 41.80 | -81.45 | 7 | 2.50 | LgOTT | .F | . ..... | 248 |
| PDE | 2007 | 04 | 12 | 220320.45 | 41.72 | -82.92 | 5 | 2.80 | LgOTT | .. | . ..... | 167 |
| Radius: 500.000 km | | | | | | | | | | | | |
| PDE | 1974 | 06 | 05 | 001640.40 | 38.60 | -84.77 | 15 | 3.20 | LgSLM | .. | . ..... | 492 |
| PDE | 1974 | 10 | 20 | 151355.10 | 39.10 | -81.59 | 11 | 3.40 | LgSLM | 5D | . ..... | 478 |
| PDE | 1974 | 11 | 25 | 233405.10 | 40.30 | -87.40 | | 2.40 | LgSLM | 2F | . ..... | 412 |
| PDE | 1975 | 02 | 16 | 232131.50 | 39.05 | -82.42 | 5 | 4.40 | mb GS | .F | . ..... | 458 |
| PDE | 1977 | 06 | 17 | 153947.30 | 40.71 | -84.58 | 5 | 3.20 | UKAAM | 6D | . ..... | 259 |
| PDE | 1978 | 03 | 05 | 232102 | 43.48 | -79.75 | 18 | 2.30 | UKOTT | .F | . ..... | 349 |
| PDE | 1981 | 08 | 28 | 105132 | 43.21 | -80.57 | 18 | 3.30 | LgOTT | .F | . ..... | 280 |
| PDE | 1983 | 01 | 22 | 074657.93 | 41.85 | -81.19 | 5 | 2.70 | LgGS | .. | . ..... | 263 |
| PDE | 1983 | 10 | 04 | 171840 | 43.44 | -79.79 | 2 | 3.10 | LgOTT | 4F | . ..... | 345 |
| PDE | 1984 | 06 | 20 | 141227 | 46.58 | -80.80 | 1 | 3.40 | LgOTT | .C | . ....R.. | 471 |
| PDE | 1984 | 06 | 20 | 161022 | 46.63 | -80.78 | 1 | 3.50 | LgOTT | .. | . ....R.. | 476 |

| | | | | | | | | | | | | | | |
|---|---|---|---|---|---|---|---|---|---|---|---|---|---|---|
| PDE | 1984 | 06 | 20 | 161817 | 46.53 | -80.80 | 1 | 3.30 | LgOTT | .. | . | ....R.. | | 466 |
| PDE | 1984 | 07 | 06 | 172452 | 46.53 | -81.17 | 1 | 4.40 | mb GS | .D | . | ..... | | 451 |
| PDE | 1984 | 07 | 28 | 233927.38 | 39.22 | -87.07 | 10 | 4.00 | LgSLM | 5F | . | ..... | | 492 |
| PDE | 1984 | 08 | 29 | 065056.49 | 39.37 | -87.22 | 10 | 3.20 | LgSLM | 5F | . | ..... | | 485 |
| PDE | 1984 | 12 | 17 | 093836 | 46.50 | -82.60 | 0 | 3.50 | LgOTT | .. | . | ....R.. | | 404 |
| PDE | 1985 | 09 | 09 | 220631.02 | 41.85 | -88.01 | 5 | 3.00 | LgGS | 5F | . | ..... | | 354 |
| PDE | 1986 | 01 | 31 | 164643.33 | 41.65 | -81.16 | 10 | 5.00 | mb GS | 6C | . | ..... | | 277 |
| PDE | 1986 | 02 | 07 | 183622.34 | 41.65 | -81.16 | 6 | 2.50 | LgGS | .F | . | ..... | | 278 |
| PDE | 1986 | 07 | 12 | 081937.95 | 40.54 | -84.37 | 10 | 4.50 | mb GS | 6D | . | ..... | | 275 |
| PDE | 1987 | 05 | 30 | 112918.30 | 46.54 | -80.99 | 1 | 3.50 | LgOTT | .. | . | ....E.. | | 459 |
| PDE | 1987 | 07 | 13 | 054917.43 | 41.90 | -80.77 | 5 | 3.80 | LgGS | 4F | . | ..... | | 292 |
| PDE | 1987 | 07 | 13 | 075212 | 41.90 | -80.80 | 5 | 3.00 | LgGS | .F | . | ..... | | 290 |
| PDE | 1987 | 07 | 13 | 130522 | 41.90 | -80.80 | 5 | 2.90 | LgGS | .F | . | ..... | | 290 |
| PDE | 1987 | 07 | 14 | 145110 | 41.90 | -80.80 | 5 | 2.80 | LgGS | .F | . | ..... | | 290 |
| PDE | 1987 | 07 | 16 | 044940 | 41.90 | -80.80 | 5 | 2.70 | LgGS | .F | . | ..... | | 290 |
| PDE | 1987 | 07 | 23 | 093228.50 | 43.49 | -79.47 | 6 | 3.40 | LgOTT | .F | . | ..... | | 371 |
| PDE | 1988 | 05 | 28 | 161828.12 | 39.75 | -81.61 | 0 | 3.40 | LgGS | 3F | . | ....E.. | | 412 |
| PDE | 1989 | 07 | 15 | 000802.64 | 38.61 | -83.57 | 10 | 3.10 | LgBLA | 5F | M | ..... | | 488 |
| PDE | 1989 | 08 | 05 | 210759.10 | 43.21 | -79.53 | 18 | 3.30 | LgOTT | .F | . | ..... | | 364 |
| PDE | 1990 | 04 | 17 | 102734.78 | 40.46 | -84.85 | 5 | 3.00 | LgGS | 4F | . | ..... | | 290 |
| PDE | 1990 | 12 | 17 | 052459.10 | 40.07 | -87.04 | 10 | 3.20 | MDSLM | 4F | . | ..... | | 412 |
| PDE | 1990 | 12 | 17 | 072248.50 | 41.95 | -80.12 | 5 | 2.50 | LgOTT | 3F | . | ..... | | 339 |
| PDE | 1990 | 12 | 20 | 140417.12 | 39.57 | -86.67 | 10 | 3.60 | LgBLA | 5F | . | ..... | | 441 |
| PDE | 1991 | 01 | 26 | 032122.61 | 41.54 | -81.45 | 5 | 3.40 | LgTUL | 5F | . | ..... | | 265 |
| PDE | 1992 | 03 | 15 | 061355.22 | 41.91 | -81.25 | 5 | 3.50 | LgGS | 4F | . | ..... | | 256 |
| PDE | 1993 | 10 | 16 | 063005.32 | 41.70 | -81.01 | 5 | 3.60 | LgOTT | 4F | . | ..... | | 285 |
| PDE | 1994 | 04 | 04 | 151444 | 40.40 | -84.40 | 5 | 2.90 | LgGS | .F | . | ..... | | 290 |
| PDE | 1995 | 02 | 19 | 125706 | 39.12 | -83.47 | 10 | 3.60 | LgOTT | 5F | . | ..... | | 433 |
| PDE | 1995 | 02 | 23 | 093213 | 41.87 | -80.83 | 5 | 2.90 | LgOTT | .F | . | ..... | | 289 |
| PDE | 1995 | 05 | 25 | 142232.69 | 42.99 | -78.83 | 5 | 3.00 | LgOTT | 4F | . | ..... | | 421 |
| PDE | 1996 | 12 | 16 | 015831.35 | 39.50 | -87.40 | 5 | 3.10 | LgGS | 5F | . | ..... | | 481 |
| PDE | 1998 | 03 | 09 | 050558 | 46.49 | -81.07 | 1 | 3.90 | mb GS | .. | . | ....R.. | | 451 |
| PDE | 1998 | 05 | 25 | 154702 | 46.46 | -81.17 | 1 | 3.90 | LgOTT | .F | . | ..... | | 444 |
| PDE | 1998 | 09 | 25 | 195252.07 | 41.49 | -80.39 | 5 | 5.20 | LgGS | 6D | M | ..... | | 341 |
| PDE | 1998 | 11 | 25 | 025506.07 | 41.07 | -82.40 | 5 | 2.70 | LgGS | .. | . | ..... | | 251 |
| PDE | 1998 | 12 | 25 | 133026 | 43.83 | -77.93 | 18 | 3.60 | LgOTT | .F | . | ..... | | 499 |
| PDE | 1999 | 09 | 02 | 161729.70 | 41.72 | -89.43 | 5 | 3.50 | LgGS | .F | . | ..... | | 469 |
| PDE | 1999 | 09 | 22 | 100222.29 | 41.83 | -81.48 | 18 | 2.80 | LgOTT | 3F | . | ..... | | 245 |
| PDE | 1999 | 11 | 26 | 223301.40 | 43.71 | -79.00 | 12 | 3.80 | LgOTT | .F | . | ..... | | 413 |
| PDE | 2000 | 04 | 14 | 035420 | 39.76 | -86.75 | 5 | 3.60 | LgSLM | .F | . | ..... | | 426 |
| PDE | 2000 | 05 | 24 | 102246.21 | 43.81 | -79.10 | 18 | 3.10 | LgOTT | .F | . | ..... | | 406 |
| PDE | 2000 | 08 | 07 | 020230.40 | 40.96 | -81.15 | 5 | 2.90 | LgGS | .F | . | ..... | | 327 |
| PDE | 2001 | 01 | 20 | 020507.54 | 41.88 | -80.77 | 5 | 2.60 | LgOTT | .F | . | ..... | | 293 |
| PDE | 2001 | 01 | 26 | 030320.06 | 41.94 | -80.80 | 5 | 4.40 | LgOTT | 5F | . | ..... | | 287 |
| PDE | 2001 | 06 | 03 | 223646.46 | 41.90 | -80.77 | 5 | 3.40 | LgOTT | 3F | . | ..... | | 292 |
| PDE | 2002 | 04 | 28 | 000720.90 | 41.85 | -81.37 | 5 | 2.70 | LgOGSO | .F | . | ..... | | 251 |
| PDE | 2002 | 05 | 06 | 222651.50 | 38.95 | -81.89 | 5 | 2.80 | MDBLA | .. | . | ..... | | 483 |
| PDE | 2003 | 06 | 30 | 192117.20 | 41.80 | -81.20 | 4 | 3.60 | LgOTT | 4F | . | ..... | | 266 |
| PDE | 2003 | 07 | 17 | 004410 | 41.86 | -80.76 | 2 | 2.50 | LgOGSO | .F | . | ..... | | 295 |
| PDE | 2004 | 01 | 30 | 121004.14 | 40.67 | -84.65 | 5 | 2.50 | LgOGSO | .F | . | ..... | | 264 |
| PDE | 2004 | 03 | 14 | 050510.29 | 41.77 | -81.24 | 5 | 2.40 | LgOGSO | .F | . | ..... | | 265 |
| PDE | 2004 | 06 | 28 | 061052.17 | 41.46 | -88.90 | 10 | 4.20 | MwSLM | 5F | M | ..... | | 439 |
| PDE | 2004 | 06 | 30 | 040314.58 | 41.78 | -81.08 | 5 | 3.30 | LgOGSO | 3F | . | ..... | | 275 |
| PDE | 2004 | 08 | 04 | 235526.61 | 43.69 | -78.25 | 5 | 3.20 | MwSLM | .. | M | ..... | | 472 |
| PDE | 2004 | 09 | 12 | 130519.11 | 39.59 | -85.80 | 6 | 3.80 | MwSLM | 4F | M | ..... | | 406 |
| PDE | 2005 | 03 | 13 | 040204.72 | 40.67 | -84.62 | 5 | 2.20 | LgOGSO | .F | . | ..... | | 263 |
| PDE | 2005 | 03 | 13 | 170814 | 46.54 | -80.98 | 18 | 3.60 | LgOTT | .F | . | ..... | | 460 |

| | | | | | | | | | | | | | | |
|---|---|---|---|---|---|---|---|---|---|---|---|---|---|---|
| PDE | 2005 | 09 | 21 | 033631.86 | 46.54 | -80.98 | 0 | 2.90 | LgOTT | .F | . | ..... | | 460 |
| PDE | 2005 | 10 | 20 | 211628.75 | 44.68 | -80.48 | 11 | 4.20 | LgOTT | 4F | . | ..... | | 338 |
| PDE | 2005 | 11 | 13 | 110215.33 | 41.82 | -81.18 | 5 | 2.40 | LgOTT | .F | . | ..... | | 266 |
| PDE | 2006 | 01 | 06 | 030203.27 | 41.77 | -81.45 | 5 | 2.80 | LgOTT | .F | . | ..... | | 250 |
| PDE | 2006 | 01 | 13 | 153217.55 | 41.80 | -81.45 | 7 | 2.50 | LgOTT | .F | . | ..... | | 248 |
| PDE | 2006 | 02 | 10 | 133042 | 41.75 | -81.41 | 5 | 2.60 | LgOGSO | .F | . | ..... | | 254 |
| PDE | 2006 | 03 | 11 | 122715.60 | 41.78 | -81.39 | 5 | 3.10 | LgOGSO | .F | . | ..... | | 253 |
| PDE | 2006 | 05 | 04 | 145015 | 43.48 | -79.71 | 4 | 2.70 | LgOTT | .F | . | ..... | | 352 |
| PDE | 2006 | 05 | 12 | 015111.14 | 40.74 | -84.08 | 5 | 2.80 | LgOGSO | .F | . | ..... | | 251 |
| PDE | 2006 | 06 | 20 | 201118.54 | 41.84 | -81.23 | 5 | 3.80 | LgOGSO | 4F | M | ..... | | 261 |
| PDE | 2006 | 08 | 15 | 060854.94 | 40.71 | -84.11 | 5 | 2.50 | LgOGSO | 3F | . | ..... | | 254 |
| PDE | 2006 | 11 | 29 | 072255.11 | 46.48 | -81.17 | 1 | 4.10 | LgOTT | 3F | . | ..... | | 447 |
| PDE | 2006 | 11 | 29 | 073817.16 | 46.47 | -81.21 | 1 | 3.10 | LgOTT | .. | . | ..... | | 444 |
| PDE | 2007 | 01 | 03 | 090831.60 | 41.73 | -80.18 | 5 | 2.50 | LgOTT | .. | . | ..... | | 344 |
| PDE | 2007 | 01 | 20 | 172000.87 | 42.64 | -78.80 | 8 | 2.60 | LgOTT | .. | . | ..... | | 427 |
| PDE | 2007 | 03 | 12 | 231816.41 | 41.28 | -81.38 | 5 | 3.70 | LgOTT | 4F | . | ..... | | 288 |
| PDE | 2007 | 07 | 19 | 170758.27 | 43.71 | -78.17 | 5 | 3.10 | LgOTT | .. | . | ..... | | 479 |
| PDE | 2007 | 09 | 28 | 084605.81 | 41.99 | -80.60 | 5 | 2.80 | LgOTT | .F | . | ..... | | 301 |
| PDE | 2007 | 10 | 17 | 200409.74 | 41.75 | -81.42 | 5 | 3.40 | LgOTT | 3F | . | ..... | | 253 |
| PDE-W | 2007 | 12 | 13 | 032924 | 42.79 | -78.21 | 7 | 2.60 | MDPAL | .. | . | ..... | | 473 |
| PDE-W | 2008 | 01 | 09 | 013446.70 | 41.72 | -81.43 | 5 | 3.10 | LgOGSO | 3F | . | ..... | | 254 |
| PDE-W | 2008 | 03 | 08 | 114844.10 | 43.03 | -78.57 | 6 | 2.70 | MDPAL | 3F | . | ..... | | 442 |

PDE - probable design earthquake Lg- waves which travel through the continental surface

### B.5.4. Maximum earthquake potential

Maximum earthquake potential as defined by the USGS for the CEUS is between 6.7 and 7.7 based on the stable continental region. Midland does fall with in the region but is placed in lower hazard category. The data base indicates the maximum earthquake within a 500 km radius was a magnitude 5.2 recorded in September 1998, 341 km from Midland. The vast majority of the seismic activity is less than 4.0 and located further than 50 km from the site.

### B.5.5. Vibratory Ground Motion

As stated previously, Midland falls in the band between 0.3 and 0.4 spectral acceleration for a 2% exceedence in 50 years.

### B.5.6. Surface faulting

There is no evidence of surface faulting near the reactor site.

### B.5.7. Liquefaction Potential

Liquefaction potential is based on soil conditions and water table. Several areas of the US have been mapped for liquefaction potential based on priority. Michigan has not been mapped, based on the low probability of earthquake the liquefaction potential is negligible.

## B.6. Bibliography

Petersen, Mark D., Frankel, Arthur D., Harmsen, Stephen C., Mueller, Charles S., Haller, Kathleen M., Wheeler, Russell L., Wesson, Robert L., Zeng, Yuehua, Boyd, Oliver S., Perkins, David M., Luco, Nicolas, Field, Edward H., Wills, Chris J., and Rukstales, Kenneth S., 2008, Documentation for the 2008 Update of the United States National Seismic Hazard Maps: U.S. Geological Survey Open-File Report 2008–1128, 61 p.

http://apps.michigan.gov/tmis/definitions.aspx#aadt ( traffic patterns)

http://neic.usgs.gov/neis/epic/epic_circ.html (earthquake data)

http://mdotwas1.mdot.state.mi.us/public/airportstats/srchpic2.cfm?syr=2007&rtype=9 (air traffic)

http://climate.geo.msu.edu/mi-map.html (weather data)

http://www.midland-mi.org/government/departments/is/gis/images/map_gallery/CityMap_Floodplain.jpg

http://www.deq.state.mi.us/documents/deq-aqd-mm-met_support.pdf (wind direction and speed)

http://www.ngs.noaa.gov/

## C. DESIGN AND STRUCTURES, SYSTEM AND COMPONENTS

### C.1. Design Criteria

The history of weather conditions, seismic events and the geology of the area is described in section B of this Safety Analysis Report. These descriptions of normal and extreme conditions give an indication of the relative stability of the structures and their ability to maintain the integrity necessary for the operation of the reactor facility. In addition, the policy of The Dow Chemical Company to maintain equipment and structures in a safe and workable condition, as evidenced throughout the history of this facility, should be sufficient to ensure that any problems that do occur through accident, normal wear and tear, or natural or human-induced occurrences will be detected and repaired in a manner that will enable the facility to maintain a safe condition.

### C.2. Meteorological Damage

Building 1602 that houses the research reactor is designed and built to withstand the weather extremes. There are no unreviewed safety conditions regarding the building design.

### C.3. Water Damage

Building 1602 that houses the research reactor is designed and built above the 100 year flood plain. There are no unreviewed safety conditions regarding the building design.

### C.4. Seismic Damage

Building 1602 that houses the research reactor is designed and built to withstand the seismic activity predicted for the region. There are no unreviewed safety conditions regarding the building design.

### C.5. Systems and Components

The system and components are passively designed to place the reactor in a safe, subcritical configuration as a result of the meteorological and seismic conditions of the area.

# D. REACTOR DESCRIPTION

## D.1. Summary Description

• Table 4. Technical and Nuclear Data Summary

| | |
|---|---|
| **CORE** | |
| Fuel-moderator material | 8 wt% uranium, 91 wt% zirconium, 1 wt% hydrogen |
| Uranium enrichment | <20% 235-U |
| Fuel element dimensions | [redacted] |
| Cladding | 0.030 in (aluminum)<br>0.020 in (stainless steel) |
| Active lattice dimensions | 14 in diameter<br>15 in height |
| **CORE LOADING** | |
| Fuel-moderator | up to 78 elements |
| Graphite | up to 9 elements |
| 235-U content | [redacted] |
| βeff | 0.0070 δk/k |
| Neutron source | Am-Be, 2 Ci |
| **REFLECTOR** | |
| Material | GraphiteTorus |
| A. Outside the core | Aluminum |
| Cladding | 22 in |
| Height | 18 in |
| Inside diameter | 42 in |
| Outside diameter | |

B. In the core - encapsulated within fuel elements
1.47 in dia. x 3.50 in high plugs at each end of the fuel-moderator rod

C. In the core - up to nine dummy fuel elements
1.47 in dia x 22 in high rods

| | | |
|---|---|---|
| **STRUCTURE** | | |
| Aluminum reactor tank | 6.5 ft I.D. | 21.5 ft deep |

| | |
|---|---|
| **SHEILDING** | |
| Radial | surrounding water, earth and concrete |
| Vertical | water, 16 ft above the top of the core |

## EXPERIMENTAL AND IRRADIATION FACILITIES

| | |
|---|---|
| Rotary specimen rack | 40 position rack located in a niche in the graphite reflector |
| Pneumatic transfer tube | Terminal located in the core |
| Central Thimble | Located in the center of the core |
| Reflector region | In the water above and around the graphite reflector |
| Empty element | Located in the core |
| CONTROL | |
| Control Rods | 3 boron carbide/ aluminum oxide |
| Drives | Rack and pinion |
| Maximum reactivity insertion rate allowed | $0.21 |

## THERMAL CHARACTERISTICS

| | |
|---|---|
| Power, steady state, maximum | 300 kW |
| Core cooling | Natural convection of water |
| INSTRUMENTATION | |
| Log and period channel | 1 fission chamber |
| Linear power channel | 2 ion chambers |
| Water radioactivity monitor | 1 Geiger-Mueller |
| Water temperature monitor | 2 thermocouples |
| Water conductivity | 1 probe |
| NUCLEAR CHARACTERISTICS | |
| Neutron flux | 300 kW operation |
| average in core | $5 \times 10^{12}$ n/cm$^2$ sec |
| rotary rack | $1.5 \times 10^{12}$ n/cm$^2$ sec |
| central thimble | $1.5 \times 10^{13}$ n/cm$^2$ sec |
| Maximum excess reactivity | $3.00 |
| Total worth of control rods | $6.60 |
| Prompt temperature of coefficient at 50 C | -$0.017/°C |
| Void coefficient of reactivity | -$0.14/(1% void) |
| Prompt neutron lifetime | $6.0 \times 10^{-5}$ sec |

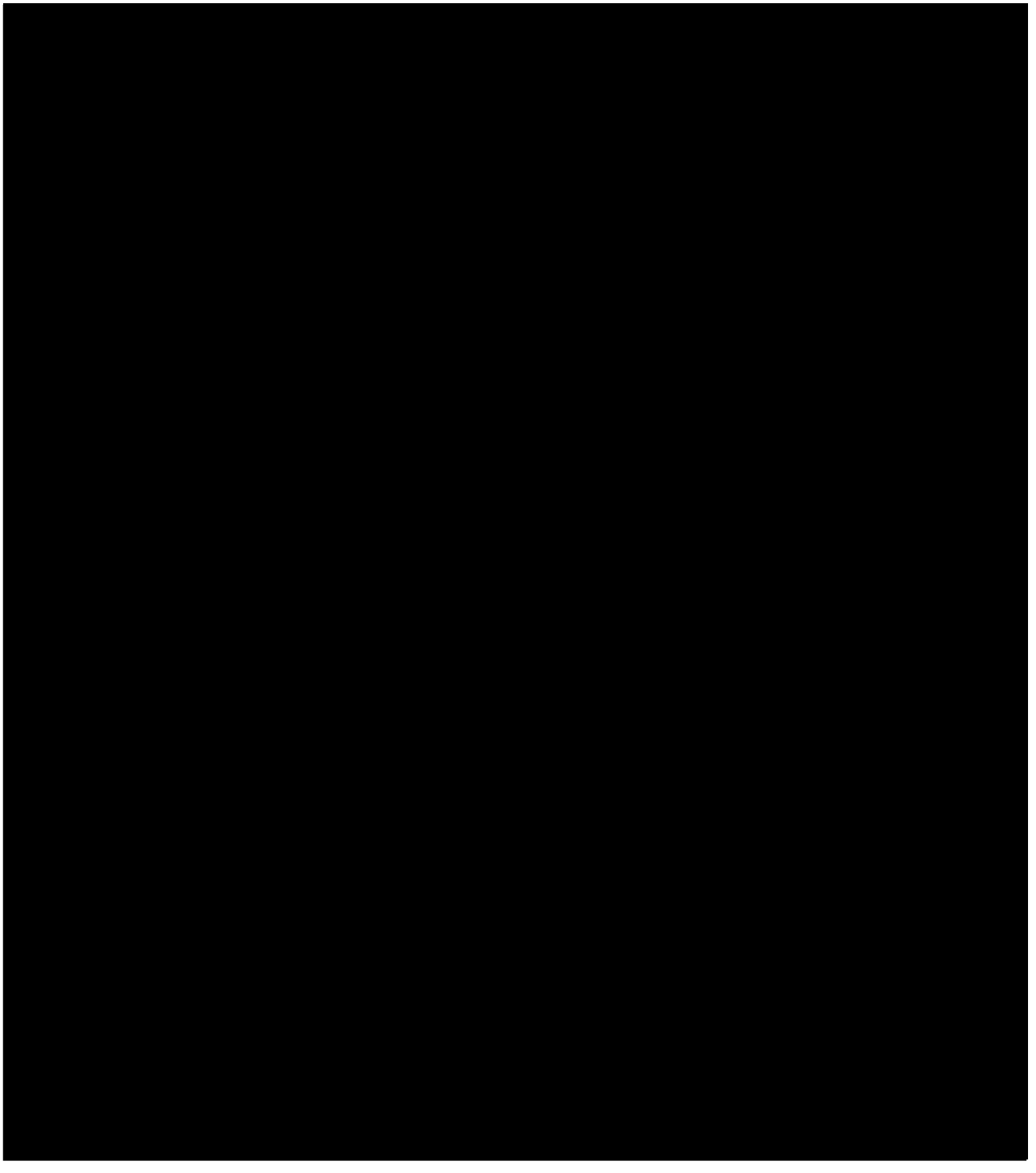

• Figure 4. Cutaway View of the pool and core

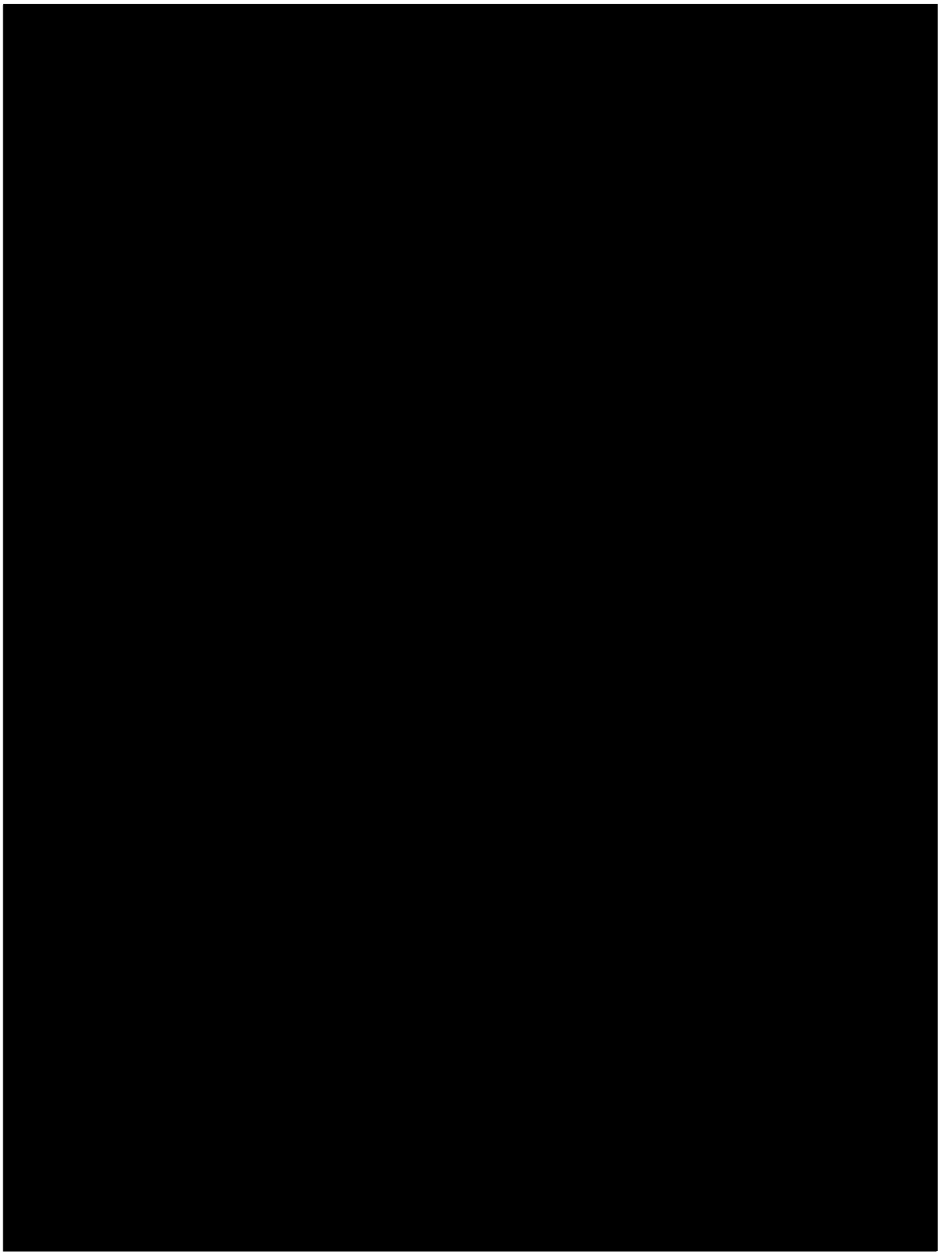

• Figure 5. TRIGA Fuel element

## D.2. Reactor Core

The reactor core is shown schematically in Figure D.1.1. The core is a right circular cylinder and consists of a lattice of cylindrical fuel-moderator elements, graphite dummy elements, control rods, a neutron source, and sample irradiation facilities, all immersed in the water.

### D.2.1. Fuel-moderator elements

The fuel-moderator element is shown in Figure 5. The elements are spaced so that water occupies approximately one-third of the core volume. This fuel-to-moderator ratio in the core was selected because calculations show this to give very nearly the minimum critical mass. The required reactivity will be provided by up to 78 fuel elements. The unused positions are occupied by dummy fuel elements of the same dimensions and construction as the fuel elements, but containing graphite moderator.

The fuel is a homogeneous mixture of uranium-zirconium hydride alloy containing about 8% by weight of uranium enriched to approximately 20% in 235-U. Each standard fuel element contains about [redacted] of 235-U. The hydrogen to zirconium atomic ratio is about 1 for the aluminum element, about 1.8 for the stainless-steel clad elements. Graphite plugs in each end of the fuel elements form the top and bottom of the core reflector.

The characteristics of the ZrH fuel used in the TRIGA fuel elements are described in detail in the report "The U-ZrH Alloy: Its Properties and Use in TRIGA Fuel", M. Tx Simnad, General Atomic Company Report E-117-833 (1980).

### D.2.2. Control Rods and Drives

Three control rods containing a mixture of boron carbide and aluminum oxide move in perforated aluminum guide tubes. Each control rod is sealed in an aluminum tube. The upper end of the control rod screws into an extension tube from the control rod drive assembly. The lower end of the tube is cone-shaped to reduce water resistance when the control rod assembly is dropped into the core during a scram. The control rods are approximately 20 inches long; the regulating rod is 7/8 in outside diameter, while the shim and safety rods are 1.25 in outside diameter. The vertical travel is approximately 15 inches.

The safety rod, which is completely out of the core during normal operation, and the shim rod are each worth approximately $2.75. The regulating rod is worth approximately $1.00. The maximum reactivity insertion rate by any rod withdrawal is approximately $0.093 per second.

The control rod drive mechanism, mounted on the bridge assembly, consists of a motor and reduction gear driving a rack and pinion. A multi-turn rheostat connected to the pinion generates the position indication signal. Each control rod has an extension tube which extends to a dashpot below the surface of the water. The dashpot and control rod assembly are connected to the rack through an electromagnet and armature. In the event of a power failure or scram the control rod magnet is de-energized and the rod falls into the core. The rod drive motor is nonsynchronous, single-phase and instantly reversible. It will insert or withdraw the control rod at a rate of approximately 20 inches per minute. Electrical dynamics and static braking on the motor are used for fast stops.

Limit switches mounted on the drive assembly indicate the "up" and "down" positions of the magnets, the "down" position of the rod, and magnet contact. The complete drive assembly is enclosed in an aluminum can.

### D.2.3. Neutron Moderator and Reflector

The core lattice is surrounded by a ring of graphite 12 inches thick, 18 inches inside diameter and 22 inches high. The graphite is encased in a welded aluminum can to prevent water penetration. A well in the top of the graphite reflector contains a rotary specimen rack. The well is aluminum-lined, the lining being an integral part of the aluminum reflector can. The rotary specimen rack is a self-contained unit and does not penetrate the sealed reflector assembly at any point. The reflector assembly rests upon the reflector platform and provides the support for the two grid plates.

Graphite plugs, each 1.47 in diameter x 3.5 in high, are sealed within each fuel element, one at each end of the fuel-moderator material. These plugs serve as reflectors at the top and the bottom of the core.

Empty core lattice positions in the E- and F-rings contain dummy fuel elements, of the same outside dimensions as the fuel elements, containing [redacted] long graphite rods. These graphite rods serve as neutron reflectors.

Of all the graphite in the reactor, the small plugs encapsulated within each of the fuel elements are subjected to the greatest neutron fluence, and are thus the greatest source of stored energy (Wigner energy).

This stored energy in the graphite in research reactors is the subject of a generic study, NUREG/CR-2079. Although there exists some controversy about the calculations used for this study, the findings can provide some general guidance for the evaluation of possible hazards involved in operation of the Dow TRIGA Research Reactor.

Given the value of stored energy quoted in NUREG/CR-2079, five calories per gram stored in the graphite of an Argonaut-type reactor, and assuming that the TRIGA reactor graphite will have similar energy storage, the adiabatic temperature rise of the graphite would be several tens of degrees Celsius if the energy is released quickly. Even if the stored energy were to be higher than that calculated by an order of magnitude the adiabatic temperature rise still would not be sufficient to damage the cladding of the fuel element, and of course, considering the relative masses of the graphite, the cladding, the fuel-moderator, and the coolant outside the cladding, the actual temperature rise would be much less than the predicted adiabatic temperature rise.

### D.2.4. Neutron Start up Source

The neutron source holder is of the same general size and dimensions as a fuel element and can thus be placed in any vacant location in the core. The source is located at the center line of the source holder element. The neutron source consists of a [redacted] 241-Am source intimately mixed with beryllium powder, encapsulated. This source provides sufficient neutrons for safe and reliable start-up of the reactor.

### D.2.5. Core support structure

The fuel elements, graphite elements, control rods, and neutron source are accurately positioned into a lattice by means of two aluminum grid plates. The bottom plate is ¾ inch thick with holes to receive the end fixtures of the elements which rest on the lower grid plate and are positioned by the pin on the lower end of the element. The top grid plate is also ¾ inch thick and has 1.5-inch diameter holes. The top plate does not support the weight of the elements but serves to position the elements and permit their withdrawal from the core.

The core is cooled by natural convection of water which flows upward through the core. The lower grid plate has 36 holes for water passage. The water can pass through the top grid plate by means of the gap between the triangular section of the fuel element and the round grid hole.

## D.3. Reactor Tank or Pool

The reactor was installed near the bottom of a cylindrical pit about 21.5 ft deep and 6.5 ft diameter (Figure 4). The pit was lined with an aluminum tank 0.25 in thick, which was wrapped on the outside with three layers of pitch and felt to retard corrosion of the aluminum. This liner is contained in a poured concrete shell three feet thick which itself is contained in a corrugated steel shell 24 feet deep. The aluminum liner is placed on a concrete pad about 3.5 ft thick. The well is filled with deionized water which serves as a biological shield, a moderator, and a coolant. There are no penetrations of the reactor tank; coolant pipes enter the tank from the top.

## D.4. Biological Shield

The water in the pool serves as biological shield, coolant, and moderator. Restrictions have been placed on certain attributes of the water in order to ensure that it will serve its proper functions and in order to detect early signs of certain malfunctions of the reactor.

The conductivity of the water must be controlled at such a level as to prevent corrosion of the components of the reactor and to minimize the activation of soluble impurities which could lead to unacceptable radiation exposures of personnel. Experience with many pool-type reactors has shown that a requirement that the conductivity not exceed 5 μmhos/cm, averaged over one month, provides adequate protection. This requirement is easily achievable with the ion exchange bed described in the coolant loop.

The radioactivity level of the pool water must be such that there are no unacceptable radiation exposures of personnel. A requirement that the radioactivity level of the pool water not exceed 0.1 μCi/mL provides adequate assurance of safety. Events such as failure of fuel element cladding or the failure of an experiment could lead to a discharge of radioactive material to the water of the pool, as could an increase of dissolved materials. The same instrumentation which provides assurance that the personnel are not exposed to unacceptable amounts of radiation also serves as a diagnostic tool for the detection of certain failures.

The core of the reactor remains highly radioactive even though the reactor is not in operation; when the reactor is in operation the radiation from the core is even more intense. It is necessary to maintain a level of water which is adequate to reduce the radiation from the core to acceptable levels during operation of the reactor. For this reason it is a requirement that the level of water must be at least 15 feet over the top of the core. Experience has shown that this level of water is adequate to perform the functions of biological shield and coolant.

A portion of the water from the pool is purified by passage through a column containing a mixed-bed ion-exchange material. In order to prevent degradation of the ion exchange material the temperature of the water must be held below a given limit. Discussions of the properties of ion exchange resins with experts from the Dow Chemical Company, which makes and markets ion-exchange materials used for the purification of water used in nuclear power plants, among other applications, indicate that the resin can safely sustain a temperature of 60 C, and that regeneration of such resins in the field is usually accomplished using reagents at much higher temperatures. For this reason the bulk temperature of the pool water shall not exceed 60 C while the reactor is operating. This provides adequate cooling capability and still prevents degradation of the resin.

## D.5. Core Physics - Design Bases

The physics of the reactor has been studied in considerable detail on a critical assembly mock-up as well as on the operating prototype. Core characteristics are listed in the Table 4.

### D.5.1. Critical Mass

The Dow TRIGA research reactor achieved criticality, during the most recent criticality experiment on December 16, 1980, with all control rods fully withdrawn, with 72 fuel elements, corresponding to a critical mass of about [redacted] of 235-U.

### D.5.2. Void Coefficient

The void coefficient should be very similar to the values obtained on the critical assembly, which were measured to be -$0.21 per 1% water void at 23 degrees C in the central region of the core and +$0.057 per 1% water void at 23 degrees C at the core-reflector interface, where there is a region of graphite-loaded dummy elements. The core average value was approximately -$0.14 per 1% water void, which agrees with the calculations.

Production or collapse of a void during operation of the reactor would affect the reactivity, but considering that the reactor is similar to others which can be pulsed by the addition of several dollars of reactivity within milliseconds, such an event would not produce conditions that would damage the fuel.

### D.5.3. Moderating Properties of Zirconium Hydride

Experiments performed by General Atomic personnel at Brookhaven National Laboratory have shown that zirconium hydride has very unusual moderating properties for slow neutrons. The results of these experiments can be explained by assuming that the hydrogen-atom lattice vibrations can be described by an Einstein model with a characteristic energy by = 0.130 eV. This description is consistent with the theory that the hydrogen atom

occupies a lattice site at the center of a regular tetrahedron of zirconium atoms. The basic consequences of the model, which have been experimentally verified, are that

1. Neutrons with energies of less than hv cannot lose energy in collisions with zirconium hydride.

2. A slow neutron can gain energy equal to by in a collision with zirconium hydride with a probability proportional to exp(-hv/kT), which increases very rapidly with temperature.

Since hv >> kT it has been found that zirconium hydride is not effective in thermalizing neutrons but that it can speed up neutrons already thermalized by water by transferring to them a quantum of energy hv.

### D.5.4. Temperature Coefficient

The fuel temperature coefficient of the TRIGA reactor has been experimentally demonstrated to be -$0.017 per degree C rise in average fuel temperature. The temperature coefficient associated with heating the reactor coolant is extremely small. The total reactivity contribution due to this latter coefficient over the range of 10 to 60 degrees C is less than $0.01. The operational characteristics of the reactor are therefore primarily determined by the extremely large prompt negative temperature coefficient. The experiments performed to determine this temperature coefficient demonstrate that it is a prompt coefficient and that it is nearly constant over the power range from 0 to 1.4 Mw. This corresponds to maximum fuel operating temperatures from ambient to greater than 500 degrees C. At a power level of 300 kW, the maximum fuel temperature is approximately 150 degrees C.

### D.5.5. Reactivity Associated with Experimental Facilities are:

1. The rotary specimen rack fully "poisoned" is worth -$0.21.

2. The pneumatic tube system, located in the outside ring of the core, when fully "poisoned" is worth -$0.20.

3. A fuel element replacing the central thimble adds about $2.14. A control rod in the same position is worth about -$5.70.

4. The reactivity effect associated with replacing a void in the central thimble with water is approximately +$0.057.

5. All other locations (excluding fuel positions) are outside the reflector and contribute only a trivial amount of reactivity.

6. Extra elements added to the periphery of the core replacing graphite dummy elements would be worth about +$0.57 each.

# E. REACTOR COOLANT SYSTEM

## E.1. Summary Description

The reactor is cooled by natural convection of the pool water. The secondary cooling system consists of a pump, cartridge filter, mixed-bed ion exchange resin demineralizer, flow meter and heat exchanger connected by aluminum piping and valves as shown in Figure 6. There are two heat rejection systems in place 1. Huron system once through water to water and SRX -1 water to glycol to R-134A. The heat rejections systems can be operated independently or in tandem. The Huron System is rated at 100 kW and The SRX-1 is rated at 1MW.

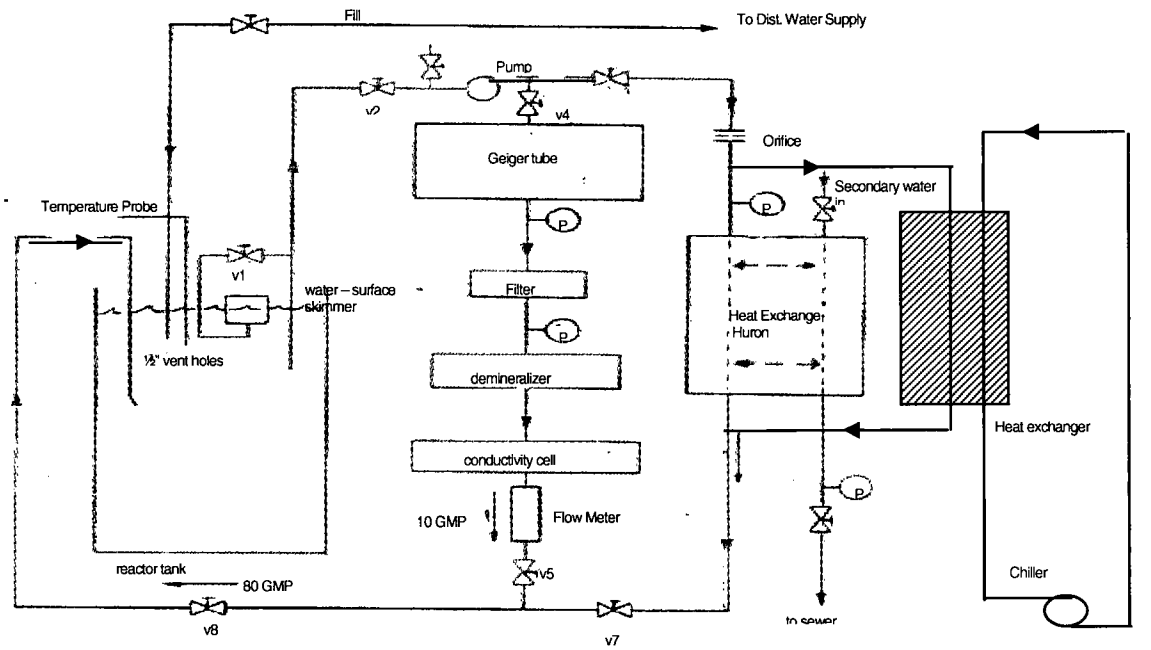


• Figure 6. Reactor Coolant System

## E.2. Reactor Water Cooling and Purification System

The core is located in a tank containing 5000 gallons of distilled water. The core is cooled by natural convection of the pool water. The lower grid plate has holes to allow flow through the core. Water passes through the small gaps between the fuel and grid plate. The convective current of water is the primary coolant system. The reactor is not operated continuously. The pool water cools over nights and weekends.

The water purification system serves three functions:

1. Maintains low electrical conductivity of the water to minimize corrosion of all reactor components, particularly the fuel-element cladding.

2. Reduces radioactivity in the water by removing nearly all particulate materials and ions in solution.

3. Maintains the optical transparency of the water and avoids buildup of algae which would make it impossible to see the core.

To maintain permissible limits of electrical conductivity, (5 μmhos –average over one month) the water-treatment system should be operated continuously regardless of whether the reactor is in operation. The water going to the demineralizer should not exceed a temperature of 60°C since the resin beads break down above that temperature.

The water purification system consists principally of a fiber cartridge filter, a mixed-bed demineralizer, and a flow meter, all connected by suitable pipes and valves. The intake of the water purification system is provided with a surface skimmer which preferentially takes the surface water off the pool into the demineralizer and filter system. By use of this skimmer the reactor pool surface is kept clean of dust, and buildup of activity due to dust particles is minimized.

Part of the water purification system is a Water Monitor Box. This box is equipped with a Geiger tube monitor which measures the radioactivity in the water. The latter is to be kept below 0.1 microcuries per milliliter. A circuit connected to this Geiger tube triggers an alarm whenever the radioactivity exceeds 0.05 microcuries per milliliter. The water monitor vessel precedes the filter and ion-exchange purification portion of the system. Readout from the water radiation monitor is located at the reactor control console. Conductivity is measured during the daily checkout using a portable probe used to measure a pool water sample.

A thermocouple located in the pool is used to monitor the temperature of the pool water. A similar thermocouple is located in the input of the secondary side of the heat exchanger to monitor the temperature of the cooling water. Both thermocouples have readouts at the reactor control console.

The in-line filter cartridge is replaceable. Two pressure gauges, one on either side of the filter, are used to determine the condition of the filter cartridges. The cartridge filter is designed to remove particulates only. The filter will remove particulates above 20 microns in diameter. The maximum conductivity of the pool water is 2 micromhos before the demineralizer resin must be changed.

The maximum flow rate through the heat exchanger is 70 gal/min. The maximum flow rate through the water-purification branch is 10 gal/min. If the flow rate through the latter exceeds this limit, channeling occurs in the de-mineralizer bed, making it ineffective for de-ionizing of the water. Some of the resin might also be washed out of the de-mineralizer at the high flow rate.

## E.3. Primary Coolant System

The primary coolant system is natural convection. Pool water temperature is controlled through run schedules and administratively. Five thousand gallons of water fill the reactor well. The temperature gradient across the depth of the pool causes the heated water to pass through the core, come to the surface, as the cooler water flows down the inner walls of the tank. The primary coolant systems is adequate for most operations.

## E.3. Secondary Coolant System

The Huron water heat exchanger is a stainless-steel shell and tube. The secondary cooling water passes through the exchanger once and then is drained to the sewer. The pressure in the secondary loop is kept higher than the pressure in the pool water loop to ensure that any leaks would not allow reactor water to flow to the sewer.

A second heat exchange system has been installed. This is a closed loop system that rejects heats through a chiller located outside of 1602 Building. The SR-1 system utilizes glycol in the second loop and R134A in the third loop located in the chiller outside of 1602 building. The heat exchanger with chiller is rated at 1 MW. The piping for flow into and out of the pool is common to both cooling systems.

## E.4. Primary Coolant Clean-up System

The reactor pool is covered to minimize the risk of objects falling into the pool. The cover prevents the collection of dirt and dust in the pool. The cover is opened for maintenance, daily, and monthly checks. The skimmer removes particulates. The coolant system is equipped with a filter to remove debris and an ion exchange resin bed. The conductivity of the water is monitored to minimize corrosion.

## E.5. Primary Coolant Make-up Water System

Deionized water from the building supply is periodically added to the pool. Evaporation accounts for water losses. Water added is tracked and monitored for trends which may be indicative of pool leaking. To date, the water losses are in-line with predicted evaporation rates for the climate and pool water temperature. Excessive evaporative losses are limited by a plastic cover attached below the grill covering the pool.

## E.6. Nitrogen -16 Control System

Significant quantities of radioactive Nitrogen-16 (7 second half-life) are formed in the core of the reactor. The transport time from the reactor core to the surface of the pool has been determined to be about 42 seconds when the reactor is operating at 100 kW. When the cooling system is in operation the transport time is increased by interruption of the vertical convection currents by the discharge of treated water downward over the core of the reactor. In view of the transport time and of the short half-life, the release of the radioactive nitrogen to the environment is negligible.

## E.7. Auxiliary Systems using Primary Coolant

No auxiliary systems are linked to the primary coolant.

# F. ENGINEERED SAFETY SYSTEMS

## F.1. Summary Description

The Dow TRIGA reactor area employs a confinement type engineered safety system. The ventilation system operates at slight, negative pressure. The ventilation system operates in two modes, normal and emergency.

## F.2. Detailed Description

The CAA is equipped with dampers to isolate the air intake. Room air is monitored by the continuous air monitor and area monitor. Room air is a vented to the exterior at 1700 cfm. If conditions indicate a need to isolate the CAA the exterior vent can be closed manually.

### F.2.1. Confinement

The CAA can be isolated from the building ventilation.

### F.2.2. Containment

The Dow TRIGA reactor was not engineered for containment nor is it required. See Chapter M for credible accidents scenarios postulated for this reactor.

### F.2.3. Emergency Core Cooling

The ground water level is higher than the level of the core. Water level would come into equilibrium with the ground water providing sufficient cooling if necessary. Make –up water system can be turned on and/or fire hydrant line set up. The area directly above the pool is not inhabited and there is no contingency for additional emergency core cooling.

# G. INSTRUMENTATION AND CONTROL SYSTEMS

## G.1. Summary Description

The instrumentation for monitoring and control of the Dow TRIGA research reactor is similar if not identical in component and function to other TRIGA reactors around the world. The design basis for this reactor and other similar pool reactors are the physical characteristics of the fuel and control rods. The fuel and control rod information is found in chapter D of this report. The reactor power level is monitored through 2 channels, each consisting of an in-core detector that feeds a signal to a data acquisition unit, DAQ. The DAQ converts the signal which can be sent directly to a display unit. The signal can also be sent to a control system console computer (CSC). Using the monitored data, the operator controls the power level through the movement of the three boron carbide control rods. Rod movement is achieved through rack and pinion drives mounted on the reactor bridge. The reactor control also runs in an automatic mode, the power demand is set by the operator and through a feed back loop the CSC will hold the power level constant by initiating the movement of the regulating rod. The two shim rods movements are not controlled by the CSC auto function. The reactor instrumentation and control systems are designed to ensure the safe operation of the reactor and compliance with the license and technical specifications of the facility.

## G.2. Design of Instrumentation and Control Systems

The instrumentation and controls for the reactor were originally designed by General Atomics. The instrumental and control systems are described in the manufacturers documentation (General Atomics Operator's manual, Operation and Maintenance manual- Microprocessor based instrumentation and control). The systems are used as designed and installed. The instrumentation and controls are calibrated, checked or tested as delineated in the Technical Specifications.

## G.3. Reactor Control Instrumentation

The reactor control instrumentation includes a fission chamber, ion chamber, water radioactivity, temperature, and conductivity monitor; an area radiation monitor (ARM), and continuous air monitor (CAM); and a control console. The neutron channels are mounted on the perimeter of the reflector. The type of chamber and the nature of the electronics package determines the range of the power levels which can be monitored by each channel. The control system and scram functions are tested daily for operability.

### G.3.1. Wide-Range Log/Linear - Period Channel – NM 1000

The Wide Range monitoring channel uses $N_2$ filled fission chamber as a neutron detector, covers the power level from below source level (2 cps ~0.7mW) to full power, on a logarithmic scale. The wide-range channel is also the signal source for the period channel through integration of the signal. The wide range of accurate power readings is the result of the two functional modes of the channel. Below ~150 W the channel operates in a pulse mode. At power levels greater than 150 W the channel reads the continuous current that is proportional to the power level. The wide range log/ linear power channel is tied to rod withdraw prohibit, and source interlock.

### G.3.2. Linear Power Channel

The linear power channel is an uncompensated ion chamber. The channel displays as the NP1000 bar graph and digital read out at the console. This channel has both digital and bar graph read out at the console. The channel can initiate scrams for loss of high voltage and on exceeding the % power setting.

### G 3.3. Automatic Power Control System

The automatic power control system, consists of a servo amplifier that utilizes a signal from the Wide–Range channel, a power-demand signal set by the operator, and the derivative (rate) signal from the period circuit of the log power channel. The servo compares the reactor power with the power demand set by the operator and adjusts the regulating rod position in or out in accordance with the difference, controlling reactor power to the selected power level. It is also possible to use the servo control for automatically changing power level within the limits of the regulating rod worth. During servo operation (automatic control), the reactor period is automatically limited to be more than or equal to a maximum positive preset value, chosen to give a conservative margin between the operating period and the minimum allowed period of seven seconds.

## G.4. Reactor Protection System

### G.4.1. Water Conductivity Monitor

The water conductivity monitor consists of one conductivity probe with a digital readout. The probe is located in the reactor room. Conductivity is measured daily by an aliquot of the pool water.

### G.4.2. Water Temperature Monitor

The water temperature monitor consists of a thermocouple mounted in the pool. This thermocouple and a similar one mounted in the cooling-water side of the heat exchanger are connected through a selector switch to a readout device mounted on the reactor control console.

## G.5. Engineered Safety Features Actuation System

Safety features are engineered to ensure that the safety limit is never approached for the Dow TRIGA research reactor. For the Dow TRIGA research reactor the principal physical barrier being protected by the safety limit is the fuel element cladding temperature. The power channels are monitored and scram set points are programmed to initiate rod drop well below the licensed power level ensuring that the maximum safe fuel cladding temperature is never reached.

## G.6. Control Console and Display Instruments

The reactor control console contains the control, indicating, and recording instrumentation required for operation of the reactor.

On the operator's panel are (1) rod position indicators to show the position of the shim and regulating rods; (2) control rod switches to control the position of each rod and annunciator lights to indicate the up and down positions of each rod and rod-magnet; (3) monitor alarm lights indicating the sources of scram signals; and (4) a locking switch which controls the power to the control rod electromagnet circuits, with its associated power indicating light.

Shutdown induced by dropping the control rods following interruption of the control rod electromagnet power supply is automatically initiated by (1) excessive power level on either of the two power monitoring channels, (2) failure of high voltage power to either the ion chamber or wide-range power channel, or (3) failure of operating power to the console. Such a shutdown can also be initiated manually with a single stroke.

## G.7. Radiation Monitoring System

### G.7.1. Water Radioactivity Monitor

The water radioactivity monitor consists of a Geiger tube and associated electronics. The Geiger tube is located in a re-entrant tube in the water monitor vessel and is connected to a meter and alarm on the console. The

alarm sounds when the radioactivity exceeds a preset level. A level of 0.1 μCi/mL for 10-minute-old fission products in the pool water will give a reading of about 5000 counts/second.

### G.7.2. Area Radiation Monitor

A Geiger tube detector is placed in the reactor room just over the entrance from the laboratory. This detector has one readout at the detector location and one readout on the reactor control console. The unit alarm set points are located at the console. Manuals for the ARM are located in the control room. When the count rate at the detector exceeds the set point the alarm sounds. The alarm continues sounding until the radiation detected falls below the set.

### G.7.3. Continuous Air Monitor

A continuous air monitor is placed in the reactor room. This system is equipped with an air pump, a filter, a Geiger counter, and associated electronics. The pump continuously draws room air through the filter, which is placed near the window of a Geiger counter tube. Radioactive particles trapped in the filter give rise to signals from the Geiger tube. The output of the circuits is fed to a recorder equipped with an alarm set point. When the set point is exceeded an alarm circuit is latched which activates a loud bell, a bright flashing light, and a signal to the Dow Security dispatcher's desk. The dispatcher position is manned at all times. A second circuit to the dispatcher's desk signals any loss of power to the continuous air monitor. The alarm set point is adjusted to trip at approximately three times the maximum natural background observed at the site. The set point provides enough sensitivity to signal persons when the exposure might be larger than background, such as to be expected following release of radioactivity from the fuel or an experiment, so that actions may be taken to terminate the exposure, usually by leaving the area, without causing a great number of false alarms due to background fluctuations. Typically, in the case of a ruptured fuel element, a short exposure would be considerably less than the total annual background exposure due to breathing radioactive materials naturally in the air. A prompt response to the alarm is consistent with the ALARA principle.

Using the three radiation monitoring systems, all of which are verified as operational as part of the daily check out meet or exceed safe operation requirements.

# H. ELECTRICAL POWER SYSTEMS

## H.1. Normal Electrical Power

Electrical power is provided by the local power utility. There is 220 V and 110 V service to the reactor room, console and associated laboratories. The reactor room has an independent circuit panel.

## H.2. Emergency Electrical Power System

The reactor control system is fail-safe in the event of power failure; that is, loss of power will de-energize the magnets and release the control rods. There is no provision for emergency or back-up power. Radiological surveillance can be performed, in case of a power outage, using the portable battery operated instruments which are available.

# I. AUXILIARY SYSTEMS

## I.1. Heating, Ventilation and Air Conditioning System

Dow maintenance personnel provide the reactor lab with electricity, potable water, deionized water, heating and air conditioning.

Fresh air for the reactor room is supplied from the outside by an intake fan followed by a heating system. Room air is exhausted by a second fan to the outside. The exhaust is furnished with a manual damper so the room can be sealed in the event of a release of radioactivity in the room. The air turnover rate is about 1700 cubic feet per minute, corresponding to an air turnover time of about 3.5 minutes. The intake and exhaust systems are adjusted so that the room is kept at a negative pressure with respect to both the outside air and to the adjacent laboratory, so that air flows through the doors and the building is into the reactor room.

The laboratory rooms adjacent to the reactor room are supplied air from the overall building ventilation system. This air is exhausted through the fume hoods. In the event of a spill of radioactivity in the hot chemistry areas the doors and transoms can be closed, helping to prevent contamination of the adjacent areas. The exhaust rates of the hoods are in the range of 1000 cubic feet per minute; these normally run continuously for proper heating and air conditioning of the building.

There are no seals, other than those required to provide protection from the weather, on the major door from the reactor room to the outside of the building. There are no seals on the doors between the console area and the reactor room; the reactor room is generally held under negative pressure with respect to the console area by the dedicated air handler in order to prevent backflow of materials from the reactor room to the console area.

When the reactor ventilation systems are not powered there is a net flow of air from the reactor room into the console/laboratory area; this flow is reduced but not terminated when the outside louvers of the reactor room ventilation system are closed. This flow occurs because the air handling system (fume hoods) for the building produces a negative pressure within the building with respect to the outside.

The ventilation system in the reactor room can be shut down from the console by the operator. During such a shutdown a separate set of louvers on the inlet duct automatically closes.

## I.2. Handling and Storage of Reactor Fuel

Fuel may be stored in any of several storage wells, or in storage racks located in the reactor pool. In the reactor room there are three storage wells each about eleven feet deep which have shielding plugs and a locking mechanism at the top. These wells can be used to store radioactive materials or up to nineteen of the TRIGA fuel elements while maintaining a safe geometry. These wells can be filled with water for shielding purposes.

## I.3. Fire Protection System and Programs

Building 1602, which houses the reactor, is equipped with fire detection system. Flammable materials are kept to a minimum in the reactor room. The fires suppression system is in compliance with the National Fire Protection Code. In the event of fire or smoke the system has both audible and visible warning. The fire suppression system is tested and maintained by the site maintenance staff. In the event of a fire, the first responders are the site's fire crew. The plant's fire crew can call on Midland City Fire Department if necessary. The reactor is protected from fire damage from the water column above. Loss or damage of the rod drives or console due to fire disables the reactor in a fail safe mode, all control rods down.

## I.4. Communication System

Control room and laboratories are equipped with phones. A direct phone line is set up to the site dispatcher. Additionally there is a phone located at the guard shack near the 1602 building. Walkie talkies are located at

two of the exterior doors. The building is equipped with both a public announcement system and sirens. These systems are used to inform the occupants of the building of events that would impact the building.

## I.5. Possession and Use of Byproduct, Source and Special Nuclear Material

The Dow Chemical Company through license R-108 can possess materials to operate a research reactor pursuant to 10CFR 30, 50, and 70. The facility is licensed to receive, possess and use up to [redacted] of U 235 less than 20%, and [redacted] of up to 93% enriched. The facility is also licensed to hold a [redacted] AmBe source for use in conjunction with the reactor. Additionally, the facility may possess but not separate byproduct and special nuclear materials produced during the operation of the reactor.

Radioactive sources, and samples are stored in lead pigs, caves or shielded storage areas. Sources are clearly labeled. Access to rooms containing sources and samples is restricted to trained individuals and those who are accompanied by trained individuals.

Samples, experimental devices, reactor components and materials generated in normal reactor operations can only be released to holders of an appropriate radioactive materials license. Small quantities of mixed waste are generated, and these materials are released to only the appropriate license holders for mixed waste treatment and disposal.

## I.6. Cover gas control in closed Primary Coolant Systems

Not applicable

## I.7. Other Auxiliary Systems

The reactor room is equipped with a security system in accordance with the security plan. Access is controlled by the Director.

[redacted]

# J. EXPERIMENTAL FACILITIES AND UTILIZATION

## J.1. Summary Description

The reactor must be operated, and experiments must be performed using the reactor, in a manner which ensures safety of Dow personnel and the general public. Restrictions are placed on the conduct of experiments to provide assurance that safe operation is the rule.

Any operation of the reactor for any purpose must be reviewed and authorized in a manner intended to provide control of the types of experiments and the modes of operation.

Some operations have been very well studied and have been the subject of written procedures, in which specific instructions and operating conditions are found. Such procedures, which have been reviewed by the Reactor Operations Committee (ROC), have generic approval and may be performed by any licensed operator without further review or authorization. Such procedures are usually used during the regular routine checkouts of the reactor and the associated systems. Thus, for example, the procedure for measuring the core excess at low power, involving operation of the reactor at a specified low power level, is used during every daily checkout and at other times. This particular procedure is written, has been reviewed and approved by the ROC, and may be performed without further authorization.

All other operations of the reactor or performance of experiments involving the reactor, which are not covered by approved written procedures, must have the appropriate written authorization. An operation shall not be approved unless the review allows the conclusion that the failure of an experiment will not lead to a failure of a fuel element or any other experiment.

Any experiment which has a reactivity worth of more than $0.75 must be securely fastened in place in order to prevent large changes of reactivity during operation of the reactor due to motion of the experiment. No experiment shall have a reactivity worth greater than $1.00. In-core experiments shall not occupy adjacent positions in the B and C rings.

Experiments which contain materials which-could damage components of the reactor are subject to strict controls: corrosive materials, potentially explosive materials, liquid fissionable materials, or materials which are highly reactive with water must all be doubly encapsulated. Explosive materials in quantities greater than 25 milligrams shall not be irradiated in the reactor or experimental facilities without out-of-core tests intended to show that no damage to the reactor or its components would occur if the materials explode, considering the containment of the materials. For quantities of these materials which do not exceed 25 milligrams calculations must show that the experiment container design pressure exceeds the pressures which could be generated by detonation of the materials.

Experiment materials, except fuel materials, which could off-gas, sublime, volatize or produce aerosols under (a) normal operating conditions of the experiment or the reactor, (b) credible accident conditions in the reactor or (c) possible accident conditions in the experiment shall be limited in activity such that if 100% of the gaseous activity or radioactive aerosols produced escaped to the reactor room or the atmosphere, the airborne concentration of radioactivity averaged over a year would not exceed the limits of Appendix B of 10 CFR Part 20.

Fueled experiments shall be controlled such that the total inventory of iodine isotopes 131 through 135 in the experiment is no greater than 1.5 curies and the maximum strontium-90 activity is no greater than 5 millicuries.

In case any experiment container fails and releases material which could damage the reactor fuel or structure a physical inspection of the affected parts shall be performed in order to evaluate the consequences of the event and any need for corrective action.

## J.2. Experimental Facilities

The numerous experimental positions available in the TRIGA reactors can accommodate various shapes and sizes of experiments. The primary regions available are in-core grid positions, the rotary specimen rack, and the reactor pool area.

### J.2.1. Rotary Specimen Rack

The rotary specimen rack, (RSR) or "lazy susan" is used for isotope production and small-sample irradiations. The specimen rack is completely enclosed in an aluminum can which fits into a well in the top of the radial reflector. When inserted into the reflector, the rotary specimen rack, which consists basically of an aluminum support ring, is positioned about on a level with the top grid plate. The ring, supported by a large annular bearing, can be rotated about the core. Forty evenly spaced aluminum cups suspended from the support ring serve as specimen holders. Rotation of the rack assures that all forty cups are exposed to neutron fluxes of comparable intensity. The cups extend from the ring to about 4 in. below the level of the top of the active lattice. In the radial direction, the center of the cups is about 4 in. from the outer edge of the core. The cups will take sample containers up to 27.2 cm long and 3 cm in diameter. The ring can be rotated manually or electrically from the top of the reactor pit, so that any one of these cups can be aligned with a single sample-removal tube which runs up to the top of the reactor pit. This tube is used for inserting and removing irradiation specimens. A rotary drive and indexing mechanism ensures positive positioning of the cups.

During the activation of plastic materials hydrogen gas is evolved due to radiation damage to the material. This amounts to about 52 cc/Mwhr for a 50cc specimen container made of polyethylene and 13 cc/Mwhr in a 2-dram polyethylene vial. For long-time activations provisions must be made to prevent excessive buildup of pressure in the plastic containers.

Specimens to be irradiated are inserted into special containers of plastic or aluminum. The containers are removed from the RSR by means of a "fishing rod" grapple mechanism. Attached to the end of the "fishing" line is an electrically actuated solenoid grapple which grasps the containers for removal.

Samples which are expected to become warm during activation are encapsulated in aluminum cans which will not melt readily and are screwed shut.

Points to consider when introducing samples into the reactor are the effect of the sample (experiment) on the excess reactivity of the reactor; possible hazards of chemical nature - such as sudden polymerization of monomers in the high radiation field, resulting in heating up and bursting of the sample tube - requiring time-consuming cleanup of the RSR; or possible explosion of the sample in the reactor during irradiation. Heating of the sample due to a high neutron absorption cross section could result in melting down the polystyrene sample container.

### J.2.2. Pneumatic Transfer System

Very short-lived radioisotopes are produced with the aid of a pneumatic transfer system which rapidly conveys a specimen to and from the reactor core. The system is consists of the following major components:

- A specimen capsule ("rabbit"),
- A blower-and-filter assembly,
- A valve assembly, terminus assemblies,
- A receiver assembly,
- A control assembly.

This system is controlled from the reactor console or from the receiving area and may be operated either manually or automatically. During automatic operation an electric timing device is incorporated into the system so that the specimen capsule is ejected automatically from the core after a predetermined exposure time. The system operates on a pressure differential principle, drawing the specimen capsule into and out of the core by vacuum. Four solenoid-operated valves control the air flow and hence the direction of rabbit movement within the system. The system is always under a negative pressure so that any leakage is always into the tubing system. All the air from the pneumatic system is passed through a filter before it is discharged into a hood.

### J.2.3. Dummy Fuel -Element

Through the use of special assemblies, small specimens may be irradiated in the area of peak neutron flux. These assemblies have the same over-all dimensions as the fuel-moderator elements; however, they contain cavities in which specimens may be placed for irradiation.

### J.2.4. Water Region

In addition to the above facilities, large-volume assemblies can be irradiated at lower flux levels in the water at the side of the radial reflector and in the water volume above the reactor core.

### J.2.5. Central Thimble

The central thimble is filled with water and can be used for activation of samples packaged in watertight containers at the highest available flux level in the reactor (approximately $9.2 \times 10^{12}$ $n_{th}/cm^2$-sec at 300 kW power ).

When using this facility one should take into consideration the rather large fast-neutron component of the flux (~ $2.7 \times 10^{13}$ $n_f/cm^2$sec at 300 kW power) and the large gamma flux at that location.

The core reactivity is influenced more strongly by placing a sample into the central thimble than by placing it into any other location in the reactor.

The central thimble can be provided with a pressurizing cap which permits emptying of the central thimble of water by forcing the latter out of the tube through openings which are located just above the reactive part of the core. A well collimated beam of neutrons and gamma rays can be accessed at the top of the pool.

## J.3. Experimental Review

Authorization of an experiment or operation of the reactor is granted by the ROC; in case of very well-studied experiments or operations which involve known levels of hazards the ROC may designate such experiments or operations as "routine experiments" and may delegate the authorization to the Reactor Supervisor and designated Assistant Reactor Supervisors.

Experiments which are similar to routine experiments in that the hazards are not significantly different from nor greater than those associated with those of routine experiments may be designated "modified routine experiments" and may be authorized by the Reactor Supervisor and by designated Assistant Reactor Supervisors. The written approval for modified routine experiments shall include documentation that the hazards have been considered by the reviewer and been found appropriate for this form of experiment.

All other experiments are designated "special experiments". Special experiments must have written approval of both the Reactor Supervisor (or designated Assistant Reactor Supervisors) and of the ROC. Certain experiments will always be special experiments, requiring the review and approval of the ROC, no matter how many times these experiments have reviewed or performed. Such experiments include: any experiment involving fissionable material, and experiments which would require a change of core configuration, or a change in the equipment or apparatus associated with the reactor core or its irradiation facilities, or a new piece of

apparatus being mounted in the reactor well. Movement of the neutron source for the purpose of routine checking of the instrumentation, or the movement of the neutron detectors to establish the proper calibration of the associated channels, are experiments which are excepted from the requirement for review. There are three classes of experiments (routine, modified routine, and special) performed with the TRIGA reactor:

1. Routine experiments are those which involve operations under conditions which have been extensively examined in the course of the reactor test programs. Under the licenses for the TRIGA reactor, routine operation within the limits of the Technical Specifications applicable to the reactor is permissible at the discretion of the Reactor Supervisor and no further review is necessary.

2. Modified routine experiments are those which have not previously been performed but are similar to routine experiments in that the hazards are neither significantly different nor greater than those for the corresponding routine experiment and are permitted under the Technical Specifications. These modified experiments may be performed at the discretion of the Reactor Supervisor without further review, provided that the hazards associated with the modified routine experiments are reviewed and the determination made and documented that they are neither significantly different nor greater than those involved with the corresponding routine experiment which shall be referenced.

3. Special experiments are those which may be performed under the Technical Specification for the reactor and are not routine or modified routine experiments. Special experiments must be authorized by the review procedure described in Section 3.3.2. and carried out in the presence of the Reactor Supervisor or his designated alternate.

### 3.3.2. Review Procedure

Proposals for the performance of special experiments, changes in operating procedures, changes in the administrative procedures, or changes in reactor instrumentation must be authorized through the approval review method in advance of reactor operation. The steps in the review procedure are as follows:

A complete written description of the proposed action must be submitted for approval by the Reactor Supervisor to the Reactor Operations Committee.

The Reactor Operations Committee must review and approve the proposal. The review process is shown in Figure 4. It is the responsibility of the Reactor Supervisor to prepare or have prepared a written description of a proposed experiment or any proposed change in procedure.

The description of the proposed experiment or change must contain sufficient detail to enable the Reactor Operations Committee to evaluate the safety of the experiment. The following data must be included in the description.

1. Object of the experiment.

2. Description of the experiment. This will include a discussion of both the equipment and the experimental methods to be used. If the experiment involves making a small change in the existing core, the maximum change in reactivity that can be introduced with this experiment should be estimated and should be stated in the proposal. The experiment shall be considered for its effect on reactor operation, and the possibility and consequences of its failure including any significant consideration of interaction with core components.

3. Equipment needed. (This is for the information of the operating staff.)

4. Time needed for the experiment.

5. Date on which the equipment will be ready.

6. Names of individuals who will perform the experiment.

A copy of the description of the special experiment, as finally approved, will be filed in the office of the Analytical Laboratory, 1602 Building.

Proposals for the performance of routine or modified routine experiments are made on the Reactor Activation Request Form provided for this purpose. Approval of the proposed experiment is given by the Reactor Supervisor or his designated alternate.

The experimenter himself should not approve his own proposal, unless he is the only authorized person at the facility.

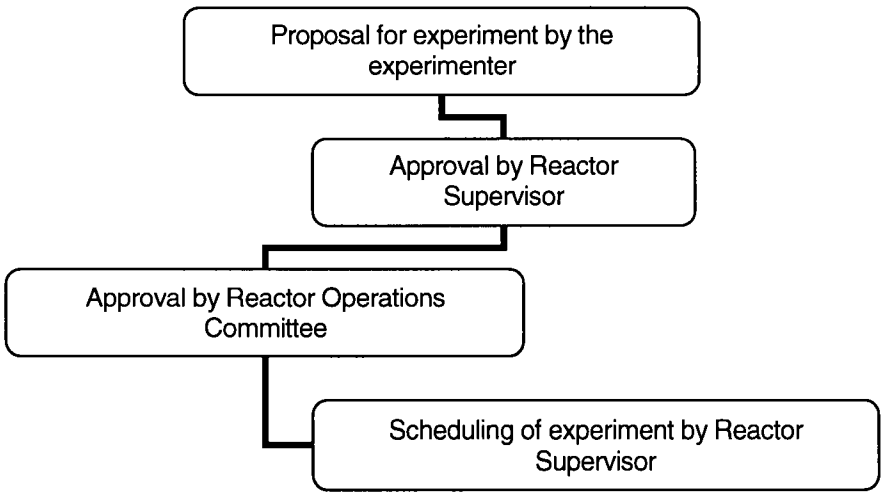


• Figure 4. Flow Sheet for Special Experiment Approval

# K. RADIATION PROTECTION PROGRAM AND WASTE MANAGEMENT

## K.1. Radiation Protection

All activities at the Dow TRIGA research reactor are completed under the principal of As Low as Reasonable Achievable, ALARA. Licensed operators receive annually training under the direction of the radiation safety officer.

### K.1.1. Radiation sources

In addition to the fuel, the Dow TRIGA reactor facility has a [redacted] AmBe source used for the start –up channel of the reactor, a [redacted] Cs-137 source and several small button sources used for equipment checks. Sources are located in locked areas of the facility.

There is a bank of 105 smaller wells, each three feet deep in concrete, equipped with rods that can hold one small radioactive sample similar to the normal packaged sample used in the activation analysis program, located in the floor along the north wall to the west of the entrance to the reactor room. A storage area has been built of 2 in by 4 in by 8 in lead bricks on the floor of the room along the east wall to accommodate larger samples or groups of samples.

High level radioactive materials may be stored in racks which are located along the sides of the pool.

Low level radioactive materials may be stored in the laboratories or in the locked, shielded area of the West Cave or in other secure areas of 1602 Building, following the guidelines of the Dow Radiation Protection Manual.

Short-lived radioactive materials may be packaged and stored in a secure facility for a time to allow the radioactive nuclei to decay. Such materials, after monitoring to assure that no radioactivity can be detected, may be disposed as chemical waste. Longer-lived radioactive materials are segregated and disposed of through the Industrial Hygiene group in a manner consistent with the appropriate licenses.

Radioactive samples may also be stored in a locked vault located in lab 11. Access is restricted to authorized personnel.

### K.1.2. Radiation protection program

The reactor facility uses and follows the Dow Radiation Protection program under the direction of the Radiation Safety Officer. The program includes radiation fundamentals, pertinent federal and state regulations, contamination control, inventory control, and monitoring.

### K.1.3. ALARA

All handling and release of radioactive materials and all exposure to ionizing radiation are performed using the principles of ALARA - As Low As Reasonably Achievable. The objectives of ALARA are to minimize the exposure of individuals to ionizing radiation, to minimize the production of radioactive materials, and to minimize the release of radioactive materials to the uncontrolled environment. Training, planning, shielding, practice sessions, distance, special tools, monitoring, and design of experiments are used to achieve the goals of the ALARA program.

### K.1.4. Radiation Monitoring and Surveying

There are fixed radiation monitors in the facility, continuous air monitor, area radiation monitor and in the water line. There are also several portable detectors available for use. These detectors are checked for operability during daily checkout.

Monthly wipes are taken at 20 critical locations in the lab, including doorknobs, floors, and phones. Wipes are sent to the Dow Industrial Hygiene division for counting. Identified contamination is immediately cleaned.

Dosimetry is placed on the walls of the reactor room and at the console. These monitors are exchanged on a quarterly basis. Additionally the Dow's Industrial Hygiene does an independent survey of the facility twice a year.

### K.1.5. Radiation Exposure Control and Dosimetry

Dosimetry is provided for trained individuals. Dosimeters are replaced on a quarterly basis. Table 5 indicates the investigation levels established in the radiation protection program.

• Table 5. Dosimetry Investigation Levels

| Affected area | Investigation level I<br>mrem/qtr | Investigation level II<br>mrem/qtr |
|---|---|---|
| 1. TEDE | 125 | 375 |
| 2. Skin or extremities | 1250 | 3750 |
| 3. Lens of the eye | 375 | 1125 |
| Organ or tissue other than the lens of the eye | 1250 | 3750 |

The following actions occur when a dosimetry reading falls into the levels defined in the Table 5.

a. Below level I
No further action unless deemed necessary by the RSO
Equal to or greater than level I but less than Level II – RSO investigation for root cause. A copy of the individuals NRC form 5 will be presented at the next schedule RSC meeting. The Committee will review and compare the dose with others performing similar tasks. The review will be recorded in the minutes. No action is required
b. Equal to or great than level II
The RSO will investigate the root cause and if warranted will take action. A report of the investigation, any actions taken and a copy of the individual's form NRC-5 or its equivalent will be presented to the RSC on completion of the investigation.

A complete description of the process is found in the Radiation Safety manual.

Samples are handled wearing gloves, and allowed to decay in pool or other shielded areas for safe handling when necessary.

### K.1.6. Contamination control

Contamination identified is immediately cleaned. Contamination would be identified through observation, daily checkout or monthly. Samples are handled to minimize contamination potential. The majority of NAA samples are not removed from primary containers for analysis. Additionally there is not an accepted experiment that requires post irradiation processing. The clean–up of minor contamination is preformed by the reactor operators and experimenters. Larger areas of contamination will be cleaned under the direction of the site Radiation Safety Officer and Environmental, Health, and Safety (EH & S) staff. If the contamination is fixed, the area is clearly labeled.

### K.1.7. Environmental Monitoring

The dosimeters located on the interior walls of the reactor room are a conservative indications of doses possible at the exterior of the room. The water monitor and continuous air monitor, (CAM) are also considered

environmental monitors indicating if a release event is happening. The CAM sends an alarm to DOW security. There is no additional environmental radiation monitoring program.

## K.2. Radioactive Waste Management

Radioactive materials produced in the reactor are segregated according to half-life. Materials with half-lives of less than 15 days are stored for periods of more than six months, then monitored for residual radioactivity and discarded as chemical waste if no radioactivity is found; any radioactive materials found are identified and treated as long-lived radioactive waste. The long-lived radioactive materials, those with half-lives greater than 15 days, are stored until they can be disposed of as low-level radioactive materials through the Industrial Hygiene function of The Dow Chemical Company. In the past these materials have been sent to licensed commercial facilities for disposal. Liquid long-lived radioactive materials were solidified before disposal. The spent ion-exchange resin from the water purification system is dried and disposed of as long-lived low-level radioactive material.

All floor drains in the laboratory area have been sealed to minimize the possibility of loss of radioactive materials to the sewer system and thence to the municipal water treatment system.

### K.2.1. Radioactive Waste Control

Items no longer useful are labeled and placed in controlled areas as per the Radioactive Materials Loose Isotope procedures 7, 8,9,10 and 11 and the Dow TRIGA operations manual. Radioactive inventory is kept in locked area's lab 52 and lab 11. Procedures are described in K.2

### K.2.2. Release of Radioactive Waste.

Transfer of radioactive materials to other Dow laboratories or to other facilities is performed under the guidance of the Radiation Safety Committee, the site Radiation Safety Officer, and the Dow Radiation Protection Manual to assure compliance with all regulations and license requirements.

# L. CONDUCT OF OPERATIONS

## L.1. Organization

The reactor at the Analytical Sciences Laboratory, 1602 Building, has been constructed for the purpose of providing a source of neutron and gamma radiation for research and development.

In attaining this objective, safety of operation is of paramount importance. This requirement for safety is threefold:

1. To protect personnel working near the reactor and at the laboratory.
2. To assure that operation of the reactor does not endanger the health of persons outside the laboratory.
3. To prevent damage to the reactor and associated facilities.

Operation of the TRIGA reactor is an activity of the Analytical Sciences Laboratory. The part of the laboratory organization which is concerned with the operation of the reactor facility is shown in Figure 8.

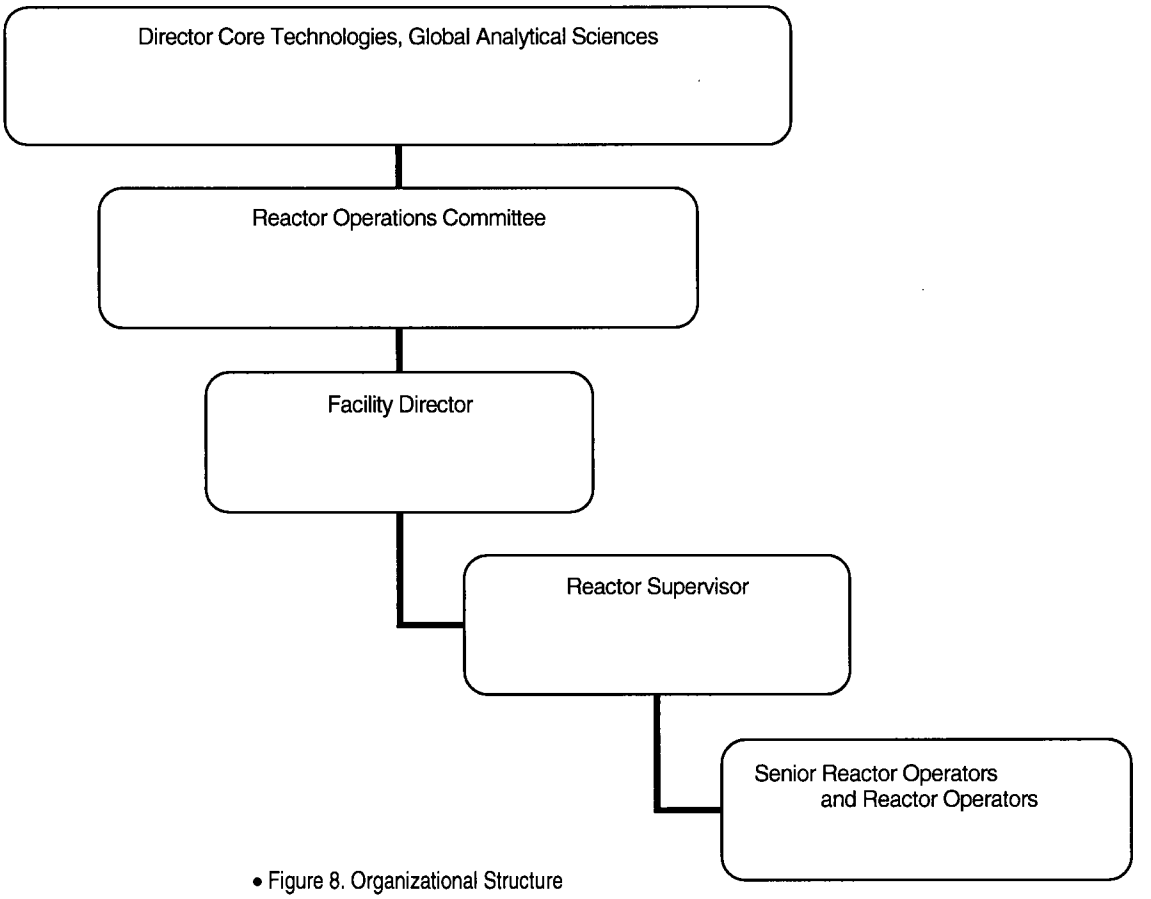


• Figure 8. Organizational Structure

### L.1.1. Responsibility

L.1.1.1. Radiation Safety Committee

The Radiation Safety Committee of The Dow Chemical Company, U.S.A. holds the NRC Operating License for the reactor facility. It is thus responsible for the operation of the facility to be in compliance with the operating license and all other rules and regulations concerning radiation hazards, handling and storage of radioactive material and special nuclear material. Some of these rules are incorporated in the Technical Specifications: 10CFR20, 10CFR50, 10CFR55 of the Atomic Energy Act of 1954; Regulations governing the Use of Radioactive Isotopes, X-radiation and all other forms of Ionizing Radiation. Division of Occupational Health, Michigan Department of Health, Lansing, Michigan (1957); and the Dow Radiation Protection Manual.

The Radiation Safety Committee certifies upon recommendation of the Radiation Safety Officer, those persons who may receive and work with radioactive material.

It determines for The Dow Chemical Company at the Midland location the policies and safety standards on all matters concerning radiological safety.

It approves and determines safe handling procedures for all radiological hazards as well as the use and operation of the reactor facility.

It reviews the reactor operations at least twice a year and more frequently when circumstances require.

It reviews also the operations of all other facilities presenting possible radiological hazards and must approve all plans for such facilities.

The Radiation Safety Committee approves the administrative procedures for proper safeguarding against hazards associated with radiation and radioactivity.

L.1.1.2. Reactor Operations Committee - DOW TRIGA Reactor

This committee is made up of at least four members of the laboratory staff including the reactor supervisor and the Radiation Safety Officer.

1. All questions of safety of the operation and scheduling of work that are not readily handled by the reactor supervisor are referred to this committee.
2. The committee reviews special experiments which fall into the following categories:
   a. Any experiment which involves fissionable material.
   b. Any experiments of a type not previously reviewed by the committee.
   c. Any experiment which would demand a change of core configuration, or change in equipment or apparatus associated with the reactor core or its irradiation facilities, or a new piece of apparatus being mounted in the reactor well. (These kinds of experiments will require committee review and approval even though similar experiments have been previously approved.)
3. In case of a scram, which has no apparent direct cause, the committee will review the case and determine whether the reactor will be restarted and the procedure for startup.
4. The committee will approve proposed changes in operating procedures and will be responsible for determining whether a proposed change, test or experiment would constitute an unreviewed safety question or a change in technical specifications, as required by 10CFR50.
5. The committee will meet at least quarterly to review operations for the previous period and determine operations for the coming period. In addition, the committee members will be readily available for determining operating matters that should be decided on short notice.

6. A quorum is established as a majority of the membership. No more than one-half of the quorum will be represented by members of the operations staff.

7. The committee members may be polled by telephone by the chairman or secretary to discuss and decide committee business at times when this is expeditious.

8. The secretary will write minutes of each meeting and issue them to the members.

L.1.1.3. Radiation Safety Officer

Radiation Safety Officer and his/her staff are specialists in radiological safety. It is their function to assist personnel with radiation and contamination control problems. The Radiation Safety Officer will report to the Reactor Supervisor, the Reactors Operations Committee, and to the Director of the Laboratory any unsafe conditions and departures from the approved procedures, licenses and policies. The Radiation Safety Officer is also responsible for radiation safety training.

The Radiation Safety Officer for the Dow Research Reactor Facility is responsible for:

1. Making periodic radiation surveys and reviews of operating practices. Any hazardous conditions are reported to the Reactor Supervisor.

2. Instructing the operating staff in the use of personnel and area monitoring equipment.

3. Supervising decontamination operations when necessary.

4. Supervising the periodic reading, calibration and evaluation of radiation-measuring devices, including film badges for personnel.

5. Recommending the availability of protective clothing and other safety devices, as required for the protection of personnel working at the facility and instructing such personnel in their use.

6. Keeping a list of all persons authorized by the Radiation Safety Committee to receive and work with radioactive material.

L.1.1.4. Reactor Supervisor

The Reactor Supervisor of the TRIGA Research Reactor has over-all and primary responsibility for the operation of the facility and of the reactor. He is directly responsible to the Director of the Laboratory. Specifically, the Reactor Supervisor is responsible for:

1. Scheduling of reactor experiments.

2. Compliance with facility licenses and applicable regulations.

3. Establishing and maintaining, with the concurrence of the Reactor Operations Committee, appropriate checkout procedures to be used routinely concerning reactor operations.

4. Establish scram and alarm levels within the technical specifications.

5. Maintaining the reactor and associated instrumentation.

6. Limiting exposure of personnel and dispersal of radioactive material to the limits set forth in the NRC regulations contained in Title 10, Chapter 1, Part 20, Code of Federal Regulations (10CFR20), "Standards for Protection Against Radiation".

7. Maintaining logs and records of reactor operation.

8. All fissile material, fertile materials and radioactive material within the facility.

9. Conducting of all experiments in the facility.

10. Directing the activities of senior reactor operators and reactor operators.

The Reactor Supervisor may designate licensed Senior Operators to carry out these responsibilities in his behalf.

During the performance of special experiments, the Reactor Supervisor or one of his alternates must be present at the facility.

The Reactor Supervisor shall be an NRC licensed Senior Reactor Operator for the TRIGA reactor of the facility.

L.1.1.5. Senior Reactor Operators and Reactor Operators

Senior Reactor Operators and Reactor Operators for the TRIGA Reactor Facility are appointed by the Facility Director and must hold the corresponding license issued by the NRC for the reactor to be operated.

Specifically the Reactor Operator is responsible for:

1. Operating the reactor in accordance with the pertaining administrative and operating procedures approved by the Reactor Operations Committee and within the limitations of the appropriate Facility License and Technical Specifications.
2. Preparing the logs and records of the reactor operation.
3. Reporting all unusual conditions and events pertaining to the facility and its operation to the Reactor Supervisor.
4. The radiation safety of all personnel inside the reactor room during operation of the reactor in accordance with 10CFR20.
5. Insertion and removal of experiments with the written approval of the Reactor Supervisor or his designated alternate.
6. Proper shielding and storage of radioactive materials removed from the reactor, until they are turned over to a person authorized by the Reactor Supervisor or his designated alternate to receive them.

The operator will not operate the reactor except for experiments or classes of experiments and irradiations that have the necessary approvals.

L.1.1.6. Experimenter
Although non-facility personnel may advise the Senior Reactor Operator or Reactor Operator regarding the operation of the reactor, or for making recommendations to the Operator before the experiment is begun, the Operator alone controls the reactor during its actual operation.

If, during reactor operation, a disagreement arises between the TRIGA reactor staff and an experimenter regarding the safety of the operations, the experiment will be temporarily terminated. If the Reactor Supervisor, the Experimenter, and the Operator reach agreement, the Reactor Supervisor will direct the Operator to proceed with the operations. If no agreement results, any party may request consultation with the Reactor Operations Committee.

### L.1.2. Staffing

The reactor laboratory is staffed with a minimum of two licensed senior reactor operators. The staffing meets all requirements of 10 CFR 50.54.

### L.1.3. Selection and Training of Personnel

Senior Reactor Operators and Reactor Operators for the TRIGA Reactor Facility are appointed by the Facility Director and must hold the corresponding license issued by the NRC for the reactor to be operated. Training and requalification are the responsibility of the Director.

### L.1.4. Radiation Safety

Senior Reactor Operators and Reactor Operators for the TRIGA Reactor Facility are held responsible for safe operation of the reactor. Individuals are required to complete annual radiation safety training organized by Radiological health under the direction of the Radiation Safety Officer. RO's and SRO's are also responsible to complete requalification which includes radiation safety training. All activities at the facility are completed using the principal of ALARA.

## L.2. Review and Audit Activities

The review and audit functions are the responsibility of the Reactor Operations Committee, ROC. These responsibilities are delineated in the technical specification.

### L.2.1. Composition and qualifications

The committee is composed of the facility director, radiation safety officer, reactor supervisor and one or more individuals competent in the field of reactor operations.

### L.2.2. Charter and Rules

a. This Committee shall consist of Facility Director, who shall be designated the chair of this committee; the Radiation Safety Officer; the Reactor Supervisor; and one or more persons who are competent in the field of reactor operations, radiation science, or reactor/radiation engineering. In the event that the positions of the Reactor Supervisor and Facility Director are filled by the same person, a manger within Analytical Sciences Laboratory shall serve as the chair of the committee.

b. A quorum shall consist of a majority of the members of the ROC. No more than one-half of the voting members present shall be members of the day-to-day reactor operating staff.

c. The Committee shall meet quarterly and as often as required to transact business.

d. Minutes of the meetings shall be kept as records for the facility.

e. In cases where quick action is necessary members of the ROC may be polled by telephone for guidance and approvals.

f. The ROC shall report at least twice per year to the Radiation Safety Committee.

### L.2.3. Review Function

The ROC shall review and approve:

a. every experiment involving fissionable material;

b. experiments or operations which would require a change of core configuration, or a change in the equipment or apparatus associated with the reactor core or its irradiation facilities, or a new piece of apparatus being mounted in the reactor well; except that movement of the neutron source for the purpose of routinely checking the instrumentation, or the movement of the neutron detectors to establish the proper calibration of the associated channels shall not require review by the ROC;

c. any other experiment or operation which is of a type not previously approved by the Committee;

d. proposed changes in operating procedures, technical specifications, license, or charter;

e. violations of technical specifications, of the license, of internal procedures, and of instructions having safety significance;

f. operating abnormalities having safety significance;

g. reportable occurrences;

h. proposed changes in equipment, systems, tests, or experiments with respect to unreviewed safety questions; and

i. audit reports.

### L.2.4. Audit function

The ROC shall direct an annual audit of the facility operations for conformance to the technical specifications, license, and operating procedures, and for the results of actions taken to correct those deficiencies which may occur in the reactor facility equipment, systems, structures, or methods of operations that affect reactor safety.

This audit may consist of examinations of any facility records, review of procedures, and interviews of licensed Reactor Operators and Senior Reactor Operators.

The audit shall be performed by one or more persons appointed by the ROC. At least one of the auditors shall be familiar with reactor operations. No person directly responsible for any portion of the operation of the facility shall audit that operation.

The ROC shall direct an annual audit of the facility emergency plan, security plan, and the reactor operator requalification program. A checklist is provided to the external auditor.

## L.3. Procedures

Written procedures are reviewed and approved by ROC. The operational procedures are utilized to complete technical specifications, license requirements and insure the safe, and secure operation of the Dow TRIGA reactor. Table 6 contains a listing of the current procedures and the date the last revision. A description of the procedures and included in this section of the Safety Analysis report.

• Table 6 Procedures for The Dow Chemical Company-TRIGA Research Reactor

| Reference number | Title | Latest revision date |
|---|---|---|
| 4.1.1 | Daily prestart checklist | 11/11/06 |
| 4.1.2 | Daily startup/shutdown | 11/11/06 |
| 4.1.3 | Monthly checklist | 11/11/06 |
| 4.1.4 | Semi-Annual checkout | 11/11/06 |
| 4.1.5 | Annual checklist | 11/11/06 |
| 4.2.1 | Thermal power calibration | 11/11/06 |
| 4.2.2 | Area radiation monitor calibration | 11/11/06 |
| 4.2.3 | Water radioactivity monitor calibration | 11/11/06 |
| 4.2.4 | Continuous air monitor calibration | 11/11/06 |
| 4.2.5 | Control rod calibration | 11/11/06 |
| 4.3 | Handling special nuclear material | 11/11/06 |
| 4.3.1 | Storage | 11/11/06 |
| 4.3.2 | Movement of fuel - general requirements | 11/11/06 |
| 4.3.3 | Movement of fuel - approach to criticality | 11/11/06 |
| 4.3.4 | Annual fuel inventory | 11/11/06 |
| 4.4.1 | Control rod removal and inspection | 11/11/06 |
| 4.4.2 | Rod drop time | 11/11/06 |
| 4.5 | Plant operations auxiliary equipment Maintenance | 11/11/06 |
| 4.5.1 | Guideline for Changing of Ionex Resin in Reactor Purification Skid | 11/11/06 |
| 4.5.2 | Instructions For Changing The Filters In The TRIGA Water Treatment System | 11/11/06 |
| 4.5.3 | Maintenance | 11/11/06 |
| 4.5.4 | Checking the operation of Roof access alarms | 11/11/06 |
| 4.5.5. | Channel Test of the Pool Water Level Alarm | 11/11/06 |

| | | |
|---|---|---|
| 4.5.6 | Channel test of the continuous air monitor | 11/11/06 |
| 4.6.1 | Start up and Shut down | 11/11/06 |
| 4.6.2. | Removal and placement of samples in the Lazy Susan | 11/11/06 |
| 4.7.1 | Wipe test and radiation surveys | 11/11/06 |
| 4.7.2 | Waste disposal for the NAA group | 11/11/06 |
| 4.7.3 | Burn-up calculations | 11/11/06 |
| 4.8.1 | Emergencies | 11/11/06 |
| 4.8.2 | Abnormal Operating Events | 11/11/06 |
| 4.8.3 | Reporting | 11/11/06 |

### L.3.1. Daily Prestart Checkout

Bold-faced and underlined comments refer to Technical Specifications requirements.

The PRESTART CHECKOUT procedure must be performed each day the reactor is operated before the STARTUP procedure is performed. The results of the PRESTART CHECKOUT procedure may be printed on the reverse side of the DAILY CHECKLIST (attached).

Press the PRESTART CHECKS RUN button at the reactor console and follow the directions on the status screen concerning the movement of the source in the reactor. The computer will perform the following tests:

| | |
|---|---|
| Log channel | Channel test |
| Source inhibit | Interlock test |
| NM1000 | Rate scram test |
| NM1000 | Power level scram test |
| NPP1000 | Power level scram test |
| NPP1000 | High voltage failure scram test |
| Watchdog | Timeout scram test |

The results of the PRESTART CHECKOUT procedure may be printed on the reverse side of the DAILY CHECKLIST; documentation of successful completion of the PRESTART CHECKOUT is documented on the DAILY CHECKLIST.

The channel test for the log channel may also be performed at the terminal of the NM1000. Each of the calibration points for the NM1000 system (three in the count rate region, two in the Campbell region) may be read out on this terminal and compared with previously-established points. This alternate procedure may be used whenever the normal calibration points have not been properly entered in the EPROM memory, such as after maintenance or recalibration of the NM1000 channel. At such times the new calibration points must be burned into new EPROM chips by the manufacturer and sent to Dow for installation.

These tests must be performed every day that the reactor is operated.

### L.3.2. Daily start-up/ shutdown

The STARTUP checklist is to be used each day the reactor is operated before any other operation of the reactor. The start-up check list contains the following information.

Heading: Date, Operator, List Number

Record the current date, the name of the operator performing the startup checklist, and the sequential list number.

Prestart Checks Complete
The prestartup checks which are run through the CSC console must be successfully completed prior to operating the reactor. The tests are run by depressing the Prestart button on the console. Respond to removing add inserting the neutron source as directed on the display screen. A summary of the check may be printed out on the back of the daily checklist. A positive response indicates that the prestart checks were successfully completed. Any other response indicates that the safety channels are not operable and this condition should be reported to the reactor supervisor or assistant reactor supervisor. The reactor safety channels and interlocks shall be operable in accordance with table 3.3A.

Confinement:

Check the HVAC inlet into the reactor room and the exhaust from the reactor room using an appropriate sensor, which could include, among others, flags on the ductwork, air pressure gauges, or readouts of switches on the Status Screen. Check the condition of Door 10. If the HVAC systems are operating and Door 10 is closed during the startup checkout then these conditions are assumed to hold for the rest of the operating day unless observations show otherwise. These conditions must hold whenever the reactor is operating, fuel is being handled, or radioactive materials with the potential of airborne releases are being handled.

Pool Water
a. Pump

The pump is deemed operable if the operator observes the pump operating and if the primary side pressure at the entrance to the heat exchanger is more than 7 psig. The typical pressure when the pump is operating is 8 to 9 psig. The water radiation monitor, normally located in a side stream of primary water provided by the pump, must be monitored during normal operation of the reactor.

b. Conductivity

Record the conductivity reading from the conductivity gauge readout at the console or an equivalent conductivity meter. The typical conductivity is 0.8 to 1.5 µMho/cm. If the conductivity exceeds 2.0 µMho/cm with the pool water at about 25 C then action must be taken to reduce the conductivity. This conductivity must not exceed 5 µmho/cm averaged over one month.

Demineralizer Flow

Record the reading of the flow meter (located in the water treatment room) in the water purification loop. The flow should be in the range of 5 to 7 gallons per minute.

Filter Pressure: Before, After

Record readings of the pressure gauges (located in the water treatment room) before and after the line filter in the water purification loop. The typical pressure before the filter is about 17 psig and a pressure drop here of about 6 psig indicates a need to change the filters.

Lazy Susan
a. Operational

Check the mechanical and electrical components of the lazy susan by operating the lazy susan by hand and using the motor drive, in both directions. A negative entry indicates the need for maintenance .

b. Sample Request #s

Record the sample request number(s) of samples in any sample facility of the reactor.

Tank Condition

Look at the contents of the reactor and ensure that there are no abnormal situations. Any other entry indicates that maintenance or repair may be required - use the COMMENTS section below to explain this type of entry.

Water Level
Look at the level of water in the pool and determine that the level is adequate for operation of the reactor. There must be a minimum of 15 feet of water over the core of the reactor.

Flow Meter Reading
Record here the flow meter reading, which is inline with the pool makeup water line. This reading should be taken after addition of water to the pool.

Water Added

A positive response indicates that de-ionized water was added to the primary coolant system.

Portable Radiation Monitor

Enter here the model number of an ion chamber portable radiation monitor which is available for checking radiation levels.

Area Radiation Monitor
a. Tested

Check the operation of the alarm circuit of the Area Radiation Monitor by placing a check source near the detector. This is a channel test and must be performed every day that the reactor is operated and at least weekly whether the reactor is operated or not.

b. Alarm Set

Enter here the alarm set point of the Area Radiation Monitor. Use the ALARM setting of the Area Monitor selector switch to determine this set point. This setting should be 2.0 mR/hr.

c. Background

Enter here the background radiation level indicated by the Area Monitor. This is typically in the range of 0.03 to 0.05 mR/hr when the reactor is not operating.

Air Monitor
a. Background

Enter here the background count rate indicated by the Continuous Air Monitor. The typical range is 20 to 300 cpm.

b. Filter Changed

Install a new filter in the Continuous Air Monitor.

c. New Background

Enter here the background count rate indicated by the Continuous Air Monitor after the filter change, after the system has reached electronic equilibrium but before the filter has reached equilibrium with the air (normally 5 to 15 minutes after the filter change). The typical range is 20 to 50 cpm.

d. Tested

Check the operation of the Continuous Air Monitor, the alarm set point, the light, the bell, and communication with the Dow Security dispatcher by applying a radioactive source which will activate the alarms and noting the responses. This task must be performed each day the reactor is operated and at least weekly whether the reactor is operated or not.

e. Alarm Set Level

Enter here the alarm set point of the Continuous Air Monitor as determined by observation. This alarm set point should be 4000 cpm.

Rod Interlock
Check the Rod Interlock circuit by enabling the control rod magnet circuits and attempting to raise two or more control rods simultaneously using the control rod UP drive switches. Each of the three combinations of two rods is to be checked. None of the control rods should move during this check. The check includes a check of the operability of the control rod drives - raise each control rod separately. This task must be performed each day that the reactor is operated.

Rod Withdrawal Prohibit
Check the Rod Withdrawal prohibit circuit by first enabling the control rod magnet circuits; next rotate the Scram Test Switch to Percent 2. While depressing the 'UP' pushbutton on one of the shim or control rods, depress the test button located below the Scram Test Switch. Observe that the Rod Prohibit warning message appears in the Warning window. Observe that the rod position indicator stops changing after the warning message appears. Acknowledge the warning message. This task must be performed each day that the reactor is operated.

Wide-Range Linear/NM-1000
Enter here the power level indicated by the Wide-Range Linear/NM-1000 channel at source level. The typical value of this level is 1-2 milliwatts.

Wide-Range Log/NM-1000
Enter here the power level indicated by the Wide-Range Log/NM-1000 channel when the neutron source is inserted in the core and the reactor is shut down. This level should be in the range of 0.2 to 0.9 X 10-6 %, with a typical value of 0.4 X 10-6%.

Scram Circuits
Indicate here which of the three control rods (SHIM1, SHIM2, and REG) has been used for each of these scram circuit tests. Use each control rod at least once during these tests. For each test, enable the control rod magnet circuits, raise one or more of the control rods, initiate the scram, and observe the successful completion of the scram sequence.

SHUTDOWN
This portion of the daily checkout is to be performed before the last licensed operator leaves the building at the end of the day.

Key Removed and Secure

The key is in the locked storage area.

Air and Area Monitors Operating

A non-zero reading for each of these monitors indicates that they are operating. An affirmative entry indicates that the monitors are operating; any other response should be explained in the COMMENTS section.

Secondary Water (On/Off)

ON or OFF - indicates whether water is flowing in the secondary system.

Visual Inspection of the Tank

Look at the contents of the reactor to ensure that there are no abnormal situations. A negative entry indicates that maintenance or repair may be required - use the COMMENTS section below to explain this type of entry.

Rods Down
Look at the connecting rods and determine that the control rods are all fully inserted. This observation should agree with the rod position indicators on the Status Screen and the display screen. A negative entry indicates that steps must be taken to correct this situation.

Request Form #s

Enter here the request form number(s) of any samples in any sample facility of the reactor.

Door Bolted

Bolt the reactor room East door (Door 10).

Lazy Susan

OFF - The lazy susan drive system must be shut off.

Comments
Enter here information about abnormal conditions, equipment malfunctions, and any information which would be useful to the person who performs the next daily startup.

Date/Time/Operator

The operator who performs the shutdown checkout will enter these items.

Reviewer

A licensed senior reactor operator will review this checklist and sign here. The intent of the review process is to assure that the checkouts have been performed. The reviewer should not be the same person performing the checkout, unless he is the only person qualified to do so. Generally, however, independent review of the checkouts by a qualified person is desirable and expected.

### L.3.3. Monthly Checklist

Task 1 – Area Monitor
a. Select an appropriate Cs-137 source and enter its ID on the checklist
b. Place the check source in the middle of the box defining the detector location
c. Allow the meter to come to equilibrium and note the reading on the checklist
d. Confirm operability by comparing the reading to the previous month. A variation greater than +/-10% requires investigation and/or repair.

Task 2 - Control Rods
a. Record positions of the three control rods when they are fully inserted.
b. For one control rod at a time: determine the time required to fully withdraw the rod, the rod position when fully withdrawn, and the time required for the rod to drive fully into the core from the fully withdrawn position.
Task 3 - Flux Controller
a. Take the reactor to critical at about 5 watts.
b. Set the 'Power Demand' switches to 250 watts.
c. Make an entry in the logbook for a change of power level.
d. Place the reactor in the 'Automatic' mode.
e. Observe and record the minimum period during the change of power level.
f. Permit the reactor to come to equilibrium. Record the power level and complete the logbook entry.
g. Make an entry in the logbook for a change of power level.
h. Change the power demand switches to 1000 watts.

i. Permit the reactor to come to equilibrium. Record the power level and complete the logbook entry.
j. Return the reactor to 'Manual' mode.
k. Continue operating or secure the reactor.

Task 4 - Evaluation of the Period Circuit
a. Make an entry in the logbook for a change of power level if necessary.
b. Take the reactor to critical at about 5 watts.
c. Make an entry in the logbook for a change of power level.
d. Put the reactor on a steady period of about 20 seconds.
e. Measure and record the time required for the reactor power to increase by a factor of 1.5. This time should equal 8.1 seconds for a 20 second period.
f. Secure the reactor and complete the logbook entry.

### L.3.4. Semi-Annual Checkout

The semi-annual checkout consists of tasks which must be performed at least two times per year with no more than seven and one-half months between any two checks.

The procedures are defined, as parts of this chapter, as noted on the semi-annual checkout list, with the exception of the check of operation of smoke, vibration, motion and intrusion sensors in the reactor room and the control room.

Each of these sensors is tested by applying the appropriate stimulus at some time when the Security Dispatcher can respond to these tests. Usually this can best be done after normal working hours when there is no effect of other persons in the building. The sensors are described in the Security Plan which is not available to the public.

1. Calibrate the water activity monitor.
   (Procedure 4.2.3)
2. Calibrate the continuous air monitor.
   (Procedure 4.2.4)
3. Calibrate the area monitor.
   (Procedure 4.2.2)
4. Calibrate the control rods and calculate the shutdown margin.
   (Procedure 4.2.5)
5. Measure the rod drop times.
6. Check the operability of the motion and intrusion sensors in the reactor room and the control room Change the access codes for the radiation labs.
7. Check the operability of the roof access alarm system.
   (Procedure 4.5.4)

### L3.5. Annual checkout

The tasks listed on the annual checklist must be performed at least annually with no more than 15 months between performances.

1. Visually inspect each fuel element. Look for bend, growth,

2. Thermal power calibration (Procedure 4.2.1)

3. Control Rod Inspection (Procedure 4.4.1)

4. Security Plan and Emergency Plan reviewed

5. Change the locks and keys for the reactor room

### L3.6. Thermal Power Calibration

Cool the pool water to 10 -15° C and let it come to equilibrium overnight. Start the reactor and operate without pool water circulation at an indicated power level of about 200 kilowatts. Take temperature readings at about ten-minute intervals for about two hours. Plot the date and determine the slope

$$m = \frac{\Delta Temp}{\Delta Time}$$

From the slope of the straight part of the time-temperature curve calculate the power level by

$$P(kW) = \frac{m}{0.0499}$$

Adjust the positions of the neutron detectors until the channel outputs agree with the calculated power level for both the NM1000 and the NPP1000.

### L3.7. Area Monitor Calibration

a. Place a 137Cs source of known activity, about 10 mCi, preferably NIST-traceable, at a known distance, about 1 meter, from the Area Monitor detector.

b. Compare the reading of the Area Monitor with the dose rate expected at that distance from that source, using the relation

$$Dose(mR/hr) = \frac{6 \cdot C \cdot E}{R^2}$$

where

C is the activity of the source in mCi, E is the total energy of the gamma-rays from each decay, in MeV, and R is the distance from the source to the center of the detector, in feet.

For a 137Cs source (E=0.661 MeV) at 1 meter the relation becomes

$$Dose(mR/hr) = 0.37 \cdot C$$

The dose rate from a [redacted] 137Cs source at 1 meter is thus expected to be [redacted] the dose rate expected from a 137Cs source of different strength is easily calculated. A reading on the logarithmic scale of the Area Monitor of ±25% of the calculated value indicates that the Area Monitor is properly calibrated.

## L3.8. Water Radioactivity Monitor Calibration

This sensor always responds to a background level of radiation, which is due to cosmic rays, residual radioactivity in the water, and radioactivity in the building construction materials. This background is about 10 to 30 counts per second. When the reactor is operating certain elements in the water can be activated to form radioactive materials, such as sodium, argon, nitrogen, aluminum, and iron. Operation of the reactor at full power for several hours results in a readily-observable increase in the radiation level as sensed by the Water Radioactivity Monitor, up to several hundred counts per second. This increase is normal and experience has shown that the radiation levels due to this activation are not hazardous.

The Water Radioactivity Monitor is intended to provide a signal when the radiation levels are higher than the normal operating levels, such as might be due to fuel element cladding failure or to contamination of the pool water by failed experiments. The Water Radioactivity Monitor count rate approaches 200 to 250 counts per second during normal operation after continuous operation of the reactor for several hours at the maximum power level. The reactor console screens display ALARM signals when the Water Radioactivity Monitor count rate exceeds 300 counts per second.

The Technical Specifications state that the amount of radioactivity in the pool water shall not exceed 0.1 µCi/mL. The volume of the pool is about 1.88 X 107 ml; thus nearly 2 Curies of radioactivity must be mixed with the pool water to achieve the maximum allowed level. This would correspond to the loss of fuel element cladding on about half of the fuel elements after operation of the reactor at 300 kilowatts for several weeks (this is based on the experimental data of F. C. Foushee and R. H. Peters, "Summary of TRIGA Fuel Fission Product Release Experiments, Gulf EES-A10801, 1971, and on "Credible Accident Analyses for TRIGA and TRIGA-Fueled Reactors", NUREG/CR-2387 (PNL-4028), S. C. Hawley and R. L. Kathren, March 1982, as discussed in the Dow TRIGA Reactor Emergency Plan (1986)).

In case of suspected contamination of the pool water with radioactive materials, as signaled by the Water Radioactivity Monitor, samples of the pool water will be taken and analyzed using liquid scintillation, total ß-counting, or some equivalent technique to determine the actual concentration of radioactivity.

Procedure

The CAM is equipped with an alarm set point such that a count rate above that level activates a loud bell and a flashing light, and also sends a signal through a dedicated telephone line to the desk of the Dow Security Dispatcher, a position which is manned at all times. The CAM is also equipped with a trouble sensor which sends a separate signal to the Dow Security Dispatcher if the GM tube fails to count, due to either some failure in the electronics or a loss of power.

Place a known radioactive source (NIST-traceable 204Tl, for example) into the CAM in place of the normal filter. The source is intended to mimic the radiation from expected fission products which could escape from the pool into the reactor room air.

Use the reading of the CAM and the known source strength to determine the efficiency of the GM tube. Compare this efficiency with that determined by the CAM manufacturer (NIST-traceable 90SrY source; efficiency about 34%). The efficiency using a 204Tl source is expected to be in the range of 30 to 35 percent. Measured efficiency in the range of 20 to 25 percent would indicate some degradation of the system; measured efficiency in the range of 15 to 20 percent would require repair or replacement of components.

CAM channel test

Read the count rate meter to determine the current count rate; this is typically in the range of 40 to 400 counts per minute. Enter this reading on the daily checkout sheet under "AIR MONITOR: BACKGROUND".

Remove the filter assembly. Check the alarm by inserting the source. The count rate should rise, triggering the alarm light, bell and telephone signal to the dispatcher. If this does not occur adjust or repair the alarm system. Replace the used filter and insert the filter housing into the unit. Verify the airflow and alarm set point.

Make the appropriate entries on the daily checkout form under "AIR MONITOR: FILTER CHANGED", "AIR MONITOR: TESTED", and "AIR MONITOR: ALARM SET LEVEL".

### L.3.9. Control Rod Calibration

The control rods are calibrated by using the control rods to insert reactivity in steps, determining the added reactivity using the observed period and the Inhour equation which relates period to reactivity, and creating calibration curves and tables from these data. The total reactivity worths of the control rods and the shutdown margin are determined from the calibration curves. The REGULATING rod is calibrated over its whole length and in the current configuration has a reactivity worth of about $1.10. The SHIM1 and SHIM2 rods each have a reactivity worth of about $3.00, but they cannot be calibrated over the whole length.

$$SM = WR + WSL - XS$$

where WR is the total reactivity worth of the REGULATING rod, WSL is the smaller of the reactivity worths of the SHIM rods, and XS is the core excess measured at about 5 watts.

### L.3.10. Handling Special Nuclear Material

All fuel and fueled devices not in the core of the reactor shall be stored in such a way that $k_{eff}$ shall be less than 0.8 under all conditions of moderation, and that will permit sufficient cooling by natural convection of water or air that temperatures shall not exceed the Safety Limit (Technical Specifications, 5.4. (Fuel Storage)). Radioactive fuel elements may be stored in the storage wells situated in the floor of the reactor room. No more than nineteen standard TRIGA fuel elements (or equivalent) may be stored in any one storage well. A minimum water shield of 5 feet shall be maintained above the fuel elements. The shielding plug of the well is to be locked and the key removed and safely stored whenever the well contains special nuclear material. Storage racks provide additional storage for fuel elements and are located on the side of the reactor tank. A minimum water shield of six feet shall be maintained above the storage racks when fuel is stored in those racks. The Reactor Operations Committee shall review and approve all proposals for storage of Special Nuclear Material in other locations and configurations. The Reactor Operations Committee must review and approve all proposals to move fuel before any fuel is moved.

### L.3.11. Annual Fuel Inventory

*Movement of the fuel elements must be performed in the presence of the Reactor Supervisor or a designated* Assistant Reactor Supervisor; this person may be one of those named above.

A fuel handler will announce the position of the fuel element to be moved. The first two fuel elements to be moved will be moved from the B or C ring of the core to the wall storage rack. The Operator will record, in red, *the movement of the fuel element: the position the element is moved from, the time of the movement, the serial* number of the element, the condition of the fuel element, and the position the element is returned to.

The fuel handling tool is placed upon the element to be moved. The assistant closes the handling tool grapple and holds it closed until the fuel handler orders it opened. The fuel handler raises the fuel element to within about four feet of the surface or until the dose rate at the surface, measured by the assistant with a radiation survey meter, does not exceed 10 mR/hr. The other fuel handler grapples the bottom rod fixture of the fuel element with the fuel grapple and pulls the rod up so that the element is nearly horizontal. The fuel handler

twists the fuel element, using the fuel element handling tool, so that all portions can be inspected and the serial number can be read from the triflute. The condition of the fuel element and the serial number are reported to the Operator and to the assistant. The Assistant checks the serial number against the number of the plaque from the wall chart of the core to verify the identity of the element.

About one-fourth of the fuel elements will be tested with the gauge in any one year so that every fuel element will be tested once in each four-year period.

After the fuel element has been examined the fuel handler then places the element in its new position, announcing that position to the operator and to the Assistant. The Assistant places the plaque on the appropriate position of the wall chart of the core. The fuel handler then directs the Assistant to release the handling tool grapple and the handling tool is removed from the element.

After the fuel handlers have removed two fuel elements from the B and/or C ring of the core the Operator attempts to measure the core excess at about 5 watts. If that core excess is less than $0.10 the remainder of the fuel inspection is allowed to take place.

When all fuel elements have been inspected, and while two fuel elements from the B or C ring are still in the wall storage rack, the fuel element gauge is removed from the pool, allowing the water to drip back into the pool. The gauge will be wipe tested, bagged, and labeled as POSSIBLE RADIOACTIVE CONTAMINATION before it is removed from the pool area. The wipe will be evaluated using the liquid scintillation technique (or equivalent). Results of the wipe test will be documented on the Annual Checklist (Procedure 4.1.5) If the wipe test shows removable contamination greater than 50 dpm (approximately 100 $cm^2$) then the gauge will be cleaned until wipe tests show less than 50 dpm removable radioactive contamination per wipe.

### L.3.12. Control Rod inspection and removal.

Control rods are removed and inspected as part of the annual inspection. Two elements are removed from the core and the core is verified subcritical. The control rods are disconnected, and individually removed and inspected for wear. After inspection the control rods are returned to the core location, reconnected and checked for operability. This procedure is 4.4.1. Prior to the reactor being returned to normal service the control rods are calibrated and core excess is verified.

### L.3.13. Plant operations and auxiliary equipment maintenance

L.3.13.1. Guideline for Changing of Ionex Resin in Reactor Purification Skid

Periodically the ion exchange resin needs to be replaced. After gathering the required equipment, the bed is isolated from the recirculation lines. The water resin slurry is drained into a bucket with a mesh screen to minimize the volume of waste. The water is returned to the line and the captured resin is placed in a waste drum. The bed is then filled with clean resin. The pump should be ran to remove trapped air and ensure no leakage. If the line is closed the system is returned to service.

L.3.13.2. Instructions For Changing The Filters In The TRIGA Water Treatment System

Equipment needed: 1 inch open-end wrench, portable radiation survey meter, two filter cartridges of 10 to 25-micron pore size, plastic bucket, and paper towels.

This is a line opening procedure. Michigan Division Safety Standard S-775 applies; Michigan Division R&D Safety Standard 7 does not apply. Protective equipment required: lab jacket, chemical workers goggles, and rubber gloves.

Procedure

1. Notify facility management of the line opening. This is an approved procedure; line opening permit or hot sheet is not required.

2. With the pump running close valve V4, then close valve V5. This isolates the filter with about 8-10 psig pressure.

3. Place the bucket under the filter.

4. Carefully loosen the nut at the top of the filter. The pressurized water in the filter will drain into the bucket. Lower the filter cartridges, barrel, end cap and center rod into the bucket making sure that all the water is caught.

5. Invert the filter housing over the bucket and remove the used filter cartridges; place the used filter cartridges in the bucket.

6. Measure the radioactivity of the used filter cartridges and assure they are safe to handle.

7. Insert two new filter cartridges in the filter housing and re-assemble the filter. Tighten the nut at the top of the filter carefully to compress the filter cartridges and engage the pressure seals at the top and bottom of the filter housing. Do not over-tighten; the seals will be damaged.

8. Dry the outside of the filter assembly to facilitate leak testing later.

9. Open valve V5. The downstream pressure of about 3-5 psig will force some water into the bottom of the filter holder allowing a low pressure leak test. If the filter holder leaks, adjust the nut or, after closing valve V5, replace the gaskets and start step 9 again. When the filter holder does not leak with valve V5 open proceed to step 10.

10. Open valve V4 slowly, observe bubbles in the flow meter.

11. Check for leaks. In the event of a leak, close V4 and retighten the housing. If there are no leaks, proceed to step 12.

12. Rapidly close and open valve V4. The surge of water will dislodge air bubbles trapped in the filter. Continue this until no air bubbles are observed in the flow meter.

13. Close valve V6 just upstream of the heat exchanger. The pressure at the filter will rise to about 32-35 psig. Check for leaks. If there are leaks, open V6, close V4 and V5 and repeat steps 9-13. If there are no leaks, proceed to step 14.

14. Open valve V6. Throttle the flow through the filter to no more than 7 gpm by partially closing valve V5. The system is now back in service.

15. Allow the used filters to dry. Then store them in the long-term radioactive waste for disposal

**L.3.14. Maintenance**

Maintenance on control or safety systems requires the presence of a licensed Senior Reactor Operator.

L.3.14.1. [redacted]

1. Introduction

When the reactor is operating in the beam tube mode a high radiation area can exist on the roof of the building, approximately in the center of the [redacted].

Access to the roof is controlled by administrative procedures. Persons wishing to go on the roof must secure a roof permit and all persons operating in the building must be notified before any access is permitted. Access will be denied if hazardous conditions exist on the roof.

[redacted]

2. Procedure - may be performed by one or more persons.

a. Do not perform this procedure while the reactor is operating.

[redacted]

c. Make sure that the helium pressure system is disconnected from the beam tube at the beam tube end.

d. Plug the helium pressure system so that the pressure sensor can be activated without applying helium pressure to the beam tube.

e. Apply 8-10 psig helium pressure from the cylinder in the console room. If you listen carefully you may hear the pressure switch operate in the console.

[redacted]

g. [redacted]

the REACTOR ON light should be flashing, and

the HIGH RADIATION - WHEN LIGHT IS FLASHING sign must be attached to the door where it can be seen by persons wishing to open the door.

h. Open the door. A loud pulsing sound should be heard, which does not stop when the door is closed.

i. Close the door.

j. [redacted]

k. [redacted]

l. [redacted]

m. [redacted]

n. Close the helium supply valves and open the bypass valve to allow the helium to escape from the pressure switch in the console.

o [redacted]

p. If any of these items do not operate as they should then

i. do not operate the reactor in the beam tube mode,

ii. notify the reactor supervisor,

iii. make arrangements to have the system repaired, and

iv. repeat this procedure until all items perform as intended.

L.3.14.2. Channel Test of the Pool Water Level Alarm

1. Remove the pool water level sensor from the pool.

2. Place the sensor such that both the gaps are free of water. The pool water low level annunciator should activate.

3. Place the sensor such that both gaps are immersed in water. The pool water high level annunciator should activate.

4. Replace the sensor in the reactor pool. The lower gap should be filled with water and the upper gap should be free of water if the pool water level is 16'1" ± 2" above the top of the core.

L.3.14.3 CHANNEL TEST OF CONTINUOUS AIR MONITOR (CAM)

a. Read the count rate meter to determine the current count rate; this is typically in the range of 40 to 400 counts per minute. Enter this reading on the daily checkout sheet under "AIR MONITOR: BACKGROUND".

b. Remove the filter assembly. Check the alarm by inserting the 234Pa $0.8 \times 10^{-5}$ mCi source. The count rate should rise, triggering the alarm light, bell and telephone signal to the dispatcher. If this does not occur adjust or repair the alarm system.

c. Remove the 234Pa source. Acknowledge the alarm. The bell and light should stop and the light should stop when the count rate meter is no longer above the alarm set point.

d. Put a new filter on the filter holder. Discard the old filter.

e. Install the filter holder and lock it in place.

f. Read the air flow indicated by the rotameter. The air flow should be between 30-40 liters per minute (lpm); if it is outside this range, adjust or repair the air flow system.

g. Remove the protective cover from the air inlet. Block this inlet. The air flow, indicated by the rotameter, should be zero lpm; if not, the system is leaking air. Adjust or repair the air flow system.

h. Set the alarm level to 1000 counts per minute (cpm).

j. Replace the protective cover on the air inlet. Make the appropriate entries on the daily checkout form under "AIR MONITOR: FILTER CHANGED", "AIR MONITOR: TESTED", and "AIR MONITOR: ALARM SET LEVEL".

i. Read the count rate meter to determine the minimum count rate with the new filter. This is typically less than 50 cpm. Enter the observed count rate on the daily checkout sheet under "AIR MONITOR: NEW BACKGROUND".

### L.3.15. Placement and removal of samples from the Rotary Specimen Rack

1. Only licensed Reactor Operators or Senior Reactor Operators, or persons working under the direction of and in the presence of licensed Reactor Operators or Senior Reactor Operators, are allowed to place samples in the reactor or retrieve samples from the reactor.

2. Appropriate written authorization must be prepared and signed before any samples can be placed in the reactor. Use the TRIGA ACTIVATION REQUEST FORM (see Procedure 3.3.5).

3. Place the samples in the appropriate Lazy Susan containers. These can be single-height or double-height, and each can contain one or more separate samples.

4. Do not carry the samples through the reactor control room. Use the pass-through in the hood of the preparation room to take samples into the reactor room.

5. Place the Lazy Susan containers with the samples in the Lazy Susan. Record the Lazy Susan sample position on the TRIGA ACTIVATION REQUEST FORM.

6. Turn on the Lazy Susan drive motor if flux averaging is desired.

7. After the required operation of the reactor place a radiation monitoring instrument near the sample port on the bridge. As each sample is removed from the Lazy Susan check the radiation level with the Lazy Susan container in contact with the sensitive portion of the radiation monitoring instrument. Samples which are too radioactive to be readily handled may be stored in the Lazy Susan or in some shielded area at the discretion of the operator.

8. Do not carry radioactive materials from the reactor room into the reactor control room. Use the pass-through to take the materials directly to the hood in the preparation area.

9. Transfer the samples to the authorized experimenter and record this transfer on the TRIGA ACTIVATION REQUEST FORM.

10. Complete the RECORD OF IRRADIATION, enter the dose rate of each sample on the TRIGA ACTIVATION REQUEST FORM and prepare the form for return to the experimenter for completion of the DISPOSAL section.

## L.3.16. Wipe tests and Surveys

Wipe tests and radiation surveys shall be taken regularly in specified areas in order to ensure that radiation fields and radioactive contamination shall be kept at levels as low as reasonably achievable. General radiation surveys and wipe tests shall be performed and documented monthly for those areas covered by the TRIGA Facility Isotope User's Approval. During use of radioactive isotopes in experiments not covered by the TRIGA Facility Isotope User's Approval the radiation surveys and wipe tests shall be performed at least monthly and at the conclusion of the project. Radiation surveys shall be made with a properly calibrated ionization chamber instrument. The instrument identification and serial number shall be documented in the report. Wipe tests shall be performed using materials which can be placed in a container for counting. Wiped areas should be approximately 100 cm2; if larger areas are to be tested multiple wipes should be taken. The reports shall be kept on file with the TRIGA records and a summary shall be prepared quarterly for review by the Radiation Safety Committee.

## L.3.17. Procedure for disposal of Radioactive waste

Purpose - To establish an approved procedure for disposal of non-radioactive and radioactive waste generated during activation of industrial and research samples at 1602 Building.

Waste Definition - Non-radioactive - gloves, paper towels, excess samples, etc. used in the general area and/or in handling radioactive materials which do not become contaminated.

Temporarily radioactive - Activated samples which will decay in a given time period to a non-radioactive sample (less than fifty disintegrations per minute).

Radioactive - Samples with long radioactive half-life (separated into two categories - liquid or solids).

Disposal Procedure

Non-radioactive - Use established procedures for normal waste, i.e. burner disposal. It is the experimenter's responsibility to determine if waste is non-radioactive.

Temporarily radioactive - The half-life of all radioactive species in this waste category must not exceed fifteen (15) days. Small fiber packs will be furnished in the accelerator room for disposal. Each fiber pack will be classified by a specific number and a waste sample log sheet. When the fiber pack is full, it will be sealed, dated, and the waste sample log sheet attached to it. After 150 days (ten half-lives, 99.9% complete decay), the radioactive labels and waste sample log sheet will be removed. The fiber pack will be surveyed with a Geiger counter (no detectable activity) and sent to the burner for disposal.

Radioactive - If the half-life of any species in the sample exceeds 15 days, it is classified as radioactive waste. Two separate disposal systems are necessary.

Solid radioactive wastes - These samples will be deposited in an approved steel drum located in the accelerator room. Type of radioactive isotope and quantity will be recorded on waste sample log sheet. Once the drum is filled, it will be sealed and Health Physics personnel will be notified for proper disposal.

Liquid radioactive - All liquid samples must first be removed from the polyethylene vials (vials deposited in steel drum). The liquid must be solidified, i.e. polymerization, evaporation, etc. (consult with Health Physics). Once this is accomplished, the solid sample can be disposed of as a solid radioactive waste.

Records of Waste Control

For this system to succeed, it is imperative that accurate and current information be maintained. When samples are to be activated, waste disposal methods should be recorded on the reactor activation request form. If the

sample is classified as temporarily radioactive, then decay is the intended method of disposal. If the samples contain radioactive species, the wastes will be transferred to a facility that is licensed to dispose of these types of waste. When depositing samples into the respective disposal drums, sample information must be entered on the waste sample log sheet.

Responsibilities

It is the responsibility of the experimenter and senior reactor supervisor to determine the classification of waste generated in the neutron activation area. All radioactive isotopes must be recorded properly on the reactor activation request forms. Waste sample log sheets and disposal records should be current.

Proper disposal of liquid radioactive waste must be maintained.

### L.3.18. Burn-up calculation

Uranium-235 is lost by two mechanisms in this reactor:

1. by nuclear fission and

2. by conversion to uranium-236 by capture of neutrons.

We expect 3.2 X $10^{10}$ fissions per watt-second, assuming that the fast fissions of 238U produce as much energy as the thermal fissions of 235U. There are .068 fast fissions of 238U for each fission of 235U in the fuel of the Dow TRIGA Research Reactor.

There are thus 1.08 X $10^{20}$ 235U fissions per megawatt-hour.

Only 85% of the 235U nuclei that capture thermal neutrons fission; the rest are converted to 236U. The net burn-up of 235U is then

(1.08/0.85) X $10^{20}$ atoms per megawatt-hour, or

0.050 grams of 235U per megawatt-hour of operation.

Uranium-238 is removed from the fuel at this reactor by three mechanisms:

1. by fast fission,
2. by resonance capture of energetic neutrons, and
3. by capture of thermal neutrons.

Using the fast fission factor (0.068) we calculate that the fission of 238U uses 0.07 X $10^{20}$ atoms per megawatt-hour.

Using the resonance capture escape probability (0.9356) and the fission yield (2.43 neutrons per fission) we calculate that the resonance capture of neutrons uses 0.18 X $10^{20}$ atoms per megawatt-hour.

Using the values of [redacted] of 238U in the core, an average neutron flux of 1.8 X $10^{13}$ neutrons per $cm^2$ per second per megawatt, and a thermal neutron cross section of 2.73 X 10-24 cm2 per atom, we calculate that the capture of thermal neutrons uses 0.05 X $10^{20}$ atoms per megawatt-hour.

The total burnup of 238U is then

0.30 X $10^{20}$ atoms per megawatt-hour or

0.012 grams per megawatt-hour, and

the total burnup of uranium is

0.062 grams per megawatt-hour.

### L.3.19. Emergencies

a. The reactor operator shall secure the reactor during any emergency. The operator shall then follow the provisions of the 1602 Building Emergency Plan or the TRIGA Emergency Plan.

b. If the emergency includes release of airborne radioactive material within the reactor room the operator may choose to shut down the reactor room vent system and the air handler serving the reactor room and associated areas.

c. The reactor operator shall report emergencies to the Reactor Supervisor or designated alternate.

L.3.19.1. *Abnormal Operating Events*

a. The operator shall secure the reactor at any indication of abnormal operating events.

b. The reactor operator shall report abnormal operating events to the Reactor Supervisor or designated alternate.

L.3.19.2. Reporting

a. Any emergency which affects the operation of the reactor shall be documented and reported to the ROC.

b. Any emergency involving spills, loss, or release of radioactive material shall be documented and reported to the Reactor Operations Committee, the Radiation Safety Committee, and the Radiation Safety Officer.

c. Any emergency classified

as Notice of unusual event shall be reported to the US Nuclear Regulatory Commission duty officer, Region III, 708-790-5500.

## L.4. Required Actions

Two scenarios initiate required actions by the ROC. The situations are in the case safety limit violations and in the case of a reportable event. These situations are addressed separately.

### L.4.1. In case of a Safety Limit Violation

a. the reactor shall be shut down until resumed operations are authorized by the US NRC; and

b. the Safety Limit violation shall be immediately reported to the Facility Director or to a higher level; and

c. the Safety Limit violation shall be reported to the US NRC in accordance with technical specification section 6.6.2.; and

d. a report shall be prepared for the ROC describing the applicable circumstances leading to the violation including, when known, the cause and contributing factors, describing the effect of the violation upon reactor facility components, systems, or structures and on the health and safety of personnel and the public, and describing corrective action taken to prevent recurrence of the violation.

### L.4.2. Reportable Occurrence

a. reactor conditions shall be returned to normal or the reactor shall be shut down; if the reactor is shut down operation shall not be resumed unless authorized by the Facility Director or designated alternate; and

b. the occurrence shall be reported to the Facility Director and to the US NRC as required

c. the occurrence shall be reviewed by the ROC at the next scheduled meeting.

## L.5. Reports

Two types of reports are required. These reports are defined as the annual operating report and special reports.

### L.5.1. Operating Reports

A report shall be submitted annually, starting with the first quarter 1991 performance of annual tasks, to the Radiation Safety Committee and to The Document Control Desk US NRC, Washington, DC, with a copy to the Research Reactor Administrator, US NRC Washington DC, which shall include the following:

a) status of the facility staff, licenses, and training;

b) a narrative summary of reactor operating experience, including the total megawatt-days of operation;

c) tabulation of major changes in the reactor facility and procedures, and tabulation of new tests and experiments that are significantly different from those performed previously and are not described in the Safety Analysis Report, including a summary of the analyses leading to the conclusions that no unreviewed safety questions were involved and that 10 CFR 50.59 (a) was applicable;

d) the unscheduled shutdowns and reasons for them including, where applicable, corrective action taken to preclude recurrence;

e) tabulation of major preventive and corrective maintenance operations having safety significance;

f) a summary of the nature and amount of radioactive effluents released or discharged to environs beyond the effective control of the owner-operator as determined at or before the point of such release or discharge (the summary shall include to the extent practicable an estimate of individual radionuclides present in the effluent; if the estimated average release after dilution or diffusion is less than 25% of the concentration allowed or recommended, only a statement to this effect is needed); and

g) a summary of the radiation exposures received by facility personnel and visitors where such exposures are greater than 25 % of those allowed or recommended in 10 CFR 20.

### L.5.2. Special Reports

a. *There shall be a report to US NRC Research Reactor Administrator, US NRC Washington DC not later than* the following working day by telephone and confirmed in writing by telegraph or similar conveyance to The Document Control Desk, US NRC, with a copy to the Research Reactor Administrator, US NRC Washington DC, to be followed by a written report that describes the event within 14 days of:

a. violation of the Safety Limit; or a reportable occurrence

b. There shall be a written report presented within 30 days to The Document Control Desk, US NRC, with a copy to the Research Reactor Administrator, US NRC Washington DC, of: permanent changes in the facility staff involving the reactor supervisor or the facility director; or significant changes in the transient or accident analysis report as described in the Safety Analysis Report.

c. A written report shall be submitted to The Document Control Desk, US NRC, with a copy to the Research Reactor Administrator, US NRC Washington DC, within 60 days after criticality of the reactor under conditions of a new facility license authorizing an increase in reactor power level, describing the measured values of the operating conditions or characteristics of the reactor under the new conditions.

## L.6. Records

The following records shall be kept for a minimum period of five years:

a. reactor operating logs;

b. irradiation request sheets;

c. checkout sheets;

d. maintenance records;

e. calibration records;

f. *records of reportable occurrences;*

g. fuel inventories, receipts, and shipments;

h. minutes of ROC meetings;

i. records of audits;

j. facility radiation and contamination surveys; and

k. surveillance activities as required by the Technical Specifications.

Records of the retraining and requalification of Reactor Operators and Senior Reactor Operators shall be retained for at least one complete requalification schedule.

The following records shall be retained for the lifetime of the reactor:

a. records of gaseous and liquid radioactive effluents released to the environment;

b. records of the radiation exposure of all individuals monitored; and

c. drawings of the reactor facility.

## L.7. Emergency Planning

The reactor maintains a separate detailed emergency plan that has been submitted to the NRC dated July 27, 2007. A global overview of the interface follows.

[redacted]

## L.8. Security Planning

The reactor maintains a separate detailed security plan that has been accepted by the NRC.

## L.9. Operator Training and Requalification

Operator training and requalification plans are designed to meet the language and intent of 10 CFR 55 and 10 CFR 19.

Training takes place on an as need basis whereas requalification is completely annually.

The Dow TRIGA Research Reactor requalification program is included in its entirety in this section.

All licensed reactor operators and senior reactor operators of the Dow TRIGA Research Reactor shall participate within each calendar year in a Reactor Operator Requalification Program consisting of the following parts:

A. A series of lectures following closely the material covered in the up-to-date version of the Instruction Manual for the Dow TRIGA Research Reactor facility on the following subjects:

1. Physical layout of the facility and specific operating characteristics, and changes of the facility during the preceding 12 months.

2. Reactor instrumentation, control and safety systems.

3. Administrative procedures; Plant Protection systems; emergency procedures, technical specifications, changes in the technical specifications during the previous 12 months.

4. Operating procedures, normal, abnormal and emergency. Changes in operating procedures which became effective during the previous 12 months.

5. Radiological safety; 10 CFR 20 and other items of Title 10.

6. Reactor physics, theory.

The lectures shall be given by one or more persons holding senior reactor operator licenses for the facility or have similar qualifications for the subject they are covering.

B. A 1 to 2 hour "walk through the facility" with discussion led by the reactor supervisor.

C. A simulated emergency situation with evacuation exercise.

D. The above parts of the program shall be followed by a written examination containing at least 12 questions which can be answered in approximately two hours and will demonstrate the familiarity of the operator with the subjects covered.

E. All operators shall participate in the yearly check of the facility: the annual fuel inspection, the inspection and recalibration of the control elements.

F. Each operator shall attend at least one of the quarterly meetings of the Reactor Operations Committee within each calendar year.

G. Each licensed operator shall operate the reactor at least once every 120 days and shall perform a minimum of ten reactivity changes during each calendar year.

The results of the requalification program shall be evaluated by the reactor supervisor and his designated alternate. Appropriate records including the scored written examination, documentation of requirement (G) above, etc., for each operator shall be kept by the facility.

Operators who were unable to obtain a passing grade in the written examination [Item (D) above] shall be offered an accelerated review/training program set up to meet the individual's need by the reactor supervisor. This remedial program will be concluded by a two hour oral examination in the form of a walk through the facility administered by the reactor supervisor and a second licensed senior reactor operator of the facility. Reports on the type of remedial program given and the evaluations made during the oral examination shall be kept in the individual's file at the facility.

Licensed operators who have not been able to meet Item (G) above will be given a brief updating course by the reactor supervisor which shall include a two hour walk through the facility, a review of the state of the facility including recent changes in design, instrumentation, operating procedures, technical specifications, and other items pertaining to the facility and its operation. Satisfactory completion of the update including a certification of the readiness of the operator to resume his duties shall be documented by the reactor supervisor and the certification document shall be placed in the operator's file in the facility prior to resumption of reactor operation by the individual.

### L.10. Start-up Plan

The procedure for start up will be used for any change in core configuration or power level. There is no need for a separate or additional start–up plan for the relicensing of the Dow TRIGA Reactor.

### L.11. Environmental Report

The reactor has been in place for over 40 years. Capital costs are limited to the requirements of replacing and upgrading of equipment and instrumentation. Operational costs are covered within the Analytical Sciences division. The benefits accrue for the use of the facility as an analytical tool, irradiation facility and isotope production facility, each serving a wide range of Dow research and production groups. The risk to the environment is negligible due to the low power, low enriched fuel and proactive control of radioactive material. The Dow Chemical Company has deemed the research reactor as an essential part of its business plan. Environmental Report Dow TRIGA Research Reactor 2008 is included separately with this application.

## M. ACCIDENT ANALYSIS

### M.1. Accident – Initiating Events and Scenario

Several types of hazards have been evaluated with respect to the operation of the TRIGA reactor. The evaluations are reported in the original Safety Analysis Report for the Dow TRIGA Research Reactor (1966). A more recent study of accidents is reported in NUREG/CR-2387, "Credible Accident Analyses for TRIGA and TRIG Fueled Reactors", S. C. Hawley and R. L. Kathren, 1982.

Accident initiating events include mechanical failure of structure, control systems, weather, operator error, or malicious intent. The consequence of each event is evaluated for radiological impact.

The basic assumptions used in these evaluations include

a) the operation of the reactor at maximum allowable power level for an indefinite period of time to permit the buildup of the maximum inventory of radioactive fission products; and

b) operation of the reactor by qualified individuals who are trained on the detection and evaluation of radiation hazards.

The events considered in this safety analysis report are

1. Loss of coolant

2. Reactivity insertions

3. Fuel cladding failure

4. Natural phenomena

5. Man- made phenomena

### M.1.1. Loss of Coolant

A major function of the deionized water in the reactor well is to serve as a biological shield, protecting people from the effects of the high levels of radiation associated with the operation of the reactor. Loss of this water can occur through one of three possible mechanisms: the water may be pumped or siphoned from the tank, evaporation of the water, and tank failure.

Siphoning

The pipes through which the water is pumped to the water treatment system and back into the pool are each equipped with holes drilled through the piping at a level about 12 inches below the normal level of the water, or about 15 feet above the top of the core. These holes serve to break any siphon action so that the pool cannot be drained below this level accidentally due to a break in these pipes.

Evaporation

The Dow TRIGA Reactor is designed to cool with natural convection. The cooling system is not required for continuous operation. For the core operating at 300 kW the amount of time required to evaporate the water in the well is 17 hours (assuming the water is at the boiling point). In this amount of time an emergency cooling/ shielding can be set up.

Tank Breach

The aluminum tank liner was designed and thoroughly tested to insure tightness against leakage. However, a large break in this tank and the associated concrete liner surrounding it, no matter how induced, could lead to a leakage of water from the pool. The level of water in the pool would descend to the level of water in the surrounding soil which has been observed to exist at somewhat less than eight feet below the surface of the surrounding soil (NAVD-1929). At this point the water in the pool would not drain any further, leaving about seven or more feet of water covering the core. For a 2 $m^2$ breach the exit flow rate $2.8 \times 10^{-4}$ $m^3/s$ and the tank level will drop at 0.33 meter per hour. The tank will come to equilibrium with the ground water in 7 hours.

The radiological hazard associated with the loss of shielding water for the 300 kW configuration of the Dow TRIGA Research Reactor, using the assumptions concerning history of reactor operation given at the head of this section are in the Table 7. At time = 0 the reactor is shut down from an infinitely long run at 300kW. The reactor is on a - 80 second period.

Table 7. Radiation Doses as water level is dropping and reactor is on a shutdown period.

| Time after shut down - hours | Height above core in meters | Dose rate mR/hr |
|---|---|---|
| 0 | 5.6 | 46 |
| 1 | 5.3 | 2.0 |
| 2 | 5.0 | 3.0 |
| 4 | 4.3 | 0.9 |
| 6 | 3.6 | 0.01 |
| 8 | 3.0 | $1.2 \times 10^{-4}$ |

This would permit sufficient time to view the interior of the tank and have emergency repairs made.

For persons outside the one-story reactor laboratory building the radiation from the unshielded core would be collimated upward by the shield structure and would not give rise to a public hazard.

### M.1.2. Reactivity Insertion

Insertion of positive reactivity results in a rapid change in power level. The limiting parameter for safety is fuel temperature. Gulf Atomics has shown through experimentation that the maximum fuel temperature will be reached prior to maximum temperature in for the cladding. Calculations were made to estimate the temperature rise in the central TRIGA fuel element if the cooling water were lost instantaneously. The calculations were made in a very conservative manner in order to give an upper limit estimate of the fuel-cladding temperature. The assumptions made are as follows, in addition to the operating assumptions made previously:

1) No account has been taken of any heat-removal mechanism other than natural convection of air through the core. This neglects conduction of heat to the grid plates and to the other mechanical structures of the reactor.

2) It is assumed that no heat is removed until the fuel element cladding has reached a temperature sufficient to transfer heat at a rate equal to the power production in the fuel elements.

3) The specific heat of the element has been assumed to include only that of the uranium-zirconium hydride section and the heat capacities of the graphite and end-fittings of the fuel element have been neglected.

4) The cooling water is lost instantaneously, with no water droplets remaining on the cladding.

5) The water is lost completely from the core.

6) The "stack" height for producing the driving force for convection is assumed to be only the length of the core, neglecting any "stack" effect due to warm air above the core region.

The calculations show that the maximum fuel-element temperature following an instantaneous loss of water would be less than 307 degrees C. If a more realistic calculation were made taking advantage of all the heat-removal mechanisms available, the maximum temperature reached would be even less than the above value.

Insertion of excess reactivity

The Dow TRIGA research reactor is not licensed or configured for pulsing. However, it could be possible to induce a large power transient through failure of an experiment, such as the flooding of a void. The following analysis is intended to address that eventuality.

Calculations show that the rapid insertion of $2.00 reactivity over a critical condition produces a power burst with a peak power of approximately 250 megawatts and a reactor period of approximately 10 milliseconds. Experiments performed on the prototype TRIGA confirm this analysis. Upon rapid insertion of $2.00 reactivity the reactor power level increased on the predicted period and attained the predicted peak level. Within approximately 30 milliseconds after the initiation of the transient the reactor power level returned to an equilibrium level of about 200 kilowatts. The rapid reduction in reactor power level following peak power is brought about through the prompt negative temperature coefficient - a characteristic of the reactor fuel-moderator elements. This temperature coefficient has been measured to be an average of $0.017 reactivity loss per degree C rise in fuel temperature. No boiling was observed in the reactor tank during the $2.00 transient.

The loading of the Dow TRIGA research reactor for 300 kW operation would result in a maximum excess reactivity of $3.00 above a cold critical condition, with no Xenon. The maximum reactivity transient that can occur would be produced by the rapid insertion of the entire available amount of excess reactivity. The prototype TRIGA reactor at General Atomic has been pulsed safely thousands of times with $3.14 insertions. The resulting power excursions attained a peak power of 1500 megawatts with a reactor period of 4.0 milliseconds, with a total power release during the transient of about 20 megawatt-seconds. The maximum measured fuel temperature for these pulses was less than 500 degrees C.

Based on these and other operating experiences with similar TRIGA reactors the insertion of such a pulse of reactivity, while not within the license limits for the Dow TRIGA research reactor, would not result in the generation of a hazardous situation.

### M 1.3. Mishandling or Malfunction of Fuel

The rupture of a fuel element would result in the release of fission products. Fuel elements are rarely, if ever, removed from the pool water, so it is assumed that the damaged fuel element is submerged in the reactor pool at the time of the accidents, and only halogens and noble gases may be released. This type of event has been analysis by F. C. Foushee and R. H. Peters, "Summary of TRIGA Fuel Fission Product Release Experiments", Gulf Energy and Environmental Systems report A-10801, 1971. Similar conclusions are reported by S. C. Hawley and R. L. Kathren, "Credible Accident Analyses for TRIGA and TRIGA-fueled Reactors", NUREG/CR-2387, PNL-4028 (1982). Assuming that the reactor has been operated at 1 MW with zero decay time the fission product inventory predicted by RSAC for a single element is presented in Table 8. The use of the Dow TRIGA research reactor over the past 40 years indicates that the reactor has not been continuously operated for a sufficient period of time to achieve saturation of the fission product inventory and is not likely to be so operated, therefore the inventory is conservatively estimated and the doses estimated are for emergency planning only.

Table 8. Fission product inventory for a single element in Curies

| | |
|---|---|
| Halogens | [redacted] |
| Noble gases | [redacted] |

The volume of the reactor room is about $1.3 \times 10^8$ cubic centimeters, with a turnover rate of about $5 \times 10^7$ cubic centimeters per minute. The effective dose equivalent was calculated assuming perfect mixing the room and instantaneous release to the unrestricted area.

M.1.3.1. Restricted area

The effective dose equivalent to an individual in the restricted area in enveloped in the radioactive cloud of noble gases, using dose conversion factors from FGR No. 11 (Environmental Protection Agency, 1988) is 0.14 Sv/hour (14 rem /hour). If the halogens are able to be released from the water, the committed effective dose rate to whole body is 0.15 Sv/hr (15 rem/hr) and the committed dose equivalent to the thyroid is estimated as 4.68 Sv/hour (468 rem/hour).

M.1.3.2. Unrestricted area

Using the Pasquill categories' and a Gaussian approach to dispersion, the maximum concentration of fission products to a member of the public is at the fenceline, 23 m from the reactor building. The short range is due to the low height of the ventilation exit 2.73 meters (8 ft). The projected I-131 effective dose equivalent is 0.021 Sv/hour (2.1 rem/hour) if the fuel element is not submerged in water. The committed effective dose equivalent at 30 meters is 0.12 mSv/hour (120 mrem /hour).

### M.1.4. Experiment Malfunction

Experiment malfunction includes flooding of pneumatic transfer terminus or rotary specimen in the core. Since the rotary specimen rack is outside the core the effect on the excess reactivity, and rapid reactivity insertion is negligible. Flooding of the pneumatic transfer tube also results in a negligible impact on the core reactivity.

### M.1.5. Loss of Normal Electrical Power

The reactor control system is fail-safe in the event of power failure; that is, loss of power will de-energize the magnets and release the control rods. Loss of water supply or other utilities will have no effect, as the reactor

does not depend on them. There is no provision for emergency or back-up power. Radiological surveillance can be performed, in case of loss of power, using the portable battery operated instruments which are available.

### M.1.6. External Events

Likely external events such as flooding, high winds and earthquake may result in loss of shielding, cooling or fuel element cladding failure which has been described previously.

### M.1.7. Mishandling or Malfunction of Equipment

It is conceivable that a heavy weight, such as a lead transfer cask, could be dropped on the reactor core from above and could smash the core in such a way as to change the fuel-to-water ratio. The designed fuel-to-water ratio in the core was selected because this ratio was calculated to- give very nearly the minimum critical mass. Major physical damage to the core could result in damage to the control rods, possibly preventing the removal of these rods and also changing the geometry of the core lattice. This would not be expected to make significant increases in the reactivity of the system.

Such mechanical damage could result in breaches of the cladding of one or more fuel elements and the consequent release of radioactive materials. Such a release would have consequences similar to those of the maximum credible accident, discussed below, with the exceptions that the mechanical damage scenario would probably not involve the maximum inventory of radioactive fission products but could well involve more fuel elements.

## M.2. Summary and Conclusion

Based on the operating history of the TRIGA reactor and fuel design, in addition to numerous NRC and Federal reviews the consequences of an incident at a TRIGA reactor are minimal. The are no unreviewed safety issues resulting from the continued operation of the Dow TRIGA research reactor.

## M.3. Bibliography

Environmental Protection Agency. 1988. Limiting Values of Radionuclide Intake and Air Concentration and Dose Conversion Factors for Inhalation, Submersion, and Ingestion. Federal Guidance Report No. 11. Oak Ridge National Laboratories.

# N. TECHNICAL SPECIFICATIONS

TECHNICAL SPECIFICATIONS

FOR THE

DOW TRIGA RESEARCH REACTOR

FACILITY LICENSE R-108

AMENDMENT 9

Effective with License renewal

This document includes the Technical Specifications and the bases for the Technical Specifications. The bases provide the technical support for the individual Technical Specifications and are included for information purposes only. The bases are not part of the Technical Specifications and they do not constitute limitations or requirements to which the licensee shall adhere.

## 1. DEFINITIONS

1.1. ALARA - The ALARA (As Low As Reasonably Achievable) program is a set of procedures which is intended to minimize occupational exposures to ionizing radiation and releases of radioactive materials to the environment.

1.2. Channel - A channel is a combination of sensors, electronic circuits, and output devices connected by the appropriate communications network in order to measure and display the value of a parameter.

1.3. Channel Calibration - A channel calibration is an adjustment of a channel such that its output corresponds with acceptable accuracy to known values of the parameter which the channel measures. Calibration shall encompass the entire channel, including equipment, actuation, alarm, or trip and shall include a Channel Test.

1.4. Channel Check - A channel check is a qualitative verification of acceptable performance by observation of channel behavior. The verification shall include comparison of the channel with other independent channels or systems measuring the same variable, whenever possible.

1.5. Channel Test - A channel test is the introduction of a signal into a channel for verification of the operability of the channel.

1.6. Confinement - Confinement is an enclosure of the facility which controls the movement of air into and out of the facility through a controlled path.

1.7 Core Configuration – Core configuration shall be an assembly of standard NRC-approved low enriched stainless-steel-clad or aluminum-clad TRIGA fuel elements in light water. The fuel shall be arranged in a close-packed array for operation at full licensed power except for (1) replacement of single individual fuel elements with in-core irradiation facilities or control rod guide tubes and (2) the start-up neutron source. The aluminum-clad fuel element shall be placed in the E or F ring of the core.

1.8 Damaged Fuel- Damaged TRIGA fuel is defined for stainless steel-clad $UZrH_{1.65}$ as the sagitta exceeding 0.0625 in (0.159 cm) over the length of the cladding, elongation exceeding 0.125 in. (0.318). For aluminum clad fuel $UZrH_{1.0}$ sagitta exceeding 0.125 in. (0.318) and elongation exceeding 0.5 in (1.27 cm). Fuel is also defined as damaged when burn-up of U-235 exceeds 50% of the initial concentration

1.9. Excess reactivity - Excess reactivity is that amount of reactivity that would exist if all reactivity control devices were moved to the maximum reactive condition from the point where the reactor is exactly critical ($k_{eff}$=1) at reference core conditions

1.10. Experiment - An experiment is any device or material, not normally part of the reactor, which is introduced into the reactor for the purpose of exposure to radiation, or any operation which is designed to investigate non-routine reactor characteristics.

1.11. Experimental Facilities include the rotary specimen rack, sample containers replacing fuel elements or dummy fuel elements in the core, pneumatic transfer systems, the central thimble, and the area surrounding the core.

1.12. Facility Director - Person responsible for reactor facility operation.

1.13 Licensed area - Rooms 51 (51, 51A, 51AA 51B) and 52 of building 1602

1.14. Limiting Conditions for Operation - Limiting Conditions for Operation (LCO) are administratively established constraints on equipment and operational characteristics which shall be adhered to during operation of the reactor.

1.15. Limiting Safety System Setting (LSSS) - An LSSS is the actuating level for automatic protective devices related to those variables having significant safety functions.

1.16. Measured Value - A measured value is the value of a parameter as it appears on the output of a channel.

1.17. Modified Routine Experiments - Modified routine experiments are experiments which have not been designated as routine experiments or which have not been performed previously, but are similar to routine approved experiments in that the hazards are neither significantly different from nor greater than the hazards of the corresponding routine experiment.

1.18. Movable Experiment - A movable experiment is an experiment intended to be moved in or near the core or into and out of the reactor while the reactor is operating.

1.19. Operable - A component or system is operable if it is capable of performing its intended function.

1.20. Operating - A component or system is operating if it is performing its intended function.

1.21 Protective Action – protective action is the initiation of a signal or the operation of equipment with in the reactor safety system in response to a parameter or condition of the reactor facility having reached a specified limit.

1.22. Radiation Safety Committee (RSC) - The RSC is responsible for the administration of all Dow Midland location activities involving the use of radioactive materials and radiation sources including assuring compliance with US NRC regulations.

1.23. Reactivity Limits - The reactivity limits are those limits imposed on reactor core excess reactivity. Quantities are referenced to a Reference Core Condition.

1.24. Reactivity Worth of an Experiment - The reactivity worth of an experiment is the maximum absolute value of the reactivity change that would occur as a result of intended or anticipated changes or credible malfunctions that alter experiment position or configuration.

1.25. Reactor Operating - The reactor is operating whenever it is not secured or shutdown.

1.26. Reactor Safety Circuits - Reactor safety circuits are those circuits, including the associated input circuits, which are designed to initiate a reactor scram.

1.27. Reactor Secured - The reactor is secured whenever:

a) it contains insufficient fissile material present in the reactor, adjacent experiments or control rods, to attain criticality under optimum available conditions of moderation and reflection, or

b) the console switch is in the "off" position, the key is removed from the switch, and the key is in the control of a licensed reactor operator or stored in a locked storage area; and

sufficient control rods are inserted to assure that the reactor is subcritical by a margin greater than $1.00 at reference core conditions

no work is in progress involving core fuel, core structure, installed control rods or control rod drives unless those drives are physically disconnected from the control rods; and

no experiments in or near the core are being moved or serviced that have, on movement, a reactivity worth exceeding $0.75.

1.28. Reactor Shutdown - The reactor is shutdown if it is subcritical by at least one dollar in the reference core condition with the reactivity worth of all installed experiments included.

1.29. Reactor Operations Committee (ROC) - The ROC is charged with direct oversight of the reactor operations, including both review and audit functions.

1.30. Reactor Safety Systems - Reactor Safety Systems are those systems, including associated input channels, which are designed to initiate automatic reactor protection or to provide information for initiation of manual protective action.

1.31. Reference Core Condition - The Reference Core Condition is that condition when the core is at ambient temperature (cold) and the reactivity worth of xenon in the fuel is negligible (less than $.30).

1.32. Research Reactor- A Research Reactor is a device designed to support a self-sustaining nuclear chain reaction for research, development, education, training, or experimental purposes, and which may have provisions for the production of radioisotopes.

1.33. Reportable Occurrence - A Reportable Occurrence is any of the following

a) Operation with actual safety system settings for required systems less conservative than the limiting safety system settings specified in Technical Specification 2.2.

b) Operation in violation of limiting conditions for operation established in the Technical Specifications.

c) A reactor safety system component malfunction which renders or could render the reactor safety system incapable of performing its intended safety function unless the *malfunction or condition is caused by maintenance, then no report is required.*

d) Any unanticipated or uncontrolled change in reactivity greater than one dollar. Reactor trips resulting from a known cause are excluded.

e) Abnormal and significant degradation in reactor fuel, cladding, or coolant boundary.

f) An observed inadequacy in the implementation of either administrative or procedural controls such that the inadequacy causes or could have caused the existence or development of an unsafe condition with regard to reactor operations..

g) *Release of radioactivity from the site above limits specified in 10CFR20.*

1.34. Rod, Control - A control rod is a device containing neutron absorbing material which is used to control the nuclear fission chain reaction. The control rods are coupled to the control rod drive systems in a way that allows the control rods to perform a safety function.

1.35. Routine Experiment - A routine experiment is an approved experiment which involves operations under conditions which have been extensively examined in the course of the reactor test programs and which is not defined as any other kind of experiment. Experiments and classes of experiments which are to be considered as routine experiments shall be so defined by the Reactor Operations Committee.

1.36. Safety Limit - A Safety Limit is a limit on an important process variable which is found to be necessary to reasonably protect the integrity of certain of the physical barriers which guard against the uncontrolled release of radioactivity. The principal physical barrier is the fuel element cladding.

1.37. Scram time - Scram Time is the elapsed time required to fully insert the control rods following the actuation of a SCRAM signal.

1.38. Secured Experiment - A Secured Experiment is any experiment, experimental facility, or component of an experiment that is held in a stationary position relative to the reactor by mechanical means. The restraining forces shall be substantially greater than those to which the experiment might be subjected by hydraulic, pneumatic, buoyant, or other forces which are normal to the operating environment of the experiment, or by forces which can arise as the result of credible malfunctions.

1.39. Shall, Should, and May - The word "shall" is used to denote a requirement, the word "should" denotes a recommendation, and the word "may" denotes permission, neither a requirement nor a recommendation.

1.40. Shutdown Margin - Shutdown Margin is the minimum shutdown reactivity necessary to provide confidence that the reactor can be made subcritical by means of the control and safety systems starting from any permissible operating condition and with the most reactive rod in the most reactive position and that the reactor will remain subcritical without further operator action.

1.41. Special Experiments - Special experiments are experiments which are neither routine experiments nor modified routine experiments.

1.42. TRIGA fuel element- A TRIGA fuel element is a sealed unit containing $(U,Zr)H_x$ fuel for the reactor. The uranium is enriched to less than 20% in 235-U and the fraction of hydrogen is in the range of 1.0-1.1 for aluminum-clad TRIGA elements and in the range of 1.6-1.7 for stainless-steel-clad TRIGA elements.

1.43 Unscheduled shutdown – An unscheduled shutdown is any unplanned shutdown of the reactor caused by actuation of the reactor safety system, operator error, equipment malfunction, or manual shutdown in response to conditions that could adversely affect safe operation, not including shutdowns that occur during testing or checkout operations.

## 2. SAFETY LIMITS AND LIMITING SAFETY SYSTEM SETTINGS;

### 2.1. Safety Limit (SL)

Applicability

This specification applies to the temperature of the reactor fuel.

Objective

The objective of this specification is to define the maximum fuel temperature that can be permitted with confidence that no damage to the fuel element will result.

Specification

The temperature in any fuel element in the Dow TRIGA Research Reactor shall not exceed 500 C under any conditions of operation.

Basis

A loss in the integrity of the fuel element cladding could arise from a buildup of excessive pressure between the fuel and the cladding if the fuel temperature exceeds the safety limit. The pressure is caused by the heating of air, fission product gases, and hydrogen from the dissociation of the fuel-moderator. The magnitude of this pressure is determined by the temperature of the fuel element and by the hydrogen content. Data indicate that the stress in the cladding due to hydrogen pressure from the dissociation of $ZrH_{1.6}$ will remain below the ultimate stress provided that the fuel temperature does not exceed 1050 C and the fuel cladding temperature does not exceed 500 C. When the cladding temperature can equal the fuel temperature the fuel temperature design limit is 950 C (M. T. Simnad, G.A. Project No. 4314, Report e-117-833, 1980).

Experience with operation of TRIGA-fueled reactors at power levels up to 1500 kW shows no damage to the fuel due to thermally-induced pressures.

The thermal characteristics of aluminum-clad TRIGA fuel elements using $ZrH_{1.1}$ moderator have been analyzed (S. C. Hawley and R. L. Kathren, NUREG/CR-2387, PNL-4028, Credible Accident Analyses for TRIGA and TRIGA-fueled Reactors, 1982). A loss-of-coolant analysis showed that in a typical graphite-reflected Mark I TRIGA reactor fueled with 60 aluminum-clad fuel elements (Reed College) the maximum fuel temperature would be less than 150 C following infinite operation at 250 kilowatts terminated by the instantaneous loss of water. These temperatures are well below the region where the a+ d + g' to a + d phase change occurs in $ZrH_{1.1}$ (560 C).

## 2.2. Limiting Safety System Settings (LSSS)

### Applicability

This specification applies to the reactor scram setting which prevents the reactor fuel temperature from reaching the safety limit.

### Objective

The objective of this specification is to provide a reactor scram to prevent the safety limit from being reached.

### Specification

The LSSS shall not exceed 300 kW as measured by the calibrated power channels.

### Basis

The LSSS which does not exceed 300 kW provides a considerable safety margin. One TRIGA reactor (General Atomics, Torrey Pines) showed a maximum fuel temperature of 350 C during operation at 1500 kilowatts, while a 250-kilowatt TRIGA reactor (Reed College) showed a maximum fuel temperature of less than 150 C (reported by S. C. Hawley, R. L. Kathren, NUREG/CR-2387, PNL-4028 (1982), Credible Accident Analyses for TRIGA and TRIGA-Fueled Reactors). A portion of the safety margin could be used to account for variations of flux level (and thus the power density) at various parts of the core. The safety margin should be ample to compensate for other uncertainties, including power transients during otherwise steady-state operation, and should be adequate to protect aluminum-clad fuel elements from cladding failure due to temperature and pressure effects.

## 3. LIMITING CONDITIONS FOR OPERATION (LCO)

### 3.1. Reactivity Limits

Applicability

These specifications shall apply to the reactor at all times that it is in operation.

Objective

The purpose of the specification is to ensure that the reactor can be controlled and shut down at all times and that the safety limit will not be exceeded.

Specifications

The reactor shall be shutdown by more than $.50 with the most reactive control rod fully withdrawn, the other two control rods fully inserted at reference core conditions, including the reactivity worth of all experiments.

The excess reactivity measured at less than 10 watts in the reference core condition, with experiments in their most reactive state, shall not be greater than $3.00.

Bases

The value of the minimum shutdown margin assures that the reactor can be safely shut down using only the two least reactive control rods.

The assignment of a specification to the maximum excess reactivity serves as an additional restriction on the shutdown margin and limits the maximum power excursion that could take place in the event of failure of all of the power level safety circuits and administrative controls.

## 3.2. Core Configuration

### Applicability

This specification applies to the core configuration.

### Objective

The objective of this specification is to assure that the safety limit will not be exceeded due to power peaking effects.

### Specifications

The critical core shall be an assembly of standard NRC-approved stainless-steel-clad or aluminum-clad TRIGA fuel elements in light water.

The fuel shall be arranged in a close-packed array for operation at full licensed power except for (1) replacement of single individual fuel elements with in-core irradiation facilities or control rod guide tubes and (2) the start-up neutron source.

The aluminum-clad fuel element shall be placed in the E or F ring of the core.

### Bases

Operation with standard NRC-approved TRIGA fuel in the standard configuration ensures a conservative limitation with respect to the Safety Limit.

Placement of the aluminum-clad fuel element in the outer rings of the reactor core will help ensure that this element is not exposed to higher than average power levels, thus providing a greater degree of conservatism with respect to the Safety Limit for this one element.

## 3.3. Reactor Control and Safety Systems

### Applicability

These specifications apply to the reactor control and safety systems and safety-related instrumentation that shall be operating when the reactor is in operation.

### Objective

The objective of these specifications is to assure that all reactor control and safety systems and safety-related instrumentation are operable to minimum acceptable standards during operation of the reactor.

### Specifications

There shall be a minimum of one scram-capable analog safety channel.

There shall be a minimum of three operable control rods in the reactor core.

Each of the three control rods shall drop from the fully withdrawn position to the fully inserted position in a time not to exceed one second.

The reactor safety channels and the interlocks shall be operable in accordance with table 3.3A.

The reactor shall not be operated unless the measuring channels listed in Table 3.3B are operable.

Positive reactivity insertion rate by control rod motion shall not exceed $.20 per second.

Bypassing of the channels and interlocks in table 3.3 is permitted for checks, calibrations, maintenance or measurement with written approval from the Reactor Operations Committee.

Bases

Safety channels with scram capability utilizing analog circuitry have been proven acceptable by more than thirty years of experience.

The requirement for three operable control rods ensures that the reactor can meet the shutdown specifications.

The control rod drop time specification assures that the reactor can be shutdown promptly when a scram signal is initiated. The value of the control rod drop time is adequate to assure safety of the reactor.

Use of the specified reactor safety channels, set points, and interlocks given in table 3.3A assures protection against operation of the reactor outside the safety limits.

The requirement for the specified measurement circuits provides assurance that important reactor operation parameters can be monitored during operation.

The specification of maximum positive reactivity insertion rate helps assure that the Safety Limit is not exceeded.

TABLE 3.3A.

MINIMUM REACTOR SAFETY CIRCUITS,
INTERLOCKS, AND SET POINTS

Scram Channels

| Scram Channel | Minimum Operable | Scram Setpoint |
|---|---|---|
| Reactor Power Level NM1000 & NPP1000 | 2 | Not to exceed maximum licensed power |
| NPP1000 Detector High-Voltage Power Supply | 1 | Failure of the detector high-voltage power supply |
| NM1000 Detector High-Voltage Power Supply | 1 | Failure of the detector high-voltage power supply |
| Manual Scram | 1 | Not applicable |
| Watchdog (DAC to CSC) | 1 | Not applicable |

Interlocks

| Interlock/Channel | Function |
|---|---|
| Startup Countrate | Prevent control rod withdrawal when the neutron count rate is less than 2 cps |
| Rod Drive Control | Prevent simultaneous manual withdrawal of two control elements by the control rod drive motors |
| Reactor Period | Prevent control rod withdrawal when the period is less than 3 seconds |

TABLE 3.3A

BASES FOR REACTOR SAFETY CHANNELS AND INTERLOCKS

Scram Channels

| Scram Channel | Bases |
|---|---|
| Reactor Power Level | Provides assurance that the reactor shall be shut down automatically before the safety limit can be exceeded |
| Reactor Power Channel Detector Power Supplies | Provides assurance that the reactor cannot be operated without power to the neutron detectors which provide input to the NM1000 and NPP1000 power channels |
| Manual Scram | Allows the operator to shut the reactor down at any indication of unsafe or abnormal conditions |
| Watchdog | Ensures adequate communications between the Data Acquisition Computer (DAC) and the Control System Computer (CSC) units. |

Interlocks

| Interlock/Channel | Bases |
|---|---|
| Startup Countrate | Provides assurance that the signal in the NM1000 channel is adequate to allow reliable indication of the state of the neutron chain reaction. |
| Rod Drive Control | Limits the maximum positive reactivity insertion rate |
| Reactor Period | Prevents operation in a regime in which transients could cause the limiting safety system setting to be exceeded |

TABLE 3.3B

MEASURING CHANNELS

| Measuring channel | Minimum Number Operable |
|---|---|
| NM1000 | 1 |
| NPP1000 | 1 |
| Water Radioactivity Monitor | 1 |
| Water Temperature Monitor | 1 |

TABLE 3.3B

BASES FOR MEASURING CHANNELS

| Measuring Channel | Basis |
|---|---|
| NM1000 | Provides assurance that the reactor power level can be adequately monitored. |
| NPP1000 | Provides assurance that the reactor power level can be adequately monitored. |
| Water Radioactivity Monitor | Provides assurance that the water radioactivity level can be adequately monitored. |
| Water Temperature Monitor | Provides assurance that the water temperature can be adequately monitored |

## 3.4. Coolant System

### Applicability

These specifications apply to the quality of the coolant in contact with the fuel cladding, to the level of the coolant in the pool, and to the bulk temperature of the coolant. The coolant is deionized water

### Objectives

The objectives of this specification are:

to minimize corrosion of the cladding of the fuel elements and minimize neutron activation of dissolved materials,

to detect releases of radioactive materials to the coolant before such releases become significant,

to ensure the presence of an adequate quantity of cooling and shielding water in the pool, and

to prevent thermal degradation of the ion exchange resin in the purification system.

### Specifications

The conductivity of the pool water shall not exceed 5 µmhos/cm averaged over one month.

The pool water pH shall be in the range of 4 to 7.5.

The amount of radioactivity in the pool water shall not exceed 0.1 µCi/mL.

The water shall cover the core of the reactor to a minimum depth of 15 feet during operation of the reactor.

The bulk temperature of the coolant shall not exceed 60 C during operation of the reactor.

There shall be an audible alarm on the coolant level.

Bases

Increased levels of conductivity in aqueous systems indicate the presence of corrosion products and promote more corrosion. Experience with water quality control at many reactor facilities, including operation of the Dow TRIGA Research Reactor since 1967, has shown that maintenance within the specified limit provides acceptable control. Maintaining low levels of dissolved electrolytes in the pool water also reduces the amount of induced radioactivity, in turn decreasing the exposure of personnel to ionizing radiation during operation and maintenance. Both of these results are in accordance with the ALARA program.

Monitoring the pH of the pool water provides early detection of extreme values of pH which could enhance corrosion.

Monitoring the radioactivity in the pool water serves to provide early detection of possible cladding failures. Limitation of the radioactivity according to this specification decreases the exposure of personnel to ionizing radiation during operation and maintenance in accordance with the ALARA program.

Maintaining the specified depth of water in the pool provides shielding of the radioactive core which reduces the exposure of personnel to ionizing radiation in accordance with the ALARA program.

Maintaining the bulk temperature of the coolant below the specified limit assures minimal thermal degradation of the ion exchange resin.

## 3.5. Confinement

### Applicability

This specification applies to the reactor room confinement.

### Objective

The objective of this specification is to mitigate the consequences of possible release of radioactive materials to unrestricted areas.

### Specification

The ventilation system shall be operable and the external door (Door 10) shall be closed whenever the reactor is operated, fuel is manipulated, or radioactive materials with the potential of airborne releases are handled in the reactor room. The ventilation system is operable when the fan is on.

### Basis

This specification ensures that the confinement is configured to control any releases of radioactive material during fuel handling, reactor operation, or the handling of possible airborne radioactive material in the reactor room.

## 3.6. Radiation Monitoring Systems

### Applicability

These specifications apply to the radiation monitoring information available to the reactor operator during operation of the reactor.

### Objective

The objective of these specifications is to ensure that the reactor operator has adequate information to assure safe operation of the reactor.

### Specifications

A Continuous Air Monitor (CAM) (with readout meter and audible alarm) to measure radioactive particulates in the reactor room shall be operating during operation of the reactor.

The Area Monitor (AM) (with readout meter and audible alarm) in the reactor room shall be operating during operation of the reactor or when work is being done on or around the reactor core or experimental facilities. During short periods of repair to this monitor, not to exceed sixty days, reactor operations or work on or around the core or experimental facilities may continue while a portable gamma-sensitive ion chamber is utilized as a temporary substitute, provided that the substitute can be monitored by the reactor operator.

An environmental monitor such as a film badge, thermoluminescent dosimeter or other device shall be placed in the reactor room.

### Bases

The radiation monitors provide information of existing levels of radiation and air-borne radioactive materials which could endanger operating personnel or which could warn of possible malfunctions of the reactor or the experiments in the reactor.

## 3.7. Experiments

### Applicability

These specifications apply to the surveillance requirements and experiments installed in the reactor and its experimental facilities.

### Objective

The objective of these specifications is to prevent damage to the reactor or excessive release of radioactive materials in case of failure of an experiment.

### Specifications

1. Operation of the reactor for any purpose shall require the review and approval of the appropriate persons or groups of persons, except that operation of the reactor for the purpose of performing routine checkouts, where written procedures exist for those operations, shall be authorized by the written procedures. An operation shall not be approved unless the evaluation allows the conclusion that the failure of an experiment will not lead to the direct failure of a fuel element or of any other experiment.

2. The sum of the total absolute value of reactivity worths of all experiments shall not exceed $1.00. This includes the potential reactivity which might result from experimental malfunction, experiment flooding or voiding, or the removal or insertion of experiments.

3. Experiments having reactivity worths of greater than $0.75 shall be securely located or fastened to prevent inadvertent movement during reactor operation.

4. Experiments containing materials corrosive to reactor components, compounds highly reactive with water, potentially explosive materials or liquid fissionable materials shall be doubly encapsulated.

5. Materials which could react in a way which could damage the components of the reactor (such as gunpowder, dynamite, TNT, nitroglycerin, or PETN) shall not be irradiated in quantities greater than 25 milligrams in the reactor or experimental facilities without out-of-core tests which shall indicate that, with the containment provided, no damage to the reactor or its components shall occur upon reaction. Such materials in quantities less than 25 milligrams may be irradiated provided that the pressure produced in the experiment container upon reaction shall be calculated and/or experimentally demonstrated to be less than half the design pressure of the container. Such materials shall be packaged in the appropriate containers before being brought into the reactor room or shall be in the custody of duly authorized local, state, or federal officers.

6. Experiment materials, except fuel materials, which could off-gas, sublime, volatilize or produce aerosols under (a) normal operating conditions of the experiment or the reactor, (b) credible accident conditions in the reactor or (c) possible accident conditions in the experiment shall be limited in activity such that if 100% of the gaseous activity or radioactive aerosols produced escaped to the reactor room or the atmosphere, the airborne concentration of radioactivity would not exceed the limits of Appendix B of 10 CFR Part 20.

   The following assumptions should be used in calculations regarding experiments:

   a. If the effluent from an experimental facility exhausts through a holdup tank which closes automatically on high radiation levels, the assumption shall be used that 10% of the gaseous activity or aerosols produced will escape.

   b. If the effluent from an experimental facility exhausts through a filter installation designed for greater than 99% efficiency for 0.3 micron particles, the assumption shall be used that 10% of the aerosols produced escape.

   c. For materials whose boiling point is above 55 C and where vapors formed by boiling this material could escape only through an undisturbed column of water above the core, the assumption shall be used that 10% of these vapors escape.

7. Each fueled experiment shall be controlled such that the total inventory of iodine isotopes 131 through 135 in the experiment is no greater than 10 micro curies and the maximum strontium-90 inventory is no greater than 35 nanocuries.

8. If an experiment container fails and releases material which could damage the reactor fuel or structure by corrosion or other means, physical inspection shall be performed to determine the consequences and the need for corrective action.

9. Experiments shall not occupy adjacent fuel-element positions in the B- and C-rings

Bases

1. This specification is intended to provide at least one level of review of any proposed operation of the reactor in order to minimize the possibility of operations of the reactor which could be dangerous or in violation of administrative procedures or the technical specifications. The exception is made in the case of those few very well characterized operations which are necessary for routine checkout of the reactor and its systems, provided that those operations have been defined by written procedures which have been reviewed and approved by the Reactor Supervisor and the Reactor Operations Committee.

2. This specification is intended to limit the reactivity of the system so that the Safety Limit would not be exceeded even if the contribution to the total reactivity by the experiment reactivity should be suddenly removed.

3. This specification is intended to limit the power excursions which might be induced by the changes in reactivity due to inadvertent motion of an unsecured experiment. Such excursions could lead to an inability to control the reactor within the limits imposed by the license.

4. This specification is intended to reduce the possibility of damage to the reactor or the experiments due to release of the listed materials.

5. This specification is intended to reduce the possibility of damage to the reactor in case of accidental detonation of the listed materials.

6. This specification is intended to reduce the severity of the results of accidental release of airborne radioactive materials to the reactor room or the atmosphere.

7. This specification is intended to reduce the severity of any possible release of these fission products which pose the greatest hazard to workers and the general public.

8. This specification requires specific actions to determine the extent of damage following releases of materials. No theoretical calculations or evaluations are allowed.

9. This specification prevents serious modification of the neutron distribution which could affect the ability of the control rods to perform their intended function of maintaining safe control of the reactor.

Experience has shown that experiments which are reviewed by the staff and reactor operations committee can be conducted without endangering the safety of the reactor or exceeding the limits in the technical specifications

4. SURVEILLANCE REQUIREMENTS

Allowable surveillance intervals shall not exceed the following:

biennially - not to exceed 30 months
annually - not to exceed 15 months
semi-annually - not to exceed seven and one-half months
quarterly - not to exceed four months
monthly - not to exceed six weeks
weekly - not to exceed 10 days
daily - shall be done before the commencement of operation each day of operation

Established frequencies shall be maintained over the long term, so, for example, any monthly surveillance shall be performed at least 12 times during a calendar year of normal operation. If the reactor is not operated for a period of time exceeding any required surveillance interval, that surveillance task shall be performed before the next operation of the reactor. Any surveillance tasks which are missed more than once during such a shut-down interval need be performed only once before operation of the reactor. Surveillance tasks scheduled daily or weekly which cannot be performed while the reactor is operating may be postponed during continuous operation of the reactor over extended times. Such postponed tasks shall be performed following shutdown after the extended period of continuous operation before any further operation, where each task shall be performed only once no matter how many times that task has been postponed.

Required surveillances of the CAM and ARM shall not be deferred for extended reactor shutdown.

## 4.1. Reactor Core Parameters

### Applicability

These specifications apply to surveillance requirements for reactor core parameters.

### Objective

The objective of these specifications is to ensure that the specifications of section 3.1 are satisfied.

### Specification

The reactivity worth of each control rod, the reactor core excess, and the reactor shutdown margin shall be measured at least annually and after each time the core fuel is moved.

### Basis

Movement of the core fuel could change the reactivity of the core and thus affect both the core excess reactivity and the shutdown margin, as well as affecting the worth of the individual control rods. Evaluation of these parameters is therefore required after any such movement. Without any such movement the changes of these parameters over an extended period of time and operation of the reactor have been shown to be very small so that an annual measurement is sufficient to ensure compliance with the specifications of section 3.1.

## 4.2. Reactor Control and Safety Systems

### Applicability

These specifications apply to the surveillance requirements of the reactor safety systems.

### Objective

The objective of these specifications is to ensure the operability of the reactor safety systems as described in section 3.3.

### Specifications

1. Control rod drive withdrawal speeds and control rod drop times shall be measured at least annually and whenever maintenance is performed or repairs are made that could affect the rods or control rod drives.

2. A channel calibration shall be performed for the NM1000 and NPP1000 power level channel by thermal power calibration at least annually.

3. A channel test shall be performed at least daily and after any maintenance or repair for each of the six scram channels and each of the three interlocks listed in table 3.3A.

4. The control rods shall be visually inspected at least biennially.

### Bases

1. Measurement of the control rod drop time and compliance with the specification indicates that the control rods can perform the safety function properly. Measurement of the control rod withdrawal speed ensures that the maximum reactivity addition rate specification will not be exceeded.

2. Variations of the indicated power level due to minor variations of either of the two neutron detectors would be readily evident during day-to-day operation. The specification for thermal calibration of the NM1000 channel provides assurance that long-term drift of both neutron detectors would be detected and that the reactor shall be operated within the authorized power range.

3. The channel tests performed daily before operation and after any repair or maintenance provide timely assurance that the systems will operate properly during operation of the reactor.

4. Visual inspection of the control rods provides opportunity to evaluate any corrosion, distortion, or damage that might occur in time to avoid malfunction of the control rods. Experience at the Dow TRIGA Reactor Facility since 1967 indicates that the surveillance specification is adequate to assure proper operation of the control rods. This surveillance complements the rod drop time measurements.

## 4.3. Coolant System

### Applicability

These specifications shall apply to the surveillance requirements for the reactor coolant system.

### Objective

The objective of these specifications is to ensure that the specifications of section 3.4 are satisfied.

### Specifications

1. The conductivity, pH, and the radioactivity of the pool water shall be measured at least monthly.

2. The level of the water in the pool shall be determined to be adequate on a weekly basis.

3. The temperature of the coolant shall be monitored during operation of the reactor.

### Bases

1. Experience at the Dow TRIGA Research Reactor shows that this specification is adequate to detect the onset of degradation of the quality of the pool water in a timely fashion. Evaluation of the radioactivity in the pool water allows the detection of fission product releases from damaged fuel elements or damaged experiments.

2. Experience indicates that this specification is adequate to detect losses of pool water by evaporation.

3. This specification will enable operators to take appropriate action when the coolant temperature approaches the specified limit.

## 4.4. Radiation Monitoring Systems

### Applicability

These specifications apply to the surveillance requirements for the Continuous Air Monitor (CAM) and the Area Monitor (AM), both located in the reactor room.

### Objective

The objective of these specifications is to ensure the quality of the data presented by these two instruments.

### Specifications

1. A channel calibration shall be made for the CAM and the AM at least annually.

2. A channel test shall be made for the CAM and the AM at least weekly.

3. The environmental monitors shall be changed at least semi-annually.

### Bases

These specifications ensure that the named equipment can perform the required functions when the reactor is operating and that deterioration of the instruments shall be detected in a timely manner. Experience with these instruments has shown that the surveillance intervals are adequate to provide the required assurance.

4.5. Facility Specific Surveillance

Applicability

This specification shall apply to the fuel elements of the Dow TRIGA Research Reactor.

Objective

The objective of this specification is to ensure that the reactor is not operated with damaged fuel elements.

Specification

Each fuel element shall be examined visually and for changes in transverse bend and length at least once each five years, with at least 20 percent of the fuel elements examined each year. If a damaged fuel element is identified, the entire inventory of fuel elements shall be inspected prior to subsequent operations.

The reactor shall not be operated with damaged fuel except to detect and identify damaged fuel for removal. A TRIGA fuel element shall be considered damaged and removed from the core if:

a) The transverse bend exceeds 0.125 inch over the length of the cladding.

b) The length exceeds the original length by 0.125 inch.

c) A clad defect exists as indicated by release of fission products.

d) U-235 Burn-up exceeds 50% initial concentration

Basis

Visual examination of the fuel elements allows early detection of signs of deterioration of the fuel elements, indicated by signs of changes of corrosion patterns or of swelling, bending, or elongation. Experience at the Dow TRIGA Research reactor and at other TRIGA reactors indicates that examination of a five-year cycle is adequate to detect problems, especially in TRIGA reactors that are not pulsed. A five-year cycle reduces the handling of the fuel elements and thus reduces the risk of accident or damage due to handling.

## 4.6. ALARA

### Applicability

This specification applies to the surveillance of all reactor operations that could result in occupational exposures to ionizing radiation or the release of radioactive materials to the environment.

### Objective

The objective of this specification is to provide surveillance of all operations that could lead to occupational exposures to ionizing radiation or the release of radioactive materials to the environs.

### Specification

The review of all operations shall include consideration of reasonable alternate operational modes which might reduce exposures to ionizing radiation or releases of radioactive materials.

### Basis

Experience has shown that experiments and operational requirements, in many cases, may be satisfied with a variety of combinations of facility options, power levels, time delays, and effluent or staff radiation exposures. The ALARA (As Low As Reasonably Achievable) principle shall be a part of overall reactor operation and detailed experiment planning.

## 5. DESIGN FEATURES

### 5.1. Reactor Site and Building

Applicability

These specifications shall apply to the Dow TRIGA Research Reactor licensed area. The licensed area includes labs 51 and 52 of building 1602.

Objectives

The objectives of these specifications are to define the exclusion area and characteristics of the confinement.

Specifications

The minimum distance from the center of the reactor pool to the boundary of the exclusion area shall be 75 feet.

The reactor shall be housed in a room of about 6000 cubic feet volume designed to restrict leakage.

All air or other gas exhausted from the reactor room and from associated experimental facilities during reactor operation shall be released to the environment at a minimum of 8 feet above ground level.

Bases

The minimum distance from the pool to the boundary provides for dilution of effluents and for control of access to the reactor area.

Restriction of leakage, in the event of a release of radioactive materials, can contain the materials and reduce exposure of the public.

Release of gases at a minimum height of 8 feet reduces the possibility of exposure of personnel to such gases.

## 5.2. Reactor Coolant System

### Applicability

This specification applies to the Dow TRIGA Research Reactor.

### Objective

The objective of this specification is to define the characteristics of the cooling system of this reactor.

### Specification

The reactor core shall be cooled by natural convective water flow.

### Basis

Experience has shown that TRIGA reactors operating at power levels up to 1000 kilowatts can be cooled by natural convective water flow without damage of the fuel elements.

## 5.3. Reactor Core and Fuel

### Applicability

These specifications shall be applicable to the Dow TRIGA Research Reactor.

### Objective

The objective of these specifications is to define certain characteristics of the reactor in order to assure that the design and accident analyses shall be correct.

### Specification

The fuel shall be standard NRC-approved TRIGA fuel.

The control elements shall have scram capability and shall contain borated graphite, boron carbide powder, or boron and its components in solid form as a poison in an aluminum or stainless steel cladding.

The reflector (excluding experiments and experimental facilities) shall be a combination of graphite and water.

The structural components of the core shall be limited to aluminum or stainless steel.

### Bases

The entire design and accident analysis is based upon the characteristics of TRIGA fuel. Any other material would invalidate the findings of these analyses.

The control elements perform their function through the absorption of neutrons, thus affecting the reactivity of the system. Boron has been found to be a stable and effective material for this control.

The reflector serves to conserve neutrons and to reduce the amount of fuel that shall be in the core to maintain the chain reaction.

5.4. Fuel Storage

Applicability

This specification applies to the Dow TRIGA Research Reactor fuel storage facilities.

Objective

The objective of this specification is the safe storage of fuel.

Specification

All fuel and fueled devices not in the core of the reactor shall be stored in such a way that $k_{eff}$ shall be less than 0.8 under all conditions of moderation, and that will permit sufficient cooling by natural convection of water or air that temperatures shall not exceed the Safety Limit.

Basis

A value of $k_{eff}$ of less than 0.8 precludes any possibility of inadvertent establishment of a self-sustaining nuclear chain reaction. Cooling which maintains temperatures lower than the Safety Limit prevents possible damage to the devices with subsequent release of radioactive materials.

# 6. ADMINISTRATIVE CONTROLS

## 6.1. Organization

The Dow TRIGA Research Reactor is owned and operated by The Dow Chemical Company. The reactor is administered and operated through the Analytical Sciences Laboratory of the Michigan Division of Dow Chemical USA and is located in 1602 Building of the Analytical Sciences Laboratory at the Midland, Michigan location of the Michigan Division.

### 6.1.1. Structure

The structure of the administration of the reactor is shown in figure 6.1. This structure cuts across the lines of management of The Dow Chemical Company. The individual responsible for radiation safety is the Radiation Safety Officer for the reactor, who reports on matters of radiation safety to the Radiation Safety Committee and to the Reactor Operations Committee. The Radiation Safety committee oversees the *radiation safety program and is responsible for its implementation. The review and* audit functions are performed by the Reactor Operations Committee which is composed of at least four persons including a manager within Analytical Sciences Laboratory, the Radiation Safety Officer, and the Reactor Supervisor.

### 6.1.2. Responsibility

The Facility Director is responsible for reactor facility operation. The day-to-day responsibility for the safe operation of the reactor shall rest with the Reactor Supervisor who is a licensed Senior Reactor Operator appointed by the Facility Director. The Reactor Supervisor may appoint equally-qualified individuals, upon notification of the Facility Director and the Reactor Operations Committee, to assume the responsibilities of the Reactor Supervisor. The Reactor Supervisor reports to the Facility Director regarding reactor operation and within the reactor organization to the Reactor Operations Committee.

Figure 6.1. Administration

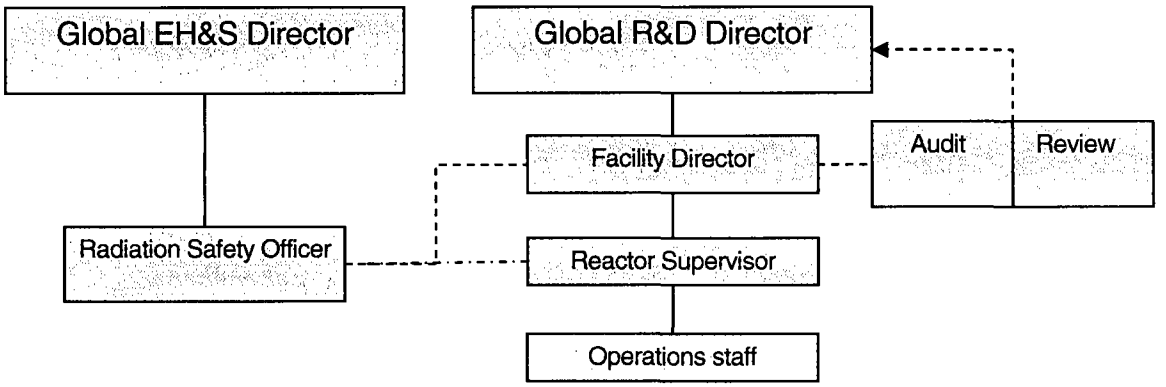

6.1.3. Staffing

The minimum staffing when the reactor is not secured shall be:

a. a licensed Reactor Operator or Senior Reactor Operator in the control room, and

b. a second person present at the facility able to carry out prescribed written instructions, and

c. a licensed Senior Reactor Operator in the facility or readily available on call and able to be at the facility within 30 minutes.

The following operations shall require the presence of the Senior Reactor Operator:

a. manipulations of fuel in the core;

b. manual removal of control rods;

c. maintenance performed on the core or the control rods;

d. recovery from unexplained scrams, and

e. movement of any in-core experiment having an estimated reactivity value greater than $0.75.

f. initial startup and approach to power.

A list of reactor facility personnel by name and telephone number shall be readily available in the control room for use by the operator, including management, radiation safety, and other operations personnel.

6.1.4. Selection and Training of Personnel

The Reactor Supervisor shall be responsible for the training and requalification of the facility Reactor Operators and Senior Reactor Operators.

The selection, training, and requalification of operations personnel shall be consistent with ANSI/ANS-15.4 sections 4 through 7..

Day-to-day changes in equipment, procedures, and specifications shall be communicated to the facility staff as the changes occur.

6.2. Review and Audit

The review and audit functions shall be the responsibility of the Reactor Operations Committee (ROC).

6.2.1. Charter and Rules

a. This Committee shall consist of the Global R&D Director, who shall be designated the chair of this committee; Facility Director, the Radiation Safety Officer; the Reactor Supervisor; and one or more persons who are competent in the field of reactor operations, radiation science, or reactor/radiation engineering. Members and alternates shall be appointed by and report to the Global R&D Director. Qualified and approved alternates may serve in the absence of regular members.

b. A quorum shall consist of a majority of the members of the ROC. No more than one-half of the voting members present shall be members of the day-to-day reactor operating staff.

c. The Committee shall meet quarterly and as often as required to transact business.

d. Minutes of the meetings shall be kept as records for the facility.

e. Members of the ROC may be polled by telephone or email for guidance and approvals.

f. The ROC shall report at least twice per year to the Radiation Safety Committee.

6.2.2. Review Functions

The ROC shall review and approve:

a. every experiment involving fissionable material;

b. experiments or operations which would require a change of core configuration, or a change in the equipment or apparatus associated with the reactor core or its irradiation facilities, or a new piece of apparatus being mounted in the reactor well; except that movement of the neutron source for the purpose of routinely checking the instrumentation, or the movement of the neutron detectors to establish the proper calibration of the associated channels shall not require review by the ROC;

c. any other experiment or operation which is of a type not previously approved by the Committee;

d. proposed changes in operating procedures, technical specifications, license, or charter;

e. violations of technical specifications, of the license, of internal procedures, and of instructions having safety significance;

f. operating abnormalities having safety significance;

g. reportable occurrences;

h. proposed changes in equipment, systems, tests, or experiments or procedures with respect to 10 CFR 50.59,

i. audit reports.

6.2.3. Audit Function

a. The ROC shall direct an annual audit of the facility operations for conformance to the technical specifications, license, and operating procedures, and for the results of actions taken to correct those deficiencies which may occur in the reactor facility equipment, systems, structures, or methods of operations that affect reactor safety.

This audit may consist of examinations of any facility records, review of procedures, and interviews of licensed Reactor Operators and Senior Reactor Operators.

The audit shall be performed by one or more persons appointed by the ROC. At least one of the auditors shall be familiar with reactor operations. No person directly responsible for any portion of the operation of the facility shall audit that operation.

A written report of the audit shall be submitted to the ROC within three months of the audit.

Deficiencies that affect reactor safety shall be reported to the Global R&D Director immediately.

b. The ROC shall direct a biennial audit of the facility emergency plan, and the reactor operator requalification program.

Deficiencies that affect reactor safety shall be reported to the Global R&D Director immediately.

A written report of the audit shall be submitted to the ROC within three months of the audit.

6.3. Procedures

Written procedures shall be reviewed and approved by the ROC for:

a. reactor startup, routine operation, and shutdown;

b. emergency and abnormal operating events, including shutdown;

c. fuel loading or unloading;

d. control rod removal or installation;

e. checkout, calibration and determination of operability of reactor operating instrumentation and controls, control rod drives and area radiation and air particulate monitors; and

f. preventive maintenance procedures.

g. operation of each experimental facility

Temporary deviations from the procedures may be made by the responsible Senior Reactor Operator or higher individual in order to deal with special or unusual circumstances. Such deviations shall be documented and reported immediately to the Reactor Operations Committee.

6.4. Experiment Review and Approval

Approved experiments shall be carried out in accordance with 10 CFR part 20, and TS 3.7.

All new experiments or class of experiments shall be reviewed by the Reactor Operations Committee and approved in writing by the Facility Director or designated alternates prior to initiation;

Substantive changes to previously approved experiments shall be made only after review by the Reactor Operations committee and approved in writing by the Facility Director or designated alternates prior to initiation; Minor changes that do not significantly alter the experiments may be approved by the Reactor Supervisor or higher.

Experiments shall be classified as Routine, Modified Routine or Special.

a. Routine Experiments (as reviewed and defined by the ROC) shall have the written approval of the Reactor Supervisor or a designated Assistant Reactor Supervisor or higher.

b. Modified Routine Experiments shall have the written approval of the Reactor Supervisor or a designated Assistant Reactor Supervisor or higher. The written approval shall include documentation that the hazards have been considered by the reviewer and been found appropriate for this form of experiment.

c. Special Experiments, those experiments that are neither Routine Experiments nor Modified Routine Experiments, shall have the approval of both the Facility Director (or designated alternate) and the ROC. Experiments which require the approval of the ROC through sections 6.2.2.a., 6.2.2.b., or 6.2.2.c. of the Technical Specifications are always Special Experiments.

6.5 Required Actions

6.5.1. In case of Safety Limit violation:

a. the reactor shall be shut down until resumed operations are authorized by the US NRC; and

b. the Safety Limit violation shall be immediately reported to the Facility Director or to a higher level; and

c. the Safety Limit violation shall be reported to the US NRC in accordance with section 6.6.2.; and

d. a report shall be prepared for the ROC describing the applicable circumstances leading to the violation including, when known, the cause and contributing factors, describing the effect of the violation upon reactor facility components, systems, or structures and on the health and safety of personnel and the public, and describing corrective action taken to prevent recurrence of the violation.

6.5.2. In case of a Reportable Occurrence of the type identified in section 1.31:

a. reactor conditions shall be returned to normal if the condition was caused by known event such as an electrical transient.

or the reactor shall be shut down; if the reactor is shut down operation shall not be resumed unless authorized by the Facility Director or designated alternate; and

b. the occurrence shall be reported to the Facility Director and to the US NRC as required per section 6.6.2.; and

c. the occurrence shall be reviewed by the ROC at the next scheduled meeting.

6.6. Reports

6.6.1. Operating Reports

A report shall be submitted annually, starting with the first quarter 1991 performance of annual tasks, to the Radiation Safety Committee and to The Document Control Desk US NRC, Washington, DC, ,which shall include the following:

a) status of the facility staff, licenses, and training;

b) a narrative summary of reactor operating experience, including the total megawatt-days of operation;

c) tabulation of major changes in the reactor facility and procedures, and tabulation of new tests and experiments that are significantly different from those performed previously and are not described in the Safety Analysis Report, including a summary of the analyses leading to the conclusions that they are allowed without prior authorization by the Nuclear Regulatory Commission and that 10 CFR 50.59 (a) was applicable;

d) the unscheduled shutdowns and reasons for them including, where applicable, corrective action taken to preclude recurrence;

e) tabulation of major preventive and corrective maintenance operations having safety significance;

f) a summary of the nature and amount of radioactive effluents released or discharged to environs beyond the effective control of the owner-operator as determined at or before the point of such release or discharge (the summary shall include to the extent practicable an estimate of individual radionuclides present in the effluent; if the estimated average release after dilution or diffusion is less than 25% of the concentration allowed or recommended, only a statement to this effect is needed); and

g) a summary of the radiation exposures received by facility personnel and visitors where such exposures are greater than 25 % of those allowed or recommended in 10 CFR 20.

6.6.2. Special Reports

a. There shall be a report to NRC Headquarters Operations Center, not later than the following working day by telephone and confirmed in writing by facsimile or similar conveyance to The Document Control Desk, US NRC, to be followed by a written report that describes the event within 14 days of:

a violation of the Safety Limit; or

a reportable occurrence (section 1.29).

b. There shall be a written report presented within 30 days to The Document Control Desk, US NRC, of: permanent changes in the facility staff involving the reactor supervisor or the facility director; or significant changes in the transient or accident analysis report as described in the Safety Analysis Report.

c. A written report shall be submitted to The Document Control Desk, US NRC,, within 60 days after criticality of the reactor under conditions of a new facility license authorizing an increase in reactor power level, describing the measured values of the operating conditions or characteristics of the reactor under the new conditions.

6.7 Records

6.7.1. The following records shall be kept for a minimum period of five years:

a. reactor operating logs;

b. irradiation request sheets;

c. checkout sheets;

d. maintenance records;

e. calibration records;

f. records of reportable occurrences;

g. fuel inventories, receipts, and shipments;

h. minutes of ROC meetings;

i. records of audits;

j. facility radiation and contamination surveys; and

k. surveillance activities as required by the Technical Specifications.

6.7.2 Records of the retraining and requalification of Reactor Operators and Senior Reactor Operators shall be retained for at least one complete requalification schedule and be maintained at all times the individual is employed or until the certification is renewed.

6.7.3. The following records shall be retained for the lifetime of the reactor:

a. records of gaseous and liquid radioactive effluents released to the environment;

b. records of the radiation exposure of all individuals monitored; and

c. records of environmental dosimetry

d. drawings of the reactor facility.

e. notice of violations, LSSS,LCOS

f. approved changes in the operating procedures

Technical Specification Index


ALARA 1
    surveillance 29
Audit function 38
Calibration
    channel 1
        thermal power 24
Channel 1
    calibration 1
        area monitor 27
        continuous air monitor 27
        thermal power 24
    check 1
    test 1
        area monitor 27
        continuous air monitor 27
        scrams and interlocks, surveillance 24
Check
    channel 1
Confinement 1
Control rod
    inspection 24
Control rods
    composition 32
Core Configuration 9
Excess Reactivity 1, 8
Experiment 1
    modified routine 2, 39
    movable 2
    routine 4, 39
    secured 4
    special 4, 39
    specifications 19
Experimental Facilities 1
Fuel element
    aluminum 9
    surveillance 28
    temperature design limit 6
    TRIGA 5, 9
Fuel storage 33
Irradiation facility
    incore 9
LCO 1
Limiting Conditions for Operation 1, 8
Limiting Safety System Setting 1, 3, 6, 7
LSSS 1
Measured Value 2
Minimum shutdown margin 8
Modified Routine Experiments 2, 39
Movable Experiment 2
Occurrence, reportable 3
Operable 2
Operating 2
Procedures 38
Radiation monitoring system

specifications 18
Radiation Safety Committee 2
Radiation Safety Officer 37
Reactivity
excess 1, 8
limits 2, 8
maximum positive insertion rate 10
worth of an experiment 2
Reactor
control and safety systems 10
operating 2
research 3
safety circuits 2
safety systems 3
secured 2
shutdown 3
Reactor Operations Committee 3, 37
audit function 38
charter and rules 37
Reactor Supervisor 37
Records 41
Reference Core Condition 3
Reflector 32
Report
operating 40
Reportable Occurrence 3
Reports
special 41
Research Reactor 3
Review and Audit 37
Review function 37
ROC 3
Rod, Control 4
Routine Experiment 4
Routine Experiments 39
RSC 2
Safety
related instrumentation 10
Safety Limit 4, 6
Scram
setting 7
time 4
Secured Experiment 4
Shutdown Margin 4
minimum 8
Special Experiment 4
Special Experiments 39

Specification 36
- administrative controls
  - audit function 38
  - experiment review and approval 39
  - operating report 40
  - organization 34
  - procedures 38
  - records 41
  - required actions 39
  - review and audit 37
  - review functions 37
  - special reports 41
  - staffing 36
  - structure 35
- airborne radioactivity from experiments 20
- aluminum-clad fuel element 9
- analog safety channel 10
- arrangement of fuel 9
- confinement
  - ventilation system 17
- corrosive, reactive, explosive, liquid fissionable materials 19
- design features
  - control element composition 32
  - core cooling 31
  - fuel storage 33
  - pool to boundary 30
  - reactor room 30
  - reflector 32
  - release of gases 30
  - TRIGA fuel 32
- experiment failure and inspection 20
- experiments in the B and C rings 20
- explosives, testing 19
- fuel 9
- fuel temperature (safety limit) 6
- fueled experiments and radioactive inventory 20
- limiting safety system setting 7
- manual scram 12
- maximum control rod drop time 10
- maximum core excess reactivity 8
- maximum positive reactivity for experiments 19
- maximum positive reactivity insertion rate 10
- measuring
  - water radioactivity 14
- measuring channel
  - linear power 14
  - percent power 14
  - water temperature 14
  - wide-range Log and period 14
- minimum shutdown margin 8
- number of control rods 10
- operability of measuring channels 10
- operability of safety channels and interlocks 10
- operation approval 19
- pool water
  - bulk temperature 15

conductivity 15
depth over the core 15
pH 15
radioactivity 15
radiation monitoring system
area monitor 18
continuous air monitor 18
Reactor Operations Committee 37
rod drive interlock 12
scram setpoint
power level 12
reactor period 12
securing experiments 19
startup countrate interlock 12
surveillance
ALARA 29
area monitor calibration 27
area monitor channel test 27
Continuous Air Monitor calibration 27
continuous air monitor channel test 27
control rod drive withdrawal speeds 24
control rod drop times 24
control rod inspection 24
control rod worth 23
fuel element examination 28
interlocks 24
log power channel 24
operation with damaged fuel 28
pool water conductivity 26
pool water level 26
pool water pH 26
pool water radioactivity 26
pool water temperature 26
reactor coolant system 26
reactor core excess 23
scram channels 24
shutdown margin 23
thermal power calibration 24
surveillance intervals 22
watchdog 12
water 9
wide-range linear channel high voltage 12
wide-range log channel high voltage 12
Staffing
minimum 36
Surveillance 22
Test
channel 1
TRIGA Fuel Element 5, 32
damage specifications 28
Ventilation system
specification 17

# O. FINANCIAL QUALIFICTIONS

## O.1. Financial Ability to Operate a Non-power reactor

This is section is addressed in a separate cover.

## O.2 Financial ability to Decommission the Facility

This is section is addressed in a separate cover.

# P. Other License Considerations

## P.1. Prior Use of Reactor Components

All components in use at the Dow TRIGA Research reactor will be utilized at the new power level. This section addresses safety considerations involving equipment currently in use. The components will be evaluated for corrosion, radiation damage, thermal cycling, high temperature, erosion and mechanical damage.

Reactor Tank

The aluminum reactor tank is located a sufficient distance from the core. The neutron fluence threshold for aluminum damage is much greater than the fluence generated over the lifetime of the reactor.. Typically water temperature ranges from 20-28 °C, the heat exchange system has a capacity of 1MW and thermally cycling would be slow. The effects from thermal cycling is negligible. The inside walls of the tank are visible, after several decades of operation the tank shows no mechanical damage, corrosion or erosion. The tank is accepted for continued use.

Core Assembly

The core supports, upper and lower grid plates will be used for the extended license period. These structures undergo a faster thermal cycle with an increased temperature range than the tank. The structures also experience a higher radiation field. However there are no signs of deformation or discoloration of the structures. Other TRIGA facilities use similar structures and operate at power levels higher than the proposed 300 kW.

Fuel

TRIGA fuel is designed to function at higher temperatures, higher power levels and to pulse. Design limits for the fuel are 530°C for aluminum clad fuel and 1150°C for stainless steel clad fuel. Cladding design temperature will not be approached. Fuel is inspected and monitored. The current fuel will be used in the new core configuration, with the possible exception of the single aluminum fuel element in inventory.

Neutron source for start-up channel.

The AmBe source used for the start up channel will be used in the new configuration.
Control Rods and Drives
The rods and drives are physically inspected annually for corrosion, erosion and mechanical damage. Reactivity worth is evaluated for each rod every six months. The inspection and procedures will continue to be employed. The control rods and drives will be used for the license extension.

Ion and Fission chamber

The existing chambers are used to measure power level. These chambers outputs are checked against the thermal output of the core during the thermal power calibration. If the chamber is not functioning, and cannot be calibrated, the chamber will be removed and replaced with a functional unit. The ion and fission chambers will remain in service until such time for replacement.

Reactor cooling system

The cooling system is rated at 1 MW. The cooling system is accepted for continued use.

CAM, ARM and Console functions do not change with requested continued used of the reactor. These systems will continue to be used.

### P.2. Medical Use of Non-power reactor

There are no plans to utilize the Dow TRIGA research reactor for medical purposes. If these plans change, the appropriate analysis will be conducted and an application for a facility license amendment will be submitted to the U.S. NRC.

## Q. Decommissioning and Possession only

### Q.1. Decommissioning

There are currently no plans to decommission the Dow TRIGA research reactor. As required, a decommissioning plan will be submitted for approval to the Nuclear Regulatory Commission prior to any decommissioning activities.

The Dow Chemical Company has entered into a contract with the U. S. Department of Energy (Contract #DE-CR01-83-NE44483) for the ultimate disposal of the fuel in the Dow TRIGA Research Reactor.

## R. Highly enriched to low enriched uranium conversions

Not applicable to the Dow TRIGA research reactor.