US-APWR DCD Revision 2
RAI Tracking Report

January 2011

Ⓒ2011 Mitsubishi Heavy Industries, Ltd.
All Rights Reserved

Revision History

Revision	Page	Description
0	All	Original issued Including RAI responses that were submitted through October 31, 2009
1	All	Including RAI responses that were submitted through December 31, 2009
2	All	Including RAI responses that were submitted through February 28, 2010 Including editorial changes to clarify the English language and to correct typographical errors
3	All	Including RAI responses that were submitted through April 30, 2010 Including editorial changes to clarify the English language and to correct typographical errors
4	All	Including RAI responses that were submitted through August 31, 2010 Including editorial changes to clarify the English language and to correct typographical errors
5	All	Including RAI responses that were submitted through October 30, 2010 Including editorial changes to clarify the English language and to correct typographical errors
6	All	Including RAI responses that were submitted through December 31, 2010 Including editorial changes to clarify the English language and to correct typographical errors Including Conceptual Design Information as appendix.

© 2011
MITSUBISHI HEAVY INDUSTRIES, LTD.
All Rights Reserved

This document has been prepared by Mitsubishi Heavy Industries, Ltd. ("MHI") in connection with the U.S. Nuclear Regulatory Commission's ("NRC") licensing review of MHI's US-APWR nuclear power plant design. No right to disclose, use or copy any of the information in this document, other than by the NRC and its contractors in support of the licensing review of the US-APWR, is authorized without the express written permission of MHI.

This document contains technology information and intellectual property relating to the US-APWR and it is delivered to the NRC on the express condition that it not be disclosed, copied or reproduced in whole or in part, or used for the benefit of anyone other than MHI without the express written permission of MHI, except as set forth in the previous paragraph.
This document is protected by the laws of Japan, U.S. copyright law, international treaties and conventions, and the applicable laws of any country where it is being used.

Mitsubishi Heavy Industries, Ltd.
16-5, Konan 2-chome, Minato-ku
Tokyo 108-8215 Japan

General Description

This report includes a table that identifies the impact of each response to the Request for Additional Information ("RAI") relative to the Design Control Document ("DCD") Revision 2 of US-APWR. This table shows the RAI responses which have been submitted since October 2009 and also should be incorporated into Tracking Report and DCD in future revision.

The report also includes the DCD Markups and Revision List for the RAI responses that impacted the DCD. Furthermore, the editorial changes to clarify the English language and to correct typographical errors are shown in the DCD Markups and Revision List.

Contents

For ease of using this Tracking Report, each chapter is organized in a stand alone fashion that includes a cover sheet and the following relevant information:

- DCD Revision List – a list of the revision resulting from RAI responses and others changes
- DCD Markups – a copy of the DCD pages that have changes resulting from RAI responses or others change.

Appendix-1

At the Design Centered Working Group ("DCWG") Meeting on Nov.3rd.,2010, the COL applicants suggested to incorporate the Conceptual Design Information ("CDI") into the US-APWR DCD. Furthermore, the NRC issued the RAI No. 585 which requested DCD Section 9.2.1 to identify the CDI. Attachment of this Tracking Report shows the changes on DCD to identify the CDI. Those changes will be incorporated into the next revision of DCD.

Chapter:3

SRP Section		DCD RAI Response							Other Drivers	Change ID Number for DCD forthcoming Revision	DCD Tracking Report Revision	DCD Revision
No.	Title	RAI No.	Question No.	Response Date	Impact on DCD	Impact on COLA	Impact on PRA	Response Status				
3.2.1	Seismic Classification	581	03.02.01-15	2010/7/21	Y	N	N		-	DCD_03.02.01-15	4	3
		581	03.02.01-16	2010/7/21	Y	N	N		-	DCD_03.02.01-16	4	3
		581	03.02.01-17	2010/7/21	N	N	N		-	-	N/A	N/A
		581	03.02.01-18	2010/7/21	N	N	N		-	-	N/A	N/A
3.2.2	System Quality Group								CP RAI 67	CP_03.02.02-3	0	3
	Classification	580	03.02.02-10	2010/7/21	Y	Y	N		-	DCD_03.02.02-10	4	3
		580	03.02.02-11	2010/7/21	N	N	N		-	-	N/A	N/A
		580	03.02.02-12	2010/7/21	Y	N	N		-	DCD_03.02.02-12	4	3
		580	03.02.02-13	2010/7/21	N	N	N		-	-	N/A	N/A
		580	03.02.02-14	2010/7/21	N	N	N		-	-	N/A	N/A
		580	03.02.02-15	2010/7/21	N	N	N		-	-	N/A	N/A
		580	03.02.02-16	2010/7/21	N	N	N		-	-	N/A	N/A
		667	03.02.02-17	XX/YY/2010								
		667	03.02.02-18	XX/YY/2010								
		667	03.02.02-19	XX/YY/2010								
3.3.1	Wind Loadings											
3.3.2	Tornado Loadings											
3.4.1	Internal Flood Protection for	579	03.04.01-21	2010/5/27	Y	Y	N		-	DCD_03.04.01-21	4	3
	Onsite Equipment Failures	579	03.04.01-22	2010/5/27	Y	N	N		-	DCD_03.04.01-22	4	3
				2010/12/9	Y	N	N		-		6	3
		579	03.04.01-23	2010/5/27	Y	N	N		-	DCD_03.04.01-23	4	3
		579	03.04.01-24	2010/6/21	Y	N	N		-	DCD_03.04.01-24	4	3
		579	03.04.01-25	2010/5/27	Y	N	N		-	DCD_03.04.01-25	4	3
		579	03.04.01-26	2010/6/21	Y	N	N		-	DCD_03.04.01-26	4	3
		579	03.04.01-27	2010/6/21	Y	N	N		-	DCD_03.04.01-27	4	3
		579	03.04.01-28	2010/6/21	Y	N	N		-	DCD_03.04.01-28	4	3
3.4.2	Analysis Procedures		03.04.02-1									
			03.04.02-2									
			03.04.02-3									
			03.04.02-4									
		489	03.04.02-5	12/26/2009	N	N	N		-	-	N/A	N/A
		546	03.04.02-6	2010/4/16	N	N	N		-	-	N/A	N/A
3.5.1.1	Internally Generated Missiles											
	(Outside Containment)											
3.5.1.2	Internally-Generated Missiles											
	(Inside Containment)											
3.5.1.3	Turbine Missiles	323	03.05.01.03-3	2010/5/24	Y	N	N		-	DCD_03.05.01.03-3	4	3
3.5.1.4	Missiles Generated by											
	Tornadoes and Extreme Winds											
3.5.1.5	Site Proximity Missiles											
	(Except Aircraft)											
3.5.1.6	Aircraft Hazards											

Chapter:3

SRP Section		DCD RAI Response							Other Drivers	Change ID Number for DCD forthcoming Revision	DCD Tracking Report Revision	DCD Revision
No.	Title	RAI No.	Question No.	Response Date	Impact on DCD	Impact on COLA	Impact on PRA	Response Status				
3.5.2	Components to be Protected from Externally-Generated Missiles											
3.5.3	Barrier Design Procedures	482	03.05.03-7	2009/12/9	N	N	N		-	-	N/A	N/A
		482	03.05.03-8	2009/12/9	Y	N	N		-	DCD_03.05.03-8	1	3
3.6.1	Plant Design for Protection Against Postulated Piping Failures in Fluid Systems Outside Containment											
3.6.2	Determination of Rupture Locations and Dynamic Effects Associated with the Postulated Rupture of Piping	459	03.06.02-20	2009/10/16	Y	N	N		-	DCD_03.06.02-20	-	2
		459	03.06.02-21	2009/10/16	N	N	N		-	-	N\A	N\A
		459	03.06.02-22	2009/10/16	Y	N	N		-	DCD_03.06.02-22	-	2
		459	03.06.02-23	2009/10/16	Y	N	N		-	DCD_03.06.02-23	-	2
		459	03.06.02-24	2009/10/16	Y	N	N		-	DCD_03.06.02-24	-	2
		459	03.06.02-25	2009/10/16	Y	N	N		-	DCD_03.06.02-25	0	3
		459	03.06.02-26	2009/10/16	N	N	N		-	-	N\A	N\A
		459	03.06.02-27	2009/10/16	Y	N	N		-	DCD_03.06.02-27	-	2
		459	03.06.02-28	2009/12/1	N	N	N		-	-	N\A	N\A
		459	03.06.02-29	2009/12/1	N	N	N		-	-	N\A	N\A
		459	03.06.02-30	2009/12/1	N	N	N		-	-	N\A	N\A
		459	03.06.02-31	2009/12/1	N	N	N		-	-	N\A	N\A
		459	03.06.02-32	2009/12/1	N	N	N		-	-	N\A	N\A
		459	03.06.02-33	2009/12/1	N	N	N		-	-	N\A	N\A
		459	03.06.02-34	2009/12/1	N	N	N		-	-	N\A	N\A
		459	03.06.02-35	2009/12/1	N	N	N		-	-	N\A	N\A
		459	03.06.02-36	2009/10/16	N	N	N		-	-	N\A	N\A
		459	03.06.02-37	10/16/2009	Y	N	N		-	DCD_03.06.02-37	-	2
		459	03.06.02-38	10/16/2009	Y	N	N		-	DCD_03.06.02-38	-	2
		459	03.06.02-39	2009/12/1	Y	N	N		-	DCD_03.06.02-39	1	3
		636	03.06.02-40	11/24/2010	N	N	N		-	-	N\A	N\A
				12/15/2010	Y	N	N		-	DCD_03.06.02-40	TBD	
		636	03.06.02-41	11/24/2010	Y	N	N		-	DCD_03.06.02-41	TBD	
				12/15/2010	Y	N	N		-		TBD	
		636	03.06.02-42	11/24/2010	Y	N	N		-	DCD_03.06.02-42	TBD	
				12/15/2010	Y	N	N		-		TBD	
		636	03.06.02-43	11/24/2010	Y	N	N		-	DCD_03.06.02-43	TBD	
				12/15/2010	Y	N	N		-		TBD	
		636	03.06.02-44	11/24/2010	N	N	N		-	-	N\A	N\A
				12/15/2010	Y	N	N		-	DCD_03.06.02-44	TBD	
		636	03.06.02-45	11/24/2010	N	N	N		-	-	N\A	N\A
				12/15/2010	Y	N	N		-	DCD_03.06.02-44	TBD	
		636	03.06.02-46	11/24/2010	N	N	N		-	-	N\A	N\A
				12/15/2010	N	N	N		-	-	N\A	N\A
		636	03.06.02-47	11/24/2010	Y	N	N		-	DCD_03.06.02-47	TBD	
				12/15/2010	Y	N	N		-		TBD	
		636	03.06.02-48	11/24/2010	Y	N	N		-	DCD_03.06.02-48	TBD	
				12/15/2010	Y	N	N		-		TBD	
3.6.3	Leak-Before-Break Evaluation Procedures	485	3.6.3-18	2010/1/18	N	N	N		-	-	N/A	N/A
		485	3.6.3-19	2010/1/18	Y	Y	N		-	DCD_3.6.3-19	2	3
		485	3.6.3-20	2010/1/18	N	N	N		-	-	N/A	N/A
		485	3.6.3-21	2010/1/18	Y	N	N		-	DCD_3.6.3-21	2	3
		485	3.6.3-22	2010/1/18	N	N	N		-	-	N/A	N/A
		485	3.6.3-23	2010/1/18	N	N	N		-	-	N/A	N/A
		485	3.6.3-24	2010/1/18	Y	N	N		-	DCD_3.6.3-24	2	3
		485	3.6.3-25	2010/1/18	N	N	N		-	-	N/A	N/A
3.7.1	Seismic Design Parameters	494	03.07.01-2	2010/1/29	N	N	N		-	-	N/A	N/A

Chapter:3

SRP Section		DCD RAI Response							Other Drivers	Change ID Number for DCD forthcoming Revision	DCD Tracking Report Revision	DCD Revision
No.	Title	RAI No.	Question No.	Response Date	Impact on DCD	Impact on COLA	Impact on PRA	Response Status				
		494	03.07.01-3	2010/1/29	N	N	N		-	-	N/A	N/A
		494	03.07.01-4	2010/1/29	Y	Y	N		-	DCD_03.07.01-4	2	3
		602	03.07.01-5	2010/7/27	N	N	N		-	-	N/A	N/A
		643	03.07.01-6	XX/YY/2010								
		643	03.07.01-7	XX/YY/2010								
		643	03.07.01-8	XX/YY/2010								
		643	03.07.01-9	XX/YY/2010								
		643	03.07.01-10	XX/YY/2010								
		643	03.07.01-12	2010/11/11	Y	Y	N		-	DCD_03.07.01-12	6	3
		643	03.07.01-13	2010/11/11	N	N	N		-	-	N/A	N/A
		643	03.07.01-14	2010/11/11	N	N	N		-	-	N/A	N/A
		643	03.07.01-15	2010/11/11	N	N	N		-	-	N/A	N/A
		643	03.07.01-16	2010/11/11	N	N	N		-	-	N/A	N/A
3.7.2	Seismic System Analysis	495	03.07.02-2	2010/2/2	N	N	N		-	-	N/A	N/A
		212	3.7.2-3	2009/5/7	Y	N	N		-	DCD_3.7.2-3	6	3
		495	03.07.02-3A	2010/2/2	N	N	N		-	-	N/A	N/A
		495	03.07.02-4	2010/2/2	Y	N	N		-	DCD_03.07.02-4	TBD	
		495	03.07.02-5	2010/2/2	Y	N	N		-	DCD_03.07.02-5	2	3
		603	03.07.02-9	2010/7/27	N	N	N		-	-	N/A	N/A
		603	03.07.02-10	2010/8/30	N	N	N		-	-	N/A	N/A
		625	03.07.02-11/RAI 3.7.2-38	2010/11/4	N	N	N		-	-	N/A	N/A
		625	03.07.02-12/RAI 3.7.2-39	2010/11/4	N	N	N		-	-	N/A	N/A
		625	03.07.02-13/RAI 3.7.2-40	2010/11/4	N	N	N		-	-	N/A	N/A
		625	03.07.02-14/RAI 3.7.2-41	2010/11/4	N	N	N		-	-	N/A	N/A
		625	03.07.02-15/RAI 3.7.2-42	2010/11/4	N	N	N		-	-	N/A	N/A
		625	03.07.02-16/RAI 3.7.2-43	2010/11/4	N	N	N		-	-	N/A	N/A
		625	03.07.02-17/RAI 3.7.2-44	2010/11/4	N	N	N		-	-	N/A	N/A
		625	03.07.02-18/RAI 3.7.2-45	2010/11/4	N	N	N		-	-	N/A	N/A
		625	03.07.02-19/RAI 3.7.2-46	2010/11/4	N	N	N		-	-	N/A	N/A
		625	03.07.02-20/RAI 3.7.2-47	2010/11/4	N	N	N		-	-	N/A	N/A
		625	03.07.02-21/RAI 3.7.2-48	2010/11/4	N	N	N		-	-	N/A	N/A
		625	03.07.02-22/RAI 3.7.2-49	2010/11/4	N	N	N		-	-	N/A	N/A
		625	03.07.02-23/RAI 3.7.2-50	2010/11/4	N	N	N		-	-	N/A	N/A
		625	03.07.02-24/RAI 3.7.2-51	2010/11/4	N	N	N		-	-	N/A	N/A
		212	3.7.2-17	2009/5/7	N	N	N		-	-	N/A	N/A
		212	3.7.2-18	2009/5/7	N	N	N		-	-	N/A	N/A
		212	3.7.2-19	2009/5/7	N	N	N		-	-	N/A	N/A
			3.7.2-29									
			3.7.2-30									
			3.7.2-31									
			3.7.2-32									
		542	3.7.2-33	2010/3/30	N	N	N		-	-	N/A	N/A
		542	3.7.2-34	2010/3/30	N	N	N		-	-	N/A	N/A
		542	3.7.2-35	2010/3/30	N	N	N		-	-	N/A	N/A
3.7.3	Seismic Subsystem Analysis	493	03.07.03-2	2010/1/28	Y	N	N		-	DCD_03.07.03-2	2	3
		493	03.07.03-3	2010/1/28	N	N	N		-	-	N/A	N/A
		493	03.07.03-4	2010/1/28	N	N	N		-	-	N/A	N/A
		493	03.07.03-5	2010/1/28	Y	N	N		-	DCD_03.07.03-5	2	3
		213	3.7.3-09 SUPP	2010/6/30	Y	N	N		-	DCD_3.7.3-09	4	3
3.7.4	Seismic Instrumentation											
		538	03.07.04-03	2010/3/30	Y	N	N		-	DCD_03.07.04-03	6	3
		632	03.07.04-04	2010/10/19	Y	Y	N		-	DCD_03.07.04-04	6	3
3.8.1	Concrete Containment											
		-	-	-	-	-	-	-	COL3.8(2) deleted	MAP-03-004	0	2, 3
		490	03.08.01-2	2010/2/4	N	N	N		-	-	N/A	N/A
		490	03.08.01-3	2010/2/4	N	N	N		-	-	N/A	N/A
		490	03.08.01-4	2010/2/4	N	N	N		-	-	N/A	N/A
		490	03.08.01-5	2010/2/4	N	N	N		-	-	N/A	N/A
		490	03.08.01-6	2010/2/4	N	N	N		-	-	N/A	N/A
		490	03.08.01-7	2010/2/4	N	N	N		-	-	N/A	N/A
		490	03.08.01-8	2010/2/4	N	N	N		-	-	N/A	N/A

Chapter:3

SRP Section		DCD RAI Response							Other Drivers	Change ID Number for DCD forthcoming Revision	DCD Tracking Report Revision	DCD Revision
No.	Title	RAI No.	Question No.	Response Date	Impact on DCD	Impact on COLA	Impact on PRA	Response Status				
		490	03.08.01-9	2010/2/4	N	N	N		-	-	N/A	N/A
		490	03.08.01-10	2010/2/4	N	N	N		-	-	N/A	N/A
3.8.3	Concrete and Steel	491	03.08.03-16	2010/3/3	N	N	N		-	-	N/A	N/A
	Internal Structures	491	03.08.03-17	2010/3/3	N	N	N		-	-	N/A	N/A
	of Steel or Concrete Containments	491	03.08.03-18	2010/3/3	N	N	N		-	-	N/A	N/A
		491	03.08.03-19	2010/3/3	N	N	N		-	-	N/A	N/A
		491	03.08.03-20	2010/3/3	N	N	N		-	-	N/A	N/A
		491	03.08.03-21	2010/3/3	N	N	N		-	-	N/A	N/A
		491	03.08.03-22	2010/3/3	N	N	N		-	-	N/A	N/A
		491	03.08.03-23	2010/3/3	N	N	N		-	-	N/A	N/A
		491	03.08.03-24	2010/3/3	N	N	N		-	-	N/A	N/A
		491	03.08.03-25	2010/3/3	N	N	N		-	-	N/A	N/A
		662	03.08.03-26	XX/YY/2010								
		662	03.08.03-27	XX/YY/2010								
		662	03.08.03-28	XX/YY/2010								
		662	03.08.03-29	XX/YY/2010								
		662	03.08.03-30	XX/YY/2010								
		662	03.08.03-31	XX/YY/2010								
		662	03.08.03-32	XX/YY/2010								
		676	03.08.03-33	XX/YY/2010								
		676	03.08.03-34	XX/YY/2010								
		676	03.08.03-35	XX/YY/2010								
3.8.4	Other Seismic Category I Structures	497	03.08.04-32	2010/2/19	N	N	N		-	-	N/A	N/A
		497	03.08.04-33	2010/2/19	Y	N	N		-	DCD_03.08.04-33	TBD	
		497	03.08.04-34	2010/2/19	Y	N	N		-	DCD_03.08.04-34	2	3
		497	03.08.04-35	2010/2/19	N	N	N		-	-	N/A	N/A
		497	03.08.04-36	2010/2/19	Y	N	N		-	DCD_03.08.04-36	2	3
		497	03.08.04-37	2010/2/19	N	N	N		-	-	N/A	N/A
		497	03.08.04-38	2010/2/19	N	N	N		-	-	N/A	N/A
		497	03.08.04-39	2010/2/19	N	N	N		-	-	N/A	N/A
		497	03.08.04-40	2010/2/19	N	N	N		-	-	N/A	N/A
		497	03.08.04-41	2010/2/19	Y	N	N		-	DCD_03.08.04-41	2	3
		497	03.08.04-42	2010/2/19	N	N	N		-	-	N/A	N/A
		497	03.08.04-43	2010/2/19	N	N	N		-	-	N/A	N/A
		497	03.08.04-44	2010/2/19	N	N	N		-	-	N/A	N/A
		497	03.08.04-45	2010/2/19	N	N	N		-	-	N/A	N/A
		497	03.08.04-46	2010/2/19	Y	N	N		-	DCD_03.08.04-46	2	3
		497	03.08.04-47	2010/2/19	N	N	N		-	-	N/A	N/A
3.8.5	Foundations	496	03.08.05-23	2010/2/4	N	N	N		-	-	N/A	N/A
		496	03.08.05-24	2010/2/4	N	N	N		-	-	N/A	N/A
		496	03.08.05-25	2010/2/4	Y	N	N		-	DCD_03.08.05-25	6	3
		496	03.08.05-26	2010/2/4	N	N	N		-	-	N/A	N/A
		496	03.08.05-27	2010/2/4	N	N	N		-	-	N/A	N/A
		496	03.08.05-28	2010/2/4	N	N	N		-	-	N/A	N/A
		496	03.08.05-29	2010/2/4	N	N	N		-	-	N/A	N/A
		496	03.08.05-30	2010/2/4	N	N	N		-	-	N/A	N/A
		496	03.08.05-31	2010/2/4	N	N	N		-	-	N/A	N/A
		496	03.08.05-32	2010/2/4	Y	N	N		-	DCD_03.08.05-32	2	3
		496	03.08.05-33	2010/2/4	N	N	N		-	-	N/A	N/A
		496	03.08.05-34	2010/2/4	N	N	N		-	-	N/A	N/A
		496	03.08.05-35	2010/2/4	Y	Y	N		-	DCD_03.08.05-35	6	3
3.9.1	Special Topics for											
	Mechanical Components											
3.9.2	Dynamic Testing and Analysis	498	03.09.02-59	2010/1/15	N	N	N		-	-	N/A	N/A
	of Systems, Structures,	498	03.09.02-60	2010/1/15	N	N	N		-	-	N/A	N/A
	and Components	498	03.09.02-61	2010/2/3	Y	N	N		-	DCD_03.09.02-61	TBD	
		498	03.09.02-62	2010/2/3	Y	N	N		-	DCD_03.09.02-62	TBD	
		498	03.09.02-63	2010/1/15	N	N	N		-	-	N/A	N/A

Chapter:3

SRP Section		DCD RAI Response							Other Drivers	Change ID Number for DCD forthcoming Revision	DCD Tracking Report Revision	DCD Revision
No.	Title	RAI No.	Question No.	Response Date	Impact on DCD	Impact on COLA	Impact on PRA	Response Status				
		498	03.09.02-64	2010/2/3	Y	N	N		-	DCD_03.09.02-64	2	3
		498	03.09.02-65	2010/2/3	N	N	N		-	-	N/A	N/A
		498	03.09.02-66	2010/2/3	N	N	N		-	-	N/A	N/A
		498	03.09.02-67	2010/1/15	N	N	N		-	-	N/A	N/A
		498	03.09.02-68	2010/2/3	N	N	N		-	-	N/A	N/A
		498	03.09.02-69	2010/2/3	N	N	N		-	-	N/A	N/A
		498	03.09.02-70	2010/2/3	N	N	N		-	-	N/A	N/A
		498	03.09.02-71	2010/2/3	N	N	N		-	-	N/A	N/A
		498	03.09.02-72	2010/1/15	N	N	N		-	-	N/A	N/A
		498	03.09.02-73	2010/1/15	N	N	N		-	-	N/A	N/A
		498	03.09.02-74	2010/1/15	N	N	N		-	-	N/A	N/A
		498	03.09.02-75	2010/2/3	N	N	N		-	-	N/A	N/A
		498	03.09.02-76	2010/1/15	N	N	N		-	-	N/A	N/A
		498	03.09.02-77	2010/1/15	N	N	N		-	-	N/A	N/A
		498	03.09.02-78	2010/1/15	N	N	N		-	-	N/A	N/A
		498	03.09.02-79	2010/1/15	N	N	N		-	-	N/A	N/A
		498	03.09.02-80	2010/2/3	N	N	N		-	-	N/A	N/A
		498	03.09.02-81	2010/1/15	N	N	N		-	-	N/A	N/A
		498	03.09.02-82	2010/2/3	N	N	N		-	-	N/A	N/A
		498	03.09.02-83	2010/1/15	N	N	N		-	-	N/A	N/A
		498	03.09.02-84	2010/2/3	N	N	N		-	-	N/A	N/A
		614	03.09.02-85	2010/9/16	N	N	N		-	-	N/A	N/A
		614	03.09.02-86	2010/9/16	N	N	N		-	-	N/A	N/A
		614	03.09.02-87	2010/9/16	N	N	N		-	-	N/A	N/A
		614	03.09.02-88	2010/9/29	N	N	N		-	-	N/A	N/A
		614	03.09.02-89	2010/9/29	Y	N	N		-	DCD_03.09.02-89	6	3
		614	03.09.02-90	2010/9/29	Y	N	N		-	DCD_03.09.02-90	6	3
		614	03.09.02-91	2010/10/28	N	N	N		-	-	N/A	N/A
		646	03.09.02-92	2010/11/11	N	N	N		-	-	N/A	N/A
				2010/12/14	N	N	N		-	-	N/A	N/A
3.9.3	ASME Code Class 1, 2, and 3 Components, and Component Supports, and Core Support Structures											
3.9.4	Control Rod Drive Systems	569	03.09.04-2	2010/5/13	Y	N	N		-	DCD_03.09.04-2	3	3
		570	03.09.04-3	2010/5/19	Y	N	N		-	DCD_03.09.04-3	4	3
		570	03.09.04-4	2010/5/19	Y	N	N		-	DCD_03.09.04-4	4	3
		570	03.09.04-5	2010/5/19	Y	N	N		-	DCD_03.09.04-5	4	3
		570	03.09.04-6	2010/5/19	N	N	N		-	-	N/A	N/A
		604	03.09.04-7	2010/7/28	Y	N	N		-	DCD_03.09.04-7	4	3
		604	03.09.04-8	2010/7/28	Y	N	N		-	DCD_03.09.04-8	4	3
		604	03.09.04-9	2010/7/28	Y	N	N		-	DCD_03.09.04-9	4	3
3.9.5	Reactor Pressure Vessel Internals											
3.9.6	Functional Design, Qualification, and Inservice Testing Programs for Pumps, Valves, and Dynamic Restraints											
3.10	Seismic/Dynamic Qual of Mech/Elec Eqmt	486	03.10-10	2009/12/9	N	N	N		-	-	N/A	N/A
		486	03.10-11	2009/12/9	Y	N	N		-	DCD_03.10-11	1	3
		486	03.10-12	2009/12/9	Y	N	N		-	DCD_03.10-12	1	3
		486	03.10-13	2009/12/25	Y	N	N		-	DCD_03.10-13	1	3
		486	03.10-14	2009/12/25	N	N	N		-	-	N/A	N/A
		486	03.10-15	2009/12/25	N	N	N		-	-	N/A	N/A
		486	03.10-16	2009/12/25	N	N	N		-	-	N/A	N/A
		486	03.10-17	2009/12/25	N	N	N		-	-	N/A	N/A
3.11	Environmental Qual of Mech/Elec Eqmt	445	03.11-16	2009/9/29	Y	N	N		-	DCD_03.11-16	0	3
		511	03.11-17	2010/2/2	N	N	N		-	-	N/A	N/A
		511	03.11-17 Supp	2010/6/28	N	N	N		-	-	N/A	N/A
		511	03.11-18	2010/2/2	N	N	N		-	-	N/A	N/A

Chapter:3

SRP Section		DCD RAI Response							Other Drivers	Change ID Number for DCD forthcoming Revision	DCD Tracking Report Revision	DCD Revision
No.	Title	RAI No.	Question No.	Response Date	Impact on DCD	Impact on COLA	Impact on PRA	Response Status				
		511	03.11-18 Supp	2010/6/28	N	N	N		-	-	N/A	N/A
		511	03.11-19	2010/2/2	N	N	N		-	-	N/A	N/A
		511	03.11-19 Supp	2010/6/28	N	N	N		-	-	N/A	N/A
		511	03.11-20	2010/2/2	N	N	N		-	-	N/A	N/A
		511	03.11-20 Supp	2010/6/28	N	N	N		-	-	N/A	N/A
		511	03.11-21	2010/2/2	Y	N	N		-	DCD_03.11-21	2	3
		511	03.11-21 Supp	2010/6/28	N	N	N		-	-	N/A	N/A
		511	03.11-22	2010/2/2	N	N	N		-	-	N/A	N/A
		511	03.11-22 Supp	2010/6/28	N	N	N		-	-	N/A	N/A
		511	03.11-23	2010/2/2	N	N	N		-	-	N/A	N/A
		511	03.11-23 Supp	2010/6/28	N	N	N		-	-	N/A	N/A
		511	03.11-24	2010/2/2	Y	N	N		-	DCD_03.11-24	2	3
		511	03.11-25	2010/2/2	N	N	N		-	-	N/A	N/A
		511	03.11-25 Supp	2010/6/28	N	N	N		-	-	N/A	N/A
		511	03.11-26	2010/2/2	N	N	N		-	-	N/A	N/A
		511	03.11-26 Supp	2010/6/28	N	N	N		-	-	N/A	N/A
		511	03.11-27	2010/2/2	N	N	N		-	-	N/A	N/A
		511	03.11-28	2010/2/2	N	N	N		-	-	N/A	N/A
		511	03.11-28 Supp	2010/6/28	N	N	N		-	-	N/A	N/A
		512	03.11-29	2010/1/28	N	N	N		-	-	N/A	N/A
		512	03.11-30	2010/1/28	N	N	N		-	-	N/A	N/A
		512	03.11-31	2010/1/28	N	N	N		-	-	N/A	N/A
		512	03.11-32	2010/1/28	N	N	N		-	-	N/A	N/A
		512	03.11-33	2010/1/28	N	N	N		-	-	N/A	N/A
		512	03.11-34	2010/1/28	Y	N	N		-	DCD_03.11-34	4	3
		512	03.11-35	2010/1/28	N	N	N		-	-	N/A	N/A
		589	03.11-36	2010/7/8	N	N	N		-	-	N/A	N/A
		589	03.11-37	2010/7/8	N	N	N		-	-	N/A	N/A
		589	03.11-38	2010/7/8	Y	N	N		-	DCD_03.11-38	4	3
		650	03.11-39	XX/YY/2010								
		650	03.11-40	XX/YY/2010								
3.12	ASME Code Class 1, 2, and 3	465	03.12-17	2009/12/2	Y	N	N		-	DCD_O3.12-17	1	3
	Piping Systems,	465	03.12-18	2009/11/18	N	N	N		-	-	N/A	N/A
	Piping Components	465	03.12-19	2009/11/18	Y	N	N		-	DCD_03.12-19	0	3
	and their Associated Supports	465	03.12-20	2009/11/18	Y	N	N		-	DCD_03.12-20	0	3
		465	03.12-21	2009/11/18	N	N	N		-	-	N/A	N/A
		465	03.12-22	2009/11/18	N	N	N		-	-	N/A	N/A
		465	03.12-23	2009/12/2	Y	N	N		-	DCD_03.12-23	1	3
		465	03.12-24	2009/11/18	Y	N	N		-	DCD_03.12-24	0	3
3.13	Threaded Fasteners -	273	3.13-1	2009/4/9	Y	N	N		-	DCD_3.13-1	3	2
	ASME Code Class 1, 2, and 3	273	3.13-2	2009/4/9	Y	N	N		-	DCD_3.13-2	3	2
		273	3.13-3	2009/4/9	Y	N	N		-	DCD_3.13-3	3	2
		273	3.13-4	2009/4/9	Y	N	N		-	DCD_3.13-4	3	2
		273	3.13-5	2009/4/9	Y	N	N		-	DCD_3.13-5	3	2
		-	-	-	-	-	-	-	COL3.13(1) deleted	MAP-03-015	-	2
		-	-	-	-	-	-	-	COL3.13(2) deleted	MAP-03-016	-	2
3.13	Threaded Fasteners -											
	ASME Code Class 1, 2, and 3											

Chapter:4

SRP Section		DCD RAI Response							Other Drivers	Change ID Number for DCD forthcoming Revision	DCD Tracking Report Revision	DCD Revision
No.	Title	RAI No.	Question No.	Response Date	Impact on DCD	Impact on COLA	Impact on PRA	Response Status				
4.2	Fuel System Design	476	4.1-***1	2009/12/11	N	N	N		-	-	N/A	N/A
		476	4.1-***2	2009/12/11					-			
		476	4.1-***3	2009/12/11	N	N	N		-	-	N/A	N/A
		477	4.2-***1	2009/12/18	N	N	N		-	-	N/A	N/A
		477	4.2-***2	2009/12/18	N	N	N		-	-	N/A	N/A
		477	4.2-***3	2009/12/18	N	N	N		-	-	N/A	N/A
		477	4.2-***4	2009/12/18	N	N	N		-	-	N/A	N/A
		477	4.2-***5	2009/12/18	N	N	N		-	-	N/A	N/A
		477	4.2-***6	2009/12/18	N	N	N		-	-	N/A	N/A
		477	4.2-***7	2009/12/18	N	N	N		-	-	N/A	N/A
		477	4.2-***8	2009/12/18	N	N	N		-	-	N/A	N/A
		477	4.2-***9	2009/12/18	N	N	N		-	-	N/A	N/A
		477	4.2-***10	2009/12/18	N	N	N		-	-	N/A	N/A
		477	4.2-***11	2009/12/18	N	N	N		-	-	N/A	N/A
		477	4.2-***12	2009/12/18	N	N	N		-	-	N/A	N/A
		477	4.2-***13	2009/12/18	N	N	N		-	-	N/A	N/A
		519	04.02-37	2/25/2010	N	N	N		-	-	N/A	N/A
		519	04.02-38	2/25/2010	N	N	N		-	-	N/A	N/A
		519	04.02-39	2/25/2010	N	N	N		-	-	N/A	N/A
		519	04.02-40	2/25/2010	N	N	N		-	-	N/A	N/A
		519	04.02-41	2/25/2010	N	N	N		-	-	N/A	N/A
		519	04.02-42	2/25/2010	N	N	N		-	-	N/A	N/A
		572	04.02-43	2010/5/14	N	N	N		-	-	N/A	N/A
		572	04.02-44	2010/5/14	N	N	N		-	-	N/A	N/A
4.3	Nuclear Design	545	04.03-48	2010/4/28	N	N	N		-	-	N/A	N/A
		545	04.03-49	2010/4/28	N	N	N		-	-	N/A	N/A
		545	04.03-50	2010/4/2	N	N	N		-	-	N/A	N/A
		545	04.03-51	2010/4/28	N	N	N		-	-	N/A	N/A
		545	04.03-52	2010/4/28	N	N	N		-	-	N/A	N/A
		545	04.03-53	2010/4/28	N	N	N		-	-	N/A	N/A
		545	04.03-54	2010/4/2	N	N	N		-	-	N/A	N/A
		545	04.03-55	2010/4/2	N	N	N		-	-	N/A	N/A
		545	04.03-56	2010/4/2	N	N	N		-	-	N/A	N/A
		545	04.03-57	2010/4/28	N	N	N		-	-	N/A	N/A
		545	04.03-58	2010/4/2	N	N	N		-	-	N/A	N/A
		545	04.03-59	2010/4/2	N	N	N		-	-	N/A	N/A
		545	04.03-60	2010/4/2	N	N	N		-	-	N/A	N/A
		545	04.03-61	2010/4/2	N	N	N		-	-	N/A	N/A
		545	04.03-62	2010/4/28	N	N	N		-	-	N/A	N/A
		545	04.03-63	2010/4/2	N	N	N		-	-	N/A	N/A
		545	04.03-64	2010/4/2	N	N	N		-	-	N/A	N/A
		545	04.03-65	2010/4/28	N	N	N		-	-	N/A	N/A
		545	04.03-66	2010/4/28	N	N	N		-	-	N/A	N/A
4.4	Thermal and Hydraulic Design	377	04.04-4	2009/6/25	N	N	N		-	-	N/A	N/A
				2009/12/2	N	N	N		-	-	N/A	N/A
		377	04.04-5	2009/6/25	N	N	N		-	-	N/A	N/A
		377	04.04-6	2009/6/25	N	N	N		-	-	N/A	N/A
		378	04.04-7	2009/6/25	N	N	N		-	-	N/A	N/A
		530	04.04-8	2010/3/4	N	N	N		-	-	N/A	N/A
		530	04.04-9	2010/3/4	N	N	N		-	-	N/A	N/A
		530	04.04-10	2010/3/4	N	N	N		-	-	N/A	N/A
		530	04.04-11	2010/3/4	N	N	N		-	-	N/A	N/A
		530	04.04-12	2010/3/4	N	N	N		-	-	N/A	N/A
		530	04.04-13	2010/3/4	N	N	N		-	-	N/A	N/A
		530	04.04-14	2010/3/4	N	N	N		-	-	N/A	N/A
		530	04.04-15	2010/3/4	Y	N	N		-	DCD_04.04-15	3	3
		530	04.04-16	2010/3/4	N	N	N		-	-	N/A	N/A
		530	04.04-17	2010/3/4	N	N	N		-	-	N/A	N/A
		530	04.04-18	2010/3/4	N	N	N		-	-	N/A	N/A
		530	04.04-19	2010/3/4	N	N	N		-	-	N/A	N/A
		530	04.04-20	2010/3/4	N	N	N		-	-	N/A	N/A
		530	04.04-21	2010/3/4	N	N	N		-	-	N/A	N/A
		530	04.04-22	2010/3/4	N	N	N		-	-	N/A	N/A
		530	04.04-23	2010/3/4	N	N	N		-	-	N/A	N/A
		530	04.04-24	2010/3/4	N	N	N		-	-	N/A	N/A
		530	04.04-25	2010/3/4	N	N	N		-	-	N/A	N/A

Chapter:4

SRP Section		DCD RAI Response							Other Drivers	Change ID Number for DCD forthcoming Revision	DCD Tracking Report Revision	DCD Revision
No.	Title	RAI No.	Question No.	Response Date	Impact on DCD	Impact on COLA	Impact on PRA	Response Status				
		530	04.04-26	2010/3/4	N	N	N		-	-	N/A	N/A
		530	04.04-27	2010/3/4	N	N	N		-	-	N/A	N/A
		530	04.04-28	2010/3/4	N	N	N		-	-	N/A	N/A
		530	04.04-29	2010/3/4	N	N	N		-	-	N/A	N/A
		530	04.04-30	2010/3/4	N	N	N		-	-	N/A	N/A
		530	04.04-31	2010/3/4	N	N	N		-	-	N/A	N/A
		530	04.04-32	2010/3/4	N	N	N		-	-	N/A	N/A
		530	04.04-33	2010/3/4	N	N	N		-	-	N/A	N/A
		530	04.04-34	2010/3/4	N	N	N		-	-	N/A	N/A
		530	04.04-35	2010/3/4	N	N	N		-	-	N/A	N/A
		530	04.04-36	2010/3/4	N	N	N		-	-	N/A	N/A
		530	04.04-37	2010/3/4	N	N	N		-	-	N/A	N/A
		530	04.04-38	2010/3/4	N	N	N		-	-	N/A	N/A
		530	04.04-39	2010/3/4	N	N	N		-	-	N/A	N/A
		530	04.04-40	2010/3/4	N	N	N		-	-	N/A	N/A
4.5.1	Control Rod Drive	457	04.5.01-8	10/29/2009	Y	N	N		-	DCD_04.5.01-8	0	3
	Structural Materials	457	04.5.01-9	10/29/2009	Y	N	N		-	DCD_04.5.01-9	0	3
		457	04.5.01-10	10/29/2009	Y	N	N		-	DCD_04.5.01-10	0	3
				2010/3/29	Y	N	N		-	DCD_04.5.01-10	3	3
		654	04.05.01-11	12/03/2010	Y	N	N		-	DCD_04.5.01-11	6	3
		654	04.05.01-12	12/03/2010	Y	N	N		-	DCD_04.5.01-12	6	3
		654	04.05.01-13	12/03/2010	Y	N	N		-	DCD_04.5.01-13	6	3
		654	04.05.01-14	12/03/2010	Y	N	N		-	DCD_04.5.01-14	6	3
		654	04.05.01-15	12/03/2010	Y	N	N		-	DCD_04.5.01-15	6	3
4.5.2	Reactor Internal and Core	502	4.5.2-17	2010/1/18	N	N	N		-	-	N/A	N/A
	Support Structure Materials	502	4.5.2-18	2010/1/18	N	N	N		-	-	N/A	N/A
				2010/1/21	N	N	N		-	-	N/A	N/A
		502	4.5.2-19	2010/1/18	N	N	N		-	-	N/A	N/A
		502	4.5.2-20	2010/1/18	N	N	N		-	-	N/A	N/A
		527	4.5.2-21	2010/3/2	N	N	N		-	-	N/A	N/A
		573	4.5.2-22	2010/5/19	N	N	N		-	-	N/A	N/A
		620	4.5.2-23	2010/9/14	N	N	N		-	-	N/A	N/A
		653	4.5.2-24	2010/12/13	N	N	N		-	-	N/A	N/A
4.6	Functional Design											
	of Control Rod Drive System											

Chapter:6

SRP Section		DCD RAI Response							Other Drivers	Change ID Number for DCD forthcoming Revision	DCD Tracking Report Revision	DCD Revision
No.	Title	RAI No.	Question No.	Response Date	Impact on DCD	Impact on COLA	Impact on PRA	Response Status				
6.1.1	Engineered Safety Features	379	06.01.01-9	2009/7/10	Y	N	N		-	DCD_06.01.01-9	4	2
	Materials			2010/3/30	Y	N	N		-	DCD_06.01.01-9	3	3
		379	06.01.01-10	2009/7/10	Y	N	N		-	DCD_06.01.01-10	4	2
		487	06.01.01-11	2009/12/3	Y	N	N		-	DCD_06.01.01-11	1	3
		487	06.01.01-12	2009/12/3	N	N	N		-	-	N/A	N/A
		544	06.01.01-13	2010/4/21	Y	N	N		-	DCD_06.01.01-13	3	3
		544	06.01.01-14	2010/4/21	Y	N	N		-	DCD_06.01.01-14	3	3
		544	06.01.01-15	2010/4/21	N	N	N		-	-	N/A	N/A
		544	06.01.01-16	2010/4/21	N	N	N		-	-	N/A	N/A
		544	06.01.01-17	2010/4/21	Y	N	N		-	DCD_06.01.01-17	3	3
		544	06.01.01-18	2010/4/21	N	N	N		-	-	N/A	N/A
		544	06.01.01-19	2010/4/21	Y	N	N		-	DCD_06.01.01-19	3	3
		612	06.01.01-20	2010/8/25	Y	N	N		-	DCD_06.01.01-20	5	3
		612	06.01.01-21	2010/8/25	Y	N	N		-	DCD_06.01.01-21	TBD	
		612	06.01.01-22	2010/8/25	Y	N	N		-		5	3
				2010/10/7	Y	N	N		-	DCD_06.01.01-22	5	3
		612	06.01.01-23	2010/8/25	Y	N	N		-	DCD_06.01.01-23	5	3
6.1.2	Protective Coating Systems (Paints)											
	Organic Materials											
6.2.1	Containment Functional Design	587	06.02.01.01.A-1	2010/6/7	N	N	N		-	-	N/A	N/A
	Organic Materials	623	06.02.01-18	2010/9/29	N	N	N		-	-	N/A	N/A
		623	06.02.01-19	2010/9/29	Y	N	N		-	-	TBD	
		623	06.02.01-20	2010/9/29	N	N	N		-	-	N/A	N/A
6.2.1.2	Subcompartment Analysis											
6.2.1.3	Mass and Energy Release											
	Analysis for Postulated											
	Loss-of-Coolant Accidents											
6.2.1.4	Mass and Energy Release											
	Analysis for Postulated											
	Secondary System Pipe Ruptures											
	(LOCAs)											
6.2.1.5	Min. Containment Pressure											
	Analysis for											
	for Emergency Core Cooling Sys.											
	Performance Capability Studies											
6.2.2	Containment	85	06.02.02-10	2009/11/12	Y	N	N	fin.	-	DCD_06.02.02-10	1	2
	Heat Removal Systems	85	06.02.02-11	2009/11/12	N	N	N	fin.	-	-	N/A	N/A
		263	06.02.02-12	2009/3/31	Y	N	N		-	DCD_06.02.02-12	3	2
		263	06.02.02-13	2009/3/31	N	N	N		-	-	N/A	N/A
		263	06.02.02-14	2009/3/31	N	N	N		-	-	N/A	N/A
		263	06.02.02-15	2009/3/31	N	N	N		-	-	N/A	N/A
		278	06.02.02-16	2009/4/10	Y	N	N		-	DCD_06.02.02-16	3	2
		330	06.02.02-17	2009/5/18	N	N	N		-	-	N/A	N/A
		349	06.02.02-18	2009/5/12	N	N	N		-	-	N/A	N/A
		354	06.02.02-19	2009/7/7	N	N	N		-	-	N/A	N/A
		354	06.02.02-20	2009/7/7	N	N	N		-	-	N/A	N/A
		354	06.02.02-21	2009/7/7	N	N	N		-	-	N/A	N/A
		354	06.02.02-22	2009/7/7	N	N	N		-	-	N/A	N/A
		354	06.02.02-23	2009/7/7	N	N	N		-	-	N/A	N/A
		354	06.02.02-24	2009/7/7	N	N	N		-	-	N/A	N/A
				10/16/2009	Y	N	N		-	DCD_06.02.02-24	TBD	
		354	06.02.02-25	2009/7/7	Y	N	N		-	DCD_06.02.02-25	4	2
		354	06.02.02-26	2009/7/7	N	N	N		-	-	N/A	N/A
		354	06.02.02-27	2009/7/7	Y	N	N		-	DCD_06.02.02-27	4	2
		354	06.02.02-28	2009/7/7	N	N	N		-	-	N/A	N/A
		354	06.02.02-29	2009/7/7	N	N	N		-	-	N/A	N/A
		354	06.02.02-30	2009/7/7	N	N	N		-	-	N/A	N/A

Chapter:6

SRP Section		DCD RAI Response							Other Drivers	Change ID Number for DCD forthcoming Revision	DCD Tracking Report Revision	DCD Revision
No.	Title	RAI No.	Question No.	Response Date	Impact on DCD	Impact on COLA	Impact on PRA	Response Status				
		354	06.02.02-31	2009/7/7	Y	Y	N		-	DCD_06.02.02-31	4	2
				10/06/2009	Y	Y	N		-	DCD_06.02.02-31	-	2
		354	06.02.02-32	2009/7/7	Y	Y	N		-	DCD_06.02.02-32	-	2
				10/06/2009	Y	N	N		-	DCD_06.02.02-32	-	2
		354	06.02.02-33	2009/7/7	Y	Y	N		-	DCD_06.02.02-33	-	2
				10/06/2009	Y	N	N		-	DCD_06.02.02-33	-	2
		354	06.02.02-34	2009/7/7	Y	Y	N		-	DCD_06.02.02-34	-	2
				10/06/2009	Y	N	N		-	DCD_06.02.02-34	-	2
		354	06.02.02-35	2009/7/7	Y	Y	N		-	DCD_06.02.02-35	-	2
				10/06/2009	Y	N	N		-	DCD_06.02.02-35	-	2
		354	06.02.02-36	2009/7/7	Y	Y	N		-	DCD_06.02.02-36	-	2
				10/06/2009	Y	N	N		-	DCD_06.02.02-36	-	2
		354	06.02.02-37	2009/7/7	N	N	N		-	-	N/A	N/A
		354	06.02.02-38	2009/7/7	Y	N	N		-	DCD_06.02.02-38	-	2
		354	06.02.02-39	2009/7/7	N	N	N		-	-	N/A	N/A
		354	06.02.02-40	2009/7/7	Y	N	N		-	DCD_06.02.02-40	4	2
		354	06.02.02-41	2009/7/7	Y	N	N		-	DCD_06.02.02-41	-	2
		354	06.02.02-42	2009/7/7	Y	N	N		-	DCD_06.02.02-42	4	2
		354	06.02.02-43	2009/7/7	Y	N	N		-	DCD_06.02.02-43	4	2
		354	06.02.02-44	2009/7/17	Y	N	N		-	DCD_06.02.02-44	TBD	
		366	06.02.02-45	2009/6/11	N	N	N		-	-	N/A	N/A
		366	06.02.02-46	2009/6/11	Y	N	N		-	DCD_06.02.02-46	3	2
		366	06.02.02-47	2009/6/11	N	N	N		-	-	N/A	N/A
		366	06.02.02-48	2009/6/11	N	N	N		-	-	N/A	N/A
		366	06.02.02-49	2009/6/11	N	N	N		-	-	N/A	N/A
		366	06.02.02-50	2009/6/11	N	N	N		-	-	N/A	N/A
		366	06.02.02-51	2009/6/11	N	N	N		-	-	N/A	N/A
		422	06.02.02-52	2010/1/21	N	N	N		-	-	N/A	N/A
		466	06.02.02-53	2009/11/24	N	N	N		-	-	N/A	N/A
		466	06.02.02-54	2009/11/24	N	N	N		-	-	N/A	N/A
		466	06.02.02-55	2009/11/24	Y	N	N		-	DCD_06.02.02-55	TBD	
		631	06.02.02-56	2010/10/21	N	N	N			-	N/A	N/A
		631	06.02.02-57	2010/10/21	N	N	N			-	N/A	N/A
		637	06.02.02-58	2010/10/21	N	N	N		-	-	N/A	N/A
		637	06.02.02-59	2010/10/21	N	N	N		-	-	N/A	N/A
		637	06.02.02-60	2010/10/21	Y	N	N				TBD	
		645	06.02.02-61	2010/11/10	N	N	N		-	-	N/A	N/A
		652	06.02.02-62	2010/11/30	N	N	N		-	-	N/A	N/A
		-	-	-	-	-	-	-	COL 6.2(9) deleted	MAP-06-007	4	2
6.2.4	Containment Isolation System	553	06.02.04-53	2010/4/19	Y	N	N		-	DCD_06.02.04-53	3	3
		553	06.02.04-54	2010/4/19	Y	N	N		-	DCD_06.02.04-54	3	3
6.2.5	Combustible Gas Control in Containment	471	6.2.5-35	11/6/2009	Y	N	N		-	DCD_6.2.5-35	0	3
		471	6.2.5-36	2010/5/28	N	N	N		-	-	N/A	N/A
		551	6.2.5-37	2010/4/20	Y	N	N		-	DCD_6.2.5-37	3	3
		551	6.2.5-38	2010/4/20	N	N	N		-	-	N/A	N/A
		-	-	-	-	-	-	-	COL 6.2(7) deleted	MAP-06-009	1	2
		635	6.2.5-39	2010/10/20	Y	N	N		-	DCD_6.2.5-39	6	3
		635	6.2.5-40	2010/10/20	Y	N	N		-	DCD_6.2.5-40	6	3
6.2.6	Containment Leakage Testing	472	06.02.06-23	2009/11/13	Y	N	N		-	DCD_06.02.06-23	1	3
		472	06.02.06-24	2009/11/13	Y	N	N		-	DCD_06.02.06-24	1	3
		472	06.02.06-25	2009/11/13	N	N	N		-	-	N/A	N/A
		472	06.02.06-26	2009/11/27	Y	N	N		-	DCD_06.02.06-26	1	3
		472	06.02.06-27	2009/11/27	Y	N	N		-	DCD_06.02.06-27	1	3
		552	06.02.06-28	2010/4/16	N	N	N		-	-	N/A	N/A
		552	06.02.06-29	2010/4/16	N	N	N		-	-	N/A	N/A
		552	06.02.06-30	2010/4/16	Y	N	N		-	DCD_06.02.06-30	3	3
		-	-	-	-	-	-	-	COL 6.2(8) revised	MAP-06-010	-	2
		648	06.02.06-31	2010/11/11	Y	N	N		-	DCD_06.02.06-31	6	3
		648	06.02.06-32	2010/11/11	Y	N	N		-	DCD_06.02.06-32	6	3
		648	06.02.06-33	2010/11/11	Y	N	N		-	DCD_06.02.06-33	6	3
6.2.7	Fracture Prevention of											

Chapter:6

SRP Section		DCD RAI Response							Other Drivers	Change ID Number for DCD forthcoming Revision	DCD Tracking Report Revision	DCD Revision
No.	Title	RAI No.	Question No.	Response Date	Impact on DCD	Impact on COLA	Impact on PRA	Response Status				
	Containment Pressure Boundary											
6.3	Emergency Core Cooling System	597	06.03-84	2010/7/8	N	N	N		-	-	N/A	N/A
		597	06.03-85	2010/7/8	N	N	N		-	-	N/A	N/A
		597	06.03-86	2010/7/8	N	N	N		-	-	N/A	N/A
		626	06.03-87	2010/10/14	N	N	N		-	-	N/A	N/A
6.4	Control Room Habitability System	49	06.04-9	2008/9/16	Y	N	N	fin.	-	DCD_06.04-9	(1)	2
		473		11/13/2009	Y	N	N		-	DCD_06.04-9	0	3
		501	06.04-10	2010/1/21	N	N	N		-	-	N/A	N/A
		559	06.04-11	2010/5/20	Y	N	N		-	DCD_06.04-11	4	3
		559	06.04-12	2010/5/20	Y	N	N		-	DCD_06.04-12	4	3
		559	06.04-13	2010/5/20	Y	N	N		-	DCD_06.04-13	4	3
6.5.1	ESF Atmosphere Cleanup Systems	558	06.05.01-9	2010/5/27	Y	N	N		-	DCD_06.05.01-9	4	3
		558	06.05.01-10	2010/4/22	N	N	N		-	-	N/A	N/A
		558	06.05.01-11	2010/4/22	Y	N	N		-	DCD_06.05.01-11	3	3
		558	06.05.01-12	2010/4/22	Y	N	N		-	DCD_06.05.01-12	3	3
		558	06.05.01-13	2010/4/22	Y	N	N		-	DCD_06.05.01-13	3	3
		558	06.05.01-14	2010/4/22	Y	N	N		-	DCD_06.05.01-14	3	3
		558	06.05.01-15	2010/4/22	Y	N	N		-	DCD_06.05.01-15	3	3
		558	06.05.01-16	2010/5/27	Y	N	N		-	DCD_06.05.01-16	4	3
		558	06.05.01-17	2010/5/27	Y	N	N		-	DCD_06.05.01-17	4	3
		558	06.05.01-18	2010/4/22	Y	N	N		-	DCD_06.05.01-18	3	3
		615	06.05.01-19	2010/9/29	Y	N	N		-	DCD_06.05.01-19	5	3
		615	06.05.01-20	2010/9/29	Y	N	N		-	DCD_06.05.01-20	5	3
6.5.2	Containment Spray	460	06.05.02-7	11/13/2009	N	N	N		-	-	N/A	N/A
	as a Fission Product	517	06.05.02-8	2010/2/25	N	N	N		-	-	N/A	N/A
	Cleanup System											
6.5.3	Fission Product											
	Control Systems and Structures											
6.5.5	Pressure Suppression Pool											
	as a											
	Fission Product Cleanup System											
6.6	Inservice Inspection and Testing											
	of Class 2 and 3 Components											
6.6.2	Inservice Inspection and Testing											
	of Class 2 and 3 Components											
6.6.3	Inservice Inspection and Testing											
	of Class 2 and 3 Components											
6.6.4	Inservice Inspection and Testing											
	of Class 2 and 3 Components											

Chapter:6

SRP Section		DCD RAI Response							Other Drivers	Change ID Number for DCD forthcoming Revision	DCD Tracking Report Revision	DCD Revision
No.	Title	RAI No.	Question No.	Response Date	Impact on DCD	Impact on COLA	Impact on PRA	Response Status				

Chapter:7

SRP Section		DCD RAI Response							Other Drivers	Change ID Number for DCD forthcoming Revision	DCD Tracking Report Revision	DCD Revision
No.	Title	RAI No.	Question No.	Response Date	Impact on DCD	Impact on COLA	Impact on PRA	Response Status				
7.1	Instrumentation and Controls -- Introduction	516	07.01-C Appendix-1	2010/2/15	N	N	N		-	-	N/A	N/A
7.2	Reactor Trip System											
		672	07.02-3	XX/YY/2010								
		672	07.02-4	XX/YY/2010								
7.3	Engineered Safety Features Systems											
7.4	Safe Shutdown Systems											
		671	07.04-20	XX/YY/2010								
		671	07.04-21	XX/YY/2010								
		671	07.04-22	XX/YY/2010								
7.5	Information Systems Important to Safety	568	07.05-18	2010/4/28	Y	N	N		-	DCD_07.05-18	3	3
		656	07.05-19	12/16/2010	N	N	N		-	-	N/A	N/A
		656	07.05-20	12/16/2010	N	N	N		-	-	N/A	N/A
7.6	Interlock Systems Important to Safety	638	07.06-17	10/26/2010	Y	N	N		-	DCD_07.06-17	6	3
		638	07.06-18	10/26/2010	Y	N	N		-	DCD_07.06-18	6	3
		638	07.06-19	10/26/2010	Y	N	N		-	DCD_07.06-19	6	3
		638	07.06-20	10/26/2010	N	N	N		-	-	N/A	N/A
		638	07.06-21	10/26/2010	N	N	N		-	-	N/A	N/A
		638	07.06-22	10/26/2010	Y	N	N		-	DCD_07.06-22	6	3
		638	07.06-23	10/26/2010	Y	N	N		-	DCD_07.06-23	6	3
		638	07.06-24	10/26/2010	Y	N	N		-	DCD_07.06-24	6	3
7.7	Control Systems	655	07.07-28	11/30/2010	N	N	N		-	-	N/A	N/A
		655	07.07-29	11/30/2010	N	N	N		-	DCD_07.07-29	N/A	N/A
7.8	Diverse I&C Systems											
7.9	Data Communication Systems											
7-14	Branch Technical Position - Guidance on Software Reviews for Digital Computer Based Instrument and Control Systems											
		525	07-14BTP-30	2010/3/3	N	N	N		-	-	N/A	N/A
		525	07-14BTP-31	2010/3/3	N	N	N		-	-	N/A	N/A
		525	07-14BTP-32	2010/3/3	N	N	N		-	-	N/A	N/A
		525	07-14BTP-33	2010/3/3	N	N	N		-	-	N/A	N/A
		525	07-14BTP-34	2010/3/3	N	N	N		-	-	N/A	N/A
		525	07-14BTP-35	2010/3/3	N	N	N		-	-	N/A	N/A
		525	07-14BTP-36	2010/3/3	N	N	N		-	-	N/A	N/A
		525	07-14BTP-37	2010/3/3	N	N	N		-	-	N/A	N/A
		525	07-14BTP-38	2010/3/3	N	N	N		-	-	N/A	N/A
		525	07-14BTP-39	2010/3/3	N	N	N		-	-	N/A	N/A
		525	07-14BTP-40	2010/3/3	N	N	N		-	-	N/A	N/A
		525	07-14BTP-41	2010/3/3	N	N	N		-	-	N/A	N/A
		665	07-14BTP-42	2010/12/22	N	N	N		-	-	N/A	N/A
7-21	Branch Technical Position - Guidance on Digital Computer Real-Time Performance	593	07-21BTP-1	2010/7/16	N	N	N		-	-	N/A	N/A
		593	07-21BTP-2	2010/11/24	N	N	N		-	-	N/A	N/A
		593	07-21BTP-3	2010/11/24	N	N	N		-	-	N/A	N/A
		593	07-21BTP-4	2010/11/24	Y	N	N		-	DCD_07-21BTP-5	6	3
		593	07-21BTP-5	2010/11/24	N	N	N		-	-	N/A	N/A

Chapter:9

SRP Section		DCD RAI Response							Other Drivers	Change ID Number for DCD forthcoming Revision	DCD Tracking Report Revision	DCD Revision
No.	Title	RAI No.	Question No.	Response Date	Impact on DCD	Impact on COLA	Impact on PRA	Response Status				
9.1.1	Criticality Safety of Fresh and	155	09.01.01.-1	2009/2/10	N	N	N		-	-	N/A	N/A
	Spent Fuel Storage and Handling	155	09.01.01-2	2009/2/10	N	N	N		-	-	N/A	N/A
		155	09.01.01-3	2009/2/10	N	N	N		-	-	N/A	N/A
		155	09.01.01-4	2009/2/10	N	N	N		-	-	N/A	N/A
		155	09.01.01-5	2009/2/10	N	N	N		-	-	N/A	N/A
		155	09.01.01-6	2009/2/10	N	N	N		-	-	N/A	N/A
		155	09.01.01-7	2009/2/10	N	N	N		-	-	N/A	N/A
		155	09.01.01-8	2009/2/10	N	N	N		-	-	N/A	N/A
		247	09.01.01-9	2009/3/30	Y	N	N		-	DCD_09.01.01-9	-	2
		247	09.01.01-10	2009/3/30	Y	Y	N		-	DCD_09.01.01-10	-	2
		382	09.01.01-11	2009/7/7	N	N	N		-	-	N/A	N/A
		382	09.01.01-12	2009/7/7	N	N	N		-	-	N/A	N/A
		382	09.01.01-13	2009/7/7	N	N	N		-	-	N/A	N/A
		382	09.01.01-14	2009/7/7	N	N	N		-	-	N/A	N/A
		382	09.01.01-15	2009/7/7	N	N	N		-	-	N/A	N/A
		382	09.01.01-16	2009/7/7	N	N	N		-	-	N/A	N/A
		382	09.01.01-17	2009/7/7	N	N	N		-	-	N/A	N/A
		382	09.01.01-18	2009/7/7	N	N	N		-	-	N/A	N/A
		382	09.01.01-19	2009/7/7	N	N	N		-	-	N/A	N/A
		382	09.01.01-20	2009/7/7	N	N	N		-	-	N/A	N/A
		382	09.01.01-21	2009/7/7	N	N	N		-	-	N/A	N/A
		647	09.01.01-22	2010/11/11	N	N	N		-	-	N/A	N/A
		647	09.01.01-23	2010/11/11	N	N	N		-	-	N/A	N/A
9.1.1	Criticality Safety of Fresh and											
	Spent Fuel Storage and Handling											
9.1.2	New and Spent Fuel Storage											
9.1.3	Spent Fuel Pool Cooling and											
	Cleanup System											
9.1.4	Light Load Handling System	507	09.01.04-16	2010/2/15	Y	N	N		-	DCD_09.01.04-16	2	3
	(Related to Refueling)	555	09.01.04-17	2010/6/4	Y	N	N		-			
				2010/6/16	Y	N	N		-	DCD_09.01.04-17	4	3
		555	09.01.04-18	2010/6/4	Y	N	N		-			
				2010/6/16	Y	N	N		-	DCD_09.01.04-18	4	3
		555	09.01.04-19	2010/6/4	Y	N	N		-			
				2010/6/16	Y	N	N		-	DCD_09.01.04-19	4	3
		555	09.01.04-20	2010/6/4	Y	N	N		-			
				2010/6/16	Y	N	N		-	DCD_09.01.04-20	4	3
		633	09.01.04-21	2010/10/21	Y	N	N		-	DCD_09.01.04-21	5	3
9.1.5	Overhead Heavy Load	563	09.01.05-14	2010/6/15	Y	N	N		-	DCD_09.01.05-14	4	3
	Handling Systems	563	09.01.05-15	2010/6/15	Y	N	N		-	DCD_09.01.05-15	4	3
		563	09.01.05-16	2010/6/15	Y	N	N		-	DCD_09.01.05-16	4	3
		563	09.01.05-17	2010/6/15	Y	N	N		-	DCD_09.01.05-17	4	3
		616	09.01.05-18	2010/9/22	Y	N	N		-	DCD_09.01.05-18	5	3
		616	09.01.05-19	2010/9/22	N	N	N		-	-	N/A	N/A
9.2.1	Station Service Water System											
		585	09.02.01-32	2010/9/24	Y	Y	N		-	DCD_09.02.01-32	6	3
		585	09.02.01-33	2010/9/24	Y	Y	N		-	DCD_09.02.01-33	6	3
		585	09.02.01-34	2010/9/24	Y	Y	N		-	DCD_09.02.01-34	6	3
		585	09.02.01-35	2010/9/24	Y	Y	N		-	DCD_09.02.01-35	6	3
		585	09.02.01-36	2010/9/24	Y	Y	N		-	DCD_09.02.01-36	6	3
		585	09.02.01-37	2010/9/24	Y	Y	N		-	DCD_09.02.01-37	6	3
		585	09.02.01-38	2010/9/24	Y	Y	N		-	DCD_09.02.01-38	6	3
		585	09.02.01-39	2010/9/24	Y	Y	N		-	DCD_09.02.01-39	6	3
		585	09.02.01-40	2010/9/24	Y	N	N		-	DCD_09.02.01-40	6	3
		585	09.02.01-41	2010/9/24	Y	Y	N		-	DCD_09.02.01-41	6	3
		585	09.02.01-42	2010/9/24	Y	N	N		-	DCD_09.02.01-42	6	3
		585	09.02.01-43	2010/9/24	Y	Y	N		-	DCD_09.02.01-43	6	3
		585	09.02.01-44	2010/9/24	Y	N	N		-	DCD_09.02.01-44	6	3
		585	09.02.01-45	2010/9/24	Y	Y	N		-	DCD_09.02.01-45	6	3

Chapter:9

SRP Section		DCD RAI Response							Other Drivers	Change ID Number for DCD forthcoming Revision	DCD Tracking Report Revision	DCD Revision
No.	Title	RAI No.	Question No.	Response Date	Impact on DCD	Impact on COLA	Impact on PRA	Response Status				
		585	09.02.01-46	2010/9/24	Y	Y	N		-	DCD_09.02.01-46	6	3
		585	09.02.01-47	2010/9/24	N	N	N		-	-	N/A	N/A
		585	09.02.01-48	2010/9/24	N	N	N		-	-	N/A	N/A
		585	09.02.01-49	2010/9/24	Y	Y	N		-	DCD_09.02.01-49	6	3
		585	09.02.01-50	2010/9/24	N	N	N		-	-	N/A	
		585	09.02.01-51	2010/9/24	Y	Y	N		-	DCD_09.02.01-51	6	3
		585	09.02.01-52	2010/9/24	Y	Y	N		-	DCD_09.02.01-52	6	3
		585	09.02.01-53	2010/9/24	N	N	N		-	-	N/A	N/A
		585	09.02.01-54	2010/9/24	N	N	N		-	-	N/A	N/A
		585	09.02.01-55	2010/9/24	Y	Y	N		-	DCD_09.02.01-55	6	3
		585	09.02.01-56	2010/9/24	N	N	N		-	-	N/A	N/A
		585	09.02.01-57	2010/9/24	Y	Y	N		-	DCD_09.02.01-57	6	3
		585	09.02.01-58	2010/9/24	Y	Y	N		-	DCD_09.02.01-58	6	3
		585	09.02.01-59	2010/9/24	Y	Y	N		-	DCD_09.02.01-59	6	3
9.2.2	Reactor Auxiliary	567	09.02.02-46	2010/5/7	Y	N	N		-	DCD_09.02.02-46	3	3
	Cooling Water Systems	571	09.02.02-47	2010/6/8	N	N	N		-	-	N/A	N/A
		571	09.02.02-48	2010/6/8	Y	N	N		-	DCD_09.02.02-48	TBD	
		571	09.02.02-49	2010/6/8	N	N	N		-	-	N/A	N/A
		571	09.02.02-50	2010/6/8	Y	N	N		-	DCD_09.02.02-50	TBD	
		571	09.02.02-51	2010/6/8	Y	N	N		-	DCD_09.02.02-51	TBD	
		571	09.02.02-52	2010/6/8	Y	N	N		-	DCD_09.02.02-52	TBD	
		571	09.02.02-53	2010/6/8	Y	N	N		-	DCD_09.02.02-53	TBD	
		571	09.02.02-54	2010/6/8	N	N	N		-	-	N/A	N/A
		571	09.02.02-55	2010/6/8	Y	N	N		-	DCD_09.02.02-55	TBD	
		571	09.02.02-56	2010/6/8	Y	N	N		-	DCD_09.02.02-56	TBD	
		571	09.02.02-57	2010/6/8	Y	N	N		-	DCD_09.02.02-57	TBD	
		571	09.02.02-58	2010/6/8	Y	N	N		-	DCD_09.02.02-58	TBD	
		571	09.02.02-59	2010/6/8	Y	N	N		-	DCD_09.02.02-59	TBD	
		571	09.02.02-60	2010/6/8	N	N	N		-	-	N/A	N/A
		571	09.02.02-61	2010/6/8	N	N	N		-	-	N/A	N/A
		571	09.02.02-62	2010/6/8	Y	N	N		-	DCD_09.02.02-62	TBD	
		571	09.02.02-63	2010/6/8	Y	N	N		-	DCD_09.02.02-63	TBD	
		571	09.02.02-64	2010/6/8	Y	N	N		-	DCD_09.02.02-64	TBD	
		571	09.02.02-65	2010/6/8	Y	N	N		-	DCD_09.02.02-65	TBD	
		571	09.02.02-66	2010/6/8	Y	N	N		-	DCD_09.02.02-66	TBD	
		571	09.02.02-67	2010/6/8	Y	N	N		-	DCD_09.02.02-67	TBD	
		571	09.02.02-68	2010/6/8	Y	N	N		-	DCD_09.02.02-68	TBD	
		576	09.02.02-69	2010/6/8	N	N	N		-	-	N/A	N/A
		584	09.02.02-70	2010/6/10	Y	N	N		-	DCD_09.02.02-70	TBD	
		584	09.02.02-71	2010/6/10	Y	N	N		-	DCD_09.02.02-71	TBD	
		584	09.02.02-72	2010/6/10	Y	N	N		-	DCD_09.02.02-72	TBD	
		584	09.02.02-73	2010/6/10	N	N	N		-	-	N/A	N/A
		584	09.02.02-74	2010/6/10	N	N	N		-	-	N/A	N/A
		584	09.02.02-75	2010/6/10	N	N	N		-	-	N/A	N/A
		584	09.02.02-76	2010/6/10	Y	N	N		-	DCD_09.02.02-76	TBD	
		584	09.02.02-77	2010/6/10	Y	N	N		-	DCD_09.02.02-77	TBD	
		584	09.02.02-78	2010/6/10	Y	N	N		-	DCD_09.02.02-78	TBD	
		584	09.02.02-79	2010/6/10	N	N	N		-	-	N/A	N/A

Chapter:9

SRP Section		DCD RAI Response							Other Drivers	Change ID Number for DCD forthcoming Revision	DCD Tracking Report Revision	DCD Revision
No.	Title	RAI No.	Question No.	Response Date	Impact on DCD	Impact on COLA	Impact on PRA	Response Status				
9.2.4	Potable and Sanitary Water Systems											
9.2.5	Ultimate Heat Sink	286	09.02.05-1	2009/5/12	N	N	N		-	-	N/A	N/A
				2010/7/7	Y	N	N		-	DCD_09.02.05-1	4	3
		286	09.02.05-2	2009/5/12	N	N	N		-	-	N/A	N/A
				2010/7/7	Y	N	N		-	DCD_09.02.05-2	4	3
		286	09.02.05-3	2009/5/12	N	N	N		-	-	N/A	N/A
				2010/7/7	Y	N	N		-	DCD_09.02.05-3	4	3
		286	09.02.05-4	2009/5/12	N	N	N		-	-	N/A	N/A
				2010/7/7	Y	N	N		-	DCD_09.02.05-4	4	3
		286	09.02.05-5	2009/5/12	N	N	N		-	-	N/A	N/A
				2010/7/7	N	N	N		-	-	N/A	N/A
		286	09.02.05-6	2009/5/12	N	N	N		-	-	N/A	N/A
				2010/7/7	Y	N	N		-	DCD_09.02.05-6	4	3
		286	09.02.05-7	2009/5/12	N	N	N		-	-	N/A	N/A
				2010/7/7	Y	N	N		-	DCD_09.02.05-7	4	3
		286	09.02.05-8	2009/5/12	N	N	N		-	-	N/A	N/A
				2010/7/7	Y	N	N		-	DCD_09.02.05-8	4	3
		286	09.02.05-9	2009/5/12	N	N	N		-	-	N/A	N/A
				2010/7/7	Y	N	N		-	DCD_09.02.05-9	4	3
9.2.6	Condensate Storage Facilities											
9.3.1	Compressed Air System											
9.3.2	Process and Post-accident Sampling Systems	461	09.03.02-12	2009/11/17	Y	N	N		-	DCD_09.03.02-12	1	3
		526	09.03.02-13	2010/4/7	Y	Y	N		-	DCD_09.03.02-13	3	3
		526	09.03.02-14	2010/4/7	N	N	N		-	-	N/A	N/A
		526	09.03.02-15	2010/4/7	Y	N	N		-	DCD_09.03.02-15	3	3
		526	09.03.02-16	2010/4/7	N	N	N		-	-	N/A	N/A
9.3.3	Equipment and Floor Drainage System	426	09.03.03-15	2009/9/14	Y	N	N		-	DCD_09.03.03-15	-	2
		426	09.03.03-16	2009/9/14	Y	N	N		-	DCD_09.03.03-16	0	3
		426	09.03.03-17	2009/9/14	Y	N	N		-	DCD_09.03.03-17	-	2
		591	09.03.03-18	2010/7/7	N	N	N		-	-	N/A	N/A
		591	09.03.03-19	2010/7/7	Y	N	N		-	DCD_09.03.03-19	4	3
9.3.4	Chemical and Volume Control Syst (PWR) (Including Boron Recovery System)	384	09.03.04-10	2009/7/17	N	N	N		-	-	N/A	N/A
				2010/4/7	Y	Y	N		-	DCD_09.03.04-10	3	3
9.4.1	Control Room Area Ventilation System	63	09.04.01-14	2008/10/3	N	N	N	fin.	-			
				2010/6/29	N	N	N		-	-	N/A	N/A
		327	09.04.01-5	2009/6/19	N	N	N		-			
				2010/6/29	N	N	N		-	-	N/A	N/A
		327	09.04.01-9	2010/1/29	Y	N	N		-	DCD_09.04.01-9	2	3
		475	09.04.01-12A	2009/11/20	Y	Y	N		-	DCD_09.04.01-12A	1	3
		475	09.04.01-13A	2009/11/20	Y	N	N		-	DCD_09.04.01-13A	1	3
		475	09.04.01-14A	2009/11/20	N	N	N		-	-	N/A	N/A
		484	09.04.01-15A	2009/12/9	N	N	N		-	-	N/A	N/A
		582	09.04.01-16	2010/7/16	Y	N	N		-	DCD_09.04.01-16	4	3
		582	09.04.01-17	2010/7/16	Y	N	N		-	DCD_09.04.01-17	4	3
		582	09.04.01-18	2010/7/16	N	N	N		-	-	N/A	N/A
		582	09.04.01-19	2010/7/16	N	N	N		-	-	N/A	N/A
		582	09.04.01-20	2010/7/16	Y	N	N		-	DCD_09.04.01-20	4	3
		582	09.04.01-21	2010/7/16	Y	N	N		-	DCD_09.04.01-21	4	3
		582	09.04.01-22	2010/7/16	Y	N	N		-	DCD_09.04.01-22	4	3
		582	09.04.01-23	2010/7/16	N	N	N		-	-	N/A	N/A
		642	09.04.01-24	2010/11/5	Y	N	N		-	DCD_09.04.01-24	5	3
9.4.2	Spent Fuel Pool Area	539	09.04.02-4	2010/4/1	Y	N	N		-	DCD_09.04.02-4	3	3

Chapter:9

SRP Section		DCD RAI Response							Other Drivers	Change ID Number for DCD forthcoming Revision	DCD Tracking Report Revision	DCD Revision
No.	Title	RAI No.	Question No.	Response Date	Impact on DCD	Impact on COLA	Impact on PRA	Response Status				
	Ventilation System	539	09.04.02-5	2010/4/1	Y	N	N		-	DCD_09.04.02-5	3	3
		592	09.04.02-6	2010/7/7	Y	N	N		-	DCD_09.04.02-6	4	3
9.4.3	Auxiliary and Radwaste Area	483	09.04.03-08	2010/2/5	Y	N	N		-	DCD_09.04.03-08	2	3
	Ventilation System	483	09.04.03-09	2010/2/5	Y	N	N		-	DCD_09.04.03-09	2	3
		483	09.04.03-10	2010/2/5	N	N	N		-	-	N/A	N/A
		634	09.04.03-11	2010/10/15	Y	N	N		-	DCD_09.04.03-11	5	3
		634	09.04.03-12	2010/10/15	Y	N	N		-	DCD_09.04.03-12	5	3
		634	09.04.03-13	2010/10/15	Y	N	N		-	DCD_09.04.03-13	5	3
9.4.4	Turbine Area Ventilation System	541	09.04.03-4	2010/3/30	N	N	N		-	-	N/A	N/A
		541	09.04.04-5	2010/3/30	Y	N	N		-	DCD_09.04.04-5	3	3
		586	09.04.04-6	2010/6/10	N	N	N		-	-	N/A	N/A
9.4.5	Engineered Safety Feature	64	09.04.05-1/9.4.5-3	2008/10/6	N	N	N	fin.	-			
	Ventilation System			2010/6/29	N	N	N		-	-	N/A	N/A
		64	09.04.05-1/9.4.5-4	2008/10/6	N	N	N	fin.	-			
				2010/6/29	N	N	N		-	-	N/A	N/A
		64	09.04.05-1/9.4.5-22	2008/10/6	N	N	N	fin.	-			
				2010/6/29	N	N	N		-	-	N/A	N/A
		356	09.04.05-3	2009/7/17	N	N	N		-			
				2010/6/29	N	N	N		-	-	N/A	N/A
		356	09.04.05-4	2009/7/17	N	N	N		-			
				2010/6/29	N	N	N		-	-	N/A	N/A
		356	09.04.05-9	2009/7/17	N	N	N		-			
				2010/6/29	N	N	N		-	-	N/A	N/A
		474	09.04.05-10	11/13/2009	Y	N	N		-	DCD_09.04.05-10	0	3
		583	09.04.05-11	2010/6/22	Y	N	N		-	DCD_09.04.05-11	4	3
		583	09.04.05-12	2010/6/22	Y	N	N		-	DCD_09.04.05-12	4	3
		666	09.04.05-13	2010/12/20	N	N	N		-	-	N/A	N/A
9.5.1	Fire Protection Program	537	09.05.01-18	04/13/2010	Y	N	N		-	DCD_09.05.01-18	3	3
		537	09.05.01-19	04/13/2010	Y	N	N		-	DCD_09.05.01-19	3	3
9.5.2	Communications Systems											
9.5.3	Lighting Systems											
9.5.4	Emergency Diesel Engine Fuel	467	09.05.04-43	11/10/2009	Y	Y	N		-	DCD_09.05.04-43	1	3
	Oil Storage and Transfer System	468	09.05.04-44	2009/12/10	Y	Y	N		-	DCD_09.05.04-44	1	3
		468	09.05.04-45	2009/12/10	Y	N	N		-	DCD_09.05.04-45	1	3
		468	09.05.04-46	2009/12/10	Y	N	N		-	DCD_09.05.04-46	1	3
		468	09.05.04-47	2009/12/10	Y	N	N		-	DCD_09.05.04-47	1	3
		468	09.05.04-48	2009/12/10	Y	N	N		-	DCD_09.05.04-48	1	3
		468	09.05.04-49	2009/12/10	N	N	N		-	-	N/A	N/A
		565	09.05.04-50	2010/6/15	Y	N	N		-	DCD_09.05.04-50	4	3
		565	09.05.04-51	2010/6/15	Y	N	N		-	DCD_09.05.04-51	4	3
9.5.5	Emergency Diesel Engine											
	Cooling Water System											
9.5.6	Emergency Diesel Engine											
	Starting System	504	09.05.06-24	12/23/09	Y	N	N		-	DCD_09.05.06-24	1	3
		504	09.05.06-25	12/23/09	Y	N	N		-	DCD_09.05.06-25	1	3
9.5.7	Emergency Diesel Engine	469	09.05.07-18	11/6/2009	N	N	N		-	-	N/A	N/A
	Lubrication System	469	09.05.07-19	11/6/2009	N	N	N		-	-	N/A	N/A
		506	09.05.07-20	2010/1/29	Y	N	N		-	DCD_09.05.07-20	2	3
		506	09.05.07-21	2010/1/29	N	N	N		-	-	N/A	N/A
		506	09.05.07-22	2010/1/29	Y	N	N		-	DCD_09.05.07-22	2	3

Chapter:9

SRP Section		DCD RAI Response							Other Drivers	Change ID Number for DCD forthcoming Revision	DCD Tracking Report Revision	DCD Revision
No.	Title	RAI No.	Question No.	Response Date	Impact on DCD	Impact on COLA	Impact on PRA	Response Status				
		506	09.05.07-23	2010/1/29	Y	N	N		-	DCD_09.05.07-23	2	3
		556	09.05.07-24	2010/4/27	Y	N	N		-	DCD_09.05.07-24	3	3
9.5.8	Emergency Diesel Engine	470	09.05.08-18	2009/12/2	Y	N	N		-	DCD_09.05.08-18	1	3
	Combustion Air Intake and	470	09.05.08-19	2009/12/2	N	N	N		-	-	N/A	N/A
	Exhaust System	470	09.05.08-20	2009/12/2	Y	N	N		-	DCD_09.05.08-20	1	3
		470	09.05.08-21	2009/12/2	Y	N	N		-	DCD_09.05.08-21	1	3
		470	09.05.08-22	2009/12/2	Y	N	N		-	DCD_09.05.08-22	1	3
		505	09.05.08-23	2010/2/1	N	N	N		-	-	N/A	N/A
		505	09.05.08-24	2010/2/1	N	N	N		-	-	N/A	N/A
		505	09.05.08-25	2010/2/1	Y	N	N		-	DCD_09.05.08-25	2	3
		557	09.05.08-26	2010/6/14	Y	N	N		-	DCD_09.05.08-26	5	3
		618	09.05.08-27	2010/11/4	Y	N	N		-	DCD_09.05.08-27	5	3

Chapter:13

SRP Section		DCD RAI Response							Other Drivers	Change ID Number for DCD forthcoming Revision	DCD Tracking Report Revision	DCD Revision
No.	Title	RAI No.	Question No.	Response Date	Impact on DCD	Impact on COLA	Impact on PRA	Response Status				
13.1.1	Management and Technical Support Organization											
13.1.2-13.1.3	Operating Organization											
13.2.1	Reactor Operator Requalification Program; Reactor Operator Training											
13.2.2	Non-Licensed Plant Staff Training											
13.3	Emergency Planning											
13.4	Operational Programs											
13.5.1.1	Administrative Procedures - General											
13.5.1.2	Administrative Procedures - Initial Test Program											
13.5.2.1	Operating and Emergency Operating Procedures											
13.6	Physical Security	282	13.06-1	2009/6/1	N	N	N		-	-	N/A	N/A
		282	13.06-3	2009/5/15	N	N	N		-	-	N/A	N/A
		282	13.06-4	2009/6/1	N	N	N		-	-	N/A	N/A
		282	13.06-5	2009/4/30	Y	N	N		-	DCD-13.06-5	3	2
		282	13.06-6	2009/5/15	Y	N	N		-	DCD-13.06-6	3	2
		282	13.06-7	2009/6/1	N	N	N		-	-	N/A	N/A
		282	13.06-8	2009/5/15	N	N	N		-	-	N/A	N/A
		282	13.06-9	2009/6/1	N	N	N		-	-	N/A	N/A
		282	13.06-10	2009/6/19	Y	N	N		-	DCD_13.06-10	3	2
		282	13.06-11	2009/6/1	N	N	N		-	-	N/A	N/A
		282	13.06-12	2009/4/30	Y	N	N		-	DCD-13.06-12	3	2
		282	13.06-13	2009/4/30	N	N	N		-	-	N/A	N/A
		282	13.06-14	2009/4/30	N	N	N		-	-	N/A	N/A
		282	13.06-15	2009/4/30	N	N	N		-	-	N/A	N/A
		282	13.06-16	2009/4/30	N	N	N		-	-	N/A	N/A
		282	13.06-17	2009/5/15	N	N	N		-	-	N/A	N/A
		282	13.06-18	2009/5/15	N	N	N		-	-	N/A	N/A
		282	13.06-19	2009/4/30	N	N	N		-	-	N/A	N/A
		282	13.06-20	2009/4/30	N	N	N		-	-	N/A	N/A
		282	13.06-21	2009/5/15	Y	Y	N		-	DCD-13.06-21	3	2
		282	13.06-22	2009/6/19	N	N	N		-	-	N/A	N/A
		282	13.06-23	2009/6/19	N	N	N		-	-	N/A	N/A
		282	13.06-24	2009/6/19	N	N	N		-	-	N/A	N/A
		282	13.06-25	2009/6/19	N	N	N		-	-	N/A	N/A
		282	13.06-26	2009/6/1	N	N	N		-	-	N/A	N/A
		282	13.06-27	2009/6/1	N	N	N		-	-	N/A	N/A
		282	13.06-28	2009/6/1	N	N	N		-	-	N/A	N/A

Chapter:13

SRP Section		DCD RAI Response							Other Drivers	Change ID Number for DCD forthcoming Revision	DCD Tracking Report Revision	DCD Revision
No.	Title	RAI No.	Question No.	Response Date	Impact on DCD	Impact on COLA	Impact on PRA	Response Status				
		282	13.06-29	2009/6/1	N	N	N		-	-	N/A	N/A
		282	13.06-30	2009/6/1	N	N	N		-	-	N/A	N/A
		282	13.06-31	2009/6/1	N	N	N		-	-	N/A	N/A
		282	13.06-32	2009/6/1	N	N	N		-	-	N/A	N/A
		282	13.06-33	2009/6/1	N	N	N		-	-	N/A	N/A
		282	13.06-34	2009/5/15	N	N	N		-	-	N/A	N/A
		282	13.06-35	2009/6/19	N	N	N		-	-	N/A	N/A
		282	13.06-36	2009/6/19	Y	N	N		-	DCD_13.06-36	3	2
		282	13.06-37	2009/4/30	N	N	N		-	-	N/A	N/A
		282	13.06-38	2009/5/15	N	N	N		-	-	N/A	N/A
		282	13.06-39	2009/5/15	N	N	N		-	-	N/A	N/A
		282	13.06-40	2009/5/15	N	N	N		-	-	N/A	N/A
		282	13.06-41	2009/5/15	N	N	N		-	-	N/A	N/A
		282	13.06-42	2009/5/15	N	N	N		-	-	N/A	N/A
		282	13.06-44	2009/6/19	N	N	N		-	-	N/A	N/A
		282	13.06-45	2009/5/15	N	N	N		-	-	N/A	N/A
		282	13.06-46	2009/5/15	N	N	N		-	-	N/A	N/A
		282	13.06-47	2009/5/15	N	N	N		-	-	N/A	N/A
		282	13.06-48	2009/6/1	N	N	N		-	-	N/A	N/A
		282	13.06-49	2009/6/1	N	N	N		-	-	N/A	N/A
		282	13.06-50	2009/6/19	N	N	N		-	-	N/A	N/A
		282	13.06-51	2009/6/1	N	N	N		-	-	N/A	N/A
		282	13.06-52	2009/4/30	N	N	N		-	-	N/A	N/A
		282	13.06-53	2009/5/15	N	N	N		-	-	N/A	N/A
		282	13.06-54	2009/4/30	N	N	N		-	-	N/A	N/A
		282	13.06-55	2009/6/1	N	N	N		-	-	N/A	N/A
		282	13.06-56	2009/4/30	N	N	N		-	-	N/A	N/A
		282	13.06-57	2009/5/15	N	N	N		-	-	N/A	N/A
		282	13.06-58	2009/5/15	N	N	N		-	-	N/A	N/A
		282	13.06-59	2009/5/15	N	N	N		-	-	N/A	N/A
		282	13.06-60	2009/4/30	N	N	N		-	-	N/A	N/A
		282	13.06-61	2009/5/15	N	N	N		-	-	N/A	N/A
		282	13.06-66	2009/6/19	N	N	N		-	-	N/A	N/A
		282	13.06-67	2009/6/19	N	N	N		-	-	N/A	N/A
		282	13.06-70	2009/4/30	N	N	N		-	-	N/A	N/A
		282	13.06-71	2009/5/15	N	N	N		-	-	N/A	N/A
		282	13.06-73	2009/6/1	N	N	N		-	-	N/A	N/A
		282	13.06-74	2009/6/1	N	N	N		-	-	N/A	N/A
		282	13.06-75	2009/6/1	N	N	N		-	-	N/A	N/A
		282	13.06-76	2009/6/1	N	N	N		-	-	N/A	N/A
		282	13.06-77	2009/4/30	N	N	N		-	-	N/A	N/A
		282	13.06-78	2009/4/30	N	N	N		-	-	N/A	N/A
		282	13.06-79	2009/5/15	N	N	N		-	-	N/A	N/A
		282	13.06-80	2009/5/15	N	N	N		-	-	N/A	N/A
		282	13.06-81	2009/6/1	N	N	N		-	-	N/A	N/A
		282	13.06-82	2009/4/30	N	N	N		-	-	N/A	N/A
		282	13.06-83	2009/6/19	N	N	N		-	-	N/A	N/A
		282	13.06-84	2009/6/1	N	N	N		-	-	N/A	N/A
		282	13.06-85	2009/5/15	N	N	N		-	-	N/A	N/A
		282	13.06-86	2009/6/1	N	N	N		-	-	N/A	N/A
		282	13.06-87	2009/4/30	N	N	N		-	-	N/A	N/A
		282	13.06-88	2009/4/30	N	N	N		-	-	N/A	N/A
		282	13.06-89	2009/4/30	N	N	N		-	-	N/A	N/A
		282	13.06-90	2009/4/30	N	N	N		-	-	N/A	N/A
		282	13.06-91	2009/4/30	N	N	N		-	-	N/A	N/A
		282	13.06-92	2009/4/30	N	N	N		-	-	N/A	N/A
		282	13.06-93	2009/5/15	N	N	N		-	-	N/A	N/A
		282	13.06-103	2009/6/19	N	N	N		-	-	N/A	N/A
		283	13.06.02-6	2009/6/19	N	N	N		-	-	N/A	N/A
		283	13.06.02-7	2009/6/19	N	N	N		-	-	N/A	N/A
		613	13.06.02-19	10/20/2010	Y	N			-	DCD_13.06.02-19	6	3
		613	13.06.02-20	10/20/2010	Y	N			-	DCD_13.06.02-20	6	3
		613	13.06.02-21	10/20/2010	Y	N			-	DCD_13.06.02-21	6	3
		613	13.06.02-22	10/20/2010	Y	N			-	DCD_13.06.02-22	6	3
		613	13.06.02-23	10/20/2010	Y	N			-	DCD_13.06.02-23	6	3
		613	13.06.02-24	10/20/2010	Y	N			-	DCD_13.06.02-24	6	3
		613	13.06.02-25	10/20/2010	Y	N			-	DCD_13.06.02-25	6	3
		613	13.06.02-26	10/20/2010	Y	N			-	DCD_13.06.02-26	6	3
13.7	Fitness for Duty											

Chapter:13

SRP Section		DCD RAI Response							Other Drivers	Change ID Number for DCD forthcoming Revision	DCD Tracking Report Revision	DCD Revision
No.	Title	RAI No.	Question No.	Response Date	Impact on DCD	Impact on COLA	Impact on PRA	Response Status				
App.13AA	Design, Construction and											
	Pre-operational Activities											

Chapter:19

SRP Section		DCD RAI Response							Other Drivers	Change ID Number for DCD forthcoming Revision	DCD Tracking Report Revision	DCD Revision
No.	Title	RAI No.	Question No.	Response Date	Impact on DCD	Impact on COLA	Impact on PRA	Response Status				
19	Probabilistic Risk Assessment	443	19-391	2009/10/1	N	N	N		-	-	N/A	N/A
	and Severe Accident Evaluation	443	19-392	2009/10/1	N	N	N		-	-	N/A	N/A
	for New Reactors	443	19-393	2009/10/1	Y	N	N		-	DCD_19-393	-	2
		443	19-394	2009/10/1	N	N	N		-	-	N/A	N/A
		443	19-395	2009/10/1	N	N	N		-	-	N/A	N/A
		443	19-396	2009/10/1	Y	N	N		-	DCD_19-396	0	3
		443	19-397	2009/10/1	Y	N	N		-	DCD_19-397	0	3
		454	19-398	2009/10/9	N	N	Y		-	-	N/A	N/A
		454	19-399	2009/10/9	N	N	Y		-	-	N/A	N/A
		454	19-400	2009/10/9	N	N	Y		-	-	N/A	N/A
		454	19-401	2009/10/9	Y	N	Y		-	DCD_19-401	-	2
		479	19-402	2009/11/25	Y	N	N		-	DCD_19-402	1	3
		479	19-403	2009/11/25	Y	N	N		-	DCD_19-403	1	3
		479	19-404	2009/11/25	Y	N	N		-	DCD_19-404	1	3
		479	19-405	2009/11/25	N	N	N		-	-	N/A	N/A
		479	19-406	2009/11/25	N	N	N		-	-	N/A	N/A
		480	19-*** (1)	2009/11/26	N	N	N		-	-	N/A	N/A
		480	19-*** (2)	2009/11/26	N	N	N		-	-	N/A	N/A
		480	19-*** (3)	2009/11/26	N	N	N		-	-	N/A	N/A
		480	19-*** (4)	2009/11/26	N	N	N		-	-	N/A	N/A
		480	19-*** (5)	2009/11/26	N	N	N		-	-	N/A	N/A
		480	19-*** (6)	2009/11/26	N	N	N		-	-	N/A	N/A
		528	19-407	2010/3/3	Y	N	N		-	DCD_19-407	2	3
		528	19-408	2010/3/3	Y	N	N		-	DCD_19-408	2	3
		528	19-409	2010/3/3	Y	N	N		-	DCD_19-409	2	3
		528	19-410	2010/3/3	Y	N	N		-	DCD_19-410	2	3
		528	19-411	2010/3/3	N	N	N		-	-	N/A	N/A
		528	19-412	2010/3/3	Y	N	N		-	DCD_19-412	3	3
		528	19-413	2010/3/3	Y	N	N		-	DCD_19-413	3	3
		528	19-414	2010/3/3	Y	N	N		-	DCD_19-414	2	3
		528	19-415	2010/3/3	Y	N	N		-	DCD_19-415	2	3
		528	19-416	2010/3/3	Y	N	N		-	DCD_19-416	2	3
		528	19-417	2010/3/3	Y	N	N		-	DCD_19-417	2	3
		528	19-418	2010/3/3	Y	N	N		-	DCD_19-418	2	3
		528	19-419	2010/3/3	Y	N	N		-	DCD_19-419	2	3
		528	19-420	2010/3/3	Y	N	N		-	DCD_19-420	2	3
		528	19-421	2010/3/3	Y	N	N		-	DCD_19-421	3	3
		528	19-422	2010/3/3	Y	N	N		-	DCD_19-422	2	3
		564	19-423	2010/4/28	Y	N	N		-	DCD_19-423	3	3
		564	19-424	2010/4/28	Y	N	N		-	DCD_19-424	3	3
		564	19-425	2010/4/28	Y	N	N		-	DCD_19-425	3	3
		564	19-426	2010/4/28	Y	Y	N		-	DCD_19-426	3	3
		564	19-427	2010/4/28	Y	N	N		-	DCD_19-427	3	3
		564	19-428	2010/4/28	Y	N	N		-	DCD_19-428	3	3
		566	19-429	2010/4/28	Y	N	N		-	DCD_19-429	3	3
			19-430									
			19-431									
			19-432									
			19-433									
			19-434									
			19-435									
		601	19-436	2010/7/26	Y	N	N		-	DCD_19-436	4	3
		601	19-437	2010/7/26	Y	N	N		-	DCD_19-437	4	3
		607	19-438	2010/9/3	Y	N	Y		-	DCD_19-438	5	3
		608	19-439	2010/9/3	Y	N	N		-	DCD_19-439	-	3
		608	19-440	2010/9/3	Y	N	N		-	DCD_19-440	5	3
		609	19-441	2010/9/3	Y	N	N		-	DCD_19-441	-	3
		610	19-442	2010/9/3	N	N	N		-	-	N/A	N/A
		619	19-443	2010/9/10	N	N	N		-	-	N/A	N/A
		622	19-444	2010/9/29	N	N	Y		-	-	N/A	N/A
		622	19-445	2010/9/29	N	N	N		-	-	N/A	N/A
		622	19-446	2010/9/29	N	N	Y		-	-	N/A	N/A
		627	19-447	2010/11/1	Y	N	N		-	DCD_19-447	-	3
		627	19-448	2010/11/29	N	N	N		-	-	N/A	N/A
		627	19-449	2010/11/1	Y	N	Y		-	DCD_19-449	-	3
		627	19-450	2010/11/1	Y	N	Y		-	DCD_19-450	-	3
		627	19-451	2010/11/1	N	N	N		-	-	N/A	N/A
		627	19-452	2010/11/1	N	N	N		-	-	N/A	N/A
		627	19-453	2010/11/1	N	N	N		-	-	N/A	N/A
		627	19-454	11/1/2010	Y	N	N		-	DCD_19-454	5	3
		639	19-455	10/29/2010	Y	N	N		-	DCD_19-455	5	3
		639	19-456	10/29/2010	Y	N	N		-	DCD_19-456	5	3

Chapter:19

SRP Section		DCD RAI Response							Other Drivers	Change ID Number for DCD forthcoming Revision	DCD Tracking Report Revision	DCD Revision
No.	Title	RAI No.	Question No.	Response Date	Impact on DCD	Impact on COLA	Impact on PRA	Response Status				
		639	19-457	10/29/2010	Y	N	N		-	DCD_19-457	5	3
		639	19-458	10/29/2010	Y	N	Y		-	DCD_19-458	5	3
		639	19-459	10/29/2010	N	N	N		-	-	N/A	N/A
		639	19-460	10/29/2010	N	N	N		-	-	N/A	N/A
		639	19-461	10/29/2010	N	N	Y		-	-	N/A	N/A
		639	19-462	10/29/2010	N	N	N		-	-	N/A	N/A
		639	19-463	10/29/2010	N	N	N		-	-	N/A	N/A
		639	19-464	10/29/2010	Y	N	Y		-	DCD_19-464	5	3
		639	19-465	10/29/2010	N	N	N		-	-	N/A	N/A
		640	19-466	10/29/2010	N	N	N		-	-	N/A	N/A
		640	19-467	10/29/2010	Y	N	N		-	DCD_19-467	5	3
		640	19-468	10/29/2010	N	N	N		-	-	N/A	N/A
		640	19-469	10/29/2010	Y	N	N		-	DCD_19-469	5	3
		640	19-470	10/29/2010	Y	N	N		-	DCD_19-470	5	3
		640	19-471	10/29/2010	N	N	Y		-	-	N/A	N/A
		640	19-472	10/29/2010	Y	N	Y		-	DCD_19-472	-	3
		641	19-473	10/29/2010	N	N	N		-	-	N/A	N/A
		641	19-474	10/29/2010	N	N	N		-	-	N/A	N/A
		641	19-475	10/29/2010	N	N	N		-	-	N/A	N/A
		641	19-476	10/29/2010	Y	N	Y		-	DCD_19-476	-	3
		641	19-477	10/29/2010	N	N	Y		-	-	N/A	N/A
		641	19-478	10/29/2010	Y	N	N		-	DCD_19-478	5	3
		641	19-479	10/29/2010	Y	N	Y		-	DCD_19-479	-	3
		641	19-480	10/29/2010	N	N	N		-	-	N/A	N/A
		641	19-481	10/29/2010	N	N	N		-	-	N/A	N/A
		641	19-482	10/29/2010	N	N	N		-	-	N/A	N/A
		641	19-483	10/29/2010	Y	N	Y		-	DCD_19-483	-	3
		649	19-484	2010/11/12	N	N	N		-	-	N/A	N/A
		649	19-485	2010/11/12	Y	N	Y		-	DCD_19-485	6	3
		649	19-486	2010/11/12	N	N	Y		-	-	N/A	N/A
		649	19-487	2010/11/12	N	N	Y		-	-	N/A	N/A
		649	19-488	2010/11/12	Y	N	N		-	DCD_19-488	-	3
		649	19-489	2010/11/12	Y	N	Y		-	DCD_19-489	6	3
		649	19-490	2010/11/12	Y	N	N		-	DCD_19-490	6	3
		649	19-491	2010/11/12	Y	N	Y		-	DCD_19-491	6	3
		669	19-492	2010/12/27	Y	N	N		-	DCD_19-492	TBD	
		669	19-493	2010/12/27	Y	N	Y		-	DCD_19-493	TBD	
		669	19-494	XX/YY/2010								
19.1	Determining the Technical Adequacy of Probabilistic Risk Assessment Results for Risk-Informed Activities	577	19.01-1	2010/5/26	Y	N	N		-	DCD_19.01-1	4	3
		621	19.01-2	2010/9/29	Y	N	N		-	DCD_19.01-2	5	3
		621	19.01-3	2010/9/29	Y	N	N		-	DCD_19.01-3	5	3
		621	19.01-4	2010/9/29	Y	N	N		-	DCD_19.01-4	5	3
		621	19.01-5	2010/9/29	Y	N	N		-	DCD_19.01-5	5	3
		621	19.01-6	2010/9/29	Y	N	Y		-	DCD_19.01-6	5	3
		621	19.01-7	2010/9/29	Y	N	Y		-	DCD_19.01-7	5	3
		-	-	-	-	-	-	-	COL 19.3(5) deleted	MAP-19-001	-	2
		628	19.01-8	2010/10/14	Y	N	N		-	DCD_19.01-8	5	3
		668	19.01-9	2010/12/27	N	N	N		-	-	N/A	N/A
		668	19.01-10	2010/12/27	Y	N	N		-	DCD_19.01-9	TBD	
		668	19.01-11	2010/12/27	Y	N	N		-	DCD_19.01-10	TBD	
19.2	Review of Risk Information Used to Support Permanent Plant - Specific Changes to the Licensing Basis: General Guidance											

Chapter:19

SRP Section		DCD RAI Response							Other Drivers	Change ID Number for DCD forthcoming Revision	DCD Tracking Report Revision	DCD Revision
No.	Title	RAI No.	Question No.	Response Date	Impact on DCD	Impact on COLA	Impact on PRA	Response Status				

Chapter 1

Page	Location (e.g., subsection with paragraph/ sentence/ item, table with row/column, or figure)	Description of Change
1.2-32	Section 1.2.1.5.4.4	RAI-585-4464 Question 09.02.01-33 "Discharge pit" has been deleted since ESWS does not discharge into one and been replaced with "UHS".
1.8-11	Table 1.8-2 Sheet 7 COL 3.7(7)	Change: "*The COL Applicant is to determine the allowable dynamic bearing capacity based on site conditions, and to evaluate the bearing load to this capacity."* to *"The COL Applicant is to determine the allowable static and dynamic bearing capacities based on site conditions, including the properties of fill concrete placed to provide a level surface for the bottom of foundation elevations, and to evaluate the bearing loads to these capacities."* Reason: Provided clarification [RAI 643-4967, Question 03.07.01-12]
1.8-12	Table 1.8-2 Sheet 8 COL 3.7(16)	Change: "*The COL Applicant is to verify the site-specific applicability of these monitors, and determine if there is a need for the installation of additional instrumentation for the measurement of the free-field ground motion based on conditions and requirements specific to the site."* to "*The COL Applicant shall provide free-field seismic instrumentation in the vicinity of the power block area at surface grade, which shall be used for shutdown determination, unless otherwise justified. Any such justification shall be based on conditions and requirements specific to the site, and shall include justification for evaluation of OBE exceedance using only measurements from instrumentation installed on the buildings and the structures of the US-APWR standard plant."* Reason: Clarified to reflect that the COL Applicant is expected to provide free-field seismic instrumentation in the vicinity of the power block area at surface grade, which shall be used for shutdown determination, unless otherwise justified. [RAI 632-5041, Question 03.07.04-4]
1.8-12	Table 1.8-2 Sheet 8 COL 3.7(22)	Change: "*The COL Applicant is required to perform site-specific seismic analyses, including SSI analysis which considers seismic wave transmission incoherence and analysis of the CAV of the seismic input motion, in order to determine if high-frequency exceedances of the CSDRS could be transmitted to SSCs in the plant superstructure with potentially damaging effects.*" to "*The COL Applicant is required to perform site-specific seismic analyses, including SSI analysis which may consider seismic wave transmission incoherence and*

Page	Location (e.g., subsection with paragraph/ sentence/ item, table with row/column, or figure)	Description of Change
		analysis of the CAV of the seismic input motion, in order to determine if high-frequency exceedances of the CSDRS could be transmitted to SSCs in the plant superstructure with potentially damaging effects." Reason: Inserted auxiliary verb in COL3.7(22).
1.8-29	Table 1.8-2	RAI-585-4464 Question 09.02.01-33; 09.02.01-55 COL 9.2(2) revised to reflect COL applicant responsibility to ESWS.
1.8-29	Table 1.8-2	RAI-585-4464 Question 09.02.01-38; 09.02.01-39 COL 9.2(6) is revised to reflect COL applicant responsibility to ESWP.
1.8-29	Table 1.8-2	RAI-585-4464 Question 09.02.01-33 COL 9.2(7) is revised to reflect COL applicant responsibility to piping of ESWS.
1.8-31	Table 1.8	RAI-585-4464 Question 09.02.01-49 COL 9.2(25) is revised to reflect COL applicant responsibility to water hammer.
1.8-31	Table 1.8	RAI-585-4464 Question 09.02.01-34 COL 9.2(26) is revised to ensure that no plugging in narrow piping anywhere within the ESWS occurs.
1.8-31	Table 1.8	RAI-585-4464 Question 09.02.01-33 COL 9.2(28) is added since statement from section 9.2.1.2.1 that indicates that COL applicant is to provide piping, valves, etc to site specific UHS was relocated.
1.8-31	Table 1.8	RAI-585-4464 Question 09.02.01-33 COL 9.2(29) is added since section 9.2.1.3 has been changed for COL applicant safety evaluation.
1.8-32	Table 1.8	RAI-585-4464 Question 09.02.01-51; 09.02.01-57; 09.02.01-59 COL 9.2(30) is added since a new COL applicant requirement for periodic inspection, monitoring, maintenance, performance testing and verification of ESWS components has been added.
1.8-32	Table 1.8	RAI-585-4464 Question 09.02.01-36 COL 9.2(31) is added to establish the COL applicant requirement for maintaining discharge portions of ESWS and UHS above saturation pressure.
1.8-32	Table 1.8	RAI-585-4464 Question 09.02.01-49 COL 9.2(32) is added to ensure that system is kept filled by providing a void detection system.
1.8-32	Table 1.8	RAI-585-4464 Question 09.02.01-34 COL 9.2(33) is added to have COL applicant provide design details of strainer backwash line, vent line and their discharge locations.
1.9-5	Table 1.9.1-1(sheet 3 of 15)	RAI 654-4640 Question 04.05.01-12 Subsection 4.5.1 is added in the line item for RG 1.31.

Page	Location (e.g., subsection with paragraph/ sentence/ item, table with row/column, or figure)	Description of Change
1.9-141	Table 1.9.2-7	RAI No.638, Question No. 07.06-19 Added the following description to the second paragraph of the column "Status": "CS/RHR pump hot leg isolation valves open permissive interlock does not have independency and diversity in each train, because the current design of RHR system has sufficiently high reliability against overpressurization or possible radioactive release, and"

Each essential service water pump takes water from the UHS, pumps it through the component cooling water HXs and essential chiller units, and discharges it to the ~~discharge pit~~UHS. In an accident situation, the necessary safety functions can be performed by two of the four trains.

The system configuration for each operating mode is as follows:

- During normal operation, two trains are used to supply service water to two trains of the CCWS. In hot weather, if the outlet temperature of the component cooling water HXs increases to near 100°F, three service water trains are used.
- During plant cooldown by the SGs, a similar configuration is employed.
- During residual heat removal operation, after cooldown by the steam generators, all four CCWS trains and ESWS trains are operated.
- During refueling, the number of essential service water pumps and CCWS trains is determined by the decay heat to be removed.

Component Cooling Water System - The CCWS provides cooling water for the components of the primary systems during normal operation, plant shutdown, and after an accident. It also serves as an intermediate system between the reactor coolant and the ESWS to prevent leakage of radioactive material into the environment.

One subsystem consists of trains A & B, and the other subsystem consists of trains C & D, for a total of four trains. Each train has one CCW pump and one CCW heat exchanger and provides 50% of the cooling capacity required for the CCWS safety function. Electrical power to all trains is supplied by the safety-related buses, which are backed up by Class 1E power supplies. The CCWS provides cooling water for safety-related components such as the CS/RHR HXs, the spent fuel pit HXs, the safeguard pump coolers and other components used during normal operation, such as the CVCS coolers, the radwaste management system coolers, and the RCP coolers. The surge tanks accommodate the thermal expansion and contraction of the cooling water and potential leakage.

The CCWS satisfies the following design requirements:

- The design is based on the service water maximum design temperature (95°F).
- The system is designed to assure that leakage of radioactive fluid from the cooled components is held within the plant.
- The CCWS is designed to provide sufficient cooling capacity not only for the components required during normal plant conditions such as power operation and residual heat removal operation, but also for those components important to the safety in the event of an accident such as the LOCA, or an abnormal operational transient involving the LOOP.

Table 1.8-2 Compilation of All Combined License Applicant Items for Chapters 1-19 (sheet 7 of 44)

COL ITEM NO.	COL ITEM
COL 3.7(6)	*The COL Applicant is to develop site-specific GMRS and FIRS by an analysis methodology, which accounts for the upward propagation of the GMRS. The FIRS are compared to the CSDRS to assure that the US-APWR standard plant seismic design is valid for a particular site. If the FIRS are not enveloped by the CSDRS, the US-APWR standard plant seismic design is modified as part of the COLA in order to validate the US-APWR for installation at that site.*
COL 3.7(7)	*The COL Applicant is to determine the allowable static and dynamic bearing capacities ~~capacity~~ based on site conditions, including the properties of fill concrete placed to provide a level surface for the bottom of foundation elevations, and to evaluate the bearing loads to these capacities~~this capacity~~.*
COL 3.7(8)	*The soil properties may be considered strain-independent for subgrade materials with initial shear wave velocities of 3,500 ft/s or higher, to be confirmed by the COL Applicant as part of the site-specific subsurface material investigations discussed in Section 2.5.4. However, the COL Applicant must institute dynamic testing to evaluate the strain-dependent variation of the material dynamic properties for site materials with initial shear wave velocities below 3,500 ft/s.*
COL 3.7(9)	*The COL Applicant is to assure that the design or location of any site-specific seismic category I SSCs, for example pipe tunnels or duct banks, will not expose those SSCs to possible impact due to the failure or collapse of non-seismic category I structures, or with any other SSCs that could potentially impact, such as heavy haul route loads, transmission towers, non safety-related storage tanks, etc.*
COL 3.7(10)	*It is the responsibility of the COL Applicant to further address structure-to-structure interaction if the specific site conditions can be important for the seismic response of particular US-APWR seismic category I structures, or may result in exceedance of assumed pressure distributions used for the US-APWR standard plant design.*
COL 3.7(11)	*Deleted*
COL 3.7(12)	*It is the responsibility of the COL Applicant to design seismic category I below- or above-ground liquid-retaining metal tanks such that they are enclosed by a tornado missile protecting concrete vault or wall, in order to confine the emergency gas turbine fuel*

Table 1.8-2 Compilation of All Combined License Applicant Items for Chapters 1-19 (sheet 8 of 44)

COL ITEM NO.	COL ITEM
COL 3.7(13)	*The COL Applicant is to set the value of the OBE that serves as the basis for defining the criteria for shutdown of the plant, according to the site specific conditions.*
COL 3.7(14)	*The COL Applicant is to determine from the site-specific geological and seismological conditions if multiple US-APWR units at a site will have essentially the same seismic response, and based on that determination, choose if more than one unit is provided with seismic instrumentation at a multiple-unit site.*
COL 3.7(15)	*Deleted*
COL 3.7(16)	*The COL Applicant shall provide free-field seismic instrumentation in the vicinity of the power block area at surface grade, which shall be used for shutdown determination, unless otherwise justified. Any such justification shall be based on conditions and requirements specific to the site, and shall include justification for evaluation of OBE exceedance using only measurements from instrumentation installed on the buildings and the structures of the US-APWR standard plant.~~The COL Applicant is to verify the site-specific applicability of these monitors, and determine if there is a need for the installation of additional instrumentation for the measurement of the free-field ground motion based on conditions and requirements specific to the site.~~*
COL 3.7(17)	*Deleted*
COL 3.7(18)	*Deleted*
COL 3.7(19)	*The COL Applicant is to identify the implementation milestone for the seismic instrumentation implementation program based on the discussion in Subsections 3.7.4.1 through 3.7.4.5.*
COL 3.7(20)	*The COL Applicant is to validate the site-independent seismic design of the standard plant for site-specific conditions, including geological, seismological, and geophysical characteristics, and to develop the site-specific GMRS as free-field outcrop motions on the uppermost in-situ competent material.*
COL 3.7(21)	*The COL Applicant is responsible for the seismic design of those seismic category I and seismic category II SSCs that are not part of the US-APWR standard plant.*
COL 3.7(22)	*The COL Applicant is required to perform site-specific seismic analyses, including SSI analysis which may consider~~s~~ seismic wave*

Table 1.8-2 Compilation of All Combined License Applicant Items for Chapters 1-19 (sheet 25~~3847~~ of 44)

COL ITEM NO.	COL ITEM
COL 9.2(2)	*The COL Applicant is to provide ~~the~~ protection of the site-specific portions of the ESWS against adverse environmental, operating, and accident conditions that can occur, such as freezing, low temperature operation, and thermal overpressurization. ~~The COL Applicant is to provide the preventive measures for protection against adverse environmental conditions.~~*
COL 9.2(3)	*The COL Applicant is to determine source and location of the UHS.*
COL 9.2(4)	*The COL Applicant is to determine location and design of the ESW intake structure.*
COL 9.2(5)	*The COL Applicant is to determine location and design of the ESW discharge structure.*
COL 9.2(6)	*The COL Applicant is to provide ESWP design details – required total dynamic head with adequate margin, NPSH available, ~~etc~~ and the mode of cooling of the ESWP motor. The COL Applicant is to assure that the sum of the shut-off head of the selected ESW pumps and static head will not result in system pressure that exceeds the ESWS design pressure at any location within the system. The COL Applicant is to evaluate the potential for vortex formation based on the most limiting assumptions that apply.*
COL 9.2(7)	*The COL Applicant is to ~~provide~~address the piping, valves, lining material specifications for piping and fittings as applicable, including those at the boundary between the safety-related and nonsafety-related portions, and other design of the ESWS related to the site specific conditions, including the safety evaluation. The COL Applicant is also to design the pipes entering and exiting the pipe tunnel based on the location of the UHSRS.*
COL 9.2(8)	*The COL Applicant is to specify the following ESW chemistry requirements* • *A chemical injection system to provide non-corrosive, non-scale forming conditions to limit biological film formation.* • *Type of biocide, algaecide, pH adjuster, corrosion inhibitor, scale inhibitor and silt dispersant based on the site conditions.*
COL 9.2(9)	*COL Applicant is to confirm the storage capacity and usage of the potable water.*

Table 1.8-2 Compilation of All Combined License Applicant Items for Chapters 1-19 (sheet 27~~3847~~ of 44)

COL ITEM NO.	COL ITEM
COL 9.2(21)	*The COL Applicant is to determine the source of makeup water to the UHS inventory and the blowdown discharge location based on specific site conditions.*
COL 9.2(22)	*The COL Applicant is to provide results of UHS capability and safety evaluation of the UHS based on specific site conditions and meteorological data. The COL Applicant is to use at least 30 years site specific meteorological data and heat loads data for UHS performance analysis per Regulatory Guide 1.27.*
COL 9.2(23)	*The COL Applicant is to provide test and inspection requirements of the UHS. These ~~is to~~ include inspection and testing requirements necessary to demonstrate that fouling and degradation mechanisms are adequately managed to maintain acceptable UHS performance and integrity.*
COL 9.2(24)	*The COL Applicant is to provide the required alarms, instrumentation and controls details based on the type of UHS to be provided.*
COL 9.2(25)	*The COL applicant is to ~~will~~ develop ~~operating and maintenance procedures~~ system filing, venting, keeping full, and operational procedures to minimize the potential for water hammer; to analyze the system for water hammer impacts; to design the piping system to withstand potential water hammer forces; and to analyze water hammer events ~~for the ESWS to address water hammer issues~~ in accordance with NUREG-0927.*
COL 9.2(26)	*The COL applicant is to specify appropriate sizes of piping and pipe fittings such as restriction orifices to prevent potential plugging due to debris buildup, ~~to~~and develop maintenance and test procedures to monitor debris build up and flush out debris.*
COL 9.2(27)	*The COL Applicant is to develop a milestone schedule for implementation of the operating and maintenance procedures for water hammer prevention.*
COL 9.2(28)	*The COL Applicant is to provide the piping, valves, materials specifications, and other design related to the site-specific UHS.*
COL 9.2(29)	*The COL applicant is to provide the safety evaluation of the capability of the ESWS to: (1) isolate its site-specific, nonsafety-related portions; and (2) provide measures to prevent long-term corrosion and organic fouling that may degrade its performance, per Generic Letter (GL) 89-13.*

Table 1.8-2 Compilation of All Combined License Applicant Items for Chapters 1-19 (sheet 28~~3847~~ of 44)

COL ITEM NO.	COL ITEM
COL 9.2(30)	*The COL Applicant shall conduct periodic inspection, monitoring, maintenance, performance and functional testing of the ESWS and UHS piping and components, including the heat transfer capability of the CCW heat exchangers and essential chiller units, consistent with GL 89-13 and GL.89-13 Supplement 1. The COL Applicant is to develop operating procedures to periodically alternate the operation of the trains to ensure performance of all trains is regularly monitored.*
COL 9.2(31)	*The COL applicant is to verify the system layout of the ESWS and UHS and is to develop operating procedures to assure that the ESWS and UHS are above saturation conditions for all operating modes.*
COL 9.2(32)	*The COL applicant is to provide a void detection system with alarms to detect system voiding.*
COL 9.2(33)	*The COL Applicant is to provide the design details of the strainer blowdown line, vent line, and their discharge locations.*
COL 9.3(1)	*The COL Applicant is to provide the high pressure nitrogen gas, low pressure nitrogen gas, the hydrogen gas, carbon dioxide, and oxygen supply systems.*
COL 9.3(2)	*Deleted*
COL 9.3(3)	*Deleted*
COL 9.3(4)	*Deleted*
COL 9.3(5)	*Deleted*
COL 9.3(6)	*Deleted*
COL 9.3(7)	*Deleted*
COL 9.4(1)	*Deleted*
COL 9.4(2)	*Deleted*
COL 9.4(3)	*Deleted*
COL 9.4(4)	*The COL Applicant is to determine the capacity of cooling and heating coils provided in the air handling units that are affected by site specific conditions.*

Table 1.9.1-1 US-APWR Conformance with Division 1 Regulatory Guides (sheet 3 of 15)

Reg Guide Number	Title	Status	Corresponding Chapter/Section /Subsection
1.29	Seismic Design Classification (Rev. 4, March 2007)	Conformance with no exceptions identified.	3.2.1, 5.2.5, 5.2.2.1, 5.4.11.1, 7.1.3.7, 8.1.5.3, 9.1.1, 9.1.2, 9.3.1
1.30	Quality Assurance Requirements for the Installation, Inspection, and Testing of Instrumentation and Electric Equipment (Rev. 0, August 1972)	Conformance with exceptions. Installation is not included in Design Certification phase.	14.2.7, 17.5
1.31	Control of Ferrite Content in Stainless Steel Weld Metal (Rev. 3, April 1978)	Conformance with no exceptions identified.	4.5.1, 4.5.2, 5.2.3.4.4, 5.3.1.4, 6.1.1
1.32	Criteria for Power Systems for Nuclear Power Plants (Rev. 3, March 2004)	Conformance with no exceptions identified.	8.1.5.3, 16.3
1.33	Quality Assurance Program Requirements (Operation) (Rev. 2, February 1978)	Conformance with exceptions. Implementation of RG applies to a site-specific operational program for which COL Applicant will be responsible.	12.1.3 13.5
1.34	Control of Electroslag Weld Properties (Rev. 0, December 1972)	Not applicable. Electroslag welding is not employed in structural welds of low alloy steel. Electroslag welding is only applied for cladding.	5.2.3.3.2, 5.2.3.4.4, 5.3.1.4
1.35	In-Service Inspection (ISI) of Ungrouted Tendons in Prestressed Concrete Containments (Rev. 3, July 1990)	Conformance with no exceptions identified.	3.8.1.2, 3.8.1.7, 14.2.7
1.35.1	Determining Prestressing Forces for Inspection of Prestressed Concrete Containments (Rev. 0, July 1990)	Conformance with no exceptions identified.	3.8.1.2, 3.8.1.7, 14.2.7
1.36	Nonmetallic Thermal Insulation for Austenitic Stainless Steel (Rev. 0, February 1973)	Conformance with no exceptions identified.	5.2.3.2, 6.1.1.2
1.37	Quality Assurance Requirements for Cleaning of Fluid Systems and Associated Components of Water-Cooled Nuclear Power Plants (Rev. 1, March 2007)	Conformance with exception. Programmatic/operational aspect is not applicable to US-APWR design certification.	3.13.1, 4.5.1, 5.2.3, 5.3.1, 6.1.1, 14.2.7
1.38	Quality Assurance Requirements for Packaging, Shipping, Receiving, Storage, and Handling of Items for Water-Cooled Nuclear Power Plants (Rev. 2, May 1977)	Not applicable. RG applies to a site-specific operational program.	N/A
1.39	Housekeeping Requirements for Water-Cooled Nuclear Power Plants (Rev. 2, September 1977)	Not applicable. RG applies to a site-specific operational program.	N/A

Table 1.9.2-7 US-APWR Conformance with Standard Review Plan Chapter 7 Instrumentation and Controls (sheet 8~~8~~ of 19)

SRP Section and Title	SRP Excerpt Indicating Acceptance Criteria for DCD	Status	Appears in DCD Chapter/Section
Branch Technical Position 7-1: Guidance on Isolation of Low-Pressure Systems From the High-Pressure Reactor Coolant System	The following measures should be incorporated in designs of the interfaces between low-pressure systems and the high pressure reactor coolant system: 1. At least two valves in series should be provided to isolate any subsystem whenever the primary system pressure is above the pressure rating of the subsystem. 2. For system interfaces where both valves are motor-operated, the valves should have independent and diverse interlocks to prevent both from opening unless the primary system pressure is below the subsystem design pressure. Also, the valve operators should receive a signal to close automatically whenever the primary system pressure exceeds the subsystem design pressure. 3. For those system interfaces where one check valve and one motor-operated valve are provided, the motor-operated valve should be interlocked to prevent the valve from opening whenever the primary pressure is above the subsystem design pressure, and to close automatically whenever the primary system pressure exceeds the subsystem design pressure. 4. Suitable valve position indication should be provided in the control room for the interface valves. 5. For those interfaces where the subsystem is required for emergency core cooling system operation, the above recommendations need not be implemented. System interfaces of this type should be evaluated on an individual basis, as discussed in GL 87-12 and GL 88-17.	Conformance with exceptions. Criteria 1 and 4-6: Conformance with no exceptions identified. Criterion 2: Conformance with exception (The CS/RHR pump hot leg isolation valves are interlocked so that they cannot be opened when the RCS pressure is above 400 psig. In US-APWR, CS/RHR pump suction relief valves provide the low-temperature over-pressure protection for RCS components. Therefore CS/RHR pump hot leg isolation valves open permissive interlock does not have independence and diversity in each train, because the current design of RHR system has sufficiently high reliability against overpressurization or possible radioactive release, and there is no interlock which automatically isolates RHRS from RCS when reactor coolant pressure exceeds the RHR design pressure to ensure performance of the low-temperature over-pressure protection function according to BTP 5-2.) Criterion 3: Not applicable to the US-APWR design certification (There are no such lines except for ECCS in the US-APWR.)	7.6.1

Chapter 2

US-APWR DCD Chapter 2 Rev. 2, Tracking Report Rev. 6 Change List

Page	Location (e.g., subsection with paragraph/ sentence/ item, table with row/column, or figure)	Description of Change
2-vi	Acronyms and Abbreviations	Add: "DCD Design Control Document" to the list of Acronyms and Abbreviations. Reason: Editorial correction.
2.0-9	Table 2.0-1 Note 12 Last Sentence	Change: "… indicated in DCD Section 3.8." to "… indicated in Design Control Document (DCD) Section 3.8." Reason: Editorial change to define acronym the first time used in Chapter 2.

ACRONYMS AND ABBREVIATIONS

A/B	auxiliary building
CFR	Code of Federal Regulations
COL	Combined License
COLA	Combined License Application
CSDRS	certified seismic design response spectra
DBE	design basis event
DCD	Design Control Document
EAB	exclusion area boundary
FSAR	Final Safety Analysis Report
GMRS	ground motion response spectrum
HVAC	heating, ventilation, and air conditioning
LOCA	loss-of-coolant accident
LPZ	low-population zone
MCR	main control room
NUREG	NRC Nuclear Regulatory Commission
PGA	peak ground acceleration
PMF	probable maximum flood
PMP	probable maximum precipitation
PMWP	probable maximum winter precipitation
R/B	reactor building
RG	Regulatory Guide
SRP	Standard Review Plan
SSE	safe-shutdown earthquake
T/B	turbine building
TS	technical specification
TSC	technical support center
UHS	ultimate heat sink
US	United States

Table 2.0-1 Key Site Parameters (Sheet 8 of 8)

Total settlement of R/B complex foundation(14)	6.0 in.
Differential settlement across R/B complex foundation(14)	2.0 in.
Maximum differential settlement between buildings(14)	0.5 in.
Maximum tilt of R/B complex foundation generated during operational life of the plant(14)	1/2000

NOTES:

1. The specified missiles are assumed to have a vertical speed component equal to 2/3 of the horizontal speed.
2. These dispersion factors are chosen as the maximum values at all intake points.
3. These dispersion factors are chosen as the maximum values at all inleak points.
4. These dispersion factors are used for a loss-of-coolant accident (LOCA) and a rod ejection accident.
5. These dispersion factors are used for a LOCA, a rod ejection accident, a failure of small lines carrying primary coolant outside containment and a fuel-handling accident inside the containment.
6. These dispersion factors are used for a steam generator tube rupture, a steam system piping failure, a reactor coolant pump rotor seizure and a rod ejection accident.
7. These dispersion factors are used for a fuel handling accident occurring in the fuel storage and handling area.
8. These dispersion factors are used for a steam system piping failure.
9. These dispersion factors are used for a LOCA.
10. These dispersion factors are used for a rod ejection accident, a failure of small lines carrying primary coolant outside containment and a fuel-handling accident inside the containment.
11. Normal winter precipitation roof load is determined by converting ground snow load p_g in accordance with ASCE 7-05. The ground snow load p_g is based on the highest ground-level weight of:
    - the 100-year return period snowpack,
    - the historical maximum snowpack,
    - the 100-year return period snowfall event, or
    - the historical maximum snowfall event in the site region.
12. The extreme winter precipitation roof load is based on the sum of the normal ground level winter precipitation plus the highest weight at ground level resulting from either the extreme frozen winter precipitation event or the extreme liquid winter precipitation event. The extreme frozen winter precipitation event is assumed to accumulate on the roof on top of the antecedent normal winter precipitation event. The extreme liquid winter precipitation event may not accumulate on the roof, depending on the geometry of the roof and the type of drainage provided. The extreme winter precipitation roof load is included as live load in extreme loading combinations using the applicable load factor indicated in Design Control Document (DCD) Section 3.8.
13. The 48-hour PMWP is based on interpolation of 24-hour PMP and 72-hour PMP data for the month of March in HMR-53 (Reference: Hydrometeorological Report No. 53, Seasonal Variation of 10-Square-Mile Probable Maximum Precipitation Estimates, United States East of the 105th Meridian, Figures 27 and 37)
14. Acceptable parameters for settlement without further evaluation.

Chapter 3

Page	Location (e.g., subsection with paragraph/ sentence/ item, table with row/column, or figure)	Description of Change
3-xv	Appendices Appendix 3H	Change: "Model Properties and Seismic Analysis Results for Lump Mass Stick Models of R/B-PCCV-Containment Internal Structure on a Common Basemat, PS/Bs on Individual Basemats" to "Model Properties and Seismic Analysis Results for Lump Mass Stick Models of R/B-PCCV-Containment Internal Structure on a Common Basemat" Reason: PS/Bs no long analyzed using lumped mass stick model [RAI 212-1950 Question 3.7.2-18]
3-xvi	Tables Table 3.7.1-5	Change: "Duration of Motion of US-APWR Artificial Time Histories with Respect to Arias Intensity" to "Duration of Motion of US-APWR Time Histories with Respect to Arias Intensity" Reason: Updated analysis methodology
3-xvi	Tables Table 3.7.1-5	Add Table 3.7.1-6 "Generic Soil Profile Categories" Reason: Updated analysis methodology
3-xix	Figures Figure 3.7.1-3	Change: "Artificial Time Histories Plots (H1)" to "Acceleration, Velocity, and Displacement Time History for Component H1" Reason: Updated analysis methodology
3-xix	Figures Figure 3.7.1-4	Change: "Artificial Time Histories Plots (H1)" to "Acceleration, Velocity, and Displacement Time History for Component H1" Reason: Updated analysis methodology
3-xix	Figures Figure 3.7.1-5	Change: "Artificial Time Histories Plots (V)" to "Acceleration, Velocity, and Displacement Time History for Component V" Reason: Updated analysis methodology
3-xix	Figures Figure 3.7.1-6	Change: "Artificial Time History Response Spectra (H1)" to "5% Damped Time History Response Spectra (H1)" Reason: Updated analysis methodology
3-xix	Figures Figure 3.7.1-7	Change: "Artificial Time History Response Spectra (H2)" to "5% Damped Time History Response Spectra (H2)" Reason: Updated analysis methodology

Page	Location (e.g., subsection with paragraph/ sentence/ item, table with row/column, or figure)	Description of Change
3-xix	Figures Figure 3.7.1-8	Change: "Artificial Time History Response Spectra (V)" to "5% Damped Time History Response Spectra (V)" Reason: Updated analysis methodology
3.1-4	Subsection 3.1.1.5.1 1st Paragraph 1st Sentence	Changed: "design control document (DCD)" to "Design Control Document (DCD)" Reason: Editorial change to correct title case.
3.2-5	Subsection 3.2.1.3 1st Paragraph 3rd Sentence	Add as 4th Sentence: "The turbine building (T/B) is part of the standard design but outside the nuclear Island." Reason: [RAI 585-4464, Question 09.02.01-32
3.2-23	Table 3.2-2 Sheet 7 2nd Row 1st Column	Change: "…(excluding the valves) RHS-AOV-024A,D Containment isolation valve (excluding the valve) CVS-AOV-005…" to "…(excluding the valves) RHS-AOV-024B,C Containment isolation valve (excluding the valve) CVS-AOV-005…" Reason: Editorial correction
3.2-34	Table 3.2-2 Sheet 18 5th Row 1st Column	Change: "…up to and including EFS-VLV-109A,B" to "…up to and including EFS-VLV-109A,D" Reason: Editorial correction
3.2-48	Table 3.2-2 Sheet 32 2nd Row, 1st Column	Change: "Essential service water pump outlet strainers, including essential service water supply piping and valves" to "Essential service water pump discharge strainers, including essential service water supply piping and valves" Reason: Table has been revised to remove the deleted CCW heat exchanger inlet strainer line and ESWP motor cooling line and strainer backwash and vent line piping and valves are added to the table. [RAI 585-4464, Question 09.02.01-32
3.2-48	Table 3.2-2 Sheet 32	Change: "Component cooling water heat exchanger inlet strainers, including essential service water supply piping and valves" to "Essential service water system

Page	Location (e.g., subsection with paragraph/ sentence/ item, table with row/column, or figure)	Description of Change
	3rd Row, 1st Column	strainer blowdown piping and valves and vent piping and valves" Reason: Table has been revised to remove the deleted CCW heat exchanger inlet strainer line and ESWP motor cooling line and strainer backwash and vent line piping and valves are added to the table. [RAI 585-4464, Question 09.02.01-32
3.2-57	Table 3.2-2 Sheet 41 Item 28 1st Row	Changed Equipment Class from "4" to "5". Change Location from "R/B" to "PCCV" Changed Quality Group from "D" to "N/A". Reason: Due to design progress.
3.2-57	Table 3.2-2 Sheet 41 Item 28 2nd, 15th-17th Rows	Changed Equipment Class from "4" to "5". Changed Quality Group from "D" to "N/A". Reason: Due to design progress.
3.2-57	Table 3.2-2 Sheet 41 Item 28 6th Row	Change Location from "R/B" to "PCCV, R/B" Reason: Due to design progress.
3.2-57	Table 3.2-2 Sheet 41 Item 28 14th Row	Changed Equipment Class from "4" to "5". Change Location from "R/B" to "PCCV, R/B" Changed Quality Group from "D" to "N/A". Reason: Due to design progress.
3.2-58	Table 3.2-2 Sheet 42 Item 30 1st and 2nd Rows	Changed Equipment Class from "4" to "5". Changed Quality Group from "D" to "N/A". Changed Notes from "These single-failure-proof cranes are designed in accordance with NUREG-0554 to maintain their position and hold their loads during an SSE." To "The main and auxiliary hoist of the polar crane, the main hoist of the spent fuel cask handling crane and the equipment hatch hoist are designed in accordance with ASME NOG-1 and NUREG-0554 as Type I single-failure-proof cranes." Reason: Changes due to design progress, and provided

Page	Location (e.g., subsection with paragraph/ sentence/ item, table with row/column, or figure)	Description of Change
		clarification [RAI 616-4865, Question 09.01.05-18 and 09.01.05-19
3.2-58	Table 3.2-2 Sheet 42 Item 30 3rd Row	Changed first column from "(Deleted)" to "Equipment hatch hoist", and added the following information within the corresponding columns of this row. Equipment Class: "5" Location: "PCCV" Quality Group: "N/A" 10CFR50 App B Ref.: "N/A' Codes and Standards: "5" Seismic Category: "2" Note: "The main and auxiliary hoist of the polar crane, the main hoist of the spent fuel cask handling crane and the equipment hatch hoist are designed in accordance with ASME NOG-1 and NUREG-0554 as Type I single-failure-proof cranes." Reason: Provided clarification [RAI 616-4865, Question 09.01.05-18]
3.2-58	Table 3.2-2 Sheet 42 Item 30 4th Row	Changed Equipment Class from "4 or 10" to "5 or 10". Changed Quality Group from "D or N/A" to "N/A". Reason: Due to design progress.
3.2-58	Table 3.2-2 Sheet 42 Item 30 6th Row	Changed Equipment Class from "6" to "5". Changed Seismic Category from "Note 1" to "NS". Reason: Due to design progress.
3.2-70	Table 3.2-2 Sheet 54 Last Column	Add in Notes column: "Piping and valves within areas containing safety-related equipment are designed as seismic Category II." Reason: Provided clarification [RAI 584-4468, Question 09.02.02-70]
3.2-71	Table 3.2-2 Sheet 55	Change: "Valves VWS-MOV-425,426" to "Valves VWS-MOV-424,425" Reason: Editorial correction [RAI 584-4468, Question

Page	Location (e.g., subsection with paragraph/ sentence/ item, table with row/column, or figure)	Description of Change
	2nd Row 1st Column	09.02.02-70]
3.2-75	Table 3.2-4 7th Row 1st Column and Notes	Change: "Essential Service Water Pipe Tunnel (ESWPT) (from/to UHS)" to "Essential Service Water Pipe Tunnel (ESWPT) (from/to UHS)[5]" Add new note: "5. The ESWPT is a site-specific structure, but the existence and functions are required by the plant standard design. The specific features of the ESWPT are site dependent and will depend on the type of UHS." Reason: Clarifies that the features of the ESWPT are site-specific, are dependent on type of UHS, but existence and functions are required by the plant standard design. [RAI 585-4464, Question 09.02.01-32]
3.3-7	Subsection 3.3.2.3 3rd Paragraph 4th - last Sentence	Change: "This ensures that there is no overall failure of the T/B, due to tornado wind and/or atmospheric pressure change, which could affect the ability of adjacent buildings and structures to perform their intended safety functions. Localized failures of wind girts and other exposed SSCs are permitted. However, these items are designed to remain attached to the structure. Alternately, if such items could become dislodged, they are reviewed to ensure that no new missiles are generated that are not enveloped by the missiles addressed in Subsection 3.5.1.4." to "This ensures that there is no overall failure of the T/B, due to maximum tornado wind and/or atmospheric pressure change as defined in Table 2.0-1, which could affect the ability of adjacent buildings and structures to perform their intended safety functions. Localized failures of wind girts and other exposed SSCs are permitted. However, these items are designed to remain attached to the structure. Any items (including the T/B siding) which might become dislodged and become missiles under the maximum tornado conditions do not warrant further evaluation because they are considered to be enveloped by the missiles addressed in Subsection 3.5.1.4. The use of the tornado-generated missile spectrum described in Subsection 3.5.1.4, which is consistent with the most severe missile spectrum as identified for Region I in RG 1.76, Revision 1, provides assurance that the necessary SSCs will be available to

Page	Location (e.g., subsection with paragraph/ sentence/ item, table with row/column, or figure)	Description of Change
		mitigate the potential effects of a tornado on plant safety." Reason: To clarify that any localized failures of site-specific structures will not create any tornado-generated missiles that are not enveloped by the missiles addressed in Subsection 3.5.1.4. [UAP-HF-10080, 4/2/2010]
3.3-7	Subsection 3.3.2.3 4th Paragraph 1st Sentence	Change: "The AC/B is not designed for a tornado and consequently it could potentially fail due to design basis tornado loading, including loss of its siding." to "The AC/B is not designed for a tornado and consequently it could potentially fail due to design basis tornado loading." Reason: The AC/B is a reinforced concrete structure that does not contain metal siding. [UAP-HF-10080, 4/2/2010]
3.5-11	Subsection 3.5.1.4 2nd Paragraph 3rd Bullet	Change: "A 1 inch diameter solid steel sphere assumed to impinge upon barrier openings in the most damaging direction with a velocity of 26 ft/s in any direction." to "A 1 inch diameter solid steel sphere assumed to impinge upon barrier openings in the most damaging direction with a horizontal velocity of 26 ft/s or a vertical velocity of 17.4 ft/s." Reason: Editorial correction to align with Tier 1 Table 2.1-1 Note 1, Tier 2 Table 2.0-2 Note 1, and RG 1.76.
3.7-3	Subsection 3.7.1.1 **CSRDS** 3rd Paragraph Last Sentence	Change: "The COL Applicant is required to perform site-specific seismic analyses, including SSI analysis which considers seismic wave transmission incoherence and analysis of the CAV of the seismic input motion, in order to determine if high-frequency exceedances of the CSDRS could be transmitted to SSCs in the plant superstructure with potentially damaging effects." to "The COL Applicant is required to perform site-specific seismic analyses, including SSI analysis which may consider seismic wave transmission incoherence and analysis of the CAV of the seismic input motion, in order to determine if high-frequency exceedances of the CSDRS could be transmitted to SSCs in the plant superstructure with potentially damaging effects."

Page	Location (e.g., subsection with paragraph/ sentence/ item, table with row/column, or figure)	Description of Change
		Reason: Inserted auxiliary verb in COL3.7(22).
3.7-6	**Design Ground Motion Time History** 1st Paragraph 1st Sentence	Change: "One set of three statistically independent time histories of seismic motion is synthesized artificially for use as the input motion …" to "As described in Technical Report MUAP-10001 (Reference 3.7-47), one set of three statistically independent time histories of seismic motion is synthesized from seed recorded earthquake ground motions for use as the input motion ..." Reason: Provide reference to location of information
3.7-6	**Design Ground Motion Time History** 4th Paragraph 1st Sentence	Change: "The artificial time histories plots for the ground accelerations, velocity, and displacements ..." to "The time histories plots for the ground accelerations, velocity, and displacements ..." Reason: Remove "artificial" as basis for time histories plots
3.7-6	**Design Ground Motion Time History** 5th Paragraph 2nd & 3rd Sentences	Change: "… are also included in the figure to demonstrate that the ARS of the synthesized artificial time histories envelope those of the CSDRS for 5% damping values. The figures demonstrate that the artificial acceleration time histories ..." to "… are also included in the figures to demonstrate that the ARS of the synthesized time histories envelope those of the CSDRS for 5% damping values. The figures demonstrate that the synthesized acceleration time histories ..." Reason: Correct grammatical error and remove "artificial" as basis for time histories plots
3.7-6	**Design Ground Motion Time History** 6th Paragraph Step (a)	Replace in its entirety with the following: "The US-APWR time histories have sufficiently small time increments (Δt =0.005 seconds) and a total duration of 22.005 seconds. The time history data records have a Nyquist frequency of $N_f = 1/(2\Delta t)$ =100 Hz, and meet the NUREG-0800 SRP 3.7.1 requirement of a total duration of at least 20 seconds. The time increment of 0.005 seconds is lower than the maximum time increment of 0.01 seconds permitted by SRP 3.7.1. The Nyquist frequency of 100 Hz is considered to be above the range of frequencies important for the design of the US-APWR plant and assures that the seismic analysis capture the responses of SSCs in the high frequency range. This is particularly important for site-

Page	Location (e.g., subsection with paragraph/ sentence/ item, table with row/column, or figure)	Description of Change
		specific subgrade conditions where seismic category I structures are founded on a hard rock subgrade." Reason: Provide the process for development of non-artificial time histories
3.7-7	**Design Ground Motion Time History** 6th Paragraph Step (b)	Replace in its entirety with the following: "The 5% damped ARS of the US-APWR time history components, shown in Figures 3.7.1-6, 3.7.1-7, and 3.7.1-8, are computed at 300 frequency points that are divided such that 100 frequency points are uniformly spaced over the log frequency scale from 0.1 Hz to 1 Hz, 1 Hz to 10 Hz, and 10 Hz to 100 Hz. Each ARS obtained from the three artificial ground motion time history components is compared with the target response spectra at each frequency computed in the frequency range from 0.1 Hz to 100 Hz." Reason: Provide the process for development of non-artificial time histories
3.7-7	**Design Ground Motion Time History** 6th Paragraph Step (c)	Replace in its entirety with the following: "The 5% damped ARS computed for each of the three US-APWR time history components do not fall more than 10% below the corresponding CSDRS target response spectra at any particular frequency. In addition, within a frequency window no larger than ±10% centered at any frequency data point, none of the three ARS (H1, H2, and V) falls below its corresponding target CSDRS. Meeting the requirements of SRP 3.7.1 is confirmed by assuring that, for each of the spectra derived from the time history components, no more than nine adjacent frequency points fall below the CSDRS target response spectra for frequencies between 0.1 Hz and 100 Hz. This ensures that the response spectra resulting from the time history components do not fall below the corresponding target response spectra in large frequency windows. Table 3.7.1-4R demonstrates that these requirements are met by showing a summary of the frequency non-exceedances." Reason: Provide the process for development of non-artificial time histories
3.7-8	**Design Ground Motion Time History**	Change: "In lieu of the power spectral density requirement of Approach 1 in NUREG-0800, SRP 3.7.1 (Reference 3.7-10), Approach 2 specifies that the computed 5% damped response spectra of each

Page	Location (e.g., subsection with paragraph/ sentence/ item, table with row/column, or figure)	Description of Change
	6th Paragraph Step (d) 1st & 2nd Sentences	artificial ground motion time history does not exceed its target response spectra at any frequency by more than 30% (a factor of 1.3) in the frequency range of interest. For the US-APWR, the response spectra derived from the artificial time histories are checked to assure that they do not exceed the corresponding target spectra (CSDRS) by more than 30% at any frequency range measured as described in item (b) above." To "In lieu of the power spectral density requirement of Option 1 Approach 1 in NUREG-0800, SRP 3.7.1 (Reference 3.7-10), Approach 2 specifies that the computed 5% damped response spectra of each artificial ground motion time history component does not exceed its target response spectra at any frequency by more than 30% (a factor of 1.3) in the frequency range of interest. For the US-APWR, the response spectra derived from the time histories are checked to ensure that they do not exceed the corresponding target spectra (CSDRS) by more than 30% at any frequency range measured as described in item (b) above." Reason: Provide the process for development of non-artificial time histories
3.7-9	**Design Ground Motion Time History** 7th Paragraph 1st Sentence	Change: "The cross-correlation coefficients between the three components of the design time histories are as follows: ρ_{12} = -0.0729, ρ_{23} = -0.0614, and ρ_{31} = -0.1289" to "The cross-correlation coefficients between the three components of the design time histories are as follows: ρ_{12} = -0.0892, ρ_{23} = -0.0654, and ρ_{31} = -0.0836" Reason: Updated analysis data
3.7-9	**Design Ground Motion Time History** 8th Paragraph 1st Sentence	Change: "Since the absolute values of the cross-correlation coefficients of the US-APWR artificial time histories are less than 0.16, …" to "Since the absolute values of the cross-correlation coefficients of the US-APWR time histories are less than 0.16, …" Reason: Remove "artificial" as basis for time histories plots
3.7-9	**Duration of Motion** 1st Paragraph 1st Sentence	Change: "Each time history of the set of three statistically independent time histories which are developed for design of the US-APWR seismic category I buildings has a strong duration of motion of 8.91 seconds and a total duration of motion of 22.09 seconds." to "Each time history of the set of three statistically independent time histories which are

Page	Location (e.g., subsection with paragraph/ sentence/ item, table with row/column, or figure)	Description of Change
		developed for design of the US-APWR seismic category I buildings has a strong duration of motion greater than 7 seconds, and a total duration of motion greater than 22 seconds." Reason: Updated analysis data
3.7-9	**Duration of Motion** 2nd Paragraph 1st Sentence	Change: "For the linear structural analyses, which are based on the synthesized time histories and used to design US-APWR seismic category I buildings and structures, ..." to "For the linear structural analyses, which are based on synthesized time histories presented in Technical Report MUAP-10001 (Reference 3.7-47) that are used to design US-APWR standard plant seismic category I buildings and structures, ..." Reason: Provide reference to location of information
3.7-10	Subsection 3.7.1.2 4th Paragraph 1st Sentence	Change: "The damping values for systems …" to "Generally, the damping values for systems …" Reason: Updated analysis methodology
3.7-11	Subsection 3.7.1.2 Last Paragraph 1st Sentence	Replace in its entirety with the following: "The frequency domain SSI analyses of the R/B complex and the PS/Bs, discussed in Section 3.7.2.4, use complex damping formulation to represent the dissipation of energy in the combined dynamic system due to material damping. The global stiffness and damping of the dynamic system are represented by a global complex matrix that is assembled from the element complex matrices modeling the stiffness and material damping of different subsystems and/or structural components." Reason: Updated analysis methodology
3.7-11	Subsection 3.7.1.3 2nd Paragraph 3rd Sentence	Change: "The COL Applicant is to determine the allowable dynamic bearing capacity based on site conditions, and to evaluate the bearing load to this capacity." to "The COL Applicant is to determine the allowable static and dynamic bearing capacities based on site conditions, including the properties of fill concrete placed to provide a level surface for the bottom of foundation elevations, and to evaluate the bearing loads to these capacities." Reason: Revised COL 3.7(7) to clarify that the properties of fill concrete used as a supporting medium

Page	Location (e.g., subsection with paragraph/ sentence/ item, table with row/column, or figure)	Description of Change
		are also discussed in DCD Subsection 3.7.1.3. [RAI 496-3735 Question 03.08.05-35 and RAI 643-4967, Question 03.07.01-12]
3.7-11	Subsection 3.7.1.3 2nd Paragraph Last Sentence	Add as last sentence: "A minimum factor of safety of 2.5 is suggested for the ultimate bearing capacity versus the allowable static bearing capacity; however, a different value may be justified based on site-specific geotechnical conditions." Reason: Provided clarification [RAI 643-4967, Question 03.07.01-12]
3.7-11	Subsection 3.7.1.3 3rd Paragraph	Replace in its entirety with the following: "The range of soil parameters in the site-independent seismic design includes use of basemat supporting media that are comprised of generic layered soil profiles. The profiles have been selected from an exhaustive suite of soil profiles that cover the entire range of generic site conditions from soft soil to firm rock that may exist across the central and eastern North America. The initial profile development recognized that for the softer conditions, the shallow materials would be either removed or improved for appropriate foundation conditions. From the exhaustive suite of candidate sites, a final subset of eight generic profiles representing strata consisting of soil and soft, medium, and hard rock was selected. The profiles are presented in Table 3.7-203. The generic profiles are classified using $\overline{V_S}$ (30m), the average shear-wave velocity in the top 30 meters. This classification is consistent with current practice for building codes and is a convenient metric with which to distinguish the profiles, prior to soil removal or improvement for installation of the power block. Strain-compatible properties consistent with the CSDRS input ground motion, including shear- and compression-wave velocities, corresponding hysteretic damping values, and Poisson ratios are developed for the profiles. Note that for purposes of development of compression-wave velocities, the profiles are analyzed in the saturated condition. The resulting generic layered supporting media provide a wide variation of properties to address potential ranges in dynamic soil properties. The development of

Page	Location (e.g., subsection with paragraph/ sentence/ item, table with row/column, or figure)	Description of Change
		the supporting soil media profiles are described further in Sections 4.2 and 5.2 of Technical Report MUAP-10001 (Reference 3.7-47)." Reason: Updated analysis methodology
3.7-12	Subsection 3.7.1.3 Last Paragraph	Replace in its entirety with the following: "The site-independent SSI analyses include the subgrade as horizontally infinite layers resting on the surface of an elasto-viscous half-space, representing the stiffness, material, and radiation damping of geological hard rock stratum with shear wave velocity equal or greater than 9,200 ft/s. The soil material damping values used in conjunction with the shear and compression wave profiles in the SSI analysis models are identical. The seismic models used in the SSI analyses are discussed further in Section 3.7.2.3. The site-independent SSI analyses are discussed further in Section 3.7.2.4, as well as the suggested methodologies for analyzing the effect of site-specific conditions on the SSI response." Reason: Updated analysis methodology
3.7-13	Subsection 3.7.2 2nd Paragraph 1st Sentence	Change: "The seismic response of the major seismic category I and seismic category II structures is obtained from time history analysis of lumped mass stick models with frequency independent lumped parameters constants representing the stiffness and damping properties of the SSI." to "The seismic responses of the major seismic category I and seismic category II structures are required to be obtained from frequency domain time history analysis of seismic models considering a frequency-dependent SSI system, including a set of eight generic layered soil profiles representing a wide range of site conditions." Reason: Updated analysis methodology
3.7-13 thru -15	Subsection 3.7.2 3rd Paragraph	Replace in its entirety with the following: "The overall process for development of seismic loading is summarized for the R/B complex as follows: 1. Develop shear forces, axial force, bending moments and torsional moment diagrams from the results of SSI analyses of each generic soil profile for maximum member forces and moments in the stick elements.

Page	Location (e.g., subsection with paragraph/ sentence/ item, table with row/column, or figure)	Description of Change
		2. Develop equivalent horizontal loads F_{Hi} in NS and EW direction from the shear force diagrams for each floor elevation. 3. Develop equivalent vertical loads F_{Vi} from the axial force diagram for each floor elevation. 4. Develop equivalent floor rocking moment M_{Ri} in NS and EW direction from the bending moments diagrams for each floor elevation. 5. Develop equivalent floor torsional moment M_{Ti} from the torsional moments diagrams for each floor elevation. 6. Use the SRSS method to combine the seismic demands that are due to three components of the earthquake. 7. Envelope the SRSS seismic demands from the SSI analyses of the eight generic soil profiles. 8. Adjust the magnitude of the vertical load FV to include the effect of the floor rocking using the following equation: $F'_V = [(F_v)^2 + (M_{NS}/L_{NS})^2 + (M_{EW}/L_{EW})^2]^{1/2}$ where M_{NS} and M_{EW} are the floor rocking moments in NS and EW direction and the L_{NS} and L_{EW} are the NS and EW length of the floor. Note that this increase is applied to the vertical design SSE loads for the detailed finite element model in calculating demands on structural members. 9. Adjust the magnitude of the horizontal floor loads F_H to include the effect of the floor torsional response M_T as shown in the equations below. $F'_{NS} = F_{NS} + \frac{M_T}{L_{EW}} \qquad F'_{EW} = F_{EW} + \frac{M_T}{L_{NS}}$ The design also includes the accidental torsion discussed in Subsection 3.7.2.11.

Page	Location (e.g., subsection with paragraph/ sentence/ item, table with row/column, or figure)	Description of Change
		10. Conservative story seismic loads are selected based on F'_V, F'_{NS}, and F'_{EW}. 11. Determine the out-of-plane seismic loads on flexible slabs and walls based on results for maximum accelerations of single degree of freedom oscillators. The overall process for development of seismic loading is summarized for the PS/Bs as follows: The results obtained from the site-independent SSI analyses for maximum nodal accelerations serve as basis for development of the seismic loads used for the standard design of PS/B structural members. These seismic design loads are developed in the form of equivalent static accelerations as follows: 1. Calculate maximum accelerations in each of the 3 response directions due to each of the 3 direction input motions from the site-independent SSI analyses of PS/B. 2. Envelope the maximum nodal accelerations results obtained from the site-independent SSI analyses of eight generic site conditions. 3. Create nine (9) plots of the envelope maximum accelerations in three directions representing the response of the PS/B at particular floor elevation due to the three components of the earthquake. 4. Apply the SRSS rule to combine the enveloped nodal maximum accelerations due to the three directions of the earthquake and plot the SRSS of the maximum acceleration responses in the three directions. 5. Calculate weighted average accelerations at floor elevation "f" as follows: $$A_i^f = \frac{\sum a_i^k \cdot w_k}{W_f}$$ where W_f is the total weight of the floor "f", W_k is the weight participating to node "k", A_i^f is the

Page	Location (e.g., subsection with paragraph/ sentence/ item, table with row/column, or figure)	Description of Change
		weighted average acceleration of floor "f" in "i" direction, and a_i^k is the maximum SRSS acceleration at node "k" in "i" direction. 6. Determine equivalent seismic demand at each floor elevation based on the maximum acceleration plots and the weighted average accelerations obtained from items 3, 4 and 5. The design also includes the accidental torsion discussed in Subsection 3.7.2.11. 7. Determine the out of plane seismic demands on slabs and walls with large unsupported areas based on the plots of the maximum acceleration plots obtained in step 4. Calculate story shear diagram for the PS/B structure. The total shear at each floor elevation is obtained as the sum of the all nodal inertial forces at and above that elevation. The nodal inertial forces are the product of the nodal mass and the equivalent static acceleration acting on the node." Reason: Updated analysis methodology
3.7-16	Subsection 3.7.2.1 2nd through 9th Paragraphs	Replace in its entirety with the following: "The seismic response of standard plant seismic category I and II structures is obtained from site-independent analyses performed using three-dimensional SSI models with the program ACS SASSI (Reference 3.7-17R) which utilizes time history analysis in the frequency domain with the sub-structuring technique and complex stiffness representation of stiffness and damping properties of the structures and subgrade. The global complex stiffness matrix of the structure is assembled from the stiffness matrices of the finite elements. With the sub-structuring technique, impedance, load vector, and complex dynamic stiffness matrices are developed separately for the structure and the soil. The input ground motion is transformed into the frequency domain using Fast Fourier Transformation. The equations of motion for the complex SSI system are then developed by combining the equations of motion for the structure with those of the soil in the frequency domain. The seismic response is obtained in the frequency domain from solution of complex algebraic equations for a selected set of frequencies of analysis. The solutions obtained for the selected set of

Page	Location (e.g., subsection with paragraph/ sentence/ item, table with row/column, or figure)	Description of Change
		frequencies of analysis are then interpolated and transformed into the time domain using Inverse Fast Fourier Transformation. The entire process is described in Section 2 of the user's guide for ACS SASSI (Reference 3.7-17R)." Reason: Updated analysis methodology
3.7-19	Subsection 3.7.2.1 Third from Last Paragraph 1st Sentence	Change: "The above-described method utilizing direct integration for time history analysis is used for the analysis of the R/B-PCCV-containment internal structure on their common basemat." to "As described above, the ACS SASSI program (Reference 3.7-17) analysis method requires solution in the frequency domain of the coupled equations of motion that represent the SSI system." Reason: Updated analysis methodology
3.7-20	Subsection 3.7.2.2 1st Paragraph	Replace in its entirety with the following: "The seismic analysis of the R/B, PCCV, and containment internal structure and their common basemat is based on a seismic model consisting of three lumped mass stick models (for each of the three structures) that are all integrated with a three-dimensional finite element model of the R/B basement. The lumped mass stick model of the containment internal structure is coupled with lumped mass stick models representing the dynamic properties of the reactor vessel, reactor coolant loop, and other major equipment and piping. The dynamic model is discussed further below in Subsection 3.7.2.3 and in Technical Report MUAP-10001 (Reference 3.7-47). The lumped mass stick models of R/B, PCCV, and containment internal structure are coupled with a detailed RCL lumped mass stick model." Reason: Updated analysis methodology
3.7-20	Subsection 3.7.2.2 2nd Paragraph	Replace in its entirety with the following: "The seismic model analyses results are obtained considering the potential effects of SSI. The site-independent SSI analyses, which are discussed further in Section 3.7.2.4, consider generic subgrade conditions previously described in Section 3.7.1.3. For each one of the subgrade conditions considered, the analyses are performed with the ACS SASSI program (Reference 3.7-17R) where each one of the three directional

Page	Location (e.g., subsection with paragraph/ sentence/ item, table with row/column, or figure)	Description of Change
		components of the earthquake is applied separately to the model. The member and element forces results obtained from these analyses are then enveloped and used for development of seismic loads for design of structural members as previously described." Reason: Updated analysis methodology
3.7-20	Subsection 3.7.2.2 3rd Paragraph	Add the following sentences at end of existing paragraph: "Section 3.7.2.5 and Section 3NN.5 of Appendix 3NN discuss development of ISRS based on the results of the site-specific seismic analyses. Appendix 3NN compares the seismic responses and 5% damping ISRS obtained from the site-specific analyses of the R/B complex and the PS/Bs to the seismic responses and 5% damping ISRS obtained from site-independent analyses documented in MUAP-10006 (Reference 3.7-48)." Reason: Updated analysis methodology
3.7-21	Subsection 3.7.2.3.1 3rd Paragraph 1st Sentence	Change: "The models used for seismic analysis are developed by discretization of the mass inertia and stiffness properties of the dynamic system, such that the mass inertia of the system is lumped at distinct characteristic nodes, which are interconnected by a network of stiffness elements." to "The mass inertia and stiffness properties of the basemat and basement exterior walls of the R/B, and the entire PS/Bs, are characterized through the use of finite element models. Lumped mass stick models, interconnected by stiffness elements, are used to discretize the mass inertia and stiffness properties of the remaining portions of the R/B, the PCCV, and containment internal structure." Reason: Updated analysis methodology
3.7-21	Subsection 3.7.2.3.1 5th Paragraph 1st Sentence	Change: "The seismic analyses of the US-APWR standard plant are performed on three-dimensional lumped mass stick models representing the major seismic category I and seismic category II structures." to "The seismic analyses of the US-APWR standard plant are performed on three-dimensional seismic models representing seismic category I and seismic category II structures." Reason: Updated analysis methodology
3.7-21	Subsection 3.7.2.3.1	Replace in its entirety with the following: "Torsional and rocking/swaying effects are also captured at the

Page	Location (e.g., subsection with paragraph/ sentence/ item, table with row/column, or figure)	Description of Change
	5th Paragraph Last 2 Sentences	basemat/subgrade interface by taking into account SSI, including effects related to the flexibility of the basemat foundation. The SSI analyses are addressed in Subsection 3.7.2.4." Reason: Updated analysis methodology
3.7-22	Subsection 3.7.2.3.2 1st Paragraph	Replace in its entirety with the following: "The standard plant R/B complex seismic response analyses utilize lumped mass stick models representing the dynamic properties of the PCCV, containment internal structure, and the R/B superstructure above its basement. To account for the effects of dynamic coupling of the containment internal structure with the equipment and the piping, the analysis of the R/B complex includes lumped mass stick models representing the stiffness and mass inertia properties of the major equipment and piping, including the reactor vessel and reactor coolant loop. The methodology initially used to develop the stick models and the stick model properties is presented in Technical Report MUAP-08005 (Reference 3.7-18), and in the following Subsections 3.7.2.3.4 through 3.7.2.3.9. The methodology in Subsections 3.7.2.3.4 through 3.7.2.3.9 is enhanced by: adjusting member properties where necessary to account for the effects of concrete cracking, incorporating single degree of freedom models representing the out-of-plane flexibility of slabs and walls, and integrating the stick models with a finite element model of the R/B complex basement to form the overall SSI model of the R/B complex. Technical Report MUAP-10001 (Reference 3.7-47) presents the methodology used for these enhancements and describes the overall enhanced R/B complex model in further detail." Reason: Updated analysis methodology
3.7-23	Subsection 3.7.2.3.2 3rd Paragraph	Replace in its entirety with the following: "To model the interaction with the underlying subgrade, the standard plant R/B complex model is analyzed in conjunction with a set of eight generic layered profiles using the program ACS SASSI (Reference 3.7-17) as discussed in Subsection 3.7.2.4." Reason: Updated analysis methodology
3.7-23	Subsection 3.7.2.3.3	Change: "**East and West PS/Bs Lumped Mass Stick**

Page	Location (e.g., subsection with paragraph/ sentence/ item, table with row/column, or figure)	Description of Change
	Title	**Models**" to "**East and West PS/Bs Models**" Reason: Updated analysis methodology [RAI 212-1959 Question 3.7.2-18]
3.7-23	Subsection 3.7.2.3.3 1st Paragraph	Replace in its entirety with the following: "The seismic model for the PS/Bs is a finite element model in ACS SASSI (Reference 3.7-17) which represents the dynamic properties of the building in all important modes of vibration and is able to capture SSI effects related to the flexibility of the basemat foundation. The model is developed initially in ANSYS (Reference 3.7-21) for purposes of equivalent static structural design as explained further below, and is translated into the format of ACS SASSI for purposes of seismic analysis by using the built-in converter in ACS SASSI. The ACS SASSI FE model is generated only for the West PS/B of the US-APWR standard plant, since the East and West PS/Bs are nearly identical structurally." Reason: Updated analysis methodology [RAI 212-1959 Question 3.7.2-18]
3.7-24	Subsection 3.7.2.3.3 2nd Paragraph	Replace in its entirety with the following: "The structural walls and slabs, including the floor slabs and roof slabs are modeled using shell elements, the beams and columns are modeled as beam elements and the basemat is modeled using solid elements. At the connections between the basemat and the walls, the shell elements are extended into the basemat between the solid elements to transmit nodal rotations to the solid elements. The extended elements share nodes with the corresponding face of the solid elements but have no mass. The mass density properties of the finite elements are adjusted to account for the weight of the equipment and additional miscellaneous loading described in Section 3.8. The meshing of the seismic model ensures that the discretized structure is able to capture the local responses and the responses of the significant modes of vibration which corresponds to frequencies equal or below the highest frequency of interest, 50Hz. The seismic model is analyzed with ACS SASSI in conjunction with the generic soil profiles described in Subsection 3.7.1.3 to obtain SSI results and input loading for equivalent static analysis and structural design. The PS/B seismic model and the seismic analysis results are discussed in further detail in

Page	Location (e.g., subsection with paragraph/ sentence/ item, table with row/column, or figure)	Description of Change
		Technical Reports MUAP-10001 and MUAP-10006 (References 3.7-47 and 3.7-48), respectively." Reason: Updated analysis methodology [RAI 212-1959 Question 3.7.2-18]
3.7-21	3.7.2.3.6.1 4th Paragraph	Change: "Vertical amplification effects on the masses of floor slab systems due to out-of-plane flexibility are addressed as part of a later Technical Report." to "Vertical amplification effects on the masses of floor slab systems due to out-of-plane flexibility are addressed as part of Technical Reports MUAP-10001 and MUAP-10006 (References 3.7-47 and 3.7-48)." Reason: Provide technical report numbers
3.7-25	3.7.2.3.10 Title	Change: "**Validation of the Lumped Mass Stick Models**" to "**Validation of the Seismic Models**" Reason: Updated analysis methodology [RAI 212-1959 Question 3.7.2-3]
3.7-25	3.7.2.3.10 1st Paragraph	Change: "The seismic response of R/B and containment internal structure is obtained from the analyses of three-dimensional lumped-mass stick models whose stiffness and mass properties are evaluated by hand calculation as described in the previous section. As described herein, detailed FE mathematical models that are initially prepared for static design analysis of these structures are used to verify that the lumped mass stick models realistically represent the dynamic properties of the R/B and containment internal structure." to "The seismic response of R/B and containment internal structure is obtained from the analyses of three-dimensional seismic models, portions of which are lumped mass stick models whose stiffness and mass properties are evaluated by hand calculation as described in the previous section. The seismic response of the PS/Bs is obtained from analyses of three-dimensional finite element seismic models. As described herein, detailed FE mathematical models that are initially prepared for static design analysis of these structures are used to verify that the seismic models realistically represent the dynamic properties of the R/B complex and PS/Bs." Reason: Updated analysis methodology [RAI 212-1959 Question 3.7.2-3]

Page	Location (e.g., subsection with paragraph/ sentence/ item, table with row/column, or figure)	Description of Change
3.7-27	Subsection 3.7.2.3.10.3 Last Paragraph	Add the following subsection behind last paragraph of preceding subsection: 3.7.2.3.10.4 PCCV i) Fixed-base FE model Figure 3.7.2-1 shows the fixed-base FE model for the PCCV, which is compared with the three-dimensional stick model of the superstructure. To verify the three-dimensional stick model, the FE model is used to estimate its rigidity by both static and dynamic analyses. ii) Rigidity estimation by static analysis Comparisons of static deformations are made between the three-dimensional stick model and the FE model, following the general approach discussed above. iii) Comparison of ISRS Comparisons of ISRS are made between the three-dimensional stick model and the FE model at various nodes. iv) Modal analysis A modal analysis is performed for the three-dimensional finite element model and the SASSI stick model to compare the structure's dominant natural frequencies. Reason: Updated analysis methodology [RAI 212-1959 Question 3.7.2-3]
3.7-27	Subsection 3.7.2.3.10.4 Last Paragraph	Add the following subsection behind last paragraph of preceding subsection: **3.7.2.3.10.5 PS/Bs** As previously discussed, the PS/B seismic model is developed from a detailed FE model initially prepared for the detailed static analysis. The PS/Bs seismic model is validated by performing various static and dynamic structural analyses on both the static and dynamic models considering a "fixed base condition," i.e., full constraints on translation and rotation at the bottom of the basemat. The analyses include a 1g static analysis performed to confirm static load/deformation distributions and dynamic properties, modal analysis, and mode-superposition transient dynamic analysis

Page	Location (e.g., subsection with paragraph/ sentence/ item, table with row/column, or figure)	Description of Change
		using the corresponding ANSYS Solver. Transfer functions and ISRS obtained from the SASSI validation analyses at selected nodes are compared to the results obtained from the modal and modal superposition time history analyses on the detailed static model to ensure that SASSI model is accurately representing dynamic properties of the PS/B. Reason: Updated analysis methodology [RAI 212-1959 Question 3.7.2-3]
3.7-28	Subsection 3.7.2.4 1st Paragraph 2nd & 3rd Sentences	Replace in its entirety with the following: "The SSI analyses use seismic models that are described above in Section 3.7.2.3 to represent the dynamic properties of the structures. The ACS SASSI (Reference 3.7-17) PS/Bs model and enhanced R/B lumped mass stick model, combined in ACS SASSI with the FE model of the basement, provide adequate degrees of freedom to ensure that the modeling requirements of SRP 3.7.2, Section II A (iv) are met, and that the seismic response in the high frequency range is captured. For the R/B complex and PS/Bs, site-specific SSI analyses are also performed using the computer program ACS SASSI in order to confirm that site-specific effects are enveloped by the site-independent analyses." Reason: Updated analysis methodology
3.7-29	Subsection 3.7.2.4 2nd Paragraph	Replace in its entirety with the following: "The site-independent SSI analyses take into account the flexibility of the basemat, frequency-dependence of the SSI impedance, layering of the subgrade, elevation of the water table, and scattering of the input motion. The SSI analyses are performed with ACS SASSI (Reference 3.7-17) in the frequency domain utilizing the substructuring technique and complex stiffness representation of stiffness and damping properties of the structures and the subgrade. The subgrade media and SSI system damping to model the dissipation of energy due to material damping of the structural members and the soil are also discussed in Subsections 3.7.1.3 and 3.7.1.2. The response of the system at selected frequencies of analyses is obtained as the solution of a set of complex algebraic equations. The frequencies of analyses are selected to accurately capture the response of the structure at all important frequency ranges. The amplitudes of the interpolated transfer functions are plotted and investigated to ensure the accuracy of the interpolation of the response for the

Page	Location (e.g., subsection with paragraph/ sentence/ item, table with row/column, or figure)	Description of Change
		required range of frequencies. Approaches and methods used for the SSI analyses are discussed further in Technical Report MUAP-10001 (Reference 3.7-47)." Reason: Updated analysis methodology
3.7-30	Subsection 3.7.2.4 4th & 5th Paragraphs	Replace in its entirety with the following: "The SSI analyses are performed as previously described by analyzing the seismic models in ACS SASSI (Reference 3.7-17) in conjunction with the generic soil profiles with depths to rock as discussed in Subsection 3.7.1.3, including a profile which simulates a site with hard rock at a depth of 100 ft. The profiles have dynamic properties that are strain-compatible with the CSDRS input ground motion as discussed in Subsection 3.7.1.3, and the input ground motion time histories are applied separately in each direction in the SASSI analyses." Reason: Updated analysis methodology
3.7-32	Subsection 3.7.2.5 1st Paragraph	Replace in its entirety with the following: "ISRS for the PS/Bs and RCL-R/B-containment internal structure are developed from the results of the site-independent seismic analyses of the seismic models described in Subsection 3.7.2.3 by applying methods described in Subsection 3.7.2.1, and capturing SSI effects as described in Subsection 3.7.2.4, using generic soil profiles described in Subsection 3.7.1.3. The statistically independent time histories developed from the CSDRS as described in Subsection 3.7.1.1 serve as input control motion in the analysis. Note that the dynamic properties of the stick model portions of the R/B complex seismic model presented in Appendix 3H and Technical Report MUAP-08005 (Reference 3.7-18) are modified to account for the effects of cracking for accuracy in the seismic design and development of the ISRS. The ISRS are derived from the calculated responses at locations and elevations where majority seismic category I and II SSCs are located." Reason: Updated analysis methodology
3.7-32	Subsection 3.7.2.5 2nd Paragraph Last Sentence	Change: "The local analyses of floor slab systems with respect to out-of-plane flexibility and effects on the ISRS are addressed as part of a later Technical Report." to "The local analyses of floor slab systems with respect to

Page	Location (e.g., subsection with paragraph/ sentence/ item, table with row/column, or figure)	Description of Change
		out-of-plane flexibility and effects on the ISRS are addressed in Technical Reports MUAP-10001 and MUAP-10006 (References 3.7-47 and 3.7-48)." Reason: Provide technical report numbers
3.7-33	Subsection 3.7.2.5 5th Paragraph 2nd – 5th Sentences	Replace in its entirety with the following: "The ISRS envelope the spectra obtained from the site-independent analyses for all generic subgrade conditions described in Subsection 3.7.1.3. 5% critical damping ISRS developed from the site-independent seismic analyses of the R/B complex and PS/Bs, which are used for design and validation by comparison to site-specific 5% critical damping ISRS, are provided in Appendix 3I. The process for developing enveloped ISRS is described in detail in Section 3.5 of Technical Report MUAP-10006 (Reference 3.7-47) and is summarized as follows:" Reason: Updated analysis methodology
3.7-33	Subsection 3.7.2.5 5th Paragraph 3rd Bullet 2nd Sentence	Change: "… but bounded by, the four generic soil conditions of the standard plant." to "… but bounded by, the generic soil conditions of the standard plant." Reason: Updated analysis methodology
3.7-34	Subsection 3.7.2.6 2nd Paragraph 1st Sentence	Change: "The three components of the earthquake are applied on the lumped mass stick model separately and the maximum accelerations of the response in the three orthogonal directions are calculated at each lumped mass point." to "The three components of the earthquake are applied on the seismic model separately in ACS SASSI (Reference 3.7-17) for obtaining the maximum accelerations of the response in the three orthogonal directions." Reason: Updated analysis methodology
3.7-35	Subsection 3.7.2.7 1st Paragraph	Replace in its entirety with the following: "As previously discussed, the seismic responses of the seismic category I building models are obtained using three-dimensional SSI models with the program ACS SASSI (Reference 3.7-17). ACS SASSI utilizes time history analysis in the frequency domain in which the equations of motion are solved using a global complex matrix that is assembled from the complex matrices for the soil and structural elements. Therefore modal

Page	Location (e.g., subsection with paragraph/ sentence/ item, table with row/column, or figure)	Description of Change
		combination is not utilized." Reason: Updated analysis methodology
3.7-40	Subsection 3.7.2.8.6 1st Paragraph 1st Sentence	Change: "The US-APWR standard plant PS/Bs are seismic Category I structures and their design is described in a separate Technical Report (Reference 3.7-33)." to "The US-APWR standard plant PS/Bs are Seismic Category I structures and their seismic modeling and analyses are described in Technical Reports MUAP-10001 and MUAP-10006 (References 3.7-47 and 3.7-48, respectively)." Reason: Updated analysis methodology
3.7-41	Subsection 3.7.2.8.6 2nd Paragraph 4th Bullet	Change: "The design of the PS/Bs is based on a static analysis utilizing a three-dimensional FE model, and a seismic dynamic analysis using a three-dimensional lumped mass model." to "The design of the PS/Bs is based on a static analysis utilizing a three-dimensional FE model, and a seismic dynamic analysis using a three-dimensional FE model in SASSI (Reference 3.7-17)." Reason: Updated analysis methodology
3.7-41	Subsection 3.7.2.9 2nd Paragraph 1st – 3rd Sentences	Replace in its entirety with the following: "The SSI analyses of standard plant seismic category I buildings described in Subsection 3.7.2.4 include generic supporting media with frequency-dependent properties that are intended to bound the varying subgrade conditions and to account for the variation in SSI analysis techniques and seismic modeling methods. The generic supporting media are described in Subsection 3.7.1.3 and capture a broad range of subgrade conditions ranging from relatively soft soil to hard rock." Reason: Updated analysis methodology
3.7-43	Subsection 3.7.2.12 2nd Paragraph 1st Sentence	Replace in its entirety with the following: "As described in Subsection 3.7.1.1, the time history analyses are based on design ground motion time histories which have been synthesized from seed recorded time histories and meet the requirements of "Acceptance Criteria, Design of Time History Option 1: Single Set of Time Histories, Approach 2", NUREG-0800, SRP 3.7.1, Section II (Reference 3.7-10)." Reason: Updated analysis methodology

Page	Location (e.g., subsection with paragraph/ sentence/ item, table with row/column, or figure)	Description of Change
3.7-43	Subsection 3.7.3 1st Paragraph 3rd Sentence	Change: "However, seismic analysis of the subsystems has generally been performed separately…" to "However, seismic analysis of the subsystems are generally performed separately…" Reason: Editorial correction
3.7-53	Subsection 3.7.4.1 2nd and 3rd Paragraphs	Replace in its entirety with the following: "The criteria that define the vibratory motion that requires the shutdown of the US-APWR plant are based on the site-specific OBE. The 5% damping FIRS associated with the site-specific OBE must be enveloped by 1/3 of the 5% damping CSDRS. The conditions that require a shutdown of the US-APWR plant are defined by the site-specific OBE at the free-field instrumentation located at grade in the plant yard, unless otherwise justified by the COL Applicant. Unless site-specific OBE is set at 1/3 of the site-specific SSE or lower, these spectra shall be obtained from analysis using as input the site-specific OBE ground motion and properties of the supporting media that are strain-compatible to the site-specific OBE ground motion. When the site-specific OBE is equal or lower than 1/3 of site-specific SSE, the spectra scaled from the 5% damping site-specific SSE response spectra may be used directly for OBE exceedance checks. An OBE exceedance check is performed in accordance with Section 4 of RG 1.166 (Reference 3.7-41) using both a response spectrum check and a cumulative absolute velocity (CAV) check. The comparison evaluation is to be performed within 4 hours of the earthquake using data obtained from the three components of the earthquake motion as defined by the three orthogonal axes of the standard plant (two horizontal and one vertical) on the uncorrected earthquake records. The evaluation is also to include a check on the operability of the seismic instrumentation as mandated by Section 4.3 of RG 1.166 (Reference 3.7-41). The locations of seismic monitors for the US-APWR standard plant are provided in Subsection 3.7.4.2. The COL Applicant shall provide free-field seismic instrumentation in the vicinity of the power block area at surface grade, which shall be used for shutdown determination, unless otherwise justified. Any such justification shall be based on conditions and requirements specific to the site, and shall include justification for evaluation of OBE exceedance using

Page	Location (e.g., subsection with paragraph/ sentence/ item, table with row/column, or figure)	Description of Change
		only measurements from instrumentation installed on the buildings and the structures of the US-APWR standard plant." Reason: Clarified to reflect that the COL Applicant is expected to provide free-field seismic instrumentation in the vicinity of the power block area at surface grade, which shall be used for shutdown determination, unless otherwise justified. [RAI 632-5041, Question 03.07.04-4]
3.7-54	Subsection 3.7.4.1 5th Paragraph 1st Sentence	Change: "Acceleration and velocity spectra can be calculated from the measurement of free-field ground motion in order to set additional conditions for OBE exceedance in addition to the CAV check. The site-specific OBE is exceeded only if all of the following three conditions identified in RG 1.166 (Reference 3.7-41) are met:" to "The site-specific OBE is exceeded and plant shutdown is required in accordance with the criteria of RG 1.166 (Reference 3.7-41), if the first of the following three conditions in combination with either the second or third conditions are met:" Reason: Clarified to reflect that the COL Applicant is expected to provide free-field seismic instrumentation in the vicinity of the power block area at surface grade, which shall be used for shutdown determination, unless otherwise justified. [RAI 632-5041, Question 03.07.04-4]
3.7-54	Subsection 3.7.4.1 6th Paragraph	Change: "The shutdown of the plant is required only if all three of the above conditions are met and any of the 5% damping ARS obtained from the measurements of the instructure accelerations exceed the OBE spectra at the corresponding location. If the free-field ground motion is not measured, it is conservatively assumed that the checks of CAV and free-field ground accelerations and velocities are exceeded." to "If free-field instrumentation is not used, the criteria of RG 1.166 Appendix A are used for OBE exceedance checks, it is assumed that the checks of CAV and free-field ground spectra are exceeded, and shutdown of the plant is required if the 5% damping spectra are exceeded at any of the in-structure instrumentation." Reason: Clarified the proposed shutdown conditions for OBE exceedance criteria. [RAI 538-4320 Question 03.07.04-03]
3.7-55	Subsection 3.7.4.2	Add as last bullet: "• Unless otherwise justified by the COL Applicant based on site-specific conditions, at a

Page	Location (e.g., subsection with paragraph/ sentence/ item, table with row/column, or figure)	Description of Change
	3rd Paragraph Last Bullet	surface grade location in the vicinity of the power block area, sufficiently far away from structures in order to appropriately measure free-field ground motion." Reason: Clarified to reflect that the COL Applicant is expected to provide free-field seismic instrumentation in the vicinity of the power block area at surface grade, which shall be used for shutdown determination, unless otherwise justified. [RAI 632-5041, Question 03.07.04-4]
3.7-56	Subsection 3.7.4.4 1st Paragraph	Change: "In accordance with RG 1.166 (Reference 3.7-41), it can be assumed that the checks of CAV and free-field ground accelerations and velocities are exceeded so the US-APWR standard plant does not have to rely upon seismic instrumentation located in the free field for checks of OBE exceedance. As previously discussed in Subsection 3.7.4.1, the OBE exceedance checks can be performed…" to "As previously discussed in Subsection 3.7.4.1, the seismic instrumentation and OBE exceedance checks meet the intent of RG 1.166 (Reference 3.7-41). In the case that the COL Applicant provides acceptable justification for not utilizing free-field instrumentation, the OBE exceedance checks can be performed…" Reason: Clarified to reflect that the COL Applicant is expected to provide free-field seismic instrumentation in the vicinity of the power block area at surface grade, which shall be used for shutdown determination, unless otherwise justified. [RAI 632-5041, Question 03.07.04-4]
3.7-58	Subsection 3.7.5 COL 3.7(7)	Change: "*The COL Applicant is to determine the allowable dynamic bearing capacity based on site conditions, and to evaluate the bearing load to this capacity."* to *"The COL Applicant is to determine the allowable static and dynamic bearing capacities based on site conditions, including the properties of fill concrete placed to provide a level surface for the bottom of foundation elevations, and to evaluate the bearing loads to these capacities."* Reason: Revised COL 3.7(7) to clarify that the properties of fill concrete used as a supporting medium are also discussed in DCD Subsection 3.7.1.3. [RAI 496-3735 Question 03.08.05-35] and provided clarification [RAI 643-4967, Question 03.07.01-12]
3.7-59	Subsection 3.7.5	Change: "*The COL Applicant is to verify the site-specific applicability of these monitors, and determine if there is*

Page	Location (e.g., subsection with paragraph/ sentence/ item, table with row/column, or figure)	Description of Change
	COL 3.7(16)	*a need for the installation of additional instrumentation for the measurement of the free-field ground motion based on conditions and requirements specific to the site."* to "*The COL Applicant shall provide free-field seismic instrumentation in the vicinity of the power block area at surface grade which shall be used for shutdown determination, unless otherwise justified. Any such justification shall be based on conditions and requirements specific to the site, and shall include justification for evaluation of OBE exceedance using only measurements from instrumentation installed on the buildings and the structures of the US-APWR standard plant."* Reason: Clarified to reflect that the COL Applicant is expected to provide free-field seismic instrumentation in the vicinity of the power block area at surface grade, which shall be used for shutdown determination, unless otherwise justified. [RAI 632-5041, Question 03.07.04-4]
3.7-60	Subsection 3.7.5 COL 3.7(22)	Change: "*The COL Applicant is required to perform site-specific seismic analyses, including SSI analysis which considers seismic wave transmission incoherence and analysis of the CAV of the seismic input motion, in order to determine if high-frequency exceedances of the CSDRS could be transmitted to SSCs in the plant superstructure with potentially damaging effects.*" to "*The COL Applicant is required to perform site-specific seismic analyses, including SSI analysis which may consider seismic wave transmission incoherence and analysis of the CAV of the seismic input motion, in order to determine if high-frequency exceedances of the CSDRS could be transmitted to SSCs in the plant superstructure with potentially damaging effects.*" Reason: Inserted auxiliary verb in COL3.7(22).
3.7-63	Subsection 3.7.6 Reference 3.7-33	Change: "<u>Enhanced Information for PS/B Design</u>, MUAP-08002 Rev. 0, February 2008." to "Deleted" Reason: MUAP-08002 is superseded in its entirety by MUAP-10001 Revision 2.
3.7-64	Subsection 3.7.6 Reference 3.7-47	Add the following as new Reference: "3.7-47 <u>Seismic Design Bases of the US-APWR Standard Plant</u>, MUAP-10001, Revision 2, Mitsubishi Heavy Industries, Ltd., December 2010." Reason: Updated analysis methodology

Page	Location (e.g., subsection with paragraph/ sentence/ item, table with row/column, or figure)	Description of Change
3.7-64	Subsection 3.7.6 Reference 3.7-48	Add the following as new Reference: "3.7-48 Soil-Structure Interaction Analyses and Results for the US-APWR Standard Plant, MUAP-10006, Revision 1, Mitsubishi Heavy Industries, Ltd., December 2010." Reason: Updated analysis methodology
3.7-67	Table 3.7.1-3 4th Row 4th Column	Change: " 139'-6" " to " 175'-9" " Reason: Correct typographical error.
3.7-67	Table 3.7.1-3 Last Row 2nd through 4th Columns	Change in the 2nd Column: " 37'-3" " to "38'-10" " Change in the 3rd Column: " 71' x 117' " to "66'-0" x 111'-6" " Change in the 4th Column: " 51'-11" " to "87'-4" " Reason: Correct typographical error.
3.7-67	Table 3.7.1-3 Note 3	Change: "Width and height are the distances between column lines of exterior walls." " to "Width and length are the distances between column lines of exterior walls." Reason: Correct typographical error.
3.7-68	Table 3.7.1-4 Title	Change: "Comparison of 5% Damping ARS of Artificial Time Histories with 5% Damping CSDRS" to "Comparison of 5% Damping ARS of Synthesized Time History CSDRS" Reason: Updated analysis methodology
3.7-68	Table 3.7.1-4	Update data fields to correspond with updated analysis results Reason: Updated analysis methodology
3.7-68	Table 3.7.1-4 Note 1 2nd Sentence	Delete sentence in its entirety. Reason: Updated analysis methodology
3.7-69	Table 3.7.1-5 Title	Change: "**Duration of Motion of US-APWR Artificial Time Histories with Respect to Arias Intensity**" to "**Duration of Motion of US-APWR Time Histories**

Page	Location (e.g., subsection with paragraph/ sentence/ item, table with row/column, or figure)	Description of Change
		with Respect to Arias Intensity" Reason: Updated analysis methodology
3.7-69	Table 3.7.1-5	Update data fields to correspond with updated analysis results Reason: Updated analysis methodology
3.7-70	Table 3.7.1-5	Insert new Table 3.7.1-6 behind existing Table 3.7.1-5
3.7-71	Table 3.7.2-1	Update data fields to correspond with updated analysis results Reason: Updated analysis methodology
3.7-72	Table 3.7.2-1 Notes	Update notes to correspond with updated analysis results Reason: Updated analysis methodology
3.7-78	Figure 3.7.1-3 Title	Change: "**Figure 3.7.1-3 Artificial Time Histories Plots (H1)**" to "**Figure 3.7.1-3 Acceleration, Velocity, and Displacement Time History for Component H1**" Reason: Updated analysis methodology
3.7-78	Figure 3.7.1-3	Replaced in its entirety Reason: Updated analysis methodology
3.7-79	Figure 3.7.1-4 Title	Change: "**Figure 3.7.1-4 Artificial Time Histories Plots (H2)**" to "**Figure 3.7.1-4 Acceleration, Velocity, and Displacement Time History for Component H2**" Reason: Updated analysis methodology
3.7-79	Figure 3.7.1-4	Replaced in its entirety Reason: Updated analysis methodology
3.7-80	Figure 3.7.1-5 Title	Change: "**Figure 3.7.1-5 Artificial Time Histories Plots (V)**" to "**Figure 3.7.1-5 Acceleration, Velocity, and Displacement Time History for Component V**" Reason: Updated analysis methodology
3.7-80	Figure 3.7.1-5	Replaced in its entirety Reason: Updated analysis methodology
3.7-81	Figure 3.7.1-6	Change: "**Figure 3.7.1-6 Artificial Time Histories**

Page	Location (e.g., subsection with paragraph/ sentence/ item, table with row/column, or figure)	Description of Change
	Title	**Response Spectra (H1)**" to "**Figure 3.7.1-6 5% Damped Time History for Response Spectra (H1)**" Reason: Updated analysis methodology
3.7-81	Figure 3.7.1-6	Replaced in its entirety Reason: Updated analysis methodology
3.7-82	Figure 3.7.1-7 Title	Change: "**Figure 3.7.1-7 Artificial Time Histories Response Spectra (H2)**" to "**Figure 3.7.1-7 5% Damped Time History for Response Spectra (H2)**" Reason: Updated analysis methodology
3.7-82	Figure 3.7.1-7	Replaced in its entirety Reason: Updated analysis methodology
3.7-83	Figure 3.7.1-8 Title	Change: "**Figure 3.7.1-8 Artificial Time Histories Response Spectra (V)**" to "**Figure 3.7.1-8 5% Damped Time History for Response Spectra (V)**" Reason: Updated analysis methodology
3.7-83	Figure 3.7.1-8	Replaced in its entirety Reason: Updated analysis methodology
3.8-8	Subsection 3.8.1.4 2nd Paragraph 1st Sentence	Change: "For the US-APWR, which is based on a soil-spring modeling approach to represent the subgrade supporting media on a generic basis, the PCCV seismic analysis includes its basemat as well as the R/B and containment internal structure." to "The PCCV analysis methods are summarized in Table 3.8.1-4. For the US-APWR, the PCCV seismic analysis includes its basemat as well as the R/B and containment internal structure." Reason: Updated analysis methodology
3.8-9	Subsection 3.8.1.4.1.1 4th Paragraph 1st Sentence	Change: "In designing the PCCV superstructure, individual nodal spring stiffnesses are applied at the supporting FE model boundary (i.e, the basemat/soil interface) to represent the properties of elastic soil springs with tension capability because the SRSS method based on elastic analyses is used to evaluate the seismic load for the three components of the earthquake." to "In designing the PCCV superstructure, the square root of the sum of the squares (SRSS)

Page	Location (e.g., subsection with paragraph/ sentence/ item, table with row/column, or figure)	Description of Change
		method based on elastic analyses is used to evaluate the seismic load for the three components of the earthquake." Reason: Updated analysis methodology
3.8-57	Subsection 3.8.4.4.1 4th Paragraph 2nd Sentence	Change: "Seismic forces are obtained from the dynamic analysis of the three-dimensional lumped-mass stick model described in Subsection 3.7.2." to "Seismic forces are obtained from the dynamic analysis described in Subsection 3.7.2." Reason: Updated analysis methodology
3.8-60	Subsection 3.8.4.4.2 3rd Paragraph 2nd Sentence	Change: "Seismic forces are obtained from the dynamic analysis of the three-dimensional lumped-mass stick model described in Subsection 3.7.2. " to "Seismic forces are obtained from the dynamic analysis described in Subsection 3.7.2." Reason: Updated analysis methodology
3.8-72	Subsection 3.8.5.4.1 1st Paragraph	Replace in its entirety with the following: "For the purposes of the US-APWR standard design, the SSI effects are captured using a representative suite of soil profiles and depths to baserock material with frequency dependent properties. Section 3.7.2.4 provides further discussion relating to SSI and the selection of subgrade types." Reason: Updated analysis methodology
3.8-72	Subsection 3.8.5.4.1 2nd Paragraph	Replace in its entirety with the following: "The soil profiles, due to the frequency-dependency of multiple soil layers, are variable opposed to fixed values. Documenting of typical (generic) subgrade conditions is not applicable." Reason: Updated analysis methodology
3.8-73	Subsection 3.8.5.4.1 3rd Paragraph	Replace in its entirety with the following: "A set of eight (8) generic layered profiles are selected for SSI analyses, which strain-compatible properties, shear-wave (Vs) and compressional-wave (Vp) velocities and corresponding hysteretic damping values provide a wide variation of properties that addresses soil properties. The development of frequency dependent properties used in the seismic analyses is

Page	Location (e.g., subsection with paragraph/ sentence/ item, table with row/column, or figure)	Description of Change
		described further in Section 3.7.2.4." Reason: Updated analysis methodology and RAI 496-3735, Question 03.08.05-25
3.8-74	Subsection 3.8.5.4.3 1st Paragraph 1st & 2nd Sentences	Change: "The basemat subgrade in the FE model is represented by translational spring elements that are attached to the bottom of the basemat. The stiffness of the backfill around the below-grade walls is not considered in the model." to "An SSI analysis is performed on the SASSI model of the R/B with the model resting on the surface of a half-space with hard-rock properties. This is to simulate the response of the structure under a fixed base condition" Reason: Updated analysis methodology
3.8-111	Table 3.8.5-3	Replace table in its entirety with the following: "**Table 3.8.5-3** Deleted" Reason: Updated analysis methodology
3.8-185	Figure 3.8.3-6 Sheet 6	Revised drawing to fill concrete in the concavity portion in PCCV foundation. Reason: Corrected figure due to DCD Rev. 2 change.
3.8-186	Figure 3.8.3-6 Sheet 7	Revised drawing to fill concrete in the concavity portion in PCCV foundation. Reason: Corrected figure due to DCD Rev. 2 change.
3.8-188	Figure 3.8.3-7 Sheet 2	Change: "Bese Plate and Rebar for Shield Wall" to "Base Plate and Rebar for Shield Wall" Reason: Correct Typographical error
3.9-111 to 119	Table 3.9-13 Sheets 1-9 Last Column	Revise the Acceptance Criteria in all rows excluding the Essential service water pumps from: Table ISTB-5121-1 in ASME OM Code (Reference 3.9-13) is applied." to "Table ISTB-5100-1 in ASME OM Code (Reference 3.9-13) is applied." Reason: Editorial correction
3.9-114 to 115	Table 3.9-13 Sheets 4-5	Revise the Acceptance Criteria for the Essential service water pumps from: Table ISTB-5121-1 in ASME OM Code (Reference 3.9-13) is applied." to "Table ISTB-

Page	Location (e.g., subsection with paragraph/ sentence/ item, table with row/column, or figure)	Description of Change
	Last Column	5200-1 in ASME OM Code (Reference 3.9-13) is applied." Reason: Editorial correction
3.9-223 to 224	Table 3.9-14 Sheets 104 and 105 Rows for EWS-MOV-503A,B,C,D 4th Column	Add "Transfer Close" Reason: Revised to add the transfer close function for ESWP discharge MOVs. [RAI-585-4464, Question 09.02.01-43]
3.9-224 to 225	Table 3.9-14 Sheets 105 and 106 Rows for EWS-VLV-602A,B,C,D	Delete 4 Rows for Valves EWS-VLV-602 (A-D) Reason: Removed the ESWP cooling water check valves. [UAP-HF-09521, 11/17/09]
3.9-225 to 227	Table 3.9-14 Sheets 106-108	Added 8 Rows for Valves EWS-MOV-573 (A-D) and EWS-MOV-574 (A-D) Reason: Added the ESWP discharge strainer backwash isolation valves in the Valve Inservice Test Program. [RAI 585-4464, Question 09.02.01-43]
3.11-1	Section 3.11 4th Paragraph	Change: "The implementation of the US-APWR EQ Program is described in a Technical Report titled, US-APWR Equipment Environmental Qualification Program issued as a separate report (Reference 3.11-3)." to "The implementation of the US-APWR EQ Program is described in MHI Technical Report MUAP-08015 titled, US-APWR Equipment Qualification Program issued as a separate report (Reference 3.11-3)." Reason: Editorial correction
3D-33	Table 3D-2 Sheet 29 Item 31 2nd Column	Change: "CVS-FCV128" to "CVS-FCV-128" Reason: Editorial correction
3D-48	Table 3D-2	Added 8 Rows for Valves EWS-MOV-573 (A-D) and

Page	Location (e.g., subsection with paragraph/ sentence/ item, table with row/column, or figure)	Description of Change
	Sheet 44	EWS-MOV-574 (A-D) Reason: Editorial correction to add the ESWP discharge strainer backwash isolation valves in the Valve Inservice Test Program to ensure consistency of items included in Table 3D-2 and Table 3.9-14. [Table 3.9-14 was changed due to RAI 585-4464, Question 09.02.01-43]
3D-49	Table 3D-2 Sheet 45 Item 28 2nd Column	Change: "LMS-AOV-1000A" to "LMS-LCV-010A" Reason: Valve sequence number error.
3D-49	Table 3D-2 Sheet 45 Item 29 2nd Column	Change: "LMS-AOV-1000B" to "LMS-LCV-010B" Reason: Valve sequence number error.
	Appendix 3H Title Page	Change: "MODEL PROPERTIES FOR LUMPED MASS STICK MODELS OF R/B-PCCV-CONTAINMENT INTERNAL STRUCTURE ON A COMMON BASEMAT, AND PS/BS ON INDIVIDUAL BASEMATS" to "MODEL PROPERTIES FOR LUMPED MASS STICK MODELS OF R/B-PCCV-CONTAINMENT INTERNAL STRUCTURE ON A COMMON BASEMAT" Reason: PS/Bs no long analyzed using lumped mass stick model [RAI 212-1950 Question 3.7.2-18]
	Section 3H Title	Change: "Model Properties for Lumped Mass Stick Models of R/B-PCCV-Containment Internal structure on a Common Basemat, And PS/Bs on Individual Basemats" to "Model Properties for Lumped Mass Stick Models of R/B-PCCV-Containment Internal structure on a Common Basemat" Reason: PS/Bs no long analyzed using lumped mass stick model [RAI 212-1950 Question 3.7.2-18]
3H-1	Subsection 3H.1 1st Paragraph 2nd Sentence	Change: "This Appendix also discusses the properties of the east and west power source buildings (PS/Bs) lumped mass stick model used for the seismic analysis." to "The east and west power source buildings (PS/Bs) are not analyzed using lumped mass stick models, and

Page	Location (e.g., subsection with paragraph/ sentence/ item, table with row/column, or figure)	Description of Change
		this Appendix is therefore not applicable to these buildings." Reason: PS/Bs no long analyzed using lumped mass stick model [RAI 212-1950 Question 3.7.2-18]
3H-1	Subsection 3H.1 2nd Paragraph 1st Sentence	Change: "This Appendix presents the results of the seismic analyses performed on the lumped mass stick model, but does not address ..." to "This Appendix presents lumped mass stick model properties, but does not address ..." Reason: Updated analysis methodology
3H-1	Subsection 3H.2 1st Paragraph 1st Sentence	Change: "Lumped mass stick models of the R/B, PCCV, and containment internal structure are developed …" to "Lumped mass stick models of the R/B, PCCV, and containment internal structure, hereafter referred to as the R/B complex, are developed …" Reason: Updated analysis methodology
3H-1	Subsection 3H.2 1st Paragraph 3rd Sentence	Change: "Frequency independent SSI lumped parameters representing the stiffness and damping properties of the interaction of the basemat with the underlying subgrade are added at the base of the combined model to simulate a range of different subgrade conditions." to "A set of site-independent SSI analyses are performed on the surface of eight generic subgrade profiles." Reason: Updated analysis methodology
3H-1	Subsection 3H.2 2nd Paragraph	Replace in its entirety with the following: "The overall modeling approach and procedures for this lumped mass stick model is discussed in Section 3.7.2.3.2. The envelope of amplified response spectra results at selected locations is used to develop broadened ISRS." Reason: Updated analysis methodology
3H-2	Subsection 3H.2 7th – 9th Paragraphs	Replace in its entirety with the following: "3-D beam and spring elements are used to model the stiffness of the reinforced concrete shear walls, PCCV, and the steel-concrete (SC) modules of the containment internal structure above the ground elevation. The cross sectional properties of the beam elements and the stiffness properties of the spring elements are

Page	Location (e.g., subsection with paragraph/ sentence/ item, table with row/column, or figure)	Description of Change
		developed in MUAP-08005 (Reference 3H-1) following the methodology described in Section 3.7.2." Reason: Updated analysis methodology
3H-2	Subsection 3H.2 Last Paragraph	Change: "Table 3H.2-14 presents the combined R/B-PCCV-containment internal structure SSI lumped parameter coefficients, soil springs representing the SSI stiffness and damping coefficients representing the dissipation of energy in the SSI system. The SSI lumped parameter coefficients are computed for each of the three flexible generic subgrade conditions using the formulas and general approaches given in American Society of Civil Engineers (ASCE) 4 (Reference 3H-2), discussed in further detail in Subsection 3.7.2.4. The SSI stiffness constants and damping coefficients shown in Table 3H.2-14 are applied at node BB01 representing the bottom center of the basemat, as shown in Figure 3H.2-1. Table 3H.2-15 presents the SSI lumped parameter for the PS/Bs." to "Table 3H.2-14 presents the R/B complex SSI lumped parameter coefficients, soil springs representing the SSI stiffness and damping coefficients representing the dissipation of energy in the SSI system. The SSI lumped parameter coefficients are computed for a representative suite of soil profiles and depths to baserock material with frequency dependent properties, discussed in further detail in Subsection 3.7.2.4. The SSI stiffness constants and damping coefficients shown in Table 3H.2-14 are applied at the bottom center of the basemat" Reason: Updated analysis methodology
3H-2	Subsection 3H.3	Replaced in its entirety with the following: "**3H.3** Deleted" Reason: Updated analysis methodology
3H-3	Subsection 3H.4 Reference 3H-2	Replaced in its entirety with the following: "3H-2 Deleted" Reason: Updated analysis methodology
3H-5	Table 3H.2-2	Replaced in its entirety Reason: Updated analysis methodology
3H-6	Table 3H.2-3	Replaced in its entirety

Page	Location (e.g., subsection with paragraph/ sentence/ item, table with row/column, or figure)	Description of Change
		Reason: Updated analysis methodology
3H-7	Table 3H.2-4	Replaced in its entirety Reason: Updated analysis methodology
3H-8	Table 3H.2-5	Replaced in its entirety Reason: Updated analysis methodology
3H-9	Table 3H.2-6	Replaced in its entirety Reason: Updated analysis methodology
3H-10	Table 3H.2-7	Replaced in its entirety Reason: Updated analysis methodology
3H-11	Table 3H.2-8	Replaced in its entirety Reason: Updated analysis methodology
3H-12	Table 3H.2.11	Deleted in its entirety Reason: Updated analysis methodology
3H-12	Table 3H.2-12	Deleted in its entirety Reason: Updated analysis methodology
3H-13	Table 3H.2-13	Deleted in its entirety Reason: Updated analysis methodology
3H-15	Table 3H.2-15	Deleted in its entirety Reason: Updated analysis methodology
3H-25	Table 3H.3-10	Deleted in its entirety Reason: Updated analysis methodology
3H-33	Figure 3H.2-2 Sheet 1 of 4	Deleted in its entirety Reason: Updated analysis methodology
3H-34	Figure 3H.2-2 Sheet 2 of 4	Deleted in its entirety Reason: Updated analysis methodology
3H-35	Figure 3H.2-2 Sheet 3 of 4	Deleted in its entirety Reason: Updated analysis methodology

Page	Location (e.g., subsection with paragraph/ sentence/ item, table with row/column, or figure)	Description of Change
3H-36	Figure 3H.2-2 Sheet 4 of 4	Deleted in its entirety Reason: Updated analysis methodology
3H-37	Figure 3H.2-3	Deleted in its entirety Reason: Updated analysis methodology
3H-38	Figure 3H.2-4	Deleted in its entirety Reason: Updated analysis methodology
3K-76 to 81	Table 3K-4 Sheets 1-6 Items 13-48, 63-69, and 75-86 Last Column	Add “2” to the last column. Reason: Provided explanation for why cables are excluded. [RAI 579-4481, Question 03.04.01-22]
3K-82	Table 3K-4 Sheet 7 Notes	Add new note “2. The electrical interconnections (e.g., cables) servicing components are excluded as SSCs requiring protection against internal flooding, because the cables in PS/B are located above the internal flooding level and maintain their function in case of any internal flooding.” Reason: Provided explanation for why cables are excluded. [RAI 579-4481, Question 03.04.01-22]

3.13.2 Inservice Inspection Requirements 3.13-11
3.13.3 Combined License Information.....3.13-12
3.13.4 References 3.13-13

APPENDICES

Appendix 3A Heating, Ventilation, and Air Conditioning Ducts and Duct Supports 3A-1

Appendix 3B Bounding Analysis Curve Development for Leak Before Break Evaluation of High-Energy Piping for US-APWR.....3B-1

Appendix 3C Reactor Coolant Loop Analysis Methods 3C-1

Appendix 3D US-APWR Equipment Qualification List Safety and Important to Safety Electrical and Mechanical Equipment..... 3D-1

Appendix 3E High Energy and Moderate Energy Piping in the Prestressed Concrete Containment Vessel and Reactor Building.....3E-1

Appendix 3F Design of Conduit and Conduit Supports 3F-1

Appendix 3G Seismic Qualification of Cable Trays and Supports 3G-1

Appendix 3H Model Properties and Seismic Analysis Results for Lump Mass Stick Models of R/B-PCCV-Containment Internal Structure on a Common Basemat~~, PS/Bs on Individual Basemats~~..... 3H-1

Appendix 3I In-Structure Response Spectra 3I-1

Appendix 3J Reactor, Power Source and Containment Internal Structural Design..... 3J-1

Appendix 3K Components Protected from Internal Flooding…….....3K-1

TABLES

Page

Table 3.2-1 Non-Safety Components Required for Normal Shutdown 3.2-15
Table 3.2-2 Classification of Mechanical and Fluid Systems, Components, and Equipment 3.2-17
Table 3.2-3 Comparison of Various Requirements to Equipment Class 3.2-74
Table 3.2-4 Seismic Classification of Buildings and Structures 3.2-75
Table 3.6-1 High and Moderate Energy Fluid Systems 3.6-37
Table 3.7.1-1 CSDRS Horizontal Acceleration Values and Control Points 3.7-65
Table 3.7.1-2 CSDRS Vertical Acceleration Values and Control Points 3.7-66
Table 3.7.1-3 Major Dimensions of Seismic Category I Structures 3.7-67
Table 3.7.1-4 Comparison of 5% Damping ARS of Artificial Time Histories with 5% Damping CSDRS 3.7-68
Table 3.7.1-5 Duration of Motion of US-APWR ~~Artificial~~ Time Histories with Respect to Arias Intensity 3.7-69
Table 3.7.1-6 Generic Soil Profile Categories 3.7-69
Table 3.7.2-1 Summary of Dynamic Analysis and Combination Techniques 3.7-70
Table 3.7.2-2 Concrete Material Constants 3.7-71
Table 3.7.2-3 Seismic SSI Analysis Cases 3.7-72
Table 3.7.3-1(a) SSE Damping Values 3.7-73
Table 3.7.3-1(b) OBE Damping Values 3.7-73
Table 3.8.1-1 US-APWR PCCV Basic Design Specification 3.8-85
Table 3.8.1-2 PCCV Load Combinations and Load Factors 3.8-86
Table 3.8.1-3 Temperature Gradients of the R/B and PCCV 3.8-87
Table 3.8.1-4 Summary of PCCV Models and Analysis Methods 3.8-89
Table 3.8.3-1 Type of Construction and Dead Weight of Floor Sections 3.8-90
Table 3.8.3-2 Design Pressures within Containment Internal Structure 3.8-91
Table 3.8.3-3 Summary of Containment Internal Structure Models and Analysis Methods 3.8-92
Table 3.8.3-4 Axial, Shear and Flexural Stiffness of SC Module Walls 3.8-93
Table 3.8.3-5 Definition of Critical Locations and Thicknesses for Containment Internal Structure 3.8-94
Table 3.8.3-6 Critical Portions of the SC Modules 3.8-95
Table 3.8.4-1 Design Temperatures for Thermal Gradient R/B 3.8-96
Table 3.8.4-2 Temperature Gradients of the PS/Bs 3.8-97

Figures

Page

Figure 3.6-1 Break Exclusion Region- Main Steam Pipe Room 3.6-38
Figure 3.6-2 Characteristics of Discharging Jets 3.6-39
Figure 3.6-3 Typical Rupture Restraints 3.6-40
Figure 3.6-4 LBB Evaluation Procedure of the US-APWR..... 3.6-41
Figure 3.7.1-1 US–APWR Horizontal CSDRS 3.7-75
Figure 3.7.1-2 US–APWR Vertical CSDRS 3.7-76
Figure 3.7.1-3 Acceleration, Velocity, and Displacement Time History for Component H1 ~~Artificial Time Histories Plots (H1)~~..... 3.7-77
Figure 3.7.1-4 Acceleration, Velocity, and Displacement Time History for Component H2 ~~Artificial Time Histories Plots (H2)~~..... 3.7-78
Figure 3.7.1-5 Acceleration, Velocity, and Displacement Time History for Component V ~~Artificial Time Histories Plots (V)~~ 3.7-79
Figure 3.7.1-6 5% Damped ~~Artificial~~ Time History Response Spectra (H1)..... 3.7-80
Figure 3.7.1-7 5% Damped ~~Artificial~~ Time History Response Spectra (H2)..... 3.7-81
Figure 3.7.1-8 5% Damped ~~Artificial~~ Time History Response Spectra (V)..... 3.7-82
Figure 3.7.2-1 FE Model of PCCV 3.7-83
Figure 3.7.2-2 Containment Internal Structure FE Model 3.7-84
Figure 3.7.2-3 FE Model of R/B on Common Basemat..... 3.7-85
Figure 3.7.2-4 FE Model of R/B on Common Basemat..... 3.7-86
Figure 3.7.2-5 Method to Compute Weight and Inertia Moment of Lumped Masses 3.7-87
Figure 3.7.2-6 Method to Compute Section Area, Inertia Moment and Axial Area by Hand Calculations..... 3.7-88
Figure 3.7.2-7 Method to Calculate Equivalent Shear Area..... 3.7-89
Figure 3.7.2-8 Method to Evaluate Vertical Stiffness of PCCV Dome 3.7-90
Figure 3.7.2-9 Fixed-Base FE Model of R/B 3.7-91
Figure 3.7.2-10 Fixed-Base FE Model of Containment Internal Structure 3.7-92
Figure 3.7.2-11 Development of Enveloped Design ISRS 3.7-93
Figure 3.7.2-12 Example Design ISRS 3.7-94
Figure 3.8.1-1 Configuration of PCCV 3.8-115
Figure 3.8.1-2 PCCV Schematic Reinforcing and Tendons..... 3.8-118
Figure 3.8.1-3 Cylinder Liner Anchorage System 3.8-119
Figure 3.8.1-4 Liner Anchorage System for the Upper Portion of Dome 3.8-120

These SSCs are adequately protected against dynamic effects, including the effects of missiles, pipe whipping, and discharging fluids, that may result from equipment failures and from events and conditions outside the nuclear power plant. Details of the design, environmental testing, and construction/fabrication of safety-related SSCs are provided in Chapters 3, 5, 6, 7, 8, 9, and 10. The leak-before-break (LBB) evaluation of Section 3.6 identifies the design requirements for the piping that is excluded from consideration of pipe rupture due to dynamic effects from postulated pipe failure accidents.

3.1.1.5 Criterion 5 – Sharing of Structures, Systems, and Components

> Structures, systems, and components important to safety shall not be shared among nuclear power units unless it can be shown that such sharing will not significantly impair their ability to perform their safety functions, including, in the event of an accident in one unit, an orderly shutdown and cooldown of the remaining unit.

3.1.1.5.1 Discussion

This ~~design control document~~ Design Control Document (DCD) focuses on the US-APWR as a single plant. Safety-related SSCs are not shared with other units/plants including other US-APWR unit(s).

3.1.2 Protection by Multiple Fission Product Barriers

3.1.2.5 Criterion 10 – Reactor Design

> The reactor core and associated coolant, control, and protection systems shall be designed with appropriate margin to assure that specified acceptable fuel design limits are not exceeded during any condition of normal operation, including the effects of anticipated operational occurrences.

3.1.2.5.1 Discussion

The reactor core and associated coolant, control, and protection systems are designed to the following criteria (anticipated operational occurrences [AOOs] for events occurring one or more times in a plant lifetime, and postulated accidents/occurrences that are not expected to occur:

- No fuel damage will occur during normal core operation or operational transients or any transient conditions that may occur one or more times in a plant lifetime (AOOs). Fuel damage, as used here, is defined as penetration of the fission product barrier (i.e., the fuel rod cladding). The small number of clad defects that may occur is within the capability of the plant cleanup system and is consistent with the plant design bases (see Section 11.1). The reactor can be returned to a safe-shutdown state following an anticipated operational occurrence with only a small fraction of the fuel rods damaged, although there might be sufficient fuel damage to preclude the immediate resumption of operation.

withstand the effects of earthquakes without loss of capability to perform their safety function; and those site-specific, safety-related fluid systems or portions thereof; as well as the applicable industry codes and standards for pressure-retaining components.

The seismic category of safety-related and important to safety electrical, mechanical, and instrumentation and control (I&C) equipment is provided in Appendix 3D.

3.2.1.3 Classification of Building Structures

Table 3.2-4 provides the designated seismic category of building and structures (seismic category I, II, and NS). The US-APWR Nuclear Island consists of the R/B, PCCV, containment internal structure, A/B, access building (AC/B), and east and west power source buildings (PS/Bs). The US-APWR design includes the R/B, PCCV, containment internal structure, and PS/B (east and west). The turbine building (T/B) is part of the standard design but outside the Nuclear Island. Unique non-standard buildings and structures in Table 3.2-4 include the UHSRS, ESWPT, PSFSV, NS T/G Pedestal, and NS Outside Buildings. Minor NS Buildings and all structures in the plant yard are generally not listed in Table 3.2-4. Design of all plant buildings and structures are addressed where appropriate in Chapter 3 and its appendices.

3.2.2 System Quality Group Classification

GDC 1 of 10 CFR 50, Appendix A (Reference 3.2-4), and 10 CFR 50.55a (Reference 3.2-12), as they relate to safety-related SSCs, requires that SSCs be designed, fabricated, erected, constructed, tested, and inspected to quality standards commensurate with the importance of the safety function to be performed. RG 1.26 (Reference 3.2-13) is used to meet these requirements by classifying safety-related fluid systems and components and applying corresponding quality codes and standards to such systems and components.

Safety-related fluid systems may perform any of the following functions:

- Fission product containment
- Core cooling
- Reactor shutdown
- Reactivity control
- Post-accident containment heat removal
- Post-accident containment atmosphere cleanup
- Post-accident fission product removal
- Residual heat removal from the reactor and/or from the spent fuel storage pool
- Containment of radioactive materials

Portions of fluid systems which provide cooling or heating, sealing, lubrication, fuel, motive power, isolation, flood protection, or leakage detection necessary to support the accomplishment of any of the above functions are also considered safety-related.

Table 3.2-2 Classification of Mechanical and Fluid Systems, Components, and Equipment (Sheet 7 of 57)

System and Components	Equipment Class	Location	Quality Group	10 CFR 50 Appendix B (Reference 3.2-8)	Codes and Standards(3)	Seismic Category(4)	Notes
Letdown line piping and valves from and excluding the valve CVS-LCV-362 prior to regenerative heat exchanger to the following valves: Letdown line drain valve CVS-VLV-602 (including the valve) Residual Heat Removal System valves (2 each) (excluding the valves) RHS-AOV-024~~A,D~~ B,C Containment isolation valve (excluding the valve) CVS-AOV-005 Letdown line relief valve CVS-SRV-002 (including the valve) Letdown heat exchanger tube side drain valve CVS-VLV-606 (including the valve)	3	PCCV	C	YES	3	I	
Chemical and volume control system containment isolation valves and piping between the valves.	2	PCCV R/B	B	YES	2	I	
Excess letdown piping and valves from reactor coolant system to and including valve CVS-AOV-222 just prior to excess letdown heat exchanger.	1	PCCV	A	YES	1	I	

Table 3.2-2 Classification of Mechanical and Fluid Systems, Components, and Equipment (Sheet 18 of 57)

System and Components	Equipment Class	Location	Quality Group	10 CFR 50 Appendix B (Reference 3.2-8)	Codes and Standards(3)	Seismic Category(4)	Notes
Water supply piping and valves from emergency feedwater pits to spent fuel pit up to and including EFS-VLV-031	3	R/B	C	YES	3	I	
Emergency feedwater supply piping to spent fuel pit between and excluding EFS-VLV-031 and SFS-VLV-023	4	R/B	D	N/A	5	NS	
Turbine driven emergency feedwater pump steam supply piping and valves from and excluding EFS-MOV-101A,B,C,D to the pumps	3	R/B	C	YES	3	I	
Turbine driven emergency feedwater pump steam supply piping drain piping and valves up to and including EFS-VLV-109A,~~B~~D	3	R/B	C	YES	3	I	
Turbine driven emergency feedwater pump steam supply piping warming piping and valves	3	R/B	C	YES	3	I	
Turbine driven emergency feedwater pump steam supply piping drain piping and valves up to and including EFS-VLV-117A,B, 114A,B, 111A,B, LCV-076, 077, 078, 086, 087, 088	3	R/B	C	YES	3	I	
Turbine driven emergency feedwater pump steam supply piping drain piping and valves downstream and excluding EFS-VLV-117A,B,114A,B, 111A,B, LCV-076, 077, 078, 086, 087, 088	4	R/B	D	N/A	4	NS	

Table 3.2-2 Classification of Mechanical and Fluid Systems, Components, and Equipment (Sheet 32 of 57)

System and Components	Equipment Class	Location	Quality Group	10 CFR 50 Appendix B (Reference 3.2-8)	Codes and Standards(3)	Seismic Category(4)	Notes
Essential service water pump discharge ~~outlet~~ strainers, including essential service water supply piping and valves	3	UHSRS ESWPT	C	YES	3	I	
Essential service water system strainer blowdown piping and valves and vent piping and valves ~~Component cooling water heat exchanger inlet strainers, including essential service water supply piping and valves~~	3	R/B	C	YES	3	I	
Essential service water supply header piping and valves	3	UHSRS ESWPT	C	YES	3	I	
Essential service water return header piping and valves	3	UHSRS ESWPT	C	YES	3	I	
Essential service water supply line piping and valves to component cooling water heat exchangers, including component cooling water heat exchanger backwash piping	3	R/B ESWPT	C	YES	3	I	
Essential service water return line piping and valves from component cooling water heat exchangers	3	R/B ESWPT	C	YES	3	I	
Essential service water supply line piping and valves to essential chiller units	3	PS/B ESWPT	C	YES	3	I	
Essential service water return line piping and valves from essential chiller units	3	PS/B ESWPT	C	YES	3	I	
Essential service water pump motor cooling piping and valves	3	ESWPT	C	YES	3	I	

DCD_09.01.05-18
DCD_09.01.05-19

Table 3.2-2 Classification of Mechanical and Fluid Systems, Components, and Equipment (Sheet 41 of 57)

System and Components	Equipment Class	Location	Quality Group	10 CFR 50 Appendix B (Reference 3.2-8)	Codes and Standards(3)	Seismic Category(4)	Notes
Combustion air intake equipment	3	PS/B	C	YES	5	I	
Exhaust equipment	3	PS/B	C	YES	5	I	
Piping and valves	3	PS/B	C	YES	3	I	
28. Fuel Handling and Refueling System							
Refueling machine	~~4~~5	~~R/B~~ PCCV	~~D~~ N/A	N/A	5	II	
Fuel handling machine	~~4~~5	R/B	~~D~~ N/A	N/A	5	II	
Spent fuel assembly handling tool	5	R/B	N/A	N/A	5	NS	
New fuel storage rack	3	R/B	C	YES	5	I	
Spent fuel storage rack	3	R/B	C	YES	5	I	
Fuel transfer tube	2	PCCV, R/B	B	YES	2	I	
Spent fuel Pit	3	R/B	C	YES	5	I	
New fuel pit	3	R/B	C	YES	5	I	
Fuel transfer canal	3	R/B	C	YES	5	I	
Cask pit	3	R/B	C	YES	5	I	
Cask washdown pit	3	R/B	C	YES	5	I	
Spent fuel pit gates	3	R/B	C	YES	5	I	
Fuel inspection pit	3	R/B	C	YES	5	I	
Fuel transfer system	~~4~~5	PCCV, R/B	~~D~~ N/A	N/A	5	II	
Suspension hoist and aux. hoist on spent fuel cask handling crane	~~4~~5	R/B	~~D~~ N/A	N/A	5	II	
New fuel elevator	~~4~~5	R/B	~~D~~ N/A	N/A	5	II	
Containment rack	~~4~~5	PCCV	~~D~~ N/A	N/A	5	II	
New fuel assembly handling tool	5	R/B	N/A	N/A	5	NS	
Rod control cluster handling tool	5	R/B	N/A	N/A	5	NS	
Thimble plug handling tool	5	R/B	N/A	N/A	5	NS	
Burnable poison rod assembly handling tool	5	R/B	N/A	N/A	5	NS	
Control rod drive shaft handling tool	5	R/B	N/A	N/A	5	NS	
29. Containment System							
Containment vessel	2	PCCV	B	YES	2	I	
Equipment hatch	2	PCCV	B	YES	2	I	

Table 3.2-2 Classification of Mechanical and Fluid Systems, Components, and Equipment (Sheet 42 of 57)

System and Components	Equipment Class	Location	Quality Group	10 CFR 50 Appendix B (Reference 3.2-8)	Codes and Standards(3)	Seismic Category(4)	Notes
Personnel hatch	2	PCCV	B	YES	2	I	
30. Miscellaneous Plant Equipment							
PCCV polar crane	~~4~~5	PCCV	~~D~~ N/A	N/A	5	II	The main and auxiliary hoist of the polar crane, the main hoist of the spent fuel cask handling crane and the equipment hatch hoist are designed in accordance with ASME NOG-1 and NUREG-0554 as Type I single-failure-proof cranes. ~~These single-failure-proof cranes are designed in accordance with NUREG-0554 to maintain their position and hold their loads during an SSE.~~
Spent fuel cask handling crane	~~4~~5	R/B	~~D~~ N/A	N/A	5	II	
Equipment hatch hoist ~~(Deleted)~~	5	PCCV	N/A	N/A	5	II	
Miscellaneous cranes and hoists in reactor building	~~4~~5 or 10	R/B	~~D or~~ N/A	N/A	5	II or NS	
Miscellaneous hoists in power source buildings	5	PS/B	N/A	N/A	5	II	
Crane for SWDS in auxiliary building	~~6~~5	A/B	N/A	N/A	5	~~Note 1~~ NS	
31. Containment Purge System							
Containment high volume purge air handling unit	10	R/B	N/A	N/A	5	NS	
Containment high volume purge air handling unit fan	10	R/B	N/A	N/A	5	NS	
Containment high volume purge air handling unit cooling coil	10	R/B	N/A	N/A	5	NS	
Containment high volume purge air handling unit electric heating coil	10	R/B	N/A	N/A	5	NS	

Table 3.2-2 Classification of Mechanical and Fluid Systems, Components, and Equipment (Sheet 54 of 57)

System and Components	Equipment Class	Location	Quality Group	10 CFR 50 Appendix B (Reference 3.2-8)	Codes and Standards(3)	Seismic Category(4)	Notes
Essential chilled water chemical feed tank supply and return line piping and between and excluding the valves VWS-VLV0271A,B,C,D and VWS-VLV-274A,B,C,D	5	PS/B	N/A	N/A	4	II	
Piping from essential chilled water compression tank to and including the valves VWS-SRV-253A,B,C,D and VWS-VLV-254A,B,C,D	3	PS/B	C	YES	3	I	
46. Non-Essential Chilled Water System							
Non-essential chiller units Evaporator side Condenser side	 9 9	 A/B A/B	 N/A N/A	 N/A N/A	 5 5	 NS NS	
Non-essential chilled water pumps	9	A/B	N/A	N/A	5	NS	
Non-essential chilled water compression tanks	9	A/B	N/A	N/A	5	NS	
Non-essential chilled water system cooling towers	9	A/B	N/A	N/A	5	NS	
Non-essential chilled water system condenser water pumps	9	A/B	N/A	N/A	5	NS	
Non-essential chilled water chemical feed tank	10	A/B	N/A	N/A	5	NS	
Piping and valves (except portion of the containment penetration)	9	PCCV R/B A/B PS/B T/B	N/A	N/A	5	NS	Piping and valves within areas containing safety-related equipment are designed as seismic Category II.
(Deleted)							
Piping and valves between and including the containment isolation valves VWS-MOV-403 and 421, VWS-MOV-422, VLV-423 and 407	2	PCCV R/B	B	YES	2	I	

DCD_09.02.02-70

Table 3.2-2 Classification of Mechanical and Fluid Systems, Components, and Equipment (Sheet 55 of 57)

System and Components	Equipment Class	Location	Quality Group	10 CFR 50 Appendix B (Reference 3.2-8)	Codes and Standards(3)	Seismic Category(4)	Notes
Valves VWS-MOV-424,425~~,426~~	3	R/B	C	YES	5	I	
Non-essential chilled water chemical feed tank supply and return line piping and valves between VWS-VLV-571 and VWS-VLV-574	10	A/B	N/A	N/A	5	NS	
47. Containment Hydrogen Control System							
Igniters	4	PCCV	D	N/A	5	II	
48. Radiation monitoring system							
Piping and valves between and including the containment isolation valves	2	PCCV R/B	B	YES	2	I	
49. Condensate Storage and Transfer System							
Condensate storage tank	8	O/B	D	N/A	4	NS	
The components downstream condensate storage tank	8	O/B T/B	D	N/A	4	NS	
50. Turbine Component Cooling Water System							
All system components	8	T/B	D	N/A	4	NS	
51. Non-Essential Service Water System							
All system components	9	T/B	N/A	N/A	5	NS	
52. Secondary Sampling System (SSS)							
Secondary sampling system all components	8	T/B	D	N/A	4	NS	

Table 3.2-4 Seismic Classification of Buildings and Structures[1]

Structure	Acronym	Seismic Category[2]
Reactor Building[3]	R/B	I
Prestressed Concrete Containment Vessel[3]	PCCV	I
Containment Internal Structure[3]		I
Power Source Building (East and West)[3]	PS/B	I
Power Source Fuel Storage Vault	PSFSV	I
Essential Service Water Pipe Tunnel (ESWPT) (from/to UHS)[5]	ESWPT	I
UHS Related Structures[4]	UHSRS	I
A/B[3]	A/B	II
Turbine Building	T/B	II
AC/B[3]	AC/B	NS
Outside Building (e.g., maintenance facility, operations office)	O/B	NS
Turbine generator pedestal	T/G Pedestal	NS

Notes:

1. Other non-standard plant building structures, such as minor NS buildings and structures in the plant yard, are not listed in the above table and are not considered part of the US-APWR Nuclear Island.
2. Seismic category I (I)
   Seismic category II (II)
   Non-Seismic (NS)
3. US-APWR Nuclear Island
4. UHSRS include but are not limited to (1) dams, (2) ponds, or (3) cooling towers (including cooling tower enclosure, and pump house). The specific features of the UHSRS are site dependent and not part of the US-APWR standard plant. The UHSRS are seismic category I structures selected based on site-specific conditions and site-specific meteorological data.
5. The ESWPT is a site-specific structure, but the existence and functions are required by the plant standard design. The specific features of the ESWPT are site dependent and will depend on the type of UHS.

the effective tornado wind pressure load on the building. This ensures that there is no overall failure of the T/B, due to maximum tornado wind and/or atmospheric pressure change as defined in Table 2.0-1, which could affect the ability of adjacent buildings and structures to perform their intended safety functions. Localized failures of wind girts and other exposed SSCs are permitted. However, these items are designed to remain attached to the structure. ~~Alternately, if such~~ Any items (including the T/B siding) which might ~~could~~ become dislodged and become missiles under the maximum tornado conditions do ~~, they are reviewed to ensure that no new missiles are generated that are~~ not warrant further evaluation because they are considered to be enveloped by the missiles addressed in Subsection 3.5.1.4. The use of the tornado-generated missile spectrum described in Subsection 3.5.1.4, which is consistent with the most severe missile spectrum as identified for Region I in RG 1.76, Revision 1, provides assurance that the necessary SSCs will be available to mitigate the potential effects of a tornado on plant safety.

The AC/B is not designed for a tornado and consequently it could potentially fail due to design basis tornado loading~~, including loss of its siding~~. However, since its location is sufficiently far away from seismic category I structures, and adjacent safety-related SSCs buried in the plant yard, the collapse of the AC/B would not impact any adjacent safety-related SSCs. The AC/B may also have localized failure due to tornado loading; however, the design precludes the generation of missiles that are not bounded by Subsection 3.5.1.4. The locations of any safety-related SSCs in the plant yard adjacent to the AC/B, including those which may be field routed, are reviewed prior to installation to ensure that their distances away from the AC/B and/or burial depths are sufficient to prevent potential failure effects that could jeopardize their function and integrity. Therefore, the ability of other SSCs to perform their intended safety functions is not affected by the potential collapse or localized failure of the AC/B due to tornado loading.

It is the responsibility of the COL Applicant to assure that site-specific structures and components not designed for tornado loads will not impact either the function or integrity of adjacent safety-related SSCs, or generate missiles having more severe effects than those discussed in Subsection 3.5.1.4. Where required by the results of investigations, structural reinforcement and/or missile barriers are implemented so as not to jeopardize safety-related SSCs.

3.3.3 Combined License Information

COL 3.3(1) *The COL Applicant is responsible for verifying the site-specific basic wind speed is enveloped by the determinations in this section.*

COL 3.3(2) *These requirements also apply to seismic category I structures provided by the COL Applicant. Similarly, it is the responsibility of the COL Applicant to establish the methods for qualification of tornado effects to preclude damage to safety-related SSCs.*

COL 3.3(3) *It is the responsibility of the COL Applicant to assure that site-specific structures and components not designed for tornado loads will not impact either the function or integrity of adjacent safety-related SSCs, or generate*

resistance, and (3) a small rigid missile of a size sufficient to pass through any opening in protective barriers.

Therefore, the spectrum of tornado missiles is as follows:

- A 4,000 pound automobile, 16.4 ft by 6.6 ft by 4.3 ft, impacting the structure at normal incidence with a horizontal velocity of 135 ft/s or a vertical velocity of 90.5 ft/s. This missile is considered to potentially impact at all plant elevations up to 30 ft above grade for all grades within 0.5 mile of the plant structures.
- A 6.625 inch diameter by 15 ft long schedule 40 pipe, weighing 287 pounds, impacting the structure end-on at normal incidence with a horizontal velocity of 135 ft/s or a vertical velocity of 90.5 ft/s.
- A 1 inch diameter solid steel sphere assumed to impinge upon barrier openings in the most damaging direction with a horizontal velocity of 26 ft/s or a vertical velocity of 17.4 ft/s ~~in any direction~~.

Openings through the exterior walls of the seismic Category I structures, and the location of equipment in the vicinity of such openings, are arranged so that a missile passing through the opening would not prevent the safe shutdown of the plant and would not result in an offsite release exceeding the limits defined in 10 CFR 100 (Reference 3.5-2). Otherwise, structural barriers are designed to resist tornado missiles in accordance with the design procedures discussed in Subsection 3.5.3. Tornado missiles are not postulated to ricochet or strike more than once at a target location. Tornado missile protection is provided to resist the normal component of force delivered by the missile striking in any direction. Due to the robustness of the exterior wall design, all seismic Category I structures are capable of withstanding the impact of each identified tornado missile at any elevation, including the potential impact of a 4,000 pound automobile greater than 30 feet above grade.

3.5.1.5 Site Proximity Missiles (Except Aircraft)

Externally initiated missiles considered for the US-APWR standard design are based on tornado missiles as described in Subsection 3.5.1.4. As described in DCD, Section 2.2, the COL Applicant is to establish the presence of potential hazards, except aircraft, which is reviewed in Subsection 3.5.1.6, and the effects of potential accidents in the vicinity of the site. The RG followed is identified, and any deviations from this guidance or any alternative methods that are used are explained or justified. The information also describes the data collected, analyses performed, results obtained, and any previous analyses and results cited to justify any of the conclusions. Additional analyses may be required to evaluate other potential site-specific missiles.

3.5.1.6 Aircraft Hazards

The US-APWR standard plant design basis is that the plant is located such that an aircraft crash and air transportation accidents are not required to be considered as part of the design basis. It is the responsibility of the COL Applicant to verify the site interface parameters with respect to aircraft crashes and air transportation accidents as described in Section 2.2. Additional analyses may be required to evaluate potential aircraft missiles.

The site-independent CSDRS that are employed for the seismic category I design of the US-APWR standard plant are shown for 0.5%, 2%, 5%, 7%, and 10% damping values in Figures 3.7.1-1 and 3.7.1-2 for the horizontal and vertical components, respectively. The CSDRS are derived from RG 1.60 (Reference 3.7-6) spectra by scaling the spectra contained in RG 1.60 from 1.0 g to 0.3 g zero period acceleration (ZPA) values, and by modifying the RG 1.60 control points to broaden the spectra in the higher frequency range. The RG 1.60 spectral values are based on deterministic values for western United States earthquakes. However, recent seismic research including recently published attenuation relations indicates that earthquakes in the central and eastern United States have more energy content in the higher frequency range than earthquakes in the western United States. Thus, the RG 1.60 (Reference 3.7-6) spectra control points have been modified by shifting the control points at 9 Hz and 33 Hz to 12 Hz and 50 Hz, respectively, for both the horizontal and the vertical spectra. Therefore, for the US-APWR CSDRS, the horizontal spectra control points are at 0.25, 2.5, 12, and 50 Hz and the vertical response spectra control points are at 0.25, 3.5, 12, and 50 Hz. The modified RG 1.60 (Reference 3.7-6) spectra used for the CSDRS are expected to envelope many sites in the central and eastern United States in order to maximize the applicability of the US-APWR standard plant design; however, it is anticipated that there are some site-specific instances, particularly on hard rock sites in high seismic areas, where high-frequency exceedances of the CSDRS may occur. In these cases, the COL Applicant is required to perform site-specific seismic analyses, including a soil-structure interaction (SSI) analysis which may consider~~s~~ seismic wave transmission incoherence and analysis of the cumulative absolute velocity (CAV) of the seismic input motion, in order to determine if high-frequency exceedances of the CSDRS could be transmitted to SSCs in the plant superstructure with potentially damaging effects.

Consistent with RG 1.60 (Reference 3.7-6), the CSDRS representing the vertical accelerations is obtained by scaling the horizontal acceleration response spectra (ARS) by a factor of 2/3 for frequencies less than 0.25 Hz. The scaling factor that varies from 2/3 to 1.0 is applied for the frequency range between 0.25 and 3.5 Hz. The horizontal and vertical acceleration spectra are kept identical above frequency 3.5 Hz and, consequently, the vertical PGA is taken as the same as the horizontal PGA.

The US-APWR design response spectral accelerations for each of the spectral control points are presented in Tables 3.7.1-1 and 3.7.1-2. The US-APWR site-independent CSDRS as defined herein meet the requirements of 10 CFR 50, Appendix S(IV)(a)(1)(i) (Reference 3.7-7), which require that the horizontal component of the SSE ground motion in the free-field at the basemat level of the structures must be an appropriate response spectra with a PGA of at least 0.1 g.

Site-Specific GMRS

In accordance with NUREG-0800, SRP 2.5.2 (Reference 3.7-8), the site-specific GMRS define the site-specific SSE through a horizontal and vertical response spectra of the free-field motion that is specified either on the ground surface or at an outcrop (real or hypothetical) of the uppermost in-situ competent material that will exist after excavation. The competent material is defined as having a shear-wave velocity of 1,000 ft/s or greater. Free-field ground motion is defined as the seismic motion of the ground that is not influenced by the presence of any basemats and structures.

Design Ground Motion Time History

As described in Technical Report MUAP-10001 (Reference 3.7-47), ~~O~~one set of three statistically independent time histories of seismic motion is synthesized ~~artificially~~ for use as the input motion in the earthquake response analysis of the US-APWR standard plant including the R/B, PCCV, containment internal structure, and PS/Bs. The three time histories are developed to represent the ground motion for the three orthogonal earthquake components, two horizontal ("H1" and "H2") and vertical ("V") following the requirements and conditions set in Section II of SRP 3.7.1 (Reference 3.7-10) for the development of a single set of time histories Option 1, Approach 2.

The three orthogonal directions may be alternately referred to within Section 3.7 using the following different designations:

H1 = Direction 1 = NS = Plant north-south= Global X-axis

H2 = Direction 2 = EW = Plant east-west = Global Y-axis

V = Direction 3 = Vertical = UD = Up-Down = Global Z-axis

Approach 2 is utilized with the objective of generating artificial acceleration time histories whose response spectra achieve approximately mean based fits to the target CSDRS presented in Figures 3.7.1-1 and 3.7.1-2. The average ratio of the ARS calculated from the artificial time histories to the corresponding target CSDRS is kept only slightly greater than one. The spectral acceleration ratio is calculated frequency by frequency.

The ~~artificial~~ time histories plots for the ground accelerations, velocity, and displacements in three orthogonal directions ("H1," "H2," and "V") are shown in Figures 3.7.1-3, 3.7.1-4, and 3.7.1-5, respectively. The time history plots of the ground acceleration, velocity, and displacement are shown together to demonstrate their non-stationary process.

Figures 3.7.1-6, 3.7.1-7, and 3.7.1-8 show the ARS of the US-APWR artificial time histories for 5% damping for the three orthogonal directions H1, H2, and V, respectively. The plots of the CSDRS, which are based on the modified RG 1.60 (Reference 3.7-6) response spectra as described in Subsection 3.7.1.1, are also included in the figure to demonstrate that the ARS of the synthesized ~~artificial~~ time histories envelope those of the CSDRS for 5% damping values. The figures demonstrate that the ~~artificial synthesixed~~ acceleration time histories do not have significant gaps in the Fourier amplitude spectra but are also not biased high with respect to the target CSDRS.

The three US-APWR artificial time histories are discussed further with respect to the requirements specified in NUREG-0800, SRP 3.7.1 (Reference 3.7-10) for Approach 2 in the following, steps (a) through (d):

(a) The US-APWR time histories have sufficiently small time increments (Δt =0.005 seconds) and a total duration of 22.005 seconds. The time history data records have a Nyquist frequency of $N_f = 1/(2\Delta t)$ =100 Hz, and meet the NUREG-0800 SRP 3.7.1 requirement of a total duration of at least 20 seconds. The time increment of 0.005 seconds is lower than the maximum time increment of 0.01 seconds permitted by SRP 3.7.1. The Nyquist frequency of 100 Hz is considered to be above the range of frequencies important for the design of the

US-APWR plant and assures that the seismic analysis capture the responses of SSCs in the high frequency range. This is particularly important for site-specific subgrade conditions where seismic category I structures are founded on a hard rock subgrade.~~The US-APWR artificial time histories have a sufficiently small time increments (Δt =0.005 seconds) and a total duration of 22.09 second. The total duration of the artificial time histories is increased by zero packing (addition of values of zero acceleration at the end of the time history records for the purpose of performing discrete Fourier analysis). The time history data records have a Nyquist frequency of $N_f = 1/(2\Delta t)$ =100 Hz, and meet the NUREG-0800, SRP 3.7.1 (Reference 3.7-10) requirement of a total duration of at least 20 seconds. The time increment of 0.005 sec is lower than the maximum time increment of 0.01 sec permitted by SRP 3.7.1. The Nyquist frequency value of 100 Hz is considered to be above the range of frequencies important for the design of the US-APWR plant that assures that the seismic analysis will capture the responses of SSCs in the high frequency range. This is particularly important for site-specific subgrade conditions where seismic category I structures are founded on a hard rock subgrade.~~

(b) The 5% damped ARS of the US-APWR time history components, shown in Figures 3.7.1-6, 3.7.1-7, and 3.7.1-8, are computed at 300 frequency points that are divided such that 100 frequency points are uniformly spaced over the log frequency scale from 0.1 Hz to 1 Hz, 1 Hz to 10 Hz, and 10 Hz to 100 Hz. Each ARS obtained from the three artificial ground motion time history components is compared with the target response spectra at each frequency computed in the frequency range from 0.1 Hz to 100 Hz.~~The 5% damped ARS of the US-APWR artificial time histories, shown in Figures 3.7.1-6, 3.7.1-7, and 3.7.1-8, are computed at 275 frequency points that are divided in three ranges: (a) 75 frequency points are uniformly spaced over the log frequency scale from 0.25 Hz to 1 Hz, (b) 100 frequency points are uniformly spaced over the log frequency scale from 1 Hz to 10 Hz, and (c) 100 frequency points are uniformly spaced over the log frequency scale from 10 Hz to 100 Hz. Each of the three ARS obtained from the three artificial ground motion time histories are compared with the target response spectra at each frequency computed in the frequency range of 0.25 Hz to 100 Hz.~~

(c) The 5% damped ARS computed for each of the three US-APWR time history components do not fall more than 10% below the corresponding CSDRS target response spectra at any particular frequency. In addition, within a frequency window no larger than ±10% centered at any frequency data point, none of the three ARS (H1, H2, and V) falls below its corresponding target CSDRS. Meeting the requirements of SRP 3.7.1 is confirmed by assuring that, for each of the spectra derived from the time history components, no more than nine adjacent frequency points fall below the CSDRS target response spectra for frequencies between 0.1 Hz and 100 Hz. This ensures that the response spectra resulting from the time history components do not fall below the corresponding target response spectra in large frequency windows. Table 3.7.1-4 demonstrates that these requirements are met by showing a summary of the frequency non-exceedances.~~The 5% damped ARS computed for each of the three US-APWR artificial time histories does not fall more than 10% below the corresponding CSDRS target response spectra at any particular frequency. In addition, within a frequency window no larger than ±10% centered at any frequency data point, none of the three ARS (H1, H2, and V) falls below their~~

~~corresponding target CSDRS. Some minor exceptions are noted and discussed below. Consistent with SRP 3.7.1 (Reference 3.7-10), this has been confirmed by assuring that, for the spectra derived from the artificial time histories, no more than nine frequency points adjacent to any one particular frequency point fall below the CSDRS target response spectra for any particular frequency being considered. This prevents the response spectra resulting from the artificial time histories from falling below the respective target response spectra in large frequency windows. Table 3.7.1-4 demonstrates that these requirements are met by showing a summary of the frequency non-exceedances.~~

~~For the H1 direction, there is a series totaling 10 consecutive data points (1 frequency data point + 9 adjacent points) centered at about 0.55 Hz that fall below the 100% value of the target spectra, however all data points in this particular window have values that are at least 98% of the target spectra and the window is no greater than ±10% of 0.55 Hz. Also, at 0.36 Hz, there is one data point that has a value which is 89.4% of the target spectra. For the H2 direction, there is a series totaling 10 consecutive data points centered at about 0.38 Hz that fall below the 100% value of the CSDRS, however, all data points in this particular window have values that are at least 90% of the target spectra except for one data point that is 88.8% of the target value, and the window is no greater than ±10% of 0.38 Hz. For the V (vertical) direction, there is a series totaling 5 consecutive data points centered at about 0.54 Hz that fall below the 100% value of the target spectra, however, all data points in this particular window have values that are at least 91% of the target spectra except for one data point that is 87.7% of the target value, and the window is no greater than ±10% of 0.54 Hz. All these non-exceedances are considered acceptable and consistent with the intent of SRP 3.7.1 (Reference 3.7-10), since they do not exceed a frequency window of ±10% centered on any particular frequency, there is not more than one data point in any particular window that is below 90% of the CSDRS, and the lowest value for any particular data point is 87.7%, which is a very minor non-exceedance. These non-exceedances also occur at very low frequencies that are not significant for the design of US-APWR standard plant SSCs. These non-exceedances would need to be considered if the CSDRS were used to design site-specific pipe tunnels or similar buried SSCs.~~

(d) In lieu of the power spectral density requirement of Option 1 Approach 1 in SRP 3.7.1, Approach 2 specifies that the computed 5% damped response spectra of each artificial ground motion time history component does not exceed its target response spectra at any frequency by more than 30% (a factor of 1.3) in the frequency range of interest. For the US-APWR, the response spectra derived from the time histories are checked to ensure that they do not exceed the corresponding target spectra (CSDRS) by more than 30% at any frequency range measured as described in item (b) above. The results of this check are presented in Table 3.7.1-4.~~In lieu of the power spectral density requirement of Approach 1 in NUREG-0800, SRP 3.7.1 (Reference 3.7-10), Approach 2 specifies that the computed 5% damped response spectra of each artificial ground motion time history does not exceed its target response spectra at any frequency by more than 30% (a factor of 1.3) in the frequency range of interest. For the US-APWR, the response spectra derived from the artificial time histories are checked to assure that they do not exceed the corresponding target spectra (CSDRS) by more than 30% at any frequency~~

~~range measured as described in item (b) above.~~ The results of this check are presented in Table 3.7.1-4.

The cross-correlation coefficients between the three components of the design time histories are as follows:

$$\rho_{12} = -0.0892\ \cancel{-0.0729},\ \rho_{23} = -0.0654\ \cancel{-0.0614},\ \text{and}\ \rho_{31} = -0.0836\ \cancel{-0.1289}$$

where 1, 2, and 3 are the three global directions corresponding to north-south, east-west, and vertical directions for the US-APWR standard plant.

Since the absolute values of the cross-correlation coefficients of the US-APWR ~~artificial~~ time histories are less than 0.16, as demonstrated above, in accordance with NUREG/CR-6728 (Reference 3.7-14), the time histories are considered statistically independent of each other.

Duration of Motion

Each time history of the set of three statistically independent time histories which are developed for design of the US-APWR seismic category I buildings has a strong duration of motion greater than 7 seconds ~~of 8.91 seconds~~ and a total duration of motion greater than 22 seconds ~~of 22.09 seconds~~. The strong duration of motion meets the acceptance criterion of 6 seconds minimum for strong motion duration as given in SRP 3.7.1 (Reference 3.7-10) for design time histories. The duration of motion has been determined using random phase characteristics. The total duration of motion meets the acceptance criterion of 20 seconds minimum as given in SRP 3.7.1 (Reference 3.7-10) design time histories, Option 1, Approach 2 Part (a).

For the linear structural analyses, which are based on the synthesized time histories presented in Technical Report MUAP-10001 (Reference 3.7-47) that are ~~and~~ used to design US-APWR standard plant seismic category I buildings and structures, the total duration of the ~~artificial~~ ground motion time histories has been demonstrated to be long enough such that adequate representation of the Fourier components at low frequency is included in the time history.

The corresponding stationary phase strong-motion duration is consistent with the longest duration of strong motion from the earthquakes defined in SRP 2.5.2 (Reference 3.7-8) at low and high frequency and as presented in NUREG/CR-6728 (Reference 3.7-14). The strong motion duration is defined as the time required for the Arias Intensity to rise from 5% to 75% in accordance with SRP 3.7.1 (Reference 3.7-10). The uniformity of the growth of this Arias Intensity has been examined and is acceptable. The duration of motion of the US-APWR artificial time histories with respect to the time duration needed to achieve 5% and 75% Arias intensities is summarized in Table 3.7.1-5.

The COL Applicant is to verify that the site-specific ratios V/A and AD/V^2 (A, V, D, are PGA, ground velocity, and ground displacement, respectively) are consistent with characteristic values for the magnitude and distance of the appropriate controlling events defining the site-specific uniform hazard response spectra. These parameters are examined to assure that they are consistent with the values determined for the low and high frequency events described in Appendix D of RG 1.208 (Reference 3.7-3).

The COL Applicant is to provide site-specific design ground motion time histories and durations of motion.

3.7.1.2 Percentage of Critical Damping Values

Damping coefficient values representing percentages of critical damping are assigned to the linear-elastic models to quantify the dissipation energy in the dynamic system. Table 3.7.3-1(a) presents the values of damping coefficients used for the SSE seismic analysis of seismic category I and II systems and subsystems. The specified damping coefficients are in accordance with RG 1.61 (Reference 3.7-15), and are based on consideration of the material, load conditions, and type of construction used in the structural system.

The values of the SSE damping coefficients specified in Table 3.7.3-1(a) are based on the expectation that the response of the linear elastic structure attributed to load combinations that include the SSE is close to applicable stress limits. This is considered acceptable for the US-APWR standard plant seismic design where, as described in RG 1.61 (Reference 3.7-15) Section 1.2, the design-basis ISRS represent the envelope of the in-structure responses obtained from multiple analyses conducted to consider a range of expected site soil conditions. However, this does not apply for the site-specific seismic analysis that use site-specific site properties since it is possible that the predicted structural response to the load combinations that include an SSE is significantly below the stress limits. In these cases, the SSE values in Table 3.7.3-1(a) may overestimate the actual dissipation of energy in the linear dynamic system and, thus, result in a non-conservative estimate of the structural response for frequencies close to the resonant frequencies. To prevent non-conservative results, the COL Applicant is to review the resulting level of seismic response and determine appropriate damping values for the site-specific calculations of ISRS that serve as input for the seismic analysis of seismic category I and seismic category II subsystems. In accordance with Section 1.2 of RG 1.61 (Reference 3.7-15), no verifications of seismic response are required if the lower damping values listed in Table 3.7.3-1(b) are used as input for computation of ISRS. In accordance with RG 1.61 (Reference 3.7-15), the damping values in Table 3.7.3-1(b) are also intended for use in site-specific OBE analyses, if the site-specific OBE is higher than 1/3 of the site-specific SSE.

The damping values in Table 3.7.3-1(a) and Table 3.7.3-1(b) are applicable to all modes of vibration of a structure constructed of the same material.

Generally, ~~T~~the damping values for systems that include two or more substructures, such as a concrete and steel composite structure, can be obtained using the strain energy method. The strain energy dependent modal damping values are computed based on Reference 3.7-18, which is the same as the stiffness weighted composite modal damping method, and acceptable to SRP 3.7.2 (Reference 3.7-16).

The stiffness weighted modal damping ratio h_i of the jth mode is obtained from the following equation:

$$h_j = \frac{\vec{\phi}_j^{\,T}\left[\overline{K}\right]\vec{\phi}_j}{\vec{\phi}_j^{\,T}\left[K\right]\vec{\phi}_j}$$

where

$[K]$ = the stiffness matrix of the combined soil-structure system

$\vec{\phi}_j$ = the jth normalized mode shape vector

$[\bar{K}] = \sum [k_i] \cdot \xi_i$ = the modified stiffness matrix constructed from the products of the element stiffness matrices $[k_i]$ and the applicable damping ratio ξ_i

The frequency domain SSI analyses of the R/B complex and the PS/Bs, discussed in Section 3.7.2.4, use complex damping formulation to represent the dissipation of energy in the combined dynamic system due to material damping. The global stiffness and damping of the dynamic system are represented by a global complex matrix that is assembled from the element complex matrices modeling the stiffness and material damping of different subsystems and/or structural components. ~~Formulation of damping values for the seismic analysis models which incorporate the combined soil-structure damping is discussed in Subsection 3.7.2.1.~~ Damping values associated with site-specific SSI analyses are addressed in Subsection 3.7.2.4.1.

3.7.1.3 Supporting Media for Seismic Category I Structures

A range of soil parameters of the basemat supporting media are considered in the seismic design of seismic category I building structures for the US-APWR standard plant. The overall basemat dimensions, basemat embedment depths, and maximum height of the US-APWR R/B, PCCV, and containment internal structure on their common basemat are given in Table 3.7.1-3 and as updated by the COL Applicant to include site-specific seismic category I structures.

The required allowable static bearing capacity for seismic category I building structure basemats, including the R/B-PCCV-containment internal structure on their common basemat, is 15 ksf. The dynamic bearing loads for seismic category I structure basemats are dependent upon the magnitude of the seismic loads that can be obtained from a site-specific seismic analysis that considers FIRS. The COL Applicant is to determine the allowable static and dynamic bearing capacities ~~capacity~~ based on site conditions, including the properties of fill concrete placed to provide a level surface for the bottom of foundation elevations, and to evaluate the bearing loads to these capacities ~~this capacity~~. A minimum factor of safety of 2 is suggested for the ultimate bearing capacity versus the allowable dynamic bearing capacity; however, a different value may be justified based on site-specific geotechnical conditions. A minimum factor of safety of 2.5 is suggested for the ultimate bearing capacity versus the allowable static bearing capacity; however, a different value may be justified based on site-specific geotechnical conditions.

The range of soil parameters in the site-independent seismic design includes use of basemat supporting media that are comprised of generic layered soil profiles. The profiles have been selected from an exhaustive suite of soil profiles that cover the entire range of generic site conditions from soft soil to firm rock that may exist across the central and eastern North America. The initial profile development recognized that for the softer conditions, the shallow materials would be either removed or improved for appropriate foundation conditions. From the exhaustive suite of candidate sites, a final subset of eight generic profiles representing strata consisting of soil and soft, medium, and hard rock was selected.

The profiles are presented in Table 3.7.1-6. The generic profiles are classified using $\overline{V_S}$ (30m), the average shear-wave velocity in the top 30 meters. This classification is

consistent with current practice for building codes and is a convenient metric with which to distinguish the profiles, prior to soil removal or improvement for installation of the power block. Strain-compatible properties consistent with the CSDRS input ground motion, including shear- and compression-wave velocities, corresponding hysteretic damping values, and Poisson ratios are developed for the profiles. Note that for purposes of development of compression-wave velocities, the profiles are analyzed in the saturated condition.

The resulting generic layered supporting media provide a wide variation of properties to address potential ranges in dynamic soil properties. The development of the supporting soil media profiles are described further in Sect ions 4.2 and 5.2 of Technical Report MUAP-10001 (Reference 3.7-47).~~The site-independent seismic design of seismic category I and seismic category II SSCs uses lumped parameter representation to model the interaction of seismic category I structures with the supporting media. The lumped parameter model considers a rigid basemat resting on the surface of a uniform elastic half-space. Six sets of two parameters, one for stiffness and one for damping, are developed in accordance with Subsection 3.3.4.2 of ASCE 4-98 (Reference 3.7-9) to represent the properties of the SSI in each one of the six degrees of freedom (DOFs) that describe the three-dimensional vibrations of the rigid basemat. The material properties of the soil used as input for the development of the lumped interaction parameters are the soil shear wave velocity, Poisson's ratio, and density. Since site-specific conditions (such as the material properties, depth, and the layering of the soil over the bedrock) are not known at the time of the site-independent analyses of the standard plant, a set of generic material properties is assigned to the uniform elastic half-space modeling the subgrade in order to simulate a wide range of possible supporting media conditions.~~

The site-specific SSI analyses will use site-dependent input control motion that is derived from GMRS and FIRS discussed in Subsection 3.7.1.1. The primary non-linear material behavior of the soil must be considered and may be approximated by using equivalent linear material properties that are compatible to the free-field strains generated by the site-specific design ground motion. If the earthquake-induced strains in the soil remain below 2%, the strain-compatible soil properties are obtained from a 1-dimensional wave propagation analysis by using equivalent-linear methodology and site-specific soil stiffness and damping degradation curves. The site-specific SSI analyses of the R/B–PCCV-containment internal structure on their common basemat uses the finite element (FE) analysis program SASSI Version 2.2 (Reference 3.7-17) that provides a frequency domain solution of the SSI model response by using a sub-structuring technique and, when applicable, is capable of addressing site-specific effects such as the layering of the soil, embedment and flexibility of the basemat, scattering, and incoherence of the input control motion. Based on successful comparison of ISRS derived from the CSDRS to those derived from site-specific SASSI analysis, other standard plant structures designed using lumped parameter models with lumped SSI parameters subject to the CSDRS can be validated by direct comparison to demonstrate their site-specific FIRS are enveloped. A SASSI analysis can be performed to consider incoherency to reduce high frequency response.

The site-independent SSI analyses include the subgrade as horizontally infinite layers resting on the surface of an elasto-viscous half-space, representing the stiffness, material, and radiation damping of geological hard rock stratum with shear wave velocity equal or greater than 9,200 ft/s. The soil material damping values used in conjunction with the shear and compression wave profiles in the SSI analysis models are identical.

The seismic models used in the SSI analyses are discussed further in Section 3.7.2.3. The site-independent SSI analyses are discussed further in Section 3.7.2.4, as well as the suggested methodologies for analyzing the effect of site-specific conditions on the SSI response. ~~The lumped parameter model and the input soil properties used for the site-independent SSI analysis of the US-APWR standard plant, as well as the suggested methodologies for analyzing the effect of site-specific conditions on SSI response, are discussed further in Subsection 3.7.2.4.~~

3.7.2 Seismic System Analysis

Seismic system analysis is discussed in the following Subsections, 3.7.2.1 through 3.7.2.15. Following the guidance of the acceptance criteria section II.3(a) of SRP 3.7.2 (Reference 3.7-16), two categories of seismic category I SSCs are defined: (1) seismic systems that include major seismic category I buildings and structures that are analyzed in conjunction with their basemats and supporting media (subgrade); and (2) seismic subsystems that include other seismic category I SSCs that are not analyzed in conjunction with basemats and subgrade. This subsection discusses the following major seismic category I and II buildings and structures that are classified as seismic systems requiring SSI analysis:

- R/B–PCCV-containment internal structure on their common basemat (seismic category I)
- East and west PS/Bs (seismic category I)
- A/B (seismic category II)
- T/B (seismic category II)

The seismic responses of the major seismic category I and seismic category II structures are required to be ~~is~~ obtained from frequency domain time history analysis of seismic models considering a frequency-dependent SSI system, including a set of eight generic layered soil profiles representing a wide range of site conditions ~~lumped mass stick models with frequency independent lumped parameters constants representing the stiffness and damping properties of the SSI~~. Subsections 3.7.2.1 and 3.7.2.3, respectively, describe the analysis and modeling methods used for the seismic analyses, and Subsection 3.7.2.2 discusses the natural frequencies and results obtained from the seismic analyses. The results from the seismic analyses serve as the basis for the development of equivalent static seismic loads that are applied in conjunction with other design loads on the detailed three-dimensional shell FE model in order to obtain the design stresses in the structural members and components.

The overall process for development of seismic loading is summarized for the R/B complex ~~can be summarized~~ as follows:

1. Develop shear forces, axial force, bending moments and torsional moment diagrams from the results of SSI analyses of each generic soil profile for maximum member forces and moments in the stick elements.

2. Develop equivalent horizontal loads F_{Hi} in NS and EW direction from the shear force diagrams for each floor elevation.

3. Develop equivalent vertical loads F_{Vi} from the axial force diagram for each floor elevation.

4. Develop equivalent floor rocking moment M_{Ri} in NS and EW direction from the bending moments diagrams for each floor elevation.

5. Develop equivalent floor torsional moment M_{Ti} from the torsional moments diagrams for each floor elevation.

6. Use the SRSS method to combine the seismic demands that are due to three components of the earthquake.

7. Envelope the SRSS seismic demands from the SSI analyses of the eight generic soil profiles.

8. Adjust the magnitude of the vertical load Fv to include the effect of the floor rocking using the following equation:

$$F'_V = [(F_v)^2 + (M_{NS}/L_{NS})^2 + (M_{EW}/L_{EW})^2]^{1/2}$$

where M_{NS} and M_{EW} are the floor rocking moments in NS and EW direction and the L_{NS} and L_{EW} are the NS and EW length of the floor. Note that this increase is applied to the vertical design SSE loads for the detailed finite element model in calculating demands on structural members.

9. Adjust the magnitude of the horizontal floor loads F_H to include the effect of the floor torsional response M_T as shown in the equations below.

$$F'_{NS} = F_{NS} + \frac{M_T}{L_{EW}} \qquad F'_{EW} = F_{EW} + \frac{M_T}{L_{NS}}$$

The design also includes the accidental torsion discussed in Subsection 3.7.2.11.

10. Conservative story seismic loads are selected based on F'_V, F'_{NS}, and F'_{EW}.

11. Determine the out-of-plane seismic loads on flexible slabs and walls based on results for maximum accelerations of single degree of freedom oscillators.

The overall process for development of seismic loading is summarized for the PS/Bs as follows:

The results obtained from the site-independent SSI analyses for maximum nodal accelerations serve as basis for development of the seismic loads used for the standard design of PS/B structural members. These seismic design loads are developed in the form of equivalent static accelerations as follows:

1. Calculate maximum accelerations in each of the 3 response directions due to each of the 3 direction input motions from the site-independent SSI analyses of PS/B.

2. Envelope the maximum nodal accelerations results obtained from the site-independent SSI analyses of eight generic site conditions.

3. Create nine (9) plots of the envelope maximum accelerations in three directions representing the response of the PS/B at particular floor elevation due to the three components of the earthquake.

4. Apply the SRSS rule to combine the enveloped nodal maximum accelerations due to the three directions of the earthquake and plot the SRSS of the maximum acceleration responses in the three directions.

5. Calculate weighted average accelerations at floor elevation "f" as follows:

$$A_i^f = \frac{\sum a_i^k \cdot w_k}{W_f}$$

where W_f is the total weight of the floor "f", W_k is the weight participating to node "k", A_i^f is the weighted average acceleration of floor "f" in "i" direction, and a_i^k is the maximum SRSS acceleration at node "k" in "i" direction.

6. Determine equivalent seismic demand at each floor elevation based on the maximum acceleration plots and the weighted average accelerations obtained from items 3, 4 and 5. The design also includes the accidental torsion discussed in Subsection 3.7.2.11.

7. Determine the out of plane seismic demands on slabs and walls with large unsupported areas based on the plots of the maximum acceleration plots obtained in step 4.

Calculate story shear diagram for the PS/B structure. The total shear at each floor elevation is obtained as the sum of the all nodal inertial forces at and above that elevation. The nodal inertial forces are the product of the nodal mass and the equivalent static acceleration acting on the node.

- ~~A set of time history analyses are performed on the lumped mass stick model with SSI lumped parameters constants representing different subgrade conditions. Two sets of analyses are performed where the time histories are applied to the model separately for each direction and simultaneously in all three orthogonal directions (north-south, east-west, and vertical). The responses obtained from the time history analyses with different subgrade conditions are enveloped.~~
- ~~The results of the time history analyses for the response accelerations are used to develop ISRS that define the input seismic loads for analysis and design of seismic category I and II subsystems housed within or mounted to the major seismic category I structures. The ARS are calculated for the response of the lumped mass stick model at representative locations. The envelope of the response accelerations due to the three components of the earthquake are combined using square root sum of the squares (SRSS) and broadened to develop ISRS as discussed further in Subsection 3.7.2.5. The development of ISRS addresses the effects of parameter variations as described in Subsection 3.7.2.9.~~
- ~~The results of maximum member forces obtained from the time history analyses serve as the basis for development of equivalent static seismic loads for design~~

~~of the structural members of major seismic category I and seismic category II buildings and structures. Diagrams of maximum shear and axial force are developed from the results of each time history analysis for the response in each orthogonal direction. Equivalent shear and axial forces as well as floor rocking and torsional moments are computed for each lumped mass node starting from the top nodes and progressing down to the base of the stick models.~~

- ~~After being corrected to consider accidental torsion, as described in Subsection 3.7.2.11, the seismic loads are applied to the detailed FE model to perform static analysis. The resulting loads (combined using Newmark 100%-40%-40% or SRSS method) are included in the loads and load combinations discussed in Section 3.8 and used to design structural members and components, as described in Section 3.8~~.

Discussed in Subsection 3.7.3 are the seismic analyses applicable to seismic category I civil structure subsystems housed within or supported by the major seismic category I structures. Seismic and dynamic qualification of mechanical and electrical equipment and subsystems performed by testing is discussed in Section 3.10 and Appendix 3D. Mechanical subsystems include mechanical equipment, piping, vessels, tanks, heat exchangers, valves, and instrumentation tubing and tubing supports. The seismic analysis of mechanical subsystems is addressed in Sections 3.9 and 3.12. The mass inertia properties of the major civil structural, mechanical, and all other seismic subsystems are accounted for in the seismic system analyses, as explained further in Subsection 3.7.2.3.

3.7.2.1 Seismic Analysis Methods

The methods used for the seismic analysis of the US-APWR seismic category I systems conform to the requirements of SRP Subsections 3.7.1 (Reference 3.7-10) and 3.7.2 (Reference 3.7-16). Table 3.7.2-1, as updated by the COL Applicant to include site-specific seismic category I structures, presents a summary of dynamic analysis and combination techniques including types of models and computer programs used, seismic analysis methods, and method of combination for the three directional components for the seismic analysis of the US-APWR standard plant seismic category I buildings and structures.

The seismic response of standard plant seismic category I and II structures is obtained from site-independent analyses performed using three-dimensional SSI models with the program ACS SASSI (Reference 3.7-17) which utilizes time history analysis in the frequency domain with the sub-structuring technique and complex stiffness representation of stiffness and damping properties of the structures and subgrade. The global complex stiffness matrix of the structure is assembled from the stiffness matrices of the finite elements. With the sub-structuring technique, impedance, load vector, and complex dynamic stiffness matrices are developed separately for the structure and the soil. The input ground motion is transformed into the frequency domain using Fast Fourier Transformation. The equations of motion for the complex SSI system are then developed by combining the equations of motion for the structure with those of the soil in the frequency domain. The seismic response is obtained in the frequency domain from solution of complex algebraic equations for a selected set of frequencies of analysis. The solutions obtained for the selected set of frequencies of analysis are then interpolated and transformed into the time domain using Inverse Fast Fourier Transformation. The entire process is described in Section 2 of the user's guide for ACS SASSI (Reference 3.7-17).

~~The seismic response of the major seismic category I and seismic category II structures of the US-APWR is obtained from site-independent analyses that use the direct integration time history method. Three-dimensional lumped mass stick models are used to represent the mass inertia, stiffness, and damping properties of the buildings, structures, and basemats. The stiffness and damping properties of the subgrade are modeled using the lumped parameter approach developed in accordance with Subsection 3.3.4.2 of ASCE 4-98 (Reference 3.7-9). The case when the seismic category I system is founded on hard rock is also considered by using stick models fixed at the base. The analyses of all of the systems are performed for three orthogonal (two horizontal and one vertical) components of site-independent design earthquake ground motion.~~

~~The response of a multi-DOF linear system subjected to seismic excitation is generally represented by the following differential equation of motion:~~

$$\cancel{[M]\,\ddot{\vec{x}} + [C]\,\dot{\vec{x}} + [K]\,\vec{x} = -[M]\,\vec{u}_b\,\ddot{u}_g} \qquad \text{(Eq. 3.7.2-1)}$$

~~where~~

~~$[M]$ = the (nxn) mass matrix of the dynamic system~~

~~$[C]$ = the (nxn) damping matrix of the dynamic system~~

~~$[K]$ = the (nxn) stiffness matrix of the dynamic system~~

~~$\vec{x}$ = the (nx1) column vector of relative displacements~~

~~$\dot{\vec{x}}$ = the (nx1) column vector of relative velocities~~

~~$\ddot{\vec{x}}$ = the (nx1) column vector of relative accelerations~~

~~$\vec{u}_b$ = the (nx1) influence vector; displacement vector of the structural system when the support undergoes a unit displacement in the direction of the earthquake motion~~

~~n = the number of dynamic DOF~~

~~$\ddot{u}_g$ = the ground acceleration~~

~~The mass matrix $[M]$ of the lumped mass stick model is diagonal. The size "n" of the matrices in the equation of motion (Equation 3.7.2-1) is equal to the total number of translational and rotational DOF with assigned mass inertia. If the six DOF assigned to the soil lumped SSI parameters are denoted with the suffix "c" and the rest of the DOF representing the response of the superstructure are denoted with suffix "s," the stiffness and damping matrices ($[K]$ and $[C]$) of the system can be expressed as follows:~~

$$\cancel{[K] = \begin{bmatrix} [K_{ss}] & [K_{sc}] \\ [K_{cs}] & [K_{cc}] + [K_c] \end{bmatrix} = \begin{bmatrix} [K_{ss}] & [K_{sc}] \\ [K_{cs}] & [K_{cc}] \end{bmatrix} + \begin{bmatrix} 0 & 0 \\ 0 & [K_c] \end{bmatrix}}$$

$$\cancel{[C] = \begin{bmatrix} [C_{ss}] & [C_{sc}] \\ [C_{cs}] & [C_{cc}] + [C_c] \end{bmatrix} = \begin{bmatrix} [C_{ss}] & [C_{sc}] \\ [C_{cs}] & [C_{cc}] \end{bmatrix} + \begin{bmatrix} 0 & 0 \\ 0 & [C_c] \end{bmatrix}} \qquad \text{(Eq. 3.7.2-2)}$$

where $[K_S]=\begin{bmatrix}[K_{ss}] & [K_{sc}]\\ [K_{cs}] & [K_{cc}]\end{bmatrix}$ and $[C_S]=\begin{bmatrix}[C_{ss}] & [C_{sc}]\\ [C_{cs}] & [C_{cc}]\end{bmatrix}$

are the (*nxn*) matrices representing the structural stiffness and damping; and $[K_C]$ and $[C_C]$ are the (6x6) diagonal matrices assigning the stiffness and damping lumped SSI parameters to the corresponding DOF.

The structural damping matrix $[C_S]$ in global coordinates is derived from the modal damping ratios by following matrix transformation:

$$[C_S]_i = [\vec{\phi}^T]^{-1}\begin{bmatrix}\ddots & 0 & 0\\ 0 & 2h_i\omega_i & 0\\ 0 & 0 & \ddots\end{bmatrix}[\vec{\phi}]^{-1} \qquad \text{(Eq. 3.7.2-3)}$$

where

h_i = the stiffness weighted modal damping ratio of the ith mode,

ω_i = the natural frequency of vibration (Eigen value) of ith mode (rad/sec),

$[\vec{\phi}]$ = the mode shape matrix (Eigen vector matrix) normalized with respect to the mass matrix of the combined soil-structure system as follows:

$[\vec{\phi}]^T \cdot [M] \cdot [\vec{\phi}] = [I]$ (where $[I]$ is an identity matrix)

The natural frequencies and the normalized mode shape matrix are obtained from the modal analysis of the combined soil-structure system.

The stiffness weighted modal damping ratio h_i of the jth mode is obtained from the following equation:

$$h_j = \frac{\vec{\phi}_j^{\,T}[\bar{K}]\vec{\phi}_j}{\vec{\phi}_j^{\,T}[K]\vec{\phi}_j} \qquad \text{(Eq. 3.7.2-4)}$$

where

$[K]$ = the stiffness matrix of the combined soil-structure system composed as shown in Equation (3.7.2-2)

$\vec{\phi}_j$ = the jth normalized mode shape vector

$[\bar{K}]=\sum[k_i]\cdot\xi_i$ = the modified stiffness matrix constructed from the products of the element stiffness matrices $[k_i]$ and the applicable damping ratio ξ_i. To be noted is that the damping ratio for the soil spring is set to zero, which means no material damping is assumed by the soil.

The stiffness matrix $[K_C]$ and the damping matrix $[C_C]$, representing the dynamic properties of the subgrade, are constructed from the lumped SSI parameters. The

~~lumped SSI parameters are calculated from the formulas given in ASCE 4-98, Subsection 3.3.4 (Reference 3.7-9) that are based on closed form solutions for vibrations of a rigid basemat resting on elastic half space. The values of the lumped parameters for damping in the horizontal direction are conservatively reduced to 60% of the values calculated from the formulas of ASCE 4-98 (Reference 3.7-9) unless an applicable justification based on site-specific conditions is applied.~~

~~The damping matrix of the combined soil-structure dynamic system [*C*] is non-proportional to the stiffness and the mass inertia of the dynamic system and as such prevents the decoupling of the differential equations of motion (Equation 3.7.2-1) into generalized coordinates. Therefore, the solution for the dynamic response of the soil-structure system is obtained from a time domain analysis that uses a direct integration method. The implicit integration technique is adopted based on Newmark β method (β=0.25, γ=0.5). The time step of integration (Δt) is set to 0.001 sec, which is verified to be small enough such that the use of 1/2Δt time step does not change the value of calculated response by more than 10%.~~

As described above, the ACS SASSI program (Reference 3.7-17) analysis method requires solution in the frequency domain of the coupled equations of motion that represent the SSI system.~~The above-described method utilizing direct integration for time history analysis is used for the analysis of the R/B-PCCV-containment internal structure on their common basemat.~~ As an alternative option for seismic category I systems and subsystems, it is also acceptable to utilize the composite modal damping method associated with the modal superposition of time history analysis when the equations of motion can be decoupled in accordance with SRP 3.7.2 (Reference 3.7-16), Section II.13.

Analyses of seismic category I and II subsystems are primarily performed using equivalent static load analysis or modal response spectra analysis. The input seismic loads are defined by ISRS that are obtained from the time history analyses of the major seismic category I buildings and structures. Seismic subsystems are discussed in Subsection 3.7.3, and the modal response spectra and equivalent static load analysis methods are discussed in Subsection 3.7.3.1.

Seismic anchor motions are taken into consideration for all seismic analysis methods used in the design of seismic category I and seismic category II SSCs. All analysis approaches have been based on linear elastic analysis of SSCs, with allowable stresses within the elastic limits for seismic loads and load combinations as delineated in Section 3.8. Except in limited cases where permitted by code, inelastic behavior is not considered for seismic loads and load combinations in performing the plant design, however, limited inelastic and nonlinear behavior for seismic loading conditions may be used for site-specific COL designs, future operability analyses or as-built evaluations, as permitted in SRP 3.7.2 (Reference 3.7-16). Nonlinear and inelastic behavior is considered for certain loads and load combinations involving impact and impulsive loading, as discussed in Subsection 3.8.4.

3.7.2.2 Natural Frequencies and Responses

The seismic analysis of the R/B, PCCV, and containment internal structure and their common basemat is based on a seismic model consisting of three lumped mass stick models (for each of the three structures) that are all integrated with a three-dimensional finite element model of the R/B basement. The lumped mass stick model of the

containment internal structure is coupled with lumped mass stick models representing the dynamic properties of the reactor vessel, reactor coolant loop, and other major equipment and piping. The dynamic model is discussed further below in Subsection 3.7.2.3 and in Technical Report MUAP-10001 (Reference 3.7-47). ~~The seismic analysis and structural design of the R/B, PCCV, and containment internal structure and their common basemat are based on a combined lumped mass stick model consisting of three lumped mass stick models (for each of the three structures) that are all rigidly cross-connected at the surface of the common basemat, as discussed further below in Subsection 3.7.2.3 and in Technical Report MUAP-08005 (Reference 3.7-18).~~ The lumped mass stick models of R/B, PCCV, and containment internal structure are coupled with a detailed RCL lumped mass stick model.

The seismic model analyses results are obtained considering the potential effects of SSI. The site-independent SSI analyses, which are discussed further in Section 3.7.2.4, consider generic subgrade conditions previously described in Section 3.7.1.3. For each one of the subgrade conditions considered, the analyses are performed with the ACS SASSI program (Reference 3.7-17) where each one of the three directional components of the earthquake is applied separately to the model. The member and element forces results obtained from these analyses are then enveloped and used for development of seismic loads for design of structural members as previously described. ~~The results obtained from the seismic analysis of the lumped mass stick models are obtained considering the potential effects of SSI. The site-independent SSI analyses, which are discussed further in Subsection 3.7.2.4, consider four generic subgrade conditions: (1) soft soil with shear wave velocity V_s = 1,000 ft/s, (2) rock (medium 1) with V_s = 3,500 ft/s, (3) rock (medium 2) with V_s = 6,500 ft/s, and (4) hard rock with V_s = 8,000 ft/s (fixed base condition is assumed). For each one of the subgrade conditions considered, analyses are performed where each one of the three components of the earthquake H1, H2 and V that are described in Subsection 3.7.1.1, are applied separately to the model in the standard plant N-S, E-W and vertical direction, respectively. An additional analysis is performed for each soil case where all three directional components of the earthquake represented by statistically independent acceleration time histories are applied to the model simultaneously. The results for stick elements member forces obtained from these analyses are enveloped and then used for development of seismic loads for design of structural members.~~

Subsection 3.7.2.5 discusses development of ISRS based on the results of the site-independent seismic analyses for the US-APWR standard plant. Section 3.7.2.5 and Section 3NN.5 of Appendix 3NN discuss development of ISRS based on the results of the site-specific seismic analyses. Appendix 3NN compares the seismic responses and 5% damping ISRS obtained from the site-specific analyses of the R/B complex and the PS/Bs to the seismic responses and 5% damping ISRS obtained from site-independent analyses documented in MUAP-10006 (Reference 3.7-48).

3.7.2.3 Procedures Used for Analytical Modeling

3.7.2.3.1 General Discussion of Analytical Models

The procedures used for analytical modeling of the major standard plant seismic category I and seismic category II structures are discussed herein.

The procedures used for development of analytical models for seismic analysis are consistent with the procedures and guidelines of SRP 3.7.2, Section II.3 (Reference 3.7-

16). Structural element mass and stiffness characteristics, as well as load and tributary masses, and damping characteristics, are incorporated into the models.

The mass inertia and stiffness properties of the basemat and basement exterior walls of the R/B, and the entire PS/Bs, are characterized through the use of finite element models. Lumped mass stick models, interconnected by stiffness elements, are used to discretize the mass inertia and stiffness properties of the remaining portions of the R/B, the PCCV, and containment internal structure. ~~The models used for seismic analysis are developed by discretization of the mass inertia and stiffness properties of the dynamic system, such that the mass inertia of the system is lumped at distinct characteristic nodes, which are interconnected by a network of stiffness elements.~~ The mass is lumped in selected nodes in a way that provides an adequate representation of the mass distribution considering the high-stress concentration points of the system. In general, lumped mass inertia is assigned at the selected locations in all six DOF corresponding to translations along three orthogonal axes, and rotations about these axes. The number of DOF should be reduced by the number of constraints, where applicable.

When the subsystem analysis is performed, reduced DOFs can be used to represent the dynamic behavior at locations needed for equipment qualification, provided that they can provide an adequate and conservative prediction of the response of the equipment.

The seismic analyses of the US-APWR standard plant are performed on three-dimensional seismic ~~lumped mass stick~~ models representing ~~the major~~ seismic category I and seismic category II structures. The basic dimensions of these buildings and structures as considered in the seismic analyses are presented in the general arrangement drawings in Section 1.2. The models consider all six DOF (three rotational and three translational) and incorporate mass and stiffness eccentricities to assure that torsional and rocking/swaying effects, and any cross-directional coupling, are captured. Torsional and rocking/swaying effects are also captured at the basemat/subgrade interface by taking into account SSI, including effects related to the flexibility of the basemat foundation. The SSI analyses are addressed in Subsection 3.7.2.4.~~Torsional and rocking/swaying effects are also captured at the basemat/subgrade interface through the use of lumped SSI parameters for all six DOF. The frequency independent lumped parameter formulation and methodology for calculation of lumped stiffness and damping coefficients is addressed in detail in the SSI analysis discussion in Subsection 3.7.2.4.~~

It is the responsibility of the COL Applicant to develop analytical models appropriate for the seismic analysis of buildings and structures that are designed on a site-specific basis including, but not limited to, the following:

- PSFSVs (seismic category I)
- ESWPT (seismic category I)
- UHSRS (seismic category I)

Since there will not be any seismic category I SSCs contained within seismic category II buildings, the development of ISRS is not necessary.

Using the computer program ANSYS (Reference 3.7-21), detailed FE models are developed for the major seismic category I and seismic category II structures, primarily to be utilized as static analysis models for structural design based on loads and load

combinations as described in Section 3.8. However, the ANSYS FE models are also used for validation of the dynamic lumped mass stick models and the seismic analysis results, as discussed later in this section.

3.7.2.3.2 R/B, PCCV, and Containment Internal Structure Lumped Mass Stick Models

The standard plant R/B complex seismic response analyses utilize lumped mass stick models representing the dynamic properties of the PCCV, containment internal structure, and the R/B superstructure above its basement. To account for the effects of dynamic coupling of the containment internal structure with the equipment and the piping, the analysis of the R/B complex includes lumped mass stick models representing the stiffness and mass inertia properties of the major equipment and piping, including the reactor vessel and reactor coolant loop. The methodology initially used to develop the stick models and the stick model properties is presented in Technical Report MUAP-08005 (Reference 3.7-18), and in the following Subsections 3.7.2.3.4 through 3.7.2.3.9. The methodology in Subsections 3.7.2.3.4 through 3.7.2.3.9 is enhanced by: adjusting member properties where necessary to account for the effects of concrete cracking, incorporating single degree of freedom models representing the out-of-plane flexibility of slabs and walls, and integrating the stick models with a finite element model of the R/B complex basement to form the overall SSI model of the R/B complex. Technical Report MUAP-10001 (Reference 3.7-47) presents the methodology used for these enhancements and describes the overall enhanced R/B complex model in further detail.~~The seismic analysis and structural design of the R/B, PCCV, and containment internal structure and their common basemat is based on a combined lumped mass stick model consisting of three lumped mass stick models (for each of the three structures) that are all rigidly cross-connected at the surface of the common basemat. The R/B, PCCV, and containment internal structure are coupled with a detailed RCL lumped mass stick model as documented in Technical Report MUAP-08005 (Reference 3.7-18).~~

The lumped-mass stick models used for the seismic analysis of US-APWR R/B, PCCV, and containment internal structure and their basemat consider the eccentricities between the center of rigidity and the center of mass of structures. The models represent the actual locations of masses and centers of rigidity, thus, accounting for the torsional effects caused by the eccentricity. The modeling approach accounts for the differences between the vertical and horizontal centers of rigidity by using two stick elements to model the stiffness of the structural members at each story. A truss element located at the vertical center of rigidity represents the vertical stiffness of the floor, and a beam element located at the shear center of rigidity represents the shear and bending stiffness of the floor. Both stick elements are rigidly connected to the common center of mass at each major floor elevation. This modeling approach helps eliminate the errors in computation of the seismic responses that are due to the rocking SSI effects caused by an inaccurate representation of the vertical center of rigidity. See Su
discussion of accidental torsion.

DCD_3.7.2-18

To model the interaction with the underlying subgrade, the standard plant R/B complex model is analyzed in conjunction with a set of eight generic layered profiles using the program ACS SASSI (Reference 3.7-17) as discussed in Subsection 3.7.2.4. ~~To model the interaction of the basemat and the structures with the underlying subgrade, frequency-independent lumped parameters are established vertically at the bottom of the basemat, and horizontally at the center of the common basemat. The lumped parameter coefficients representing the stiffness and the damping properties of the SSI, are~~

~~developed in accordance with ASCE 4-98 (Reference 3.7-9), Table 3.3-3, as discussed in Subsection 3.7.2.4.~~

The structural elements of the R/B, which includes the fuel handling area, are concentrated and reduced to one set of stick models below the operating floor level. The part of the R/B above the operation floor level, except for the fuel handling area, is represented by several stick models that are interconnected by horizontal rigid links representing the floor diaphragm. The rigid links restrain only the in-plane translational displacements of the floor without affecting the deformations in the other DOF. The containment internal structure and the PCCV are modeled separately, and they are rigidly connected to the R/B stick model at the surface of the common basemat. The R/B, PCCV, and containment internal structure are all structurally separated from each other above their common basemat by expansion joints, which are discussed further in Subsection 3.7.2.8. Detailed descriptions of the R/B, PCCV, and containment internal structure and their common basemat are presented in Section 3.8, where the structural design of those buildings and structures is addressed.

A set of static and dynamic analyses is performed on the detailed three-dimensional FE model that is developed for computation of internal forces and stresses in the structural members and components of R/B-PCCV-containment internal structure subject to design loads and load combinations that are discussed further in Section 3.8. The FE model combines the R/B, PCCV, and containment internal structure on their common basemat. For clarity of presentation, the combined FE model is shown in Figures 3.7.2-1, 3.7.2-2, 3.7.2-3, and 3.7.2-4 as four separate isometric views showing the PCCV, containment internal structure, and R/B on the common basemat. The results from the static and dynamic analyses performed on the detailed FE model are used to validate the dynamic properties of the stick models as described in Subsection 3.7.2.3. The lumped mass stick models of R/B, PCCV, and containment internal structures are developed independently of the detailed FE model.

3.7.2.3.3 East and West PS/Bs ~~Lumped Mass Stick~~ Models

The seismic model for the PS/Bs is a finite element model in ACS SASSI (Reference 3.7-17) which represents the dynamic properties of the building in all important modes of vibration and is able to capture SSI effects related to the flexibility of the basemat foundation. The model is developed initially in ANSYS (Reference 3.7-21) for purposes of equivalent static structural design as explained further below, and is translated into the format of ACS SASSI for purposes of seismic analysis by using the built-in converter in ACS SASSI. The ACS SASSI FE model is generated only for the West PS/B of the US-APWR standard plant, since the East and West PS/Bs are nearly identical structurally.~~The lumped mass stick models used for the seismic analysis of east and west PS/Bs consider the eccentricities between the center of rigidity and the center of mass of structures as described above for the R/B, PCCV, and structure and their common basemat.~~

DCD_3.7.2-18

The structural walls and slabs, including the floor slabs and roof slabs are modeled using shell elements, the beams and columns are modeled as beam elements and the basemat is modeled using solid elements. At the connections between the basemat and the walls, the shell elements are extended into the basemat between the solid elements to transmit nodal rotations to the solid elements. The extended elements share nodes with the corresponding face of the solid elements but have no mass. The mass density properties of the finite elements are adjusted to account for the weight of the equipment

and additional miscellaneous loading described in Section 3.8. The meshing of the seismic model ensures that the discretized structure is able to capture the local responses and the responses of the significant modes of vibration which corresponds to frequencies equal or below the highest frequency of interest, 50Hz. The seismic model is analyzed with ACS SASSI in conjunction with the generic soil profiles described in Subsection 3.7.1.3 to obtain SSI results and input loading for equivalent static analysis and structural design. The PS/B seismic model and the seismic analysis results are discussed in further detail in Technical Reports MUAP-10001 and MUAP-10006 (References 3.7-47 and 3.7-48), respectively.~~To model the interaction of the basemat and the structures with the underlying subgrade, frequency-independent lumped parameters are established vertically at the bottom of the basemat, and horizontally at the center of basemat with the subgrade boundary. The lumped parameter coefficients representing the stiffness and the damping properties of the SSI, are developed in accordance with ASCE 4-98 (Reference 3.7-9), Table 3.3-3, as discussed in Subsection 3.7.2.4.~~

A set of static analyses are performed on the detailed three-dimensional FE model that is developed for computation of internal forces and stresses in the structural members and components of PS/Bs. Applicable design loads and load combinations are discussed further in Section 3.8.

3.7.2.3.4 Subsystem Coupling Requirements

For purposes of modeling the R/B-PCCV-containment internal structure on their common basemat, large seismic subsystems contained within these structures are evaluated against the mass and frequency ratio criteria given in SRP 3.7.2, Section II.3(b) (Reference 3.7-16), as follows:

- If R_m is less than 0.01, decoupling can be done for any R_f
- If 0.01 less than or equal to R_m and less than or equal to 0.1, decoupling can be done if 0.8 is greater than or equal to R_f and greater than or equal to 1.25
- If R_m is greater than 0.1, a subsystem model should be included in the primary system model

where

R_m = (total mass of supported subsystem)/(total mass of supporting system)

R_f = (fundamental frequency of supported system)/(dominant frequency of support motion)

If these criteria require the subsystem to be coupled with the primary seismic model, both the stiffness and the mass of the subsystem are included in the overall model to

the total weight *W*, the weight moment of inertia (J_{xx}, J_{yy}, J_{zz}), and the center of mass. They are in principle evaluated by hand calculation as described below.

3.7.2.3.6.1 Mass Points and Associated Weights (*W*)

The mass points are, in principle, established at the major floor levels represented by nodes in the lumped mass stick model.

Figure 3.7.2-5 depicts how the mass moments of inertia and weights associated with the lumped masses are computed.

In addition to the structural mass, mass equivalent to a floor load of 50 pounds per ft^2 is considered to represent miscellaneous dead weights such as minor equipment, piping, and raceways. The mass equivalent to 25% of the floor design live load and 75% of the roof design snow load is also included. The mass of major equipment is considered to be distributed over a representative floor area or included as concentrated lumped masses at the equipment locations.

Vertical amplification effects on the masses of floor slab systems due to out-of-plane flexibility are addressed as part of Technical Reports MUAP-10001 and MUAP-10006 (References 3.7-47 and 3.7-48) ~~a later Technical Report~~.

3.7.2.3.6.2 Mass Moment of Inertia (J_{xx}, J_{yy}, J_{zz})

Mass moments of inertia are considered at all of the mass points for all three rotational DOF.

3.7.2.3.7 Shear Stiffness

The effect of in-plane shear deformation is included in the model. For the lumped mass stick model, effective shear area is computed from the sum of the component shear areas of the individual walls parallel to the direction of the applied force.

The stiffness of the stick model is evaluated by hand calculation as shown in Figure 3.7.2-6, which summarizes the approximate methods used to compute the section areas, geometrical moments of inertia, and axial areas for the PCCV and R/B structures, under the following assumptions:

- Walls continuously built up from the basemat, whose thickness is more than 40 in. are treated as seismic walls.
- Openings with area more than 2,880 in^2 (80 in. x 36 in.) are considered in evaluating the stiffness of walls as discussed in Subsection 3.7.2.3.

Generally, in accordance with ASCE-4 (Reference 3.7-9) Subsection C3.1.8.3, if the shear wall has no flange elements at its ends, the shear area is equal to the total web area divided by 1.2. If flanges are present, the shear area is equal to the total web area. The effective flange width of each perpendicular wall may be calculated using the following reduction due to shear lag effects:

$$W_e = \frac{H}{3} \leq \frac{W}{2}$$

(iii) Vertical displacements are calculated from the static FE analysis and used to evaluate the effective vertical axial area as follows:

$$K_i = \frac{A_i E}{L_i} = \frac{\sum W_i}{\Delta_i - \Delta_{i-1}}$$

where

K_i = effective vertical axial stiffness of the element *i*

A_i = effective vertical axial area of the element *i*

L_i = length of the element *i*

W_i = weight of the mass *i*

Δ_i = vertical displacement of node *i*

E = Young's modulus of the concrete material

3.7.2.3.10 Validation of the Seismic ~~Lumped Mass Stick~~ Models

The seismic response of R/B and containment internal structure is obtained from the analyses of three-dimensional seismic ~~lumped mass stick~~ models, portions of which are lumped mass stick models whose stiffness and mass properties are evaluated by hand calculation as described in the previous section. The seismic response of the PS/Bs is obtained from analyses of three-dimensional finite element seismic models. As described herein, detailed FE mathematical models that are initially prepared for static design analysis of these structures are used to verify that the seismic ~~lumped mass stick~~ models realistically represent the dynamic properties of the R/B complex and PS/Bs ~~containment internal structure~~.

The lumped mass stick models are validated as follows:

- The static deformations results obtained from the analysis of the detailed FE models are compared to those obtained from the analysis of the stick models to verify that the models exhibit closely matching results.

- The 5% damping ISRS results obtained from the fixed base analysis of the stick model are compared to those obtained from the fixed base analysis of the detailed FE model for various locations within the structures. The results are considered acceptable if the stick model results envelope (or reasonably match in terms of peaks and amplitude) those of the FE model.

All computer programs used for modeling are also verified and validated as in accordance with ANSI/ASME NQA-1-2004 (Reference 3.7-23) requirements.

Comparisons of static deformations are made between the three-dimensional stick model and the FE model, as previously discussed.

iii) Comparison of ISRS

Comparisons of ISRS are made between the three-dimensional stick model and the FE model at various points in various elevations, as previously discussed.

3.7.2.3.10.3 Containment Internal Structure

i) Fixed-base FE model

Figure 3.7.2-10 shows the fixed-base FE model for the containment internal structure, which is compared with the three-dimensional stick model. To verify the three-dimensional stick model, the FE model is used to estimate its rigidity by both static and dynamic analyses.

ii) Rigidity estimation by static analysis

Comparisons of static deformations are made between the three-dimensional stick model and the FE model, as previously discussed.

iii) Comparison of ISRS

Comparisons of ISRS are made between the three-dimensional stick model and the FE model at various points in various elevations as previously discussed.

3.7.2.3.10.4 PCCV

i) Fixed-base FE model

Figure 3.7.2-1 shows the fixed-base FE model for the PCCV, which is compared with the three-dimensional stick model of the superstructure. To verify the three-dimensional stick model, the FE model is used to estimate its rigidity by both static and dynamic analyses.

ii) Rigidity estimation by static analysis

Comparisons of static deformations are made between the three-dimensional stick model and the FE model, following the general approach discussed above.

iii) Comparison of ISRS

Comparisons of ISRS are made between the three-dimensional stick model and the FE model at various nodes.

iv) Modal analysis

A modal analysis is performed for the three-dimensional finite element model and the SASSI stick model to compare the structure's dominant natural frequencies.

3.7.2.3.10.5 PS/Bs

As previously discussed, the PS/B seismic model is developed from a detailed FE model initially prepared for the detailed static analysis. The PS/Bs seismic model is validated by performing various static and dynamic structural analyses on both the static and

dynamic models considering a "fixed base condition," i.e., full constraints on translation and rotation at the bottom of the basemat. The analyses include a 1g static analysis performed to confirm static load/deformation distributions and dynamic properties, modal analysis, and mode-superposition transient dynamic analysis using the corresponding ANSYS Solver. Transfer functions and ISRS obtained from the SASSI validation analyses at selected nodes are compared to the results obtained from the modal and modal superposition time history analyses on the detailed static model to ensure that SASSI model is accurately representing dynamic properties of the PS/B.

3.7.2.3.11 Equivalent Masses due to Dead and Live Loads

In the design of seismic category I and seismic category II buildings and structures, dead loads and various portions of live loads are treated as equivalent masses for consideration in the global seismic analysis models. For example, 25% of the design floor live loads during normal operation (ASCE 7, Subsection 12.7.2 [Reference 3.7-24]) and ~~or~~ 75% of the roof snow load, whichever is applicable depending on the specific location in the building or structure, have been considered in computing tributary mass at node points in the seismic models. This is consistent with SRP 3.7.2, Section II.3(d) (Reference 3.7-16). For the containment operating deck in the PCCV, the design floor live load for maintenance and refueling is 950 lb/ft^2 and the floor live load for normal operation is 200 lb/ft^2. Therefore, 50 lb/ft^2 (25% of 200 lb/ft^2) has been used as an equivalent live load (mass) for the seismic analysis models.

Equivalent dead loads used in the seismic analysis models also include the weight of SSCs not specifically identified or included as dead loads in the models such as the weight of minor piping systems, cables and cable trays, ducts, and all related supports. Similarly, equivalent live loads include fluid contained within the minor piping and equipment under operating conditions. The weight of permanently attached tanks (uniformly distributed over the room floor area) is included as equivalent dead load (mass) in the seismic models. For the seismic analysis models, an equivalent dead load of a minimum of 50 lb/ft^2 uniform load is applied to cover these conditions. This is consistent with SRP 3.7.2, Section II(3)(d) (Reference 3.7-16).

For floors with a significant number of small pieces of equipment (e.g., electrical cabinet rooms), their total weight divided by the floor area that effectively supports the equipment within the room, plus an additional 50 lb/ft^2, is used as the equivalent dead load.

The equivalent dead loads (mass) are appropriately increased in areas such as main piping corridors, and cable tray and HVAC ductwork runs where such loads exceed the value of 50 lb/ft^2.

3.7.2.4 Soil-Structure Interaction

In accordance with the requirements of SRP 3.7.2, Section II.4 (Reference 3.7-16), SSI effects are considered in the seismic response analysis of all major seismic category I and seismic category II buildings and structures that are part of the US-APWR standard and non-standard plant. The SSI analyses use seismic models that are described above in Section 3.7.2.3 to represent the dynamic properties of the structures. The ACS SASSI (Reference 3.7-17) PS/Bs model and enhanced R/B lumped mass stick model, combined in ACS SASSI with the FE model of the basement, provide adequate degrees of freedom to ensure that the modeling requirements of SRP 3.7.2, Section II A (iv) are met, and that the seismic response in the high frequency range is captured. For the R/B

complex and PS/Bs, site-specific SSI analyses are also performed using the computer program ACS SASSI in order to confirm that site-specific effects are enveloped by the site-independent analyses. ~~The SSI analyses use the lumped mass stick models that are described above in Subsection 3.7.2.3 to represent the dynamic properties of the super-structures. In the case of the SSI lumped parameter analysis of the R/B-PCCV-containment internal structure, a site-specific SSI analysis is also performed using the computer program SASSI (Reference 3.7-17) in order to confirm that site-specific effects are enveloped by the standard design.~~

The site-independent SSI analyses take into account the flexibility of the basemat, frequency-dependence of the SSI impedance, layering of the subgrade, elevation of the water table, and scattering of the input motion. The SSI analyses are performed with ACS SASSI (Reference 3.7-17) in the frequency domain utilizing the substructuring technique and complex stiffness representation of stiffness and damping properties of the structures and the subgrade. The subgrade media and SSI system damping to model the dissipation of energy due to material damping of the structural members and the soil are also discussed in Subsections 3.7.1.3 and 3.7.1.2. The response of the system at selected frequencies of analyses is obtained as the solution of a set of complex algebraic equations. The frequencies of analyses are selected to accurately capture the response of the structure at all important frequency ranges. The amplitudes of the interpolated transfer functions are plotted and investigated to ensure the accuracy of the interpolation of the response for the required range of frequencies. Approaches and methods used for the SSI analyses are discussed further in Technical Report MUAP-10001 (Reference 3.7-47). ~~The site-independent SSI analyses of US-APWR standard plant are performed by assuming an absolutely rigid basemat that rests on uniform linear-elastic half-space. A viscous damping represents the dissipation of energy in the elastic half space that is due to radial damping in the subgrade media. This assumption allows the use of simple closed solutions in terms of frequency-independent lumped parameters that describe the stiffness and the dissipation of energy in the SSI system in the six DOF. Three DOF represent the translations of the basemat in two orthogonal horizontal directions and in the vertical direction. Two DOF represent the rocking of the basemat about two horizontal axes, and one rotational DOF describes the torsional vibrations of the basemat. The lumped parameters representing the stiffness and damping properties of the SSI are calculated from the formulas presented in Table 3.3-3, Subsection 3.3.4.2 of ASCE 4-98 (Reference 3.7-9). The values of the lumped SSI parameters for damping in two horizontal translational DOF are conservatively set at 60% of the theoretical dashpot values obtained from formulas in Table 3.3-3.~~

The ratio of basemat depth-to-equivalent-radius for the R/B-PCCV basemat is approximately 0.27. ASCE 4-98 Subsection 3.3.4.2 (Reference 3.7-9) considers that a basemat depth-to-equivalent-radius ratio of less than 0.3 is an indication of a shallow embedment foundation, for which effects of the embedment on the seismic response of the building are generally not significant. SSI analysis performed as part of the site-independent US-APWR standard plant design neglects the effects of embedment of the common R/B and PCCV basemat. Therefore, the R/B-PCCV seismic models are not coupled with any subgrade or backfill material at the sides of the basemat or along the faces of below-grade exterior walls, and no credit is taken in the seismic analysis for reduction in amplitude of the response due to foundation embedment in the subgrade or backfill materials. Embedment effects, including shifts in the structural frequencies, are considered to be small enough to be enveloped by the variations of subgrade stiffness considered in the standard design seismic response analyses of a surface foundation.

However, the effects of the embedment are required to be analyzed on a site-specific basis as discussed in Subsection 3.7.2.4.1 to confirm suitability of design.

The SSI analyses are performed as previously described by analyzing the seismic models in ACS SASSI (Reference 3.7-17) in conjunction with the generic soil profiles with depths to rock as discussed in Subsection 3.7.1.3, including a profile which simulates a site with hard rock at a depth of 100 ft. The profiles have dynamic properties that are strain-compatible with the CSDRS input ground motion as discussed in Subsection 3.7.1.3, and the input ground motion time histories are applied separately in each direction in the SASSI analyses. ~~The use of frequency independent SSI impedance parameters is based on the assumption that the subgrade conditions are relatively uniform up to a depth of one equivalent basemat diameter below the bottom of the basemat of the major seismic category I structures. Dry soil conditions are assumed in order to simplify the analysis. The following values for shear wave velocity V_s, density γ and Poisson's ratio ν are assigned to the uniform elastic half-space to simulate the general subgrade conditions:~~

- ~~Soft soil site, V_s = 1,000 ft/s, γ = 110 pcf, ν = 0.40~~
- ~~Rock site (Medium 1), V_s = 3,500 ft/s, γ = 130 pcf, ν = 0.35~~
- ~~Rock site (Medium 2), V_s = 6,500 ft/s, γ = 140 pcf, ν = 0.35~~
- ~~Hard rock site, V_s = 8,000 ft/s, γ = 160 pcf, ν = 0.30~~

~~A fixed base analysis considers the hard rock case listed above. The values used for the soil shear wave velocities are considered to be compatible to the strain level corresponding to the site-independent SSE. Table 3.7.2-3 summarizes the US-APWR standard plant seismic SSI analysis cases, with respect to the input time histories applied to the stick models resting on the uniform elastic half-space having the different subgrade conditions listed above.~~

The site-specific SSI analyses take into account site-specific conditions such as soil layering, location of water table and embedment of the basemat and, thus, validate the results of the site-independent SSI analysis and assumptions contained in the US-APWR standard plant design. This is accomplished through site-specific SSI analysis as explained below.

3.7.2.4.1 Requirements for Site-Specific SSI Analysis of US-APWR Standard Plant

The COL Applicant referencing the US-APWR standard design is required to perform a site-specific SSI analysis for the R/B-PCCV-containment internal structure utilizing the program ACS-SASSI SSI Version 2.2 (Reference 3.7-17) which contains time history input incoherence function capability. The SSI analysis using SASSI is required in order to confirm that site-specific effects are enveloped by the standard design. After the SASSI analysis is first performed for a specific unit, subsequent COLAs for other units may be able to forego SASSI analyses if the FIRS and GMRS derived for those subsequent units are much smaller than the US-APWR standard plant CSDRS, and if the subsequent unit can also provide justification through comparison of site-specific geological and seismological characteristics.

- The basemats are much stiffer than the supporting subgrade
- The SSI impedance functions remain relatively constant in the range of frequencies important for the design
- The consideration of basemat embedment yields conservative results

In accordance with SRP 3.7.2 (Reference 3.7-16), Section II.4, fixed base response analysis can be performed if the basemats are supported by subgrades having a shear wave velocity of 8,000 ft/s or higher, under the entire surface of the foundation.

3.7.2.5 Development of Floor Response Spectra

ISRS for the PS/Bs and RCL-R/B-containment internal structure are developed from the results of the site-independent seismic analyses of the seismic models described in Subsection 3.7.2.3 by applying methods described in Subsection 3.7.2.1, and capturing SSI effects as described in Subsection 3.7.2.4, using generic soil profiles described in Subsection 3.7.1.3. The statistically independent time histories developed from the CSDRS as described in Subsection 3.7.1.1 serve as input control motion in the analysis. Note that the dynamic properties of the stick model portions of the R/B complex seismic model presented in Appendix 3H and Technical Report MUAP-08005 (Reference 3.7-18) are modified to account for the effects of cracking for accuracy in the seismic design and development of the ISRS. The ISRS are derived from the calculated responses at locations and elevations where majority seismic category I and II SSCs are located. ~~ISRS for the major seismic category I structures as well as design spectra for the RCL system are developed from the results of the site-independent seismic analysis of the coupled RCL-R/B-PCCV-containment internal structure lumped mass stick model described in Technical Report MUAP-08005 (Reference 3.7-18) by using direct integration time history analysis method as described in Subsection 3.7.2.1, and by capturing SSI effects for all four generic soil conditions as discussed in Subsection 3.7.2.4. The statistically independent time histories developed from the CSDRS as described in Subsection 3.7.1.1 serve as input control motion for the analysis. The dynamic properties of the stick models are discussed in detail in Appendix 3H for the R/B-PCCV-containment internal structure and the east and west PS/Bs. The ISRS are derived from the calculated responses of the R/B-PCCV-containment internal structure and PS/Bs lumped mass stick models at locations and elevations where major seismic category I and II SSCs are located.~~

In developing the ISRS, the effects of floor slab system out-of-plane flexibility are considered by investigating floor slab systems (using local FE models or other means of analysis), independently from the overall lumped mass stick model in order to determine their natural frequencies. Depending on the results, the floor slab systems may then be analyzed as simple single DOF vertical oscillators to determine maximum accelerations (ZPA values) to be used for development of the ISRS for the respective floor locations. The concrete cracking of slabs is considered in the development of the single DOF models, in accordance with ACI 349-01 (Reference 3.7-31). If the results of the independent modal analyses indicate that higher modes of vibration have to be considered, the floor systems may also be analyzed as subsystems, as described further in Subsection 3.7.3.1. The local analyses of floor slab systems with respect to out-of-plane flexibility and effects on the ISRS are addressed in Technical Reports MUAP-10001 and MUAP-10006 (References 3.7-47 and 3.7-48) ~~as part of a later Technical Report~~.

The SSE ISRS for seismic category I buildings and structures of the US-APWR standard plant are developed directly from the results of the site independent seismic analysis. As previously explained in Subsection 3.7.1.1, since the OBE ground motion is limited to a maximum of 1/3 times the CSDRS, explicit design and analysis for OBE is not required, as permitted by 10 CFR 50 Appendix S (Reference 3.7-7). Therefore, separate OBE ISRS are not developed for design and analysis of US-APWR standard plant systems and subsystems.

In the case where seismic qualification by testing is performed in accordance with IEEE Std 344-1987 (Reference 3.7-25), test response spectra which replicate the OBE response spectra are not required since the OBE condition is no longer used as a design basis. The US-APWR program for seismic and dynamic qualification of mechanical and electrical equipment is discussed in Section 3.10.

The ISRS are developed for damping values equal to 0.5%, 2%, 3%, 4%, 5%, 7%, 10%, 20% of critical damping and for variable damping where permitted by ASME Code Case N411-1, as discussed in RG 1.61 (Reference 3.7-15). The ISRS envelope the spectra obtained from the site-independent analyses for all ~~four of the different~~ generic subgrade conditions described in Subsection 3.7.1.3. 5% critical damping ISRS developed from the site-independent seismic analyses of the R/B complex and PS/Bs, which are used for design and validation by comparison to site-specific 5% critical damping ISRS, are provided in Appendix 3I. The process for developing enveloped ISRS is described in detail in Section 3.5 of Technical Report MUAP-10006 (Reference 3.7-47) and is summarized as follows ~~Figure 3.7.2-11 outlines the development of the enveloped design ISRS, for which Figure 3.7.2-12 provides an example of a design ISRS. Design ISRS for R/B-PCCV containment internal structure are provided in Appendix 3I. The process for developing enveloped ISRS is as follows~~:

- The response spectra are generated for the three components of earthquake by SRSS, following the general guidance of RG 1.122 (Reference 3.7-26) for frequencies up to 100 Hz.
- The maximum spectral acceleration at each frequency obtained from the seismic analysis of any general subgrade conditions is selected for the envelope.
- The enveloped ISRS are smoothed and broadened by +/-15%. The valleys in the enveloped ISRS are filled when necessary to capture potential shifts in the seismic response caused by soil properties that are different from, but bounded by, the ~~four~~ generic soil conditions of the standard plant. Alternatively in some locations, the peak shifting method described in Subsection 3.7.3.1 can be used instead of the broadened response spectra method.
- The broadened response spectra method discussed in Subsection 3.7.3.1 is used or alternatively in some locations, the peak shifting method described in Subsection 3.7.3.1 can be used.

ISRS are not required for non-seismic category I building structures, such as the AC/B, A/B and T/B, since no safety-related systems and components are present in non-seismic category I buildings and structures. The design, installation, and mounting of non safety-related systems and components in these buildings are based on the applicable site-specific building codes and standards.

3.7.2.6 Three Components of Earthquake Motion

As previously discussed in Subsection 3.7.1.1, the seismic analyses of the major seismic category I structures are based on one set of three mutually orthogonal artificial time histories, with each of the three directional components being statistically independent of the other two. The acceleration time histories of the horizontal H1 and H2 components of the earthquake are applied in N-S direction and E-W directions respectively. The acceleration time history V is applied in the vertical direction.

The three components of the earthquake are applied on the seismic ~~lumped mass stick~~ model separately in ACS SASSI (Reference 3.7-17) for obtaining ~~and~~ the maximum accelerations of the response in the three orthogonal directions~~ are calculated at each lumped mass point~~. The maximum responses of interest of SSCs obtained from the responses of each of the three components of motion are then combined using SRSS or the Newmark 100%-40%-40% method in accordance with RG 1.92, Rev.2 (Reference 3.7-27). The combined maximum accelerations, obtained through the process described previously in Subsection 3.7.2, are then used as basis for development of the SSE loads used for the design of structural members, components and connections of US-APWR standard plant. These SSE design loads are applied as static loads on the detailed FE model in conjunction with other design loads and load combinations.

The development of the ISRS uses the SRSS method to combine the responses from the three components of the earthquake motion.

Although the above approach has been used for seismic analysis of the major seismic category I structures, seismic responses of other seismic systems and subsystems due to the three components of earthquake motion can be combined using any one of the following methods in accordance with RG 1.92, Rev.2 (Reference 3.7-27):

i) The peak responses due to the three earthquake components from the response spectra and equivalent static analyses are combined using the SRSS method.

ii) The peak responses due to the three earthquake components are combined directly, using the Newmark combination method that assumes that when the peak response from one component occurs, the responses from the other two components are 40% of the peak (100%-40%-40% method). Combinations of seismic responses from the three earthquake components, together with variations in sign (plus or minus) are considered.

iii) The time-history of the responses from the three earthquake components that are applied simultaneously can be combined algebraically at each time step to obtain the combined response time-history. The design seismic loads are selected from the maximum values or the most critical combination of values extracted from the time history results representing the responses directly related to the design of the particular member considering sign reversals, such as the relevant internal forces or stresses in the member. Due to the uncertainties introduced by phasing effects, the design does not use time history results for other responses, such as accelerations or displacements at points in time that are indirectly related to the basic design inputs.

3.7.2.7 Combination of Modal Responses

As previously discussed, the seismic responses of the seismic category I building models are obtained using three-dimensional SSI models with the program ACS SASSI (Reference 3.7-17). ACS SASSI utilizes time history analysis in the frequency domain in which the equations of motion are solved using a global complex matrix that is assembled from the complex matrices for the soil and structural elements. Therefore modal combination is not utilized. ~~As previously discussed, the seismic responses of the major seismic category I structures lumped mass stick models are obtained utilizing the direct integration method of time history analyses. As described in Subsection 3.7.2.1, the damping matrix is not proportional to the stiffness and mass matrix of the combined soil-structure model, so the decomposition of the equations of motion in generalized coordinates is not possible. Therefore, the response of the major seismic category I structures are obtained directly by integrating the equations of motions presented in Equation 3.7.2-1 without performing modal decomposition and subsequent modal superposition.~~

When the modal superposition time history analyses or response spectra analyses are used for seismic design of other seismic category I and seismic category II systems and subsystems, all necessary modes are included in order to capture a minimum of 90% of the cumulative mass of the building or structure being analyzed. In modal superposition, only modes with frequencies less than the frequencies defining the ZPA response participate in the modal solution. The modal contribution of the residual rigid response for modes with frequencies greater than ZPA frequency is accounted for by using the missing mass method. As permitted by RG 1.92, Rev.2 (Reference 3.7-27), the missing mass contribution, scaled to the instantaneous input acceleration, is treated as an additional mode in the algebraic summation of modal responses at each time step. The missing mass contribution is considered for all DOF.

When the response spectra method of analysis is used (see Subsection 3.7.3.1 for a discussion of response spectra methods of analysis), modal responses have been combined by one of the RG 1.92, Rev.2 (Reference 3.7-27), methods, or by the 10% grouping method described below. In some applications, the more conservative modal combination methods contained in Rev.1 of RG 1.92 (Reference 3.7-28) are also used, as permitted in Revision 2 of RG 1.92 (Reference 3.7-27).

For the grouping method, the total unidirectional seismic response for subsystems is obtained by combining the individual modal responses using the SRSS method for frequencies spaced more than 10%.

For subsystems having modes with closely spaced frequencies, this method is modified to include the possible effect of these modes. The groups of closely spaced modes are chosen so that the differences between the frequencies of the first mode and the last mode in the group do not exceed 10% of the lower frequency.

The combined total response for systems having such closely spaced modal frequencies is obtained by adding to the SRSS of all modes the product of the responses of the modes in each group of closely spaced modes.

This can be represented mathematically as follows:

3.7.2.8.4 A/B

The A/B contains the US-APWR standard plant radioactive waste processing facility. This facility is designated as Classification RW-IIa in accordance with RG 1.143 (Reference 3.7-19). However, the A/B is designed as seismic category II. The seismic, wind, tornado, and flood design requirements for seismic category II are more stringent than those of Classification RW-IIa as outlined in RG 1.143 (Reference 3.7-19). The A/B is located on the west side of the R/B, and has one PS/B on its south side and the AC/B on its west side. The A/B is separated from these structures with expansion joint(s) sufficiently sized to prevent contact between buildings even if the maximum translational and rotational displacements due to a seismic loading (and other loading) were to occur. The minimum sizes of expansion joints to prevent interaction is determined by considering, at all potential interaction locations, the absolute summation of the A/B deflection and the adjacent structures' deflection (R/B, PS/B, and AC/B) obtained from the response spectra or time history analysis results for those structures, except for the AC/B, the deflection results are determined through the applicable code method.

The majority of the A/B is a reinforced concrete structure with one floor level below grade and three stories above grade. The design philosophy of the A/B is stated as follows.

- The reinforced concrete structure is designed in accordance with the ACI 349 code (Reference 3.7-31), and the steel beams supporting some floor slabs are designed in accordance with the AISC N690 code (Reference 3.7-32).

- The design of the A/B is based on a static analysis utilizing a three-dimensional FE model, and a seismic dynamic analysis using a three-dimensional lumped mass model.

3.7.2.8.5 R/B and PCCV

The R/B and PCCV are seismic category I structures. The R/B borders the A/B, the two PS/Bs (discussed below), and the T/B on its south side. The R/B rests on a common basemat with and envelopes the PCCV up to the R/B roof, which varies in elevation as shown on the general arrangement drawings in Section 1.2. However, to preclude seismic and structural interaction above the common basemat, the R/B is separated from the PCCV with a 4 in. minimum expansion joint at all above-basemat locations. The expansion joint has been sized to prevent contact between the R/B and PCCV super-structures even if the maximum translational and rotational displacements due to a seismic loading (and other loading) were to occur. The expansion joint size has been determined by considering, at all potential interaction locations, the absolute summation of the deflection associated with each super-structure, obtained from the time history analysis results for those structures.

3.7.2.8.6 PS/Bs

The US-APWR standard plant PS/Bs are Seismic Category I structures and their seismic modeling and analyses are described in Technical Reports MUAP-10001 and MUAP-10006 (References 3.7-47 and 3.7-48, respectively). ~~The US-APWR standard plant PS/Bs are seismic Category I structures and their design is described in a separate Technical Report (Reference 3.7-33).~~ The west PS/B borders the A/B, R/B, and T/B. The east PS/B borders the R/B and the T/B. Each PS/B rests on its own basemat. Each PS/B is required to be designed with an expansion joint along its interface with the R/B

to assure that no contact will occur between the buildings under a seismic or any other design basis loading. The expansion joint is sized to prevent contact between the structures even if the maximum translational and rotational displacements due to a seismic loading (and other design basis loading) were to occur. The expansion joints are to be determined by considering, at all potential interaction locations, the absolute summation of the deflection associated with each super-structure, obtained from the time history analysis results for those structures.

The plan dimension of each PS/B is nominally 111'-6" x 66'-0" between centerlines of exterior walls. Each PS/B is a reinforced concrete structure with one floor level under ground and the main floor level above ground. The design philosophy of the PS/Bs is stated as follows.

- The east and west PS/Bs are nearly identical structurally, and one bounding analysis is performed to represent both.
- Reinforced concrete structure of the PS/Bs is designed by ACI 349 code (Reference 3.7-31).
- The SSE load condition is the same as for the R/B.
- The design of the PS/Bs is based on a static analysis utilizing a three-dimensional FE model, and a seismic dynamic analysis using a three-dimensional FE model in SASSI (Reference 3.7-17) ~~lumped mass model~~.

3.7.2.9 Effects of Parameter Variations on Floor Response Spectra

ISRS are generated for all US-APWR seismic category I structures.

To account for variations in the structural frequencies due to the uncertainties in parameters, such as material and mass properties of the structures, damping values, soil properties, SSI analysis techniques, and the seismic modeling methods, the computed ISRS are smoothed by filling in valleys between peaks as described in Subsection 3.7.2.5, and the peaks associated with the structural frequencies are broadened by ±15% in accordance with RG 1.122 (Reference 3.7-26).

The SSI analyses of standard plant seismic category I buildings described in Subsection 3.7.2.4 include generic supporting media with frequency-dependent properties that are intended to bound the varying subgrade conditions and to account for the variation in SSI analysis techniques and seismic modeling methods. The generic supporting media are described in Subsection 3.7.1.3 and capture a broad range of subgrade conditions ranging from relatively soft soil to hard rock. ~~As described in Subsection 3.7.2.4, the seismic analyses of standard plant seismic category I buildings include four generic supporting media intended to bound the varying subgrade conditions and to account for the variation in SSI analysis techniques and seismic modeling methods. The soil properties bound shear wave velocities ranging from 1,000 ft/s, which is the LB of what is considered seismically competent material, up to an UB of 6,500 ft/s corresponding to rock. The seismic models also consider a fixed-base analysis considering a hard rock support medium with a shear wave velocity of 8,000 ft/s.~~ This wide range of supporting media conditions captures SSI and other seismic response effects, including the resulting variances in ISRS. Further, valleys between the peaks of the standard plant design ISRS are filled in, if necessary to account for variations of site-specific soil

properties within the range of supporting media conditions considered in the standard plant design.

The effects of potential concrete cracking on the structural stiffness of reinforced concrete structures are considered in the development of local vibration modes as described in Subsection 3.7.2.5.

3.7.2.10 Use of Constant Vertical Static Factors

The plant design does not utilize constant vertical static factors in the seismic design. The vertical component of the seismic motion is obtained using one of the analysis methods described in Subsection 3.7.2.1. The vertical component is combined with the horizontal components of the seismic motion as described in Subsection 3.7.2.6.

3.7.2.11 Method Used to Account for Torsional Effects

The seismic analyses of seismic category I buildings and structures incorporate the torsional DOF in the mathematical models, as discussed in Subsection 3.7.2.3.

The torsional effect is included in accordance with SRP 3.7.2 Section II (Reference 3.7-16) in the design of all seismic category I and II structures by use of the following process:

- The horizontal mass properties, center of rigidity, and the corresponding nodal accelerations, are computed in order to determine the inertial torsional moments. These computations are performed separately for each floor elevation of the building lumped mass stick models that are used for seismic analysis, which are described in Subsection 3.7.2.3.
- The accidental torsional moments are computed by determining an additional building torsion equal to story shear force with a moment arm of +/- 5% of the plan dimension of the floor perpendicular to the direction of the applied motion. This computation is performed for both horizontal directions.
- The accidental torsional moments due to eccentricities of the masses at each floor elevation are assumed to act in the same direction on each structure unless otherwise demonstrated in the seismic analysis. Both positive and negative accidental torsional moments are considered in the design of building structures in order to capture worst case effects.
- The accidental torsional moment is combined with the inertial torsional moment. This is computed conservatively so that the combined torsional moment is additive for each floor elevation. The combined torsional moment is distributed to the resisting structural elements in proportion to their relative stiffnesses.

The methods and approaches used to capture torsional effects in seismic category I buildings are described further in Subsection 3.7.2.3.

3.7.2.12 Comparison of Responses

The major seismic category I structures are analyzed using time history analysis methods.

As described in Subsection 3.7.1.1, the time history analyses are based on design ground motion time histories which have been synthesized from seed recorded time histories and meet the requirements of "Acceptance Criteria, Design of Time History Option 1: Single Set of Time Histories, Approach 2", NUREG-0800, SRP 3.7.1, Section II (Reference 3.7-10). ~~As described in Subsection 3.7.1.1, the time history analyses are based on design ground motion time histories which have been artificially synthesized and meet the requirements of "Acceptance Criteria, Design Time History Option 1: Single Set of Time Histories, Approach 2", NUREG-0800, SRP 3.7.1, Section II (Reference 3.7-10).~~ Since only a time history analysis method is used, comparison of the responses between the response spectrum method and a time history analysis method, as per SRP Section 3.7.2.II.12 (Reference 3.7-16), is not applicable.

3.7.2.13 Methods for Seismic Analysis of Dams

The US-APWR standard plant design does not include dams. It is the responsibility of the COL Applicant to perform any site-specific seismic analysis for dams that may be required.

3.7.2.14 Determination of Dynamic Stability of Seismic Category I Structures

Based on NUREG-0800, SRP 3.8.5 (Reference 3.7-34), for all structures, for load combinations involving SSE loads, a minimum factor of safety of 1.1 against overturning and sliding under the worst condition of loading is provided. If an OBE value is chosen to be greater than 1/3 of the site-specific SSE for the design of site-specific seismic category I structures, then load combinations involving the site-specific OBE must have a minimum factor of safety of 1.5 against overturning and sliding.

The US-APWR standard plant design is based on the assumption, as discussed in Chapter 2, that there is no potential for liquefaction of the supporting media. In order to verify the dynamic stability of US-APWR standard plant and site-specific seismic category I structures, site-specific investigations are performed of the supporting media as described in Subsection 2.5.4.8 to verify that there is no potential for liquefaction. The site-specific factor of safety against liquefaction is determined to confirm the dynamic stability of seismic category I structures for the US-APWR standard design with respect to liquefaction.

3.7.2.15 Analysis Procedure for Damping

The analysis procedure of damping in the various elements of the soil-structure system model has been discussed in Subsections 3.7.1.2, 3.7.2.3, and 3.7.2.4.

3.7.3 Seismic Subsystem Analysis

This section addresses seismic analysis of civil structure-related seismic category I subsystems, which are analyzed in accordance with NUREG-0800, SRP 3.7.3 (Reference 3.7-35). The civil structure-related subsystems are accounted for in the global seismic models of the seismic category I building structures described in Subsection 3.7.2.3 by considering the mass and mass distribution of the subsystems in the models. However, seismic analysis of the subsystems are ~~has~~ generally ~~been~~ performed separately because the subsystems do not contribute to the building stiffness and because the seismic responses of the buildings (ISRS as discussed in Subsection 3.7.2.5) serve as the seismic design input motion for the subsystems. SSCs that are seismically analyzed as civil structure-related subsystems include:

3.7.4 Seismic Instrumentation

The proposed seismic instrumentation program for the US-APWR is in accordance with NUREG-0800, SRP 3.7.4 (Reference 3.7-39) and all aspects of 10 CFR 50, Appendix S (Reference 3.7-7), which requires that "suitable instrumentation must be provided so that the seismic response of nuclear power plant features important to safety can be evaluated promptly after an earthquake." Appendix S of 10 CFR 50 (Reference 3.7-7) also requires a shutdown of the plant if vibratory ground motion exceeding that of the OBE ground motion occurs, or significant plant damage occurs.

3.7.4.1 Comparison with Regulatory Guide 1.12

The proposed seismic instrumentation program is generally in accordance with RG 1.12 and RG 1.166 (References 3.7-40, 3.7-41), and consistent with the methodology used for seismic analysis that is discussed in Subsection 3.7.2. The seismic design of US-APWR standard plant is based on site-independent seismic response analysis of basemat resting on the surface of elastic half-space that is subjected to a control motion. The site independent OBE is defined as 1/3 of the CSDRS presented in Subsection 3.7.1.1. Verification of the site-independent standard design is performed during seismic analyses that consider site-specific conditions, such as soil layering, basemat embedment, water table depth etc. FIRS, which are developed from site-specific GMRS, define the site-specific control design motion.

The criteria that define the vibratory motion that requires the shutdown of the US-APWR plant are based on the site-specific OBE. The 5% damping FIRS associated with the site-specific OBE must be enveloped by 1/3 of the 5% damping CSDRS. The conditions that require a shutdown of the US-APWR plant are defined by the site-specific OBE ~~ISRS~~ at the free-field instrumentation located at grade in the plant yard, unless otherwise justified by the COL Applicant ~~locations of seismic instrumentation~~. Unless site-specific OBE is set at 1/3 of the site-specific SSE or lower, these spectra shall be obtained from ~~SSI~~ analysis using as input the site-specific OBE ground motion ~~FIRS~~ and properties of the supporting media that are strain-compatible to the site-specific OBE ground motion. When the site-specific OBE is equal or lower than 1/3 of site-specific SSE, the spectra scaled from the 5% damping site-specific SSE response spectra may be used directly for OBE exceedance checks. ~~The measured response spectra at each of the instrumentation locations in Subsection 3.7.4.2 are compared against the corresponding site-specific OBE instructure acceleration and velocity response spectra~~ An OBE exceedance check is performed in accordance with Section 4 of RG 1.166 (Reference 3.7-41) using both a response spectrum check and a cumulative absolute velocity (CAV) check. The comparison evaluation is to be performed within 4 hours of the earthquake using data obtained from the three components of the earthquake motion as defined by the three orthogonal axes of the standard plant (two horizontal and one vertical) on the uncorrected earthquake records. The evaluation is also to include a check on the operability of the seismic instrumentation as mandated by Section 4.3 of RG 1.166 (Reference 3.7-41).

The locations of seismic monitors for the US-APWR standard plant are provided in Subsection 3.7.4.2. The COL Applicant shall provide free-field seismic instrumentation in the vicinity of the power block area at surface grade, which shall be used for shutdown determination, unless otherwise justified. ~~is to verify the site-specific applicability of these monitors, and determine if there is a need for the installation of additional instrumentation for the measurement of the free-field ground motion~~ Any such

justification shall be based on conditions and requirements specific to the site, and shall include justification for evaluation of OBE exceedance~~. The CAV is based on criteria for exceedance of OBE using measurements taken in the free-field, however the OBE exceedance can be evaluated by~~ using only measurements from instrumentation installed on the buildings and the structures of the US-APWR standard plant. ~~The seismic instrumentation for monitoring the free-field ground motion is not specifically required since both the site-independent and site-specific design are based on control motions that are defined at the bottom of the basemats. The response spectra of the free-field ground motion are not directly relevant to the design of the US-APWR standard plant nor are directly comparable to the design input ground motion as defined by the CSDRS and FIRS in Subsection 3.7.1.1.~~

The calculation of the CAV is performed in the manner provided in Electric Power Research Institute (EPRI) Report TR-100082 (Reference 3.7-42). As stated in RG 1.166 (Reference 3.7-41), the range of the spectral velocity limit should be 1.0 to 2.0 Hz which is different than that recommended by EPRI. In accordance with RG 1.166 (Reference 3.7-41), for each component of the free-field ground motion, the CAV should be calculated as follows: (1) the absolute acceleration (g units) time-history is divided into 1-second intervals, (2) each 1-second interval that has at least 1 exceedance of 0.025 g is integrated over time, (3) all the integrated values are summed together to arrive at the CAV. The approaches in EPRI Report NP-5930 (Reference 3.7-43) and EPRI Report TR-100082 (Reference 3.7-42) provide additional guidance on determining the CAV.

~~Acceleration and velocity spectra can be calculated from the measurement of free-field ground motion in order to set additional conditions for OBE exceedance in addition to the CAV check. The site-specific OBE is exceeded only if all of the following three conditions identified in RG 1.166 (Reference 3.7-41)~~ The site-specific OBE is exceeded and plant shutdown is required in accordance with the criteria of RG 1.166 (Reference 3.7-41), if the first of the following three conditions in combination with either the second or third conditions are met:

1. Any calculation of CAV described above yields a value that is greater than 0.16 g-second.
2. 5% damping ARS generated by free-field ground motion ARS are higher than 0.2 g at frequencies between 2 and 10 Hz, or higher than the site-specific OBE ARS between 2 and 10 Hz, whichever is greater.
3. 5% damping velocity response spectra generated by free-field ground motion are higher than 6 in./sec at frequencies between 1 and 2 Hz, or higher than the site-specific OBE velocity response spectra between 1 and 2 Hz, whichever is greater.

If free-field instrumentation is not used, the criteria of RG 1.166 Appendix A are used for OBE exceedance checks, it is assumed that the checks of CAV and free-field ground spectra are exceeded, and shutdown of the plant is required if the 5% damping spectra are exceeded at any of the in-structure instrumentation. ~~The shutdown of the plant is required only if all three of the above conditions are met and any of the 5% damping ARS obtained from the measurements of the instructure accelerations exceed the OBE spectra at the corresponding location. If the free-field ground motion is not measured, it is conservatively assumed that the checks of CAV and free-field ground accelerations and velocities are exceeded.~~

Additionally, low-level seismic effects would be included in the design of certain equipment potentially sensitive to a number of such events, based on a percentage of the responses calculated for the SSE.

3.7.4.2 Location and Description of Instrumentation

Consistent with the guidance of RG 1.12 (Reference 3.7-40), the seismic instrumentation for the US-APWR standard plant is solid-state multi-channel digital instrumentation with computerized recording and playback capability that allows the processing of data at the plant site within 4 hours of a seismic or other dynamic event.

The US-APWR triaxial time-history accelerograph consists of a centralized digital time history analyzer/recorder with multi-channel capability, which is located in a panel in a room adjacent to the plant MCR, and triaxial acceleration sensors that are provided at the following plant locations:

On the PCCV basemat, located in the R/B on the B1F level at elevation -23 ft, 4 in.

- On level 2F of PCCV at elevation 25 ft, 3 in., located in the southwest quadrant outside the steam generator and reactor coolant compartment.
- On level 4F of PCCV operating deck slab at elevation 76 ft, 5 in., located in the southwest quadrant outside the steam generator and reactor coolant compartment underneath the access stairs adjacent to the west PCCV buttress.
- On the basemat of the east PS/B on the B1F level at elevation -23 ft, 4 in., in the non safety-related turbine generator anteroom.
- On level 1F of the east PS/B at elevation 3 ft, 7 in., in the non safety-related turbine generator control room.
- Unless otherwise justified by the COL Applicant based on site-specific conditions, at a surface grade location in the vicinity of the power block area, sufficiently far away from structures in order to appropriately measure free-field ground motion.

The locations listed above correlate to structural elements in the structures which have been modeled as mass points in the dynamic analysis so that the measured motion can be directly compared to the design spectra. The instrumentation mounted at the locations listed above is not mounted on equipment, piping, supports, or secondary structural frame members. These locations have been reviewed in accordance with RG 8.8 (Reference 3.7-44) and determined to be consistent with maintaining dose rates as low as practical and maintaining occupational radiation exposures as low as is reasonably achievable for access and maintenance of the instrumentation.

A time-history analyzer/recorder is provided which has the capability to provide pre-event recording time of 3 seconds minimum and post-event recording time of 5 seconds minimum, and to record at least 25 minutes of sensed motion. The recorder portion of the time-history analyzer is to have the capability of a sample rate of at least 200 samples per second in each of the three orthogonal directions of the plant, a bandwidth of 0.20 Hz to 100 Hz, and a dynamic range of 1,000:1 zero to peak. The triaxial acceleration sensors are to have the same dynamic range as the time-history analyzer recorder and a frequency range of 0.20 Hz to 100 Hz. The triggers of the tri-axial acceleration sensor units are to be capable of being set within the range of 0.001g to 0.02g. Batteries are provided with enough capacity for a minimum of 25 minutes of

system operation at any time over a 24-hour period, without recharging, in combination with a battery charger whose line power is connected to an uninterruptible power supply.

The seismic instrumentation serves no safety-related function and, therefore, has no nuclear safety design requirements. However, its design and location are in accordance with RG 1.12 (Reference 3.7-40), which requires that the seismic instrumentation:

- will not be affected by the failure of adjacent SSCs during an earthquake;
- will operate during all modes of plant operation, including periods of plant shutdown; and
- is protected as much as practical against accidental impacts.

As required by RG 1.12 (Reference 3.7-40), the seismic instrumentation is rigidly mounted and oriented so that the horizontal components are parallel to the horizontal axes of the standard plant used in the seismic analyses. These features of the seismic monitoring instrumentation are obtained by qualifying the equipment to IEEE Std 344-1987 (Reference 3.7-25); the seismic qualification program is discussed in Section 3.10.

3.7.4.3 Control Room Operator Notification

The US-APWR standard plant is designed such that triggering of the instrumentation described above is annunciated in the MCR of the plant. For sites which will have more than one US-APWR unit, only one unit is required to have seismic instrumentation, provided that the anticipated seismic response at each of the units is considered essentially the same and provided that annunciation is provided at all unit MCRs. The COL Applicant is to determine from the site-specific geological and seismological conditions if multiple US-APWR units at a site will have essentially the same seismic response, and based on that determination, choose if more than one unit is provided with seismic instrumentation at a multiple-unit site.

3.7.4.4 Comparison with Regulatory Guide 1.166

~~In accordance with RG 1.166 (Reference 3.7-41), it can be assumed that the checks of CAV and free-field ground accelerations and velocities are exceeded so the US-APWR standard plant does not have to rely upon seismic instrumentation located in the free-field for checks of OBE exceedance.~~ As previously discussed in Subsection 3.7.4.1, the seismic instrumentation and OBE exceedance checks meet the intent of RG 1.166 (Reference 3.7-41). In the case that the COL Applicant provides acceptable justification for not utilizing free-field instrumentation, the OBE exceedance checks can be performed using only uncorrected earthquake data for the three orthogonal plant directions (two horizontal and one vertical) obtained from seismic instrumentation installed at five plant locations (two basemat locations and three upper level locations as described in Subsection 3.7.4.2). It should be noted that the use of five instrument locations is more conservative than the interim OBE exceedance guidelines given in Appendix A of RG 1.166 (Reference 3.7-41), which allow basemat-level only instrumental checks.

The seismic instrumentation program must be in accordance with the guidelines of RG 1.166 (Reference 3.7-41) and EPRI NP-6695 (Reference 3.7-45) which are summarized as follows:

COL3.7(5) The COL Applicant is to assure that the horizontal FIRS defining the site-specific SSE ground motion at the bottom of seismic category I or II basemats envelope the minimum response spectra required by 10 CFR 50, Appendix S, and the site-specific response spectra obtained from the response analysis.

COL3.7(6) The COL Applicant is to develop site-specific GMRS and FIRS by an analysis methodology, which accounts for the upward propagation of the GMRS. The FIRS are compared to the CSDRS to assure that the US-APWR standard plant seismic design is valid for a particular site. If the FIRS are not enveloped by the CSDRS, the US-APWR standard plant seismic design is modified as part of the COLA in order to validate the US-APWR for installation at that site.

COL3.7(7) The COL Applicant is to determine the allowable static and dynamic bearing capacities ~~capacity~~ based on site conditions, including the properties of fill concrete placed to provide a level surface for the bottom of foundation elevations, and to evaluate the bearing loads to these capacities~~this capacity~~.

COL3.7(8) The soil properties may be considered strain-independent for subgrade materials with initial shear wave velocities of 3,500 ft/s or higher, to be confirmed by the COL Applicant as part of the site-specific subsurface material investigations discussed in Section 2.5.4. However, the COL Applicant must institute dynamic testing to evaluate the strain-dependent variation of the material dynamic properties for site materials with initial shear wave velocities below 3,500 ft/s.

COL3.7(9) The COL Applicant is to assure that the design or location of any site-specific seismic category I SSCs, for example pipe tunnels or duct banks, will not expose those SSCs to possible impact due to the failure or collapse of non-seismic category I structures, or with any other SSCs that could potentially impact, such as heavy haul route loads, transmission towers, non safety-related storage tanks, etc.

COL3.7(10) It is the responsibility of the COL Applicant to further address structure-to-structure interaction if the specific site conditions can be important for the seismic response of particular US-APWR seismic category I structures, or may result in exceedance of assumed pressure distributions used for the US-APWR standard plant design.

COL3.7(11) Deleted

COL3.7(12) It is the responsibility of the COL Applicant to design seismic category I below- or above-ground liquid-retaining metal tanks such that they are enclosed by a tornado missile protecting concrete vault or wall, in order to confine the emergency gas turbine fuel supply.

COL3.7(13) *The COL Applicant is to set the value of the OBE that serves as the basis for defining the criteria for shutdown of the plant, according to the site specific conditions.*

COL3.7(14) *The COL Applicant is to determine from the site-specific geological and seismological conditions if multiple US-APWR units at a site will have essentially the same seismic response, and based on that determination, choose if more than one unit is provided with seismic instrumentation at a multiple-unit site.*

COL3.7(15) *Deleted*

COL3.7(16) *The COL Applicant shall provide free-field seismic instrumentation in the vicinity of the power block area at surface grade which shall be used for shutdown determination, unless otherwise justified. Any such justification shall be based on conditions and requirements specific to the site, and shall include justification for evaluation of OBE exceedance using only measurements from instrumentation installed on the buildings and the structures of the US-APWR standard plant.* ~~*The COL Applicant is to verify the site-specific applicability of these monitors, and determine if there is a need for the installation of additional instrumentation for the measurement of the free-field ground motion based on conditions and requirements specific to the site.*~~

COL3.7(17) *Deleted*

COL3.7(18) *Deleted*

COL3.7(19) *The COL Applicant is to identify the implementation milestone for the seismic instrumentation implementation program based on the discussion in Subsections 3.7.4.1 through 3.7.4.5.*

COL3.7(20) *The COL Applicant is to validate the site-independent seismic design of the standard plant for site-specific conditions, including geological, seismological, and geophysical characteristics, and to develop the site-specific GMRS as free-field outcrop motions on the uppermost in-situ competent material.*

COL3.7(21) *The COL Applicant is responsible for the seismic design of those seismic category I and seismic category II SSCs that are not part of the US-APWR standard plant.*

COL3.7(22) The COL Applicant is required to perform site-specific seismic analyses, including SSI analysis which may consider~~s~~ seismic wave transmission incoherence and analysis of the CAV of the seismic input motion, in order to determine if high-frequency exceedances of the CSDRS could be transmitted to SSCs in the plant superstructure with potentially damaging effects.

COL3.7(23) The COL Applicant is to verify that the results of the site-specific SSI analysis for the broadened ISRS and basement walls lateral soil pressures are enveloped by the US-APWR standard design.

COL3.7(24) The COL Applicant is to verify that the site-specific ratios V/A and AD/V^2 (A, V, D, are PGA, ground velocity, and ground displacement, respectively) are consistent with characteristic values for the magnitude and distance of the appropriate controlling events defining the site-specific uniform hazard response spectra.

COL3.7(25) The COL Applicant referencing the US-APWR standard design is required to perform a site-specific SSI analysis for the R/B-PCCV-containment internal structure utilizing the program ACS-SASSI SSI Version 2.2 (Reference 3.7-17) which contains time history input incoherence function capability. The SSI analysis using SASSI is required in order to confirm that site-specific effects are enveloped by the standard design. After the SASSI analysis is first performed for a specific unit, subsequent COLAs for other units may be able to forego SASSI analyses if the FIRS and GMRS derived for those subsequent units are much smaller than the US-APWR standard plant CSDRS, and if the subsequent unit can also provide justification through comparison of site-specific geological and seismological characteristics.

COL3.7(26) SSI effects are also considered by the COL Applicant in site-specific seismic design of any seismic category I and II structures that are not included in the US-APWR standard plant. Consideration of structure-to-structure interaction is discussed in Subsection 3.7.2.8. The site-specific SSI analysis is performed for buildings and structures including, but not limited to, to the following:

- *Seismic category I ESWPT*
- *Seismic category I PSFSV*
- *Seismic category I UHSRS*

COL3.7(27) It is the responsibility of the COL Applicant to perform any site-specific seismic analysis for dams that may be required.

3.7-22 Rules for Construction of Overhead and Gantry Cranes (Top Running Bridge, Multiple Girder), American Society of Mechanical Engineers, ASME-NOG-1 (i.e., Nuclear Overhead Gantry), New York, 2004.

3.7-23 Quality Assurance Requirements for Nuclear Facility Applications, The American Society of Mechanicals Engineers, NQA-1-2004, New York, New York, December 2004.

3.7-24 Minimum Design Loads for Buildings and Other Structures, American Society of Civil Engineers/Structural Engineering Institute, ASCE/SEI 7-05, Reston, VA, 2006.

3.7-25 IEEE Recommended Practice for Seismic Qualification of Class 1E Equipment for Nuclear Power Generating Stations, IEEE Std 344-1987, The Institute of Electrical and Electronics Engineers, Inc, New York, New York, 1987.

3.7-26 Development of Floor Design Response Spectra for Seismic Design of Floor-Supported Equipment or Components, Regulatory Guide 1.122, Rev.1, U.S. Nuclear Regulatory Commission, Washington, DC, February 1978.

3.7-27 Combining Responses and Spatial Components in Seismic Response Analysis, Regulatory Guide 1.92, Rev.2, U.S. Nuclear Regulatory Commission, Washington, DC, July 2006.

3.7-28 Combining Responses and Spatial Components in Seismic Response Analysis, Regulatory Guide 1.92, Rev.1, U.S. Nuclear Regulatory Commission, Washington, DC, February 1976.

3.7-29 PEPIPESTRESS Theory Manual, Rev.0, May 1988.

3.7-30 International Building Code, International Building Code Council, Inc., Country Club Hills, IL, 2006.

3.7-31 Code Requirements for Nuclear Safety-Related Concrete Structures, ACI 349-01, American Concrete Institute, 2001.

3.7-32 Specification for the Design, Fabrication and Erection of Steel Safety-Related Structures for Nuclear Facilities, ANSI/AISC N690-1994 including Supplement 2 (2004), American National Standards Institute/American Institute of Steel Construction, 1994 & 2004.

3.7-33 Deleted. ~~Enhanced Information for PS/B Design, MUAP-08002 Rev. 0, February 2008.~~

3.7-34 Foundations, Standard Review Plan for the Review of Safety Analysis Reports for Nuclear Power Plants. NUREG-0800, SRP 3.8.5, Rev.2, U.S. Nuclear Regulatory Commission, Washington, DC, March 2007.

3.7-35 Seismic Subsystem Analysis, Standard Review Plan for the Review of Safety Analysis Reports for Nuclear Power Plants. NUREG-0800, United States Nuclear Regulatory Commission Standard Review Plan 3.7.3, Revision 3, March 2007.

3.7-36 Hyde, S.J., J.M. Pandya, and K.M. Vashi, Seismic Analysis of Auxiliary Mechanical Equipment in Nuclear Plants, Dynamic and Seismic Analysis of Systems and Components, ASME-PVP-65, American Society of Mechanical Engineers, Orlando, Florida, 1982.

3.7-37 Lin, C.W., T.C. Esselman, Equivalent Static Coefficients for Simplified Seismic Analysis of Piping Systems, SMIRT Conference 1983, Paper K12/9.

3.7-38 Independent Support Motion (ISM) Method of Modal Spectra Seismic Analysis, Task Group on Independent Support Motion as Part of the PVRC Technical Committee on Piping Systems, December 1989.

3.7-39 Seismic Instrumentation, Standard Review Plan for the Review of Safety Analysis Reports for Nuclear Power Plants. NUREG-0800, United States Nuclear Regulatory Commission Standard Review Plan 3.7.4, Revision 2, March 2007.

3.7-40 Nuclear Power Plant Instrumentation for Earthquakes, Regulatory Guide 1.12, Rev.2, U.S. Nuclear Regulatory Commission, Washington, DC, March 1997.

3.7-41 Pre-Earthquake Planning and Immediate Nuclear Power Plant Operator Post-Earthquake Actions, Regulatory Guide 1.166, U.S. Nuclear Regulatory Commission, Washington, DC, March 1997.

3.7-42 Standardization of the Cumulative Absolute Velocity, Electric Power Research Institute TR-100082, December 1991.

3.7-43 A Criterion for Determining Exceedance of the Operating Basis Earthquake, Electric Power Research Institute NP-5930, July 1988.

3.7-44 Information Relevant to Ensuring that Occupational Radiation Exposures at Nuclear Power Stations Will Be as Low as Is Reasonably Achievable, Regulatory Guide 8.8, Rev.3, U.S. Nuclear Regulatory Commission, Washington, DC, June 1978.

3.7-45 Guidelines for Nuclear Plant Response to an Earthquake, Electric Power Research Institute NP-6695, December 1989.

3.7-46 Evaluation of Other Dynamic Loads and Load Combinations, NUREG-1061, Volume 4, U. S. Nuclear Regulatory Commission Piping Review Committee, December, 1984.

3.7-47 Seismic Design Bases of the US-APWR Standard Plant, MUAP-10001, Revision 2, Mitsubishi Heavy Industries, Ltd., December 2010.

3.7-48 Soil-Structure Interaction Analyses and Results for the US-APWR Standard Plant, MUAP-10006, Revision 1, Mitsubishi Heavy Industries, Ltd., December 2010.

Table 3.7.1-3 Major Dimensions of Seismic Category I Structures(1)

Structure	Basemat Embedment Depth Below Grade (ft)	Basemat Width and Length (ft)	Max. Structure Height
R/B	~~26’-8”/~~38’-10”	210’ x 309’(3)	190’ - 9”
PCCV	See note 2.	See note 2.	268’ - 3”
Containment Internal Structure	See note 2.	See note 2.	175’-9” ~~139’-6”~~ (top of pressurizer compartment)
PS/B	38’-10” ~~37’-3”~~	66’ x 111’-6”(3) ~~71’ x 117’~~	87’-4” ~~51’-11”~~

Notes:

1. The dimensions shown are approximate and are based on the general arrangement drawings in Section 1.2.
2. The R/B, PCCV, and containment internal structure rest on a common basemat as shown on the general arrangement drawings in Section 1.2.
3. Width and length ~~height~~ are the distances between column lines of exterior walls.

Table 3.7.1-4 Comparison of 5% Damping ARS of Synthesized ~~Artificial~~ Time History ~~Histories with 5% Damping~~ CSDRS

Time History	**Frequency Range**	**0.1 ~~0.25~~ – 1 Hz**	**1 – 10 Hz**	**10 – 100 Hz**	**0.1 ~~0.25~~ – 100 Hz**
	No. Freq. Data Points	**100 ~~75~~**	**100**	**100**	**300 ~~275~~**
H1 Horizontal	ARS/CSDRS ratio Min.	0.942 ~~0.894~~	0.937 ~~0.942~~	0.920 ~~0.993~~	0.920 ~~0.894~~
	ARS/CSDRS ratio Max	1.251 ~~1.105~~	1.262 ~~1.121~~	1.218 ~~1.166~~	1.262 ~~1.166~~
	Max. No. of Data Point Non-Exceedances Within Any One Particular Frequency Window (1)	1 ~~10~~	4 ~~2~~	7 ~~1~~	7 ~~10~~
H2 Horizontal	ARS/CSDRS ratio Min.	0.898 ~~0.888~~	0.94 ~~0.958~~	0.968 ~~0.994~~	0.898 ~~0.888~~
	ARS/CSDRS ratio Max	1.292 ~~1.232~~	1.142 ~~1.173~~	1.126 ~~1.141~~	1.292 ~~1.232~~
	Max. No. of Data Point Non-Exceedances Within Any One Particular Frequency Window (1)	7 ~~10~~	6 ~~2~~	6 ~~1~~	7 ~~10~~
V Vertical	ARS/CSDRS ratio Min.	0.942 ~~0.877~~	0.931 ~~0.901~~	0.966 ~~1.000~~	0.931 ~~0.877~~
	ARS/CSDRS ratio Max	1.206 ~~1.215~~	1.212 ~~1.165~~	1.82 ~~1.296~~	1.212 ~~1.296~~
	Max. No. of Data Point Non-Exceedances Within Any One Particular Frequency Window (1)	6 ~~7~~	3 ~~4~~	6 ~~0~~	6 ~~7~~

Note:

1. Maximum number of frequency data points in any one particular sequence (frequency window) for which the acceleration values of the time histories ARS are below those of the CSDRS. ~~See Subsection 3.7.1.1 for further discussion of the non-exceedances shown above.~~

Table 3.7.1-5 Duration of Motion of US-APWR ~~Artificial~~ Time Histories with Respect to Arias Intensity

	Arias Intensity		Duration (seconds)
	Time for 5% (seconds)	Time for 75% (seconds)	
H1	3.94 ~~2.71~~	11.46 ~~11.55~~	7.52 ~~8.84~~
H2	4.635 ~~2.14~~	11.78 ~~11.25~~	7.14 ~~9.12~~
V	2.08 ~~1.84~~	10.84 ~~11.20~~	8.77 ~~9.36~~

Table 3.7.1-6 Generic Soil Profile Categories

Category (Initial V_s [in top 30m])	Depth to Rock* (ft) for each Category (ft)
270 m/s	200 500
560 m/s	100 200 500
900 m/s	100 200
2,032 m/s	100

* For soil and soft rock profiles 270 m/sec and 560 m/sec, underlying baserock conditions reflect soft rock with a shear-wave velocity of 1 km/sec. For firm rock profiles 900 m/sec and 2,032 m/sec, underlying baserock conditions reflect hard rock with a shear-wave velocity of 2.83 km/sec.

Table 3.7.2-1 Summary of Dynamic Analysis and Combination Techniques

Summary of Dynamic Analyses & Combination Techniques				
Model	**Analysis Method**	**Program**	**Three Components Combination (for purposes of dynamic analysis)**	**Modal Combination**
Three-dimensional R/B-PCCV-containment internal structure SSI ~~Lumped Mass Stick~~ Model (1~~4~~)	~~Direct Integration~~ Time History Analysis	SASSI ~~ANSYS~~	SRSS	N/A
Three-dimensional RCL-R/B-PCCV-containment internal structure FE Model (2 ~~1~~)	Time History Analysis in Frequency Domain	ANSYS	N/A (1)	N/A
Three-dimensional PS/B SSI Model(3) ~~Three-dimensional RCL Piping FE Model (2)~~	~~Direct Integration~~ Time History Analysis in Frequency Domain using sub-structuring technique	SASSI ~~ANSYS~~	SRSS	N/A
Three-dimensional PS/B~~s~~ FE model(2) ~~Lumped Mass Stick Models (3)~~	~~Direct Integration~~ Time History Analysis in Frequency Domain	ANSYS	N/A(2) ~~SRSS~~	N/A
~~Three-dimensional RCL-R/B-PCCV-containment internal structure Lumped Mass Stick Model~~	~~Direct Integration Time History Analysis~~	~~ANSYS~~	~~SRSS~~	~~N/A~~

Notes:

1. The three-dimensional RCL-R/B-PCCV-containment internal structure SSI model is addressed in Technical Reports MUAP-10001 and MUAP-10006 (References 3.7-47 and 3.7-48). ~~The FE model for the R/B-PCCV-containment internal structure on their common basemat is used only for validation of the dynamic lumped mass stick models and for static analysis for design of structural members and components as addressed in Section 3.8.~~

2. The FE models for the RCL-R/B-PCCV-containment internal structure on their common basemat and the PS/Bs are used only for validation of the seismic models and for static analysis for design of structural members and components as addressed in Section 3.8. ~~The FE model for the RCL is addressed in a Technical Report (Reference 3.7-18).~~

3. The three-dimensional PS/B model is addressed in Technical Reports MUAP-10001 and MUAP-10006 (References 3.7-47 and 3.7-48). ~~The lumped mass stick models for the PS/Bs are addressed in a Technical Report (Reference 3.7-33).~~

~~4. Three-dimensional RCL-R/B-PCCV-containment internal structure lumped mass stick models are addressed in a Technical Report (Reference 3.7-18).~~

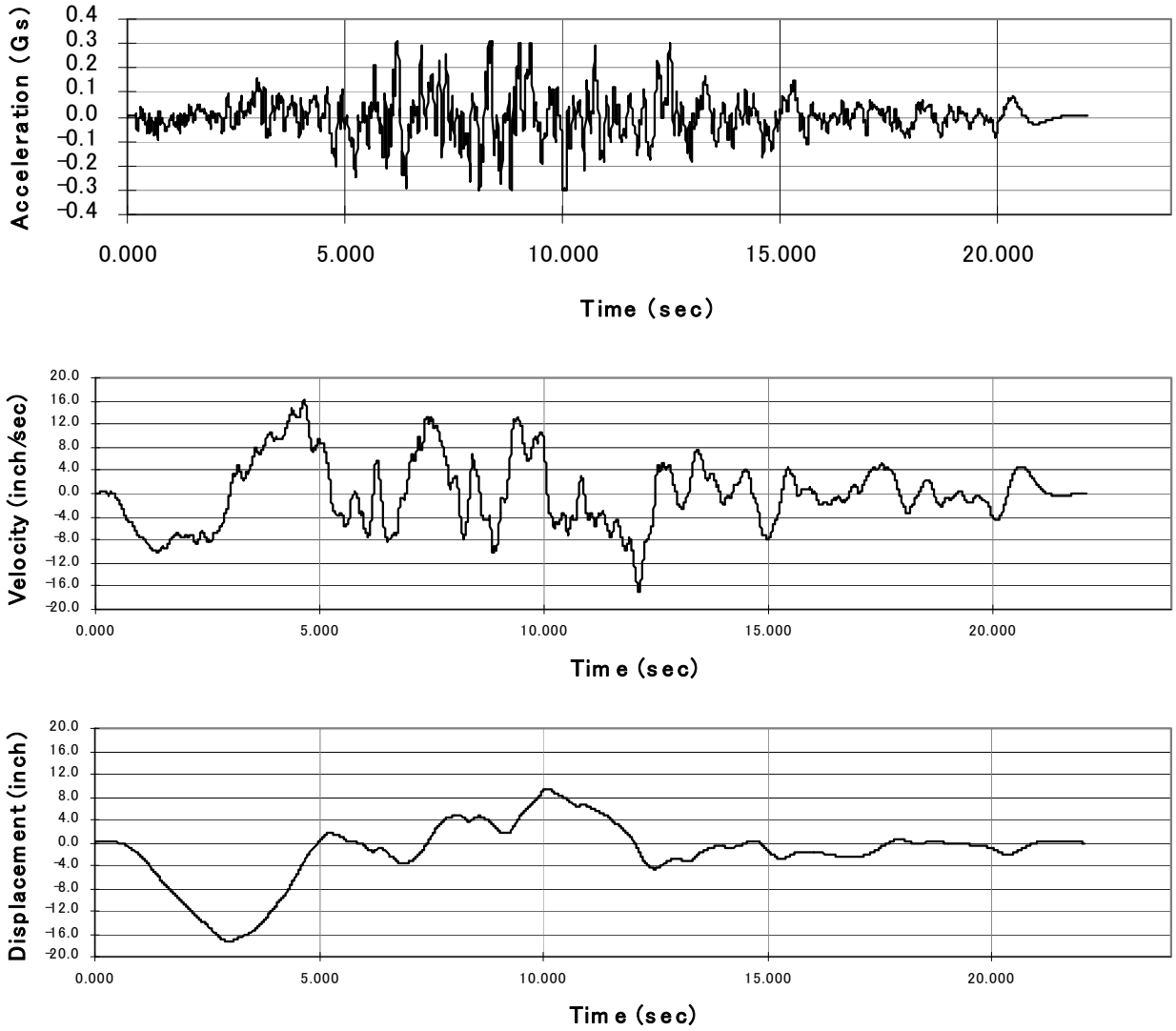

Figure 3.7.1-3 Acceleration, Velocity, and Displacement Time History for Component H1 ~~Artificial Time Histories Plots (H1)~~

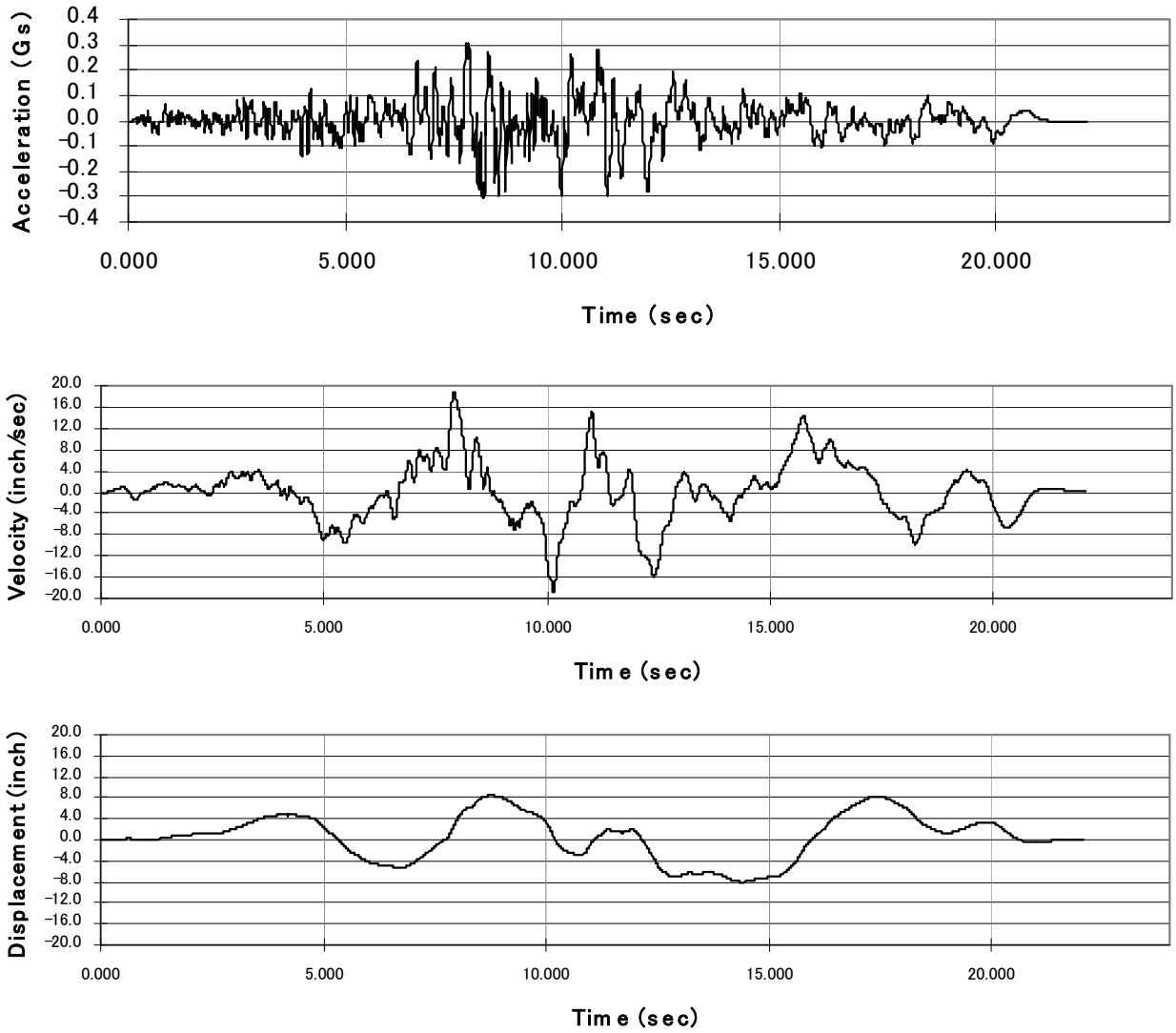

Figure 3.7.1-4 Acceleration, Velocity, and Displacement Time History for Component H2 ~~Artificial Time Histories Plots (H2)~~

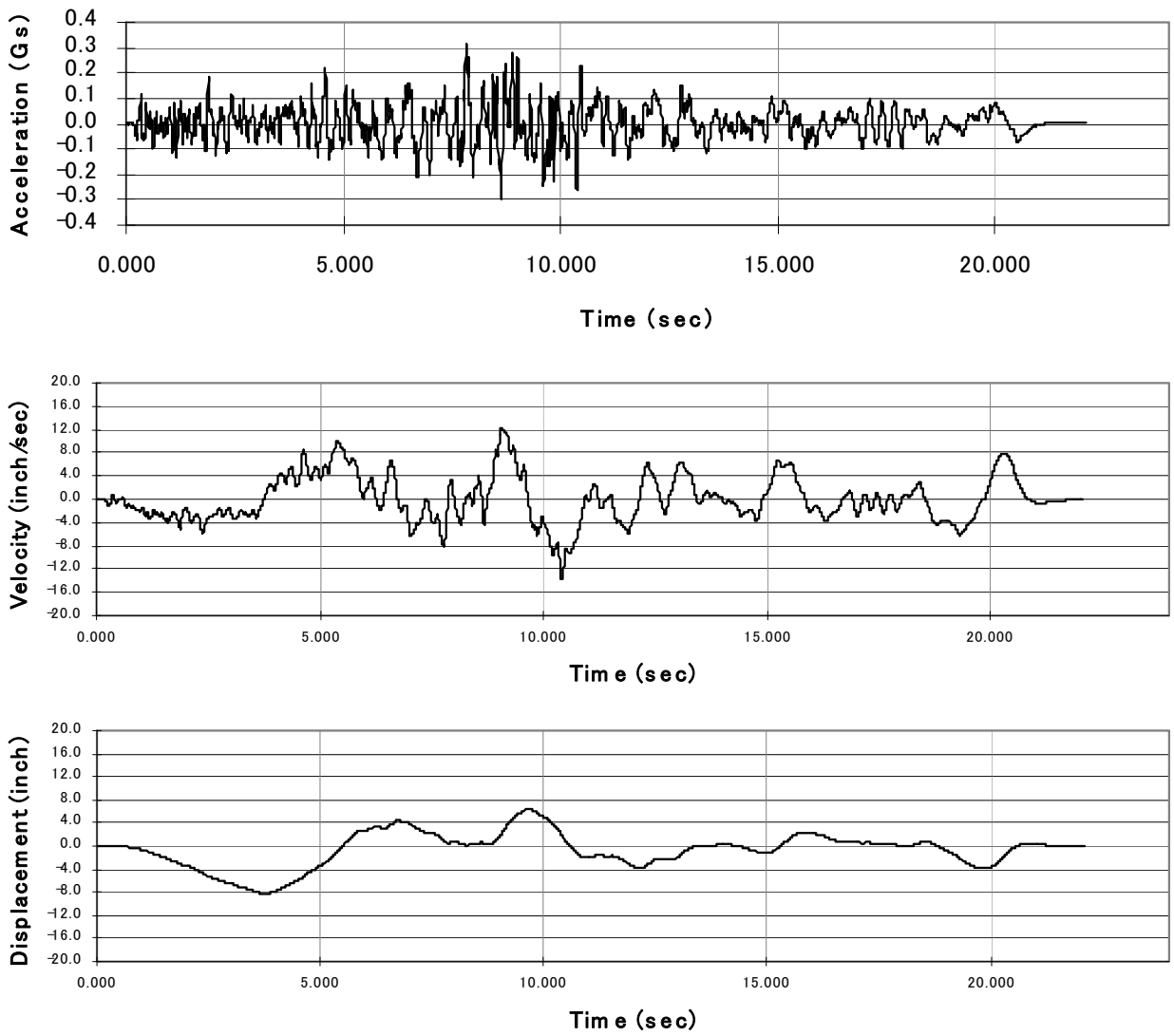

Figure 3.7.1-5 Acceleration, Velocity, and Displacement Time History for Component V ~~Artificial Time Histories Plots (V)~~

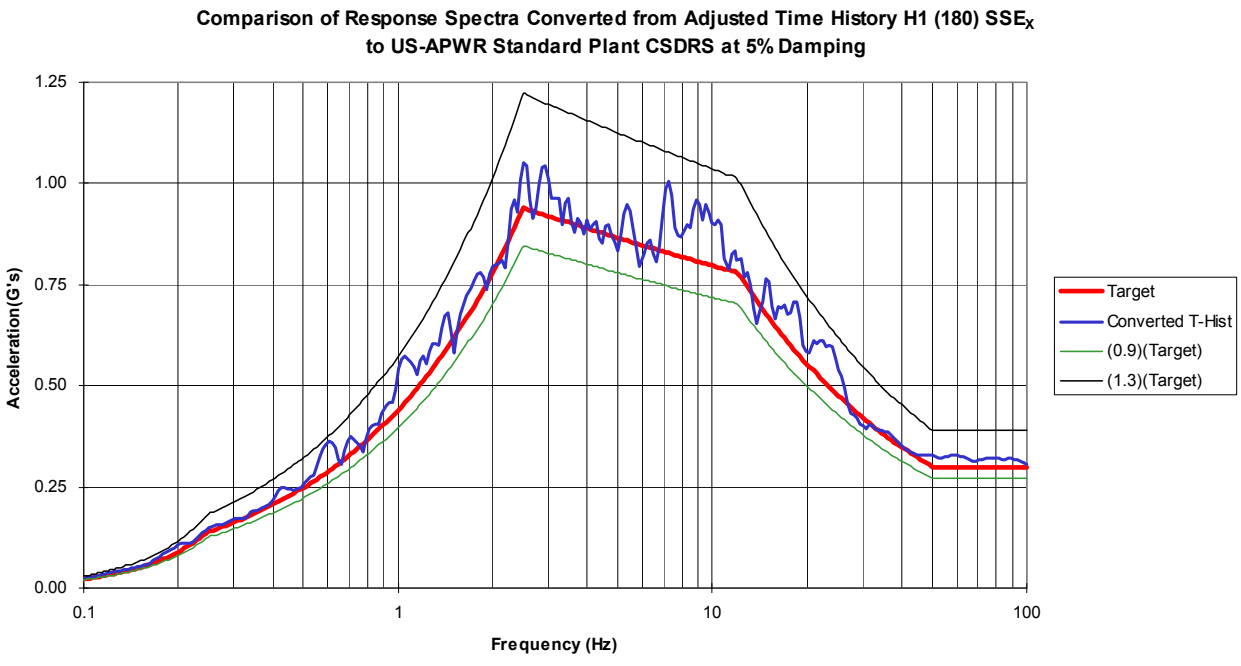

~~Note: Plot is for 5% damping. For comparison purposes the CSDRS for the north-south direction (H1) is also shown.~~

Figure 3.7.1-6 5% Damped ~~Artificial~~ Time History Response Spectra (H1)

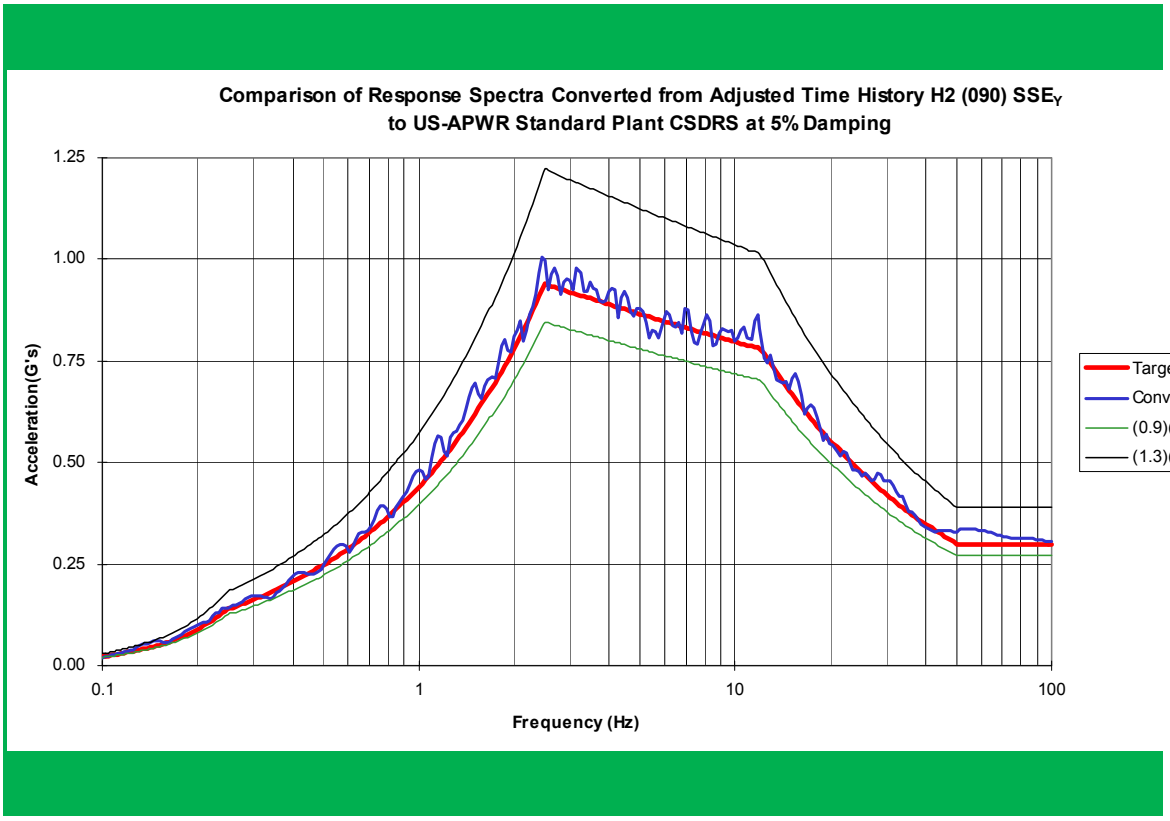

~~Note: Plot is for 5% damping. For comparison purposes the CSDRS for the east west direction (H2) is also shown.~~

Figure 3.7.1-7 5% Damped ~~Artificial~~ Time History Response Spectra (H2)

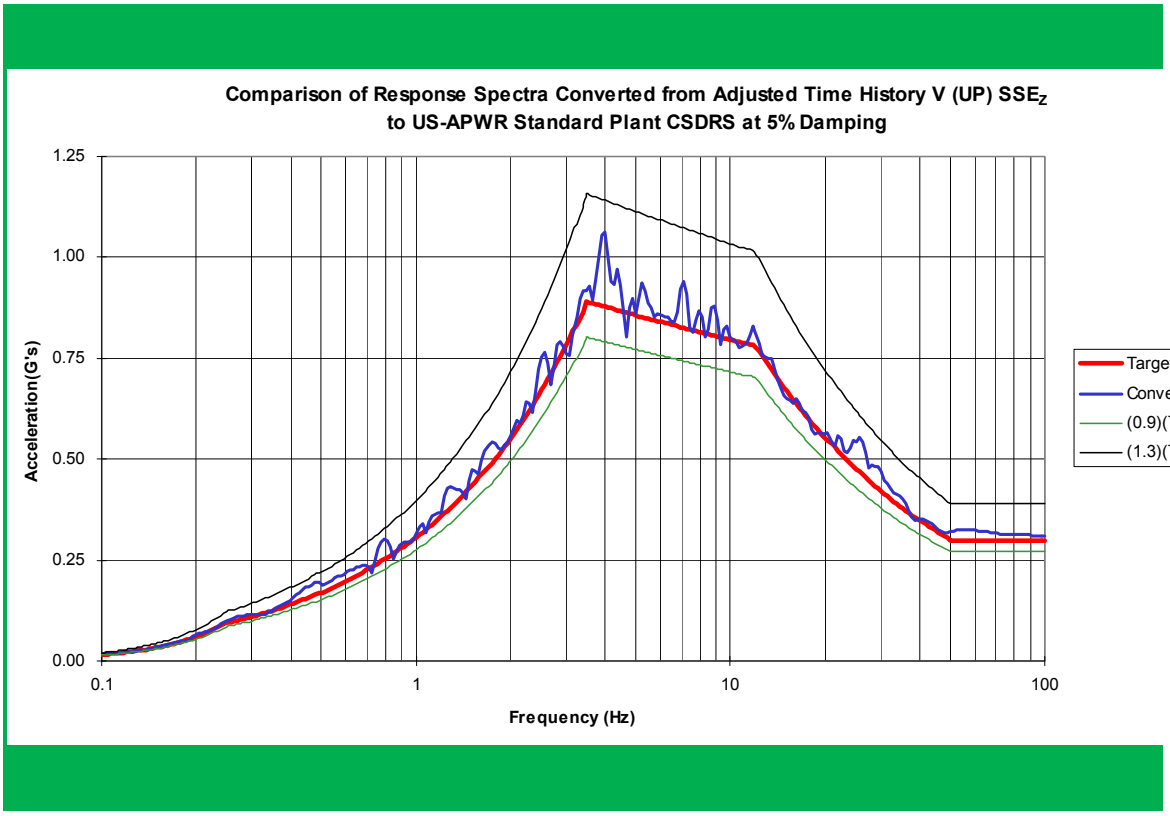

~~Note: Plot is for 5% damping. For comparison purposes the CSDRS for vertical direction (V) is also shown.~~

Figure 3.7.1-8 5% Damped ~~Artificial~~ Time History Response Spectra (V)

Accident pressure has little effect on the liner plate since it is backed by the concrete shell which is constructed against it.

Other loads and effects for the liner, penetrations, brackets, and attachments are considered. Local thickening of the liner is provided as necessary at penetration assemblies. The liner analysis considers deviations in the liner geometry due to fabrication and erection tolerances, including secondary stresses caused by service and factored loads to the displaced shape of the liner caused during construction as discussed above. Stresses imposed by mechanical load of concrete are not included since those stresses do not pose real loads once the concrete has hardened.

The effects of anchors, embedments, or other attachment details not attached to the steel liner or a load carrying steel element that provide anchorage into the PCCV from the external surface, are considered for their effect on the PCCV. The liner is not considered as a structural member when determining overall PCCV integrity, however where necessary the liner may be considered to satisfy the requirement of 0.0020 times the gross cross-sectional area for reinforcement in each direction on the inside face of the PCCV to resist effects of shrinkage, temperature, and membrane tension.

3.8.1.4 Design and Analysis Procedures

Design and analysis procedures for structural portions of the PCCV, and specified allowable limits for stresses and strains as discussed in Subsection 3.8.1.5, are in accordance with Article CC-3000 of the ASME Code, Section III (Reference 3.8-2). The design and analysis procedures for the PCCV, including the steel liner, are according to those stipulated in Article CC-3300 of the ASME Code, Section III (Reference 3.8-2) and RG 1.136 (Reference 3.8-3). ASME Code, Section III, Article CC-3100 applies to the design of the “Concrete Containment” and the “Metallic Liner.” ASME Code, Section III (Reference 3.8-2), covers both the “Service Load Category” and the “Factored Load Category.” Loads are classified as “Primary” or “Secondary” in accordance with definitions provided by the ASME Code, Section III (Reference 3.8-2).

The PCCV analysis methods are summarized in Table 3.8.1-4. For the US-APWR, the PCCV seismic analysis includes its basemat as well as the R/B and containment internal structure. ~~For the US-APWR, which is based on a soil-spring modeling approach to represent the subgrade supporting media on a generic basis, the PCCV seismic analysis includes its basemat as well as the R/B and containment internal structure.~~ The basemat design is further described in Subsection 3.8.5, the R/B in Subsection 3.8.4, and the containment internal structure in Subsection 3.8.3. The SSI design and analysis approach is discussed further in Subsection 3.7.2.4.

The detailed PCCV analyses use general purpose global FE models. The global FE model addresses discontinuities and openings in the PCCV structure, such as the cylinder-basemat interface, cylinder-dome springline, buttress-wall interface, equipment hatch, and personnel airlock openings. Changes in material properties, changes in physical dimensions such as thicknesses, and changes in boundary or support conditions between elements are accounted for in the models. The FEs used have membrane, bending, and tangential and radial shear capability.

Computer code development, verification, validation, configuration control, and error reporting and resolution are in accordance with the Quality Assurance requirements of Chapter 17.

3.8.1.4.1 Analyses for Design Conditions

3.8.1.4.1.1 Analytical Methods

The PCCV structure is analyzed by the use of the linear elastic FE computer program ANSYS (Reference 3.8-14). The PCCV is isolated from other structures for the analysis of shell and domes stresses, however, it is supported on and anchored to a common basemat with those structures. The PCCV structure is idealized for analysis and modeled with ANSYS as a structure consisting of isoparametric membrane-bending plate elements.

The three-dimensional global FE analysis model as represented in Figures 3.8.5-7, 3.8.5-8, and 3.8.5-9 includes the overall PCCV structure, as well as the R/B, the containment internal structure and the common basemat to which all these structures are supported. The FEs used for the PCCV analyses (Figure 3.7.2-1) have membrane, bending, tangential, and radial shear capability. The model accounts for effective prestress equivalent to the variation of tendon friction due to losses or changing geometry, for example the inverted U-shape tendons' transition from cylinder to dome. In developing the model, the mesh size is chosen to comply with the following basic considerations and empirical checks.

- When considering areas, such as the main steam penetration, concentrated load, or reaction areas, the critical location for shear is generally one-half the thickness away from the opening edge and, the element size should account for this fact.
- The mesh discretization is chosen to assure adequate representation of the controlling stresses for key elements of the design such as for the general shell, the basemat, the discontinuities at cylinder base and the intersection with the dome, the large openings, buttresses, high energy piping penetrations, and pipe whip restraint locations, where required.

The behavior of the PCCV model overall is typically axisymmetric, particularly under dead and pressure loads. The non-axisymmetric effects of such loads including but not limited to wind, tornadoes, earthquake, and pipe rupture are taken into account in the FE analysis as required by SRP 3.8.1, Section II.4.B (Reference 3.8-7).

In designing the PCCV superstructure, the square root of the sum of the squares (SRSS) method based on elastic analyses is used to evaluate the seismic load for the three components of the earthquake. ~~In designing the PCCV superstructure, individual nodal spring stiffnesses are applied at the supporting FE model boundary (i.e, the basemat/soil interface) to represent the properties of elastic soil springs with tension capability because the SRSS method based on elastic analyses is used to evaluate the seismic load for the three components of the earthquake.~~ The design forces due to the seismic load obtained by the SRSS method are beyond those obtained from inelastic analysis, at the PCCV shell/mat interface. The associated redistribution effects are found to be insignificant.

3.8.4.4.1 R/B

The R/B includes the MCR and the fuel storage area, and is a reinforced concrete structure consisting of vertical shear/bearing walls and horizontal slabs. The walls carry the vertical loads from the structure to the basemat. Lateral loads are transferred to the walls by the roof and floor slabs.

The fuel handling area is a reinforced concrete structure supported by structural steel framing. The new fuel is stored in racks in a dry, unlined pit. The spent fuel pit is lined with stainless steel and is normally flooded to an elevation 1 ft, 2 in. below the operating floor deck. Subsection 9.1.2 describes the design bases and layout of the fuel storage area.

The design and analysis procedures for the R/B, other than the PCCV and containment internal structure, including assumptions on boundary conditions and expected behavior under loads, are in accordance with ACI-349 (Reference 3.8-8) for concrete structures, with AISC N690 (Reference 3.8-9) for steel structures, and with American Iron and Steel Institute (AISI) specification for cold formed steel structures (Reference 3.8-38).

The design considers normal loads (including construction, dead, live, and thermal), and the SSE. Seismic forces are obtained from the dynamic analysis ~~of the three-dimensional lumped-mass stick model~~ described in Subsection 3.7.2. These loads are applied to the linear elastic FE model fixed at elevation 3 ft, 7 in. as equivalent static forces. Loads and load combinations are given in Subsection 3.8.4.3.

The design of the R/B's flexible shear walls and floor slabs, like that of the main steam piping room with many openings, takes into account the out-of-plane bending and shear loads, such as live load, dead load, and seismic load. Also, the walls and slabs of the spent fuel pit and the emergency feedwater pit are designed to resist the out-of-plane bending and shear loads, such as live load, dead load, seismic, hydrostatic, and hydrodynamic pressure.

The R/B is analyzed using a three-dimensional FE model with the ANSYS computer codes (Reference 3.8-14). The FE model is shown in Figure 3.8.4-2.

The basemat design is described in Subsection 3.8.5.

3.8.4.4.1.1 Structural Design of Critical Sections

This subsection summarizes the structural design of representative seismic category I structural elements in the R/B. These structural elements are listed below and the corresponding location numbers are shown on Figure 3.8.4-3.

SECTION 1 West exterior wall of R/B, elevation 3 ft, 7 in. to elevation 101 ft, 0 in. This exterior wall illustrates typical loads such as temperature gradients, seismic, and tornado missile.

SECTION 2 South interior wall of R/B, elevation 3 ft, 7 in. to elevation 101 ft, 0 in. This is one of the most highly stressed shear walls.

3.8.4.4.2 East and West PS/Bs

The east and west PS/Bs provide two emergency power sources, and are reinforced concrete structures consisting of vertical shear/bearing walls and horizontal slabs. The walls carry the vertical loads from the structure to the basemat. Lateral loads are transferred to the walls by the roof and floor slabs.

The design and analysis procedures for the PS/Bs, as described above for the R/B above including assumptions on boundary conditions and expected behavior under loads, are in accordance with ACI-349 (Reference 3.8-7) for concrete structures, with AISC N690 (Reference 3.8-8) for steel structures, and AISI specification for cold formed steel structures Reference 3.8-38).

The design considers normal loads including construction, dead, live, thermal, and the SSE. Seismic forces are obtained from the dynamic analysis described in Subsection 3.7.2.~~Seismic forces are obtained from the dynamic analysis of the three-dimensional lumped-mass stick model described in Subsection 3.7.2.~~ Loads and load combinations are provided in Subsection 3.8.4.3.

The PS/Bs are analyzed using a three-dimensional FE model with the ANSYS computer codes (Reference 3.8-14). The FE model is shown in Figure 3.8.4-10. The basemat design is described in Subsection 3.8.5.

3.8.4.4.2.1 Structural Design of Critical Sections

This subsection summarizes the structural design of representative seismic category I structural elements in the PS/Bs. These structural elements listed below are for the west PS/B, which is the worst case configuration and contains the most critical sections. Locations within the west PS/B are shown with corresponding sections and area on Figure 3.8.4-11 and Figure 3.8.4-12.

SECTION 1 South exterior wall of west PS/B, elevation -26 ft, 4 in. to elevation 39 ft, 6 in. This exterior wall illustrates typical loads such as temperature gradients, seismic, and tornado missile.

SECTION 2 Typical interior wall of PS/Bs, elevation -26 ft, 4 in. to elevation 3 ft, 7 in. This is one of the most highly stressed shear walls.

AREA 1 The slab of PS/B at elevation 3 ft, 7 in. The slab is subjected to live loads and temperature gradients.

3.8.4.4.2.2 Shear Walls

Structural Description

All exterior walls are shear walls, however internal shear walls exist only in the north-south axis. The stress levels in shear walls depend on thickness, configuration, aspect ratio, amount of reinforcement and the seismic acceleration level. The walls are monolithically cast with the concrete floor slabs. The in-plane behavior of these shear walls, including the large openings, is adequately represented in the analytical models for the global seismic response. The shear walls are used as the primary system for resisting the lateral loads, such as earthquakes.

include acceptance criteria for overturning, sliding, and flotation as detailed in Table 3.8.5-1. The non-ASME portion of the basemat is designed in accordance with ACI-349 (Reference 3.8-8) and the provisions of RG 1.142 (Reference 3.8-19), where applicable. The reinforced concrete basemat for the PCCV and enveloped containment internal structure are designed in accordance with ASME Code Section III, Division 2, Subsection CC (Reference 3.8-2). Figure 3.8.5-4 delineates basemat regions applicable to each Code.

3.8.5.4 Design and Analysis Procedures

Based on the premise that seismic category I buildings basemats are not supported on bedrock, a computer analysis of the SSI is performed for static and dynamic loads. Subsection 3.7.2 provides further information. Two types of SSI analyses are required for the R/B and the PS/Bs: an overall seismic analysis of the building for the superstructure design, and a local analysis of the basemat for its design. For the basemat design, the basemat is modeled using solid finite elements with springs representing the subgrade.

The seismic category I structures are concrete, shear-wall structures consisting of vertical shear/bearing walls and horizontal floor slabs designed to SSE accelerations as discussed in Section 3.7. The walls carry the vertical loads from the structure to the basemat. Lateral loads are transferred to the walls by the roof and floor slabs. The walls then transmit the loads to the basemat. The walls also provide stiffness to the basemat and distribute the loads between them.

The reinforced concrete basemat for the PCCV and enveloped containment internal structure are designed in accordance with ASME Code Section III, Division 2, Subsection CC (Reference 3.8-2). Other seismic category I basemats of reinforced concrete are designed in accordance with ACI-349 (Reference 3.8-8) and the provisions of RG 1.142 (Reference 3.8-19) where applicable. Table 3.8.5-2 identifies the material properties of concrete and Figure 3.8.5-4 delineates the governing codes based on region of the R/B, PCCV and containment internal structure basemat.

3.8.5.4.1 Properties of Subgrade

For the purposes of the US-APWR standard design, the SSI effects are captured using a representative suite of soil profiles and depths to baserock material with frequency dependent properties. Section 3.7.2.4 provides further discussion relating to SSI and the selection of subgrade types. ~~For purposes of the US-APWR standard design, the SSI effects are captured by considering three generic subgrade types utilizing frequency independent springs. A fourth subgrade condition is also considered, that of a foundation resting on hard rock. For the fourth condition, it is not necessary to consider SSI effects because the foundation is considered to be resting on a fixed base that is rigid. Subsection 3.7.2.4 provides further discussion relating to SSI and the selection of subgrade types.~~

The soil profiles, due to the frequency-dependency of multiple soil layers, are variable opposed to fixed values. Documenting of typical (generic) subgrade conditions is not applicable. ~~The four supporting media (subgrade) conditions for the US-APWR design are provided in Table 3.8.5-3.~~

A set of eight (8) generic layered profiles are selected for SSI analyses, which strain-compatible properties, shear-wave (Vs) and compressional-wave (Vp) velocities and corresponding hysteretic damping values provide a wide variation of properties that addresses soil properties. The development of frequency dependent properties used in the seismic analyses is described further in Section 3.7.2.4. ~~The properties of conditions provided in Table 3.8.5-3 are considered to represent stiffness properties of the subgrade material that are compatible to the strains generated in the soil by the input design ground motion. The dissipation of energy in the subgrade media due to the soil material damping is conservatively neglected.~~

The minimum allowable subgrade bearing capacity of 15,000 psf represents the maximum bearing pressures resulting from static load cases for the R/B-PCCV-containment internal structure common foundation, while the minimum allowable dynamic soil bearing capacity of 60,000 psf represents the maximum bearing pressure resulting from Normal plus SSE loads. These bearing pressures envelope the foundation bearing pressures for all other standard plant building structures.

The foundation depth-to-equivalent-radius ratio for the R/B-PCCV basemat is less than 0.3, which indicates a shallow embedment foundation for purposes of SSI as defined in ASCE 4-98, Subsection 3.3.4.2 (Reference 3.8-34). Embedment effects on the R/B and PCCV SSI analysis are neglected in the US-APWR standard plant design in obtaining the soil impedance functions. Therefore, the R/B-PCCV seismic models are not coupled with any subgrade or backfill material at the sides of the basemat or along the faces of below-grade exterior walls, and no credit is taken in the seismic analysis for restraint due to the presence of these materials. Subsequently, there are no explicit requirements for shear wave velocity or other material characteristics requirements for the subgrade and/or backfill materials present on the sides of the basemat and R/B below-grade exterior walls. Subsection 3.7.2.4 provides additional discussion on the SSI analysis.

3.8.5.4.2 Analyses for Loads during Operation

The major seismic category I structures basemat analyses use 3-dimensional ANSYS FE models of the major seismic category I structures, which are described in Subsection 3.7.2.3. Soil springs are assigned in the model to determine the interaction of the basemat with the overlying structures and with the subgrade. The model is capable of determining the possibility of uplift of the basemat from the subgrade during postulated SSE events. The vertical spring at each node in the analytical model act in compression only. The horizontal springs are active when the vertical spring is in compression and inactive when the vertical spring lifts off.

The three-dimensional FE model of the basemat includes the structures above the basemat and their effect on the distribution of loads on the basemat. The combined global FE model of the R/B, PCCV, and containment internal structure, including basemat, is presented on Figures 3.8.5-5 through 3.8.5-10.

The analysis considers normal and extreme environmental loads and containment pressure loads. The normal loads include dead loads and live loads. Extreme environmental loads include the SSE.

Dead loads are applied as inertia loads. Live loads and the SSE loads are applied as concentrated loads on the nodes. The SSE loads are applied as equivalent static loads.

For the structural design of the basemat concrete and reinforcing, the three directions of the earthquake loading are combined using the Newmark 100-40-40 method. Note that this method of combination is different from that used for the structural design of the PCCV, containment internal structure, and R/B, which is the SRSS method.

Linear analyses are performed for all specified load combinations assuming that the soil springs can take tension. The results of the linear cases are then used to select critical load cases for non-linear analyses. The results from these analyses include the forces, shears, and moments in the basemat; the bearing pressures under the basemat; and the area of the basemat that is uplifted. Minimum area of steel reinforcement is calculated from the section forces for the most critical load combinations.

The required reinforcement steel for the portion of the basemat under the R/B (other than PCCV) is determined by considering the reinforcement envelope for the full non-linear iteration of the most critical load combinations.

3.8.5.4.2.1 Global Three-Dimensional FE Modeling of Basemat

The stress conditions of the basemat are generated by numerous types of loads from the superstructure. The modeling of the basemat therefore involves evaluating the interaction between the basemat and the superstructures to determine the stress conditions at the interface. The global FE model is analyzed utilizing the FE computer program ANSYS (Reference 3.8-14).

Regarding the R/B, the element division in a horizontal direction inside the secondary shield walls of containment internal structure is made in a rectangular grid and that outside the secondary shield wall is made in a polar pattern. Peripheral areas of the basemat are divided in a rectangular grid.

The upper portion of tendon gallery is considered with concentrated stresses created by the connection with the PCCV. This region is divided into four elements in the radial direction to better evaluate the stresses.

The basemat below the PCCV and the lower portion of containment internal structure are simulated with hexahedral solid elements. The elements below the PCCV are divided into three to fifteen parts in thickness, and elements in peripheral areas are divided into three parts. The FE modeling of the PS/Bs is provided in Subsection 3.8.4.4.

3.8.5.4.3 Boundary Conditions of Basemat

An SSI analysis is performed on the SASSI model of the R/B with the model resting on the surface of a half-space with hard-rock properties. This is to simulate the response of the structure under a fixed base condition ~~The basemat subgrade in the FE model is represented by translational spring elements that are attached to the bottom of the basemat. The stiffness of the backfill around the below-grade walls is not considered in the model.~~ Subgrade coefficients, determined based on the SSI lumped parameter values listed in Table 3H.2-14 of Appendix 3H, are used to assign spring values to the individual nodes of the FE model. These subgrade coefficients are multiplied by the basemat nodal point tributary areas to compute the spring constants assigned to the nodal points. The vertical spring stiffnesses are also developed in a manner such that

Table 3.8.5-3 Deleted ~~Supporting Media Conditions~~

	~~Soft Soil~~	~~Stiff Soil (Medium 1)~~	~~Soft Rock (Medium 2)~~	~~Hard Rock (Fixed)~~
~~Young's Modulus, E (ksi)~~	~~66~~	~~928~~	~~3,448~~	~~5,747~~
~~Poisson's Ratio, υ~~	~~0.40~~	~~0.35~~	~~0.35~~	~~0.30~~

Security-Related Information – Withheld Under 10 CFR 2.390

Figure 3.8.3-6 Interior Compartments Wall Layout and Configuration (Sheet 6 of 7)

(SRI)

Security-Related Information – Withheld Under 10 CFR 2.390

Figure 3.8.3-6 Interior Compartments Wall Layout and Configuration (Sheet 7 of 7)

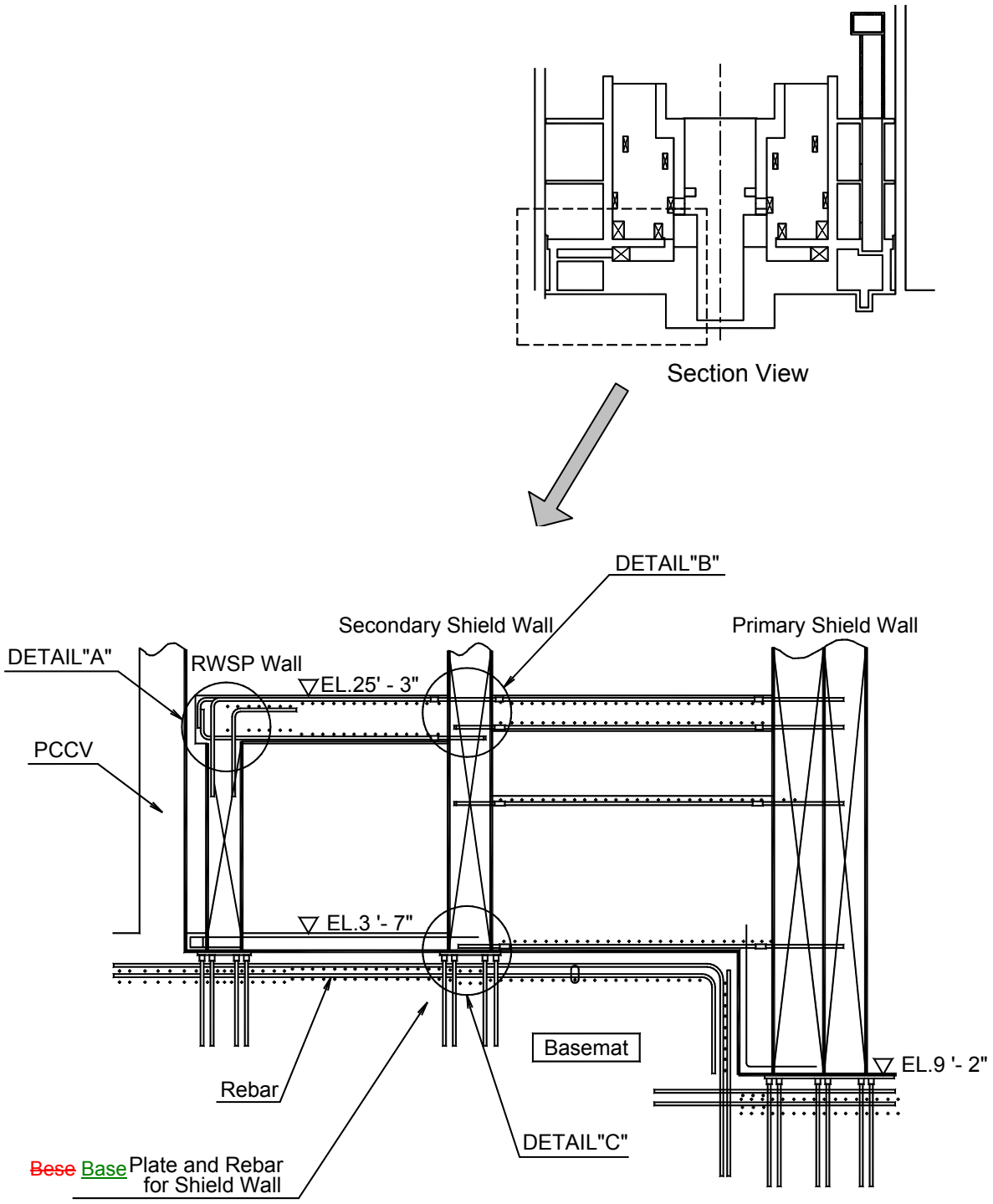

Figure 3.8.3-7 Typical Details of SC Modules (Sheet 2 of 5)

Table 3.9-13 Pump IST (Sheet 1 of 9)

Tag No.	Description	Pump Type	Group	Required Test				Test Frequency	Acceptance Criteria
				Outlet Flow	Differential Pressure	Vibration	Speed		
CVS-MPP-001A	A-Charging pump	Centrifugal	A	○	○	○	N/A(constant speed induction motor)	①Quarterly, Required Test is conducted. ②Biennially, Comprehensive Test is conducted.	Table ISTB-~~5121~~5100-1 in ASME OM Code (Reference 3.9-13) is applied.
CVS-MPP-001B	B-Charging pump	Centrifugal	A	○	○	○	N/A(constant speed induction motor)	①Quarterly, Required Test is conducted. ②Biennially, Comprehensive Test is conducted.	Table ISTB-~~5121~~5100-1 in ASME OM Code (Reference 3.9-13) is applied.
SIS-MPP-001A	A-Safety injection pump	Centrifugal	B	○	○	-	N/A(constant speed induction motor)	①Quarterly, Required Test is conducted ②Biennially, Comprehensive Test including vibration test is conducted	Table ISTB-~~5121~~5100-1 in ASME OM Code (Reference 3.9-13) is applied.
SIS-MPP-001B	B-Safety injection pump	Centrifugal	B	○	○	-	N/A(constant speed induction motor)	①Quarterly, Required Test is conducted ②Biennially, Comprehensive Test including vibration test is conducted.	Table ISTB-~~5121~~5100-1 in ASME OM Code (Reference 3.9-13) is applied.
SIS-MPP-001C	C-Safety injection pump	Centrifugal	B	○	○	-	N/A(constant speed induction motor)	①Quarterly, Required Test is conducted ②Biennially, Comprehensive Test including vibration test is conducted	Table ISTB-~~5121~~5100-1 in ASME OM Code (Reference 3.9-13) is applied.

Table 3.9-13 Pump IST (Sheet 2 of 9)

Tag No.	Description	Pump Type	Group	Required Test				Test Frequency	Acceptance Criteria
				Outlet Flow	Differential Pressure	Vibration	Speed		
SIS-MPP-001D	D-Safety injection pump	Centrifugal	B	○	○	-	N/A(constant speed induction motor)	①Quarterly, Required Test is conducted ②Biennially, Comprehensive Test including vibration test is conducted.	Table ISTB-~~5121~~5100-1 in ASME OM Code (Reference 3.9-13) is applied.
RHS-MPP-001A	A-Containment spray/residual heat removal pump	Centrifugal	A	○	○	○	N/A(constant speed induction motor)	①Quarterly, Required Test is conducted ②Biennially, Comprehensive Test is conducted	Table ISTB-~~5121~~5100-1 in ASME OM Code (Reference 3.9-13) is applied.
RHS-MPP-001B	B-Containment spray/residual heat removal pump	Centrifugal	A	○	○	○	N/A(constant speed induction motor)	①Quarterly, Required Test is conducted ②Biennially, Comprehensive Test is conducted	Table ISTB-~~5121~~5100-1 in ASME OM Code (Reference 3.9-13) is applied.
RHS-MPP-001C	C-Containment spray/residual heat removal pump	Centrifugal	A	○	○	○	N/A(constant speed induction motor)	①Quarterly, Required Test is conducted ②Biennially, Comprehensive Test is conducted	Table ISTB-~~5121~~5100-1 in ASME OM Code (Reference 3.9-13) is applied.
RHS-MPP-001D	D-Containment spray/residual heat removal pump	Centrifugal	A	○	○	○	N/A(constant speed induction motor)	①Quarterly, Required Test is conducted ②Biennially, Comprehensive Test is conducted	Table ISTB-~~5121~~5100-1 in ASME OM Code (Reference 3.9-13) is applied.

Table 3.9-13 Pump IST (Sheet 3 of 9)

Tag No.	Description	Pump Type	Group	Required Test				Test Frequency	Acceptance Criteria
				Outlet Flow	Differential Pressure	Vibration	Speed		
EFS-MPP-001A	A-Emergency feedwater pump	Turbine Driven Centrifugal	B	○	○	-	○	①Quarterly, Required Test is conducted ②Biennially, Comprehensive Test including vibration test is conducted.	Table ISTB-~~5121~~5100-1 in ASME OM Code (Reference 3.9-13) is applied.
EFS-MPP-001B	B-Emergency feedwater pump	Motor Driven Centrifugal	B	○	○	-	N/A(constant speed induction motor)	①Quarterly, Required Test is conducted ②Biennially, Comprehensive Test including vibration test is conducted.	Table ISTB-~~5121~~5100-1 in ASME OM Code (Reference 3.9-13) is applied.
EFS-MPP-001C	C-Emergency feedwater pump	Turbine Driven Centrifugal	B	○	○	-	○	①Quarterly, Required Test is conducted ②Biennially, Comprehensive Test including vibration test is conducted.	Table ISTB-~~5121~~5100-1 in ASME OM Code (Reference 3.9-13) is applied.
EFS-MPP-001D	D-Emergency feedwater pump	Motor Driven Centrifugal	B	○	○	-	N/A(constant speed induction motor)	①Quarterly, Required Test is conducted ②Biennially, Comprehensive Test including vibration test is conducted.	Table ISTB-~~5121~~5100-1 in ASME OM Code (Reference 3.9-13) is applied.
NCS-MPP-001A	A-Component cooling water pump	Centrifugal	A	○	○	○	N/A(constant speed induction motor)	①Quarterly, Required Test is conducted. ②Biennially, Comprehensive Test is conducted.	Table ISTB-~~5121~~5100-1 in ASME OM Code (Reference 3.9-13) is applied.

Table 3.9-13 Pump IST (Sheet 4 of 9)

Tag No.	Description	Pump	Group	Required Test	Test Frequency	Acceptance

		Type		Outlet Flow	Differential Pressure	Vibration	Speed		Criteria
NCS-MPP-001B	B-Component cooling water pump	Centrifugal	A	○	○	○	N/A(constant speed induction motor)	①Quarterly, Required Test is conducted. ②Biennially, Comprehensive Test is conducted.	Table ISTB-~~5121~~5100-1 in ASME OM Code (Reference 3.9-13) is applied.
NCS-MPP-001C	C-Component cooling water pump	Centrifugal	A	○	○	○	N/A(constant speed induction motor)	①Quarterly, Required Test is conducted. ②Biennially, Comprehensive Test is conducted.	Table ISTB-~~5121~~5100-1 in ASME OM Code (Reference 3.9-13) is applied.
NCS-MPP-001D	D-Component cooling water pump	Centrifugal	A	○	○	○	N/A(constant speed induction motor)	①Quarterly, Required Test is conducted. ②Biennially, Comprehensive Test is conducted.	Table ISTB-~~5121~~5100-1 in ASME OM Code (Reference 3.9-13) is applied.
EWS-MPP-001A	A-Essential service water pump	Vertical Line Shaft Centrifugal	A	○	○	○	N/A(constant speed induction motor)	①Quarterly, Required Test is conducted. ②Biennially, Comprehensive Test is conducted.	Table ISTB-~~5121~~5200-1 in ASME OM Code (Reference 3.9-13) is applied.
EWS-MPP-001B	B-Essential service water pump	Vertical Line Shaft Centrifugal	A	○	○	○	N/A(constant speed induction motor)	①Quarterly, Required Test is conducted. ②Biennially, Comprehensive Test is conducted.	Table ISTB-~~5121~~5200-1 in ASME OM Code (Reference 3.9-13) is applied.

Table 3.9-13 Pump IST (Sheet 5 of 9)

Tag No.	Description	Pump Type	Group	Required Test				Test Frequency	Acceptance Criteria
				Outlet Flow	Differential Pressure	Vibration	Speed		
EWS-MPP-001C	C-Essential service water pump	Vertical Line Shaft Centrifugal	A	○	○	○	N/A(constant speed induction motor)	①Quarterly, Required Test is conducted. ②Biennially, Comprehensive Test is conducted.	Table ISTB-~~5121~~5200-1 in ASME OM Code (Reference 3.9-13) is applied.
EWS-MPP-001D	D-Essential service water pump	Vertical Line Shaft Centrifugal	A	○	○	○	N/A(constant speed induction motor)	①Quarterly, Required Test is conducted. ②Biennially, Comprehensive Test is conducted.	Table ISTB-~~5121~~5200-1 in ASME OM Code (Reference 3.9-13) is applied.
SFS-MPP-001A	A-Spent fuel pit pump	Centrifugal	A	○	○	○	N/A(constant speed induction motor)	①Quarterly, Required Test is conducted. ②Biennially, Comprehensive Test is conducted.	Table ISTB-~~5121~~5100-1 in ASME OM Code (Reference 3.9-13) is applied.
SFS-MPP-001B	B-Spent fuel pit pump	Centrifugal	A	○	○	○	N/A(constant speed induction motor)	①Quarterly, Required Test is conducted. ②Biennially, Comprehensive Test is conducted.	Table ISTB-~~5121~~5100-1 in ASME OM Code (Reference 3.9-13) is applied.

Table 3.9-13 Pump IST (Sheet 6 of 9)

Tag No.	Description	Pump Type	Group	Required Test				Test Frequency	Acceptance Criteria
				Outlet Flow	Differential Pressure	Vibration	Speed		
RWS-MPP-001A	A-Refueling Water Recirculation Pump	Centrifugal	A	○	○	○	N/A(constant speed induction motor)	①Quarterly, Required Test is conducted. ②Biennially, Comprehensive Test is conducted.	Table ISTB-~~5121~~5100-1 in ASME OM Code (Reference 3.9-13) is applied.
RWS-MPP-001B	B—Refueling Water Recirculation Pump	Centrifugal	A	○	○	○	N/A(constant speed induction motor)	①Quarterly, Required Test is conducted. ②Biennially, Comprehensive Test is conducted.	Table ISTB-~~5121~~5100-1 in ASME OM Code (Reference 3.9-13) is applied.
VWS-MPP-001A	A-Essential Chilled Water Pump	Centrifugal	A	○	○	○	N/A(constant speed induction motor)	①Quarterly, Required Test is conducted. ②Biennially, Comprehensive Test is conducted.	Table ISTB-~~5121~~5100-1 in ASME OM Code (Reference 3.9-13) is applied.

Table 3.9-13 Pump IST (Sheet 7 of 9)

Tag No.	Description	Pump Type	Group	Required Test				Test Frequency	Acceptance Criteria
				Outlet Flow	Differential Pressure	Vibration	Speed		
VWS-MPP-001B	B-Essential Chilled Water Pump	Centrifugal	A	○	○	○	N/A(constant speed induction motor)	①Quarterly, Required Test is conducted. ②Biennially, Comprehensive Test is conducted.	Table ISTB-~~5121~~5100-1 in ASME OM Code (Reference 3.9-13) is applied.
VWS-MPP-001C	C-Essential Chilled Water Pump	Centrifugal	A	○	○	○	N/A(constant speed induction motor)	①Quarterly, Required Test is conducted. ②Biennially, Comprehensive Test is conducted.	Table ISTB-~~5121~~5100-1 in ASME OM Code (Reference 3.9-13) is applied.
VWS-MPP-001D	D-Essential Chilled Water Pump	Centrifugal	A	○	○	○	N/A(constant speed induction motor)	①Quarterly, Required Test is conducted. ②Biennially, Comprehensive Test is conducted.	Table ISTB-~~5121~~5100-1 in ASME OM Code (Reference 3.9-13) is applied.

Table 3.9-13 Pump IST (Sheet 8 of 9)

Tag No.	Description	Pump Type	Group	Required Test				Test Frequency	Acceptance Criteria
				Outlet Flow	Differential Pressure	Vibration	Speed		
GTS-MPP-001A	A-Emergency Gas Turbine Fuel Oil Transfer Pump	Centrifugal	B	○	○	-	N/A(constant speed induction motor)	①Quarterly, Required Test is conducted ②Biennially, Comprehensive Test including vibration test is conducted.	Table ISTB-~~5121~~5100-1 in ASME OM Code (Reference 3.9-13) is applied.
GTS-MPP-002A	B-Emergency Gas Turbine Fuel Oil Transfer Pump	Centrifugal	B	○	○	-	N/A(constant speed induction motor)	①Quarterly, Required Test is conducted ②Biennially, Comprehensive Test including vibration test is conducted.	Table ISTB-~~5121~~5100-1 in ASME OM Code (Reference 3.9-13) is applied.
GTS-MPP-001B	C-Emergency Gas Turbine Fuel Oil Transfer Pump	Centrifugal	B	○	○	-	N/A(constant speed induction motor)	①Quarterly, Required Test is conducted ②Biennially, Comprehensive Test including vibration test is conducted.	Table ISTB-~~5121~~5100-1 in ASME OM Code (Reference 3.9-13) is applied.
GTS-MPP-002B	D-Emergency Gas Turbine Fuel Oil Transfer Pump	Centrifugal	B	○	○	-	N/A(constant speed induction motor)	①Quarterly, Required Test is conducted ②Biennially, Comprehensive Test including vibration test is conducted.	Table ISTB-~~5121~~5100-1 in ASME OM Code (Reference 3.9-13) is applied.
GTS-MPP-001C	E-Emergency Gas Turbine Fuel Oil Transfer Pump	Centrifugal	B	○	○	-	N/A(constant speed induction motor)	①Quarterly, Required Test is conducted ②Biennially, Comprehensive Test including vibration test is conducted.	Table ISTB-~~5121~~5100-1 in ASME OM Code (Reference 3.9-13) is applied.

Table 3.9-13 Pump IST (Sheet 9 of 9)

Tag No.	Description	Pump Type	Group	Required Test				Test Frequency	Acceptance Criteria
				Outlet Flow	Differential Pressure	Vibration	Speed		
GTS-MPP-002C	F-Emergency Gas Turbine Fuel Oil Transfer Pump	Centrifugal	B	○	○	-	N/A(constant speed induction motor)	①Quarterly, Required Test is conducted ②Biennially, Comprehensive Test including vibration test is conducted.	Table ISTB-~~5121~~5100-1 in ASME OM Code (Reference 3.9-13) is applied.
GTS-MPP-001D	G-Emergency Gas Turbine Fuel Oil Transfer Pump	Centrifugal	B	○	○	-	N/A(constant speed induction motor)	①Quarterly, Required Test is conducted ②Biennially, Comprehensive Test including vibration test is conducted.	Table ISTB-~~5121~~5100-1 in ASME OM Code (Reference 3.9-13) is applied.
GTS-MPP-002D	H-Emergency Gas Turbine Fuel Oil Transfer Pump	Centrifugal	B	○	○	-	N/A(constant speed induction motor)	①Quarterly, Required Test is conducted ②Biennially, Comprehensive Test including vibration test is conducted.	Table ISTB-~~5121~~5100-1 in ASME OM Code (Reference 3.9-13) is applied.

Table 3.9-14 Valve Inservice Test Requirements (Sheet 104 of 151)

Valve Tag Number	Description	Valve/ Actuator Type	Safety-Related Missions	Safety Functions(2)	ASME IST Category	Inservice Testing Type and Frequency	IST Notes
EWS-VLV-502B	Essential service water pump discharge check	Check	Maintain Open Transfer Open Maintain Close Transfer Close	Active	BC	Check Exercise/ Refueling Outage	3
EWS-VLV-502C	Essential service water pump discharge check	Check	Maintain Open Transfer Open Maintain Close Transfer Close	Active	BC	Check Exercise/ Refueling Outage	3
EWS-VLV-502D	Essential service water pump discharge check	Check	Maintain Open Transfer Open Maintain Close Transfer Close	Active	BC	Check Exercise/ Refueling Outage	3
EWS-MOV-503A	Essential service water pump discharge	Remote MO Butterfly	Maintain Close Maintain Open Transfer Open Transfer Close	Active Remote Position	B	Remote Position Indication, Exercise/2 Years Exercise Full Stroke/ Cold Shutdown Operability Test	6
EWS-MOV-503B	Essential service water pump discharge	Remote MO Butterfly	Maintain Close Maintain Open Transfer Open Transfer Close	Active Remote Position	B	Remote Position Indication, Exercise/2 Years Exercise Full Stroke/ Cold Shutdown Operability Test	6

Table 3.9-14 Valve Inservice Test Requirements (Sheet 105 of 151)

Valve Tag Number	Description	Valve/ Actuator Type	Safety-Related Missions	Safety Functions(2)	ASME IST Category	Inservice Testing Type and Frequency	IST Notes
EWS-MOV-503C	Essential service water pump discharge	Remote MO Butterfly	Maintain Close Maintain Open Transfer Open Transfer Close	Active Remote Position	B	Remote Position Indication, Exercise/2 Years Exercise Full Stroke/ Cold Shutdown Operability Test	6
EWS-MOV-503D	Essential service water pump discharge	Remote MO Butterfly	Maintain Close Maintain Open Transfer Open Transfer Close	Active Remote Position	B	Remote Position Indication, Exercise/2 Years Exercise Full Stroke/ Cold Shutdown Operability Test	6
~~EWS-VLV-602A~~	~~Essential service water pump cooling water check~~	~~Check~~	~~Maintain Open~~ ~~Transfer Open~~ ~~Transfer Close~~	~~Active~~	~~BC~~	~~Check Exercise/ Refueling Outage~~	~~3~~
~~EWS-VLV-602B~~	~~Essential service water pump cooling water check~~	~~Check~~	~~Maintain Open~~ ~~Transfer Open~~ ~~Transfer Close~~	~~Active~~	~~BC~~	~~Check Exercise/ Refueling Outage~~	~~3~~
~~EWS-VLV-602C~~	~~Essential service water pump cooling water check~~	~~Check~~	~~Maintain Open~~ ~~Transfer Open~~ ~~Transfer Close~~	~~Active~~	~~BC~~	~~Check Exercise/ Refueling Outage~~	~~3~~

Table 3.9-14 Valve Inservice Test Requirements
(Sheet 106 of 151)

Valve Tag Number	Description	Valve/ Actuator Type	Safety-Related Missions	Safety Functions(2)	ASME IST Category	Inservice Testing Type and Frequency	IST Notes
~~EWS-VLV-602D~~	~~Essential service water pump cooling water check~~	~~Check~~	~~Maintain Open~~ ~~Transfer Open~~ ~~Transfer Close~~	~~Active~~	~~BC~~	~~Check Exercise/ Refueling Outage~~	~~3~~
EWS-MOV-573A	Essential service water pump discharge strainer backwash isolation valve	Remote MO Butterfly	Maintain Close Maintain Open Transfer Open Transfer Close	Active Remote Position	B	Remote Position Indication, Exercise/2 Years Exercise Full Stroke/ Cold Shutdown Operability Test	6
EWS-MOV-573B	Essential service water pump discharge strainer backwash isolation valve	Remote MO Butterfly	Maintain Close Maintain Open Transfer Open Transfer Close	Active Remote Position	B	Remote Position Indication, Exercise/2 Years Exercise Full Stroke/ Cold Shutdown Operability Test	6
EWS-MOV-573C	Essential service water pump discharge strainer backwash isolation valve	Remote MO Butterfly	Maintain Close Maintain Open Transfer Open Transfer Close	Active Remote Position	B	Remote Position Indication, Exercise/2 Years Exercise Full Stroke/ Cold Shutdown Operability Test	6

Table 3.9-14 Valve Inservice Test Requirements (Sheet 107 of 151)

Valve Tag Number	Description	Valve/ Actuator Type	Safety-Related Missions	Safety Functions(2)	ASME IST Category	Inservice Testing Type and Frequency	IST Notes
EWS-MOV-573D	Essential service water pump discharge strainer backwash isolation valve	Remote MO Butterfly	Maintain Close Maintain Open Transfer Open Transfer Close	Active Remote Position	B	Remote Position Indication, Exercise/2 Years Exercise Full Stroke/ Cold Shutdown Operability Test	6
EWS-MOV-574A	Essential service water pump discharge strainer backwash isolation valve	Remote MO Butterfly	Maintain Close Maintain Open Transfer Open Transfer Close	Active Remote Position	B	Remote Position Indication, Exercise/2 Years Exercise Full Stroke/ Cold Shutdown Operability Test	6
EWS-MOV-574B	Essential service water pump discharge strainer backwash isolation valve	Remote MO Butterfly	Maintain Close Maintain Open Transfer Open Transfer Close	Active Remote Position	B	Remote Position Indication, Exercise/2 Years Exercise Full Stroke/ Cold Shutdown Operability Test	6
EWS-MOV-574C	Essential service water pump discharge strainer backwash isolation valve	Remote MO Butterfly	Maintain Close Maintain Open Transfer Open Transfer Close	Active Remote Position	B	Remote Position Indication, Exercise/2 Years Exercise Full Stroke/ Cold Shutdown Operability Test	6

Table 3.9-14 Valve Inservice Test Requirements (Sheet 108 of 151)

Valve Tag Number	Description	Valve/ Actuator Type	Safety-Related Missions	Safety Functions(2)	ASME IST Category	Inservice Testing Type and Frequency	IST Notes
EWS-MOV-574D	Essential service water pump discharge strainer backwash isolation valve	Remote MO Butterfly	Maintain Close Maintain Open Transfer Open Transfer Close	Active Remote Position	B	Remote Position Indication, Exercise/2 Years Exercise Full Stroke/ Cold Shutdown Operability Test	6
LMS-AOV-060	C/V reactor coolant drain tank nitrogen supply containment isolation	Remote AO weir type diaphragm	Maintain Close Transfer Close	Active-to-Fail Containment Isolation Safety Seat Leakage Remote Position	A	Remote Position Indication, Exercise/2 Years Containment Isolation Leak Test Exercise Full Stroke/ Quarterly Operability Test	5
LMS-AOV-056	C/V reactor coolant drain tank vent header containment isolation	Remote AO weir type diaphragm	Maintain Close Transfer Close	Active-to-Fail Containment Isolation Safety Seat Leakage Remote Position	A	Remote Position Indication, Exercise/2 Years Containment Isolation Leak Test Exercise Full Stroke/ Quarterly Operability Test	5

3.11 Environmental Qualification of Mechanical and Electrical Equipment

Introduction

This section describes the implementation of the US-APWR environmental qualifications (EQ) program. The US-APWR EQ Program demonstrates and documents compliance with the requirements of 10 CFR 50, Appendix A, General Design Criteria 4, "Environmental and Dynamic Effects Design Bases," (Reference 3.11-1) which requires:

> Structures, systems, and components important to safety shall be designed to accommodate the effects of and to be compatible with the environmental conditions associated with normal operation, maintenance, testing, and postulated accidents, including loss-of-coolant accidents.

Electrical, mechanical, and I&C (both analog and digital) equipment designated as safety-related or important to safety is addressed in the EQ Program to verify it is capable of performing its design function(s) under all anticipated service conditions. These service conditions are defined in 10 CFR 50.49(b)(1)(ii), (Reference 3.11-2) and are listed below. The equipment addressed by the EQ Program is identified in Appendix 3D.

The typical design basis events include the following:

1. Normal operating conditions (e.g., refueling, shutdown, startup, operating)
2. AOO (e.g., plant trips, testing)
3. DBAs (e.g., LOCA, HELB)
4. External events (e.g., loss of offsite power)
5. Natural phenomena (e.g., earthquake, tornado)

The implementation of the US-APWR EQ Program is described in ~~a~~ MHI Technical Report MUAP-08015 titled, US-APWR Equipment ~~Environmental~~ Qualification Program issued as a separate report (Reference 3.11-3).

The Technical Report describes the EQ Program applicable to each licensed US-APWR. The Report describes the EQ process and its implementation during the design, procurement, construction, startup, and turnover phases of a US-APWR plant project. It identifies the various qualification programs, procedures, and policies that MHI and the applicable Architect/Engineer/Constructor implements in conjunction with the delivery of a US-APWR plant. The Report discusses the application of the EQ Program to both domestic and international suppliers, of the electrical and mechanical equipment described in Appendix 3D of the DCD. The EQ Program, quality assurance, record keeping, and associated programmatic interfaces is described to facilitate implementation of the post-turnover EQ Program by the licensee. The COL Applicant is to provide a schedule showing the EQ Program proposed implementation milestones.

The COL Applicant is responsible for assembling and maintaining the environmental qualification document, which summarizes the qualification results for all equipment identified in Appendix 3D, for the life of the plant. The environmental qualification document is to address the following information:

Table 3D-2 US-APWR Environmental Qualification Equipment List
(Sheet 29 of 64)

Item Num	Equipment Tag	Description	Location		Purpose	Operational Duration	Environmental Conditions	Radiation Condition	Influence of Submergence for Total Integrated Dose	Qualification Process	Seismic Category	Comments
			Building	Zone	RT, ESF, PAM, Pressure Boundary (PB), Other		Harsh or Mild	Harsh or Mild	Yes/No	E=Electrical M=Mechanical	I, II, Non	
22	CVS-AOV-192C	Air Operated Valve	PCCV	1-4	PB	1yr	Harsh	Harsh	No (1)	M	I	
23	CVS-AOV-192D	Air Operated Valve	PCCV	1-4	PB	1yr	Harsh	Harsh	No (1)	M	I	
24	CVS-LCV-031B	Level Control Valve	R/B	7	Other	2wks	Mild	Harsh	No (1)	M	I	
25	CVS-LCV-031C	Level Control Valve	R/B	7	Other	2wks	Mild	Harsh	No (1)	M	I	
26	CVS-LCV-031D	Level Control Valve	R/B	7	Other	2wks	Mild	Harsh	No (1)	M	I	
27	CVS-LCV-031E	Level Control Valve	R/B	7	Other	2wks	Mild	Harsh	No (1)	M	I	
28	CVS-AOV-165	Air Operated Valve	R/B	7	Other	2wks	Mild	Harsh	No (1)	M	I	
29	CVS-FCV-048	Flow Control Valve	R/B	7	PB	2wks	Mild	Harsh	No (1)	M	I	
30	CVS-FCV-050	Flow Control Valve	R/B	7	Other	2wks	Mild	Harsh	No (1)	M	I	
31	CVS-FCV-128	Flow Control Valve	R/B	13-3	Other	2wks	Mild	Harsh	No (1)	M	I	
32	CVS-FCV-129	Flow Control Valve	R/B	13-3	Other	2wks	Mild	Harsh	No (1)	M	I	
33	CVS-SRV-002	Safety Valve	PCCV	1-4	ESF	1yr	Harsh	Harsh	No (1)	M	I	
34	CVS-SRV-201	Safety Valve	PCCV	1-5	ESF	1yr	Harsh	Harsh	No (1)	M	I	
35	CVS-AOV-001A	Air Operated Valve	PCCV	1-4	PB	1yr	Harsh	Harsh	No (1)	M	I	
36	CVS-AOV-001B	Air Operated Valve	PCCV	1-4	PB	1yr	Harsh	Harsh	No (1)	M	I	
37	CVS-AOV-001C	Air Operated Valve	PCCV	1-4	PB	1yr	Harsh	Harsh	No (1)	M	I	
38	CVS-HCV-012	Air Operated Valve	PCCV	1-5	PB	1yr	Harsh	Harsh	No (1)	M	I	
39	CVS-HCV-100	Air Operated Valve	PCCV	1-5	PB	1yr	Harsh	Harsh	No (1)	M	I	
40	CVS-AOV-224	Air Operated Valve	PCCV	1-5	PB	1yr	Harsh	Harsh	No (1)	M	I	
41	CVS-LCV-031F	Air Operated Valve	R/B	7	Other	2 wks	Mild	Harsh	No (1)	M	I	
42	CVS-LCV-031G	Air Operated Valve	R/B	7	Other	2wks	Mild	Harsh	No (1)	M	I	
43	CVS-AOV-196A	Air Operated Valve	PCCV	1-4	PB	1yr	Harsh	Harsh	No (1)	M	I	
44	CVS-AOV-196B	Air Operated Valve	PCCV	1-4	PB	1yr	Harsh	Harsh	No (1)	M	I	
45	CVS-AOV-196C	Air Operated Valve	PCCV	1-4	PB	1yr	Harsh	Harsh	No (1)	M	I	
46	CVS-AOV-196D	Air Operated Valve	PCCV	1-4	PB	1yr	Harsh	Harsh	No (1)	M	I	

Table 3D-2 US-APWR Environmental Qualification Equipment List
(Sheet 44 of 64)

Item Num	Equipment Tag	Description	Location		Purpose	Operational Duration	Environmental Conditions	Radiation Condition	Influence of Submergence for Total Integrated Dose	Qualification Process	Seismic Category	Comments
			Building	Zone	RT, ESF, PAM, Pressure Boundary (PB), Other		Harsh or Mild	Harsh or Mild	Yes/No	E=Electrical M=Mechanical	I, II, Non	
5	EWS-SST-001A	A-Essential Service Water Pump Outlet Strainer	UHSRS	-	ESF	1yr	Mild	-	-	M	I	
6	EWS-SST-002A	A-Essential Service Water Pump Outlet Strainer	UHSRS	-	ESF	1yr	Mild	-	-	M	I	
7	EWS-SST-001B	B-Essential Service Water Pump Outlet Strainer	UHSRS	-	ESF	1yr	Mild	-	-	M	I	
8	EWS-SST-002B	B-Essential Service Water Pump Outlet Strainer	UHSRS	-	ESF	1yr	Mild	-	-	M	I	
9	EWS-SST-001C	C-Essential Service Water Pump Outlet Strainer	UHSRS	-	ESF	1yr	Mild	-	-	M	I	
10	EWS-SST-002C	C-Essential Service Water Pump Outlet Strainer	UHSRS	-	ESF	1yr	Mild	-	-	M	I	
11	EWS-SST-001D	D-Essential Service Water Pump Outlet Strainer	UHSRS	-	ESF	1yr	Mild	-	-	M	I	
12	EWS-SST-002D	D-Essential Service Water Pump Outlet Strainer	UHSRS	-	ESF	1yr	Mild	-	-	M	I	
13	EWS-SST-003A	A-Component Cooling Water Heat Exchanger Inlet Strainer	R/B	8	ESF	1yr	Mild	Harsh	No (1)	M	I	
14	EWS-SST-003B	B-Component Cooling Water Heat Exchanger Inlet Strainer	R/B	8	ESF	1yr	Mild	Harsh	No (1)	M	I	
15	EWS-SST-003C	C-Component Cooling Water Heat Exchanger Inlet Strainer	R/B	8	ESF	1yr	Mild	Harsh	No (1)	M	I	
16	EWS-SST-003D	D-Component Cooling Water Heat Exchanger Inlet Strainer	R/B	8	ESF	1yr	Mild	Harsh	No (1)	M	I	
17	EWS-MOV-503A	Motor Operated Valve	UHSRS	-	ESF	1yr	Mild	-	-	M	I	
18	EWS-MOV-503B	Motor Operated Valve	UHSRS	-	ESF	1yr	Mild	-	-	M	I	
19	EWS-MOV-503C	Motor Operated Valve	UHSRS	-	ESF	1yr	Mild	-	-	M	I	
20	EWS-MOV-503D	Motor Operated Valve	UHSRS	-	ESF	1yr	Mild	-	-	M	I	
21	EWS-MOV-573A	Motor Operated Valve	UHSRS	-	ESF	1yr	Mild	-	-	M	I	
22	EWS-MOV-573B	Motor Operated Valve	UHSRS	-	ESF	1yr	Mild	-	-	M	I	
23	EWS-MOV-573C	Motor Operated Valve	UHSRS	-	ESF	1yr	Mild	-	-	M	I	
24	EWS-MOV-573D	Motor Operated Valve	UHSRS	-	ESF	1yr	Mild	-	-	M	I	
25	EWS-MOV-574A	Motor Operated Valve	UHSRS	-	ESF	1yr	Mild	-	-	M	I	
26	EWS-MOV-574B	Motor Operated Valve	UHSRS	-	ESF	1yr	Mild	-	-	M	I	
27	EWS-MOV-574C	Motor Operated Valve	UHSRS	-	ESF	1yr	Mild	-	-	M	I	
28	EWS-MOV-574D	Motor Operated Valve	UHSRS	-	ESF	1yr	Mild	-	-	M	I	

Table 3D-2 US-APWR Environmental Qualification Equipment List
(Sheet 45 of 64)

Item Num	Equipment Tag	Description	Location		Purpose	Operational Duration	Environmental Conditions	Radiation Condition	Influence of Submergence for Total Integrated Dose	Qualification Process	Seismic Category	Comments
			Building	Zone	RT, ESF, PAM, Pressure Boundary (PB), Other		Harsh or Mild	Harsh or Mild	Yes/No	E=Electrical M=Mechanical	I, II, Non	
24	LMS-AOV-053	Air Operated Valve	R/B	6	ESF	5min	Mild	Harsh	No (1)	M	I	
25	LMS-AOV-055	Air Operated Valve	PCCV	1-5	ESF	5min	Harsh	Harsh	No (1)	M	I	
26	LMS-AOV-056	Air Operated Valve	R/B	6	ESF	5min	Mild	Harsh	No (1)	M	I	
27	LMS-AOV-060	Air Operated Valve	R/B	6	ESF	5min	Mild	Harsh	No (1)	M	I	
28	LMS-~~AO~~LCV-~~1000~~ 010A	Air Operated Valve	PCCV	1-5	ESF	5min	Harsh	Harsh	No (1)	M	I	
29	LMS-~~AO~~LCV-~~1000~~ 010B	Air Operated Valve	R/B	6	ESF	5min	Mild	Harsh	No (1)	M	I	
30	LMS-AOV-104	Air Operated Valve	PCCV	1-5	ESF	5min	Harsh	Harsh	No (1)	M	I	
31	LMS-AOV-105	Air Operated Valve	R/B	6	ESF	5min	Mild	Harsh	No (1)	M	I	
Equipment (Solid Radioactive Waste Management System)												
1	SMS-MTK-001A	A-Spent Resin Storage Tank	A/B	13-1	Other	1yr	Mild	Harsh	No (3)	M	Non	
2	SMS-MTK-001B	B-Spent Resin Storage Tank	A/B	13-1	Other	1yr	Mild	Harsh	No (3)	M	Non	
3	SMS-AOV-023A	Air Operated Valve	A/B	13-1	Other	1yr	Mild	Harsh	No (3)	M	Non	
4	SMS-AOV-023B	Air Operated Valve	A/B	13-1	Other	1yr	Mild	Harsh	No (3)	M	Non	
5	SMS-AOV-032A	Air Operated Valve	A/B	13-1	Other	1yr	Mild	Harsh	No (3)	M	Non	
6	SMS-AOV-032B	Air Operated Valve	A/B	13-1	Other	1yr	Mild	Harsh	No (3)	M	Non	
Equipment (Process and Post Accident Sampling System)												
1	PSS-AOV-003	Air Operated Valve	PCCV	1-5	ESF	1yr	Harsh	Harsh	No (1)	M	I	
2	PSS-MOV-006	Motor Operated Valve	PCCV	1-5	ESF	1yr	Harsh	Harsh	No (1)	M	I	
3	PSS-MOV-013	Motor Operated Valve	PCCV	1-5	ESF	1yr	Harsh	Harsh	No (1)	M	I	
4	PSS-MOV-023	Motor Operated Valve	PCCV	1-5	ESF	1yr	Harsh	Harsh	No (1)	M	I	
5	PSS-MOV-031A	Motor Operated Valve	R/B	6	ESF	1yr	Mild	Harsh	No (1)	M	I	
6	PSS-MOV-031B	Motor Operated Valve	R/B	6	ESF	1yr	Mild	Harsh	No (1)	M	I	
7	PSS -MOV-052A	Motor Operated Valve	R/B	13-2	Other	1yr	Mild	Harsh	No (1)	M	I	
8	PSS -MOV-052B	Motor Operated Valve	R/B	13-2	Other	1yr	Mild	Harsh	No (1)	M	I	

DCD_3.7.2-18

APPENDIX 3H

MODEL PROPERTIES FOR LUMPED MASS STICK MODELS OF R/B-PCCV-CONTAINMENT INTERNAL STRUCTURE ON A COMMON BASEMAT~~, AND PS/Bs ON INDIVIDUAL BASEMATS~~

3H Model Properties for Lumped Mass Stick Models of R/B-PCCV-Containment Internal Structure on a Common Basemat~~, and PS/Bs on Individual Basemats~~

3H.1 Introduction

This Appendix discusses the properties of the reactor building (R/B), prestressed concrete containment vessel (PCCV), and containment internal structure lumped mass stick models used for the seismic analysis. ~~This Appendix also discusses the properties of t~~The east and west power source buildings (PS/Bs) are not analyzed using lumped mass stick models, and this Appendix is therefore not applicable to these buildings. ~~used for the seismic analysis.~~

This Appendix presents ~~the results of the seismic analyses performed on the~~ lumped mass stick model~~s~~ properties, but does not address seismic analysis methods, procedures used for analytical modeling, soil-structure interaction (SSI) analysis methods, development of in-structure response spectra (ISRS), components of earthquake motion, combination of modal responses, interaction of non-seismic Category I structures with seismic Category I structures, effects of parameter variations on ISRS, use of constant vertical static factors, methods used to account for torsional effects, comparison of responses (time history versus response spectra analysis results), methods of seismic analysis of dams, determination of dynamic stability of seismic Category I structures, or analysis procedures for damping. Those topics are addressed in Subsection 3.7.2.

3H.2 Model Properties

Lumped mass stick models of the R/B, PCCV, and containment internal structure, hereafter referred to as the R/B complex, are developed to obtain the seismic response of these structures. The lumped mass stick model for each of these structures is included in a combined model, which represents the R/B-PCCV-containment internal structure resting on their common basemat, as shown in Figure 3H.2-1. A set of site-independent SSI analyses are performed on the surface of eight generic subgrade profiles. ~~Frequency independent SSI lumped parameters representing the stiffness and damping properties of the interaction of the basemat with the underlying subgrade are added at the base of the combined model to simulate a range of different subgrade conditions.~~

The overall modeling approach and procedures for this lumped mass stick model is discussed in Section 3.7.2.3.2. The envelope of amplified response spectra results at selected locations is used to develop broadened ISRS. ~~Figure 3H.2-2 provides elevation views of the R/B, PCCV, and containment internal structure of the overall stick model in the global XZ and YZ planes used for the model. The overall modeling approach and procedures for this lumped mass stick model are discussed in Subsection 3.7.2.3. Node points at the end of rigid outriggers (not shown in Figure 3H.2-1) are also included where appropriate at each floor level in the stick model in order to capture accelerations at the edges/corners of the structures. These response results obtained at the outrigger locations are used to develop ISRS. Comparison of the ISRS obtained from the combined lumped mass stick model versus the detailed finite element (FE) model for static analysis of the R/B-PCCV-containment internal structure are discussed further in Section 3H.3 of this Appendix.~~

Table 3H.2-1 provides a physical description of the mass locations for the overall R/B, PCCV, and containment internal structure model, including the node point elevations.

Mass properties including the associated weight, vertical and horizontal location of the center of gravity, and weight moment of inertia for each node of the PCCV portion of the model are provided in Table 3H.2-2. Table 3H.2-3 presents the PCCV element properties of the stick model elements including the moments of inertia about the global X, Y and Z axes, the shear area, shear area centroid, axial area, and axial area centroid for each stick element. The PCCV shell is a structure with uniform geometry and mass distribution, and the analyzed center of mass at each node point and element corresponds with the center of shear and axial rigidity.

Mass properties and element properties of the R/B-PCCV-containment internal structure model elements are provided for the containment internal structure portion of the model in Tables 3H.2-4 and 3H.2-5, mass properties and element properties of the model elements are provided for the R/B portion of the model in Tables 3H.2-6 and 3H.2-7, and mass properties and element properties of the model elements are provided for the common basemat portion of the model in Tables 3H.2-8 and 3H.2-9.

Table 3H.2-10 provides a summation of the weights of the PCCV, R/B, containment internal structure, and basemat portions of the lumped mass stick model.

3-D beam and spring elements are used to model the stiffness of the reinforced concrete shear walls, PCCV, and the steel-concrete (SC) modules of the containment internal structure above the ground elevation. The cross sectional properties of the beam elements and the stiffness properties of the spring elements are developed in MUAP-08005 (Reference 3H-1) following the methodology described in Section 3.7.2. ~~The lumped mass stick model of the PS/B as shown in Figure 3H.2-3 is use to obtain the seismic response. Figure 3H.2-4 provides elevation views of the PS/B lumped mass stick model in the NS and EW planes. The overall modeling approach and procedures for this lumped mass stick model are discussed in Subsection 3.7.2.3.~~

~~Mass properties and element properties of the PS/B model elements are provided in Tables 3H.2-11 and 3H.2-12, respectively.~~

~~Table 3H.2-13 presents the properties of the internodal spring elements that are shown in the combined R/B-PCCV-containment internal structure lumped mass stick model in Figure 3H.2-1. The RE42-RE04 and RE41-RE04 springs are modeled as infinitely stiff in order to represent the rigid diaphragm connection between the portions of the R/B roof. The IC07-JC05 spring represents the stiffness of the upper portion of the containment internal structure pressurizer house (located above the operating deck at Elevation 76 ft, 5 in. with respect to the lower portion of the containment internal structure.~~

Table 3H.2-14 presents the R/B complex ~~combined R/B-PCCV-containment internal structure~~ SSI lumped parameter coefficients, soil springs representing the SSI stiffness and damping coefficients representing the dissipation of energy in the SSI system. The SSI lumped parameter coefficients are computed for a representative suite of soil profiles and depths to baserock material with frequency dependent properties, ~~each of the three flexible generic subgrade conditions using the formulas and general approaches given in American Society of Civil Engineers (ASCE) 4 (Reference 3H-2),~~ discussed in further detail in Subsection 3.7.2.4. The SSI stiffness constants and

damping coefficients shown in Table 3H.2-14 are applied at ~~node BB01 representing~~ the bottom center of the basemat~~, as shown in Figure 3H.2-1. Table 3H.2-15 presents the SSI lumped parameter for the PS/Bs.~~

3H.3 Deleted ~~Seismic Analysis Results for Lumped Mass Stick Models~~

~~Table 3H.3-10 presents the results of the PS/B time history analyses by using the methodology described in Subsection 3.7.2.~~

3H.4 REFERENCES

3H-1 Dynamic Analysis of the Coupled RCL-R/B-PCCV-Containment Internal Structure Lumped Mass Stick Model, MUAP-08005, Mitsubishi Heavy Industries, Ltd., April 2008.

3H-2 Deleted ~~Seismic Analysis of Safety-Related Nuclear Structures. American Society of Civil Engineers, ASCE 4-98, Reston, Virginia, 2000.~~

3H-3 Combining Responses and Spatial Components in Seismic Response Analysis. Regulatory Guide 1.92, Rev. 2, U.S. Nuclear Regulatory Commission, Washington, DC, July 2006.

Table 3H.2-2 Mass Properties of Stick Model (PCCV)

Symbol	Description	Location			Lumped Mass Inertia			
		X (ft)	Y (ft)	Z (ft)	Weight (kip)	Jxx ($x10^6$ kip-ft^2)	Jyy ($x10^6$ kip-ft^2)	Jzz ($x10^6$ kip-ft^2)
CV11	Top of dome	0.00	0.00	230.17	887	0.0520	0.0520	0.1014
CV10	7ft under dome top	0.00	0.00	225.00	4099	2.882	2.882	5.624
CV09	El. At dome angle 40 deg.	0.00	0.00	201.67	7809	14.51	14.51	28.19
CV08	El. At dome angle 15 deg.	0.00	0.00	173.08	8491	23.40	23.40	45.75
CV07	Top of polar crane rail	0.00	0.00	145.58	11901	35.55	35.55	70.14
CV06	Roof of MS/FW room	0.00	0.00	115.50	9060	27.22	27.22	53.41
CV05	MS penetration	0.00	0.00	92.17	7529	22.43	22.43	44.37
CV04	Operation floor level	0.00	0.00	76.42	4639	13.75	13.75	27.36
CV03	FW penetration	0.00	0.00	68.25	4430	13.12	13.12	26.11
CV02	R/B 3rd floor level	0.00	0.00	50.17	7271	21.74	21.74	42.86
CV01	R/B 2nd floor level	0.00	0.00	25.25	8230	24.65	24.65	48.49

Subtotal Weight: 74,347 kip

Note: All node locations are in relationship to the analysis model. Datum point (0, 0, 0) is equal to 2'-7" below standard plant ground elevation, at the center of PCCV. Refer to Figure 3H.2-1 for orientation of x, y, and z axes.

~~Mass Name~~	~~Elevation (in)~~	~~Weight W ($\times 10^6$lb)~~	~~Weight Moment of Inertia ($\times 10^{12}$lb·in^2)~~			~~Mass Center (in)~~	
			~~J_{yy} NS~~	~~J_{xx} EW~~	~~J_{zz} Torsional~~	~~X_g NS~~	~~Y_g EW~~
~~CV11~~	~~2,762~~	~~0.887~~	~~0.00749~~	~~0.00749~~	~~0.0146~~	~~0.00~~	~~0.00~~
~~CV10~~	~~2,700~~	~~4.10~~	~~0.415~~	~~0.415~~	~~0.810~~	~~0.00~~	~~0.00~~
~~CV09~~	~~2,420~~	~~7.81~~	~~2.09~~	~~2.09~~	~~4.06~~	~~0.00~~	~~0.00~~
~~CV08~~	~~2,077~~	~~8.49~~	~~3.37~~	~~3.37~~	~~6.59~~	~~0.00~~	~~0.00~~
~~CV07~~	~~1,747~~	~~11.9~~	~~5.12~~	~~5.12~~	~~10.1~~	~~0.00~~	~~0.00~~

~~CV06~~	~~1,386~~	~~9.06~~	~~3.92~~	~~3.92~~	~~7.69~~	~~0.00~~	~~0.00~~
~~CV05~~	~~1,106~~	~~7.53~~	~~3.23~~	~~3.23~~	~~6.39~~	~~0.00~~	~~0.00~~
~~CV04~~	~~917~~	~~4.64~~	~~1.98~~	~~1.98~~	~~3.94~~	~~0.00~~	~~0.00~~
~~CV03~~	~~819~~	~~4.43~~	~~1.89~~	~~1.89~~	~~3.76~~	~~0.00~~	~~0.00~~
~~CV02~~	~~602~~	~~7.27~~	~~3.13~~	~~3.13~~	~~6.17~~	~~0.00~~	~~0.00~~
~~CV01~~	~~303~~	~~8.23~~	~~3.55~~	~~3.55~~	~~6.98~~	~~0.00~~	~~0.00~~

~~Subtotal : 74.36×10^{6} (lb)~~

Table 3H.2-3 Element Properties of Stick Model (PCCV)

Symbol	Height (ft)	Bottom Elevation (ft)	Eccentricity		Cross Sectional Properties						Shear Center (ft)	
			X (ft)	Y (ft)	Az (ft^2)	Ax (ft^2)	Ay (ft^2)	Iyy (ft^4)	Ixx (ft^4)	Izz (ft^4)	x_s NS	y_s EW
CV11	5.17	230.17	0	0	10.2	881.9	881.9	3.45E+05	3.45E+05	6.90E+05	0	0
CV10	23.33	225	0	0	116.7	881.9	881.9	2.02E+06	2.02E+06	4.04E+06	0	0
CV09	28.58	201.67	0	0	565.3	881.9	881.9	4.15E+06	4.15E+06	8.29E+06	0	0
CV08	27.5	173.08	0	0	2271	1000	1000	5.84E+06	5.84E+06	1.17E+07	0	0
CV07	30.08	145.58	0	0	2090	1042	1042	6.17E+06	6.17E+06	1.23E+07	0	0
CV06	23.33	115.5	0	0	2090	1042	1042	6.17E+06	6.17E+06	1.23E+07	0	0
CV05	15.75	92.17	0	0	2090	1042	1042	6.17E+06	6.17E+06	1.23E+07	0	0
CV04	8.17	76.42	0	0	2090	1042	1042	6.17E+06	6.17E+06	1.23E+07	0	0
CV03	18.08	68.25	0	0	2090	1042	1042	6.17E+06	6.17E+06	1.23E+07	0	0
CV02	24.92	50.17	0	0	2090	1042	1042	6.17E+06	6.17E+06	1.23E+07	0	0
CV01	23.33	25.25	0	0	2090	1042	1042	6.17E+06	6.17E+06	1.23E+07	0	0

Note: All node locations are in relationship to the analysis model. Datum point (0, 0, 0) for axes measurements is equal to 2'-7" below standard plant ground elevation, at the center of PCCV. Refer to Figure 3H.2-1 for orientation of x, y, and z axes.

~~Element Name~~	~~Torsional Const.~~ ~~I_{zz} ($\times 10^{11}$ in^4)~~	~~Shear Area ($\times 10^5$ in^2)~~		~~Moment of Inertia ($\times 10^{11}$ in^4)~~		~~Shear Center (in)~~		~~Axial Area~~ ~~A_a ($\times 10^5$ in^2)~~	~~Centroid (in)~~	
		~~A_x NS~~	~~A_y EW~~	~~I_{yy} NS~~	~~I_{xx} EW~~	~~X_s NS~~	~~Y_s EW~~		~~X_c NS~~	~~Y_c EW~~
~~CV11~~	~~0.143~~	~~1.27~~	~~1.27~~	~~0.0715~~	~~0.0715~~	~~0.00~~	~~0.00~~	~~0.0147~~	~~0.0~~	~~0.0~~
~~CV10~~	~~0.837~~	~~1.27~~	~~1.27~~	~~0.418~~	~~0.418~~	~~0.00~~	~~0.00~~	~~0.168~~	~~0.0~~	~~0.0~~
~~CV09~~	~~1.72~~	~~1.27~~	~~1.27~~	~~0.860~~	~~0.860~~	~~0.00~~	~~0.00~~	~~0.814~~	~~0.0~~	~~0.0~~
~~CV08~~	~~2.43~~	~~1.44~~	~~1.44~~	~~1.21~~	~~1.21~~	~~0.00~~	~~0.00~~	~~3.27~~	~~0.0~~	~~0.0~~
~~CV07~~	~~2.55~~	~~1.50~~	~~1.50~~	~~1.28~~	~~1.28~~	~~0.00~~	~~0.00~~	~~3.01~~	~~0.0~~	~~0.0~~
~~CV06~~	~~2.55~~	~~1.50~~	~~1.50~~	~~1.28~~	~~1.28~~	~~0.00~~	~~0.00~~	~~3.01~~	~~0.0~~	~~0.0~~
~~CV05~~	~~2.55~~	~~1.50~~	~~1.50~~	~~1.28~~	~~1.28~~	~~0.00~~	~~0.00~~	~~3.01~~	~~0.0~~	~~0.0~~
~~CV04~~	~~2.55~~	~~1.50~~	~~1.50~~	~~1.28~~	~~1.28~~	~~0.00~~	~~0.00~~	~~3.01~~	~~0.0~~	~~0.0~~
~~CV03~~	~~2.55~~	~~1.50~~	~~1.50~~	~~1.28~~	~~1.28~~	~~0.00~~	~~0.00~~	~~3.01~~	~~0.0~~	~~0.0~~
~~CV02~~	~~2.55~~	~~1.50~~	~~1.50~~	~~1.28~~	~~1.28~~	~~0.00~~	~~0.00~~	~~3.01~~	~~0.0~~	~~0.0~~
~~CV01~~	~~2.55~~	~~1.50~~	~~1.50~~	~~1.28~~	~~1.28~~	~~0.00~~	~~0.00~~	~~3.01~~	~~0.0~~	~~0.0~~

Table 3H.2-4 Mass Properties of Stick Model (Containment Internal Structure)

Symbol	Description	Location			Lumped Mass Inertia			
		X (ft)	Y (ft)	Z (ft)	Weight (kip)	Jxx ($x10^6$ kip-ft^2)	Jyy ($x10^6$ kip-ft^2)	Jzz ($x10^6$ kip-ft^2)
IC09	Upper level of P/R room	39.29	0.00	139.50	716	0.0553	0.0306	0.0792
IC08	Change in P/R room wall thickness	39.29	0.00	112.33	2,080	0.2354	0.1632	0.2299
IC18	P/R support	39.24	0.00	110.75	342	0.0251	0.0133	0.0377
IC07	P/R room operation floor	36.25	0.12	76.42	1,070	0.0889	0.0518	0.1180
IC71	-	8.11	-43.98	112.00	817	0.0622	0.1917	0.2535
IC72	-	7.29	44.03	112.00	1,040	0.0792	0.2430	0.3215
IC61	Top of SG wall	3.94	-37.73	96.58	2,160	0.1680	0.5103	0.6708
IC62	Top of SG wall	3.88	37.65	96.58	2,200	0.1708	0.5180	0.6811
IC05	Operation floor level	3.36	0.74	76.42	15,099	12.99	12.99	25.76
IC15	SG support level	3.36	0.74	59.17	220	0.1778	0.1778	0.3549
IC04	R/B 3rd floor level	1.92	-0.61	50.17	14,900	12.08	12.08	23.96
IC14	SG support level	1.92	-0.61	45.67	353	0.2840	0.2840	0.5682
IC03	Reactor vessel support	-2.28	0.13	35.88	8,841	5.971	5.971	11.875
IC02	R/B 2nd floor level	-2.38	-0.18	25.25	17,400	22.99	22.99	45.85
IC01	Pressure header room	1.22	0.05	16.00	18,500	24.38	24.38	48.61

Note: All node locations are in relationship to the analysis model. Datum point (0, 0, 0) for axes measurements is equal to 2'-7" below standard plant ground elevation, at the center of PCCV. Refer to Figure 3H.2-1 for orientation of x, y, and z axes.

~~Mass Name~~	~~Elevation (in)~~	~~Weight* ($\times 10^6$ lb)~~		~~Weight Moment of Inertia ($\times 10^{12}$ lb·in^2)~~			~~Mass Center (in)~~	
		~~W_h~~	~~W_v~~	~~J_{yy} NS~~	~~J_{xx} EW~~	~~J_{zz} Torsional~~	~~X_g NS~~	~~Y_g EW~~
~~IC09~~	~~1,674~~	~~0.716~~	~~0.716~~	~~0.00441~~	~~0.00797~~	~~0.0114~~	~~472.5~~	~~-0.4~~
~~IC08~~	~~1,348~~	~~2.08~~	~~2.08~~	~~0.0235~~	~~0.0339~~	~~0.0331~~	~~475.7~~	~~0.2~~
~~IC18~~	~~1,329~~	~~0.342~~	~~0.011~~	~~0.00192~~	~~0.00362~~	~~0.00543~~	~~475.7~~	~~0.2~~
~~IC07~~	~~917~~	~~1.07~~	~~1.07~~	~~0.00746~~	~~0.0128~~	~~0.0170~~	~~435.0~~	~~1.4~~
~~IC71~~	~~1,344~~	~~0.817~~	~~0.817~~	~~0.0276~~	~~0.00895~~	~~0.0365~~	~~97.3~~	~~-527.7~~
~~IC72~~	~~1,344~~	~~1.04~~	~~1.04~~	~~0.0350~~	~~0.0114~~	~~0.0463~~	~~87.5~~	~~528.3~~
~~IC61~~	~~1,159~~	~~3.27~~	~~2.16~~	~~0.112~~	~~0.0375~~	~~0.146~~	~~47.3~~	~~-452.8~~
~~IC62~~	~~1,159~~	~~3.30~~	~~2.20~~	~~0.113~~	~~0.0379~~	~~0.147~~	~~46.6~~	~~451.8~~
~~IC05~~	~~917~~	~~17.2~~	~~15.1~~	~~2.14~~	~~2.14~~	~~4.23~~	~~40.3~~	~~8.9~~
~~IC15~~	~~710~~	~~0.441~~	~~0.551~~	~~0.0511~~	~~0.0511~~	~~0.102~~	~~40.3~~	~~8.9~~
~~IC04~~	~~602~~	~~14.9~~	~~14.9~~	~~1.74~~	~~1.74~~	~~3.45~~	~~23.0~~	~~-7.3~~
~~IC14~~	~~548~~	~~2.89~~	~~0.220~~	~~0.335~~	~~0.335~~	~~0.670~~	~~23.0~~	~~-7.3~~
~~IC03~~	~~430.52~~	~~11.7~~	~~12.0~~	~~1.14~~	~~1.14~~	~~2.26~~	~~-7.2~~	~~1.0~~
~~IC02~~	~~303~~	~~17.4~~	~~24.3~~	~~3.31~~	~~3.61~~	~~6.60~~	~~-7.6~~	~~2.1~~
~~IC01~~	~~192~~	~~18.5~~	~~18.5~~	~~3.51~~	~~3.51~~	~~7.00~~	~~14.6~~	~~0.6~~

~~Sub total : 95.60×10^6 (lb)~~

~~*: W_h is used for horizontal analyses, and W_v is used for vertical analyses~~

Table 3H.2-5 Element Properties of Stick Model (Containment Internal Structure)

Symbol	Height (ft)	Bottom Elevation (ft)	Eccentricity		Cross Sectional Properties						Shear Center (ft)	
			X (ft)	Y (ft)	Az (ft^2)	Ax (ft^2)	Ay (ft^2)	Iyy (ft^4)	Ixx (ft^4)	Izz (ft^4)	x_s NS	y_s EW
IC09	27.17	112.33	-39.29	0	285.4	82.6	143.1	2.07E+04	3.19E+04	3.35E+04	41.86	0
IC08	1.58	110.75	-39.24	0	379.2	97.2	152.1	2.53E+04	4.10E+04	3.63E+04	41.75	0
IC18	34.33	76.42	-39.24	0	379.2	97.2	152.1	2.53E+04	4.10E+04	3.63E+04	41.75	0
IC71	-	-	3.31	-40.33	370.8	133.3	118.8	2.40E+04	1.21E+04	1.27E+04	4	-39.44
IC72	-	-	3.31	40.33	370.8	133.3	118.8	2.40E+04	1.21E+04	1.27E+04	4	39.44
IC61	20.17	76.42	3.3	-39.79	770.8	361.1	191.7	5.40E+04	2.73E+04	1.67E+05	3.33	-36.52
IC62	20.17	76.42	3.3	39.79	770.8	361.1	191.7	5.40E+04	2.73E+04	1.67E+05	3.33	36.52
IC05	17.25	59.17	-0.61	-0.04	3035	1521	993.1	1.66E+06	1.31E+06	3.53E+06	-1.3	-0.23
IC15	9	50.17	-0.61	-0.04	3035	1521	993.1	1.66E+06	1.31E+06	3.53E+06	-1.3	-0.23
IC04	4.5	45.67	0.04	-0.43	2931	1465	1076	1.71E+06	1.38E+06	3.47E+06	-1.48	-0.24
IC14	10.06	35.6	0.04	-0.43	2931	1465	1076	1.71E+06	1.38E+06	3.47E+06	-1.48	-0.24
IC03	10.35	25.25	0.65	-0.39	3833	1833	1729	1.99E+06	1.24E+06	3.12E+06	-1.59	-0.07
IC02	9.25	16	-2.38	-0.18	7917	5257	5021	3.39E+06	1.77E+06	8.25E+06	-1.28	0
IC01	14.08	1.92	-3.68	-0.08	10347	8542	8333	3.53E+06	3.52E+06	8.83E+06	-0.87	0

Note: All node locations are in relationship to the analysis model. Datum point (0, 0, 0) for axes measurements is equal to 2'-7" below standard plant ground elevation, at the center of PCCV. Refer to Figure 3H.2-1 for orientation of x, y, and z axes.

Element Name	Torsional Const. I_{zz} ($\times 10^{11}$ in^4)	Shear Area ($\times 10^5$ in^2)		Moment of Inertia ($\times 10^{11}$ in^4)		Shear Center (in)		Axial Area A_a ($\times 10^5$ in^2)	Centroid (in)	
		A_x NS	A_y EW	I_{yy} NS	I_{xx} EW	X_s NS	Y_s EW		X_c NS	Y_c EW
C09	0.00694	0.119	0.206	0.00429	0.00662	502.3	0.0	0.411	471.5	0.0
IC08	0.00752	0.140	0.219	0.00525	0.00851	501.0	0.0	0.546	470.9	0.0
IC18	0.00752	0.140	0.219	0.00525	0.00851	501.0	0.0	0.546	470.9	0.0
IC07	-	-	-	-	-	-	-	-	-	-
IC71	0.00263	0.192	0.171	0.00497	0.00250	48.0	-473.3	0.534	39.7	-483.9
IC72	0.00263	0.192	0.171	0.00497	0.00250	48.0	473.3	0.534	39.7	483.9
IC61	0.0347	0.520	0.276	0.0112	0.00565	40.0	-438.2	1.11	39.6	-477.5
IC62	0.0347	0.520	0.276	0.0112	0.00565	40.0	438.2	1.11	39.6	477.5
IC05	0.731	2.19	1.43	0.345	0.271	-15.6	-2.7	4.37	-7.3	-0.5
IC15	0.731	2.19	1.43	0.345	0.271	-15.6	-2.7	4.37	-7.3	-0.5
IC04	0.720	2.11	1.55	0.354	0.286	-17.8	-2.9	4.22	0.5	-5.2
IC14	0.720	2.11	1.55	0.354	0.286	-17.8	-2.9	4.22	0.5	-5.2
IC03	0.646	2.64	2.49	0.412	0.257	-19.1	-0.8	5.52	7.8	-4.7
IC02	1.710	7.57	7.23	0.703	0.367	-15.4	0.0	11.4	-28.5	-2.1
IC01	1.830	12.30	12.00	0.732	0.729	-10.4	0.0	14.9	-44.1	-0.9

Table 3H.2-6 Mass Properties of Stick Model (R/B)

Symbol	Description	Location			Lumped Mass Inertia			
		X (ft)	Y (ft)	Z (ft)	Weight (kip)	Jxx ($x10^6$ kip-ft^2)	Jyy ($x10^6$ kip-ft^2)	Jzz ($x10^6$ kip-ft^2)
FH08	FH/A roof	-116.67	17.44	154.50	6620	19.38	2.257	21.46
FH07	Top of FH/A crane rail	-120.08	18.37	125.67	4890	14.79	1.660	16.32
FH06	Center building roof	-120.81	17.41	101.00	4680	12.36	1.611	13.96
RE41	R/B 5th floor west roof	-28.46	-77.07	101.00	9450	1.389	45.21	46.53
RE42	R/B 5th floor east roof	3.48	79.00	101.00	7590	1.208	20.76	21.94
RE05	MS/FW room roof	115.42	6.17	115.50	19200	72.92	9.306	81.94
RE04	R/B 5th floor (MS/FW room)	119.54	-7.83	101.00	16600	62.92	7.986	70.83
RE03	R/B 4th floor operation floor	9.95	2.01	76.42	67700	257.6	538.9	798.6
RE02	R/B 3rd floor	-5.50	-2.93	50.17	72400	275.7	577.1	854.2
RE01	R/B 2nd floor	-5.34	-4.09	25.25	68600	261.1	546.5	805.6

Note: All node locations are in relationship to the analysis model. Datum point (0, 0, 0) for axes measurements is equal to 2'-7" below standard plant ground elevation, at the center of PCCV. Refer to Figure 3H.2-1 for orientation of x, y, and z axes.

~~Mass Name~~	~~Elevation (in)~~	~~Weight W ($\times 10^6$ lb)~~	~~Weight Moment of Inertia ($\times 10^{12}$ lb·in^2)~~			~~Mass Center (in)~~	
			~~J_{yy} NS~~	~~J_{xx} EW~~	~~J_{zz} Torsional~~	~~X_g NS~~	~~Y_g EW~~
~~FH08~~	~~1,854~~	~~6.25~~	~~0.303~~	~~2.38~~	~~2.68~~	~~-1,400.0~~	~~209.3~~
~~FH07~~	~~1,508~~	~~4.52~~	~~0.218~~	~~1.72~~	~~1.94~~	~~-1,445.9~~	~~224.5~~
~~FH06~~	~~1,212~~	~~4.68~~	~~0.232~~	~~1.78~~	~~2.01~~	~~-1,449.7~~	~~208.9~~
~~RE41~~	~~1,212~~	~~9.45~~	~~6.51~~	~~0.20~~	~~6.7~~	~~-3,41.5~~	~~-924.8~~
~~RE42~~	~~1,212~~	~~7.59~~	~~2.99~~	~~0.174~~	~~3.16~~	~~41.8~~	~~948~~
~~RE05~~	~~1,386~~	~~19.2~~	~~1.34~~	~~10.5~~	~~11.8~~	~~1,385.0~~	~~74.0~~
~~RE04~~	~~1,212~~	~~16.6~~	~~1.15~~	~~9.06~~	~~10.2~~	~~1,434.5~~	~~-94.0~~
~~RE03~~	~~917~~	~~67.7~~	~~77.6~~	~~37.1~~	~~115~~	~~119.4~~	~~24.1~~
~~RE02~~	~~602~~	~~72.4~~	~~83.1~~	~~39.7~~	~~123~~	~~-66.0~~	~~-35.1~~
~~RE01~~	~~303~~	~~68.6~~	~~78.7~~	~~37.6~~	~~116~~	~~-59.7~~	~~-43.8~~

~~Subtotal: 277.0×10^6 (lb)~~

Table 3H.2-7 Element Properties of Stick Model (R/B)

Element Name	Height (ft)	Bottom Elevation (ft)	Centroid (in)		Axial Area Aa (ft^2)	Shear Area (ft^2)		Moment of Inertia ($x10^3$ ft^4)		Torsional Constant ($x10^6$ ft^4)	Shear Center (in)	
			xc NS	yc NS		Ax NS	Ay EW	Iyy NS	Ixx EW		xs NS	ys EW
FH08	28.83	125.67	-120.08	18.37	621	253	370	328	4,967	5.3	-119.8	17.5
FH07	24.67	101.00	-120.08	18.37	631	253	370	328	5,025	5.4	-119.8	17.5
FH06	24.58	76.42	-120.73	14.13	610	253	345	328	4,404	4.7	-121.2	18.6
RE41	24.58	76.42	-28.58	-92.73	1,375	826	333	2,826	38	2.9	-35.4	-99.3
RE42	24.58	76.42	33.59	86.54	1,063	567	370	757	46	0.5	53.1	97.1
RE05	14.50	101.00	127.80	6.84	2,667	1,417	1,111	878	2,874	9.0	140.5	10.1
RE04	24.58	76.42	124.98	4.28	3,063	1,479	1,507	892	3,014	10.0	128.5	7.3
RE03	26.25	50.17	-5.73	-1.01	9,514	4,875	5,132	21,412	14,853	103.7	-23.6	-3.4
RE02	24.92	25.25	-5.34	-4.09	10,417	5,521	5,410	23,148	13,503	109.5	-13.3	-6.1
RE01	21.67	3.58	-0.03	-2.09	10,833	5,618	5,757	22,184	14,130	113.8	-5.8	-2.9

Note: All node locations are in relationship to the analysis model. Datum point (0, 0, 0) for axes measurements is equal to 2'-7" below standard plant ground elevation, at the center of PCCV. Refer to Figure 3H.2-1 for orientation of x, y, and z axes.

~~Element Name~~	~~Torsional Const.~~ I_{zz} ~~($\times 10^{11}$ in^4)~~	~~Shear Area ($\times 10^5$ in^2)~~		~~Moment of Inertia ($\times 10^{11}$ in^4)~~		~~Shear Center (in)~~		~~Axial Area~~ A_a ~~($\times 10^5$ in^2)~~	~~Centroid (in)~~	
		A_x ~~NS~~	A_y ~~EW~~	I_{yy} ~~NS~~	I_{xx} ~~EW~~	X_s ~~NS~~	Y_s ~~EW~~		X_c ~~NS~~	Y_c ~~EW~~
~~FH08~~	~~0.488~~	~~0.365~~	~~0.898~~	~~0.0176~~	~~0.342~~	~~-1,437.5~~	~~210.0~~	~~1.51~~	~~-1,440.9~~	~~220.4~~
~~FH07~~	~~0.757~~	~~0.608~~	~~0.898~~	~~0.0293~~	~~0.342~~	~~-1,437.5~~	~~210.0~~	~~1.8~~	~~-1,441.6~~	~~220.0~~
~~FH06~~	~~0.761~~	~~0.616~~	~~0.851~~	~~0.0308~~	~~0.279~~	~~-1,454.5~~	~~222.8~~	~~1.75~~	~~-1,448.8~~	~~169.6~~
~~RE41~~	~~0.610~~	~~1.19~~	~~0.479~~	~~0.586~~	~~0.00795~~	~~-424.2~~	~~-1,191.0~~	~~1.98~~	~~-342.9~~	~~-1,112.7~~
~~RE42~~	~~0.103~~	~~0.816~~	~~0.533~~	~~0.157~~	~~0.00957~~	~~637.3~~	~~1,165.6~~	~~1.53~~	~~403.1~~	~~1,038.5~~
~~RE05~~	~~1.86~~	~~2.04~~	~~1.6~~	~~0.182~~	~~0.596~~	~~1,686.1~~	~~121.2~~	~~3.84~~	~~1,533.6~~	~~82.1~~
~~RE04~~	~~2.08~~	~~2.13~~	~~2.17~~	~~0.185~~	~~0.625~~	~~1,542.2~~	~~87.1~~	~~4.41~~	~~1,499.7~~	~~51.4~~
~~RE03~~	~~21.5~~	~~7.02~~	~~7.39~~	~~4.44~~	~~3.08~~	~~-283.4~~	~~-40.2~~	~~13.7~~	~~-68.8~~	~~-12.1~~
~~RE02~~	~~22.7~~	~~7.95~~	~~7.79~~	~~4.8~~	~~2.8~~	~~-159.7~~	~~-72.9~~	~~15~~	~~-64.1~~	~~-49.1~~
~~RE01~~	~~23.6~~	~~8.09~~	~~8.29~~	~~4.6~~	~~2.93~~	~~-69.0~~	~~-34.7~~	~~15.6~~	~~-0.4~~	~~-25.1~~

Table 3H.2-8 Mass Properties of Stick Model (Basemat)

Symbol	Description	Location			Lumped Mass Inertia			
		X (ft)	Y (ft)	Z (ft)	Weight (kip)	Jxx ($x10^6$ kip-ft^2)	Jyy ($x10^6$ kip-ft^2)	Jzz ($x10^6$ kip-ft^2)
CV00	PCCV Ground Floor	0.00	0.00	1.92	3,941	11.67	11.67	23.19
RE00	R/B Ground Floor	1.24	-0.25	3.58	116,019	435.6	859.7	1368
IC00	CIS Ground Floor	1.22	0.05	1.92	21,801	28.89	28.89	57.49
BS01	Basement	2.43	0.75	-26.08	187,000	722.2	1,500	2,201

Subtotal weight: 328,761 kip

Note: All node locations are in relationship to the analysis model. Datum point (0, 0, 0) for axes measurements is equal to 2'-7" below standard plant ground elevation, at the center of PCCV. Refer to Figure 3H.2-1 for orientation of x, y, and z axes.

~~Mass Name~~	~~Elevation (in)~~	~~Weight W ($\times10^6$lb)~~	~~Weight Moment of Inertia ($\times10^{12}$lb·in2)~~			~~Mass Center (in)~~	
			~~Jyy NS~~	~~Jxx EW~~	~~Jzz Torsional~~	~~Xg NS~~	~~Yg EW~~
~~CV00~~	~~23~~	~~3.94~~	~~1.68~~	~~1.68~~	~~3.34~~	~~0.0~~	~~0.0~~
~~RE00~~	~~43~~	~~117~~	~~134~~	~~64.3~~	~~198~~	~~14.9~~	~~-3.0~~
~~IC00~~	~~23~~	~~21.8~~	~~4.16~~	~~4.16~~	~~8.28~~	~~14.6~~	~~0.6~~
~~BS01~~	~~-313.0~~	~~187~~	~~216~~	~~104~~	~~317~~	~~29.1~~	~~9.0~~
~~BB01*~~	~~-435~~	~~-~~	~~-~~	~~-~~	~~-~~	~~0.0~~	~~0.0~~

~~Subtotal: 329.7×10^6 (lb)~~

~~*: BB01 is a subordinate point of BS01.~~

~~Table 3H.2-11 Mass Properties of Stick Model (PS/B)~~

~~Mass Name~~	~~Elevation (in)~~	~~Weight (×106lb) W~~	~~Weight Moment of Inertia (×1012lb·in2)~~			~~Mass Center (in)~~	
			~~Jyy NS~~	~~Jxx EW~~	~~Jzz Torsional~~	~~xg NS~~	~~yg EW~~
~~PSB2~~	~~474.0~~	~~8.74~~	~~0.508~~	~~1.39~~	~~1.89~~	~~394.6~~	~~656.7~~
~~PSB1~~	~~43.0~~	~~11.4~~	~~0.667~~	~~1.81~~	~~2.46~~	~~398.2~~	~~649.9~~
~~BSTP*~~	~~-316.0~~	~~—~~	~~—~~	~~—~~	~~—~~	~~—~~	~~—~~
~~BASE~~	~~-375.5~~	~~17.0~~	~~1.02~~	~~2.74~~	~~3.68~~	~~399.5~~	~~648.0~~
~~BSBM*~~	~~-435.0~~	~~—~~	~~—~~	~~—~~	~~—~~	~~—~~	~~—~~

~~Subtotal : 37.16×10^{6} (lb)~~

~~Note * = BSTP and BSBM are subordinate points of BASE.~~

~~Table 3H.2-12 Element Properties of Stick Model (PS/B)~~

~~Element Name~~	~~Torsional Const. ($\times10^{11}$in4) Izz~~	~~Shear Area ($\times10^{5}$in2)~~		~~Moment of Inertia ($\times10^{11}$in4)~~		~~Shear Center (in)~~		~~Axial Area ($\times10^{5}$in2) Aa~~	~~Centroid (in)~~	
		~~Ax NS~~	~~Ay EW~~	~~Iyy NS~~	~~Ixx EW~~	~~Xs NS~~	~~Ys EW~~		~~xc NS~~	~~yc EW~~
~~PSB2~~	~~0.297~~	~~0.555~~	~~0.577~~	~~0.0619~~	~~0.207~~	~~397.0~~	~~689.6~~	~~1.13~~	~~417.8~~	~~703.9~~
~~PSB1~~	~~0.412~~	~~0.962~~	~~0.936~~	~~0.0922~~	~~0.273~~	~~393.2~~	~~664.5~~	~~1.83~~	~~407.9~~	~~652.2~~

~~Table 3H.2-13 Spring Properties for Internodal Spring Elements~~

	~~Location~~	~~Sort~~		~~Spring Value~~	~~Damping Value~~
~~Containment Internal Structure~~	~~Area at lower pressurizer support~~ ~~IC07-JC05~~ ~~(2)~~	~~NS~~	~~Horizontal~~	~~infinity~~	~~h=5%~~
			~~Rotational~~	~~6.75×10^{12} lb·in/rad~~	
		~~EW~~	~~Horizontal~~	~~infinity~~	
			~~Rotational~~	~~1.09×10^{13} lb·in/rad~~	
		~~Vertical~~		~~infinity~~	
		~~Torsion~~		~~infinity~~	
~~R/B~~	~~Roof area 1~~ ~~(1)~~ ~~(RE42-RE04)~~	~~NS~~	~~Horizontal~~	~~infinity~~	~~h=7%~~
		~~EW~~	~~Horizontal~~	~~infinity~~	
	~~Roof area 2~~ ~~(1)~~ ~~(RE41-RE04)~~	~~NS~~	~~Horizontal~~	~~infinity~~	
		~~EW~~	~~Horizontal~~	~~infinity~~	

~~Notes:~~

1. ~~RE41, RE42, and RE04 are linked by rigid translational springs. No link elements are set between RE41, RE-42 and FH06. See Figure 3H.2-1 for the overall configuration of the R/B-PCCV-Containment Internal Structure lumped mass stick model.~~

2. ~~JC05 is a subordinate point of IC05 and located at the same coordinate as IC07. JC05 and IC07 are connected by internodal spring elements shown in the above table.~~

~~Table 3H.2-15 SSI Lumped Parameters (PS/B)~~

~~(Horizontal)~~

~~Direction~~		~~Horizontal~~		~~Rotational~~	
		~~Spring Constant ($\times 10^8$ lb/in)~~	~~Damping Coefficient ($\times 10^7$ lb-s/in)~~	~~Spring Constant ($\times 10^{14}$ lb-in/rad)~~	~~Damping Coefficient ($\times 10^{13}$ lb-in-s/rad)~~
~~NS~~ ~~K_x:Horizontal~~ ~~K_{yy}Rotational~~	~~Soft~~	~~0.712~~	~~0.120~~	~~0.162~~	~~0.0208~~
	~~Medium 1~~	~~9.94~~	~~0.480~~	~~2.17~~	~~0.0797~~
	~~Medium 2~~	~~36.9~~	~~0.960~~	~~8.06~~	~~0.160~~
	~~Hard Rock~~	~~Fixed Base Assumption*~~			
~~EW~~ ~~K_y:Horizontal~~ ~~K_{xx}:Rotational~~	~~Soft~~	~~0.655~~	~~0.108~~	~~0.356~~	~~0.0542~~
	~~Medium 1~~	~~9.14~~	~~0.450~~	~~4.76~~	~~0.209~~
	~~Medium 2~~	~~34.0~~	~~0.900~~	~~17.7~~	~~0.421~~
	~~Hard Rock~~	~~Fixed Base Assumption*~~			

~~(Vertical)~~

~~Direction~~		~~Spring Constant ($\times 10^8$ lb/in)~~	~~Damping Coefficient ($\times 10^7$ lb-s/in)~~
~~UD~~ ~~K_z~~	~~Soft~~	~~0.928~~	~~0.397~~
	~~Medium 1~~	~~12.4~~	~~1.52~~
	~~Medium 2~~	~~46.1~~	~~3.03~~
	~~Hard Rock~~	~~Fixed Base Assumption*~~	

~~(Torsional)~~

~~Direction~~		~~Spring Constant ($\times 10^{14}$ lb-in/rad)~~	~~Damping Coefficient ($\times 10^{13}$ lb-in-s/rad)~~
~~Torsional~~ ~~K_{zz}~~	~~Soft~~	~~0.317~~	~~0.0251~~
	~~Medium 1~~	~~4.59~~	~~0.105~~
	~~Medium 2~~	~~17.0~~	~~0.210~~
	~~Hard Rock~~	~~Fixed Base Assumption*~~	

~~* The points located at the top of the basemat (BSTP) is considered as the fixed end point when a fixed base assumption is adopted.~~

~~Table 3H.3-10 Lumped Mass Stick Model Design Shear Forces and Moments~~

~~Model~~	~~Mass Node~~	~~Elevation (in)~~	~~N-S Direction~~		~~E-W Direction~~	
			~~Shear Force (kip)~~	~~Moment (kip-ft)~~	~~Shear Force (kip)~~	~~Moment (kip-ft)~~
~~PS/B~~	~~PSB2~~	~~474~~	~~7,170~~	~~285,000~~	~~7,450~~	~~326,000~~
	~~PSB1~~	~~43~~	~~12,500~~	~~685,000~~	~~13,100~~	~~744,000~~

~~Notes:~~

~~1) The forces and moments shown above envelope all four generic subgrade conditions and are applied to the FE models for structural design as described in Section 3.8.~~

~~2) The forces and moments are obtained by combination of the three orthogonal directions used in the model by SRSS or the Newmark 100% – 40% – 40%~~

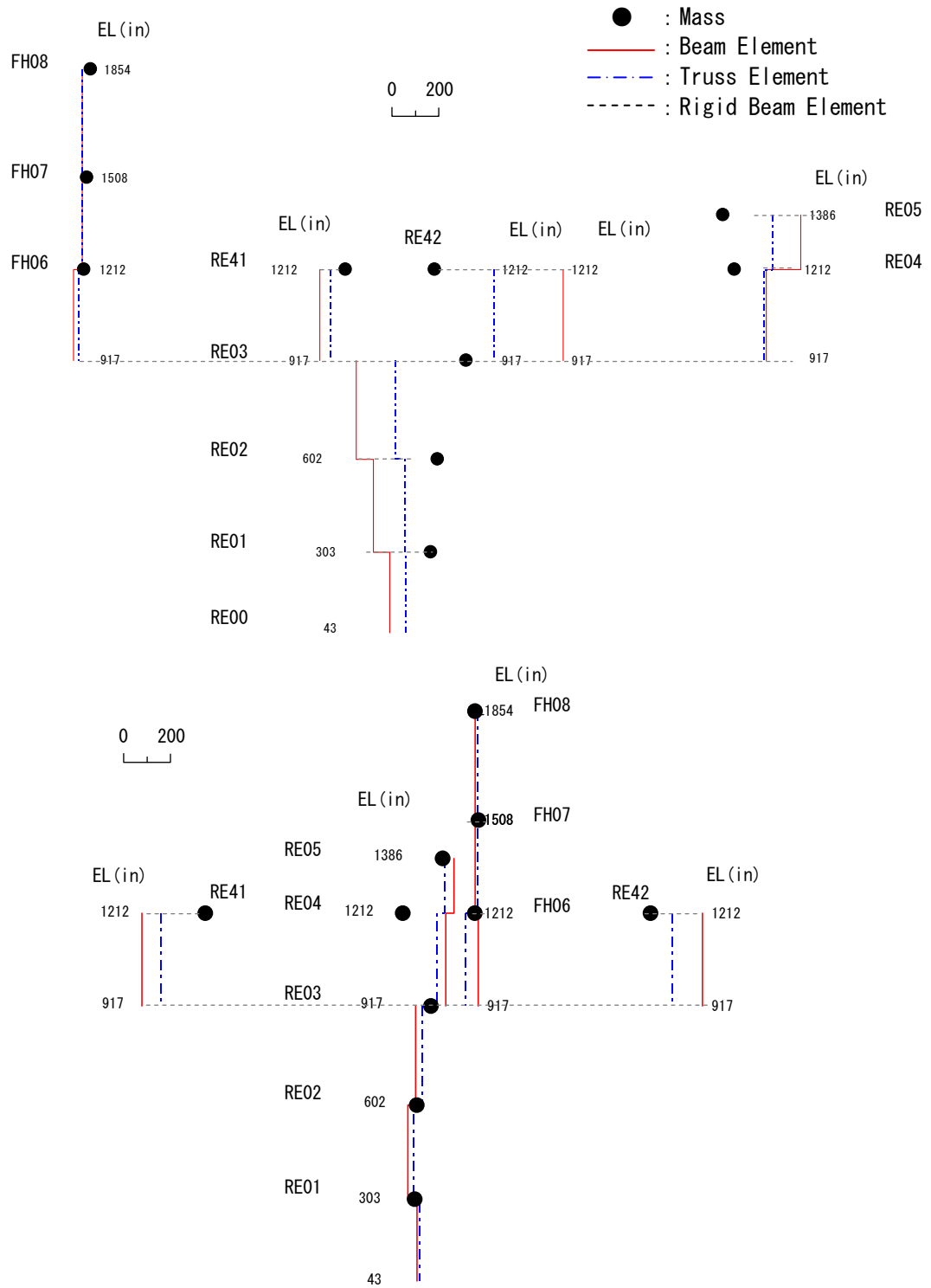

~~Note: This upper view is a north-south elevation view of the R/B model looking east (XZ plane of global model) with node point elevations given in inches. The lower view is an east-west elevation of the R/B model looking north (YZ plane of global model) with node point elevations given in inches.~~

~~Figure 3H.2-2 Elevation Views of Lumped Mass Stick Model (Sheet 1 of 4)~~

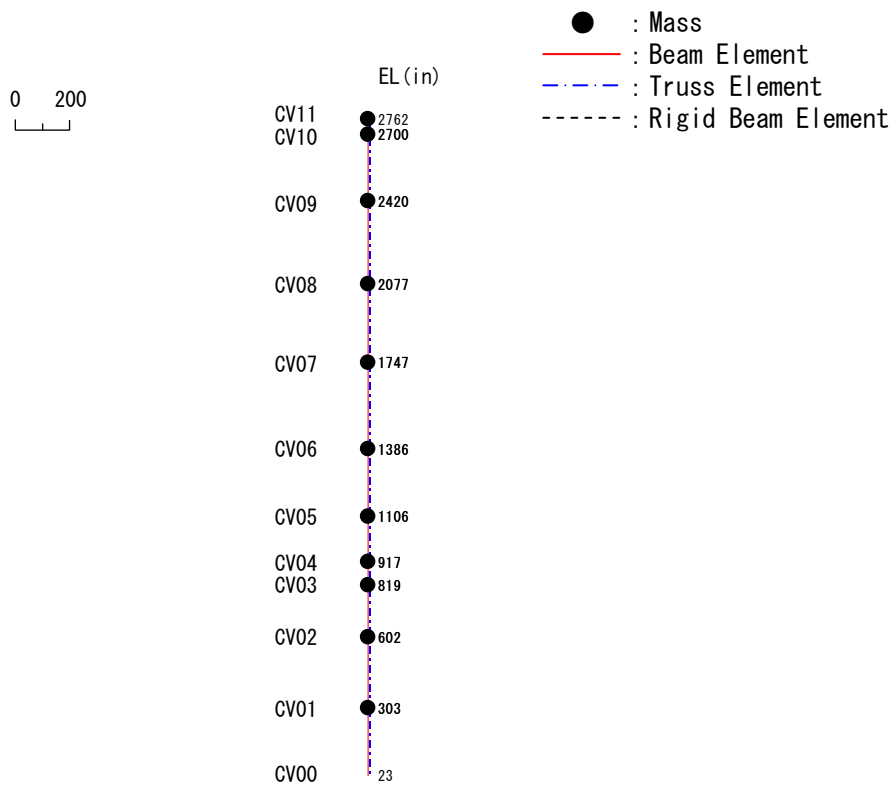

~~Note: This view is an elevation view of the PCCV model with node point elevations given in inches~~

~~**Figure 3H.2-2 Elevation Views of Lumped Mass Stick Model (Sheet 2 of 4)**~~

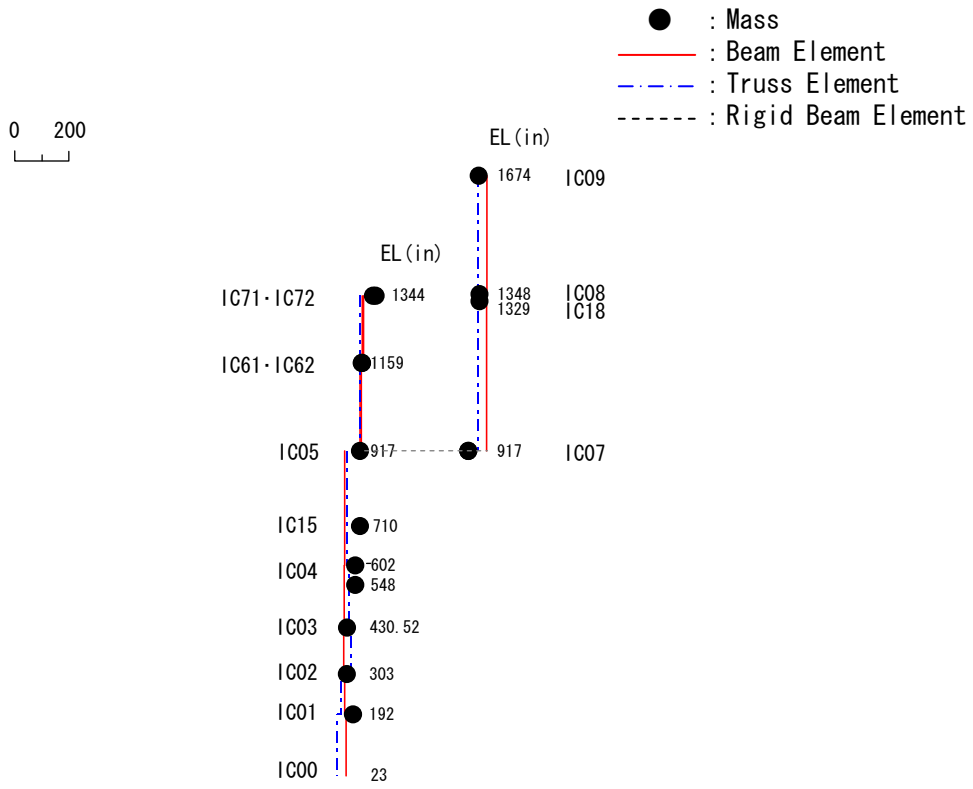

~~Note: This view is a north-south elevation view looking east at the containment internal structure model with node point elevations given in inches.~~

~~Figure 3H.2-2 Elevation Views of Lumped Mass Stick Model (Sheet 3 of 4)~~

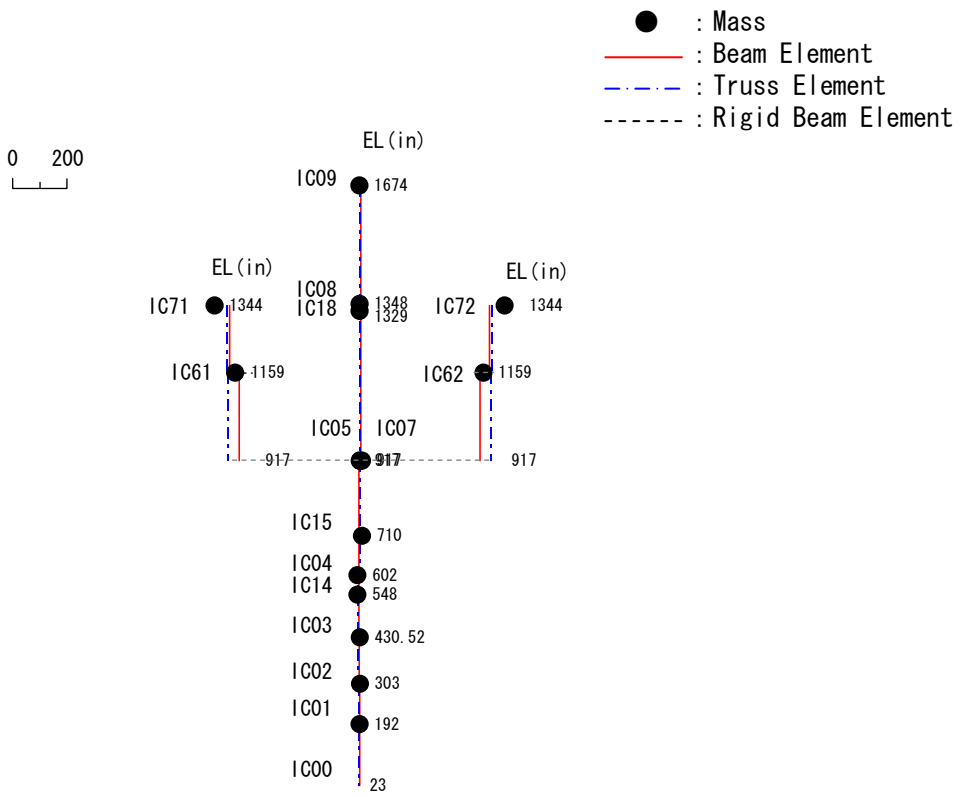

~~Note: This view is an east west elevation view of the containment internal structure model with node point elevations given in inches.~~

~~**Figure 3H.2-2 Elevation Views of Lumped Mass Stick Model (Sheet 4 of 4)**~~

Security-Related Information – Withheld Under 10 CFR 2.390

(SRI)

~~Figure 3H.2-3 Lumped Mass Stick Model for PS/B~~

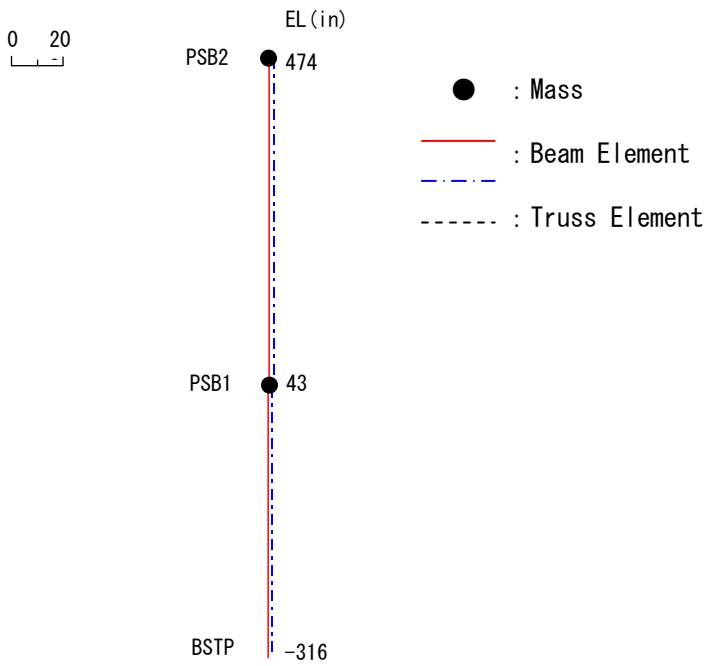

~~(NS Direction)~~

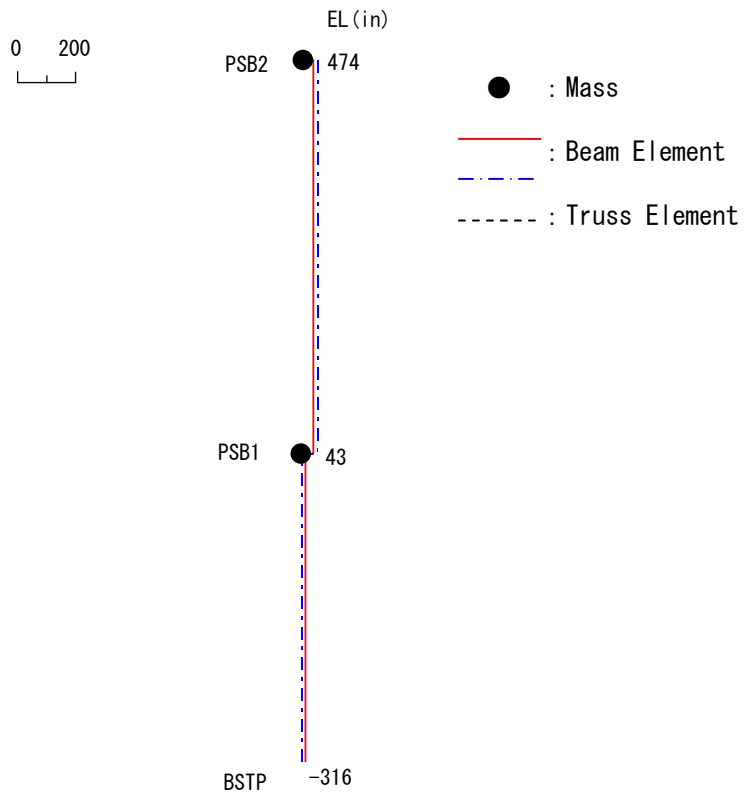

~~(EW Direction)~~

~~**Figure 3H.2-4 Elevation Views of PS/Bs Lumped Mass Stick Model**~~

DCD_03.04.01-22

Table 3K-4 PS/B Components Protected From Internal Flooding (Sheet 1 of 7)

Item No.	Equipment Tag	Description	Location					Flood Elevation above Floor [ft]	Notes
			Building	Side	Floor Elevation	Fire Zone No.	Location Elevation above Floor		
1	VRS-RFN-251A	A-Class 1E Battery Room Exhaust Fan	PS/B	E	3'-7"	FA3-104-04	N/A	-	1
2	VRS-RFN-251B	B-Class 1E Battery Room Exhaust Fan	PS/B	E	3'-7"	FA3-103-03	N/A	-	1
3	VRS-RFN-251C	C-Class 1E Battery Room Exhaust Fan	PS/B	W	3'-7"	FA3-109-03	N/A	-	1
4	VRS-RFN-251D	D-Class 1E Battery Room Exhaust Fan	PS/B	W	3'-7"	FA3-111-04	N/A	-	1
5	VRS-EHD-251A	Motor Operated Damper	PS/B	E	3'-7"	FA3-104-04	N/A	-	1
6	VRS-EHD-251B	Motor Operated Damper	PS/B	E	3'-7"	FA3-103-03	N/A	-	1
7	VRS-EHD-251C	Motor Operated Damper	PS/B	W	3'-7"	FA3-109-03	N/A	-	1
8	VRS-EHD-251D	Motor Operated Damper	PS/B	W	3'-7"	FA3-111-04	N/A	-	1
9	VRS-EHD-252A	Motor Operated Damper	PS/B	E	3'-7"	FA3-104-04	N/A	-	1
10	VRS-EHD-252B	Motor Operated Damper	PS/B	E	3'-7"	FA3-103-03	N/A	-	1
11	VRS-EHD-252C	Motor Operated Damper	PS/B	W	3'-7"	FA3-109-03	N/A	-	1
12	VRS-EHD-252D	Motor Operated Damper	PS/B	W	3'-7"	FA3-111-04	N/A	-	1
13	VRS-MAH-511A	A-Essential Chiller Unit Area Air Handling Unit	PS/B	E	-26'-4"	FA3-101-01	above flood elevation	0.45	2
14	VRS-MAH-511B	B-Essential Chiller Unit Area Air Handling Unit	PS/B	E	-26'-4"	FA3-102-01	above flood elevation	0.45	2

ATTACHMENT 1

to RAI 579-4481

Table 3K-4 PS/B Components Protected From Internal Flooding (Sheet 2 of 7)

Item No.	Equipment Tag	Description	Location					Flood Elevation above Floor [ft]	Notes
			Building	Side	Floor Elevation	Fire Zone No.	Location Elevation above Floor		
15	VRS-MAH-511C	C-Essential Chiller Unit Area Air Handling Unit	PS/B	W	-26'-4"	FA3-108-01	above flood elevation	0.60	2
16	VRS-MAH-511D	D-Essential Chiller Unit Area Air Handling Unit	PS/B	W	-26'-4"	FA3-110-01	above flood elevation	0.60	2
17	VRS-MFN-511A	A-Essential Chiller Unit Area Air Handling Unit Fan	PS/B	E	-26'-4"	FA3-101-01	above flood elevation	0.45	2
18	VRS-MFN-511B	B-Essential Chiller Unit Area Air Handling Unit Fan	PS/B	E	-26'-4"	FA3-102-01	above flood elevation	0.45	2
19	VRS-MFN-511C	C-Essential Chiller Unit Area Air Handling Unit Fan	PS/B	W	-26'-4"	FA3-108-01	above flood elevation	0.60	2
20	VRS-MFN-511D	D-Essential Chiller Unit Area Air Handling Unit Fan	PS/B	W	-26'-4"	FA3-110-01	above flood elevation	0.60	2
21	VRS-MCL-511A	A-Essential Chiller Unit Area Air Handling Unit Cooling Coil	PS/B	E	-26'-4"	FA3-101-01	above flood elevation	0.45	2
22	VRS-MCL-511B	B-Essential Chiller Unit Area Air Handling Unit Cooling Coil	PS/B	E	-26'-4"	FA3-102-01	above flood elevation	0.45	2
23	VRS-MCL-511C	C-Essential Chiller Unit Area Air Handling Unit Cooling Coil	PS/B	W	-26'-4"	FA3-108-01	above flood elevation	0.60	2
24	VRS-MCL-511D	D-Essential Chiller Unit Area Air Handling Unit Cooling Coil	PS/B	W	-26'-4"	FA3-110-01	above flood elevation	0.60	2
25	VRS-MEH-511A	A-Essential Chiller Unit Area Air Handling Unit Electric Heating Coil	PS/B	E	-26'-4"	FA3-101-01	above flood elevation	0.45	2
26	VRS-MEH-511B	B-Essential Chiller Unit Area Air Handling Unit Electric Heating Coil	PS/B	E	-26'-4"	FA3-102-01	above flood elevation	0.45	2
27	VRS-MEH-511C	C-Essential Chiller Unit Area Air Handling Unit Electric Heating Coil	PS/B	W	-26'-4"	FA3-108-01	above flood elevation	0.60	2

DCD_03.04.01-22

Table 3K-4 PS/B Components Protected From Internal Flooding (Sheet 3 of 7)

Item No.	Equipment Tag	Description	Location					Flood Elevation above Floor [ft]	Notes
			Building	Side	Floor Elevation	Fire Zone No.	Location Elevation above Floor		
28	VRS-MEH-511D	D-Essential Chiller Unit Area Air Handling Unit Electric Heating Coil	PS/B	W	-26'-4"	FA3-110-01	above flood elevation	0.60	2
29	VWS-MEQ-001A	A-Essential Chiller Unit	PS/B	E	-26'-4"	FA3-101-01	above flood elevation	0.45	2
30	VWS-MEQ-001B	B-Essential Chiller Unit	PS/B	E	-26'-4"	FA3-102-01	above flood elevation	0.45	2
31	VWS-MEQ-001C	C-Essential Chiller Unit	PS/B	W	-26'-4"	FA3-108-01	above flood elevation	0.60	2
32	VWS-MEQ-001D	D-Essential Chiller Unit	PS/B	W	-26'-4"	FA3-110-01	above flood elevation	0.60	2
33	VWS-MPP-001A	A-Essential Chilled Water Pump	PS/B	E	-26'-4"	FA3-101-01	above flood elevation	0.45	2
34	VWS-MPP-001B	B-Essential Chilled Water Pump	PS/B	E	-26'-4"	FA3-102-01	above flood elevation	0.45	2
35	VWS-MPP-001C	C-Essential Chilled Water Pump	PS/B	W	-26'-4"	FA3-108-01	above flood elevation	0.60	2
36	VWS-MPP-001D	D-Essential Chilled Water Pump	PS/B	W	-26'-4"	FA3-110-01	above flood elevation	0.60	2
37	VWS-MTK-001A	A-Essential Chilled Water Compression Tank	PS/B	E	-26'-4"	FA3-101-01	above flood elevation	0.45	2
38	VWS-MTK-001B	B-Essential Chilled Water Compression Tank	PS/B	E	-26'-4"	FA3-102-01	above flood elevation	0.45	2
39	VWS-MTK-001C	C-Essential Chilled Water Compression Tank	PS/B	W	-26'-4"	FA3-108-01	above flood elevation	0.60	2
40	VWS-MTK-001D	D-Essential Chilled Water Compression Tank	PS/B	W	-26'-4"	FA3-110-01	above flood elevation	0.60	2
41	VWS-TMV-542	Chilled Water Control Valve	PS/B	E	-26'-4"	FA3-101-01	above flood elevation	0.45	2
42	VWS-TMV-552	Chilled Water Control Valve	PS/B	E	-26'-4"	FA3-102-01	above flood elevation	0.45	2

DCD_03.04.01-22

Table 3K-4 PS/B Components Protected From Internal Flooding (Sheet 4 of 7)

Item No.	Equipment Tag	Description	Location					Flood Elevation above Floor [ft]	Notes
			Building	Side	Floor Elevation	Fire Zone No.	Location Elevation above Floor		
43	VWS-TMV-562	Chilled Water Control Valve	PS/B	W	-26'-4"	FA3-108-01	above flood elevation	0.60	2
44	VWS-TMV-572	Chilled Water Control Valve	PS/B	W	-26'-4"	FA3-110-01	above flood elevation	0.60	2
45	VWS-VLV-253A	Safety Valve	PS/B	E	-26'-4"	FA3-101-01	above flood elevation	0.45	2
46	VWS-VLV-253B	Safety Valve	PS/B	E	-26'-4"	FA3-102-01	above flood elevation	0.45	2
47	VWS-VLV-253C	Safety Valve	PS/B	W	-26'-4"	FA3-108-01	above flood elevation	0.60	2
48	VWS-VLV-253D	Safety Valve	PS/B	W	-26'-4"	FA3-110-01	above flood elevation	0.60	2
49	A-EGTG	A-Class 1E Gas Turbine Generator	PS/B	E	3'-7"	FA3-104-04	N/A	-	1
50	B-EGTG	B-Class 1E Gas Turbine Generator	PS/B	E	3'-7"	FA3-103-03	N/A	-	1
51	C-EGTG	C-Class 1E Gas Turbine Generator	PS/B	W	3'-7"	FA3-109-03	N/A	-	1
52	D-EGTG	D-Class 1E Gas Turbine Generator	PS/B	W	3'-7"	FA3-111-04	N/A	-	1
53	BCP-A	A-Class 1E Battery Charger	PS/B	E	-14'-2"	FA3-117-01	N/A	-	1
54	DCC-A	A-Class 1E DC Switchboard	PS/B	E	-14'-2"	FA3-117-01	N/A	-	1
55	DCC-A1	A1-Class 1E DC Switchboard	PS/B	E	-14'-2"	FA3-117-01	N/A	-	1
56	BCP-B	B-Class 1E Battery Charger	PS/B	E	-14'-2"	FA3-118-01	N/A	-	1
57	DCC-B	B-Class 1E DC Switchboard	PS/B	E	-14'-2"	FA3-118-01	N/A	-	1
58	BCP-C	C-Class 1E Battery Charger	PS/B	W	-14'-2"	FA3-122-01	N/A	-	1
59	DCC-C	C-Class 1E DC Switchboard	PS/B	W	-14'-2"	FA3-122-01	N/A	-	1

DCD_03.04.01-22

Table 3K-4 PS/B Components Protected From Internal Flooding (Sheet 5 of 7)

Item No.	Equipment Tag	Description	Location					Flood Elevation above Floor [ft]	Notes
			Building	Side	Floor Elevation	Fire Zone No.	Location Elevation above Floor		
60	BCP-D	D-Class 1E Battery Charger	PS/B	W	-14'-2"	FA3-123-01	N/A	-	1
61	DCC-D	D-Class 1E DC Switchboard	PS/B	W	-14'-2"	FA3-123-01	N/A	-	1
62	DCC-D1	D1-Class 1E DC Switchboard	PS/B	W	-14'-2"	FA3-123-01	N/A	-	1
63	VCC-A	A-Ventilation Chiller Control Cabinet	PS/B	E	-26'-4"	FA3-101-01	above flood elevation	0.45	2
64	VCC-B	B-Ventilation Chiller Control Cabinet	PS/B	E	-26'-4"	FA3-102-01	above flood elevation	0.45	2
65	VCC-C	C-Ventilation Chiller Control Cabinet	PS/B	W	-26'-4"	FA3-108-01	above flood elevation	0.60	2
66	VCC-D	D-Ventilation Chiller Control Cabinet	PS/B	W	-26'-4"	FA3-110-01	above flood elevation	0.60	2
67	BAT-A	A-Class 1E Battery	PS/B	E	-26'-4"	FA3-115-01	above flood elevation	0.45	2
68	BAT-B	B-Class 1E Battery	PS/B	E	-26'-4"	FA3-116-01	above flood elevation	0.45	2
69	BAT-C	C-Class 1E Battery	PS/B	W	-26'-4"	FA3-120-01	above flood elevation	0.60	2
70	BAT-D	D-Class 1E Battery	PS/B	W	-26'-4"	FA3-121-01	above flood elevation	0.60	2
71	EPBA	A-Class 1E Gas Turbine Generator Control Board	PS/B	E	3'-7"	FA3-104-04	N/A	-	1
72	EPBB	B-Class 1E Gas Turbine Generator Control Board	PS/B	E	3'-7"	FA3-103-03	N/A	-	1
73	EPBC	C-Class 1E Gas Turbine Generator Control Board	PS/B	W	3'-7"	FA3-109-03	N/A	-	1

DCD_03.04.01-22

Table 3K-4 PS/B Components Protected From Internal Flooding (Sheet 6 of 7)

Item No.	Equipment Tag	Description	Location					Flood Elevation above Floor [ft]	Notes
			Building	Side	Floor Elevation	Fire Zone No.	Location Elevation above Floor		
74	EPBD	D-Class 1E Gas Turbine Generator Control Board	PS/B	W	3'-7"	FA3-111-04	N/A	-	1
75	VRS-TS-541	A - Essential Chiller Unit Area Temperature	PS/B	E	-26'-4"	FA3-101-01	above flood elevation	0.45	2
76	VRS-TS-544	A - Essential Chiller Unit Area Temperature	PS/B	E	-26'-4"	FA3-101-01	above flood elevation	0.45	2
77	VRS-TS-545	A - Essential Chiller Unit Area Temperature	PS/B	E	-26'-4"	FA3-101-01	above flood elevation	0.45	2
78	VRS-TS-551	B - Essential Chiller Unit Area Temperature	PS/B	E	-26'-4"	FA3-102-01	above flood elevation	0.45	2
79	VRS-TS-554	B - Essential Chiller Unit Area Temperature	PS/B	E	-26'-4"	FA3-102-01	above flood elevation	0.45	2
80	VRS-TS-555	B - Essential Chiller Unit Area Temperature	PS/B	E	-26'-4"	FA3-102-01	above flood elevation	0.45	2
81	VRS-TS-561	C - Essential Chiller Unit Area Temperature	PS/B	W	-26'-4"	FA3-108-01	above flood elevation	0.60	2
82	VRS-TS-564	C - Essential Chiller Unit Area Temperature	PS/B	W	-26'-4"	FA3-108-01	above flood elevation	0.60	2
83	VRS-TS-565	C - Essential Chiller Unit Area Temperature	PS/B	W	-26'-4"	FA3-108-01	above flood elevation	0.60	2
84	VRS-TS-571	D - Essential Chiller Unit Area Temperature	PS/B	W	-26'-4"	FA3-110-01	above flood elevation	0.60	2
85	VRS-TS-574	D - Essential Chiller Unit Area Temperature	PS/B	W	-26'-4"	FA3-110-01	above flood elevation	0.60	2
86	VRS-TS-575	D - Essential Chiller Unit Area Temperature	PS/B	W	-26'-4"	FA3-110-01	above flood elevation	0.60	2

DCD_03.04.01-22

Table 3K-4 PS/B Components Protected From Internal Flooding
(Sheet 7 of 7)

Notes:

1. These components are protected by water-tight door against in-flow of flooding occurring outside of compartment. In addition, these components are not required to be protected against flooding occurring inside the compartment due to redundancy of other trains/components.
2. The electrical interconnections (e.g., cables) servicing components are excluded as SSCs requiring protection against internal flooding, because the cables in PS/B are located above the internal flooding level and maintain their function in case of any internal flooding.

Chapter 4

Page	Location (e.g., subsection with paragraph/sentence/item, table with column/row, or figure)	Description of Change
4.5-2	4.5.1.1 1st paragraph 3rd paragraph	RAI No.654, 4.5.1-14 1st paragraph: The description concerning the environmental condition inside of the CRDM pressure housing is added. RAI No.654, 4.5.1-13 3rd paragraph: The description concerning precipitation hardened stainless steels is deleted.
4.5-3	4.5.2 1st paragraph 2nd paragraph 3rd paragraph	RAI No.654, 4.5.1-15 1st paragraph: The 1st paragraph excluding the last sentence is revised. RAI No.654, 4.5.1-13 2nd paragraph: Change "…sensitized material is allowed, …" to "…sensitized material is not allowed for the CRDM Pressure housing, …". RAI No.654, 4.5.1-13 3rd paragraph: The 3rd paragraph is inserted.
4.6-2	4.6.3	RAI No.540, 3.9.4-5 3rd bullet: Change "Preoperational test on site" to "Initial startup tests".

Austenitic stainless steel, nickel based alloys, and cobalt based alloys are selected for CRDM components that are in contact with the reactor coolant water because of their corrosion resistance. The material specifications are listed in Table 4.5-1. The dissolved oxygen level of primary coolant water is controlled to less than 0.1%. This low dissolved oxygen content water flows into the CRDM housing by thermal siphoning flow and drive rod movement with CRDM stepping and rod drop testing. Thus, the dissolved oxygen level at the inside of CRDM pressure housing is the same as the primary coolant water shortly after startup. In summary, a stagnant primary coolant environment that could result in dissolved oxygen content greater than 0.10 ppm during the plant operation does not exist in any portion of the CRDM.

The properties of the materials selected for the CRDM are found in Section III, Appendix I, Division 1 of the ASME Boiler and Pressure Vessel Code (ASME Code) (Reference 4.5-3) or Section II, Parts D of the ASME Code. Strain hardened and/or cold worked austenitic stainless steels are not used in CRDM components.

All other materials for use in this system are selected for their compatibility with the reactor coolant water, as described in NB-2160 and NB-3120 of the ASME Code. The tempering temperature of martensitic stainless steels ~~and the aging temperature of precipitation hardened stainless steels~~ are specified ~~for assurance that these materials will not deteriorate from stress corrosion cracking in service~~to avoid temper britteness. ~~Acceptable heat treatment temperatures include aging at 1050°F for Type 410 stainless steel~~In the case of Type 410 stainless steel; it is tempered above 1050°F.

The metallic and nonmetallic materials used in the CRDMs are the same as those used in operating plants in the United States and Japan.

4.5.1.1.1 Pressure Housing

The pressure housing material in contact with the reactor coolant water is type 316 austenitic stainless steel, which meets the requirements of ASME code Section III. Detailed description of the austenitic stainless steel for pressure housing material is given in Subsection 5.2.3. The material of the CRDM pressure housing is identified in Tables 4.5-1.

Flux rings made from ferrite material are attached around the latch housing to provide a magnetic flux route.

4.5.1.1.2 Latch Assembly

The material for the latch assembly, magnetic poles, plungers and keys is type 410 martensitic stainless steel. Where strength is not an issue, annealed type 410 stainless steel is used because of its superior magnetic properties. Springs are made of Alloy X-750. Link pins are made of cobalt alloy. Tip and pin holes of the latch arms are clad with the cobalt alloy, Stellite. Cobalt cladding is used to improve resistance for wear. Other parts are made of type 304 austenitic stainless steel. Hard chrome plating is applied for sliding surfaces. Chrome carbide coating is applied on the tips of the latch arms to improve resistance to wear.

4.5.1.1.3 Drive Rod Assembly

The material for the drive rod assembly, drive rod, unlatch button and protection sleeve is type 410 martensitic stainless steel. The coupling is fabricated from type 403 martensitic stainless steel. Springs are made of Alloy X-750 and the locking button is fabricated from cobalt alloy. Other drive rod assembly parts are made from type 304 austenitic stainless steel.

4.5.1.1.4 Coil Assembly

The coil housings in the coil assembly are ductile iron castings, selected for their suitable magnetic properties. Coils are wound on bobbins of molded glass silicon resin material, with double glass insulated copper wire. Coils are impregnated with silicon varnish under vacuum condition. A wrapping of mica sheet is secured to the coil outside diameter. The coil assembly is a proven design used in many operating plants in the United States and Japan.

4.5.1.2 Austenitic Stainless Steel Components

~~Discussions of fabrication and processing of austenitic stainless steel are provided in Subsection 5.2.3. The processes for control of welding described in Subsection 5.2.3 are applicable to the pressure housing of the CRDM~~. Austenitic stainless steel base materials for CRDM applications are used in the solution annealed condition and are not heated above 800 °F after solution annealing, other than locally by welding operations, in accordance with the recommendations listed in RG 1.44. The welding materials used for joining the austenitic stainless steels meet the requirements of the welding material specification SFA 5.9 in ASME Code Section II. In addition, the above welding materials meet the requirements of ASME Code Section III. For design temperatures up to and including 800 °F, the minimum acceptance delta ferrite is 5FN (Ferrite Number).

Manufacturing process controls for preventing intergranular corrosion of stainless steel components are used in accordance with the guidance in RG 1.44 (Reference. 4.5-5). Furnace sensitized material is not allowed for the CRDM pressure housing, and methods described in the guide are followed for cleaning and protecting austenitic stainless steels from contamination during handling, storage, testing, and fabrication and for determining the degree of sensitization during welding.

Weld metals for the pressure boundary and non-pressure boundary of CRDM components are used in accordance with the guidance in RG 1.31 (Reference 4.5-9).

The process controls during manufacturing for abrasive work on austenitic stainless steel surfaces are designed to prevent contamination that may result in stress corrosion cracking. These controls are consistent with Regulatory Position C of RG 1.37 (Reference 4.5-6).

The final surfaces are required to meet the acceptance standards specified in ASME NQA-1 (Reference 4.5-7). Tools used on austenitic stainless steel surfaces are controlled to prevent materials that could contribute to stress corrosion cracking from contaminating these surfaces.

The pressure housing of the CRDM is designed, fabricated and inspected in accordance with the ASME Code. Failure of the pressure housing is not credible.

The essential elements of the CRDS, those are required to ensure a reactor trip, are isolated from the nonessential portions of the CRDS, as described in Section 7.2. The essential components of the CRDS are protected from the effects of postulated moderate and high energy water line breaks and associated missiles that are generated as a result, as described in Subsection 3.5.1.2.

In compliance with GDC 29, it has been confirmed that the probability of a common cause failure impairing the ability of the reactor trip system to perform its safety function is extremely low, because failure of the power supply to the CRDM leads to a reactor trip (Reference 4.6-3).

In addition, the US-APWR diverse actuation system (DAS) provides the anticipated transient without scram (ATWS) mitigation system that is diverse from the reactor trip system. The DAS automatically initiates the auxiliary feedwater system and a turbine trip under conditions indicative of an ATWS. These ATWS mitigation functions are mandated for Westinghouse type PWR plants by 10 CFR 50.62. The DAS also initiates a diverse reactor trip as described in Section 7.8. Therefore, the ATWS requirements are met. The US-APWR ATWS core damage frequency is discussed in Chapter 19 which describes the probabilistic risk assessment (PRA). The US-APWR design meets the ATWS rule (10 CFR 50.62) and its ATWS core damage frequency safety goal basis.

The design of the CRDM is such that failure of the CRDM cooling system will, in the worst case, result in an individual control rod trip or a full reactor trip.

4.6.3 Testing and Verification of the CRDS

The CRDS is tested in several phases. These tests may be categorized as follows:

- Prototype test of components
- Production tests of components following manufacture in shop
- Initial startup tests~~Preoperational test on site~~
- Periodic in-service tests

These tests, which are performed to verify the proper function of CRDS, are described in Subsection 3.9.4.4 and Section 14.2. They include rod insertion and withdrawal tests, scram test, and hydrostatic tests.

4.6.4 Information for Combined Performance of Reactivity Systems

As discussed in Chapter 15, the only postulated events which assume credit for two reactivity control systems to render the plant subcritical are the steam line break (SLB) and loss-of-coolant accident (LOCA).The reactivity control systems, for which credit is taken in these accidents, are the reactor trip system and the ECCS.

Chapter 5

Page	Location (e.g., subsection with paragraph/sentence/ Item, table with column/row, or figure)	Description of Change
5.4-37	5.4.7.1	RAI No. 638, Question No. 07.06-24 Added “and design pressure with sufficient wall thickness to withstand the RCS pressure without rupture”

- The RHRS is designed to be fully operable by the control room operator during single failure for normal operation except for restoring power to the suction isolation valves.

- The RHRS is designed to be operated during mid-loop or drain down operation to allow maintenance or inspection of the reactor head, SG and reactor coolant pump seals.

- The RHR system is designed to prevent an interfacing system LOCA by two motor operated valves in series on the suction line with power lockout capability and design pressure with sufficient wall thickness to withstand the RCS pressure without rupture. In the event that both these valves are opened, the RHR system is designed to withstand high pressure and discharge the RCS inventory to the in-containment RWSP.

- The CS/RHR pump damage from overheating and loss of flow is prevented by minimum flow lines.

- The RHRS is provided with a leakage detection system to minimize the leakage from those portions of the RHR system outside of the containment that contain or may contain radioactive material following an accident.

- The RHRS is designed for protection against missiles (Refer to Section 3.5), protection against dynamic effects associated with the postulated rupture of piping and pipe whipping (Refer to Section 3.6), discharging fluids inside and outside the containment (Refer to Section 3.4), fires, loss-of-coolant accidents loads, seismic effects (Refer to Section 3.7), and to accommodate the effects of and to be compatible with the environmental conditions associated with normal operation, maintenance, testing, and postulated accidents (Refer to Section 3.11).

5.4.7.2 System Design

5.4.7.2.1 System Description

The RHRS as shown in Figure 5.4.7-1 consists of four independent subsystems, each of which receives electrical power from one of four safety buses. The P&ID for the four loop RHR system is as shown in Figure 5.4.7-2. Each subsystem includes one CS/RHR pump, one CS/RHR heat exchanger, associated piping, valves, and instrumentation necessary for operational control. Table 5.4.7-2 provides the important system design parameters and CS/RHR pump characteristic curve is as shown in Figure 5.4.7-3. The CS/RHR heat exchangers and the CS/RHR pumps have functions in both the CS system and the RHRS. The mode diagram is as shown in Figure 5.4.7-4.

The RHRS is placed in operation when the pressure and temperature of the RCS are approximately 400 psig and 350° F, respectively.

The inlet lines to the RHRS are connected to the hot legs of four reactor coolant loops (RCLs), while the return lines are connected to the cold legs of each of the RCLs. The RHRS suction lines are isolated from the RCS by two normally-closed motor-operated valves with power lockout capability that are connected in series and located inside the

Chapter 6

US-APWR DCD Chapter 6 Rev. 2, Tracking Report Rev. 6 Change List

Page	Location (e.g., subsection with paragraph/sentence/ Item, table with column/row, or figure)	Description of Change
6.2-39	6.2.1.6	RAI No.648, Question No. 06.02.06-31 Replaced “3.8.3.7.1” with “3.8.1.7” (Three portions) Added “The US-APWR containment will be designed to permit appropriate periodic inspection of all important areas. Important areas are penetrations, the liner intersection with the base concrete inside containment, locations where the floors or platforms are adjacent to the liner and the vicinity of the crane brackets.”
6.2-57	6.2.4.3.2	RAI No.648, Question No. 06.02.06-33 Added “Non-Essential Chilled Water System containment fan cooler lines,”
6.2-65	6.2.6.1	RAI No.648, Question No. 06.02.06-32 Added “except for the preoperational ILRT” in the 7th bullet. Replaced “required for proper conduct of the Type A test need not be vented or drained” with “Type B or C tested within the previous 24 calendar months need not be vented or drained during the Type A test, except for the preoperational ILRT”

6.2.1.6 Testing and Inspection

The preoperational testing and inspection and inservice testing and inspection of the containment meet ASME Code Section III requirements for containment vessels. Testing and inspection of the containment require written nondestructive examination procedures as required by ASME Code Article CC 5000 (Ref. 6.2-21). A description of the initial test program for the containment is included in Section 14.2 that applies to construction, preoperational and startup testing. Subsection 3.8.1.7~~3.8.3.7.1~~ includes construction inspection acceptance criteria. Requirements for the containment structural integrity test, containment local leak rate, and containment integrated leak rate preoperational tests are included in Subsections 14.2.12.1.61 through 14.2.12.1.63. Preoperational testing includes quality control testing of the concrete and concrete constituents in accordance with the frequencies established by Table CC-5200-1 and examination of the reinforcing systems, prestressing systems, and welds in accordance with ASME Code. Structural integrity testing is required to demonstrate the quality of construction and to verify the acceptable performance of new design features. Leakage testing of the RWSP liner (cladding) is performed in accordance with ASME Code requirements. Inspection criteria are delineated in ASME Code Article CC-5000. Failed inspection areas are repaired in accordance with ASME Code. The containment is pressure tested at a pressure of at least 1.15 times the containment design pressure prior to acceptance in accordance with the requirements of ASME Code Section III, Article CC-6000 (Ref. 6.2-22). Preoperational testing is described in detail in Chapter 3, Subsection 3.8.1.7~~3.8.3.7~~.

The US-APWR containment will be designed to permit appropriate periodic inspection of all important areas. Important areas are penetrations, the liner intersection with the base concrete inside containment, locations where the floors or platforms are adjacent to the liner and the vicinity of the crane brackets.

Inservice testing and inspection requirements are described in Subsection 3.8.1.7~~3.8.3.7~~. Subsection 6.2.4.4 provides a description of the testing and inspection of the containment isolation system. The requirements and methods used for containment leakage testing is presented in Subsection 6.2.6. The containment isolation system testing and the containment leakage testing are performed to ensure the postulated leakage from a design basis accident will be within the assumptions provided in Chapter 15, “Transient and Accident Analyses.”

6.2.1.7 Instrumentation Requirements

Instruments are installed to monitor conditions inside the containment and actuate the appropriate safety functions when an abnormal condition is sensed. Instruments monitor containment pressure, temperature, hydrogen concentration and radioactivity, and air effluent for containment depressurization.

Four narrow-range pressure detectors monitor the containment pressure over a pressure range of -7 to 80 psig. The pressure detectors are powered from independent Class-1E sources, are widely separated around the containment, and connect to their associated transmitters (outside the containment) through oil-filled instrument lines. The containment pressure activates logic to initiate a variety of ESF functions, which are

- Fire protection water supply system (FSS) injection line to reactor cavity and station service air system (SSAS) service air line, using one automatic isolation valve inside containment and one locked closed isolation valve outside containment.
- CSS containment spray line, HVAC containment supply and exhaust line, plant radiation monitoring system (RMS) containment air sampling line, WMS containment sump pump discharge line, refueling water recirculation pump suction and discharge line, instrument air system (IAS) instrument air line, Non-Essential Chilled Water System containment fan cooler lines, and FSS water supply line to containment air purification unit, using one automatic isolation valve inside and one automatic isolation valve outside the containment.
- Leakage rate testing narrow range pressure detection line, using one locked closed isolation valve inside with a pipe cap and one locked closed isolation valve outside the containment.
- Component cooling water system (CCWS) supply line to the RCPs, using two automatic containment isolation valves of which the outboard valve is capable of remote manual operation.
- CCWS return line from RCPs, using two automatic containment isolation valves, one inside and one outside of the containment, each capable of remote manual operation.

Containment isolation provisions for lines in ESF or ESF-related systems normally consist of two isolation valves in series. A single isolation valve is acceptable if the system reliability can be shown to be greater, the system is closed outside the containment, and a single active failure can be accommodated with only one isolation valve in the line. In addition, penetrations exist that do not contain isolation valves, these lines are typically blank flanged. Table 6.2.4-2 lists GDC 56 systems with single valve isolation or blank flanges and justification, in accordance with the guidance in NUREG-0800, SRP 6.2.4 (Ref. 6.2-27).

6.2.4.3.3 Evaluation of Conformance to General Design Criterion 57 of 10CFR50, Appendix A

Each line that penetrates the containment and is neither part of the RCPB nor connected directly to the containment atmosphere has at least one containment isolation valve that is automatic, locked closed, or capable of remote manual operation. These valves are outside the containment and are located as close to the containment as practical. The following systems penetrating the containment meet GDC 57 criteria:

- Main steam and feedwater system (MSFWS) feedwater line and steam generator blowdown system (SGBDS) SG blowdown line, using one automatic containment isolation valve outside the containment, each capable of remote manual operation.
- MSFWS main steam line, using one containment isolation valve outside containment capable of remote manual operation.

- All vented systems shall be drained of water or other fluids to the extent necessary to assure exposure of the system containment isolation valves to containment air test pressure and to assure they will be subjected to the post accident differential pressure.

- Systems that are required to maintain the plant in a safe condition during the test shall be operable in their normal mode, and need not be vented.

- Pathways in systems that are normally filled with fluid and operable during post-accident conditions are not required to be vented.

- Portions of the pathways outside of containment that are designed to Seismic Category I and to at least Safety Class 2 are not required to be vented.

- Pathways which are Type B or C tested within the previous 24 calendar months need not be vented or drained except for the preoperational ILRT.

- For planning or scheduling purposes, or ALARA considerations, pathways in systems which are ~~required for proper conduct of the Type A test need not be vented or drained~~ Type B or C tested within the previous 24 calendar months need not be vented or drained during the Type A test, except for the preoperational ILRT.

- Exceptions to venting and draining leakage pathways during Type A tests are in accordance with ANSI/ANS 56.8-1994 and NEI 94-01.

Type A testing is conducted in accordance with ANSIIANS-56.8-1994 (Ref. 6.2-35). The containment is slowly pressurized with clean, dry air using portable compressors, filters and dryers until the containment pressure equals the calculated accidental peak containment internal pressure, Pa. The containment atmosphere is allowed to stabilize, consistent with the guidance of ANSI/ANS-56.8 (Ref. 6.2-35), before beginning the Type A test. The test duration is consistent with the guidance of ANSI/ANS-56.8 (Ref. 6.2-35). Periodic measurements of containment pressure and humidity are collected and evaluated to determine the rate of decrease in the mass of air inside containment in accordance with the guidance of ANSI/ANS-56.8 (Ref. 6.2-35). After completing the initial Type A test, a verification test is performed to confirm the validity of the test results using the methods prescribed by ANSI/ANS-56.8 (Ref. 6.2-35).

The maximum allowable containment leakage rate, La, the calculated peak containment internal pressure for the design basis loss of coolant accident, Pa, and the acceptance criteria for the Type A tests is specified by the Technical Specifications in Subsection 5.5.16. For the initial preoperational Type A test, the integrated leak rate shall be < 0.75 La. For periodic Type A tests, the containment leakage rate acceptance criterion is 1.0 La. During the first unit startup following testing in accordance with the containment leakage rate testing program, the leakage rate acceptance criteria are < 0.75 La for Type A tests. Test methods, analysis and acceptance criteria for Type A testing meet the guidance of RG 1.163, NEI 94-01 and ANSI/ANS-56.8-1994.

Chapter 7

Page	Location (e.g., subsection with paragraph/sentence/ Item, table with column/row, or figure)	Description of Change
7.1-23	Table 7.1-2 (Sheet 3 of 8)	RAI No.638, Question No. 07.06-18 Deleted "7.6," from the column "Related Section in US-APWR" of item q.
7.2-23	Table 7.2-3 Sheet 2 of 2	RAI No.593, Question No. 07-21BTP-4 Added the item "ECCS Actuation" to the Table.
7.6-1	7.6.1	RAI No.638, Question No. 07.06-23 Revised the Subsection as follows: · Deleted "There is no manual bypass capability for interlocks important to safety." · Replaced "Abnormal" with "Bypassed and inoperable".
	7.6.1.1 first paragraph	Expressions were improved from that of response to the RAI No.638, Question No. 07.06-24 Revised the Subsection as follows: · Replaced "In US-APWR, the RHR system" with "The RHR system". · Replaced "as explained in Subsection 5.4.7.1." with "as described in Subsection 5.4.7.1.".
	7.6.1.1 first paragraph	RAI No.638, Question No. 07.06-24 Revised the Subsection as follows: · Deleted "The RHR system is able to withstand normal operating RCS pressure without rupture when both CS/RHR Pump Hot Leg Isolation Valves are inadvertently open, as explained in Subsection 5.4.7." · Replaced "Compared" with "In general, compared". · Added "In US-APWR, the RHR system is designed with sufficient wall thickness to withstand normal operating RCS pressure without rupture when both CS/RHR Pump Hot Leg Isolation Valves are inadvertently opened, as explained in Subsection 5.4.7.1." to the end of the first paragraph.

Page	Location (e.g., subsection with paragraph/sentence/ Item, table with column/row, or figure)	Description of Change
7.6-2	7.6.1.1	Expressions were improved from that of response to the RAI No.638, Question No. 07.06-19 Revised the Subsection as follows: ・ Replaced "CS/RHR pump hot leg isolation valves open permissive interlock does not have independency" with "CS/RHR pump hot leg isolation valves open permissive interlock does not have independence".
	7.6.1.1	RAI No.638, Question No. 07.06-19 Added the following description to the end of Subsection 7.6.1.1: "CS/RHR pump hot leg isolation valves open permissive interlock does not have independency and diversity in each train, because the current design of RHR system has sufficiently high reliability against overpressurization or possible radioactive release. Moreover the valves cannot be opened inadvertently because power is normally removed as described above."
7.6-5	7.6.1.5 second paragraph	RAI No.638, Question No. 07.06-17 Corrected the referenced figure number and equipment number.
	7.6.1.7	Expressions were improved from that of response to the RAI No. 528, Question No.19-421, Revised the title of the Subsection as follows: Replaced "Low-pressure letdown line isolation valve" with "Low-pressure Letdown Line Isolation Valve".
7.6-6, 7	7.6.2	RAI No.638, Question No. 07.06-18 Added the following GDCs in the list of regulation requirements applicability.
7.6-8	7.6.3	RAI No.638, Question No. 07.06-22 Revised the first item of last bulleted item to be read as follows: "There are no interlocks required to preclude inadvertent inter-ties in the US-APWR except in the CCWS, since safety systems, such as Safety Injection System, Residual Heat Removal System, Containment Spray System, and Essential Service Water System, are mechanically separated in each train."

Table 7.1-2 Regulatory Requirements Applicability Matrix (per NUREG-0800 Standard Review Plan (SRP) Sec. 7.1 Rev. 5) (Sheet 3 of 8)

Applicable Criteria		Title	I&C System							Related Section in US-APWR DCD
			RPS	ESFAS	SLS	Safety HSI	Safety DCS	PCMS	DAS	
p.	GDC 29	Protection Against AOOs	X	X	X	X	X	X		7.2 to 7.7, 7.9
q.	GDC 33	Reactor Coolant Makeup	X	X	X	X	X	X		7.3, ~~7.6,~~ Refer to Chapter 9
r.	GDC 34	Residual Heat Removal	X	X	X	X	X	X		7.3, 7.4, 7.6, Refer to Chapter 5
s.	GDC 35	Emergency Core Cooling	X	X	X	X	X	X		7.3, 7.4, 7.6, Refer to Chapter 6
t.	GDC 38	Containment Heat Removal	X	X	X	X	X	X		7.3, 7.4, 7.6, Refer to Chapter 6
u.	GDC 41	Containment Atmosphere Cleanup	X	X	X	X	X	X		7.3, 7.6, Refer to Chapter 6
v.	GDC 44	Cooling Water	X	X	X	X	X	X		7.3, 7.6, Refer to Chapter 9
		3. Staff Requirements Memoranda								
a.	SRM to SECY 93087 II.Q	Defense Against Common-Mode Failures in Digital I&C Systems	X	X	X	X	X	X	X	7.8
b.	SRM to SECY 93087 II.T	Control Room Annunciator (Alarm) Reliability						X		7.5, 7.9
		4. RGs								
a.	RG 1.22	Periodic Testing of Protection System Actuation Functions	X	X	X	X	X			7.2 to 7.6, 7.9
b.	RG 1.47	Bypassed and Inoperable Status Indication for Nuclear Power Plant Safety System	X	X	X	X	X	X		7.2, 7.3, 7.5, 7.6, 7.9
c.	RG 1.53	Application of the Single-Failure Criterion to Safety Systems	X	X	X	X	X			7.2 to 7.6, 7.9
d.	RG 1.62	Manual Initiation of Protection Actions	X	X	X	X	X			7.2, 7.3
e.	RG 1.75	Independence of Electrical Safety Systems	X	X	X	X	X	X	X	7.2 to 7.9

Table 7.2-3 Reactor Trip Variables, Ranges, Accuracies, Response Times, and Setpoints (Nominal) (Sheet 2 of 2)

RT Function	Variables to be monitored	Range of Variables	Instrument Accuracy*[1,2]	Response Time*[1,2]	Setpoint *[3]
Over Power ΔT	(a) ΔT	0 to 150%	Total 5.2% RTP	Total 6.0 sec	110.6*[5] % RTP
	(b) Reactor Coolant Cold Leg Temperature (T_{cold})	510 to 630°F			
	(c) Reactor Coolant Hot Leg Temperature (T_{hot})	530 to 650°F			
	(d) Neutron Flux (difference between top and bottom power range neutron flux detectors)	-60 to +60% (ΔI)			
Low Reactor Coolant Flow	Reacter Coolant Flow	0 to 120% of rated flow	3% of rated flow	1.8 sec	90% of rated flow
Low RCP Speed	RCP Speed	0 to 120% of rated pump speed	0.5% of rated pump speed	0.6 sec	95.5% rated pump speed
Low Pressurizer Pressure	Pressurizer Pressure	1700 to 2500 psig	2.5% of span	1.8 sec	1865 psig
High Pressurizer Pressure	Pressurizer Pressure	1700 to 2500 psig	2.5% of span	1.8 sec	2385 psig
High Pressurizer Water Level	Pressurizer Water Level	0 to 100% of span	3% of span	1.8 sec	92% of span
Low SG Water Level	SG Water Level	0 to 100% of span (narrow range taps)	3% of span	1.8 sec	13% of span
High-High SG Water Level	SG Water Level	0 to 100% of span (narrow range taps)	3% of span	1.8 sec	70% of span
Manual Reactor Trip Actuation	Switch Position	N/A	N/A	N/A	N/A
ECCS Actuation	Pressurizer Pressure	1700 to 2500 psig	2.5% of span	3.3 sec	1765 psig
	Main Steam Line Pressure	0 to 1400 psig	3% of span	3.3 sec	525 psig
	Containment Pressure	-7 to 80 psig	2.8% of span	3.3 sec	6.8 psig
Turbine Trip	Turbine Emergency Trip Oil Pressure	0 to 3500psig	2% of span	1.0 sec	1000 psig
	Main Turbine Stop Valve Position	N/A	N/A	1.0 sec	5% open

Note:
1. Instrument accuracy and response time calculation methodology refer to Subsection 7.2.2.7.
2. Instrument accuracies and response times will be decided to take into account the specification of instruments.

7.6 Interlock Systems Important to Safety

This section describes interlock systems important to safety. These interlocks are provided to:

- Prevent accident conditions.
- Ensure availability of safety functions.

7.6.1 System Description

The PSMS provides the interlock systems important to safety for the plant, with the exception of electro-mechanical interlocks within the electrical distribution system.

Except as noted for specific interlocks described below:

~~There is no manual bypass capability for interlocks important to safety.~~

Interlocks are tested using the input test, self-test and output test methods as described in Subsections 7.1.3.10 and 7.1.3.11.

Bypassed and inoperable~~Abnormal~~ status of all interlocks is provided via BISI. BISI is discussed in Section 7.5.

The following sections describe all interlock functions.

7.6.1.1 CS/RHR Pump Hot Leg Isolation Valve Open Permissive Interlock

During RHRS operation, the CS/RHR pump takes suction from the RCS hot legs, routes the reactor coolant through the CS/RHR heat exchangers, and returns the reactor coolant back to the reactor via RCS cold legs.~~ The RHR system is able to withstand normal operating RCS pressure without rupture when both CS/RHR Pump Hot Leg Isolation Valves are inadvertently open, as explained in Subsection 5.4.7.~~ In general, ~~C~~compared to the RCS, RHRS is a low-pressure system. An inadvertent connection between the RCS and RHRS while rector coolant pressure is greater than RHR design pressure could lead to over pressurization of the RHRS. Over-pressurization could damage and disable the RHRS, and could lead to inter-system loss of reactor coolant.~~ In US-APWR, t~~The RHR system is designed with sufficient wall thickness to withstand normal operating RCS pressure without rupture when both CS/RHR Pump Hot Leg Isolation Valves are inadvertently opened, as ~~explained~~ described in Subsection 5.4.7.1.

The US-APWR RHRS is placed in operation only when the pressure and temperature of the RCS are approximately at or below 400 psig and 350°F, respectively. To preclude over pressurization of the RHRS, a reactor coolant pressure interlock is provided for the MOVs that interconnect the RHRS to the RCS. Unless the reactor coolant pressure is less than the setpoint for RHR operation, these MOVs cannot be opened. If the MOVs open for RHR operation, and the reactor coolant pressure increases above the setpoint, an alarm is initiated. This interlock for CS/RHR pump hot leg isolation valves are shown in Figure 7.6-1. These valves are typically open at low-pressure conditions (i.e., during

cold shutdown) while below the allowable pressure setpoint. During startup, the valves are manually locked closed (power is removed) to prevent these valves from opening and exposing the RHRS to an over-pressure condition. The valves will not be placed on service again until the subsequent plant cooldown.

The piping connecting the RCS hot leg to RHR pump suction is provided with two MOVs connected in series for each RHR train (8 valves total):

- For RHR train A, the valves are assigned to train A.
- For RHR train B, the valves are assigned to train B.
- For RHR train C, the valves are assigned to train C.
- For RHR train D, the valves are assigned to train D.

Redundant of two valves in series, ensures that over pressurization will not occur even in presence of a single failure.

The signal path for this interlock is from the reactor coolant pressure transmitters to the RPS, and then to the SLS, which controls the MOVs via motor control centers.

CS/RHR pump hot leg isolation valves open permissive interlock does not have independence~~y~~ and diversity in each train, because the current design of RHR system has sufficiently high reliability against overpressurization or possible radioactive release. Moreover the valves cannot be opened inadvertently because power is normally removed as described above.

7.6.1.2 CS/RHR Valve Open Block Interlock

Common CS/RHR pumps are shared between the CSS and RHRS. The CSS and RHRS will not be required at the same time. CSS will be required in the beginning of an AOO or PA to reduce the containment pressure, while the RHR will be employed in the later part of the event to remove decay heat.

- Simultaneous-open block interlock with RHR discharge line containment isolation valve and CS header containment isolation valve;

  Valves are provided for CS/RHR pump discharge for each CS and RHR line. If CS and RHR lines are opened simultaneously, the CS/RHR pump will be loaded beyond its capacity. This could lead to a pump run-out condition, which would damage the CS/RHR pumps. To preclude opening both systems valves simultaneously an interlock is provided to block simultaneous opening of the RHR discharge line containment isolation valve and the CS header containment isolation valve. The interlock functions to prevent opening a valve that is closed. This interlock prevents CS and RHR system from operating simultaneously to prevent a pump run-out situation. The interlocks for these valves are shown in Figures 7.6-2 and 7.6-3. For RHS-MOV-021A, B, C, D, the piping diagrams for

For NCS-MOV-~~020~~007A, B~~, C, D~~ and NCS-MOV-020A, B the piping diagrams for these valves are shown in Figure 9.2.2-1 (Sheet 1 of 9~~7~~) in Chapter 9, and for NCS-MOV-~~007A~~007C, ~~B~~D~~, C, D~~ and NCS-MOV-020C, D in Figure 9.2.2-1 (Sheet 2 of 9~~7~~) of Chapter 9.

The interlocks for these valves are shown in Figure 7.6-6. These interlocks ensure the independence of each safety mechanical train of the CCWS thereby providing CCW coolant to ESF systems required for mitigating conditions of the event.

These interlocks may be manually bypassed for reopening the valves to restore RCP seal and spent fuel pit heat exchanger cooling, if required.

Two series valves assigned to different trains ensures isolation even in the presence of a single failure.

The signal path for the ECCS and CS interlocks is from the ESFAS to the SLS that controls the isolation valves through motor control centers. The signal path for the surge tank interlock is from local level transmitters to the RPS to the SLS for control of these same valves.

7.6.1.6 RCP Thermal Barrier HX CCW Return Line Isolation Interlock

Each CCW subsystem supplies cooling water to the RCP thermal barrier heat exchanger. Two motor-operated valves and flow meters are located at the CCW outlet line of the RCP thermal barrier heat exchanger.

These valves close automatically upon a high flow rate signal at the outlet of this line in the event of in-leakage from the RCS through the thermal barrier heat exchanger, and prevent this in-leakage from further contaminating the CCWS.

The interlocks for these valves are shown in Figure 7.6-7.

These interlocks ensure isolation of in-leakage from the RCS through the thermal barrier heat exchanger.

The signal path for these interlocks is from the local flow transmitters to the RPS, and then SLS, which controls these MOVs via motor control centers.

7.6.1.7 Low-pressure ~~l~~Letdown ~~l~~Line ~~i~~Isolation ~~v~~Valve

A single normally closed air-operated valve is placed in each of the two low pressure letdown lines connected to two of the four RHR trains. During the normal plant cool down operation, one of these valves is open to divert a portion of the RCS flow to the CVCS for the purpose of purification and RCS inventory control.

Additionally at mid-loop operation during plant shutdown, these valves are automatically closed and the CVCS is isolated from the RHRS after receiving the RCS loop low-level signal to prevent loss of RCS inventory.

The interlocks for these valves are shown in Figure 7.6-8. For RHS-AOV-024B and 024C the piping diagrams for these valves are shown in Figure 5.4.7-2 in Chapter 5.

7.6.2 Design Basis Information

The interlock systems important to safety comply with the following codes and standards:

1. 10 CFR 50.55a(a)(1), "Quality Standards."

2. 10 CFR 50.55a(h), "Protection and Safety Systems,"

3. 10 CFR Part 50, Appendix A, General Design Criterion (GDC) 1, "Quality Standards and Records."

4. GDC 2, "Design Bases for Protection Against Natural Phenomena."

5. GDC 4, "Environmental and Dynamic Effects Design Bases."

6. GDC 10 "Reactor Design"

7~~6~~. GDC 13, "Instrumentation and Control."

8. GDC 15 "Reactor Coolant System Design"

9. GDC 16 "Containment Design"

10~~7~~. GDC 19, "Control Room."

11. GDC 20 "Protection System Functions"

12. GDC 21 "Protection Systems Reliability and Testability"

13. GDC 22 "Protection System Independence"

14. GDC 23 "Protection System Failure Modes"

15~~8~~. GDC 24, "Separation of Protection and Control Systems."

16. GDC 25 "Protection System Requirements for Reactivity Control Malfunctions"

17. GDC 28 "Reactivity Limits"

18. GDC 29 "Protection Against AOOs"

19. GDC 34 "Residual Heat Removal"

20. GDC 35 "Emergency Core Cooling"

21. GDC 38 "Containment Heat Removal"

22. GDC 41 "Containment Atmosphere Cleanup"

23. GDC 44 "Cooling Water"

24~~9~~. 10 CFR 50.34(f)(2)(v), "Additional TMI-Related Requirements, Bypass and Inoperable Status Indication"

7.6.2.1 Single Failure Criterion

Compliance with the single failure criterion is discussed for each interlock in the sections above.

7.6.2.2 Quality of Components and Modules

All interlocks important to safety are implemented using Class 1E components with a corresponding quality program.

7.6.2.3 Independence

Redundancy and independent train assignments are specifically discussed for each interlock in the sections above.

7.6.2.4 System Testing and Inoperable Surveillance

System testing and inoperable surveillance for all interlocks is described in Subsection 7.6.1.

7.6.2.5 Use of Digital Systems

All interlocks important to safety are implemented in the PSMS, which is a digital system. This includes sensor monitoring and bistable functions, and interlock logic. The final SLS output (i.e., open or close), which interfaces to the controlled plant component, reflects the result of combining all manual, automatic and interlock control signals.

7.6.3 Analysis

Detailed compliance to the GDC, IEEE Std 603-1991 (Reference 7.6-2) and IEEE Std 7-4.3.2-2003 (Reference 7.6-3) are described in ~~Topical Report~~ MUAP-07004 (Reference 7.6-4) Section 3.0, Appendix A and B.

All the interlocks important to safety provide protection for plant mechanical systems or protection to prevent plant accident conditions. All the interlocks are implemented by the PSMS.

According to RG 1.206 (Reference 7.6-5) the following categories of interlocks are described:

- Interlocks to prevent overpressurization of low-pressure systems:

- This is the RCS/RHR interlock discussed in Subsection 7.6.1.1.

- Interlocks to prevent overpressurization of the primary coolant system during low-temperature operations of the RV:
  - There are no interlocks necessary to prevent overpressurization of the RCS during low-temperature operations of the RV. Refer to Subsection 5.2.2.
- Interlocks for ECCS Accumulator Valves:
  - The ECCS accumulator valve Interlock is discussed in Subsection 7.6.1.4.
- Interlocks required to isolate safety systems from non-safety systems:
  - This is the CCW Interlock discussed in Subsection 7.6.1.5.
- Interlocks required to preclude inadvertent inter-ties between redundant or diverse safety systems:
  - There are no interlocks required to preclude inadvertent inter-ties in the US-APWR~~.~~ except in the CCWS, since safety systems, such as Safety Injection System, Residual Heat Removal System, Containment Spray System, and Essential Service Water System, are mechanically separated in each train.
  - Redundant I&C trains are protected from inadvertent inter-ties, such as those cause by electrical faults, by qualified isolation devices described in Subsection 7.1.3.5.
  - Inadvertent inter-ties between safety systems and the DAS are discussed in Section 7.8.
  - Redundant mechanical trains (i.e., redundant CCW trains) are protected as discussed in Subsection 7.6.1.5.

7.6.4 Combined License Information

No additional information is required to be provided by a COL applicant in connection with this section.

7.6.5 References

7.6-1 HSI System Description and HFE Process, MUAP-07007-P Rev.3 (Proprietary) and MUAP-07007-NP Rev.3 (Non-Proprietary), October 2009.

7.6-2 IEEE Standard Criteria for Safety Systems for Nuclear Power Generating Stations, IEEE Std 603-1991.

7.6-3 IEEE Standard Design for Digital Computers in Safety Systems of Nuclear Power Generating Stations, IEEE Std 7-4.3.2-2003.

Chapter 9

Page	Location (e.g., subsection with paragraph/ sentence/ item, table with row/column, or figure)	Description of Change
9.2-2	Section 9.2.1.1.1	RAI-585-4464 Question 09.02.01-33 11th bullet has been revised to the following: "The ESWS is designed to isolate nonsafety-related portions from the safety-related portions of the system."
9.2-2	Section 9.2.1.1.1	RAI-585-4464 Question 09.02.01-33 A 13th bullet is added to explain that the ESWS is composed of 4 separate redundant trains that are not connected and a failure in one train will not affect another.
9.2-2	Section 9.2.1.1.2	RAI-585-4464 Question 09.02.01-33; 09.02.01-42 Entire section and section title changed to reflect and explain Power Generation Design Bases for the ESWS.
9.2-2	Section 9.2.1.1.3	RAI-585-4464 Question 09.02.01-33 Section added as "Nonsafety-Related Design Bases" and information from previous revision's 9.2.1.1.2 has been used and revised
9.2-3	Section 9.2.1.2.1	RAI-585-4464 Question 09.02.01-58 First paragraph revised to clarify how the ESWS will not contain nor transport radioactive materials from its source to its recipient components.
9.2-3	Section 9.2.1.2.1	RAI-585-4464 Question 09.02.01-58 Deleted the following from the 2nd paragraph: "one 100% strainer upstream of the CCW HX".
9.2-3	Section 9.2.1.2.1	RAI-585-4464 Question 09.02.01-33; 09.02.01-34; 09.02.01-52 Added in 2nd text clarifying that a single component failure and maintenance in two of the four independent trains of the ESWS will not affect performance.
9.2-4	Section 9.2.1.2.1	RAI-585-4464 Question 09.02.01-35; 09.02.01-55 The 3rd paragraph is revised by adding text that clarifies the ESWS flow, operating temperatures, and prevention of ESW standby train freezing.
9.2-4	Section 9.2.1.2.1	RAI-585-4464 Question 09.02.01-36 5th paragraph is revised to clarify that the COL applicant shall maintain ESWS/UHS pressure above saturation pressuring for all operating modes.
9.2-4	Section 9.2.1.2.1	RAI-585-4464 Question 09.02.01-36 6th paragraph is revised to clarify counter-measures against water hammer on ESWS pump re-start.
9.2-5	Section 9.2.1.2.1	RAI-585-4464 Question 09.02.01-43 Deleted the 7th paragraph to be consistent with UHS elevation for prevention of water hammer.
9.2-5	Section 9.2.1.2.1	RAI-585-4464 Question 09.02.01-49 8th para. revised to remove "analyze inadvertent water hammer events" since it is included as one of dynamic loads in piping analysis to be performed in ITAAC.
9.2-5	Section 9.2.1.2.1	RAI-585-4464 Question 09.02.01-58 9th paragraph is revised to clarify that CCW plate Hx prevents leakage and contamination into either CCW or ESW side

US-APWR DCD Chapter 9 Rev. 2, Tracking Report Rev. 5 Change List

Page	Location (e.g., subsection with paragraph/ sentence/ item, table with row/column, or figure)	Description of Change
9.2-5	Section 9.2.1.2.1	RAI-585-4464 Question 09.02.01-43 9th paragraph revised to clarify COL applicant requirements for UHS and ESWS.
9.2-5	Section 9.2.1.2.1	RAI-585-4464 Question 09.02.01-33 11th paragraph added to provide CDI on blowdown system and references section 9.2.5.
9.2-6	Section 9.2.1.2.1	RAI-585-4464 Question 09.02.01-36 12th paragraph has been revised to: "The COL Applicant is to verify system layout of the ESWS and UHS and is to develop operating procedures to assure that the ESWS and HUS are above saturation conditions for all operating modes."
9.2-6	Section 9.2.1.2.1	RAI-585-4464 Question 09.02.01-33 The last paragraph of this section is relocated to section 9.2.5 since it does not pertain to ESWS.
9.2-6	Section 9.2.1.2.2.1	RAI-585-4464 Question 09.02.01-46 In the 1st paragraph, required ESWP flow and margin is clarified to show that it allows for pump and heat transfer degradation.
9.2-6	Section 9.2.1.2.2.1	RAI-585-4464 Question 09.02.01-37 The following is added in the 3rd paragraph to clarify COL applicant responsibility: "The required pressure drop across the ESWS components and piping (within standard plant design scope) is approximately 100 feet. The COL applicant is to determine the required ESWP TDH by adding pressure drop across the site specific components and piping and maximum static lift to the pressure drop.
9.2-6	Section 9.2.1.2.2.1	RAI-585-4464 Question 09.02.01-39 In the 3rd paragraph, the following is added to clarify COL applicant responsibility: "The COL Applicant is to assure that the sum of the shut-off head of the selected ESW pumps and static head will not result in system pressure exceeding the ESWS design pressure."
9.2-6	Section 9.2.1.2.2.1	RAI-585-4464 Question 09.02.01-38 In the 3rd paragraph, text added to clarify UHS level basis, vortex formation evaluation and NPSH computation and COL applicant responsibility for vortex formation evaluation.
9.2-7	Section 9.2.1.2.2.2	RAI-585-4464 Question 09.02.01-34; 09.02.01-52 The entire section has been revised to reflect the changes in the type and number of strainers used for each train ESWP discharge line.

Page	Location (e.g., subsection with paragraph/ sentence/ item, table with row/column, or figure)	Description of Change
9.2-8	Section 9.2.1.2.2.3	RAI-585-4464 Question 09.02.01-33 2nd paragraph is added to justify backflushing line: "A backflushing line is provided for each CCW HX to enable backflusing of the heat exchanger following a high differential pressure alarm that may likely be caused by accumulation of debris materials inside the heat exchanger plate flow channels."
9.2-8	Section 9.2.1.2.2.5	RAI-585-4464 Question 09.02.01-33; 09.02.01-34 Entire section revised to address applicable design specifications and potential failure modes and what basis the buried piping and pipe tunnel information applies to the COL applicant.
9.2-9	Section 9.2.1.2.2.6	RAI-585-4464 Question 09.02.01-55 Section is revised and the following is added to the 3rd paragraph to clarify valves: "The valves are sized such that they are near the full open position during the various modes of plant operation. Valve opening margins are included to ensure that the design flow is met during all plant operating modes. Restriction orifices are provided downstream of the heat exchangers as required for flow balancing."
9.2-10	Section 9.2.1.2.3.1	RAI-585-4464 Question 09.02.01-33 1st and 2nd paragraphs are revised to include a description of ESWS operation for satisfying shutdown cooling considerations.
9.2-10	Section 9.2.1.2.3.1	RAI-585-4464 Question 09.02.01-40 3rd through 5th paragraphs are revised to clarify that the alternate or backup operations of the ESWPs do not involve manual actuions.
9.2-11	Section 9.2.1.2.3.1	RAI-585-4464 Question 09.02.01-36 6th paragraph is revised to clarify voiding.
9.2-11	Section 9.2.1.2.3.1	RAI-585-4464 Question 09.02.01-49 The following is added to clarify COL applicant responsibility: "The COL applicant is to provide a void detection system with alarms to detect system voiding."
9.2-11	Section 9.2.1.2.3.1	RAI-585-4464 Question 09.02.01-36 7th paragraph is revised and supplemented with information pertaining to justification in terms of valve leak rate criterion and provide recognition of this in the IST program.
9.2-12	Section 9.2.1.2.3.1	RAI-585-4464 Question 09.02.01-42 In the final paragraph, "ditto train" is removed and replaced with "leaking train" due to uncertain terminology.
9.2-12	Section 9.2.1.3	RAI-585-4464 Question 09.02.01-33 1st paragraph is removed due to being misplaced.
9.2-13	Section 9.2.1.3	RAI-585-4464 Question 09.02.01-44 5th paragraph is revised to clarify use of alarm for leaking train in ESWS or CCWS.

US-APWR DCD Chapter 9 Rev. 2, Tracking Report Rev. 5 Change List

Page	Location (e.g., subsection with paragraph/ sentence/ item, table with row/column, or figure)	Description of Change
9.2-14	Section 9.2.1.3	RAI-585-4464 Question 09.02.01-35 The following is added at the beginning of 13th paragraph: "The ESWS is designed for operation at low water temperature of 32°F during all modes of plant operation."
9.2-14	Section 9.2.1.3	RAI-585-4464 Question 09.02.01-33 13th paragraph is revised to clarify COL applicant to provide protection of site-specific portions of ESWS.
9.2-14	Section 9.2.1.3	RAI-585-4464 Question 09.02.01-33 14th paragraph is revised to specify the design features and site specific conditions of ESWS.
9.2-14	Section 9.2.1.3	RAI-585-4464 Question 09.02.01-33 Paragraph added after 14th paragraph to clarify nonsafety-related portions of the system, their valves' position and effects for a postulated failure.
9.2-14	Section 9.2.1.3	RAI-585-4464 Question 09.02.01-34 Final paragraph of the sub-section is revised to include COL applicant interface.
9.2-15	Section 9.2.1.4	RAI-585-4464 Question 09.02.01-46 3rd and 4th paragraphs are revised to clarify acceptance criteria for pump degradation and heat exchangers.
9.2-15	Section 9.2.1.4	RAI-585-4464 Question 09.02.01-51 Final paragraph added to specify COL applicant requirements for periodic inspection, monitoring, maintenance, performance testing and verification of ESWS components.
9.2-15	Section 9.2.1.5.2	RAI-585-4464 Question 09.02.01-41 The following is added at the end of the sub-section to specify line pressure: "The ESW header line pressure is categorized as a PAM variable to assist the MCR personnel in evaluating the safety status of the Plant." "The ESW header line pressure signal is also used for backup activation of the alternate ESWS train as discusses in Subsection 9.2.1.2.3.1."
9.2-16	Section 9.2.1.5.5	RAI-585-4464 Question 09.02.01-41 The following is revised at the end of the sub-section to specify differential pressure signals: "The differential pressure signals activate the start and stop functions of the ESWP discharge strainers."
9.2-37	Section 9.2.5.2.2	RAI-585-4464 Question 09.02.01-33 1st paragraph is revised to clarify blowdown water.
9.2-60	Section 9.2.10	RAI-585-4464 Question 09.02.01-33; 09.02.01-55 COL 9.2(2) revised to reflect COL applicant responsibility to ESWS.
9.2-60	Section 9.2.10	RAI-585-4464 Question 09.02.01-38; 09.02.01-39 COL 9.2(6) is revised to reflect COL applicant responsibility to ESWP.

Page	Location (e.g., subsection with paragraph/ sentence/ item, table with row/column, or figure)	Description of Change
9.2-61	Section 9.2.10	RAI-585-4464 Question 09.02.01-33 COL 9.2(7) is revised to reflect COL applicant responsibility to piping of ESWS.
9.2-62	Section 9.2.10	RAI-585-4464 Question 09.02.01-49 COL 9.2(25) is revised to reflect COL applicant responsibility to water hammer.
9.2-62	Section 9.2.10	RAI-585-4464 Question 09.02.01-34 COL 9.2(26) is revised to ensure that no plugging in narrow piping anywhere within the ESWS occurs.
9.2-63	Section 9.2.10	RAI-585-4464 Question 09.02.01-33 COL 9.2(28) is added since statement from section 9.2.1.2.1 that indicates that COL applicant is to provide piping, valves, etc to site specific UHS was relocated.
9.2-63	Section 9.2.10	RAI-585-4464 Question 09.02.01-33 COL 9.2(29) is added since section 9.2.1.3 has been changed for COL applicant safety evaluation.
9.2-63	Section 9.2.10	RAI-585-4464 Question 09.02.01-51; 09.02.01-57; 09.02.01-59 COL 9.2(30) is added since a new COL applicant requirement for periodic inspection, monitoring, maintenance, performance testing and verification of ESWS components has been added.
9.2-63	Section 9.2.10	RAI-585-4464 Question 09.02.01-36 COL 9.2(31) is added to establish the COL applicant requirement for maintaining discharge portions of ESWS and UHS above saturation pressure.
9.2-63	Section 9.2.10	RAI-585-4464 Question 09.02.01-49 COL 9.2(32) is added to ensure that system is kept filled by providing a void detection system.
9.2-63	Section 9.2.10	RAI-585-4464 Question 09.02.01-34 COL 9.2(33) is added to have COL applicant provide design details of strainer backwash line, vent line and their discharge locations.
9.2-65	Table 9.2.1-1	RAI-585-4464 Question 09.02.01-34 Table is revised to add the power supply classification of the active ESWS components.
9.2-65	Table 9.2.1-1	RAI-585-4464 Question 09.02.01-34; 09.02.01-52 Table is revised to add maximum allowed differential pressure and strainer mesh size.
9.2-68	Table 9.2.1-2	RAI-585-4464 Question 09.02.01-34 Table is revised to tabulate strainer failure modes in ESWS.
9.2-71	Table 9.2.1-3	RAI-585-4464 Question 09.02.01-33; 09.02.01-45 Table revised with ESW pump motor being deleted from the table.
9.2-72	Table 9.2.1-4	RAI-585-4464 Question 09.02.01-33; 09.02.01-45 Table revised with ESW pump motor being deleted from the table.

US-APWR DCD Chapter 9 Rev. 2, Tracking Report Rev. 5 Change List

Page	Location (e.g., subsection with paragraph/ sentence/ item, table with row/column, or figure)	Description of Change
9.2-93	Table 9.2.7-1	RAI-585-4464 Question 09.02.01-33 Table revised cooling water inlet temperature for consistency of maximum allowed supply temperature for ESWS.
9.2-98	Figure 9.2.1-1	RAI-585-4464 Question 09.02.01-32 Figure has been revised to include CDI.
9.3-62	Table 9.3.2-6	RAI-585-4464 Question 09.02.01-58 Table is revised to include sample point for radioactivity in the CCW Hx.

- Protection against natural phenomena for the safety-related portions are provided such as protection from wind and tornado effects, as described in Section 3.3; flood protection as described in Section 3.4; internal missile protection as described in Section 3.5; protection against dynamic effects associated with the postulated rupture of piping as described in Section 3.6. Environmental qualification of Class 1E equipment is described in Section 3.11; seismic design is described in Section 3.7, and fire protection is described in Section 9.5.

- The ESWS is constructed in accordance with ASME Section III, Class 3 requirements.

- The ESWS is designed to permit periodic inservice testing and inspection of components to assure system integrity and capability in accordance with GDC 45 and ASME Code Section XI.

- The ESWS is designed to permit appropriate pressure and functional testing to assure the structural and leaktight integrity of components, operability and the performance of the active components of the system, and system operability during reactor shutdown, loss-of-coolant accidents, including operation of applicable portions of the protection system and the transfer between normal and emergency power sources per GDC 46.

- The ESWS is designed with the capability to isolate non–safety-related portions from the safety-related prtions of the system.

- The essential service water pumps (ESWPs) are designed to have sufficient available net positive suction head (NPSH) to assure that they can perform their safety function at the lowest probable water level of the UHS.

- The ESWS is composed of four redundant trains completely separated from each other, and whose components and piping are not shared with the other trains and other plant units. There are no interconnections among the trains so that the failure of one train will not affect another per GDC 5.

9.2.1.1.2 Power Generation Design Bases

The ESWS removes the heat loads from the CCWS through heat exchange with the CCWS heat exchangers and essential chiller units during normal plant operation, refueling, and normal shutdown.

9.2.1.1.3 Nonsafety-Related Design Bases

The ESWS does not provide cooling water to any nonsafety-related components during normal plant operations or design basis LOCA conditions. The ESWS may be used as a backup source of water to the fire protection water supply system (FSS) in the event the normal supply is unavailable due to earthquake. The ESWS is normally isolated from the FSS. The ESWS is not required to supply water to the FSS during any design basis event other than the safe shutdown earthquake. ~~. However, some portions of the system are~~

~~nonsafety-related, e. g., sections of pipe in heat exchanger drain piping after the isolation valves. These boundary isolation valves which provide separation between the safety-related and nonsafety-related portions are normally closed. During a design basis event, postulated simultaneous failure of all nonsafety-related piping would not impact operation of any ESW train and would not affect ESWS capability to perform its safety functions. The COL Applicant is to address site specific nonsafety-related system isolation (intake basin blow down system, intake basin make up water system) as applicable.~~

9.2.1.2 System Description

9.2.1.2.1 General Description

Figure 9.2.1-1 shows the piping and instrumentation diagram of the ESWS. The ESWS draws water from the intake basin and returns the effluent water to the UHS after passing through the CCW HXs and the essential chiller units. The UHS, which is usually a freshwater (or saltwater) source, is the source of water to the intake basin. It follows that the ESWS cooling water does not contain radioactive materials nor release radioactive contaminants to the environment. The essential chiller units also do not include ~~the~~any radioactive fluid. ~~, and~~The CCWS is the intermediate loop between the reactor auxiliaries and the ESWS. This arrangement minimizes direct leakage of ~~the~~ radioactive fluid from the ESWS to the environment. Nevertheless, the CCW plate heat exchangers are constructed to prevent intermixing of the fluids from both sides so that any leakage will go to the outside of the heat exchanger except when a hole is developed in the plates—a rare event with titanium plates. Gasket failure directs leakage towards the outside of the CCW heat exchanger, hence radioactive contamination of the ESWS propagating to the UHS and ultimately to the environment is not considered credible. Any leakage from the CCW heat exchangers is collected into the nonradioactive floor drains thus ensuring that no ESWS water is released directly to the environment. For conservatism, however,~~In addition,~~ radiation monitors are provided in each discharge line of the CCW HX essential service water (ESW) side. See also the description of these monitors in DCD Subsection 11.5.2.2.2. Radiation alarms are provided to ~~The monitors~~ alert the operator if radioactive ~~the~~ leak~~ing~~age from the CCW side has entered the ESW side. ~~contains radioactivity so that t~~The operator ~~can~~then isolates the leaking train to prevent uncontrolled radiation contamination of the ESWS and UHS. Prior to any radiation leakage being detected in the ESWS, however, radiation alarms in the CCWS side would have already alerted the operators of contamination in the CCWS. The affected CCWS train is immediately isolated followed by the isolation of the aligned ESWS to prevent possible contamination of the UHS and the environment. A local grab sampling line is installed downstream of the CCW heat exchanger to determine any trace amounts of radioactivity prior to release to the UHS. ESW discharge sampling is performed periodically. For discharge to cooling towers, the ESW is sampled prior to blowdown releases.~~.~~

The ESWS is arranged into four independent trains (A, B, C, and D). Each train consists of one ESWP, two 100% strainers in the pump discharge line, ~~one 100% strainer upstream of the CCW HX,~~ one CCW HX, one essential chiller unit, and associated piping, valves, instrumentation and controls. This arrangement assures that failures and postulated events in one train do not affect the safety-related functions of the other trains.

During normal ESWS operation, at least two trains out of four are required to be operable to meet the safety-related design requirements. During accidents and other design basis events, such as a LOCA or safe shutdown with a LOOP, a postulated single active component failure in one train coincident with on-line maintenance in another train do not prevent the ESWS from performing its safety-related functions with the two remaining operable trains. Instrumentation is also provided independently and not shared among the trains.

Each supply line after the strainer is tapped to supply cooling water to each component. Each CCW HX is provided with piping and isolation valves around the heat exchanger~~,~~ which facilitates back flushing of the CCW HX of the ESW side when required. Heat from the reactor auxiliaries is removed from the CCW HX and the heated service water flows to the UHS via independent lines. The ESW flow of 13,000 gpm is maintained at all operating conditions, including accident conditions and safe shutdown with a LOOP. The ESWS is designed to operate at temperatures as low as 32° F. For the ESWS piping and components in the R/B and PS/B, freezing of the ESW in the standby trains is precluded by the HVAC system operating between 50° F and 105° F. Piping running through tunnels and trenches are below grade so that freezing of the ESW is not a concern. Stagnant and exposed portions of the system are heat traced to ensure that the ESW inside these structures is maintained above 32° F.

The ESW piping from the pump discharge after passing through the discharge strainers drops underground and runs to the reactor building. The ESW tunnels near the building are located at -26' 4'' elevation. After serving the CCW HXs and the essential chiller units ESW piping runs to the UHS.

The COL applicant is to determine the piping layout of the UHS to maintain the ESWS/UHS pressure above saturation pressure for all operating modes. The piping layout of the UHS maintains the ESWS/UHS system pressure downstream of the pump discharge check valve above their saturation pressure at 140° F design temperature by ensuring that no piping high points are above the cooling tower spray header. This prevents potential void formation during pump stoppage. During pump operation, due to the addition of the dynamic head to the static head, the ESWS/UHS system pressure will be above saturation pressure.~~The ESWPs are sized to provide positive pressure at the highest point in the system. The system is designed for 140° F.~~ The system layout and the design assure that the fluid pressure remains above saturation conditions at all locations during all modes of operation.

~~The ESWS layout ensures that the fluid pressure in the system is above saturation conditions at all locations.~~ The ESWS layout, in combination with the motor-operated valves (MOVs) at the discharge of each ESWP, minimizes the potential for transient water hammer. The starting logic of the ESWP interlocks the operation of the motor operated valve with the pump operation. ~~The v~~Voiding in any train due to potential ESW drain down through the cooling tower spray nozzles may occur ~~on~~ during loss of offsite power and subsequent pump trip. To preclude water hammer on pump re-start, the MOV at each pump discharge is interlocked to close when the pump is not running or is tripped. This interlock prevents the pump from starting if the valve is not closed except during emergency situations such as an accident or LOOP events. Upon receiving the pump

actuation signal such as an ECCS actuation or LOOP sequence signal~~. After a predetermined time delay after the pump starts~~, the MOV starts to gradually open to preclude water hammer. The ESWP and ESWP discharge MOV interlock is overridden by either the ECCS actuation or LOOP sequence signal. If the valve fails to open, the train may be placed out of service since the loss of one train will not affect any plant safety functions as shown Table 9.2.1.2. ~~the pump is tripped~~ an~~d~~ alarm~~ed~~ is sent to ~~in~~ the MCR. The short time duration during which the pump is dead headed is not detrimental for ~~long term~~ pump performance and the pump can be manually tripped.

~~The CCWHXs and the essential chiller units are located at floor elevation (- 26' 4'') in the reactor building. The ESWPs and ultimate heat sink which is site dependent will be located at grade elevation. This arrangement assures that all points in the system remain above atmospheric pressure.~~

The COL Applicant is to develop ~~procedures for~~ system filling, ~~and~~ venting, keeping the system full, and operational procedures to minimize the potential for water hammer;, to analyze the system for ~~inadvertent~~ water hammer ~~events~~impact~~,~~; to design the piping system to withstand the potential water hammer forces~~,~~; and to analyze inadvertent water hammer events, in accordance with NUREG-0927~~develop procedures to minimize the impact of these forces~~.

~~The ESWS system design assures that the CCW HX operating pressure on the ESW side is not higher than the CCWS operating pressure.~~ The ~~us,~~construction of the CCW plate heat exchangers prevents any leakage ~~is~~ from either the CCW side or ~~to~~ the ESW side from contaminating each other~~S~~. Therefore, the raw service water do~~s~~es not contaminate the demineralized CCW nor does the potentially ratioactive CCW contaminate the ESW. The ESWS interfaces with the UHS system ~~which is~~are further described in Section 9.2.5. Type and location of the UHS ~~is~~are site specific. The COL Applicant's ~~is to assure that~~ selection and design of the UHS to deliver the design ~~supplies~~ water flow rate to the ESWS does not exceed the ~~at a~~ maximum design temperature of 95° F under all operating conditions to assure sufficient cooling capacity. The UHS design also assures the cooling water inventory for a minimum of 30 days without make~~-~~up to mitigate the consequences of a design basis event. The COL Applicant is to design the ESW intake structure or UHS [basin] such that the minimum water level ~~(~~after a 30~~-~~-day emergency operation~~)~~ will provide adequate NPSH to the ESWPs under accident conditions.

Bio~~-~~fouling and chemistry control of the ESWS ~~is~~are site specific and depend~~s~~ upon the type of UHS. The COL Applicant is to specify the following ESW chemistry requirements.

- A chemical injection system to provide non-corrosive, non-scale forming conditions to limit biological film formation
- The type of biocide, algaecide, pH adjuster, corrosion inhibitor, scale inhibitor and silt dispersant based on the site conditions

As part of the water chemistry management program of a plant that utilizes cooling towers and basins as the ESWS water source, an ESWS blowdown line is installed at the ESWP discharge piping. Part of the pumped ESW is blown down to remove a portion of the

accumulated chemical salts and dissolved solids per site environmental chemistry requirements while the UHS makeup system is in operation. Details are given for blowdown and UHS basin water makeup in Section 9.2.5.

The COL Applicant is ~~to develop operating procedures~~ to verify system layout ~~and performance~~ of the ESWS and UHS and is to develop operating procedures to assure that the ESWS and UHS ~~is~~are above saturation conditions ~~throughout the system~~for all operating modes.

The COL applicant is to develop maintenance and test procedures to monitor debris build-up and flush out debris.

~~The COL Applicant is to provide the piping, valves and other design related to the site specific UHS.~~

9.2.1.2.2 Component Description

Table 9.2.1-1 shows the design parameters of the major components in the system.

9.2.1.2.2.1 ESWPs

Four 50% capacity ESWPs, one per train, supply cooling water to remove heat from the recipient components, and then discharge the heated water to the UHS. Approximately 12,043 gpm ESWP flow is required for all modes of plant operation as indicated in the DCD Table 9.2.1-4. This provides approximately 7.7 percent margin to the design ESWP flow rate of 13,000 gpm. The margin allows for pump and heat transfer degradation by fouling, leakages, excessive pressure drop across system components or, fluctuations due to supplied electrical frequency.

The pumps are powered from the Class 1E ~~normal~~ ac power system. On loss of offsite power, the pumps are automatically powered from their respective emergency power source.

Each pump is designed to provide 13,000 gpm flow at the required total dynamic head. The required pressure drop across the ESWS components and piping (within standard plant design scope) is approximately 100 feet. The COL applicant is to determine the required ESWP TDH by adding pressure drop across the site specific components and piping and maximum static lift to this pressure drop. The COL Applicant is to provide the site specific data for the ESWPs and assure that the selected ESWP will require less NPSH than the minimum available NPSH under all operating conditions. The COL Applicant is to assure that the sum of the shut-off head of the selected ESW pumps and the static head will not result in exceeding the ESWS design pressure. The UHS level is based on the 30-day emergency cooling at design basis accident heat loads, pump(s) operating at design flow rates with maximum cooling water temperature of 95° F. The potential for vortex formation is evaluated and the available NPSH computed using these parameters. The COL Applicant is to evaluate the potential for vortex formation based on the most limiting assumptions that apply (e.g., temperature, flow rate, operation of other pumps for vortex evaluation).

The ~~ESWP motors are water cooled~~ mode of cooling of the ESWP motors is site-specific and shall be determined by the COL Applicant.

9.2.1.2.2.2 Strainers

Two 100% capacity parallel strainers are located in each ESWP discharge line. The strainers are automatic self-cleaning type. The differential pressure across the operating strainer is monitored. When the predetermined high differential set pressure across the strainer is reached an alarm is sent locally and to the MCR.~~; the clogged strainer is isolated by first shutting off the ESWP and them closing the strainer isolation valves. The standby strainer is then placed in service by manually opening the strainer isolation valves. The clogged strainer cartridge will be manually replaced.~~ A high differential pressure alarm initiates backwashing for discharge of the accumulated debris inside the strainer. Backwash operation is started before the maximum allowable differential pressure is reached to prevent strainer clogging. The automatic strainers are not expected to fail due to clogging since backwashing is performed at an alarm setpoint that is much lower than the maximum allowable differential pressure. The operator also may remotely start backwash operation when automatic actuation fails. At abnormal conditions such as during an accident or LOOP, however, the nonsafety-related differential pressure indications and alarms are not credited so that the operator may have to remotely start strainer backwashing. The safety-related flow indication and alarm categorized as PAM variables will aid the operator to identify the need for strainer backwashing. In principle, the backup strainer is installed only for cases when the operating strainer is clogged at an unanticipated degree, although this is rather unlikely. Failure of any active component in the backwash line or the strainer itself, which could lead to failure of the associated train, can be dealt with in one of two ways: i.e. either to shut down that train or operate the standby strainer. Failure of one train does not challenge the performance of the entire ESWS as mentioned previously. See the failure modes effects and analysis in Table 9.2.1-2.

During normal operations, the operator may also periodically swap the strainers to operate the standby or parallel strainer in lieu of the normally operating strainer in the same operating train. No common cause failures are expected due to operator errors at manual swapping of the strainers since the isolation valves are administratively locked on each side of the strainers.

The strainer backwash line is installed with a normally open isolation valve. The COL applicant is to determine the backwash line discharge location in accordance with the type of the UHS used. This normally open isolation valve in the backwash line and the strainer integral backwash control valve are interlocked to close at a pump stop signal to prevent water drainage that could potentially lead to water hammer. The isolation valve is also provided with remote manual control from the MCR to enable remote manual isolation during accidents. The backwash line valves are powered by a Class 1E DC source so that they close upon loss of offsite power. An automatic vent valve is also installed to sweep out air introduced into the piping system by the vacuum breakers installed for prevention of water hammer.

~~These strainers filter out most of the debris and thus provide adequate protection for ESWS components.~~

~~One 100% capacity self-cleaning type strainer is located upstream of each CCW HX. The strainer is continuously blown down at a rate of 500 gpm to prevent buildup of impurities and clogging of the CCW HXs. The blowdown water is discharged downstream of the CCW HXs.~~ The automatic strainers have a 3 mm mesh which is considered to effectively remove debris from the system that could clog the CCW plate heat exchangers with flow passages approximately 3~6 mm in diameter. Since the essential chiller units, being shell and tube type heat exchangers, have a much larger flow path than the CCW heat exchangers, ~~N~~no strainer ~~is provided~~ for ~~essential chller unit coolers since filtration is provided by the ESWP discharge pipe strainers and~~ additional filtering is ~~not~~ deemed necessary. The 3mm mesh of the strainer element also assures that potential clogging of the cooling tower nozzles is avoided.

The ESWP discharge strainers are designed per ASME Boiler and Pressure Vessel Code Section III, Division I, Subsection ND - Class 3 Components and ASME NQA-1 – Quality Assurance Requirements for Nuclear Facility Applications.

The COL Applicant is to provide the design details of the strainer backwash line, vent line, and their discharge locations.

9.2.1.2.2.3 CCW HX

Four 50% capacity plate type HXs, one per train, are provided. A detailed description of the HXs is given~~discussed~~ in Subsection 9.2.2.

A backflushing line is provided for each CCW HX to enable backflushing of the heat exchanger following a high differential pressure alarm that may likely be caused by accumulation of debris materials inside the heat exchanger plate flow channels.

9.2.1.2.2.4 Essential Chiller Units

Four 50% capacity chiller units, one per train, are provided. A detailed description of the essential chiller units is given in Subsection 9.2.7.

9.2.1.2.2.5 Piping

Carbon steel piping designed, fabricated, installed and tested in accordance with ASME Section III, ~~c~~Class 3 requirements, is used for the safety-related portion of the ESWS. Piping is arranged to permit access for inspection. ~~Underground piping is epoxy lined carbon steel and placed in trenches. Manholes are provided for periodic piping inspection.~~The essential service water pipe tunnel (ESWPT), including the ESW piping from this tunnel to the ESW pump intake and discharge structures and the UHS, is site specific but the existence and function of which are required in the standard design. The COL applicant is to locate the pipes entering and exiting the pipe tunnel based on the location of the UHSRS, as required. The piping located in trenches will be externally lined carbon steel and the lining material specification will vary according to the site soil chemistry. The rest of the ESWS piping will be carbon steel or internally lined carbon

steel depending on ESWS water chemistry requirements. Cathodic protection will be provided for buried piping. Access manholes will be provided as required for periodic inspection. The piping will be inspected per ASME Section XI, article IWA 5244 requirements.

9.2.1.2.2.6 Valves

The water in the ESWS does not normally contain radioactivity and, therefore, special provisions against ~~the~~ leakage to the atmosphere are not necessary. Isolation valves are provided upstream and downstream of each component to facilitate its removal from service.

~~The~~ A motor operated valve is provided at the discharge of each pump. The starting logic of the ESWP interlocks the motor operated valve with the pump operation. The closed discharge valve opens after starting the ESWP. This feature minimizes transient effects that may occur as the water sweeps out air that may be present in the system. If the motive power of the valve is lost, the valve maintains its ~~open~~current position.

Each CCW HX is provided with two separate locked closed isolation valves and piping around the heat exchanger for back flushing. One valve is located in the piping running from the inlet of the heat exchanger inlet isolation valve to the inlet of the heat exchanger discharge isolation valve, and the second valve is located in the piping running from the outlet of the heat exchanger inlet isolation valve to the outlet of the heat exchanger discharge isolation valve. To initiate back flush operation, both bypass valves are opened and the heat exchanger isolation valves are closed. Cooling water flows from the discharge side into the heat exchanger and is discharged from the heat exchanger inlet side to the ESW discharge line.

To avoid concerns with potential downstream pipe wall thinning, butterfly valves provided in the ESWS piping are not used for excessive throttling of the water flow. The valves are sized such that they are near the full open position during the various modes of plant operation. Valve opening margins are included to ensure that the design flow is met during all plant operating modes. Restriction orifices are provided downstream of the heat exchangers as required for flow balancing. Orifices having adequate differential pressures are installed downstream of the heat exchangers to prevent excess throttling of the butterfly flow control valves.

9.2.1.2.2.7 Deleted

9.2.1.2.3 System Operation

9.2.1.2.3.1 Normal Operation

The ESWS consists of four independent trains. During normal plant operation, two trains are operating and at least one other train is on standby. Each train is designed to provide 50% of cooling capacity required for design basis accident and for safe shutdown with LOOP. The ESWS is designed to perform its safety function of removing heat from the CCW heat exchangers and essential chiller units for accident mitigation and during safe shutdown ~~assuming that~~ with one train assumed ~~is~~ out of

service ~~for~~ due to maintenance coincident ~~with the loss of offsite power~~ with a LOOP and a single failure in another train. A maximum ESW operating temperature of 95° F, based on the bounding meteorological and water source conditions from representative locations in the United States, has been evaluated to adequately remove CCW HX heat load at all operating conditions. This temperature is deemed conservative and supports safely bringing the reactor coolant temperature from 350° F to 200° F 36 hours after reactor shutdown via four operating ESWS and CCWS trains. Failure of one train will not prevent the ESWS from achieving cold shutdown conditions.

Table 9.2.1-3 and Table 9.2.1-4, respectively, provide heat loads and water flow balance for various operating modes. The ESWS design heat loads are based on the maximum safe shutdown heat loads with only two ESWS trains operable while one train is assumed to have failed due to a single active component failure and another train is undergoing online maintenance. The ESW flow rate of 13,000 gpm and maximum supply temperature of 95° F are maintained even under these conditions.

The ESWP operation, ESW header pressure signals, and component cooling water pump (CCWP) operation are interlocked to enable automatic start and stop functions of the ESWPs and CCWPs. A low ~~signal of~~ ESW header pressure signal due to failure or tripping of ~~the~~an operating ESWP is alarmed in the ~~main control room (~~MCR~~)~~. When the low ESW header pressure alarm is annunciated, the stand-by ESWP and the standby ~~component cooling water pump (~~CCWP~~)~~ of the same train designation start ~~subsystem~~ automatically, ensuring continuous heat removal. ~~and the corresponding ESWP are placed in service to~~ In the same manner, a low CCW supply header pressure signal accompanied by a start signal from the CCWP in the same train will automatically start the corresponding ESWP.~~resume the cooling process.~~ This indicates that an operating CCWP has failed and requires the alternate (or standby) ESWP and CCWP in another train to start for backup. The EWSP, however, does not start if the pump discharge MOV is not in a fully closed position as a means to prevent water hammer previously discussed in Subsection 9.2.1.2.1. Only emergency core cooling system (ECCS) actuation and LOOP sequence (also termed as blackout sequence) signals can override the permissive discharge MOV interlock in order to prioritize the ESWS cooling function during an accident or a LOOP.

~~Stoppage of the operating ESWP automatically activates the alternate standby pump via interlocks between the ESWS and CCWS.~~

All valves except the pump discharge valves in the flow path are locked open. The discharge MOV~~discharge valve~~ position is monitored in the control room. At pump swapping operation, i.e. alternately operating the standby pump in lieu of the operating pump during normal power operation, ~~F~~failure of the valve to open on pump ~~re~~start is alarmed in the control room. The operator will stop the pump and restart the standby pump. The pump discharge pressure is monitored and low pressure is alarmed. The system design and layout provide~~s~~ adequate resistance to prevent pump run-out.

Voiding upstream of the pump discharge check valve in any train may occur ~~on~~ during loss of offsite power and subsequent pump trip, particularly at a low UHS water level. To maintain the pressure at this portion above the saturation pressure to preclude steam

void formation which leads to water hammer, vacuum breakers shall be installed between the pump discharge and its check valve. Air entering the piping cushions any abrupt water flow filling the voids and water hammer will not take place at pump actuation. The entering air then discharges through the automatic vent valve installed in the strainer. The motor-operated pump discharge valve, being powered by a DC power source, is unaffected by the loss of offsite power and will close when the pump stops. Water in the cooling tower spray header ~~downstream of the high point in the CCW heat exchanger discharge pipe~~ will drain to the UHS. The check valve located in the pump discharge pipe will prevent water flowing back through the pump into the intake structure. In order to preclude water hammer on pump restart, the motor operated valve at the discharge of each pump is interlocked to close when the pump is not running or is tripped. This interlock prevents the pump from starting if the valve is not closed. When the emergency electrical power becomes available from the gas turbine generators (GTGs), the ESW pump is restarted in accordance with the LOOP sequence (or blackout sequence) signal and the discharge MOV opens. Since most of the ESWS remains filled with water, the ESW pump restart will sweep out the trapped air via high point vents attached at the ESWP discharge strainers. Therefore, any potential water hammer forces, if present, will have minimum impact on the ESWS operation. The COL applicant is to provide a void detection system with alarms to detect system voiding.

Draining of ESW in an inactive or tripped ESWS train is prevented by double isolation valves downstream of the ESWP, i.e. check valve and MOV. The differential pressure measured during leakage testing of these valves is established in accordance with the MSS SP-61-1999, Pressure Testing of Steel Valves, is equal to the design pressure. Actual differential pressure of the MOV is equal to the static pressure which is lower than the pressure at testing with the pump in standby or tripped. Actual differential pressure across the check valve installed upstream of the MOV is low because the system pressure tends to work against the MOV, therefore, almost no leakage can be anticipated. The MOV and the check valve are identified in DCD Table 3.9-14 with their safety function in “maintain closed” position. The IST program with detailed criteria including valve leak rates shall be prepared by the COL applicant in accordance with COL 3.9(8). ~~Potential voids caused by insufficient venting may be formed in the ESWS lines.~~ Inservice testing of the ESWS, as described in Tier 2 DCD Subsection 3.9.6.~~2~~1, includes ~~periodic testing of the high points in the ESWS and~~ discharg~~e~~ing of any voids into the UHS [basin] and filling of the system to~~. These tests~~ ensure that voids ~~and unacceptable dynamic effects like~~which are the primary cause of water hammer are minimized.

The effect of long-term corrosion of the piping is mitigated by adding a corrosion inhibitor. The ESW is periodically sampled and chemicals are added, as required, during normal operation.

Radioactivity leakages from the CCWS to the ESWS can be detected by the radiation monitors located downstream of the CCW heat exchangers. Predetermined high radiation level is alarmed in the MCR. The operator manually isolates the contaminated ESWS train and corresponding CCW train by stopping the ESWS and CCW pumps, and thus taking the contaminated CCW heat exchanger out of service. Standby CCWS and ESWS trains are placed in service. The manual isolation valves placed on each side of the CCW heat exchanger will also be closed to ensure that the radioactive leakage is not circulated

in the ESW and eventually in the UHS. A second valve, which acts as a control valve, downstream of the CCW downstream isolation valve can also be closed to further isolate the train. ~~However, since the leaking train is taken out of service, there is no need to further isolate the CCW heat exchanger~~

Nevertheless, the CCWS, which is intermediate between the ESWS and reactor auxiliaries, has been designed so that no radioactive contamination to the environment occurs through direct leakage into the ESWS. If, however, radioactive leakage does occur in the CCWS, radiation monitors will alarm in the MCR to enable immediate stoppage of the CCW pump and isolation of the leaking train. The ~~ditto~~leaking train is ultimately placed out of service to treat this problem. Therefore, prior to occurrence of radioactive leakage into the ESWS, isolation of the affected CCWS train should have taken place first.

9.2.1.2.3.2 Emergency Operation

Loss of Coolant Accident (LOCA)

All ESWPs are automatically started by the ECCS actuation signal, and supply cooling water to their respective CCW HXs and essential chiller units. When offsite power is not available, ESWPs are automatically powered by onsite Class 1E power supplies.

During LOCA conditions, a minimum of two trains of the ESWS are required.

Loss of Offsite Power

On loss of offsite power, onsite Class 1E gas turbine generators (GTGs) are automatically started to restore power to the Class 1E 6.9 KV power buses that service safety-related active components such as ESWS pumps and discharge MOVs. GTG operation, including automatic starting and sequencing logic, is further described in Subsection 8.3.1. During this condition, a minimum of two trains of ESWS are required.

9.2.1.3 Safety Evaluation

~~The UHS has sufficient water volume to perform required cooling to mitigate the consequences of an accident. Subsection 9.2.5 discusses conformance with Regulatory Guide 1.27 (Ref. 9.2.11-2).~~

The safety-related portion of the ESWS is designed and constructed to seismic category I requirements. The safety-related portions of the ESWS are protected against natural phenomena and missiles. The following sections address natural phenomena and missiles protection.

- Section 3.3, Wind and tornado loadings~~;~~
- Section 3.4, Water Level (Flood) Protection~~;~~
- Section 3.5, Missile Protection~~;~~

- Section 3.7, Seismic Design;

Pipe rupture protection is addressed in Section 3.6, Protection against Dynamic Effects Associated with Postulated Rupture of Piping.

The ESWS continues to perform its safety function in the event of a fire. Subsection 9.5.1 addresses fire protection.

Leakage in the ESWS due to piping or component failure that could cause flooding of surrounding SSCs has been evaluated for the CCW pump and CCW HX room. Flooding mitigation in the ESWS is achieved by installation of a nonsafety grade electrode type level switch or detector in the leak-detecting floor drain box in the CCWP and CCW HX room of each train. Pre-determined water level due to leakage in any CCWP and CCW HX room is alarmed in the MCR. A nonsafety grade electrode type level switch is also provided in the leak-detection floor drain box in each essential chiller unit room located in the power source building (PS/B). Pre-determined water level due to leakage in any essential chiller room is alarmed in the MCR. The leaking train can also be identified by low outlet flow from each CCW HX or decrease in the ESWS header pressure.~~Flooding and flooding effects in the ESWS are mitigated due to the physical separations in the reactor building such as watertight doors. These doors are monitored and controlled during plant operation and maintenance. Each CCW pump & CCW HX room has a leak-detecting floor drain box with electrode type level switch to provide alarm in the MCR for the detection of a leaking train from the ESWS or CCWS. A common alarm in the MCR provides audible indication of a leak or flooding. A method of identifying a leaking ESWS train by an operator who recognizes leakage of the ESWS in either side of R/B through the above alarm from the CCW pump & CCW HX room will be the indications from the inlet pressure and outlet flow of the CCW HX and essential chiller units.~~ The leaking ESWS and CCWS trains ~~is~~are then isolated by shutting down the corresponding ESWS pump and CCWS pump, and activating the standby and intact ESWS and CCWS trains. If, however, the leak detector fails to alarm, or the operator fails to recognize the flooding signals, the physical separations, which include water tight doors, between the east side of the ESWS enclosing ESWS trains A and B and the west side of the ESWS enclosing ESWS trains C and D will serve to isolate flooding and prevent it from propagating to other trains.

The ESWS equipment and piping are located either underground or in the pump house and the R/B. These buildings are designed to withstand the effects of earthquakes, tornadoes, hurricanes, floods, external missiles and other appropriate natural phenomena. Sections 3.3, 3.4, 3.5, 3.7, 3.8 and 9.5 describe the bases of the structural design and protection from natural events.

Radioactive contamination of the ESWS is unlikely but can occur if the CCWS system is contaminated and then leaks into ESWS via the CCW HX. Subsection 9.2.1.2.1 describes prevention of this leakage to the environment.

Four independent, redundant trains, each powered from an independent Class 1E power supplies, are provided. The system is designed to provide the required cooling to

mitigate the consequences of an accident with a single failure and one train unavailable due to maintenance coincident with a loss of offsite power.

The ESWS and its components are initially tested in accordance with the program given in Section 14.2. Periodic in-service functional testing is performed as described in Subsection 9.2.1.4. Section 6.6 lists appropriate ASME Section XI requirements for the safety-related portion of the system.

Failure mode and effects analysis (FMEA) Table 9.2.1-2 concludes that no single failure, coincident with one train being unavailable due to maintenance and a loss of offsite power compromises the safety functions of ESWS.

The ESWS is not shared with multi-units.

The COL Applicant is to provide the evaluation of the ESWP at the lowest probable water level of the UHS. The COL applicant is to develop recovery procedure in the event of approaching low water level of UHS.

The ESWS is designed for operation at low water temperature of 32° F during all modes of plant operation. The COL Applicant is to provide ~~the~~ protection of the site specific portions of the ESWS such as the ESWS blowdown line, FSS supply line, ESWPT piping towards the intake and discharge structures, i.e. piping running between the nuclear island and UHSRS, and any ESWS piping in the UHSRS against adverse environmental, operating, and accident conditions that can occur such as freezing, low temperature operation, and thermal overpressurization. ~~The COL Aplicant is to provide the preventive measures for protection against adverse environmental conditions.~~

The COL Applicant is to provide the safety evaluation of the capability of the ESWS to: (1) isolate its site-specific, nonsafety-related portions such as the ESWS blowdown line and FSS supply line when applicable; and (2) provide measures to prevent long-term corrosion and organic fouling that may degrade its performance, per Generic Letter (GL) 89-13.~~for the ESWS design related to the site specific conditions.~~

Some portions of the system are nonsafety-related, e. g., sections of pipe in heat exchanger drain piping after the isolation valves. These boundary isolation valves which provide separation between the safety-related and nonsafety-related portions are normally closed. During a design basis event, postulated simultaneous failure of all nonsafety-related piping would not impact operation of any ESWS train, thus will not affect the ESWS capability to perform its safety related functions.

The COL applicant is to specify appropriate sizes of piping and pipe fittings such as restriction orifices to prevent potential plugging due to debris buildup, and develop maintenance and test procedures to monitor debris build up and flush out debris.~~The COL Applicant is to provide the UHS water volume, maximum operating water temperature and the lowest water level for ESWPs~~

9.2.1.4 Inspection and Testing Requirements

The ESWS is hydrostatically tested prior to initial startup. Preoperational testing is described in Section 14.2. System performance during normal operation is verified by monitoring system pressures, temperatures and flows.

Inservice inspection and testing of piping is performed in accordance with the requirements of ASME Section XI, as discussed in section 6.6.

Inservice testing of active pumps and valves is performed to assure operational readiness, as described in subsection 3.9.6. Acceptance criteria for the monitored parameters are established to allow for pump degradation and to maintain acceptable pump performance for all modes of plant operation.

~~The p~~Periodic performance verification of the ESWS components, including the heat exchanger(s) ~~which is~~ cooled by the ESW, is performed to detect performance degradation due to fouling. The heat exchangers are monitored per test program developed in accordance with the requirements of GL 89-13. Acceptance criteria for performance verification are established to allow for degradation and maintain acceptable heat exchanger performance for all modes of plant operation.

The COL Applicant shall conduct periodic inspection, monitoring, maintenance, performance and functional testing and verification of the ESWS and UHS piping and components, including the heat transfer capability of the CCW heat exchangers and essential chiller units, consistent with GL 89-13 and GL 89-13 supplement 1. The COL Applicant is to develop operating procedures to periodically alternate the operation of the trains thus performance of all trains will be regularly monitored.

9.2.1.5 Instrumentation Requirements

The operator has functional control and monitoring capability of the ESWS in the MCR and also at the remote shutdown room (RSR). All functions described below that are available in the MCR are also available at the RSR.

9.2.1.5.1 ESWS discharge pressure

The ESWP discharge pressure is locally indicated, and pressure readings are used for ESWP performance testing.

9.2.1.5.2 ESW header line pressure

ESW header pressure is indicated both locally and in the MCR. When the pressure decreases due to ~~the~~ failure or inadvertent shutdown of the operating pump or valve misalignment, a low pressure alarm is transmitted both locally and to the MCR. The ESW header line pressure is categorized as a PAM variable to assist the MCR personnel in evaluating the safety status of the plant.

The ESW header line pressure signal is also used for backup activation of the alternate ESWS train as discusses in Subsection 9.2.1.2.3.1.

9.2.1.5.3 CCW HX essential service water flow

The FSW flow rate to the CCW HX heat exchanger is indicated locally and in the MCR. A low flow alarm is transmitted both locally and to the MCR. The CCW HX ESW flow is also categorized as a PAM variable.

9.2.1.5.4 Essential chiller unit service water flow~~ESWP motor essential service water flow~~

The ESW flow rate to the essential chiller units is indicated locally.~~The flow rate is indicated in the MCR. A low flow alarm is transmitted to the MCR.~~

9.2.1.5.5 Differential pressure of strainer

Differential pressure of strainers located in each ESWP discharge line is indicated locally and in the MCR. High differential pressure alarm is transmitted locally and to the MCR. The differential pressure signals activate the start and stop functions of the ESWP discharge strainers.~~Differential pressure of CCW HX inlet strainer is locally indicated.~~

9.2.1.5.6 Radiation monitor

Radiation monitors are located downstream of the CCW HX and the signal is indicated locally and in the MCR. When the radiation level exceeds the setpoint, an alarm is transmitted both locally and to the MCR.

9.2.1.5.7 Other instrumentation

As shown in the piping and instrumentation diagram of the ESWS, ~~the~~ other instrumentation and thermowells for temperature detection are provided where required to support testing and maintenance.

In addition, remotely operated pump discharge valves are provided with position indication instrumentation. The valve positions are monitored in the MCR. Valve operation is interlocked with the pumps as noted in Subsection 9.2.1.2.3.1. The ESW pump control and status indication are provided in the MCR. The ESWS is interlocked with the CCWS such that at either a low ESW supply header pressure or at low CCW header pressure, alternate standby pumps are being automatically activated. There are no interlocks between the ESWS and the essential chilled water system.

9.2.2 Component Cooling Water System

9.2.2.1 Design Bases

The component cooling water system (CCWS) provides cooling water required for various components during all plant operating conditions, including normal plant operating, abnormal and accident conditions. It is an intermediate, closed loop cooling system that transfers heat from the various components to the ESWS. The CCWS is designed to meet the relevant requirements of GDC 2, GDC 4, GDC 44, GDC 45, and GDC 46 (Ref. 9.2.11-1). Its design bases are further described below.

9.2.2.1.1 Safety Design Basis

intake basin is deeper than the UHS basin. This is to assure adequate NPSH to the ESW pump.

The UHS design concept described herein is depicted in Figure 9.2.5-1. The UHS design and process parameters are provided in Table 9.2.5-3.

9.2.5.2.2 System Operation

Each ESWP takes suction from its ESW intake basin located beneath the pump house as described in Subsection 9.2.5.2.1. The water flows through the CCW heat exchangers and essential chiller units and then is cooled by the cooling tower before being returned to the basin. A portion of the water is discharged as blowdown water to maintain water chemistry via the ESWS when the makeup water is available. The blowdown rate is determined using a conductivity cell located at ESW pump discharge and is based on the total dissolved solids in the water and the makeup water source. The blowdown operation is terminated during accident mitigation or loss of make-up water.

Heat rejection to the environment is effected by direct contact with the cooling tower forced airflow, which provides evaporative cooling of the ESW return flow. During normal operation, evaporation, drift and blowdown losses are replaced with the makeup water. Water level controllers provided in each basin automatically open and close the makeup control valves. Low and high water level are annunciated in the main control room (MCR).

The maintained water level in each UHS basin assures adequate NPSH for the ESWP under all operating modes. Assuming one train is out of service for maintenance and the source of makeup water is unavailable for a period of thirty days after the accident, the combined inventory of three basins provides a thirty-day cooling water supply.

The ESWS together with the UHS are designed, arranged and operated to minimize the effects of water hammer forces. The system layout assures water pressure remains above saturation conditions throughout the system. High point vents and low point drains are provided. The ESW pump is designed to provide positive pressure at the spray nozzle headers. This, together with the high point vents, minimizes system drain down in the idle trains or upon loss of offsite power and subsequent pump trip.

The following features preclude or minimize water hammer forces:

- On loss of off-site power (LOOP), the discharge MOV of the operating train is closed by DC power. This, together with the pump discharge check valve, prevents draindown to the basin.

- The ESW pump start logic interlocks the discharge MOV operation with the pump operation. The re-start of the tripped pump or start of the stand-by pump opens the discharge valve slowly, sweeping out voids from the discharge piping and CT riser and distribution piping.

- The system valve lineup and periodic inservice testing of the idle trains, including high point venting, help minimize potential voids and water hammer forces.

standby non-ESW pump is automatically started. Flow indicators with low flow alarms are provided in each TCS heat exchanger outlet line.

Temperature indication is provided for the service water supply to and discharge from each TCS heat exchanger to determine the temperature differential across the heat exchanger. The temperature differential is used for monitoring heat exchanger performance.

Differential pressure measurement across the strainer is provided and a high differential pressure is alarmed. The operator places the standby strainer in service, isolates the clogged strainer, and initiates a manual backwash.

9.2.10 Combined License Information

Information for following items is required to be provided in support of the Combined License Application:

COL 9.2(1) *The COL Applicant is to provide the evaluation of the ESWP at the lowest probable water level of the UHS. The COL Applicat~~ion~~ is to develop recovery procedures in the event of approaching low water level of UHS.*

COL 9.2(2) *The COL Applicant is to provide ~~the~~ protection of the site-specific portions of the ESWS against adverse environmental, operating, and accident conditions that can occur, such as freezing, low temperature operation, and thermal overpressurization. ~~The COL Applicant it to provide the preventive measures for protection against adverse environmental conditions.~~*

COL 9.2(3) *The COL Applicant is to determine source and location of the UHS.*

COL 9.2(4) *The COL Applicant is to determine location and design of the ESW intake structure.*

COL 9.2(5) *The COL Applicant is to determine location and design of the ESW discharge structure.*

COL 9.2(6) *The COL Applicant is to provide ESWP design details – required total dynamic head with adequate margin, NPSH available, and the mode of cooling of the ESWP motor. The COL Applicant is to assure that the sum of the shut-off head of the selected ESW pumps and the static head will not result in system pressure that exceeds the ESWS design pressure at any location within the system. ~~etc.~~The COL Applicant is to evaluate the potential for vortex formation based on the most limiting assumptions that apply.*

COL 9.2(7) *The COL Applicant is to ~~provide~~address the piping, valves, lining material specifications for piping and fittings as applicable, including those at the boundary between the safety-related and nonsafety-related portions, and other design of the ESWS related to the site specific conditions, ~~including~~*

~~the safety evaluation.~~ The COL Applicant is also to design the pipes entering and exiting the pipe tunnel based on the location of the UHSRS.

COL 9.2(8) The COL Applicant is to specify the following ESW chemistry requirements:

- *A chemical injection system to provide non-corrosive, non-scale forming conditions to limit biological film formation.*
- *Type of biocide, algaecide, pH adjuster, corrosion inhibitor, scale inhibitor and silt dispersant based on the site conditions.*

COL 9.2(9) COL Applicant is to confirm the storage capacity and usage of the potable water.

COL 9.2(10) COL Applicant is to confirm that all State and Local Department of Health and Environmental Protection Standards are applied and followed.

COL 9.2(11) The COL Applicant is to confirm the source of potable water to the site and the necessary required treatment.

COL 9.2(12) COL Applicant is to confirm that the sanitary waste is sent to the onsite plant treatment area or they will use the city sewage system.

COL 9.2(13) COL Applicant is to identify the potable water supply and describe the system operation.

COL 9.2(14) COL Applicant is to confirm Table 9.2.4-1 for required components and their values.

COL 9.2(15) The COL Applicant is to determine the total number of people at the site and identify the usage capacity. Based on these numbers the COL Applicant is to size the potable water tank and associated pumps.

COL 9.2(16) The COL Applicant is to provide values to the component Table 9.2.4-1 based on system and component descriptions from Section 9.2.4.2.1 and 9.2.4.2.2 respectively.

COL 9.2(17) The COL Applicant is to determine the total number of sanitary lift stations and is to size the appropriate interfaces.

COL 9.2(18) The COL Applicant is to determine the type of the UHS based on specific site conditions and meteorological data.

COL 9.2(19) The COL Applicant is to design the UHS to receive its electrical power supply, if required by the UHS design, from safety busses so that the safety functions are maintained during LOOP. The UHS also receives its standby electrical power from the onsite emergency power supplies during a LOOP.

specific meteorological data and heat loads data for UHS performance analysis per Regulatory Guide 1.27.

COL 9.2(23) The COL Applicant is to provide test and inspection requirements of the UHS. These ~~is to~~ include inspection and testing requirements necessary to demonstrate that fouling and degradation mechanisms are adequately managed to maintain acceptable UHS performance and integrity.

COL 9.2(24) The COL Applicant is to provide the required alarms, instrumentation and controls details based on the type of UHS to be provided.

COL9.2(25) The COL applicant is to ~~will~~ develop ~~operating and maintenance procedures for the~~system filing, venting, keeping the system full, and operational procedures to minimize the potential for water hammer; to analyze the system for water hammer impacts; to design the piping system to withstand potential water hammer forces; and to analyze inadvertent water hammer events ~~ESWS to address water hammer issues~~ in accordance with NUREG-0927.

COL 9.2(26) The COL applicant is to specify appropriate sizes of piping and pipe fittings such as restriction orifices to prevent potential plugging due to debris buildup,and develop maintenance and test procedures to monitor debris build up and flush out debris.

COL 9.2(27) The COL Applicant is to develop a milestone schedule for implementation of the operating and maintenance procedures for water hammer prevention.

COL 9.2(28) The COL Applicant is to provide the piping, valves, materials specifications, and other design details related to the site specific UHS.

COL 9.2(28) The COL Applicant is to provide the piping, valves, materials specifications, and other design related to the site specific UHS.

COL 9.2(29) The COL applicant is to provide the safety evaluation of the capability of the ESWS to: (1) isolate its site-specific, nonsafety-related portions; and (2) provide measures to prevent long-term corrosion and organic fouling that may degrade its performance, per Generic Letter (GL) 89-13.

COL9.2(30) The COL Applicant shall conduct periodic inspection, monitoring, maintenance, performance and functional testing of the ESWS and UHS piping and components, including the heat transfer capability of the CCW heat exchangers and essential chiller units, consistent with GL 89-13 and GL 89-13 Supplement 1. The COL Applicant is to develop operating procedures to periodically alternate the operation of the trains to ensure performance of all trains is regularly monitored.

COL9.2(31) The COL applicant is to verify the system layout of the ESWS and UHS and is to develop operating procedures to assure that the ESWS and UHS are

above saturation conditions for all operating modes.

COL 9.2(32) The COL applicant is to provide a void detection system with alarms to detect system voiding.

COL9.2(33) The COL Applicant is to provide the design details of the strainer backwash line, vent line, and their discharge locations.

9.2.11 References

9.2.11-1 General Design Criteria for Nuclear Power Plants, NRC Regulations Title 10, Code of Federal Regulations, 10CFR Part 50, Appendix A.

9.2.11-2 Ultimate Heat Sink for Nuclear Power Plants, Regulatory Guide 1.27 Revision 2, January 1976.

9.2.11-3 Quality Group Classifications and Standards for Water-, Steam-, and Radioactive-Waste-Containing Components of Nuclear Power Plants, NRC Regulatory Guide 1.26 Revision 4, March 2007.

9.2.11-4 National Primary Drinking Water Standards, Environmental Protection Agency, Title 40, Code of Federal Regulations, 40CFRPart 141.

9.2.11-5 Occupational Safety and Health Standard, Occupational Safety and Health Administration, Department of Labor, Title 29, Code of Federal Regulations, 29CFRPart 1910.

9.2.11-6 American Nuclear Society Standards Committee Working Group, American National Standard for Decay Heat Power in Light Water Reactors, ANS 5.1, August 1979.

9.2.11-7 Electric Power Research Institute Palo Alto, California, Advanced Light Water Reactor Utility Requirements Document, Rev.8.

9.2.11-8 ANSI B31.1 Power Piping Code.

Table 9.2.1-1 Essential Service Water System Component Design Data

Essential Service Water Pump	
Quantity	4
Type	Vertical, centrifugal, mixed flow
Design flow rate	13,000 gpm
Design pressure	150 psig
Design temperature	140 °F
Materials	Stainless steel
Equipment Class	3
Electric Power Supply Class	Class 1E power source
Essential Service Water Pump Outlet Strainer	
Quantity	8
Design flow rate	13,000 gpm
Design pressure	150 psig
Design temperature	140 °F
Maximum allowed differential pressure	7 psi at 13,000 gpm
Strainer mesh size	3 mm
Equipment Class	3
Electric Power Supply Class	Class 1E power source
~~**Component Cooling Water Heat Exchanger Inlet Strainer**~~	
~~Quantity~~	~~4~~
~~Design flow rate~~	~~11,500 gpm~~
~~Design pressure~~	~~150 psig~~
~~Design temperature~~	~~140 °F~~
~~Equipment Class~~	~~3~~
Essential Service Water Pump Discharge Valve	
Quantity	4
Design flow rate	13,000 gpm
Design pressure	150 psig
Design temperature	140 °F
Equipment Class	3
Electric Power Supply Class	Class 1E power source

Table 9.2.1-2 Essential Service Water System Failure Modes and Effects Analysis (Sheet 1 of ~~2~~5)

Item	Description of Component	Safety Function	Plant Operating Mode	Failure Mode(s)	Method of failure Detection	Failure Effect on System Safety Function Capability	General Remarks
1	ESWP (MPP-001A,B,C,D)	Supplies ESW to CCW HX and Essential Chiller Unit	A, Startup, normal shutdown, normal operation, refueling B, Accident, s~~S~~afe shutdown, c~~C~~ooldown – loss of offsite power	A1, Fails to start upon command A2, Trips for any reason B1, Fails to start upon command B2, Trips for any reason.	A1, Pump status light indication in MCR A2, Pump status light indication in MCR B1, Pump status light indication in MCR B2, Pump status light indication in MCR	A1, None Remaining three 50% capacity pumps are available. Minimum two pumps are required for safety function. A2, None Same as A1. B1, None Same as A1. B2, None Same as A1.	One train unavailable due to maintenance does not affect the safety functions because only a minimum of two pumps are required.

Table 9.2.1-2 Essential Service Water System Failure Modes and Effects Analysis (Sheet 2 of ~~2~~5)

Item	Description of Component	Safety Function	Plant Operating Mode	Failure Mode(s)	Method of failure Detection	Failure Effect on System Safety Function Capability	General Remarks
2	ESWP Discharge Valve (MOV-503A,B,C,D), fail as is, motor operated valve	Opens to provide flow path	A, Startup, normal shutdown, normal operation, refueling B, Accident, ~~S~~safe shutdown, ~~C~~cooldown – loss of offsite power	A~~.~~, Fails in closed position B~~.~~, Fails in closed position	A, Position indication in MCR B, Position indication in MCR	A, None Remaining three 50% capacity pumps are available. Minimum two pumps are required for safety function. B, None Same as A.	One train unavailable due to maintenance does not affect the safety functions because only a minimum of two pumps are required.

Table 9.2.1-2 Essential Service Water System Failure Modes and Effects Analysis (Sheet 3 of 5)

Item	Description of Component	Safety Function	Plant Operating Mode	Failure Mode(s)	Method of failure Detection	Failure Effect on System Safety Function Capability	General Remarks
3	ESWP Discharge Strainer (SST-001A, B, C, D and SST-002A, B, C, D)	Starts and opens to provide flow path to backwash flow before strainer clogging to maintain ESW supply to CCW HX	A, Accident, Safe shutdown, cooldown – loss of offsite power	A, Fails to start and fails to open on remote manual demand	A, Position indication in MCR	A, None Remaining three 50% capacity trains are available. Minimum of two trains are required for safety function.	One train unavailable due to maintenance does not affect the safety functions because only a minimum of two ESWS trains are required.
		Stops and isolates backwash flow to prevent drain down which leads water hammer at pump restart	A, Startup, normal shutdown, normal operation, refueling, cooldown B, Accident, safe shutdown, – loss of offsite power	A, Fails to closed position at pump stop signal B, Fails to closed position at pump stop signal	A, Position indication in MCR B,Position indication in MCR	A, None Backwash flow can be isolated by closing ESWP Discharge Strainer Backwash Isolation Valve at pump stop signal B, None Same as A.	

Table 9.2.1-2 Essential Service Water System Failure Modes and Effects Analysis (Sheet 4 of 5)

Item	Description of Component	Safety Function	Plant Operating Mode	Failure Mode(s)	Method of failure Detection	Failure Effect on System Safety Function Capability	General Remarks
4	ESWP Discharge Strainer Backwash Isolation Valve to Normal Drain Path (EWS-MOV-573A, B, C, D and EWS-MOV-574A, B, C, D)	Starts and opens to provide flow path to backwash flow before strainer starts to clog to maintain ESW supply to CCW HX	A, Accident, safe shutdown, – loss of offsite power	A, Fails to open on remote manual demand	A, Position indication in MCR	A, None Remaining three 50% capacity trains are available. Minimum of two trains are required for safety function.	One train unavailable due to maintenance does not affect the safety functions because only a minimum of two ESWS trains are required.
		Stops and isolates backwash flow to prevent drain down which leads water hammer at pump restart	A, Startup, normal shutdown, normal operation, refueling, cooldown B, Accident, safe shutdown, – loss of offsite power	A, Fails to closed position at pump stop signal B, Fails to closed position at pump stop signal	A, Position indication in MCR B, Position indication in MCR	A, None Backwash flow can be isolated by closing ESWP Discharge Strainer Backwash Isolation Valve at pump stop signal B, None Same as A.	

Table 9.2.1-2 Essential Service Water System Failure Modes and Effects Analysis (Sheet 5 of 5)

Item	Description of Component	Safety Function	Plant Operating Mode	Failure Mode(s)	Method of failure Detection	Failure Effect on System Safety Function Capability	General Remarks
5	ESWS Blowdown Control Valve (EWS-HCV-010, 011, 012, 013), fail close air operated valve	Closes to isolate blowdown	All	Fails to close upon command	Position indication in MCR	None. Blowdown can be isolated by closing the manual valves (VLV-541A,B,C,D, VLV-543A,B,C,D) Effect of uncontrolled blowdown for 30 minutes on basin inventory is insignificant.]	

Table 9.2.1-3 Essential Service Water System Heat Loads (in Btu/hr)

Train	Component	No. of components	Startup		Normal Power Operation		Cooldown by CS/RHRS		Accident (LOCA)		Safe Shutdown	
A & B	CCW Heat Exchanger	2	2	65.~~4~~5 x 10^6	1	50.0 x 10^6	2	220.~~4~~3 x 10^6	1	161.7 x 10^6	1	190.9 x 10^6
	Essential Chiller Unit	2	2	8.66 x 10^6	1	4.33 x 10^6	2	8.66 x 10^6	1	4.33 x 10^6	1	4.33 x 10^6
	~~ESW pump motor~~	~~2~~	~~2~~	~~0.10 x 10^6~~	~~1~~	~~0.05 x 10^6~~	~~2~~	~~0.10 x 10^6~~	~~1~~	~~0.05 x 10^6~~	~~1~~	~~0.05 x 10^6~~
Total			2	74.16x10^6	1	54.3~~8~~3 x 10^6	2	22~~9~~8.~~1~~96x10^6	1	166.0~~8~~3x10^6	1	195.2~~8~~3x10^6
C & D	CCW Heat Exchanger	2	2	61.2 x 10^6	1	41.~~2~~3 x 10^6	2	221.2 x 10^6	1	161.7 x 10^6	1	190.9 x 10^6
	Essential Chiller Unit	2	2	8.66 x 10^6	1	4.33 x 10^6	2	8.66 x 10^6	1	4.33 x 10^6	1	4.33 x 10^6
	~~ESW pump motor~~	~~2~~	~~2~~	~~0.10 x 10^6~~	~~1~~	~~0.05 x 10^6~~	~~2~~	~~0.10 x 10^6~~	~~1~~	~~0.05 x 10^6~~	~~1~~	~~0.05 x 10^6~~
	Total		2	69.~~9~~86 x 10^6	1	45.~~58~~63x10^6	2	229.~~9~~86 x 10^6	1	166.0~~8~~3 x 10^6	1	195.2~~8~~3 x 10^6

Table 9.2.1-4 Essential Service Water System Flow Balance (in gpm)

Train	Component	No. of components	Startup		Normal Power Operation		Cooldown by CS/RHRS		Accident (LOCA)		Safe Shutdown	
A & B	CCW Heat Exchanger	2	2	22000	1	11000	2	22000	1	11000	1	11000
	Essential Chiller Unit	2	2	1086	1	543	2	1086	1	543	1	543
	~~ESW pump motor~~	~~2~~	~~2~~	~~50~~	~~1~~	~~25~~	~~2~~	~~50~~	~~1~~	~~25~~	~~1~~	~~50~~
	~~Continuous s~~Strainer backwash flow~~lowdown~~	2	2	1000	1	500	2	1000	1	500	1	500
	Total		2	~~24136~~24086	1	~~12068~~12043	2	~~24136~~24086	1	~~12068~~12043	1	~~12068~~12043
C & D	CCW Heat Exchanger	2	2	22000	1	11000	2	22000	1	11000	1	11000
	Essential Chiller Unit	2	2	1086	1	543	2	1086	1	543	1	543
	~~ESW pump motor~~	~~2~~	~~2~~	~~50~~	~~1~~	~~25~~	~~2~~	~~50~~	~~1~~	~~25~~	~~1~~	~~25~~
	~~Continuous s~~Strainer ~~lowdown~~backwash	2	2	1000	1	500	2	1000	1	500	1	500

	flow											
	Total		2	24086	1	12043	2	24086	1	12043	1	12043
	Total		2	~~24136~~24086	1	~~12068~~12043	2	~~24136~~24086	1	~~12068~~12043	1	12043~~12068~~

Table 9.2.7-1 Essential Chilled Water System Component Design Data

Essential Chiller Unit	
Type	Centrifugal Type, Electric-drive
Quantity	4
Refrigeration Capacity	3,600,000 Btu/hr-unit
Chilled Water Inlet temperature	40° F
Chilled Water Outlet temperature	56° F
Chilled Water Flow Rate	440 gpm
Cooling water inlet temperature	~~100~~95° F
Cooling water outlet temperature	111~~116~~° F ;delta T= 16° F
Essential chilled water pump	
Type	Centrifugal type
Quantity	4
Flow rate	440 gpm
Head	165 feet

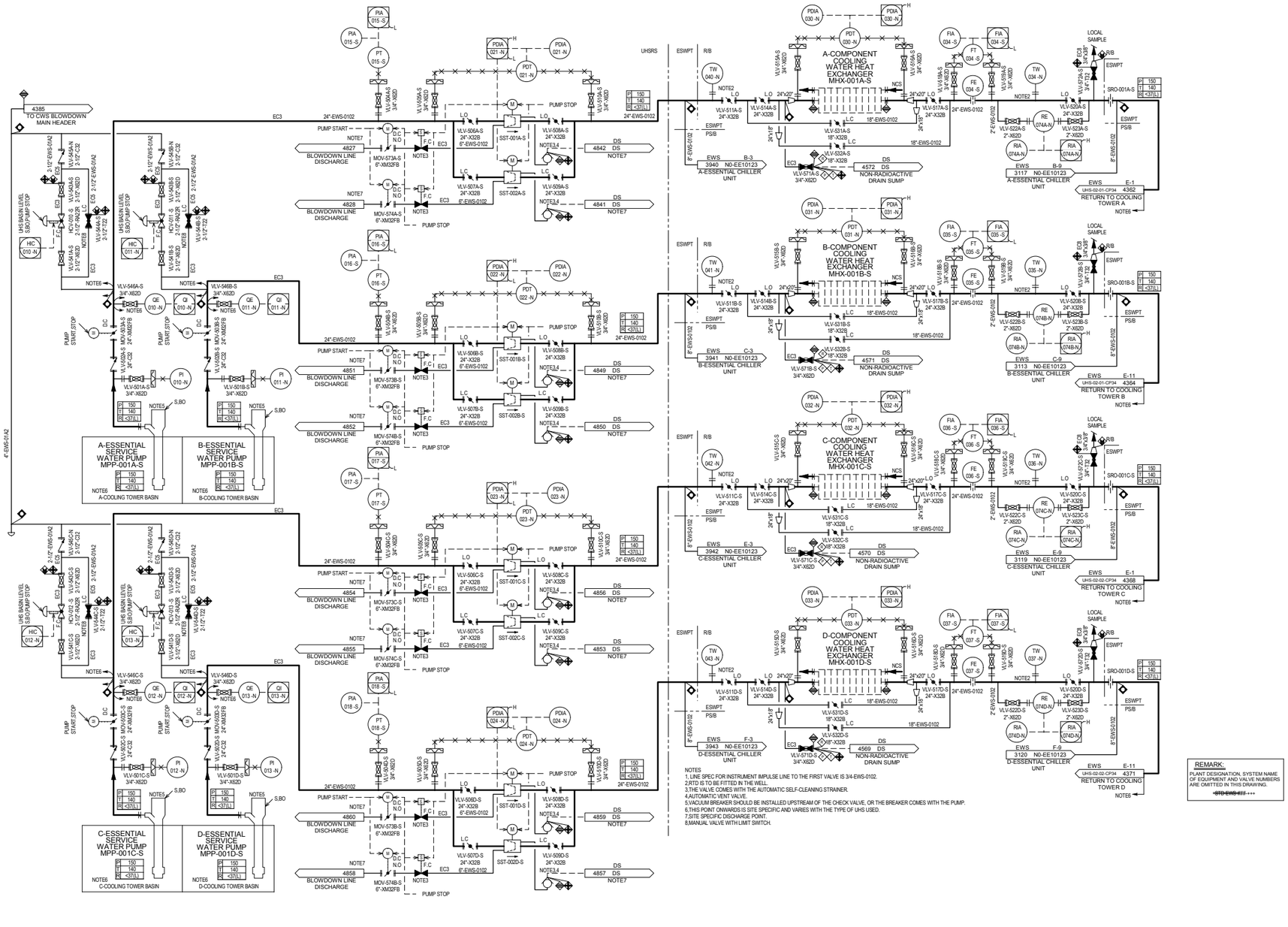

Figure 9.2.1-1 Essential Service Water System Piping and Instrumentation Diagram (Sheet 1 of ~~3~~2)

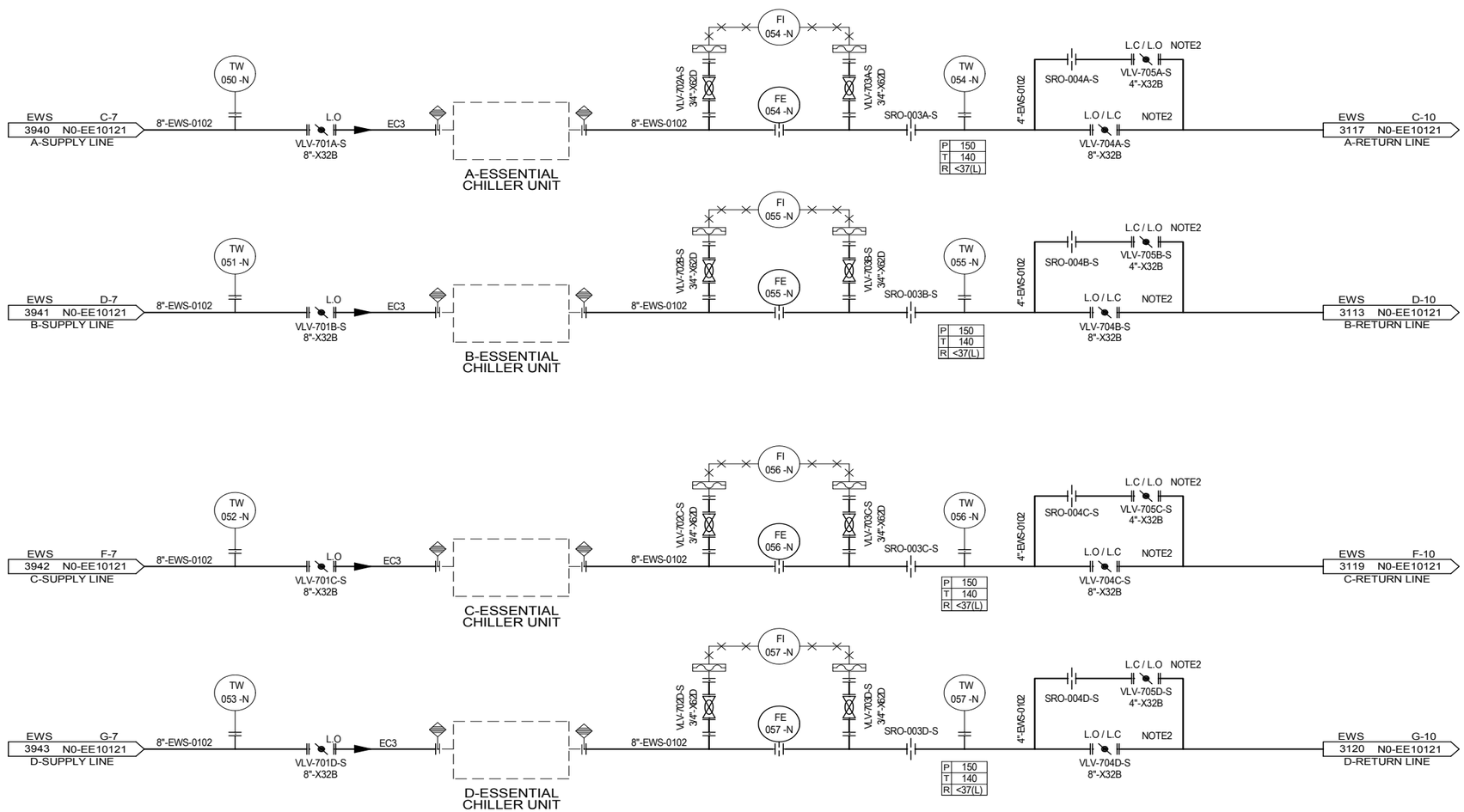

NOTES
1, LINE SPEC FOR INSTRUMENT IMPULSE LINE TO THE FIRST VALVE IS 3/4-EWS-0102.
2, OPENING THE VALVE AT THE MAIN LINE REQUIRES CLOSING THE VALVE AT THE BYPASS LINE AND VICE VERSA.

REMARK:
PLANT DESINATION, SYSTEM NAME OF EQUIPMENT AND VALVE NUMBERS ARE OMITTED IN THIS DRAWING.
~~=STD-EWS-###-+++~~

Figure 9.2.1-1 Essential Service Water System Piping and Instrumentation Diagram (Sheet 2~~3~~ of ~~3~~2)

Table 9.3.2-6 Process Grab Sample Points [a] (Sheet 2 of 3)

Sample Point No.	Sample Point Name	Analysis	Pressure[b] (psig)	Temperature [b] (°F)
28	B-Component Cooling Water surge Tank Outlet	Conductivity, halogens, dissolved oxygen and N_2H_4	80	100
29	A,B-Spent Fuel Pit Filter Outlet	Boron, Halogens, radioactivity, pH and conductivity	100	120
30	A,B-Spent Fuel Pit Demineralizer Inlet	Boron, Halogens, radioactivity, pH and conductivity	100	120
31	Non-radeoactive Drain Sump Pump Discharge	Radioactivity	145	140
32	A-SG Blowdown Cation Bed Demineralizer Outlet	Radioactivity, Specific conductivity, Cation conductivity, sodium ion, chloride ion,SO_4 and pH	145	113
33	B-SG Blowdown Cation Bed Demineralizer Outlet	Radioactivity, Specific conductivity, Cation conductivity, sodium ion, chloride ion,SO_4 and pH	145	113
34	A-SG Blowdown Mix Bed Demineralizer Outlet	Radioactivity, Specific conductivity, Cation conductivity, sodium ion, chloride ion,SO_4 and pH	145	113
35	B-SG Blowdown Mix Bed Demineralizer Outlet	Radioactivity, Specific conductivity, Cation conductivity, sodium ion, chloride ion,SO_4 and pH	145	113
36	Steam Generator blowdown demineralizers inlet filters inlet	Radioactivity, Specific conductivity, Cation conductivity, sodium ion, chloride ion,SO_4 and pH	145	113
37	Steam Generator blowdown demineralizers inlet	Radioactivity, Specific conductivity, Cation conductivity, sodium ion, chloride ion,SO_4 and pH	145	113
38	A-, B-, C-, D-Component Cooling Water Heat Exchanger Essential Service Water Side Discharge	Radioactivity	150	140
Yard Area				
1	External Water Makeup	pH, conductivity	Atmospheric	Ambient
2	Waste Water Effluent (from sump)	pH, conductivity	Atmospheric	Ambient
3	Sewage and Industrial waste Effluent	pH, conductivity	Atmospheric	Ambient
4	Primary Makeup Water Tank outlet	Dissolved oxygen, radioactivity, halogens, conductivity, pH	155	Ambient
5	Refueling Water Storage Auxiliary Tank outlet	Boron, halogens	Atmospheric	Ambient
6	Auxiliary Boiler Feed water	pH[c], SiO_2, Specific Conductivity[c], Suspended solids, Cation Conductivity[c]	110	85
7	Auxiliary Boiler steam	Cation Conductivity	110	345
Radwaste				
1	C/V Reactor Coolant Drain Tank Outlet	Boron, halogens, pH, conductivity, O_2, H_2 and turbidity	155	120
2	C/V Sump Pump Discharge	Boron, halogens, pH, conductivity, chloride ion and radioactivity	40	120
3	R/B Sump Pump Discharge	Boron, halogens, pH, conductivity, chloride ion and radioactivity	55	105

Chapter 13

Page	Location (e.g., subsection with paragraph/ sentence/ item, table with row/column, or figure)	Description of Change
13.6-7	Section 13.6.5	Changed the revision number and date of references 13.6-6 and 13.6-7. [RAI 613-4912, Question 13.06.02-19 through 26]

13.6-6 US-APWR Design Certification Physical Security Element Review (Safeguards Information), Rev. ~~2~~3, ~~November~~October ~~2009~~2010

13.6-7 US-APWR High Assurance Evaluation Assessment (Safeguards Information), Rev. ~~1~~2, ~~November~~October ~~2009~~2010

13.6-8 US-APWR Cyber Security Program, MUAP-08003-P, Rev. 1, August 2008

Chapter 14

Page	Location (e.g., subsection with paragraph/ sentence/ item, table with row/column, or figure)	Description of Change
14.2-188, 189	Table 14.2-2	Corrected following title name, revision errors of the listed regulatory guide: Item 2, RG 1.16: Revision number and published date from Rev.3, January to Rev.4, August. Item 4, RG 1.28: the title to include "(Design and Construction)" Item 7, RG 1.41: Revision number from Rev.3 to Rev.0. Item 15, RG 1.128: wording of the title from Large Lead to Vented Lead-Acid. Item 17, RG 1.140: wording of the title from Normal Ventilation Atmosphere Cleanup Systems to Air Filtration and Adsorption Units of Normal Atmosphere Cleanup Systems.

Table 14.2-2 Regulatory Guides Associated with the ITP (Sheet 1 of 2)

1	Regulatory Guide 1.9, "Application and Testing of Safety-related Diesel-Generators in Nuclear Power Plants." Rev. 4, March 2007
2	RG 1.16, "Reporting of Operating Information – Appendix A Technical Specifications," Rev. ~~3~~4, ~~January~~ August 1975
3	RG 1.20, "Comprehensive Vibration Assessment Program for Reactor Internals during Pre-operational and Initial Startup Testing," Rev. 3, March 2007
4	RG 1.28, "Quality Assurance Program Requirements (Design and Construction)," Rev. 3, August 1985
5	RG 1.30, "Quality Assurance Requirements for the Installation, Inspection, and Testing of Instrumentation and Electrical Equipment," August 1972
6	RG 1.37, "Quality Assurance Requirements for Cleaning of Fluid Systems and Associated Components of Water-Cooled Nuclear Power Plants," Rev. 1, March 2007
7	RG 1.41, "Preoperational Testing of Redundant Onsite Electric Power Systems to Verify Proper Load Group Assignments," Rev. 0~~3~~, March 1973
8	RG 1.52, "Design, Inspection and Testing, Criteria for Air Filtration and Adsorption Units of Post-Accident Engineered-Safety-Feature Atmospheric Cleanup Systems in Light-Water-Cooled Nuclear Power Plants," Rev. 3, June 2001
9	RG 1.68, "Initial Test Programs for Water-Cooled Nuclear Power Plants," Rev. 3, March 2007
10	RG 1.68.2, "Initial Startup Test Program to Demonstrate Remote Shutdown Capability for Water-Cooled Nuclear Power Plants," Rev. 1, July 1978
11	RG 1.68.3, "Preoperational Testing of Instrument and Control Air Systems," Rev. 0, April 1982
12	RG 1.79, "Preoperational Testing of Emergency Core Cooling Systems for Pressurized Water Reactors," Rev. 1, September, 1975
13	RG 1.116, "Quality Assurance Requirements for Installation, Inspection, and Testing of Mechanical Equipment and Systems," Rev. 0, June 1976
14	RG 1.118, "Periodic Testing of Electric Power and Protection Systems," Rev. 3, April 1995
15	RG 1.128, "Installation Design and Installation of Vented Lead-Acid~~Large Lead~~ Storage Batteries for Nuclear Power Plants," Rev. 2, February 2007
16	RG 1.136, "Design Limits, Loading Combinations, Materials, Construction, and Testing of Concrete Containments," Rev. 3, March 2007
17	RG 1.140, "Design, Inspection and Testing Criteria for Air Filtration and Adsorption Units of Normal ~~Ventilation~~ Atmosphere Cleanup Systems in Light-Water-Cooled Nuclear Power Plants," Rev. 2, June 2001
18	RG 1.206, "Combined License Applications for Nuclear Power Plants" (LWR Edition), June 2007
19	Regulatory Guide 1.163, "Performance-Based Containment Leak-Test Program," September 1995

Table 14.2-2 Regulatory Guides Associated with the ITP (Sheet 2 of 2)

20	RG 1.45, "~~Reactor Coolant Pressure Boundary Leakage Detection Systems~~Guidance on Monitoring and Responding to Reactor Coolant System Leakage," Rev.1, May 2008
21	RG 1.196, "Control Room Habitability at Light-Water Nuclear Power Reactors," Rev. 1, January 2007
22	RG 1.35, "Inservice Inspection Of Ungrouted Tendons In Prestressed Concrete Containments," Rev 3, July 1990
23	RG 1.35.1, "Determining Prestressing Forces For Inspection Of Prestressed Concrete Containments," July 1990

Chapter 19

US-APWR DCD Chapter 19 Rev. 2, Tracking Report Rev. 6 Change List

Page	Location (e.g., subsection with paragraph/sentence/ item ,table with column/row, or figure)	Description of Change
19.1-111	19.1.5.1 PRA assumption	RAI #649 19-485 Insert a new assumption “p”.
19.1-117 to 19.1-118	19.1.5.3.2 The second paragraph after the description of scenario FA2-415-01	RAI #649 19-489 Modified the descriptions related to the T/B design features and sensitivity study, “Separation of the electrical rooms …effective in reducing flooding risk.”
19.1-118 to 19.1-119	19.1.5.3.2 The fourth paragraph after the description of scenario FA2-415-01	RAI #649 19-491 Inserted the three paragraphs regarding sensitivity analysis as follows: “The pipe rupture frequencies for … would be effective in reducing flood risk.”
19.1-119	19.1.5.3.2 The third sentence of the seventh paragraph after the description of scenario FA2-415-01	RAI #649 19-490 Modified the description regarding uncertainty analysis from “Uncertainties in the evaluation … a critical flood volume.” to “Flooding isolation is … a critical flood volume.”
19.2-23 to 19.2-26	19.2.3.3.7 Discussions in the Analysis result part	RAI #635 06.02.05-39 Revise the equipment survivability discussion for (1) containment penetration and (3) depressurization valve.
19.2-31 to 19.2-33	19.2.4.1	RAI #635 06.02.05-40 Revise the containment structural evaluation in accordance with the RAI answer.
19.2-52	19.2.7	RAI #635 06.02.05-40 Add new reference 19.2-70.

k. East side and west side of reactor building (R/B) are physically separated by flood propagation preventive equipments such as water tight doors. Therefore, flood propagation between east side and west side in the reactor building is not considered

l. Drain systems are designed to compensate with flood having flow rate below 100 gpm. Flood with flow rate below 100 gpm will not propagate to other areas due to the drain systems

m. Watertight doors are provided for the boundaries between R/B and A/B in the bottom floor and between R/B and T/B in flood area 1F so that this measure prevents flood propagation from non-safety building to R/B

n. Flooding from the ESW system is assumed to be isolated within 15 minutes. If the isolation is failed, flood water released from the ESWS is assumed to be propagated to other areas (including areas in the upper floors) in the east side (or west side) non-restricted area in the R/B. Flooding from the ESW system is assumed to be detectable using the leak detectors. The probability of ESWS flood without isolation within 15 minutes is judged to be very small, considering the flood frequency and failure probability of the leak detectors. The procedures would be provided by the time of fuel loading

o. Four trains of ESWS have physical separations and flooding in one train does not propagate to other trains

p. A water leak in the break room that adjoins the MCR would be isolated immediately by the operators in the MCR.

Flood areas are provided in the same way as fire areas because of the following characteristics of the US-APWR.

- Fire areas are divided in fire zones which are divided by walls. Boundaries of fire areas consist of fire walls which maintain integrity for three hours. The walls are also effective to mitigate the effects of sprays.

- Fire protection seals for penetrations or fire protection doors are effective to mitigate the impact of flood.

Large circulating water system leaks due to pipe failures are indicated in the control room by a loss of vacuum in the condenser shell and water level in the sump. Water from a system rupture will run out of the building through a relief panel in the T/B wall before the level can raise high enough to cause damage. Site grading will carry the water away from safety-related buildings.

The SSCs in the flood areas are identified from internal events PRA models. Equipment location is gathered from several sources: general arrangement drawings, US-APWR internal and fire PRA databases, and clarification discussions with design engineers. SSCs, such as manual valves, check valves, safety valves, orifices, and tanks have been excluded because those SSCs would not be affected by flooding.

Flood due to the rupture of piping on the 4F of R/B east side steam generator blowdown water radiation monitor room causes loss of function of both A and B trains of component cooling water pumps, essential chillers, and batteries, by the effect of flood propagation. Also B-EFW pump (M/D) loses function. This scenario causes partial loss of component cooling water systems. Simultaneous operator failure to open the valve of EFW pit discharge cross tie line, random failure of one EFW pump and operator failure for feed and bleed operation result in core damage. This scenario is dominant contributor of CDF (3.7E-08/RY) and LRF (2.0E-08/RY).

[FA2-501-01]

Flood due to the rupture of piping on the 4F of R/B east side corridor causes loss of function of both A and B trains of component cooling water pumps, essential chillers, and batteries, by the effect of flood propagation. Also B-EFW pump (M/D) loses function. This scenario causes partial loss of component cooling water systems. Simultaneous operator failure to open the valve of EFW pit discharge cross tie line, random failure of one EFW pump and operator failure for feed and bleed operation result in core damage. This scenario is dominant contributor of CDF (3.7E-08/RY) and LRF (1.9E-08/RY).

[FA2-415-01]

Spray due to the leak from piping in the west side main steam line piping room on the 3F of R/B causes secondary line break. This scenario assumed plant shutdown by operators. Simultaneously operators fail to open the valve of EFW pit discharge cross tie line. Also operators fail to feed and bleed operation. This scenario is dominant contributor of CDF (3.3E-08/RY).

Risk significant scenarios involve major flooding due to the ruptures of piping at R/B west side or east side non restricted areas. R/B contains safety related components. Major flood causes partial (east side or west side) failures of many components, such as CCW pumps and EFW pumps, due to submerge rapidly. Dominant cutsets are shown in Table 19.1-70. Fussell-Vesely importance and risk achievement worth are shown in Table 19.1-71 and Table 19.1-72 respectively. Importance of common cause failures, human errors and hardware failure are shown in Table 19.1-73 through 19.1-78. Significant SSCs are EFWS, feed & bleed operation using high head injection system and SDVs. Key initiating events are partial loss of CCWS. CCW pumps are located in B1F and are affected by major floods. Key SSCs for internal flood are CCWS and mitigation systems for the partial loss of CCWS such as EFWS and feed and bleed operations.

~~US-APWR designs to prevent electrical equipment rooms from the flooding and fire such as separation of the electrical rooms on the first floor and the second floor of the T/B. Those reduced risk from loss of offsite power caused by flood in the T/B. If the measures against the flooding for electrical room of T/B have not been done, it is difficult to switchover to alternate gas turbine generators for power supply to class 1E buses when all emergency gas turbine generators failed. As a sensitivity study, a loss of offsite power due to the flooding in the T/B is assumed. If these measures have not done and~~

~~a loss of offsite power with all four class 1E gas turbine generators failure occurred, the CDF and LRF of this scenario are 1.1E-06/RY and 3.1E-08/RY, respectively. These measures are effective to reduce flooding risk.~~Separation of the electrical rooms on the first floor and the second floor of the T/B is provided so that the electrical rooms will not be affected by a single flood or fire. This design feature reduces the risk from loss of offsite power caused by flooding in the T/B. To assess the risk benefit of this design feature, sensitivity analysis assuming that a flood in the T/B will result in loss of offsite power was performed. If the electrical room of the T/B is not separated into different flooding zones, flooding in the T/B followed by failure of all Class 1E gas turbine generators will result in a station blackout. The CDF and LRF of this scenario are 1.1E-06/RY and 3.1E-08/RY, respectively. The total CDF from other flood scenarios is approximately the same as that for the base case flooding scenario (CDF of 1.4E-6/RY); however, if the loss of offsite power scenario is included, the total flooding CDF will increase to 2.4E-06/RY. This result shows that this design feature is effective in reducing flooding risk.

US-APWR sets several water tight doors to prevent the propagation of floods. As a bounding sensitivity study, assumed all water barrier doors except the controlled barriers such as R/B separations between east side and west side and high energy compartments are invalid. The CDF and LRF of this bounding study are 2.6E-06/RY and 6.1E-07/RY, respectively. Although the several local watertight doors opened, the increasing of risk is not significant.

The pipe rupture frequencies for internal flooding PRA used for the base case are based on EPRI-TR-1013141 Revision1 Table 6-1. As a sensitivity analysis, case 7a in the Table 4-27of the EPRI report and corresponding inspection effectiveness factor are assumed in evaluating the pipe rupture frequencies. The A-EFW pump (T/D) room (FA2-102-01) pipes and D-EFW pump (T/D) room (FA2-108-01) pipes which contributed to CDF (CDF is greater than 1.0E-08/RY) are selected as a subject for this sensitive study. The total internal flooding CDF and LRF are 1.1E-06/RY and 2.3E-06/RY, respectively. This result shows that a development of an adequate inspection program would be effective in reducing flood risk.

A flooding propagation to the MCR is not considered in the base case. A sensitivity study was performed to identify the effectiveness of mitigation actions in the MCR and the RSC in the case of flood propagation to the MCR. The CDF and LRF resulting from this sensitivity study scenario are 2.4E-12/RY and 5.3E-13/RY, respectively. This result shows that an adequate operator action in the MCR and RSC is effective in reducing the internal flooding risk even though the MCR is not protected from flooding.

A significant contributor for flooding risk is the failure of switching over from the EFW pit to the intact emergency feed water trains. This is because each EFW pit has a water source of 50% to perform cold shutdown. This sensitivity study is selected to determine the sensitivity of the estimated risk if such an action is not required. If each EFW pit has water source of 100%, the switching over of the EFW pit is not needed in the case of severe flooding events. The total CDF and LRF resulting from this sensitivity study are reduced

to 2.5E-07/RY and 1.4E-07/RY, respectively. This result shows that this operator action is sensitive for internal flooding and a development of an adequate plant-specific procedure would be effective in reducing flood risk.

Assessment of uncertainties of the internal flood PRA model accounts for uncertainty in initiating events. Table A-13 through Table A-52 of EPRI 1013141 [Reference 19.1-40] addresses uncertainties in pipe failure rates. ~~Uncertainties in the evaluation of different flood isolation strategies implicitly involve accounting for uncertainties in spill rate distributions, and the time to reach a critical flood volume.~~Flooding isolation is not credited in the flooding assessment except for a flood in the break room adjacent to the MCR. Accordingly, the flooding assessment bounds uncertainties due to flooding isolation, spill rate distributions, and the time to reach a critical flood volume. Uncertainty is calculated using a Monte Carlo process.

The plant CDF uncertainty range is found to be 4.1E-06/RY - 2.3E-07/RY for the 95% to 5% interval. This uncertainty calculation is considered 95% contribute scenarios of CDF.

- 95th percentile 4.1E-06/RY
- Mean 1.3E-06/RY
- Median 8.1E-07/RY
- 5th percentile 2.3E-07/RY

The plant LRF uncertainty range is found to be 6.4E-07/RY - 5.2E-08/RY for the 95% to 5% interval. This uncertainty calculation is considered about 90% contribute scenarios of LRF.

- 95th percentile 6.4E-07/RY
- Mean 2.4E-07/RY
- Median 1.8E-07/RY
- 5th percentile 5.2E-08/RY

The most significant rooms to internal flood risk are the turbine driven (T/D) emergency feedwater pump rooms (FA2-102-01 and FA2-108-01) which are installed in water tight areas. If a large internal flood occurs in a room, the flood water is assumed to propagate to other areas on the R/B east or west side and cause failure of two safety-related systems. In the other rooms, T/D pumps are available because the rooms are protected by water-tight doors. Main steam and feedwater piping rooms (FA2-102-01 and FA2-108-01) are also significant rooms to internal flood risk. The internal flooding

- The significance of evaluations, i.e. if the system is backed up by alternative measure, etc.

The selected systems and components include containment penetrations, hydrogen igniters, depressurization valves used for severe accident mitigation, and containment pressure (wide range).

Systems / Components	Timeframe required to be functional
(1) Containment penetration	After core damage
(2) Hydrogen igniter	After core damage
(3) Depressurization valve	After core damage till reactor vessel failure
(4) Containment pressure (wide range)	After core damage

An environmental condition under hydrogen burning by hydrogen ignition system operation has been evaluated using GOTHIC code. Detailed evaluation results are described in Section 15.7 of the PRA technical report "US-APWR Probabilistic Risk Assessment" (Reference 19.2-15). The environmental conditions above four systems/components must satisfy are following.

(1) Containment penetration

Based on the following screening evaluation, the containment penetrations that are subject to the equipment survivability study under the hydrogen burn condition can be limited to the electrical penetrations that provide power to the hydrogen igniters and the depressurization valves,.

There are two major functions provided by containment penetrations; (1) provide the continuity of in-line, process flow paths between inside and outside containment across the containment boundary; and (2) maintain containment integrity at the location of the penetration. There are two basic types of containment penetrations; one for mechanical processes and one for electrical processes.

MHI has evaluated the environmental conditions created by a local hydrogen burn. The results indicate that the pressure rise is not expected to be significant. In general, the peak pressure has been determined to top-out below the containment design pressure of 68 psig. On the other hand, the local temperature rise is significant and in some locations the temperature rise could be as much as 1000°F. A high ambient temperature may not impact the containment integrity function at the penetration, but could impact the in-line process flow path function, especially for electrical penetrations.

Mechanical containment penetrations are robust by nature because they are made from heavy gauge metal, are firmly welded to the containment liner and can withstand excessive temperatures and pressures. Electrical containment penetrations are also robust in terms of containment integrity, but must be evaluated in terms of the SA survivability requirement for the in-line process flow path function, i.e., electrical current.

It is important to identify which electrical circuits that penetrate containment and have functions that are fundamental to establish and maintain safe shutdown and containment structural integrity. Two circuits have been identified that serve components or systems with these functions; the circuits to the hydrogen igniters and the depressurization valves. As a result, the electrical penetrations which provide power to the hydrogen igniters and the depressurization valves are subject to the survivability study.

The highest temperature reached at the location of these electrical penetrations is evaluated to be less than 400°F, and the steady-state temperature is evaluated at about 200°F. The containment design temperature is 300°F. The highest pressure reached at the location of these electrical penetrations is evaluated to be approximately 50 psig, which is lower than the containment design pressure of 68 psig. The amount of hydrogen burned in this analysis is conservatively assumed to be 100% of the active fuel length cladding reaction. Hence, this analysis is conservative and brackets the various uncertainties involved in the hydrogen generation and burn calculation.

Based on the evaluation above, the environmental conditions that the electrical containment penetration must survive while maintaining containment integrity and supplying electricity to the circuits for the hydrogen igniters and depressurization valves are the containment design pressure of 68 psig and design temperature of 300°F for 24 hours, including consideration for an instantaneous temperature rise of 400°F due to a hydrogen burn.

~~The containment penetration to be important during severe accident is the electrical penetration which provides power to the hydrogen igniters. Mechanical penetrations are made by steel and tightly welded with the containment body. It has very strong robustness against temperature and pressure in nature. The containment penetrations considered in the equipment survivability study are therefore limited to the specific electrical penetration which is utilized as power supply to hydrogen igniters. Other electrical and mechanical penetrations are eliminated from the scope of this study.~~

~~The highest temperature where the considered electrical penetration exists is evaluated as slightly lower than 400°F and the steady-state temperature is around 200°F, which is lower than the containment design temperature of 300°F. The highest pressure is evaluated approximately 50 psig, which is lower than the containment design pressure of 68 psig. The amount of hydrogen burnt in this analysis is conservatively assumed to be 100% active fuel length cladding reaction, hence this analysis widely covers various uncertainties involved in the hydrogen generation and burn.~~

~~Considering the above findings, the environmental condition required for the electrical penetration is determined that it must maintain its functions to supply power to hydrogen igniters and to maintain the leak-tightness for greater than 24 hours under the containment design pressure of 68psig and the design temperature of 300°F, with considering the instantaneous temperature rise due to hydrogen burn with its peak temperature to be as high as 400°F.~~

(2) Hydrogen igniter

The hydrogen igniters can perform its function during and after exposure to the environmental conditions created by hydrogen burn. Through the equipment

survivability study, it is evaluated that the peak temperature of containment atmosphere becomes as high as approximately 1200°F, and the temperature rise from 400°F and reduced back to 400°F due to hydrogen burn takes approximately 10 minutes. The amount of hydrogen burnt in this analysis is conservatively assumed to be 100% active fuel length cladding reaction, hence this analysis broadly covers various uncertainties involved in the hydrogen generation and burn.

Therefore, in terms of the equipment survivability, it is required that the hydrogen ignition system must keep its function longer than 10 minutes under the condition of containment atmosphere with higher than 400°F and its peak temperature to be as high as 1200°F.

(3) Depressurization valve

Severe accident scenarios have been further evaluated in the equipment survivability study to determine when and under what conditions the functioning of the depressurization valve (DV) is considered necessary to establish and maintain safe shutdown and containment structural integrity. LOCA scenarios are eliminated because the initiating event depressurizes the RCS, and only transient scenarios resulting in high RCS pressure need be considered. Accordingly, it is concluded that the hydrogen burn condition does not directly affect DV function, which is to depressurize RCS after the core is significantly damaged. Potential hydrogen release paths from RCS during transient events include a pathway via the pressurizer relief tank (PRT), the failure of the RCPB, or the opening of the DV. The hydrogen release from the PRT and the associated hydrogen burn has a negligible effect on the DV, since the compartment where the PRT is located is apart from the location where the DV is located. Therefore, a hydrogen burn in the PRT compartment has very little influence on the functionality of the DV. Hydrogen release from a failure of the RCPB and the associated hydrogen burn may impact the functionality of the DV. However, the RCPB release simultaneously depressurizes the RCS, and hence the DV is not required for these accident scenarios. Hydrogen release via the opening of the DV and the associated hydrogen burn has the most significant impact on the functionality of the DV. Because a large amount of hydrogen is released via the opening of the DV, the atmosphere surrounding the DV becomes hydrogen-rich. This hydrogen is burned by the hydrogen igniters located near the DV. In such cases, the DV may encounter severe environmental conditions created by the hydrogen burn. However, after the DV is opened and hydrogen is released to the containment, the DV is not required to function. The DV is only operated under severe accident conditions, in which the core has already been significantly damaged. Under such situations, the capability to close the DV is not required.

Considering the discussion above, the function of the DV to open is not adversely affected by hydrogen burns from the hydrogen released by the PRT or the RCPB. The function of the DV to open is not adversely affected by the hydrogen burn from the hydrogen released by the DV since the function to open has already been fulfilled and the DV is open.

~~The severe accident scenarios have been further evaluated in the equipment survivability study, when and what conditions the depressurization valve (DV) is considered significant to establish and maintain safe shutdown and containment structural integrity. LOCA scenario is eliminated in nature, and only transient scenarios with high RCS pressure are~~

~~in the focus. Accordingly, it has been concluded that the hydrogen burning condition does not directly affect the functionality of DV, which is to depressurize RCS after core is significantly damaged. This is because the condition of hydrogen-burn is resulted from the DV opening operation. DV is utilized to reduce the RCS pressure, i.e. if DV is not opened, hydrogen is not released to containment atmosphere. After DV is opened and hydrogen is released to the containment, DV is not necessary to work anymore. DV is only operated under severe accident conditions, in which core has already been significantly damaged. Under such situation, closing operation may not be significant and can be negligible.~~

~~Considering above insight, DV is not subject to hydrogen burning condition.~~

(4) Containment pressure (wide range)

The highest temperature where the containment pressure (wide range) exists is evaluated slightly below 800°F and the temperature rise from 400°F and reduced back to 400°F due to hydrogen burn takes approximately 2 minutes. The highest pressure evaluated from this study is approximately 50 psig, which is lower than the containment design pressure of 68 psig. The amount of hydrogen burnt in this analysis is conservatively assumed to be 100% active fuel length cladding reaction, hence this analysis widely covers various uncertainties involved in the hydrogen generation and burn.

Considering the above findings, the environmental condition required for the containment pressure (wide range) is determined that it must maintain its functions for longer than 2minutes under 400°F atmosphere, with considering the instantaneous temperature rise due to hydrogen burn with its peak temperature to be as high as 800°F.

These specific environmental conditions obtained from the equipment survivability study are addressed for the type test or analyses of these systems and components. It will be confirmed through the type test or analyses that the systems and components in the US-APWR design are able to maintain safe shutdown and containment structural integrity with high confidence and to keep their functions under the postulated severe accident environmental conditions created by hydrogen burning. These system design specifications will be appropriately carried forward in procurement documents.

Existing experiments and the literatures (References 19.2-11, 19.2-12, and 19.2-13) are also appropriately referred to evaluate the US-APWR equipment survivability.

19.2.3.3.8 Long-term Containment Overpressure

The US-APWR containment is cooled and depressurized primarily by the CSS during a postulated severe accident. The CSS which supplies coolant water from the RWSP is automatically activated upon detecting high-high containment pressure. Accordingly, the containment pressure is limited to less than the design pressure during a severe accident. In case the CSS is not functional, the US-APWR provides diverse mitigation features against challenges by containment overpressure. One is the alternate containment cooling by containment fan cooler system. This is a system to depressurize containment by promoting natural circulation in containment. The containment fan cooler system is a system provided to stabilize the containment

The ultimate pressure is predicted by summation of each multiplication of the cross sectional area and yielding stress of rebar, tendon, and liner plate. It is considered a very conservative assumption to apply the yielding stress of each material to predict ultimate pressure. In terms of the material property of carbon steel, there is no significant deterioration on strength for temperatures around 400°F~600°F. It is therefore a conservative assumption even though the temperature dependency is neglected. In addition, tendon and rebar are embedded in concrete and thus not influenced greatly by the surrounding temperature due to lower thermal conductivity of concrete. These considerations indicate that the ultimate pressure is 216 psia (201 psig).

According to RG 1.136 (Reference 19.2-14), it is necessary to evaluate that the containment maintains integrity to the following load:

D + Pg1 + ~~[~~Pg2~~ or Pg3]~~ where

D = Dead load

Pg1 = Pressure resulting from an accident that releases hydrogen generated from 100% fuel clad metal-water reaction

Pg2 = Pressure resulting from uncontrolled hydrogen burning

~~Pg3 = Pressure resulting from post-accident inerting, assuming carbon dioxide is the inerting agent~~

The allowable strain of the PCCV liner plate specified in ASME Article CC-3720 (Reference 19.2-70) for a Factored Load Condition is 3000μ, or 0.3%. The PCCV internal pressure which produces 0.3 % strain in the liner plate is calculated as follows.

The initial pre-stressing force applied to the US-APWR PCCV is equivalent to a minimum of 1.2 times the design pressure. Compressive strains are introduced to rebar and liner plate due to the pre-stressing force before pressurization.

Therefore, if internal pressure would be increased, strain of the rebar and liner plate will become 0 (zero) at the pressure of 1.2 times the design pressure. Then the internal pressure will increase further, tensile strains of the rebar, liner plate and tendons will increase.

The increase of internal pressure which will cause an increase in the strain of the rebar, liner plate and tendons equal to 0.3% is calculated below. All calculation is performed at the mid-height of the PCCV cylinder in the hoop stress direction, which should be critical for internal pressure.

1. Basic Conditions

   1) PCCV Design Pressure
      Pd = 68 psig

   2) Internal Pressure at the Factored Load
      D + Pg1 + Pg2 = 177.1 psia = 162.4 psig

   3) PCCV Inside Radius
      R = 895 inch

4) Material Properties (Reference 19.2-70)
(Tendon : ASTM A416 Grade 1860 #15)

Modulus of elasticity	Et = 28,000 ksi
Sectional area per unit height	At = 0.5907 in^2/in
Yield strength	σyt = 243,000 psi

(Rebar : ASTM A615 Gr. 60)

Modulus of elasticity	Er = 29,000 ksi
Sectional area per unit height	Ar = 0.5 in^2/in
Yield strength	σyr = 60,000 psi
Yield strain	Єyr = σyr / Er = 0.207 %

(Liner plate : ASTM A516 Gr. 60)

Modulus of elasticity	El = 29,000 ksi
Sectional area per unit height	Al = 0.25 in^2/in
Yield strength	σyl = 27,300 psi
Yield strain	Єyl =σyl / El = 0.094 %

2. Calculation of the Internal Pressure which produces 0.3 % Strain in the Liner Plate

1) Calculation of the increase of internal pressure which will cause increase of the strain of the rebar, liner plate and tendons equal to 0.3%

Because 0.3% strain exceeds yield strains of the rebar and liner plate, they are assumed to be yielded. The increase of sustained force per unit height by the tendon, rebar and liner plate (dNt, dNr and dNl) equivalent to the increase of their strains equal to 0.3% are:

Tendon	dNt = 0.003 × Et × At = 49,619 p/in
Rebar	dNr = σyr × Ar = 30,000 p/in
Liner	dNl = σyl × Al = 6,825 p/in

The increase of internal pressure, which causes the increase of the above forces (dP) is:

$$dP = (dNt + dNr + dNt) / R = 96.59 \text{ psig}$$

2) Internal pressure, which produces 0.3 % strain in the liner plate

The internal pressure which produces 0.3 % strain in the liner plate (P) is:

$$P = 1.2 \times Pd + dP = 178.19 \text{ psig}$$

The internal pressure P=178.19 psig, which produces 0.3 % strain in the liner plate is greater than the internal pressure D + Pg1 + Pg2 = 162.4 psig at the Factored Load. This means that the strain due to the pressure at the hydrogen burn is below the allowable limit of ASME CC-3720 (Reference 19.2-70).~~For the US-APWR containment~~

~~design, the horizontal stress caused by D is calculated based on the global finite element model of PCCV and the maximum value of horizontal compressive stress 57.7 psi occurs at the point fixed to basemat. This stress is converted as the equivalent internal pressure as follows,~~

~~P_D = 57.7 (psi) × t / Din = 3.4 (psi)~~

~~P_D = Equivalent internal pressure converted from the stress caused by D~~
~~t = Wall thickness of PCCV (4" - 4')~~
~~Din = Inner radius of PCCV (74" - 7)~~

~~Pressure related to hydrogen generation and control is evaluated in the US-APWR PRA report (Reference 19.2-15). Referred to the PRA report, Pg1 and Pg2 are evaluated as 46.7 psia and 127 psia, respectively. The US-APWR design does not adopt post-accident inerting as the hydrogen control, and hence Pg3 is ignored.~~

~~Containment pressure due to hydrogen generation and control can be evaluated as:~~

~~Before uncontrolled burn: D + Pg1 = P_D+ Pg1 = 50.1 pisa~~

~~After uncontrolled burn: D + Pg2 = P_D+ Pg2 = 130.4 pisa~~

~~These loads are less than the containment ultimate pressure of 216 psia. Accordingly it is confirmed that containment structural integrity is maintained from the challenge caused by hydrogen generation and control.~~

19.2.4.2 Review of the Containment Performance Goal

Discussions on the containment performance goals are identified in SECY-90-016 (Reference 19.2-2) and SECY-93-087 (Reference 19.2-3). The staff's recommendations on the containment performance goals in these documents have been approved by the commission in the associated SRMs. The staff's recommendations are interpreted in the latest standard review plan as "a deterministic goal that containment integrity be maintained for approximately 24 hours following the onset of core damage for the more likely severe accident challenges, and a probabilistic goal that the conditional containment failure probability be less than approximately 0.1 for the composite of all core damage sequences associated in the PRA."

Regarding the deterministic goal, it is carefully examined in Subsection 19.2.3, severe accident mitigation, in accordance with the conservatively estimated ultimate capability, 216 psia (201 psig), obtained in the above section. Specifically in Subsection 19.2.3.3, severe accident issues on hydrogen combustion, core debris coolability, MCCI, steam explosion, DCH, and long-tem decay heat removal are discussed focusing on challenges to the containment integrity. It is confirmed through the analyses that the containment integrity is maintained for more than 24 hours following the onset of core damage for all the severe accident conditions listed above. These severe accident issues fully cover the discussions identified in SECY-90-016 and SECY-93-087. Accordingly the deterministic goal suggested by the staff is sufficiently met for the current US-APWR severe accident mitigation design.

19.2-65 M.F. Hessheimer, et al., Containment Integrity Research at Sandia National Laboratories, NUREG/CR-6906, U.S. Nuclear Regulatory Commission, Washington, July 2006.

19.2-66 C.V. Subramanian, Integrity of Containment Penetrations under Severe Accident Conditions, NUREG/CR-4119, U.S. Nuclear Regulatory Commission, Washington, June 1985.

19.2-67 S. Sharma, et al., Ultimate Pressure Capacity of Reinforced and Prestressed Concrete Containments, NUREG/CR-4149, U.S. Nuclear Regulatory Commission, Washington, May 1985.

19.2-68 R.A. Dameron, et al., Posttest Analysis of the NUPEC/NRC 1:4 Scale Prestressed Concrete Containment Vessel Model, NUREG/CR-6809, U.S. Nuclear Regulatory Commission, Washington, March 2003.

19.2-69 M.F. Hessheimer, et al., Overpressurization Test of a 1:4-Scale Prestressed Concrete Containment Vessel Model, NUREG/CR-6810, U.S. Nuclear Regulatory Commission, Washington, March 2003.

19.2-70 Rules for Construction of Nuclear Facility Components, Division 2, Concrete Containments. Section III, American Society of Mechanical Engineers, 2001 Edition through the 2003 Addenda.

Appendix-1
Provisional Mark-Up of Conceptual Design Information (CDI)

1-1 PSFSV, ESWPT & UHSRS
1-2 Electric
1-3 ESWS & UHS
1-4 PSWS
1-5 CWS
1-6 SGBDS

1-1 PSFSV, ESWPT & UHSRS

Page	Location (e.g., subsection with paragraph/ sentence/ item, table with row/column, or figure)	Description of Change
1.2-50	Section 1.2.1.7.2.3	Change: Delete “underground” in description of Power Source Fuel Storage Vault (PSFSV). Reason: Location of PSFSV depends on site condition and typical description of location is not necessary in DCD..
1.2-50	Section 1.2.1.7.2.4	Change: Delete “underground” in description of Essential Service Water System (ESWS). Reason: Location of ESWS depends on site condition and typical description of location is not necessary in DCD..
1.2-52	Figure 1.2-1	Change: Add indication for CDI with cloud shape and note. Reason: Design and location of buildings and structures of Access Building, Auxiliary Building, Reactor Building, Turbine Building and Power Source Building is standard design. CDI detailed in Section 1.8 for the other buildings, structures, and components or the portions and features of the SSCs is site specific.
1.2-53	Figure 1.2-2	Change: Add indication for CDI with cloud shape on ESWPT and note. Reason: Design and location of ESWPT is site specific.
1.2-63	Figure 1.2-12	Change: Add indication for CDI with cloud shape on ESWPT and note. Reason: Design and location of ESWPT is site specific.
3.8-47	Section 3.8.4.1.3	Change: Delete “underground” in description of ESWPT and PSFSV. Reason: Location of ESWPT and PSFSV depends on site condition and typical description of location is not necessary in DCD..
3.8-47	Section 3.8.4.1.3	Change: Delete “underground” in description of ESWPT and PSFSV. Reason: Location of ESWPT and PSFSV depends on site condition and typical description of location is not necessary in DCD..

Page	Location (e.g., subsection with paragraph/ sentence/ item, table with row/column, or figure)	Description of Change
		and the UHS basin.”. Reason: Design of components in UHSRS are site specific.
8.3-23	Section 8.3.1.1.3.9	Change: Delete “underground” in description of fuel oil storage tank (PSFSV). Reason: Location of fuel oil storage tank (PSFSV) depends on site condition and typical description of location is not necessary in DCD.. Change: “building” to “PS/B”. Reason: Describe apparently that fuel oil storage tank (PSFSV) will be located out side PS/B.
8.3-135	Figure 8.3.1-4	Change: Add indication for CDI with cloud shape on ESWPT and note. Reason: Design and location of ESWPT is site specific.
9.2-13	Section 9.2.1.3	Change: Delete “either underground or in the pump house and the R/B” in description of ESWS equipment and piping in R/B, UHSRS, ESWPT and PS/B. Reason: Location of ESWS equipment and piping in UHSRS and ESWPT depends on site condition and typical description of location is not necessary in DCD..
9.5-9	Section 9.5.1.2.1	Change: Delete “and is below grade” in description of fuel oil storage tank (PSFSV). Reason: Location of fuel oil storage tank (PSFSV) depends on site condition and typical description of location is not necessary in DCD..
9.5-33	Section 9.5.4.2.1	Change: Delete “underground” in description of fuel oil storage tank (PSFSV). Reason: Location of fuel oil storage tank (PSFSV) depends on site condition and typical description of location is not necessary in DCD..
9.5-34-35	Section 9.5.4.2.2	Change: Delete “located at grade elevation” in description of fuel oil storage tank (PSFSV). Reason: Location of fuel oil storage tank (PSFSV) depends on site condition and typical description of location is not necessary in DCD.. Change: Delete “, and the vent connection is located above the grade elevation” in description of vest system

Page	Location (e.g., subsection with paragraph/ sentence/ item, table with row/column, or figure)	Description of Change
		Change: Delete “, and the vent connection is located above the grade elevation” in description of vest system of fuel oil storage tank (PSFSV). Reason: Location of fuel oil storage tank (PSFSV) depends on site condition and typical description of location is not necessary in DCD.. Change: Delete “underground” in description of fuel oil storage tank (PSFSV). Reason: Location of fuel oil storage tank (PSFSV) depends on site condition and typical description of location is not necessary in DCD.. Change: Delete the sentences of “The PSFSV is 33 feet underground. This provides a natural insulation and a constant ground temperature below grade that maintains the vault temperature within the required temperature limits for the fuel oil.” in description of fuel oil storage tank (PSFSV). Reason: Design and location of fuel oil storage tank (PSFSV) depends on site condition and typical description of location is not necessary in DCD.. Change: “tunnel” to “concrete pipe chase” in description of piping of fuel oil storage tank (PSFSV). Reason: Make the description of piping tunnel general.
9.5-37-38	Section 9.5.4.3	Change: Delete “underground” in description of fuel oil storage tank (PSFSV). Reason: Location of fuel oil storage tank (PSFSV) depends on site condition and typical description of location is not necessary in DCD.. Change: Delete “located at grade elevation” in description of fill and sample connection around fuel oil storage tank (PSFSV). Reason: Location of fuel oil storage tank (PSFSV) and relative structure depends on site condition and typical description of location is not necessary in DCD.. Change: “isolation valves" to “with isolation valves” Reason: Editorial change Change: “tunnel” to “concrete pipe chase” in description of piping of fuel oil storage tank (PSFSV).

Page	Location (e.g., subsection with paragraph/ sentence/ item, table with row/column, or figure)	Description of Change
		Reason: Make the description of piping tunnel general. Change: “underground tunnel” to “concrete pipe chase” in description of piping of fuel oil storage tank (PSFSV). Reason: Location of fuel oil tunnel is site specific and make the description of piping tunnel general.
9A-642	Figure 9A-27	Change: Add indication for CDI with cloud shape and note. Reason: Design and location of buildings and structures of Access Building, Auxiliary Building, Reactor Building, Turbine Building and Power Source Building is standard design. CDI detailed in Section 1.8 for the other buildings, structures, and components or the portions and features of the SSCs is site specific.
11.5-36	Figure 11.5.2a	Change: Add indication for CDI with cloud shape on ESWPT and note. Reason: Design and location of ESWPT is site specific.
11.5-46	Figure 11.5.2k	Change: Add indication for CDI with cloud shape on ESWPT and note. Reason: Design and location of ESWPT is site specific.
12.3-117	Figure 12.3-1	Change: Add indication for CDI with cloud shape and note. Reason: Design and location of buildings and structures of Access Building, Auxiliary Building, Reactor Building, Turbine Building and Power Source Building is standard design. CDI detailed in Section 1.8 for the other buildings, structures, and components or the portions and features of the SSCs is site specific.
12.3-151	Figure 12.3-2	Change: Add indication for CDI with cloud shape on ESWPT and note. Reason: Design and location of ESWPT is site specific.
12.3-161	Figure 12.3-3	Change: Add indication for CDI with cloud shape on ESWPT and note. Reason: Design and location of ESWPT is site specific.
12.3-171	Figure 12.3-4	Change: Add indication for CDI with cloud shape on

Page	Location (e.g., subsection with paragraph/ sentence/ item, table with row/column, or figure)	Description of Change
		ESWPT and note. Reason: Design and location of ESWPT is site specific.
12.3-181	Figure 12.3-5	Change: Add indication for CDI with cloud shape on ESWPT and note. Reason: Design and location of ESWPT is site specific.
12.3-191	Figure 12.3-6	Change: Add indication for CDI with cloud shape on ESWPT and note. Reason: Design and location of ESWPT is site specific.
12.3-205	Figure 12.3-11	Change: Add indication for CDI with cloud shape on ESWPT and note. Reason: Design and location of ESWPT is site specific.
B 3.8.3-1	Section B 3.8.3	Change: Delete the sentence of “All outside tanks, pumps, and piping are located underground.” in description of fuel oil storage tank (PSFSV). Reason: Design and location of fuel oil storage tank (PSFSV) and relative components depend on site condition and typical description of location is not necessary in DCD.

Separation of Redundant Systems - Four redundant safety systems containing radioactive material are located in each zone of the four quadrants surrounding the containment structure. Each of the quadrant areas is separated by a physical barrier to assure that the functions of the safety-related systems are maintained in the event of postulated incidents such as fires, floods, and high-energy pipe break events. Nonradioactive safety systems such as EFWS, CCWS and electrical systems are located in the non-radioactive control area of R/B. This area is also separated into four divisions by physical barriers to assure that the functions of the safety-related systems are maintained in the event of postulated incidents such as fires, floods, and high-energy pipe break events.

1.2.1.7.2.2 Power Source Buildings (PS/B)

Two PS/Bs are arranged adjacent to the R/B. These buildings are freestanding on reinforced concrete mats, and each building contains two identical emergency power sources, which are separated from each other by physical barriers. The safety-related HVAC chillers are also located in these buildings. The electrical, I&C and HVAC equipment related to the EPSs are also contained in the PS/Bs.

1.2.1.7.2.3 Power Source Fuel Storage Vault (PSFSV)

The PSFSVs are ~~underground~~ structures constructed with reinforced concrete, and classified as seismic Category I. The vaults contain the fuel oil tanks of safety-related gas-turbine generators.

1.2.1.7.2.4 Essential Service Water Pipe Tunnel (ESWPT)

The ESWPT is a~~n underground~~ structure constructed with reinforced concrete, and is classified as seismic Category I. Terminating in part under the T/B, the structure is isolated from other structures to prevent any seismic interaction. The other termination point is located at the Ultimate Heat Sink Related Structure (UHSRS) that connects to the Ultimate Heat Sink (UHS) water.

1.2.1.7.2.5 Auxiliary Building (A/B)

The A/B is located adjacent to the R/B. The A/B contains the main components of the waste disposal systems and the non safety-related electrical area. The non safety-related electrical area is normally a non-radioactive zone and is completely separated from the radioactive zones of the A/B.

1.2.1.7.2.6 Access Building (AC/B)

The AC/B is located adjacent to the A/B. The AC/B houses the access control area, and the chemical sampling and laboratory area.

1.2.1.7.2.7 Turbine Building (T/B)

The T/B houses the non safety-related equipment of the T/G and its auxiliary systems, (main condenser, feedwater heaters, moisture separator reheaters, etc.). The T/B is

Security-Related Information – Withheld Under 10 CFR 2.390

(SRI)

Figure 1.2-1 Typical US-APWR Site Arrangement Plan

Security-Related Information – Withheld Under 10 CFR 2.390

Figure 1.2-2 Power Block at Elevation -26'-4" - Plan View

(SRI)

Security-Related Information – Withheld Under 10 CFR 2.390

Figure 1.2-12 Power Block Sectional View A-A (SRI)

systems are maintained in the event of postulated incidents such as fires, floods, and high energy pipe break events.

Non-radioactive safety systems such as the ESWS, CCWS and electrical system, etc., are located in the plant southern area of the R/B. This area is also separated into four divisions by a physical barrier to assure that the functions of the safety-related systems are maintained in the event of postulated incidents such as fires, floods, and high energy line break events.

3.8.4.1.2 PS/Bs

The east and west PS/Bs are arranged adjacent to the R/B; one to the east and one to the west. These buildings are free-standing on a reinforced concrete basemat. Each building contains two emergency power sources and one alternate power source which are separated from each other by a physical barrier. In addition, the safety-related chillers are also located in these buildings.

Details of the design and analysis of the east and west PS/Bs are provided in Subsection 3.8.4.4.

3.8.4.1.3 ESWPT, UHSRS, PSFSVs, and Other Site-Specific Structures

The ESWPT is a~~n underground~~ seismic category I structure constructed of reinforced concrete. Terminating in part under the T/B, the structure is isolated from other structures to prevent any seismic interaction. The other termination point is the UHSRS at the source of the ESWS. [[The UHSRS consist of a cooling tower enclosure, ESWS pump houses, and the UHS basin.]] The PSFSVs are ~~underground~~ structures which house the safety-related and non safety-related fuel oil tanks.

The design and analysis of the ESWPT, UHSRS, PSFSVs, and other site-specific structures are to be provided by the COL Applicant based on site-specific seismic criteria.

3.8.4.1.4 Heating, Ventilating and Air Conditioning Ducts and Duct Supports

Seismic category I HVAC ducts and duct supports are routed as necessary to supply safety-related functions of air distribution. Appendix 3A describes the qualification of HVAC ducts and duct supports.

3.8.4.1.5 Conduits and Conduit Supports

Seismic category I conduits and conduit supports are routed as necessary to supply safety-related Class-1E cable. The conduit consists of a metal wall of minimum thickness as specific, and is assembled using standard industry fittings and clips. Appendix 3F describes the qualification of conduits and conduit supports.

3.8.4.1.6 Cable Trays and Cable Tray Supports

Seismic category I cable trays and cable tray supports are routed as necessary to supply safety-related Class-1E cable. Cable trays are manufactured using thin-gauge steel channels, and supports are constructed using cold formed or rolled steel shapes. Appendix 3G describes the qualification of cable trays and cable tray supports.

returning the GTG to standby operation, and (2) automatically energizing the emergency loads with offsite power.

k. Demonstrate that the specified automatic trip signals for the GTG are bypassed automatically as designed.

l. Demonstrate that by starting and running (unloaded) redundant units simultaneously, common failure modes that may be undetected with single GTG testing do not occur.

The test procedures will specifically state that the Class 1E GTG unit is to be reset at the conclusion of the test to allow an automatic start when required.

8.3.1.1.3.9 Fuel Oil Storage and Transfer Systems

Each Class 1E GTG is provided with dedicated and independent fuel oil supply system, fuel oil day tank and ~~underground~~ storage tank. The fuel oil systems are not shared between the GTGs of redundant groups and these systems are designed to minimize common cause failure between the GTGs of redundant groups.

The day tank capacity is adequate for 1.5 hours of operation Class 1E GTG at maximum required loading.

The maximum expected loading for Class 1E GTG occurs under LOOP+LOCA conditions. The electrical power and control circuit power supplies for the Class 1E fuel oil system are provided from the Class 1E power systems in the same train.

The day tank is located inside the associated Class 1E GTG room in the PS/B. The fuel level in the day tank is maintained automatically by the fuel transfer pumps pumping the fuel from the storage tanks on day tank low level. Each day tank is provided with two fuel transfer pumps.

The storage tank capacity is adequate to meet the maximum load demand on the associated Class 1E GTG for 7 days. One independent and dedicated storage tank is provided for each Class 1E GTG. The ~~underground~~ storage tanks are located outside of the ~~building~~PS/B.

The Class 1E GTG fuel oil system is described in Subsection 9.5.4.

8.3.1.1.3.10 Cooling Water Systems

The GTG does not need cooling water system.

8.3.1.1.3.11 Instrumentation and Control Systems

Equipment is provided for the following operations:

- Manual starting and stopping.
- Manual and automatic synchronization.
- Manual frequency and voltage setting.

Security-Related Information – Withheld Under 10 CFR 2.390

Figure 8.3.1-4 Class 1E electrical equipment layout (Sheet 1 of 5)

EL. - 26’ - 4”

- Section 3.7, Seismic Design;

Pipe rupture protection is addressed in Section 3.6, Protection against Dynamic Effects Associated with Postulated Rupture of Piping.

The ESWS continues to perform its safety function in the event of a fire. Subsection 9.5.1 addresses fire protection.

Leakage in the ESWS due to piping or component failure that could cause flooding of surrounding SSCs has been evaluated for the CCW pump and CCW HX room. Flooding mitigation in the ESWS is achieved by installation of a nonsafety grade electrode type level switch or detector in the leak-detecting floor drain box in the CCWP and CCW HX room of each train. Pre-determined water level due to leakage in any CCWP and CCW HX room is alarmed in the MCR. A nonsafety grade electrode type level switch is also provided in the leak-detection floor drain box in each essential chiller unit room located in the power source building (PS/B). Pre-determined water level due to leakage in any essential chiller room is alarmed in the MCR. The leaking train can also be identified by low outlet flow from each CCW HX or decrease in the ESWS header pressure.~~Flooding and flooding effects in the ESWS are mitigated due to the physical separations in the reactor building such as watertight doors. These doors are monitored and controlled during plant operation and maintenance. Each CCW pump & CCW HX room has a leak-detecting floor drain box with electrode type level switch to provide alarm in the MCR for the detection of a leaking train from the ESWS or CCWS. A common alarm in the MCR provides audible indication of a leak or flooding. A method of identifying a leaking ESWS train by an operator who recognizes leakage of the ESWS in either side of R/B through the above alarm from the CCW pump & CCW HX room will be the indications from the inlet pressure and outlet flow of the CCW HX and essential chiller units.~~ The leaking ESWS and CCWS trains ~~is~~are then isolated by shutting down the corresponding ESWS pump and CCWS pump, and activating the standby and intact ESWS and CCWS trains. If, however, the leak detector fails to alarm, or the operator fails to recognize the flooding signals, the physical separations, which include water tight doors, between the east side of the ESWS enclosing ESWS trains A and B and the west side of the ESWS enclosing ESWS trains C and D will serve to isolate flooding and prevent it from propagating to other trains.

The ESWS equipment and piping are located in the R/B, the UHSRS, the ESWPT, and the PS/B.~~either underground or in the pump house and the R/B.~~ These buildings are designed to withstand the effects of earthquakes, tornadoes, hurricanes, floods, external missiles and other appropriate natural phenomena. Sections 3.3, 3.4, 3.5, 3.7, 3.8 and 9.5 describe the bases of the structural design and protection from natural events. Radioactive contamination of the ESWS is unlikely but can occur if the CCWS system is contaminated and then leaks into ESWS via the CCW HX. Subsection 9.2.1.2.1 describes prevention of this leakage to the environment.

Four independent, redundant trains, each powered from an independent Class 1E power supplies, are provided. The system is designed to provide the required cooling to mitigate the consequences of an accident with a single failure and one train unavailable due to maintenance coincident with a loss of offsite power.

Redundant safety trains are installed in suitable raceways and are generally separated from adjacent safety trains by 3-hour fire rated structural barriers such as reinforced concrete walls with 3-hour fire rated dampers and penetration seals, and 3-hour fire rated doors between compartments. In a limited number of cases, electrical train separation is obtained by enclosing cables trays and conduits within a fire protective envelope such as a fire rated wrap system. In such instances, the cables are appropriately de-rated and the fire wrap system has passed laboratory testing showing that the criteria of RG 1.189, Rev. 1 (Ref.9.5.1-12) and Supplement 1 to NRC Generic Letter 86-10 (Ref.9.5.1-11) are satisfied by the applicable installation. The design, routing, and separation of cables and raceways are further described in Chapter 8.

Control of Combustible Materials

The plant is constructed using noncombustible materials to the extent practicable. The selection of construction materials and the control of combustible materials are in accordance with the guidance of RG 1.189 (Ref. 9.5.1-12) and Section 3.3 of NFPA 804 (Ref. 9.5.1-14).

The storage and use of hydrogen are in accordance with the guidance of NFPA 55 (Ref. 9.5.1-18). Hydrogen lines in safety-related areas are designed to seismic category I requirements.

Ventilation systems are designed to maintain the hydrogen concentrations in the battery rooms below 1 % by volume, as described in Subsections 9.4.3 and 9.4.5.

The T/B and the turbine lubrication oil system, located in the T/B, are separated from areas containing safety-related equipment by 3-hour rated fire barriers.

The COL Applicant takes measures to assure that outdoor oil-filled transformers are separated from plant buildings in accordance with the guidance of NFPA 804 (Ref. 9.5.1-14) (See COL item 9.5(2)).

The primary fuel storage for each (4 total) emergency power source gas turbine generator (GTG) and its associated transfer pumps is located in the yard area~~ and is below grade~~ within a substantial concrete vault confinement. Potential fuel leaks or spills from the storage tanks are confined within the compartment surrounding the tanks. Each GTG day tank located within its GTG room is provided with a spill confinement enclosure capable of holding 110% of the day tank capacity.

Quantities and locations of other combustible materials are identified in the FHA (see Appendix 9A).

Control of Radioactive Materials

As described in the FHA (Appendix 9A), materials that collect or contain radioactivity, such as spent ion exchange resins and filters, are protected and stored in accordance with the guidance of RG 1.189 (Ref. 9.5.1-12).

9.5.1.2.2 Fire Protection Water Supply System

- 10 CFR 50, Appendix A, Criterion 17 – "Independence and Redundancy Criteria"
- The FOS is designed for protection against pipe break outside the Containment, to withstand worst environmental phenomenon, and to seismic category I requirements.

9.5.4.2 System Description

9.5.4.2.1 General Description

The FOS is shown schematically in Figure 9.5.4-1. Classification of equipment and components is given in Section 3.2.

There are four GTGs.

Each GTG FOS has the following:

(1) One fuel oil storage tank

(2) Two fuel oil transfer pumps

(3) One fuel oil day tank

(4) One fuel filling box for outside supply of fuel oil to the fuel oil storage tank

(5) Vent piping from both the fuel oil storage tank and the fuel oil day tank

(6) Piping and valves

(7) Instrumentation and controls

The system is safe from flooding (see Subsection 3.4.1.2). The system is protected from the effects of low temperatures in the building.

Each of the four GTG fuel oil storage tanks are contained in a separate, reinforced concrete seismic category I, and missile protected ~~underground~~ compartment. Each fuel oil storage tank compartment also contains the fuel oil transfer pumps, associated piping, valves, instrumentation, and connections for outside fuel oil supply. Each GTG is located in a separate seismic category I compartment. The vent and fill lines are provided with a level of protection equivalent to that for components located in the vital area. Each GTG room contains the GTG, one fuel oil day tank, piping, valves, and instrumentation. The compartments are separated to prevent a fire from spreading to another compartment. System component characteristics are provided in Table 9.5.4-1.

9.5.4.2.2 Component Descriptions

9.5.4.2.2.1 Fuel Oil Storage Tanks and Piping

Each fuel oil storage tank is designed for a seven-day supply to its associated GTG, without relying on the associated fuel oil day tank inventory, plus a margin for periodic testing of the associated GTG.

The fuel oil storage tanks are designed and fabricated to ASME Section III code and American Petroleum Institute Standards (API-650) (Ref. 9.5.4-7 and 8). Fittings are provided for tank level instrumentation, venting, sampling, and water removal. Flanged openings are provided as manholes for access to the tank interior and each tank is equipped with an internal sump and a drain connection. Each fuel oil storage tank is erected inside a concrete compartment to contain spills. Each fuel oil storage tank is equipped with a vent line with a flame arrestor and a level transmitter. Sufficient space around each fuel oil storage tank is provided for inspection, maintenance and repair of the system.

Each fuel oil storage tank has a fill connection ~~located at grade elevation~~ with locked-closed isolation valves and is capped and locked to prevent entry of moisture.~~, which~~The fill connection terminates in a box allowing replenishment of fuel from an outside supply source (e.g., truck) without interrupting operation of the GTG. The fuel oil storage tank fill connection is located above flood level to prevent flood water from entering the FOS. The fuel oil storage tank fill connection includes an internal pipe and diffuser to limit inlet filling velocities to prevent turbulence of sediment on the bottom of the tank. In addition, the fuel oil storage tank outlet connections are 6 inches above the tank bottom, to reduce the potential of sediment entry into the pipeline. A moisture separator and duplex filters are provided in the fuel oil piping and a duplex fuel oil filter is provided on each GTG to prevent detrimental effects on performance from sediment.

The fuel oil storage tanks are vented to atmosphere~~, and the vent connection is located above the grade elevation~~. The vent is located above the maximum flood level. The vent has a flame arrester and fine wire mesh to prevent insects from entering. Vent and fill connections are designed with a level of protection equivalent to that for components located in the vital area meeting the requirements of GDC 2.

Sample connections for sampling of oil, for sediments and water contents in the Fuel Oil Storage Tanks are located outside the vault and are designed with a level of protection equivalent to that for components located in the vital area, meeting the requirements of GDC 2. The sample connection is capped and locked to prevent entry of moisture. The flowing sample connections are located inside the PS/B close to the fuel oil day tanks.

The oil sample connection, the vent and fill connections, will be, individually or as a group, enclosed in a protective enclosure meeting the requirements of GDC 2. In addition, access is provided for taking oil samples, venting of the oil storage tank when it is being filled and to fill the oil storage tank and maintain the duplex filter and moisture separator associated with the fill line.

Each Power Source Fuel Storage Vault (PSFSV) is provided with a vapor and liquid detection system that is equipped with on-site audible and visual warning devices with battery backup.

Each fuel oil storage tank and the transfer pumps are located in a~~n~~ ~~underground~~ vault identified as the PSFSVs and each vault is provided with a manually operated ventilation

system for personnel safety to remove any vapors when personnel enter the area. The PSFSV will not have a normally running ventilation system. The ventilation system consists of a supply air opening with a backdraft damper at the ceiling of the vault from the outside, and ducted to the bottom of one side of the vault. This duct will have an in-duct electric heater controlled by a local thermostat in the downstream ductwork. An exhaust fan at the ceiling with a backdraft damper to the outside is ducted to the bottom other side of the vault. This local ventilation system will be turned on locally (or from the MCR) only when personnel are required to enter the area for the performance of surveillances, inspections and maintenance activities.

~~The PSFSV is 33 feet underground. This provides a natural insulation and a constant ground temperature below grade that maintains the vault temperature within the required temperature limits for the fuel oil.~~ The in-duct electric heater is provided on the supply air duct so that during the winter, whenever the ventilation system is used the incoming cold outside air is heated and the vault area will be able to be maintained above freezing.

Unit heaters are provided to maintain fuel oil temperature within specification for when the Power Source Fuel Storage Vault temperature may drop below 35ºF. The COL applicant is to address the need for installing unit heaters in the PSFSV. The ~~tunnel~~ concrete pipe chases between the fuel oil tank room and the PS/B is where the fuel oil piping is passing through. Within the ~~tunnel~~ concrete pipe chase is a 3-hour fire rated wall that separates the PS/B from the PSFSV. The door and penetrations through this wall are all 3-hour fire rated. One side of the ~~tunnel~~ concrete pipe chase is part of the PS/B, which is a normally heated building. The other side of the ~~tunnel~~ concrete pipe chase is considered a part of the PSFSV and has the same conditions of the vault area and is one of the locations that would have a unit heater if required as part of the COL applicant evaluation of extreme cold conditions.

The Fuel Oil Storage Tanks are fabricated of carbon steel material that does not contain Cu or Zn. The exterior and interior surfaces of the fuel oil storage tanks are painted with a primer and finish coat system for corrosion protection of the tank surface. Exterior surfaces of the fuel oil transfer piping are painted for corrosion protection. The interior surfaces of the fuel oil storage tanks are coated with epoxy coating that does not contain Cu or Zn which due to exposure could promote fuel degradation and promote gel formation.

The piping material is ASTM A106, Grade B carbon steel and the valve material is carbon steel (Ref. 9.5.4-9).

Materials used (with proper coating, as necessary) are compatible with fuel oil service.

9.5.4.2.2.2 Gas Turbine Generator Fuel Oil Transfer Skids

Each GTG FOS is serviced by a modularized skid mounted fuel oil transfer assembly, consisting of suction strainers, two fuel oil transfer pumps, a moisture separator, and a fuel filter with the interconnecting piping, valves, and instrumentation. These skids are located in the same compartments as the Fuel Oil Storage Tanks.

The fuel oil transfer pump skids are powered from their respective Class 1E power buses.

9.5.4.2.4 System Operation

Each fuel oil storage tank is replenished from various mobile suppliers as required to maintain a seven day supply for the corresponding GTG. The fill line incorporates a normally closed valve and a filler cap at the end to preclude the entrance of water. The fill line is above grade. The fill line has a filter located downstream of the isolation valve to prevent entrance of solid material into the tank.

One of the two 100% fuel oil transfer pumps takes suction from its fuel oil storage tank and discharges fuel oil to its associated GTG fuel oil day tank. Each pump is capable of supplying its GTG and, simultaneously, increasing the inventory in the fuel oil day tank. The fuel oil transfer pump is automatically started and stopped on day tank level control. Any overflow is returned to the fuel oil storage tank via the recirculation line. Provisions are included in the fuel oil storage tanks and fuel oil day tanks to check for and remove accumulated water.

9.5.4.3 Safety Evaluation

The GTG FOS consists of four redundant and independent trains, each dedicated to its respective GTG.

All components of the GTG FOS are designed to ASME Section III, Class 3 (equipment Class 3) and seismic category I requirements (Ref. 9.5.4-7). However, when an ASME Class 3 design component is not available, the component is proven to be of equivalent quality (through seismic design, testing, qualification and documentation).

The fuel oil storage tank compartment is designed to seismic category I requirements. The fuel oil storage tanks are separately located ~~underground~~ in concrete vaults and are protected from damage by missiles (tornados and hurricanes), external floods, and other environmental factors. The fill and sample connections are ~~located at grade elevation with~~ locked-closed with isolation valves and are capped and locked to prevent entry of moisture. The fuel oil storage tanks are vented to atmosphere, and the vent connection is located above the grade elevation. The vent is located above the maximum flood level. The fuel oil storage tanks vents are fitted with a flame arrestor to protect the tanks from an exterior fire. The end of the goose necked vent is covered with a fine meshed screen to prevent insects and debris from entering the vent.

The seismic category I portions of GTG fuel oil piping is routed in ~~tunnels~~ concrete pipe chases between the storage tank concrete vaults and the power source building.

The fuel oil storage tanks are protected from corrosion.

All fuel lines are routed so that they are remote from heat producing components and equipment, which may be in located the same compartment. Each fuel oil day tank is enclosed in its GTG room which is fire rated for three hours of fire separation. The redundant GTG rooms are separated from each other by concrete walls, which are three hour rated fire barriers.

The fuel oil storage tanks are sized to provide sufficient capacity for seven days of operation for each GTG. The COL applicant is to confirm that the operator can arrange for additional fuel to be delivered to the plant site within this period. Each pump is powered from the same train Class 1E bus. Failure of one FOS train would not affect the operability of components in the other train.

The fuel oil temperature is maintained above the cloud point to assure its quality. The fuel oil temperature above the cloud point is achieved by an area electric heater located in the fuel oil storage tank vault, as necessary and by routing of the transfer piping in the ~~underground tunnel~~ concrete pipe chases to the power source building. The fuel oil in the transfer line can be maintained above the cloud point temperature with the area electric heater in service and operation in the recirculation mode (bypassing the day tank) back to the fuel oil storage tank.

The fuel oil storage tank inventory is sampled for quality on a periodic basis for specific gravity, water sediment, viscosity, contamination, algae formation, etc. and if degradation is detected, corrective action is taken, as discussed in subsection 9.5.4.2.3. A flowing sample point is provided on the inlet line to the fuel oil day tank. A tank aggregate sample point is provided from the top of the tank to sample the fuel oil (including sediments and water) in the fuel oil storage tank. These sample points are shown in Figure 9.5.4-1.

The fuel stored in the fuel oil storage and day tanks shall be removed and the accumulated sediment removed and the tanks cleaned every ten year intervals, as a minimum or if fuel oil degradation is detected. The fuel oil from the day tank to be cleaned will be drained to the fuel oil storage tanks. The fuel oil from the storage tank to be cleaned will be pumped to an empty tanker and the accumulated sediments drained or removed manually, as necessary and collected in proper containers.

The PSFSV ventilation system is classified as equipment class 5 (Non-Safety) and seismic category II. This equipment is in a seismic category I structure with equipment classified as safety-related.

The ventilation openings at the ceiling will have a seismic missile enclosure to protect the safety-related fuel oil tank. The ventilation backdraft dampers and exhaust fans for ease of access for maintenance are to be located within these missile enclosures. The backdraft damper is designed to withstand the effects of a tornado.

9.5.4.4 Inspection and Testing Requirements

The FOS is tested prior to initial startup. Preoperational testing is described in Section 14.2. System performance is verified during periodic GTG testing. Periodic inspection of the fuel oil storage tank vents is performed to assure there are no obstructions.

Inservice inspection of piping is performed in accordance with the requirements of ASME Section XI, as discussed in Section 6.6 (Ref. 9.5.4-11).

Technical Specification surveillance testing and inspection of the FOS is performed to assure operational readiness, without loss of system function as described in Chapter 16.

Security-Related Information – Withheld Under 10 CFR 2.390

(SRI)

Figure 9A-27 Fire Zones and Fire Areas ESW Piping Tunnel and Power Sauce Fuel Storage Vault

Security-Related Information – Withheld Under 10 CFR 2.390

Figure 11.5-2a Location of Radiation Monitors at Plant (Power Block at Elevation -26'-4")

Security-Related Information – Withheld Under 10 CFR 2.390

Figure 11.5-2k Location of Radiation Monitors at Plant (Power Block Section A-A)

Security-Related Information – Withheld Under 10 CFR 2.390

Figure 12.3-1 Radiation Zones for Normal Operation/Shutdown Site (Sheet 1 of 34)

Security-Related Information – Withheld Under 10 CFR 2.390

Figure 12.3-2 General Plant Arrangement with Post Accident Vital Areas (Sheet 1 of 10)
Power Block at Elevation -26'-4"

Security-Related Information – Withheld Under 10 CFR 2.390

Figure 12.3-3 Post Accident Radiation Zone MAP:1hour After Accident (Sheet 1 of 10)
Power Block at Elevation -26'-4"

Security-Related Information – Withheld Under 10 CFR 2.390

Figure 12.3-4 Post Accident Radiation Zone MAP:1day After Accident (Sheet 1 of 10)
Power Block at Elevation -26'-4"

Security-Related Information – Withheld Under 10 CFR 2.390

Figure 12.3-5 Post Accident Radiation Zone MAP:1week After Accident (Sheet 1 of 10)
Power Block at Elevation -26'-4"

Security-Related Information – Withheld Under 10 CFR 2.390

Figure 12.3-6 Post Accident Radiation Zone MAP:1month After Accident (Sheet 1 of 10)
Power Block at Elevation -26'-4"

Security-Related Information – Withheld Under 10 CFR 2.390

Figure 12.3-11 Post Accident Radiation Zone MAP:1week After Accident (Sheet 1 of 10)
Power Block at Elevation -26'-4"

B 3.8 ELECTRICAL POWER SYSTEMS

B 3.8.3 Class 1E Gas Turbine Fuel Oil, Lube Oil, and Starting Air

BASES

BACKGROUND

Each Class 1E Gas Turbine Generator (GTG) is provided with a storage tank having a fuel oil capacity sufficient to operate that gas turbine for a period of 7 days while the Class 1E GTG is supplying maximum post loss of coolant accident load demand discussed in Subsection 9.5.4 (Ref. 1). The maximum load demand is calculated using the assumption that a minimum of any four Class 1E GTGs is available. This onsite fuel oil capacity is sufficient to operate the Class 1E GTGs for longer than the time to replenish the onsite supply from outside sources.

Fuel oil is transferred from storage tank to day tank by either of two transfer pumps associated with each storage tank. ~~All outside tanks, pumps, and piping are located underground.~~

For proper operation of the standby Class 1E GTGs, it is necessary to ensure the proper quality of the fuel oil. Regulatory Guide 1.137 (Ref. 2) addresses the recommended fuel oil practices as supplemented by ANSI N195 (Ref. 3). The fuel oil properties governed by these SRs are the water and sediment content, the kinematic viscosity, specific gravity (or API gravity), and impurity level.

The Class 1E GTG lubrication system is designed to provide sufficient lubrication to permit proper operation of its associated Class 1E GTG under all loading conditions. The system is required to circulate the lube oil to the gas turbine engine working surfaces and to remove excess heat generated by friction during operation. The engine oil sump in each Class 1E GTG gear boxes contains an inventory capable of supporting a minimum of 7 days of operation. This supply is sufficient to allow the operator to replenish lube oil from outside sources.

Each Class 1E GTG has an air start system with adequate capacity for three successive start attempts on the Class 1E GTG without recharging the air start receiver(s).

APPLICABLE SAFETY ANALYSES

The initial conditions of Anticipated Operational Occurrence (AOO) and Postulated Accident (PA) analyses in Chapter 6 (Ref. 4), and in Chapter 15 (Ref. 5), assume Engineered Safety Feature (ESF) systems are OPERABLE. The Class 1E GTGs are designed to provide sufficient capacity, capability, redundancy, and reliability to ensure the availability of necessary power to ESF systems so that fuel, Reactor Coolant System and containment design limits are not exceeded. These limits are discussed in more detail in the Bases for Section 3.2, Power Distribution Limits; Section 3.4, Reactor Coolant System (RCS); and Section 3.6, Containment Systems.

1-2 Electric

Page	Location (e.g., subsection with paragraph/ sentence/ item, table with row/column, or figure)	Description of Change
1.2-46	Section 1.2.1.5	Change: “all Class 1E” to “Class 1E”. Reason: Editorial change to appropriate description Change: “within one hour without HVAC” to “for at least one hour without HVAC” Reason: Editorial change to appropriate description.
8.2-4	Section 8.2.1.2	Change: Add CDI brackets on sentence “, even supposing that these circuits share a common underground duct bank.”. Reason: These cable routs are site specific.
8.2-13	Figure 8.2-1	Change: Add indication for CDI with cloud shape on Bus Duct / Cable Buses and note. Reason: Location of Bus Duct / Cable Buses ESWPT is site specific.
8.3-66-68	Table 8.3.1-3	Change: Add CDI brackets on electrical load distribution of Circulation Water Pump, Secondary System Cooling Tower Fan, Makeup Water Pump, Customer Equipment and Blowdown Pump, and Total Bus Capacity and Transformer Capacity. In this table, Secondary System Cooling Tower Fan, Makeup Water Pump, Customer Equipment and Blowdown Pump themselves are also indicated as CDI. Reason: Employment of Secondary System Cooling Tower Fan, Makeup Water Pump, Customer Equipment and Blowdown Pump depends on site condition, as aresult their electrical capacity are site specific. Furthermore electrical capacity of Circulation Water Pump depends on site specific design. Consequently Total Bus Capacity and Transformer Capacity are site specific.

GTGs with diverse starting system are provided as AAC sources. The auxiliary and support systems for the AAC GTGs are independent and separate from the Class 1E GTGs to minimize the potential for common mode failures.

- In the US-APWR design, power to the shutdown buses can be restored from the AAC sources within 60 minutes and, hence, a coping analysis for a duration of 60 minutes is performed.

- Until AAC GTG restores the Class 1E power system within one hour after an SBO occurs, all pumps and fans can not be operated. However, during this time period, the plant is in a condition similar to hot shut down. The turbine driven emergency feedwater pump (EFW) pump and the main steam relief valve remove decay heat so that the core and the reactor coolant system (RCS) are kept in a safe mode. RCP seal can keep its integrity for at least one hour without water cooling. The ~~all~~ Class 1E electrical cabinets and I&C cabinets can keep their integrity for at least ~~within~~ one hour without HVAC.

1.2.1.5.7 Main Control Room and Other Human-System Interface

The main control room (MCR) is designed to perform centralized monitoring and control of the instrumentation and control systems that are necessary for use during normal operation, abnormal transients, and accidents. Furthermore, the main control room boards are designed to reduce the potential for misoperation and misjudgment and to allow easy operation. The human-system interface (HSI) other than the MCR includes the remote shutdown console (RSC), local control stations such as the auxiliary equipment control console, the technical support center (TSC), and the emergency operations facility (EOF).

1.2.1.6 Site Characteristics

The US-APWR is a standard nuclear power plant designed to be constructed on a site, whose parameters are as described in DCD Chapter 2 (Site Characteristics), which are used as the basis for design certification. The allowable site interface parameters described in Chapter 2 are selected by MHI to bound most potential sites in the U.S.

The site-specific details of a US-APWR site plan is to be presented in the licensee's combined license application (COLA). A typical site plan has, however, been prepared by MHI and is shown in Figure 1.2-1.

The area within the perimeter fence of a US-APWR installation includes a site-specific portion of the facility. The control structure at the main gate controls site ingress and egress. As shown on the site plan, the main building structures are arranged with the R/B in the center and the other buildings clustered around the R/B to facilitate safe and efficient operation. The final configuration of the main cooling system is site-specific; however, the reference plant main cooling complex is of [[cooling tower]] ~~the once-through cooling~~ type. The unit's auxiliary transformers, reserve auxiliary transformer, and the main step-up transformers are located in the transformer area. The main switchyard area is site-specific.

breaker on the high voltage side of the MT and all incoming circuit breakers of the MV buses connected to the UAT power source; and all affected MV buses are automatically transferred to the RAT source. The MV Class 1E and non-Class 1E P buses are not affected since these are normally fed from the RATs. The UAT incoming breakers to these buses is locked out and blocked from closing.

Unit synchronization is normally through the GLBS. Synchrocheck relays are used to ensure proper synchronization of the unit to the offsite power system.

High voltage circuit breakers are sized and designed in accordance with IEEE Std C37.010 and C37.06 (Reference 8.2-14, 8.2-15). High voltage disconnecting switches are sized and designed in accordance with IEEE Std C37.32 (Reference 8.2-16).

The MTs, UATs and RATs have differential, over-current, sudden pressure and ground over-current protection schemes per IEEE Std 666 (Reference 8.2-9). The COL applicant is to provide site-specific protection scheme.

Isolated phase busduct provides the electrical interconnections between generator load terminals to the GLBS, the GLBS to the MT and the disconnect links on the high voltage side of the UATs, and the UAT disconnect links to the UATs. Non-segregated phase bus ducts/cable buses provide electrical connections between the low voltage side of the UATs and RATs to the 13.8 kV and 6.9 kV MV switchgear. The non-segregated phase bus ducts/cable buses from the UATs and RATs are physically separated to minimize the likelihood of simultaneous failure.

Each of the single phase transformers of the MT is provided with disconnect links so that a failed transformer may be taken out of service and the spare transformer can be connected. All UATs are also provided with disconnect links so that a failed transformer can be taken out of service. With one UAT or one RAT out of service, all MV buses will have access to at least one offsite power source.

The MT, UATs and RATs, are located in the area of MT and UATs and area of RAT, respectively, separated by three-hour rated fire barriers, in the transformer yard adjacent to the turbine building (T/B). Cables associated with the normal preferred and alternate preferred circuits are physically separated from each other to minimize common cause failure[[, even supposing that these circuits share a common underground duct bank]]. In accordance with the guidance of Generic Letter 2007-01, for preventing the degradation of medium voltage cables that are installed in underground duct banks, the manholes are at the low point with the conduits in the connecting duct banks sloped for water drainage into the manholes. The manholes are available for temporary sump pumps for water draining. The medium voltage cables whether in a duct bank or in a conduit are monitored by periodical testing, such as partial discharge testing, time domain reflectometry, dissipation factor testing, and very low frequency AC testing. These PPS circuits are also designed to minimize common cause failure with standby power sources. All of these transformers are provided with containment for collection of transformer oil in case of tank leakage or rupture.

8.2.1.2.1 Switchyard

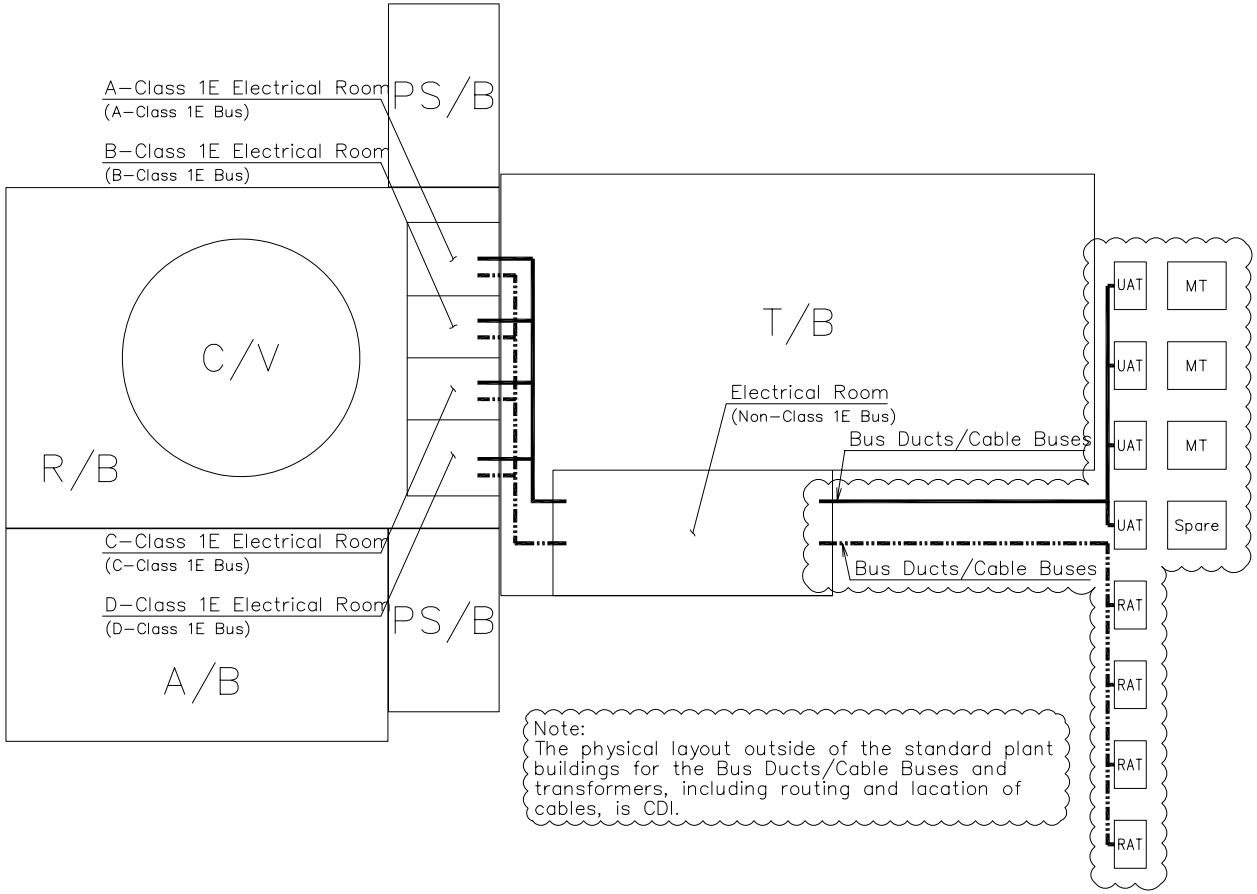

Figure 8.2-1 Layout drawing showing MT, UAT, RAT, MV Buses

Table 8.3.1-3 Electrical Load Distribution - UAT/RAT Loading (Sheet 1 of 3)
Normal Operation

Load	Rated Output of Load [kW]	Load Factor [%]	Efficiency [%]	Power Factor [%]	Input of Load			Quantity Installed	Quantity Operating	UAT 1 RAT 1		UAT 2 RAT 2		UAT 3 RAT 3										UAT 4 RAT 4									
										13.8kV winding		13.8kV winding		6.9kV winding										6.9kV winding									
										N1 Bus		N2 Bus		A Bus		B Bus		N3 Bus		N4 Bus		P1 Bus		C Bus		D Bus		N5 Bus		N6 Bus		P2 Bus	
					[kW]	[kVAR]	[kVA]			Q	[kVA]	Q	[kVA]	Q	[kVA]	Q	[kVA]	Q	[kVA]	Q	[kVA]	Q	[kVA]	Q	[kVA]	Q	[kVA]	Q	[kVA]	Q	[kVA]	Q	[kVA]
Reactor Coolant Pump	6000	100	95	85	6316	3915	7431	4	4									1	7431	1	7431							1	7431	1	7431		
Circulating Water Pump	[[2300	95	90	65	2428	2839	3736	8	8	4	14944	4	14944																				]]
Motor Driven Main Feed Water Pump	11000	95	90	85	11612	7198	13662	4	4	2	27324	2	27324																				
Condensate Pump	3500	95	90	85	3695	2292	4348	3	2*											1	4348							1	4348	1	4348		
[[Secondary System Cooling Tower Fan	13500	95	90	85	14250	8832	16765	2	2	1	16765	1	16765																				]]
[[Makeup Water Pump	2300	95	90	85	2428	1506	2857	2	1*											1	2857									1	2857		]]
Turbine Component Cooling Water Pump	560	95	90	85	592	368	697	3	2*									1	697			1	697									1	697
Low Pressure Feed Water Heater Drain Pump	500	95	90	85	528	329	622	3	3									1	622	1	622									1	622		
Auxiliary Building Exhaust Fan	375	95	90	85	396	246	466	3	2*									1	466	1	466							1	466				
[[Customer Equipment	3200kVA	80	100	100	2560	0	2560	2	2	1	2560	1	2560																				]]
Insulator Washing Pump	840	50	90	85	467	291	550	2	1*											1	550									1	550		
Emergency Feed Water Pump	590	73	90	85	475	295	559	2	0																								
Safety Injection Pump	900	95	90	85	950	589	1118	4	0																								
Essential Service Water Pump	720	95	90	85	760	473	895	4	2*					1	895	1	895							1	895	1	895						
Component Cooling Water Pump	610	95	90	85	644	400	758	4	2*					1	758	1	758							1	758	1	758						
Containment Spray/Residual Heat Removal Pump	400	95	90	85	423	263	498	4	0																								
Charging Pump	820	95	90	85	866	537	1019	2	1*					1	1019											1	1019						
Control Rod Drive Mechanism Cooling Fan	315	95	90	85	333	207	392	2	1*													1	392									1	392
Non-Essential Chiller Unit	450	95	90	85	475	295	559	4	3*													2	1118									2	1118
[[Blowdown Pump	380	95	90	85	402	249	473	2	1*									1	473									1	473				]]
A Station Service Transformer	2500kVA	80	-	85	1700	1054	2000	1	1					1	2000																		
B Station Service Transformer	2500kVA	80	-	85	1700	1054	2000	1	1							1	2000																
C Station Service Transformer	2500kVA	80	-	85	1700	1054	2000	1	1															1	2000								
D Station Service Transformer	2500kVA	80	-	85	1700	1054	2000	1	1																	1	2000						
P1 Station Service Transformer	2500kVA	90	-	85	1913	1185	2250	1	1													1	2250										
P2 Station Service Transformer	2500kVA	90	-	85	1913	1185	2250	1	1																							1	2250
N1 Station Service Transformer	2500kVA	90	-	85	1913	1185	2250	1	1	1	2250																						
N2 Station Service Transformer	2500kVA	90	-	85	1913	1185	2250	1	1			1	2250																				
N3 Station Service Transformer	2500kVA	90	-	85	1913	1185	2250	1	1									1	2250														
N4 Station Service Transformer	2500kVA	90	-	85	1913	1185	2250	1	1											1	2250												
N5 Station Service Transformer	2500kVA	90	-	85	1913	1185	2250	1	1																			1	2250				
N6 Station Service Transformer	2500kVA	90	-	85	1913	1185	2250	1	1																					1	2250		
[[Total Bus Capacity [kVA]											63843		63843		4672		3653		11939		18524		4457		3653		4672		14968		18058		4457]]
[[Transformer Capacity [kVA]											63843		63843										43245										45808]]

*: The quantity that is necessary for operation of a plant is this number. This number does not match up to a total of the quantity of operation of mentions in a column of each transformer.

Table 8.3.1-3 Electrical Load Distribution - UAT/RAT Loading (Sheet 2 of 3)
Start-up/Shutdown

Load	Rated Output of Load [kW]	Load Factor [%]	Efficiency [%]	Power Factor [%]	Input of Load			Quantity Installed	Quantity Operating	UAT 1 RAT 1		UAT 2 RAT 2		UAT 3 RAT 3										UAT 4 RAT 4									
										13.8kV winding		13.8kV winding		6.9kV winding										6.9kV winding									
										N1 Bus		N2 Bus		A Bus		B Bus		N3 Bus		N4 Bus		P1 Bus		C Bus		D Bus		N5 Bus		N6 Bus		P2 Bus	
					[kW]	[kVAR]	[kVA]			Q	[kVA]	Q	[kVA]	Q	[kVA]	Q	[kVA]	Q	[kVA]	Q	[kVA]	Q	[kVA]	Q	[kVA]	Q	[kVA]	Q	[kVA]	Q	[kVA]	Q	[kVA]
Reactor Coolant Pump	7800	100	95	85	8211	5089	9660	4	4									1	9660	1	9660							1	9660	1	9660		
Circulating Water Pump	[[2300	95	90	65	2428	2839	3736	8	8	4	14944	4	14944																				]]
Motor Driven Main Feed Water Pump	11000	95	90	85	11612	7198	13662	4	4	2	27324	2	27324																				
Condensate Pump	3500	95	90	85	3695	2292	4348	3	1*											1	4348									1	4348		
[[Secondary System Cooling Tower Fan	13500	95	90	85	14250	8832	16765	2	2	1	16765	1	16765																				]]
[[Makeup Water Pump	2300	95	90	85	2428	1506	2857	2	1*											1	2857									1	2857		]]
Turbine Component Cooling Water Pump	560	95	90	85	592	368	697	3	2*									1	697			1	697									1	697
Low Pressure Feed Water Heater Drain Pump	500	95	90	85	528	329	622	3	3									1	622	1	622									1	622		
Auxiliary Building Exhaust Fan	375	95	90	85	396	246	466	3	2*									1	466	1	466							1	466				
[[Customer Equipment	3200kVA	80	100	100	2560	0	2560	2	2	1	2560	1	2560																				]]
Insulator Washing Pump	840	50	90	85	467	291	550	2	1*											1	550									1	550		
Emergency Feed Water Pump	590	73	90	85	475	295	559	2	0																								
Safety Injection Pump	900	95	90	85	950	589	1118	4	0																								
Essential Service Water Pump	720	95	90	85	760	473	895	4	4					1	895	1	895							1	895	1	895						
Component Cooling Water Pump	610	95	90	85	644	400	758	4	4					1	758	1	758							1	758	1	758						
Containment Spray/Residual Heat Removal Pump	400	95	90	85	423	263	498	4	0																								
Charging Pump	820	95	90	85	866	537	1019	2	2					1	1019											1	1019						
Control Rod Drive Mechanism Cooling Fan	315	95	90	85	333	207	392	2	1*													1	392									1	392
Non-Essential Chiller Unit	450	95	90	85	475	295	559	4	3*													2	1118									2	1118
[[Blowdown Pump	380	95	90	85	402	249	473	2	1*									1	473									1	473				]]
A Station Service Transformer	2500kVA	80	-	85	1700	1054	2000	1	1					1	2000																		
B Station Service Transformer	2500kVA	80	-	85	1700	1054	2000	1	1							1	2000																
C Station Service Transformer	2500kVA	80	-	85	1700	1054	2000	1	1															1	2000								
D Station Service Transformer	2500kVA	80	-	85	1700	1054	2000	1	1																	1	2000						
P1 Station Service Transformer	2500kVA	90	-	85	1913	1185	2250	1	1													1	2250										
P2 Station Service Transformer	2500kVA	90	-	85	1913	1185	2250	1	1																							1	2250
N1 Station Service Transformer	2500kVA	90	-	85	1913	1185	2250	1	1	1	2250																						
N2 Station Service Transformer	2500kVA	90	-	85	1913	1185	2250	1	1			1	2250																				
N3 Station Service Transformer	2500kVA	90	-	85	1913	1185	2250	1	1									1	2250														
N4 Station Service Transformer	2500kVA	90	-	85	1913	1185	2250	1	1											1	2250												
N5 Station Service Transformer	2500kVA	90	-	85	1913	1185	2250	1	1																			1	2250				
N6 Station Service Transformer	2500kVA	90	-	85	1913	1185	2250	1	1																					1	2250		
[[Total Bus Capacity [kVA]											63843		63843		4672		3653		14168		20753		4457		3653		4672		12849		20287		4457]]
[[Transformer Capacity [kVA]											63843		63843										47703										45918]]

*: The quantity that is necessary for operation of a plant is this number. This number does not match up to a total of the quantity of operation of mentions in a column of each transformer.

Table 8.3.1-3 Electrical Load Distribution - UAT/RAT Loading (Sheet 3 of 3)
Steam Generator Tube Rupture

Load	Rated Output of Load [kW]	Load Factor [%]	Efficiency [%]	Power Factor [%]	Input of Load			Quantity Installed	Quantity Operating	UAT 1 RAT 1		UAT 2 RAT 2		UAT 3 RAT 3										UAT 4 RAT 4									
										13.8kV winding		13.8kV winding		6.9kV winding										6.9kV winding									
										N1 Bus		N2 Bus		A Bus		B Bus		N3 Bus		N4 Bus		P1 Bus		C Bus		D Bus		N5 Bus		N6 Bus		P2 Bus	
					[kW]	[kVAR]	[kVA]			Q	[kVA]	Q	[kVA]	Q	[kVA]	Q	[kVA]	Q	[kVA]	Q	[kVA]	Q	[kVA]	Q	[kVA]	Q	[kVA]	Q	[kVA]	Q	[kVA]	Q	[kVA]
Reactor Coolant Pump	6000	100	95	85	6316	3915	7431	4	3*									1	7431	1	7431							1	7431	1	7431		
Circulating Water Pump	[[2300	95	90	65	2428	2839	3736	8	8	4	14944	4	14944																				]]
Motor Driven Main Feed Water Pump	11000	95	90	85	11612	7198	13662	4	0																								
Condensate Pump	3500	95	90	85	3695	2292	4348	3	2*											1	4348							1	4348	1	4348		
[[Secondary System Cooling Tower Fan	13500	95	90	85	41250	8832	16765	2	2	1	16765	1	16765																				]]
[[Makeup Water Pump	2300	95	90	85	2428	1506	2857	2	1*											1	2857									1	2857		]]
Turbine Component Cooling Water Pump	560	95	90	85	592	368	697	3	2*									1	697			1	697									1	697
Low Pressure Feed Water Heater Drain Pump	500	95	90	85	528	329	622	3	0																								
Auxiliary Building Exhaust Fan	375	95	90	85	396	246	466	3	2*									1	466	1	466							1	466				
[[Customer Equipment	3200kVA	80	100	100	2560	0	2560	2	2	1	2560	1	2560																				]]
Insulator Washing Pump	840	50	90	85	467	291	550	2	1*											1	550									1	550		
Emergency Feed Water Pump	590	73	90	85	475	295	559	2	2							1	559							1	559								
Safety Injection Pump	900	95	90	85	950	589	1118	4	4					1	1118	1	1118							1	1118	1	1118						
Essential Service Water Pump	720	95	90	85	760	473	895	4	4					1	895	1	895							1	895	1	895						
Component Cooling Water Pump	610	95	90	85	644	400	758	4	4					1	758	1	758							1	758	1	758						
Containment Spray/Residual Heat Removal Pump	400	95	90	85	423	263	498	4	4					1	498	1	498							1	498	1	498						
Charging Pump	820	95	90	85	866	537	1019	2	0																								
Control Rod Drive Mechanism Cooling Fan	315	95	90	85	333	207	392	2	0																								
Non-Essential Chiller Unit	450	95	90	85	475	295	559	4	2													1	559									1	559
[[Blowdown Pump	380	95	90	85	402	249	473	2	1*									1	473									1	473				]]
A Station Service Transformer	2500kVA	80	-	85	1700	1054	2000	1	1					1	2000																		
B Station Service Transformer	2500kVA	80	-	85	1700	1054	2000	1	1							1	2000																
C Station Service Transformer	2500kVA	80	-	85	1700	1054	2000	1	1															1	2000								
D Station Service Transformer	2500kVA	80	-	85	1700	1054	2000	1	1																	1	2000						
P1 Station Service Transformer	2500kVA	90	-	85	1913	1185	2250	1	1													1	2250										
P2 Station Service Transformer	2500kVA	90	-	85	1913	1185	2250	1	1																							1	2250
N1 Station Service Transformer	2500kVA	90	-	85	1913	1185	2250	1	1	1	2250																						
N2 Station Service Transformer	2500kVA	90	-	85	1913	1185	2250	1	1			1	2250																				
N3 Station Service Transformer	2500kVA	90	-	85	1913	1185	2250	1	1									1	2250														
N4 Station Service Transformer	2500kVA	90	-	85	1913	1185	2250	1	1											1	2250												
N5 Station Service Transformer	2500kVA	90	-	85	1913	1185	2250	1	1																			1	2250				
N6 Station Service Transformer	2500kVA	90	-	85	1913	1185	2250	1	1																					1	2250		
[[Total Bus Capacity [kVA]											36519		36519		5828		5269		11317		17902		3506		5828		5269		14968		17436		3506]]
[[Transformer Capacity [kVA]											36519		36519										43822										47007]]

*: The quantity that is necessary for operation of a plant is this number. This number does not match up to a total of the quantity of operation of mentions in a column of each transformer.

1-3 ESWS & UHS

Page	Location (e.g., subsection with paragraph/ sentence/ item, table with row/column, or figure)	Description of Change
1.2-46	Section 1.2.1.6	Change: Delete “the once trough cooling”. Reason: DCD change the description of typical UHS cooling system from one through cooling type to cooling tower type. Change: Add “cooling tower “ with CDI brackets Reason: Cooling system design depends on site condition.
2.4-1	Section 2.4	Change: Add CDI brackets on “basin”. Reason: Design of Ultimate Heat Sink (UHS) depends on site condition.
3.7.9-1 - 3	Section 3.7.9	Change: All of design data and description related with cooling system are in CDI brackets. Reason: Planning of cooling system and design of UHS depend on site condition.
3.8-47	Section 3.8.4.1.3	Change: Add CDI brackets on “cooling tower enclosure”. Reason: Design of Essential Service Water System (ESWS) and UHS depends on site condition, therefore selection of cooling system is site specific. Change: Add CDI brackets on “basin”. Reason: Design of UHS depends on site condition.
9.2-1	Section 9.2.1	Change: Delete the sentence of “The following subsections contain conceptual design information enclosed in brackets and are outside the scope of the standard design, thus shall not be incorporated by reference in the COLA.” Reason: This sentence is not necessary in this section because it mentions the notice for CDI.
9.2-3 - 6	Section 9.2.1.2.1	Change: Delete “intake.” Reason: Design of UHS depends on site condition, Change: Add CDI brackets on “basin”. Reason: Design of UHS depends on site condition. Change: Delete the sentence of “The UHS, which is

Page	Location (e.g., subsection with paragraph/ sentence/ item, table with row/column, or figure)	Description of Change
		usually a freshwater (or saltwater) source, is the source of water to the intake basin." Reason: Design of UHS depends on site condition. Change: Add CDI brackets on sentence of "For discharge to cooling towers, the ESW is sampled prior to blowdown releases.". Reason: Design of UHS and cooling system of ESWS depends on site condition. Change: "temperatures as low as 32° F" to "a water temperatures as low as 32° F". Reason: Make description more specific. Change: Add CDI brackets on sentence of ""Piping running through tunnels and trenches are below grade so that freezing of the ESW is not a concern. Stagnant and exposed portions of the system are heat traced to ensure that the ESW inside these structures in maintained above 32° F." Reason: Design of ESWS which is out of standard design scope depends on site condition." Change: "reactor building. The" to "reactor building through the". Reason: Editorial change. Change: Add CDI brackets on sentence of "The piping layout of the UHS maintains the ESWS/UHS system pressure downstream of the pump discharge check valve above their saturation pressure at 140° F design temperature by ensuring that no piping high points are above the cooling tower spray header.". Reason: Design of UHS, ESWS and cooling system of ESWS depends on site condition. Change: Add CDI brackets on sentence of "Voiding in any train due to potential ESW drain down through the cooling tower spray nozzles may occur during loss of offsite power and subsequent pump trip.". Reason: Design of cooling system of ESWS depends on site condition. Change: "doese" to "does". Change: "water hammer;," to "water hammer,". Reason: Editorial change.

Page	Location (e.g., subsection with paragraph/ sentence/ item, table with row/column, or figure)	Description of Change
		Change: Delete the sentence of “ESW intake structure or”. Reason: Description of typical ESWS and UHS in revised DCD is cooling tower type. ESW intake structure should be employed in one-through cooling type. Change: Add CDI brackets on sentence of “As part of the water chemistry management program of a plant that utilizes cooling towers and basins as the ESWS water source, an ESWS blowdown line is installed at the ESWP discharge piping. Part of the pumped ESW is blown down to remove a portion of the accumulated chemical salts and dissolved solids per site environmental chemistry requirements while the UHS makeup system is in operation. Details are given for blowdown and UHS basin water makeup in Section 9.2.5.”. and in this sentence, change the phrase of “of a plant that utilized” to “for the” and delete the phrase of “as the ESWS water source”. Reason: Design of water chemistry for cooling system of ESWS depends on site condition. And change and deletion of phrases are to make description simple.
9.2-8	Section	Change: Add CDI brackets on sentence of “The 3mm mesh of the strainer element also assures that potential clogging of the cooling tower nozzles is avoided.”. Reason: Design of strainer in ESWS depends on site condition.
9.2-8 - 9	Section 9.2.1.2.2.5	Change: Add CDI brackets on sentence of “The piping located in trenches will be externally lined carbon steel and the lining material specification will vary according to the site soil chemistry. The rest of the ESWS piping will be carbon steel or internally lined carbon steel depending on ESWS water chemistry requirements. Cathodic protection will be provided for buried piping. Access manholes will be provided as required for periodic inspection.”. Reason: Design and location of piping and trench in ESWS depend on site condition.
9.2-11		Change: Add CDI brackets on sentence of “Water in the

Page	Location (e.g., subsection with paragraph/ sentence/ item, table with row/column, or figure)	Description of Change
		cooling tower spray header downstream of the high point in the CCW heat exchanger discharge pipe will drain to the UHS.”. Reason: Design of UHS depends on site condition. Change: Add CDI brackets on “basins”. Reason: Design of UHS depends on site condition.
9.2-13 - 14	Section 9.2.1.3	Change: Delete the sentence of “either underground or in the pump house and”. Reason: Location of ESWS’s equipments and piping depend on site condition. Change: Add CDI brackets on sentence of “such as the ESWS blowdown line, FSS supply line, ESWPT piping towards the intake and discharge structures, i.e. piping running between the nuclear island and UHSRS, and any ESWS piping in the UHSRS”. Reason: Planning of protection of ESWS depends on site condition.Change: Add CDI brackets on sentence of “such as the ESWS blowdown line and FSS supply line when applicable” Reason: Location of ESWS’s equipments and piping depend on site condition.
9.2.-34	Section 9.2.5	Change: Delete the sentence of “The following subsections contain conceptual design information enclosed in brackets and are outside the scope of the standard design, thus shall not be incorporated by reference in COLA.”. Reason: This sentence is not necessary in this section because it mentions the notice for CDI.
9.2-37	Section 9.2.5.2	Change: Add CDI brackets on sentence of “The UHS receives its standby electrical power from the onsite emergency power supplies during a LOOP.”” Reason: Design of UHS depends on site condition. Change: Add “normal” to 5th paragraph. Reason: Specify the design requirement to COL applicant. Change: Add CDI brackets on sentence of “the normal source of makeup water to the UHS inventory and the

Page	Location (e.g., subsection with paragraph/ sentence/ item, table with row/column, or figure)	Description of Change
		blowdown discharge location” Reason: Design of UHS depends on site condition. Change: Add CDI brackets on “blowdown”. Reason: Design of UHS depends on site condition.
9.2-37 - 38	Section 9.2.5.2.1	Change: Add CDI brackets on sentence of “The UHS consists of four 50 percent capacity mechanical draft cooling towers, one for each ESWS train, and four 33 and one-third percent capacity basins.”. Reason: Design of ESWS and UHS depend on site condition. Change: Add CDI brackets on sentence of “Each cooling tower consists of two cells with fans and motors, drift eliminators, film fills, risers, and water distribution system all enclosed and supported by a seismic category I reinforced concrete structure. Cooling tower components are designed per equipment Class 3 and quality group C requirements.”. Reason: Design of cooling system of ESWS and UHS depend on site condition. Change: Add CDI brackets on sentence of “The fan motors are powered from the Class 1E ac power buses. On loss of offsite power (LOOP), the motors are automatically powered from their respective division’s emergency power source, i.e. the Class 1E gas turbine generators (GTG).”. Reason: Design of cooling system of ESWS and UHS depend on site condition.Change: Add CDI brackets on “cooling tower” of UHS. Reason: Design of cooling system of UHS depend on site condition. Change: Delete “hot (inlet) water temperature are specified to maintain the”. Reason: Make description to be focused on cold temperature. Because design criteria is cold water temperature. Change: Add CDI brackets on “cold (outlet)” of UHS. Reason: In the case that UHS is cooling tower, the design criterion is UHS outlet temperature. In the case that UHS is sea, lake or pond, the criterion is inlet temperature to CCW Hx from the UHS.

Page	Location (e.g., subsection with paragraph/ sentence/ item, table with row/column, or figure)	Description of Change
		Change: Add "are" to the 4th paragraph. Reason: Editorial change. Change: Add CDI brackets on sentences of "The cooling towers utilize the basins for structural foundation. The ESW intake basin located underneath the ESW pump house occupies a corner of the UHS basin. The ESW intake basin is deeper than the UHS basin. This is to assure adequate NPSH to the ESW pump.". Reason: Design of ESWS and UHS depend on site condition.
9.2-38 - 39	Section 9.2.5.2.2	Change: Add "UHS" to the 1st sentence of the 1st paragraph. Reason: Editorial change. Change: "ESW intake UHS basin" to "UHS basin" Reason: Description of typical ESWS and UHS in revised DCD is cooling tower type. ESW intake structure should be employed in one-through cooling type. Change: Add CDI brackets on sentence of "and then is cooled by the cooling tower before being returned to the basin. A portion of the water is discharged as blowdown water to maintain water chemistry via the ESWS when the makeup water is available. The blowdown rate is determined using a conductivity cell located at ESW pump discharge and is based on the total dissolved solids in the water and the makeup water source. The blowdown operation is terminated during accident mitigation or loss of make-up water". Reason: Design of ESWS and UHS depend on site condition. Change: Add CDI brackets on sentence of "Heat rejection to the environment is effected by direct contact with the cooling tower forced airflow, which provides evaporative cooling of the ESW return flow. During normal operation, evaporation, drift and blowdown losses are replaced with the makeup water. Water level controllers provided in each basin automatically open and close the makeup control valves." Reason: Design of ESWS and UHS depend on site condition.

Page	Location (e.g., subsection with paragraph/ sentence/ item, table with row/column, or figure)	Description of Change
		Change: Add CDI brackets on “basin” Reason: Design of ESWS and UHS depend on site condition. Change: “the combined inventory of three basins” to “the [[combined]] inventory [[of three basins]]” Reason: Design of UHS depends on site condition. Change: Add CDI brackets on sentences of “The ESW pump is designed to provide positive pressure at the spray nozzle headers. This, together with the high point vents, minimizes system drain down in the idle trains or upon loss of offsite power and subsequent pump trip.” Reason: Design of ESWS depends on site condition. Change: Add CDI brackets on sentence of “and CT riser and distribution piping.” Reason: Design of UHS depends on site condition.Change: Add CDI brackets on sentences of “The UHS transfer pumps are designed to transfer cooling water from a non-operating UHS basin to the operating UHS basins. The transfer pump and their associated components (e.g., piping, valves) are designed to Equipment Class 3, Seismic Category I and single failure criteria consistent with the UHS design bases.” Reason: Design of UHS depends on site condition. Change: Add CDI brackets on sentences of “The cooling tower fans are automatically activated by the emergency core cooling system (ECCS) actuation signal, the LOOP sequence actuation signal, or the remote manual actuation signal.” Reason: Design of cooling tower of UHS depends on site condition. Change: “to resume power to the active” to “to resume power to any acitve” Reason: Editorial change.
9.2-39 - 40	Section 9.2.5.2.3	Change: Delete “[a minimum of 30 years]”. Reason: Design of UHS depends on site condition. Change: Add CDI brackets on sentences of “A 2°F recirculation penalty is added to the maximum average wet bulb temperature.”

Page	Location (e.g., subsection with paragraph/ sentence/ item, table with row/column, or figure)	Description of Change
		Reason: Design of UHS depends on site condition. Change: Add CDI brackets on sentences of “(due to cooling tower drift and evaporation)” Reason: Planning of cooling system of UHS depends on site condition. Change: Add CDI brackets on sentences of “Total Evaporation (E) and Drift (D) rates were calculated using the ESW flow rate (GPM) times the temperature rise (CR) and a conservative cooling tower factor of 0.0009, E (total) = GPM x CR x 0.0009” Reason: Planning of cooling system of UHS depends on site condition.Change: Add CDI brackets on sentences of “a. The cooling tower factor of 0.0009 is considered conservative since it is based on standard cooling tower evaporation factor of 0.0008, and typical cooling tower drift rate of 0.0002. This is expressed as Total Evaporation (E) = GPM x CR x 0.0008 + GPM x 0.0002” Reason: Planning of cooling system of UHS depends on site condition. Change: Add CDI brackets on sentences of “b. The ESW temperature rise (CR) was based on heat rate equation of H as Heat Rate (H) = m x specific heat x CR, where, m = mass flow rate.” Reason: Planning of cooling system of UHS depends on site condition. Change: Add CDI brackets on sentence of “c. Accumulative evaporation (gallons/cooling tower) is calculated by multiplying the evaporation rate (gpm) and its corresponding time interval.” Reason: Planning of cooling system of UHS depends on site condition. Change: Add CDI brackets on “and drift” and “basin”. Reason: Design of UHS depends on site condition. Change: Delete “For this conceptual design”. Reason: Editorial change. Change: Add CDI brackets on “8.40 million gallons”. Reason: Design of UHS depends on site condition.

US-APWR DCD Revision 3 UTR 6 Change List

Page	Location (e.g., subsection with paragraph/ sentence/ item, table with row/column, or figure)	Description of Change
9.2-41	Section 9.2.5.5	Change: Add CDI brackets on sentence of "UHS transfer pump discharge pressure – local and MCR/RSC display". Reason: Design of UHS depends on site condition. Change: Add CDI brackets on sentence of "UHS transfer pump discharge flow rate – local and MCR/RSC display". Reason: Design of UHS depends on site condition.
9.2-64	Section 9.2.10	Change: Add CDI brackets on sentences of "*the source of makeup water to the UHS inventory and the blowdown discharge location*" Reason: Planning of cooling system of UHS depends on site condition. Change: Delete "at least 30 years" from the description of 9.2(22). Reason: Design of UHS depends on site condition.
9.2-71	Table 9.2.1-2 (Sheet 5 of 5)	Change: Add CDI brackets on the 1st row. Reason: Design of UHS depends on site condition.
9.2-89	Table 9.2.5-3	Change: The name of equipments of UHS and each design data are in CDI brackets. Reason: Planning of cooling system and design of UHS depends on site condition.
9.2-90 – 91	Table 9.2.5-4	Change: All of contents are in CDI brackets. Reason: Planning of cooling system and design of UHS depends on site condition.

GTGs with diverse starting system are provided as AAC sources. The auxiliary and support systems for the AAC GTGs are independent and separate from the Class 1E GTGs to minimize the potential for common mode failures.

- In the US-APWR design, power to the shutdown buses can be restored from the AAC sources within 60 minutes and, hence, a coping analysis for a duration of 60 minutes is performed.

- Until AAC GTG restores the Class 1E power system within one hour after an SBO occurs, all pumps and fans can not be operated. However, during this time period, the plant is in a condition similar to hot shut down. The turbine driven emergency feedwater pump (EFW) pump and the main steam relief valve remove decay heat so that the core and the reactor coolant system (RCS) are kept in a safe mode. RCP seal can keep its integrity for at least one hour without water cooling. The ~~all~~ Class 1E electrical cabinets and I&C cabinets can keep their integrity for at least ~~within~~ one hour without HVAC.

1.2.1.5.7 Main Control Room and Other Human-System Interface

The main control room (MCR) is designed to perform centralized monitoring and control of the instrumentation and control systems that are necessary for use during normal operation, abnormal transients, and accidents. Furthermore, the main control room boards are designed to reduce the potential for misoperation and misjudgment and to allow easy operation. The human-system interface (HSI) other than the MCR includes the remote shutdown console (RSC), local control stations such as the auxiliary equipment control console, the technical support center (TSC), and the emergency operations facility (EOF).

1.2.1.6 Site Characteristics

The US-APWR is a standard nuclear power plant designed to be constructed on a site, whose parameters are as described in DCD Chapter 2 (Site Characteristics), which are used as the basis for design certification. The allowable site interface parameters described in Chapter 2 are selected by MHI to bound most potential sites in the U.S.

The site-specific details of a US-APWR site plan is to be presented in the licensee's combined license application (COLA). A typical site plan has, however, been prepared by MHI and is shown in Figure 1.2-1.

The area within the perimeter fence of a US-APWR installation includes a site-specific portion of the facility. The control structure at the main gate controls site ingress and egress. As shown on the site plan, the main building structures are arranged with the R/B in the center and the other buildings clustered around the R/B to facilitate safe and efficient operation. The final configuration of the main cooling system is site-specific; however, the reference plant main cooling complex is of [[cooling tower]] ~~the once-through cooling~~ type. The unit's auxiliary transformers, reserve auxiliary transformer, and the main step-up transformers are located in the transformer area. The main switchyard area is site-specific.

2.4 Hydrologic Engineering

The US-APWR is designed for a maximum ground water elevation of 1 ft. below plant grade as well as a maximum level for flood or tsunami of 1 ft. below plant grade. The US-APWR is designed for a maximum local intense precipitation of 19.4 in./hr. The local intense precipitation is a measure of the extreme amount of water falling in the immediate vicinity of the site, taken as the one-square-mile probable maximum precipitation (PMP). Table 2.0-1 contains standard plant design input for hydrology.

The COL Applicant is to provide sufficient information to verify that hydrologic-related events will not affect the safety-basis for the US-APWR.

Non safety-related structures and certain safety-related structures whose flooding would not prevent safe operation of the plant need not be designed for the effects of high water or ice. Examples of safety-related structures that may not be adversely affected by flooding or icing include water intake structures and ultimate heat sink [basins].

2.4.1 Hydrologic Description

Major external hydrologic considerations for safety operation of the plant include both surface and subsurface sources. The hydrologic description includes the location, size, shape, and other hydrologic characteristics of streams, lakes, shore regions, and ground water environments influencing plant siting, and includes a description of existing and proposed water control structures, both upstream and downstream, that may influence conditions at the site.

2.4.2 Floods

The site-specific design of flood protection for safety-related components and structures of the plant is based on the highest calculated flood water level elevations and flood wave effects (site-characteristic flood) resulting from analyses of several different hypothetical causes. The site-specific design for local probable maximum precipitation demonstrates the capability of site drainage facilities to prevent flooding of safety-related facilities.

2.4.3 Probable Maximum Flood

The site-specific probable maximum flood (PMF) is based on the nearby streams and rivers contribution to the design basis flooding. Any reservoir and channel routing assumptions are addressed for site-specific impact, including coefficients and their bases with appropriate discussion of initial conditions, outlet works (controlled and uncontrolled), and spillways (controlled and uncontrolled).

A site-specific flood analysis also includes the translation of the estimated peak PMP discharge to elevation using applicable site profile and precipitation data.

2.4.4 Potential Dam Failures

A site-specific evaluation considers the potential hazard to the plant's safety-related facilities as a result of plausible failures of onsite, upstream, and downstream water

3.7 PLANT SYSTEMS

3.7.9 Ultimate Heat Sink (UHS)

~~[Not applicable to US-APWR Design Certification. Site specific information to be provided by COL Applicant.]~~

LCO 3.7.9 [[Three]] UHS [[cooling towers]] shall be OPERABLE [[including their associated fans and three OPERABLE transfer pumps.]]

APPLICABILITY: MODES 1, 2, 3, and 4.

ACTIONS

CONDITION	REQUIRED ACTION	COMPLETION TIME
A. [[One required cooling tower with associated cooling tower fans inoperable]]	A.1 [[Restore three cooling towers with associated fans to OPERABLE status.]] OR A.2 ----------NOTE---------- This Required Action is not applicable in MODE 4. ---------- Apply the requirements of Specification 5.5.18.	[[72 hours]] [[72 hours]]
B. [[One or more required]] UHS [[basins]] with water temperature not within limits.	B.1 Verify that water temperature of the UHS is [[≤93°F]] averaged over the previous 24 hour period.	Once per hour
C. One or more required UHS [[basins]] with water level not within limits.	C.1 Restore water level(s) to within limits.	72 hours

ACTIONS (continued)

CONDITION	REQUIRED ACTION	COMPLETION TIME
D. [[One or more required UHS transfer pump(s) inoperable.]]	D.1 [[Restore the transfer pump(s) to OPERABLE status.]] [[OR D.2.1 Implement an alternate method of basin transfer.]] [[AND D.2.2 Restore the transfer pump(s) to OPERABLE status.]]	[[7 days]] [[7 days]] [[31 days]]
E Required Action and associated Completion Time of Condition [[A, B, C, or D]] not met. [[OR UHS inoperable for reasons other than Condition A, B, C, or D]]	E.1 Be in MODE 3. AND E.2 Be in MODE 5.	6 hours 36 hours

SURVEILLANCE REQUIREMENTS

SURVEILLANCE		FREQUENCY
SR 3.7.9.1	Verify [[each]] required UHS [[basin]] water inventory~~level~~ is ≥ 2,800,000 gallons.	In accordance with the Surveillance Frequency Control Program

SURVEILLANCE REQUIREMENTS (continued)

SURVEILLANCE		FREQUENCY
SR 3.7.9.2	Verify water temperature of UHS is [[≤ 93°F]].	In accordance with the Surveillance Frequency Control Program
SR 3.7.9.3	[[Operate each cooling tower fan for ≥ 15 minutes.]]	In accordance with the Surveillance Frequency Control Program
SR 3.7.9.4	[[Verify each cooling tower fan starts automatically on an actual or simulated actuation signal.]]	In accordance with the Surveillance Frequency Control Program
SR 3.7.9.5	[[Verify each UHS transfer pump starts on manual actuation.]]	In accordance with the Surveillance Frequency Control Program
SR 3.7.9.6	Verify each UHS manual, power-operated, and automatic valve in the flow path servicing safety related equipment, that is not locked, sealed or otherwise secured in position, is in the correct position.	In accordance with the Surveillance Frequency Control Program
SR 3.7.9.7	Verify each UHS automatic valve and each control valve in the flow path that is not locked, sealed, or otherwise secured in position, actuates to the correct position on an actual or simulated actuation signal.	In accordance with the Surveillance Frequency Control Program

systems are maintained in the event of postulated incidents such as fires, floods, and high energy pipe break events.

Non-radioactive safety systems such as the ESWS, CCWS and electrical system, etc., are located in the plant southern area of the R/B. This area is also separated into four divisions by a physical barrier to assure that the functions of the safety-related systems are maintained in the event of postulated incidents such as fires, floods, and high energy line break events.

3.8.4.1.2 PS/Bs

The east and west PS/Bs are arranged adjacent to the R/B; one to the east and one to the west. These buildings are free-standing on a reinforced concrete basemat. Each building contains two emergency power sources and one alternate power source which are separated from each other by a physical barrier. In addition, the safety-related chillers are also located in these buildings.

Details of the design and analysis of the east and west PS/Bs are provided in Subsection 3.8.4.4.

3.8.4.1.3 ESWPT, UHSRS, PSFSVs, and Other Site-Specific Structures

The ESWPT is an underground seismic category I structure constructed of reinforced concrete. Terminating in part under the T/B, the structure is isolated from other structures to prevent any seismic interaction. The other termination point is the UHSRS at the source of the ESWS. The UHSRS consist of a[[cooling tower enclosure]] ESWS pump houses, and the UHS [[basin]]. The PSFSVs are underground structures which house the safety-related and non safety-related fuel oil tanks.

The design and analysis of the ESWPT, UHSRS, PSFSVs, and other site-specific structures are to be provided by the COL Applicant based on site-specific seismic criteria.

3.8.4.1.4 Heating, Ventilating and Air Conditioning Ducts and Duct Supports

Seismic category I HVAC ducts and duct supports are routed as necessary to supply safety-related functions of air distribution. Appendix 3A describes the qualification of HVAC ducts and duct supports.

3.8.4.1.5 Conduits and Conduit Supports

Seismic category I conduits and conduit supports are routed as necessary to supply safety-related Class-1E cable. The conduit consists of a metal wall of minimum thickness as specific, and is assembled using standard industry fittings and clips. Appendix 3F describes the qualification of conduits and conduit supports.

3.8.4.1.6 Cable Trays and Cable Tray Supports

Seismic category I cable trays and cable tray supports are routed as necessary to supply safety-related Class-1E cable. Cable trays are manufactured using thin-gauge steel channels, and supports are constructed using cold formed or rolled steel shapes. Appendix 3G describes the qualification of cable trays and cable tray supports.

9.2 Water systems

9.2.1 Essential Service Water System

The essential service water system (ESWS) provides cooling water to remove the heat from the component cooling water (CCW) heat exchangers (HXs) and the essential chiller units. The ESWS transfers the heat from these components to the ultimate heat sink (UHS). The UHS is described in Subsection 9.2.5.

~~The following subsections contain conceptual design information enclosed in brackets and are outside the scope of the standard design, thus shall not be incorporated by reference in the COLA.~~

9.2.1.1 Design Bases

The ESWS operates during all modes of plant operation and performs safety-related as well as non-safety related functions. The ESWS is designed to meet the relevant requirements of GDC 2, GDC 4, GDC 5, GDC 44, GDC 45, and GDC 46 (Ref. 9.2.11-1).

9.2.1.1.1 Safety Design Bases

The ESWS is designed to the requirements of the overall US-APWR plant design criteria. Specific safety design bases for the ESWS are as follows:

- The system is capable of transferring heat loads from safety-related SSCs to the UHS during normal operating and accident conditions, including LOCA, pursuant to the requirements of GDC 44.

- The system, in conjunction with the plant UHS, is designed to remove heat from the plant auxiliaries required to mitigate the consequences of a design basis event and for safe shutdown, assuming a single failure and one train unavailable due to maintenance coincident with a loss of offsite power pursuant to the requirements of GDC 44.

- ESWS is designed to equipment Class 3 and seismic category requirements, and as such it is designed to remain functional during and following an SSE per RG 1.29.

- The system is designed considering the protection against adverse environmental, operating, and accident conditions that can occur, such as freezing, thermal overpressurization, and water hammer per RG 1.206.

- The system is designed to detect and preclude uncontrolled release of radioactive contaminants to the environment. Radioactive contaminants may enter the ESWS from the component cooling water system (CCWS).

- Measures to prevent long-term corrosion and organic fouling in the ESWS are considered pursuant to the requirements in SRP 9.2.1 and RG 1.206.

~~nonsafety-related, e. g., sections of pipe in heat exchanger drain piping after the isolation valves. These boundary isolation valves which provide separation between the safety-related and nonsafety-related portions are normally closed. During a design basis event, postulated simultaneous failure of all nonsafety-related piping would not impact operation of any ESW train and would not affect ESWS capability to perform its safety functions. The COL Applicant is to address site specific nonsafety-related system isolation (intake basin blow down system, intake basin make up water system) as applicable.~~

9.2.1.2 System Description

9.2.1.2.1 General Description

Figure 9.2.1-1 shows the piping and instrumentation diagram of the ESWS. The ESWS draws water from the UHS~~intake~~ [[basin]] and returns the effluent water to the UHS after passing through the CCW HXs and the essential chiller units. ~~The UHS, which is usually a freshwater (or saltwater) source, is the source of water to the intake basin.~~ It follows that the ESWS cooling water does not contain radioactive materials nor release radioactive contaminants to the environment. The essential chiller units also do not include ~~the~~any radioactive fluid. ~~, and~~The CCWS is the intermediate loop between the reactor auxiliaries and the ESWS. This arrangement minimizes direct leakage of ~~the~~ radioactive fluid from the ESWS to the environment. Nevertheless, the CCW plate heat exchangers are constructed to prevent intermixing of the fluids from both sides so that any leakage will go to the outside of the heat exchanger except when a hole is developed in the plates—a rare event with titanium plates. Gasket failure directs leakage towards the outside of the CCW heat exchanger, hence radioactive contamination of the ESWS propagating to the UHS and ultimately to the environment is not considered credible. Any leakage from the CCW heat exchangers is collected into the nonradioactive floor drains thus ensuring that no ESWS water is released directly to the environment. For conservatism, however,~~In addition,~~ radiation monitors are provided in each discharge line of the CCW HX essential service water (ESW) side. See also the description of these monitors in DCD Subsection 11.5.2.2.2. Radiation alarms are provided to ~~The monitors~~ alert the operator if radioactive ~~the~~ leak~~ing~~age from the CCW side has entered the ESW side. ~~contains radioactivity so that t~~The operator ~~can~~then isolates the leaking train to prevent uncontrolled radiation contamination of the ESWS and UHS. Prior to any radiation leakage being detected in the ESWS, however, radiation alarms in the CCWS side would have already alerted the operators of contamination in the CCWS. The affected CCWS train is immediately isolated followed by the isolation of the aligned ESWS to prevent possible contamination of the UHS and the environment. A local grab sampling line is installed downstream of the CCW heat exchanger to determine any trace amounts of radioactivity prior to release to the UHS. ESW discharge sampling is performed periodically. [[For discharge to cooling towers, the ESW is sampled prior to blowdown releases.]]~~.~~

The ESWS is arranged into four independent trains (A, B, C, and D). Each train consists of one ESWP, two 100% strainers in the pump discharge line, ~~one 100% strainer upstream of the CCW HX,~~ one CCW HX, one essential chiller unit, and associated piping, valves, instrumentation and controls. This arrangement assures that failures and postulated events in one train do not affect the safety-related functions of the other trains.

During normal ESWS operation, at least two trains out of four are required to be operable to meet the safety-related design requirements. During accidents and other design basis events, such as a LOCA or safe shutdown with a LOOP, a postulated single active component failure in one train coincident with on-line maintenance in another train do not prevent the ESWS from performing its safety-related functions with the two remaining operable trains. Instrumentation is also provided independently and not shared among the trains.

Each supply line after the strainer is tapped to supply cooling water to each component. Each CCW HX is provided with piping and isolation valves around the heat exchanger~~,~~ which facilitates back flushing of the CCW HX of the ESW side when required. Heat from the reactor auxiliaries is removed from the CCW HX and the heated service water flows to the UHS via independent lines. The ESW flow of 13,000 gpm is maintained at all operating conditions, including accident conditions and safe shutdown with a LOOP. The ESWS is designed to operate at a water temperature as low as 32° F. For the ESWS piping and components in the R/B and PS/B, freezing of the ESW in the standby trains is precluded by the HVAC system operating between 50° F and 105° F. [[Piping running through tunnels and trenches are below grade so that freezing of the ESW is not a concern. Stagnant and exposed portions of the system are heat traced to ensure that the ESW inside these structures is maintained above 32° F.]]

The ESW piping from the pump discharge after passing through the discharge strainers ~~drops underground and~~ runs to the PS/Bs and reactor building through the~~. The~~ ESW tunnels ~~near the building are located at -26' 4'' elevation~~. After serving the CCW HXs and the essential chiller units ESW piping runs to the UHS.

The COL applicant is to determine the piping layout of the UHS to maintain the ESWS/UHS pressure above saturation pressure for all operating modes. [[The piping layout of the UHS maintains the ESWS/UHS system pressure downstream of the pump discharge check valve above their saturation pressure at 140° F design temperature by ensuring that no piping high points are above the cooling tower spray header.]] This prevents potential void formation during pump stoppage. During pump operation, due to the addition of the dynamic head to the static head, the ESWS/UHS system pressure will be above saturation pressure.]~~The ESWPs are sized to provide positive pressure at the highest point in the system. The system is designed for 140° F.~~ The system layout and the design assure that the fluid pressure remains above saturation conditions at all locations during all modes of operation.

~~The ESWS layout ensures that the fluid pressure in the system is above saturation conditions at all locations.~~ The ESWS layout, in combination with the motor-operated valves (MOVs) at the discharge of each ESWP, minimizes the potential for transient water hammer. The starting logic of the ESWP interlocks the operation of the motor operated valve with the pump operation. [[~~The v~~Voiding in any train due to potential ESW drain down through the cooling tower spray nozzles may occur ~~on~~ during loss of offsite power and subsequent pump trip.]] To preclude water hammer on pump re-start, the MOV at each pump discharge is interlocked to close when the pump is not running or is tripped. This interlock prevents the pump from starting if the valve is not closed except during emergency situations such as an accident or LOOP events. Upon receiving the

pump actuation signal such as an ECCS actuation or LOOP sequence signal~~. After a predetermined time delay after the pump starts~~, the MOV starts to gradually open to preclude water hammer. The ESWP and ESWP discharge MOV interlock is overridden by either the ECCS actuation or LOOP sequence signal. If the valve fails to open, the train may be placed out of service since the loss of one train will not affect any plant safety functions as shown Table 9.2.1.2. ~~the pump is tripped~~ and alarm~~ed~~ is sent to ~~in~~ the MCR. The short time duration during which the pump is dead headed is not detrimental for ~~long term~~ pump performance and the pump can be manually tripped.

~~The CCWHXs and the essential chiller units are located at floor elevation (- 26' 4'') in the reactor building. The ESWPs and ultimate heat sink which is site dependent will be located at grade elevation. This arrangement assures that all points in the system remain above atmospheric pressure.~~

The COL Applicant is to develop ~~procedures for~~ system filling, ~~and~~ venting, keeping the system full, and operational procedures to minimize the potential for water hammer~~;~~, to analyze the system for ~~inadvertent~~ water hammer ~~events~~impact~~,~~; to design the piping system to withstand the potential water hammer forces~~,~~; and to analyze inadvertent water hammer events, in accordance with NUREG-0927~~develop procedures to minimize the impact of these forces~~.

~~The ESWS system design assures that the CCW HX operating pressure on the ESW side is not higher than the CCWS operating pressure.~~ The ~~us,~~construction of the CCW plate heat exchangers prevents any leakage ~~is~~ from either the CCW side or ~~to~~ the ESW side from contaminating each other~~S~~. Therefore, the raw service water do~~s~~es not contaminate the demineralized CCW nor does the potentially ratioactive CCW contaminate the ESW. The ESWS interfaces with the UHS system ~~which is~~are further described in Section 9.2.5. Type and location of the UHS ~~is~~are site specific. The COL Applicant's ~~is to assure that~~ selection and design of the UHS to deliver the design ~~supplies~~ water flow rate to the ESWS does not exceed the ~~at a~~ maximum design temperature of 95°F under all operating conditions to assure sufficient cooling capacity. The UHS design also assures the cooling water inventory for a minimum of 30 days without make-up to mitigate the consequences of a design basis event. The COL Applicant is to design the ~~ESW intake structure or~~ UHS [[basin]] such that the minimum water level ~~(~~after a 30-~~-~~day emergency operation~~)~~ will provide adequate NPSH to the ESWPs under accident conditions.

Bio-fouling and chemistry control of the ESWS ~~is~~are site specific and depend~~s~~ upon the type of UHS. The COL Applicant is to specify the following ESW chemistry requirements.

- A chemical injection system to provide non-corrosive, non-scale forming conditions to limit biological film formation
- The type of biocide, algaecide, pH adjuster, corrosion inhibitor, scale inhibitor and silt dispersant based on the site conditions

[[As part of the water chemistry management program for the~~of a plant that utilizes~~ cooling towers and basins ~~as the ESWS water source~~, an ESWS blowdown line is installed at the ESWP discharge piping. Part of the pumped ESW is blown down to

remove a portion of the accumulated chemical salts and dissolved solids per site environmental chemistry requirements while the UHS makeup system is in operation. Details are given for blowdown and UHS basin water makeup in Section 9.2.5.]]

The COL Applicant is ~~to develop operating procedures~~ to verify system layout ~~and performance~~ of the ESWS and UHS and is to develop operating procedures to assure that the ESWS and UHS ~~is~~are above saturation conditions ~~throughout the system~~for all operating modes.

The COL applicant is to develop maintenance and test procedures to monitor debris build up and flush out debris.

~~The COL Applicant is to provide the piping, valves and other design related to the site specific UHS.~~

9.2.1.2.2 Component Description

Table 9.2.1-1 shows the design parameters of the major components in the system.

9.2.1.2.2.1 ESWPs

Four 50% capacity ESWPs, one per train, supply cooling water to remove heat from the recipient components, and then discharge the heated water to the UHS. Approximately 12,043 gpm ESWP flow is required for all modes of plant operation as indicated in the DCD Table 9.2.1-4. This provides approximately 7.7 percent margin to the design ESWP flow rate of 13,000 gpm. The margin allows for pump and heat transfer degradation by fouling, leakages, excessive pressure drop across system components or, fluctuations due to supplied electrical frequency.

The pumps are powered from the Class 1E ~~normal~~ ac power system. On loss of offsite power, the pumps are automatically powered from their respective emergency power source.

Each pump is designed to provide 13,000 gpm flow at the required total dynamic head. The required pressure drop across the ESWS components and piping (within standard plant design scope) is approximately 100 feet. The COL applicant is to determine the required ESWP TDH by adding pressure drop across the site specific components and piping and maximum static lift to this pressure drop. The COL Applicant is to provide the site specific data for the ESWPs and assure that the selected ESWP will require less NPSH than the minimum available NPSH under all operating conditions. The COL Applicant is to assure that the sum of the shut-off head of the selected ESW pumps and the static head will not result in exceeding the ESWS design pressure. The UHS level is based on the 30-day emergency cooling at design basis accident heat loads, pump(s) operating at design flow rates with maximum cooling water temperature of 95° F. The potential for vortex formation is evaluated and the available NPSH computed using these parameters. The COL Applicant is to evaluate the potential for vortex formation based on the most limiting assumptions that apply (e.g., temperature, flow rate, operation of other pumps for vortex evaluation).

~~These strainers filter out most of the debris and thus provide adequate protection for ESWS components.~~

~~One 100% capacity self-cleaning type strainer is located upstream of each CCW HX. The strainer is continuously blown down at a rate of 500 gpm to prevent buildup of impurities and clogging of the CCW HXs. The blowdown water is discharged downstream of the CCW HXs.~~ The automatic strainers have a 3 mm mesh which is considered to effectively remove debris from the system that could clog the CCW plate heat exchangers with flow passages approximately 3~6 mm in diameter. Since the essential chiller units, being shell and tube type heat exchangers, have a much larger flow path than the CCW heat exchangers, ~~N~~no strainer ~~is provided~~ for ~~essential chller unit coolers since filtration is provided by the ESWP discharge pipe strainers and~~ additional filtering is ~~not~~ deemed necessary. [[The 3mm mesh of the strainer element also assures that potential clogging of the cooling tower nozzles is avoided.]]

The ESWP discharge strainers are designed per ASME Boiler and Pressure Vessel Code Section III, Division I, Subsection ND - Class 3 Components and ASME NQA-1 – Quality Assurance Requirements for Nuclear Facility Applications.

The COL Applicant is to provide the design details of the strainer backwash line, vent line, and their discharge locations.

9.2.1.2.2.3 CCW HX

Four 50% capacity plate type HXs, one per train, are provided. A detailed description of the HXs is given~~discussed~~ in Subsection 9.2.2.

A backflushing line is provided for each CCW HX to enable backflushing of the heat exchanger following a high differential pressure alarm that may likely be caused by accumulation of debris materials inside the heat exchanger plate flow channels.

9.2.1.2.2.4 Essential Chiller Units

Four 50% capacity chiller units, one per train, are provided. A detailed description of the essential chiller units is given in Subsection 9.2.7.

9.2.1.2.2.5 Piping

Carbon steel piping designed, fabricated, installed and tested in accordance with ASME Section III, ~~c~~Class 3 requirements, is used for the safety-related portion of the ESWS. Piping is arranged to permit access for inspection. ~~Underground piping is epoxy lined carbon steel and placed in trenches. Manholes are provided for periodic piping inspection.~~The essential service water pipe tunnel (ESWPT), including the ESW piping from this tunnel to the ESW pump intake and discharge structures and the UHS, is site specific but the existence and function of which are required in the standard design. The COL applicant is to locate the pipes entering and exiting the pipe tunnel based on the location of the UHSRS, as required. [[The piping located in trenches will be externally lined carbon steel and the lining material specification will vary according to the site soil chemistry. The rest of the ESWS piping will be carbon steel or internally lined carbon

steel depending on ESWS water chemistry requirements. Cathodic protection will be provided for buried piping. Access manholes will be provided as required for periodic inspection.]] The piping will be inspected per ASME Section XI, article IWA 5244 requirements.

9.2.1.2.2.6 Valves

The water in the ESWS does not normally contain radioactivity and, therefore, special provisions against ~~the~~ leakage to the atmosphere are not necessary. Isolation valves are provided upstream and downstream of each component to facilitate its removal from service.

~~The~~ A motor operated valve is provided at the discharge of each pump. The starting logic of the ESWP interlocks the motor operated valve with the pump operation. The closed discharge valve opens after starting the ESWP. This feature minimizes transient effects that may occur as the water sweeps out air that may be present in the system. If the motive power of the valve is lost, the valve maintains its ~~open~~current position.

Each CCW HX is provided with two separate locked closed isolation valves and piping around the heat exchanger for back flushing. One valve is located in the piping running from the inlet of the heat exchanger inlet isolation valve to the inlet of the heat exchanger discharge isolation valve, and the second valve is located in the piping running from the outlet of the heat exchanger inlet isolation valve to the outlet of the heat exchanger discharge isolation valve. To initiate back flush operation, both bypass valves are opened and the heat exchanger isolation valves are closed. Cooling water flows from the discharge side into the heat exchanger and is discharged from the heat exchanger inlet side to the ESW discharge line.

To avoid concerns with potential downstream pipe wall thinning, butterfly valves provided in the ESWS piping are not used for excessive throttling of the water flow. The valves are sized such that they are near the full open position during the various modes of plant operation. Valve opening margins are included to ensure that the design flow is met during all plant operating modes. Restriction orifices are provided downstream of the heat exchangers as required for flow balancing. Orifices having adequate differential pressures are installed downstream of the heat exchangers to prevent excess throttling of the butterfly flow control valves.

9.2.1.2.2.7 Deleted

9.2.1.2.3 System Operation

9.2.1.2.3.1 Normal Operation

The ESWS consists of four independent trains. During normal plant operation, two trains are operating and at least one other train is on standby. Each train is designed to provide 50% of cooling capacity required for design basis accident and for safe shutdown with LOOP. The ESWS is designed to perform its safety function of removing heat from the CCW heat exchangers and essential chiller units for accident mitigation and during safe shutdown ~~assuming that~~ with one train assumed ~~is~~ out of service ~~for~~ due to maintenance

void formation which leads to water hammer, vacuum breakers shall be installed between the pump discharge and its check valve. Air entering the piping cushions any abrupt water flow filling the voids and water hammer will not take place at pump actuation. The entering air then discharges through the automatic vent valve installed in the strainer. The motor-operated pump discharge valve, being powered by a DC power source, is unaffected by the loss of offsite power and will close when the pump stops. [[Water in the cooling tower spray header ~~downstream of the high point in the CCW heat exchanger discharge pipe~~ will drain to the UHS.]] The check valve located in the pump discharge pipe will prevent water flowing back through the pump into the intake structure. In order to preclude water hammer on pump restart, the motor operated valve at the discharge of each pump is interlocked to close when the pump is not running or is tripped. This interlock prevents the pump from starting if the valve is not closed. When the emergency electrical power becomes available from the gas turbine generators (GTGs), the ESW pump is restarted in accordance with the LOOP sequence (or blackout sequence) signal and the discharge MOV opens. Since most of the ESWS remains filled with water, the ESW pump restart will sweep out the trapped air via high point vents attached at the ESWP discharge strainers. Therefore, any potential water hammer forces, if present, will have minimum impact on the ESWS operation. The COL applicant is to provide a void detection system with alarms to detect system voiding.

Draining of ESW in an inactive or tripped ESWS train is prevented by double isolation valves downstream of the ESWP, i.e. check valve and MOV. The differential pressure measured during leakage testing of these valves is established in accordance with the MSS SP-61-1999, Pressure Testing of Steel Valves, is equal to the design pressure. Actual differential pressure of the MOV is equal to the static pressure which is lower than the pressure at testing with the pump in standby or tripped. Actual differential pressure across the check valve installed upstream of the MOV is low because the system pressure tends to work against the MOV, therefore, almost no leakage can be anticipated. The MOV and the check valve are identified in DCD Table 3.9-14 with their safety function in “maintain closed” position. The IST program with detailed criteria including valve leak rates shall be prepared by the COL applicant in accordance with COL 3.9(8). ~~Potential voids caused by insufficient venting may be formed in the ESWS lines.~~ Inservice testing of the ESWS, as described in Tier 2 DCD Subsection 3.9.6.~~2~~1, includes ~~periodic testing of the high points in the ESWS and~~ discharg~~e~~ing of any voids into the UHS [[basins]] and filling of the system to~~. These tests~~ ensure that voids ~~and unacceptable dynamic effects like~~which are the primary cause of water hammer are minimized.

The effect of long-term corrosion of the piping is mitigated by adding a corrosion inhibitor. The ESW is periodically sampled and chemicals are added, as required, during normal operation.

Radioactivity leakages from the CCWS to the ESWS can be detected by the radiation monitors located downstream of the CCW heat exchangers. Predetermined high radiation level is alarmed in the MCR. The operator manually isolates the contaminated ESWS train and corresponding CCW train by stopping the ESWS and CCW pumps, and thus taking the contaminated CCW heat exchanger out of service. Standby CCWS and ESWS trains are placed in service. The manual isolation valves placed on each side of the CCW heat exchanger will also be closed to ensure that the radioactive leakage is not circulated

- Section 3.7, Seismic Design;

Pipe rupture protection is addressed in Section 3.6, Protection against Dynamic Effects Associated with Postulated Rupture of Piping.

The ESWS continues to perform its safety function in the event of a fire. Subsection 9.5.1 addresses fire protection.

Leakage in the ESWS due to piping or component failure that could cause flooding of surrounding SSCs has been evaluated for the CCW pump and CCW HX room. Flooding mitigation in the ESWS is achieved by installation of a nonsafety grade electrode type level switch or detector in the leak-detecting floor drain box in the CCWP and CCW HX room of each train. Pre-determined water level due to leakage in any CCWP and CCW HX room is alarmed in the MCR. A nonsafety grade electrode type level switch is also provided in the leak-detection floor drain box in each essential chiller unit room located in the power source building (PS/B). Pre-determined water level due to leakage in any essential chiller room is alarmed in the MCR. The leaking train can also be identified by low outlet flow from each CCW HX or decrease in the ESWS header pressure.~~Flooding and flooding effects in the ESWS are mitigated due to the physical separations in the reactor building such as watertight doors. These doors are monitored and controlled during plant operation and maintenance. Each CCW pump & CCW HX room has a leak-detecting floor drain box with electrode type level switch to provide alarm in the MCR for the detection of a leaking train from the ESWS or CCWS. A common alarm in the MCR provides audible indication of a leak or flooding. A method of identifying a leaking ESWS train by an operator who recognizes leakage of the ESWS in either side of R/B through the above alarm from the CCW pump & CCW HX room will be the indications from the inlet pressure and outlet flow of the CCW HX and essential chiller units.~~ The leaking ESWS and CCWS trains ~~is~~are then isolated by shutting down the corresponding ESWS pump and CCWS pump, and activating the standby and intact ESWS and CCWS trains. If, however, the leak detector fails to alarm, or the operator fails to recognize the flooding signals, the physical separations, which include water tight doors, between the east side of the ESWS enclosing ESWS trains A and B and the west side of the ESWS enclosing ESWS trains C and D will serve to isolate flooding and prevent it from propagating to other trains.

The ESWS equipment and piping are located ~~either underground or in the pump house and~~ in the R/B, the UHSRS, the ESWPT, and the PS/Bs. These buildings are designed to withstand the effects of earthquakes, tornadoes, hurricanes, floods, external missiles and other appropriate natural phenomena. Sections 3.3, 3.4, 3.5, 3.7, 3.8 and 9.5 describe the bases of the structural design and protection from natural events.

Radioactive contamination of the ESWS is unlikely but can occur if the CCWS system is contaminated and then leaks into ESWS via the CCW HX. Subsection 9.2.1.2.1 describes prevention of this leakage to the environment.

Four independent, redundant trains, each powered from an independent Class 1E power supplies, are provided. The system is designed to provide the required cooling to

mitigate the consequences of an accident with a single failure and one train unavailable due to maintenance coincident with a loss of offsite power.

The ESWS and its components are initially tested in accordance with the program given in Section 14.2. Periodic in-service functional testing is performed as described in Subsection 9.2.1.4. Section 6.6 lists appropriate ASME Section XI requirements for the safety-related portion of the system.

Failure mode and effects analysis (FMEA) Table 9.2.1-2 concludes that no single failure, coincident with one train being unavailable due to maintenance and a loss of offsite power compromises the safety functions of ESWS.

The ESWS is not shared with multi-units.

The COL Applicant is to provide the evaluation of the ESWP at the lowest probable water level of the UHS. The COL applicant is to develop recovery procedure in the event of approaching low water level of UHS.

The ESWS is designed for operation at low water temperature of 32° F during all modes of plant operation. The COL Applicant is to provide ~~the~~ protection of the site specific portions of the ESWS [[such as the ESWS blowdown line, FSS supply line, ESWPT piping ~~towards the intake and discharge structures, i.e. piping~~ running between the nuclear island and UHSRS, and any ESWS piping in the UHSRS]] against adverse environmental, operating, and accident conditions that can occur such as freezing, low temperature operation, and thermal overpressurization. ~~The COL Aplicant is to provide the preventive measures for protection against adverse environmental conditions.~~

The COL Applicant is to provide the safety evaluation of the capability of the ESWS to: (1) isolate its site-specific, nonsafety-related portions [[such as the ESWS blowdown line and FSS supply line when applicable]]; and (2) provide measures to prevent long-term corrosion and organic fouling that may degrade its performance, per Generic Letter (GL) 89-13.~~for the ESWS design related to the site specific conditions.~~

Some portions of the system are nonsafety-related, e. g., sections of pipe in heat exchanger drain piping after the isolation valves. These boundary isolation valves which provide separation between the safety-related and nonsafety-related portions are normally closed. During a design basis event, postulated simultaneous failure of all nonsafety-related piping would not impact operation of any ESWS train, thus will not affect the ESWS capability to perform its safety related functions.

The COL applicant is to specify appropriate sizes of piping and pipe fittings such as restriction orifices to prevent potential plugging due to debris buildup, and develop maintenance and test procedures to monitor debris build up and flush out debris.~~The COL Applicant is to provide the UHS water volume, maximum operating water temperature and the lowest water level for ESWPs~~

9.2.1.4 Inspection and Testing Requirements

- A pressure transmitter located on the discharge of the potable water system pumps controls the stop/start sequence of the pumps.
- Instrumentation is provided for the continuous operation of the jockey pump to maintain system pressure during low-flow requirement periods.
- Instrumentation is provided for indication and for automatic potable water system pump start if the jockey pump fails to maintain system pressure.
- Instrumentation necessary for proper operation of all three pumps to satisfy the system distribution flow rates and to maintain an acceptable system pressure is provided.

9.2.5 Ultimate Heat Sink

The ultimate heat sink (UHS) consists of an assured source of water with associated safety-related structures designed to dissipate the heat rejected from the ESWS during normal and accident conditions. UHS peak heat loads and long term heat loads are shown in Tables 9.2.5-1 and 9.2.5-2, respectively. The UHS system is safety-related and designed to meet the requirements of Regulatory Guide 1.27 (Ref. 9.2.11-2).

~~The following subsections contain conceptual design information enclosed in brackets and are outside the scope of the standard design, thus shall not be incorporated by reference in COLA.~~

9.2.5.1 Design Bases

~~The UHS is designed to dissipate the maximum possible total heat load, including that of a LOCA under the worst combination of adverse environmental conditions, even freezing, and cool the unit for a minimum of 30 days (or 36 days for cooling pond in accordance with Regulatory Guide 1.27) without makeup water. The UHS is designed for a single nuclear power unit and is not shared between units.~~The UHS is a site-specific interface with the ESWS. The design information provided in this subsection establishes interface requirements applicable to the UHS design and to be provided by the COL applicant based on specific site characteristics including meteorological data.

The UHS designed in accordance with GDC 44~~ bases~~ to~~ meet the safety-related functional requirements are provided below~~:

- Dissipate the maximum total heat load from the ESWS under normal and accident condition, including that of a LOCA or safe shutdown scenario with LOOP under the worst combination of adverse environmental conditions, even freezing, and cool the unit for a minimum of 30 days (or minimum of 36 days for cooling pond) in accordance with Regulatory Guide 1.27 without makeup water. The decay heat is estimated using ANSI/ANS 5.1, “Decay Heat Power for Light Water Reactors” (Ref. 9.2.10-6).

The COL Applicant is to design the UHS to receive its electrical power supply, if required by the UHS design, from safety buses so that the safety functions are maintained during LOOP. [[The UHS receives its standby electrical power from the onsite emergency power supplies during a LOOP.]]

A typical UHS interface with ESWS is shown in Figure 9.2.1-11. The COL Applicant is to provide a detailed description and drawings of the UHS, including water inventory, temperature limits, heat rejection capabilities under limiting conditions, instrumentation, and alarms.

The COL Applicant is to determine [[the normal source of makeup water to the UHS inventory and the blowdown discharge location]] which are in operation at any time before the start of the 30-day emergency cooling during an accident or safe shutdown with Loop. The [[blowdown]] discharge is provided as a check point for monitoring and neutralizing chemistry of ESW discharges to the environment.

The COL Applicant is to determine source and location of the UHS.

The COL Applicant is to determine location and design of the ESW intake structure.

The COL Applicant is to determine location and design of the ESW discharge structure.

9.2.5.2.1 General Description

[[The UHS consists of four 50 percent capacity mechanical draft cooling towers, one for each ESWS train, and four 33 and one-third percent capacity basins.]] The COL Applicant's design will assure sufficient water inventory to satisfy the cooling water supply criteria of RG 1.27.

[[Each cooling tower consists of two cells with fans and motors, drift eliminators, film fills, risers, and water distribution system all enclosed and supported by a seismic category I reinforced concrete structure. Cooling tower components are designed per equipment Class 3 and quality group C requirements.]]

[[The fan motors are powered from the Class 1E ac power buses. On loss of offsite power (LOOP), the motors are automatically powered from their respective division's emergency power source, i.e. the Class 1E gas turbine generators (GTG).]]

UHS [[cooling tower]] design water flow rate and ~~[hot (inlet)] water temperature are specified to maintain the~~ [cold [[~~(~~outlet~~)~~]] water temperature to ESWS are less than or equal to 95 ºF under design basis heat load conditions.

As noted in Subsection 5.4.7.1, "Design Bases," and Subsection 5.4.7.3, "Performance Evaluation," with ESW water temperature of 95° F, the RHRS is capable of reducing the reactor coolant temperature from 350° F to 200° F within 36 hours after shutdown.

[[The cooling towers utilize the basins for structural foundation. The ESW intake basin located underneath the ESW pump house occupies a corner of the UHS basin. The ESW

intake basin is deeper than the UHS basin. This is to assure adequate NPSH to the ESW pump.]]

[The UHS design concept described herein is depicted in Figure 9.2.5-1. The UHS design and process parameters are provided in Table 9.2.5-3.]

9.2.5.2.2 System Operation

[Each ESWP takes suction from its ~~ESW intake~~ UHS [[basin]] located beneath the pump house as described in Subsection 9.2.5.2.1. The water flows through the CCW heat exchangers and essential chiller units [[and then is cooled by the cooling tower before being returned to the basin. A portion of the water is discharged as blowdown water to maintain water chemistry via the ESWS when the makeup water is available. The blowdown rate is determined using a conductivity cell located at ESW pump discharge and is based on the total dissolved solids in the water and the makeup water source. The blowdown operation is terminated during accident mitigation or loss of make-up water]].

[[Heat rejection to the environment is effected by direct contact with the cooling tower forced airflow, which provides evaporative cooling of the ESW return flow. During normal operation, evaporation, drift and blowdown losses are replaced with the makeup water. Water level controllers provided in each basin automatically open and close the makeup control valves.]] Low and high water level are annunciated in the main control room (MCR).

The maintained water level in each UHS [[basin]] assures adequate NPSH for the ESWP under all operating modes. Assuming one train is out of service for maintenance and the source of makeup water is unavailable for a period of thirty days after the accident, the [[combined]] inventory [[of three basins]] provides a thirty-day cooling water supply.

The ESWS together with the UHS are designed, arranged and operated to minimize the effects of water hammer forces. The system layout assures water pressure remains above saturation conditions throughout the system. High point vents and low point drains are provided. [[The ESW pump is designed to provide positive pressure at the spray nozzle headers. This, together with the high point vents, minimizes system drain down in the idle trains or upon loss of offsite power and subsequent pump trip.]]

[The following features preclude or minimize water hammer forces:

- On loss of off-site power (LOOP), the discharge MOV of the operating train is closed by DC power. This, together with the pump discharge check valve, prevents draindown to the [[basin]].
- The ESW pump start logic interlocks the discharge MOV operation with the pump operation. The re-start of the tripped pump or start of the stand-by pump opens the discharge valve slowly, sweeping out voids from the discharge piping [[and CT riser and distribution piping]].
- The system valve lineup and periodic inservice testing of the idle trains, including high point venting, help minimize potential voids and water hammer forces.]

[[The UHS transfer pumps are designed to transfer cooling water from a non-operating UHS basin to the operating UHS basins. The transfer pump and their associated components (e.g., piping, valves) are designed to Equipment Class 3, Seismic Category I and single failure criteria consistent with the UHS design bases.]]

[[The cooling tower fans are automatically activated by the emergency core cooling system (ECCS) actuation signal, the LOOP sequence actuation signal, or the remote manual actuation signal.]]

The ECCS actuation signal ensures continuous cooling to the reactor during accidents. [The LOOP sequence actuation signal automatically starts the Class 1E gas turbine generators (GTGs) to resume power to any~~the~~ active components in each UHS train during LOOP events.]

Operational details of the ESWS are provided in Subsection 9.2.1.

9.2.5.2.3 System Performance

The UHS is designed with sufficient inventory to provide cooling for at least 30 days following an accident with no makeup water. The UHS must be capable of dissipating the design bases heat loads under the worst environmental conditions that minimize heat dissipation without exceeding the maximum ESW supply temperature of 95°F.

The wet bulb design temperature is based on ~~[a minimum of 30 years]~~ of climatological data in accordance with RG 1.27. [[A 2°F recirculation penalty is added to the maximum average wet bulb temperature.]]

The required total water usage [[(due to cooling tower drift and evaporation)]] over the postulated 30 day period] is determined using industry standard methodology as follows:

[[Total Evaporation (E) and Drift (D) rates were calculated using the ESW flow rate (GPM) times the temperature rise (CR) and a conservative cooling tower factor of 0.0009, E (total) = GPM x CR x 0.0009]].

[[a. The cooling tower factor of 0.0009 is considered conservative since it is based on standard cooling tower evaporation factor of 0.0008, and typical cooling tower drift rate of 0.0002. This is expressed as

Total Evaporation (E) = GPM x CR x 0.0008 + GPM x 0.0002]]

[[b. The ESW temperature rise (CR) was based on heat rate equation of H as Heat Rate (H) = m x specific heat x CR, where, m = mass flow rate.]]

[[c. Accumulative evaporation (gallons/cooling tower) is calculated by multiplying the evaporation rate (gpm) and its corresponding time interval.]]

[d. The total water loss due to evaporation [[and drift]] for the 30 days period is calculated and is defined as the plant unit minimum required water capacity for the [[basin]] design in accordance with RG 1.27.]

~~For this conceptual design u~~Using worst case heat loads during two train operation, the maximum required 30-day cooling water capacity is approximately [[8.40 million gallons]]. ~~[~~The minimum water level to be maintained is determined by accounting for expected debris accumulation, level instrument uncertainties and system leakage.~~]~~

9.2.5.3 Safety Evaluation

The UHS is capable of rejecting the heat load under limiting conditions. The COL Applicant will provide results of UHS capability and safety evaluation of the UHS based on specific site conditions and meteorological data.

The UHS is arranged to support separation of the four divisions of ESWS. System functional capability is maintained assuming one division is unavailable due to on-line maintenance during a design basis accident with a single active failure, with or without a LOOP.

The UHS is designed to withstand the effects of natural phenomena, including the capability to remain functional following a safe shutdown earthquake (SSE). ~~[~~The basis for the structural adequacy of the UHSRS is provided in the following sections:

- 3.3, Wind and Tornado Loads
- 3.4, Water Level (Flood) Design
- 3.5, Missile Protection
- 3.7, Seismic Design
- 3.8, Design of Category I Structures~~]~~

Site-specific UHS design features to address limiting hydrology-related events are addressed as required by DCD Section 2.4, Hydrologic Engineering (specifically Subsections 2.4.8, 2.4.11 and 2.4.14). The UHS is sufficiently sized to accept the heat rejected (Table 9.2.5-1) from the ESWS.

The heat loads for LOCA and safe shutdown conditions with LOOP for up to 36 days are provided in Table 9.2.5-2. These heat loads establish the basis for minimum allowable UHS cooling water inventory and maximum temperature limits, to maintain the ESW supply water temperature less than or equal to 95 ºF under design basis heat load conditions. ~~[~~At the minimum water level following UHS operation in the limiting scenario in Table 9.2.5-2, ESW pump NPSH requirements are met without assuming UHS inventory make-up from external sources, in accordance with RG 1.27.~~]~~ Technical Specifications by the COL applicant (COL 16.1_3.7.9 (1)) prescribe operating limits for ~~[~~minimum UHS usable water capacity and maximum UHS initial water temperature.

~~[~~Table 9.2.5-4 on Failure Modes and Effects Analysis (FMEA) of the UHS concludes that no single failure, coincident with one train being unavailable due to maintenance and a loss of offsite power compromises the safety functions.~~]~~

9.2.5.4 Inspection and Testing Requirements

The COL Applicant will provide test and inspection details based on type of UHS to be provided. These details will include inspection and testing requirements necessary to demonstrate that fouling and degradation mechanisms are adequately managed to maintain acceptable UHS performance and integrity.

The UHS supports ESWS operation and is therefore tested as part of the ESWS preoperational test described in Subsection 14.2.12.1.34. As indicated in Subsection 14.2.12, the COL applicant is responsible for testing outside the scope of the certified design.

Periodic inspections and tests of UHS and ESWS components and subsystems are performed to verify proper operation and system operability. This includes ASME Section XI requirements as discussed in Section 6.6.

The COL Applicant is to develop maintenance and test procedures to monitor debris build up and flush out debris.

The COL Applicant is to develop (if required by the type of UHS selected) inspection and testing requirements necessary to demonstrate that fouling and degradation mechanisms are adequately managed to maintain acceptable UHS performance and integrity.

9.2.5.5 Instrumentation Requirements

The COL Applicant will provide the required alarms, instrumentation and controls details based on the type of UHS to be provided.

Alarms and displays are provided in the main control room (MCR) and remote shutdown console (RSC) for the following parameters:

- UHS Water Level – MCR/RSC display, high level alarm and low level alarm.
- UHS Water Temperature (ESW supply) – MCR/RSC display, high temperature alarm and low temperature alarm.
- [[UHS transfer pump discharge pressure – local and MCR/RSC display]]
- [[UHS transfer pump discharge flow rate – local and MCR/RSC display]]

9.2.6 Condensate Storage Facilities (Demineralized Water, Condensate Storage, and Primary Makeup Water)

The condensate storage facilities (CSF) system consists primarily of three systems:

- Demineralized water system
- Condensate storage and transfer system

COL 9.2(20) The COL Applicant is to provide a detailed description and drawings of the UHS, including water inventory, temperature limits, heat rejection capabilities, instrumentation, and alarms.

COL 9.2(21) The COL Applicant is to determine [[the source of makeup water to the UHS inventory and the blowdown discharge location]] based on specific site conditions.

COL 9.2(22) The COL Applicant is to provide results of UHS capability and safety evaluation of the UHS based on specific site conditions and meteorological data. The COL Applicant is to use ~~at least 30 years~~ site specific meteorological data and heat loads data for UHS performance analysis per Regulatory Guide 1.27.

COL 9.2(23) The COL Applicant is to provide test and inspection requirements of the UHS. These ~~is to~~ include inspection and testing requirements necessary to demonstrate that fouling and degradation mechanisms are adequately managed to maintain acceptable UHS performance and integrity.

COL 9.2(24) The COL Applicant is to provide the required alarms, instrumentation and controls details based on the type of UHS to be provided.

COL9.2(25) The COL applicant is to ~~will~~ develop ~~operating and maintenance procedures for the~~system filing, venting, keeping the system full, and operational procedures to minimize the potential for water hammer; to analyze the system for water hammer impacts; to design the piping system to withstand potential water hammer forces; and to analyze inadvertent water hammer events ~~ESWS to address water hammer issues~~ in accordance with NUREG-0927.

COL 9.2(26) The COL applicant is to specify appropriate sizes of piping and pipe fittings such as restriction orifices to prevent potential plugging due to debris buildup,and develop maintenance and test procedures to monitor debris build up and flush out debris.

COL 9.2(27) The COL Applicant is to develop a milestone schedule for implementation of the operating and maintenance procedures for water hammer prevention.

COL 9.2(28) The COL Applicant is to provide the piping, valves, materials specifications, and other design details related to the site specific UHS.

COL 9.2(28) The COL Applicant is to provide the piping, valves, materials specifications, and other design related to the site specific UHS.

COL 9.2(29) The COL applicant is to provide the safety evaluation of the capability of the ESWS to: (1) isolate its site-specific, nonsafety-related portions; and (2) provide measures to prevent long-term corrosion and organic fouling that may degrade its performance, per Generic Letter (GL) 89-13.

Table 9.2.1-2 Essential Service Water System Failure Modes and Effects Analysis (Sheet 5 of 5)

Item	Description of Component	Safety Function	Plant Operating Mode	Failure Mode(s)	Method of failure Detection	Failure Effect on System Safety Function Capability	General Remarks
[[5	ESWS Blowdown Control Valve (EWS-HCV-010, 011, 012, 013), fail close air operated valve	Closes to isolate blowdown	All	Fails to close upon command	Position indication in MCR	None. Blowdown can be isolated by closing the manual valves (VLV-541A,B,C,D, VLV-543A,B,C,D) Effect of uncontrolled blowdown for 30 minutes on basin inventory is insignificant.]]	

~~[~~Table 9.2.5-3 Ultimate Heat Sink System Design Data~~]~~

[[UHS Cooling Tower and Basin]] ~~(Typical)~~	
Physical Data	
Type and Quantity	[[Wet, mechanical draft Four (4) – 50 percent cooling tower with basin Two (2) cells per cooling tower]]
[[Basin]] Size	[[Footprint Approx 123 feet x 123 feet (inside dimensions) Depth Approx 31 feet (at normal water level)]]
Usable [[Basin]] Water Volume / Required Volume	[[3.12 x 10^6 gallons per basin (at minimum maintained water level) / 2.8 x 10^6 gallons per basin]]
[[Fan and Motor Quantity]]	[[One (1) each per cell]]
[[Fan driver]]	[[200 rated hp]]
[[Design Air Flow]]	[[685,900 cfm per fan]]
[[Cooling Tower Design Life]]	[[60 years]]
Process Parameters	
[[Design Cooling Water Flow Rate]]	[[12,000 (gpm per cooling tower)]]
Design Heat Load	1.96 x10^8 (Btu/hr per [[cooling tower]])
Cooling Water Temperature	[[Hot (Inlet) 128° F]] Cold [[(Outlet)]] 95° F
[[Design Wet Bulb Temperature]]	[[80° F]]
[[Design Approach]]	[[15° F]]

[Table 9.2.5-4 Failure Modes and Effects Analysis for the Ultimate Heat Sink (Sheet 1 of 2)]

Item	Description of Component	Safety Function	Plant Operating Mode	Failure Mode(s)	Method of failure Detection	Failure Effect on System Safety Function Capability	General Remarks
[[1]]	[[UHS Cooling Tower Fan (UHS-MFN-001A, B, C, D and UHS-MFN-002A, B, C, D)]]	[[Circulates ambient air through cooling tower to cool ESW]]	[[All]]	[[Fails to start upon command]] [[Trips for any reason]]	[[Fan status indication light in MCR]] [[Fan status indication light in MCR]]	[[None. Remaining three 50 percent capacity cooling towers are available. A minimum of two towers are required for safe shutdown.]] [[None. Same as the failure mode "Fails to start upon command".]]	[[One Train out due to maintenance does not affect safety function, because only a minimum of two cooling towers are required.]]
[[2]]	[[UHS Transfer Pump (UHS-OPPMPP-001A , B, C, D)]]	[[Transfers 33-1/3 percent of required 30-day cooling water from one inoperable basin to two (2) operating basins]]	[[Accident, Safe shutdown, Cooldown – loss of offsite power]]	[[Fails to start upon command]]	[[Pump status indication light in MCR]]	[[None. Even if single failure is assumed for the transfer pump, the cooling tower with the inoperable transfer pump can use its own basin water. It is not necessary to transfer this basin water to other basins.]]	

[Table 9.2.5-4 Failure Modes and Effects Analysis for the Ultimate Heat Sink (Sheet 2 of 2)]

Item	Description of Component	Safety Function	Plant Operating Mode	Failure Mode(s)	Method of failure Detection	Failure Effect on System Safety Function Capability	General Remarks
[[3]]	[[UHS Transfer Pump Discharge Valve (MOV-503A, B, C, D), fail as is, motor operated valve]]	[[Opens to provide flow path]]	[[Accident, Safe shutdown, Cooldown – loss of offsite power]]	[[Fails to open upon command]]	[[Position indication in MCR]]	[[None. Even if single failure is assumed for the valve, the cooling tower with the inoperable valve can use its own basin water. It is not necessary to transfer this basin water to other basins.]]	
[[4]]	[[UHS Transfer Line Basin Inlet valve (MOV-506A, B, C, D), fail as is, motor operated valve]]	[[Opens to provide flow path]]	[[Accident, Safe shutdown, Cooldown – loss of offsite power]]	[[Fails to open upon command]]	[[Position indication in MCR]]	[[None. This failure effect is bounded by the failure effect of the UHS Cooling Tower Fan.]]	
[[5]]	[[UHS Basin Blowdown Control Valve (EWS-HCV-010, 011, 012, 013) fail close air operated valve]]	[[Closes to isolate blowdown]]	[[All]]	[[Fails to close upon command]]	[[Position indication in MCR]]	[[None. Blowdown can be isolated by closing the manual valves (VLV-541A,B,C,D, VLV-543A,B,C,D) [[Effect of uncontrolled blowdown for 30 minutes on basin inventory is insignificant.]]	

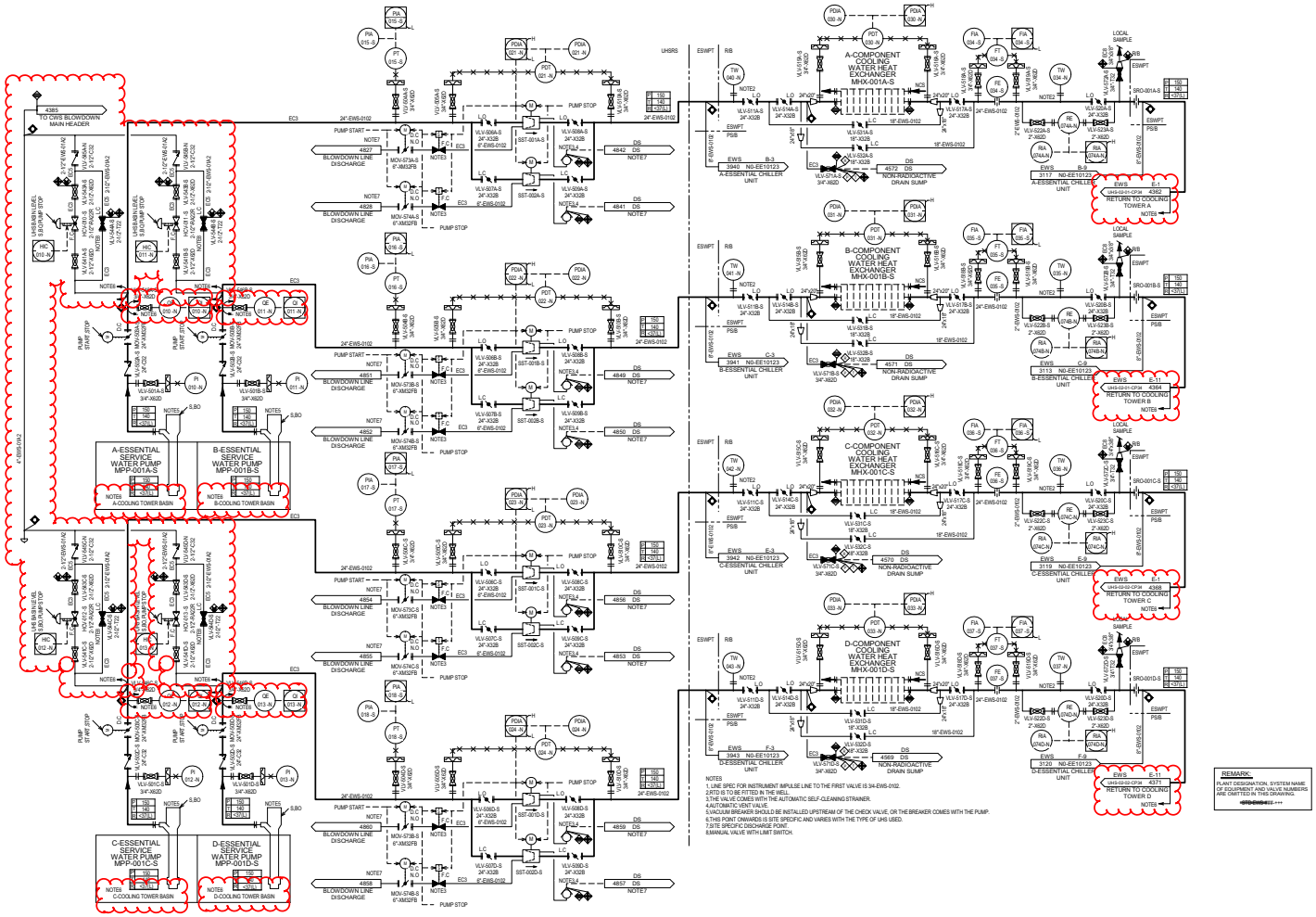

Figure 9.2.1-1 Essential Service Water System Piping and Instrumentation Diagram (Sheet 1 of ~~3~~2)

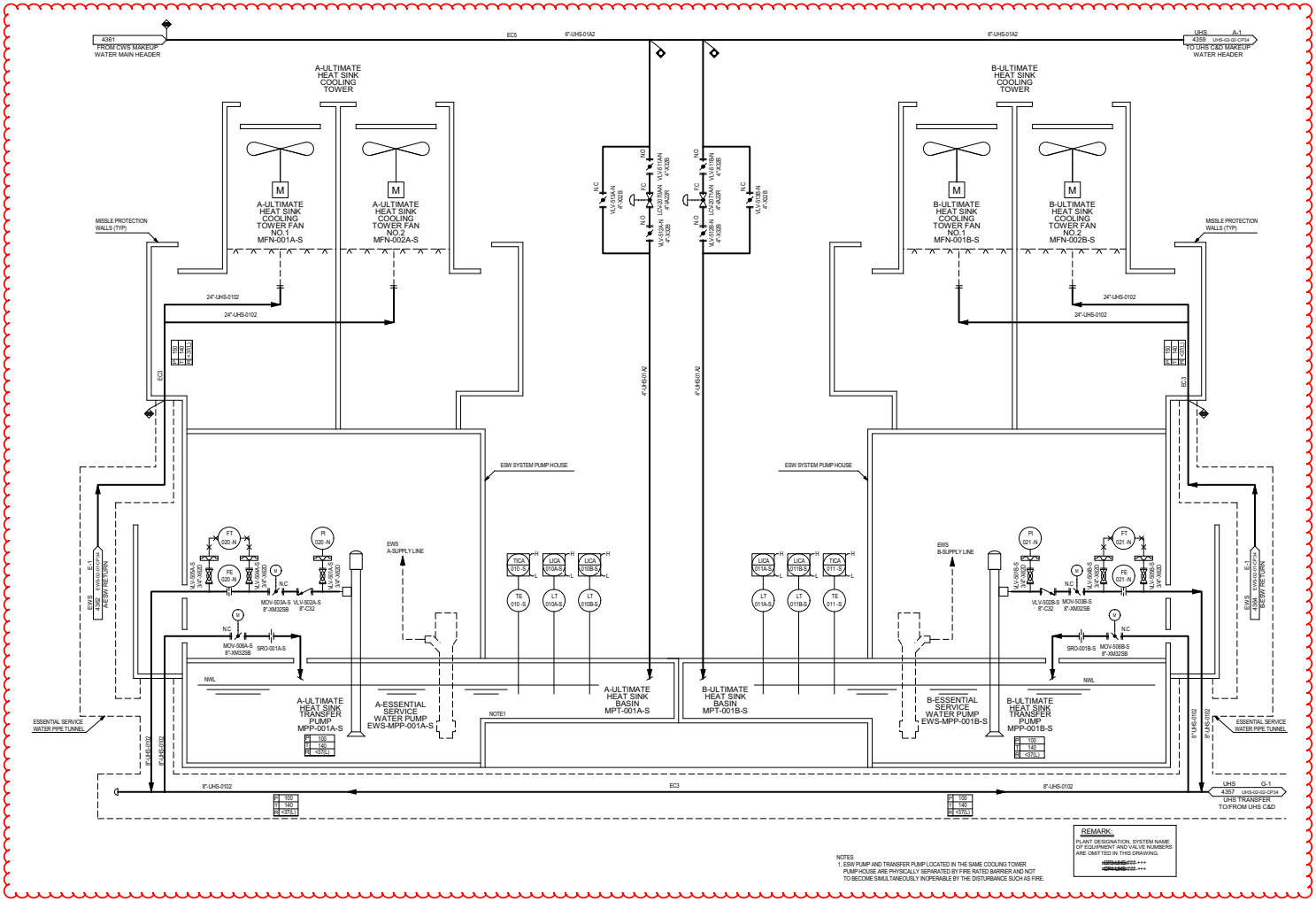

[[Figure 9.2.5-1 Ultimate Heat Sink Flow Diagram (Sheet 1 of 2)]]

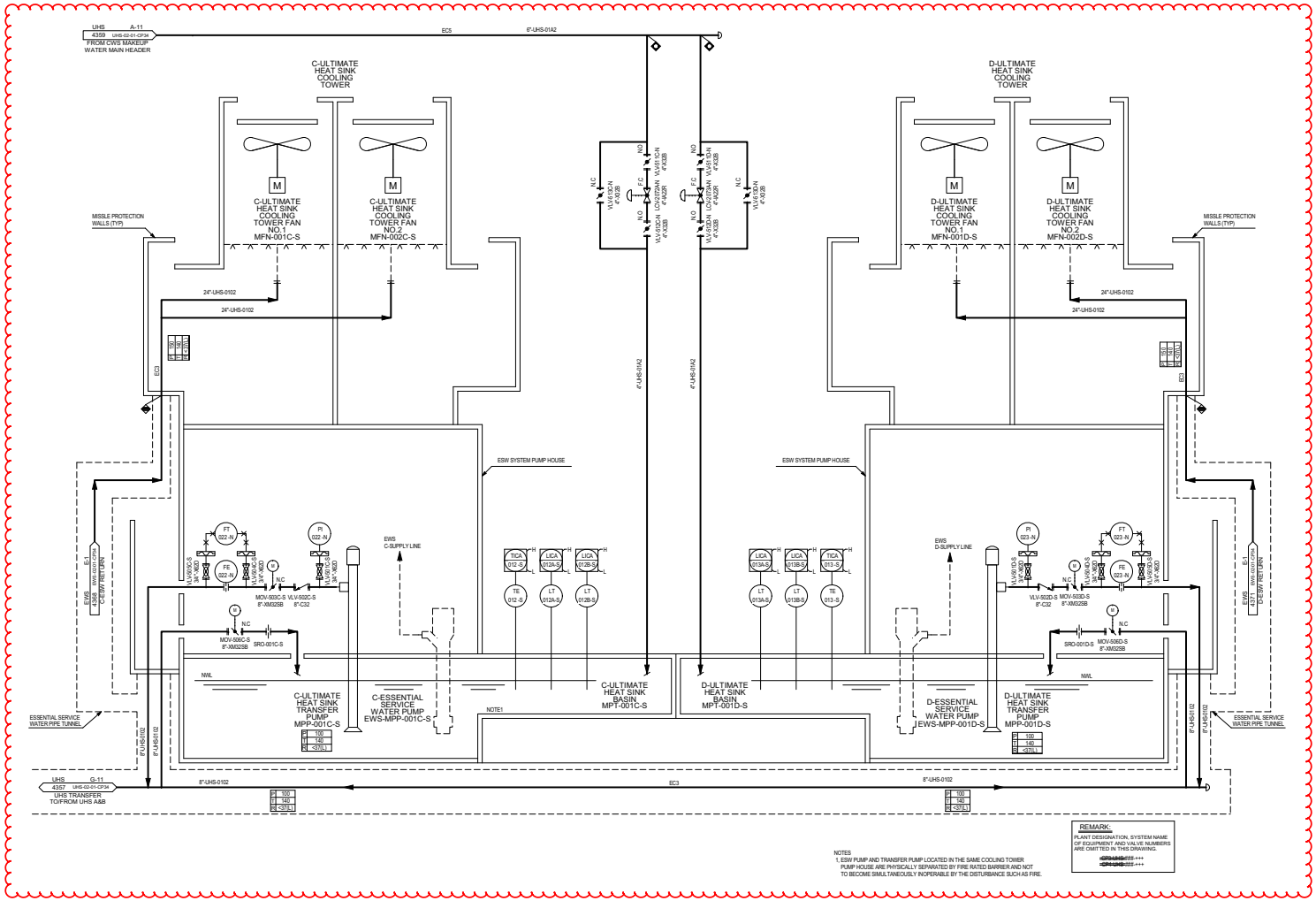

[[Figure 9.2.5-1 Ultimate Heat Sink Flow Diagram (Sheet 2 of 2)]]

Table 12.3-8 Regulatory Guide 4.21 Design Objectives and Applicable DCD Subsection Information for Minimizing Contamination and Generation of Radioactive Waste (Sheet 10 of 61)

Objective		System Features	DCD Reference
3	Use leak detection methods (e.g., instrumentation, automated samplers) capable of early detection of leaks in areas where it is difficult or impossible to conduct regular inspections (such as for spent fuel pools, tanks that are in contact with the ground, and buried, embedded, or subterranean piping) to avoid release of contamination of the environment.	The leak detection instrumentation is described above, and is included on all four trains of the ESWS.	9.2.1.2.1
4	Reduce the need to decontaminate equipment and structures by decreasing the probability of any release, reducing any amounts released, and decreasing the spread of the contaminant from the source.	The ESWS draws water from the ~~intake~~ [[basin]] and returns water to the UHS after passing through the CCW HXs and the essential chiller units. The UHS is the source of water to the ~~intake~~ [[basin]]. The essential chiller units do not include the radioactive fluid, and CCWS is the intermediate loop between the reactor auxiliaries and the ESWS. This arrangement minimizes direct leakage of the radioactive fluid from the ESWS to the environment. In addition, radiation monitors are provided in each discharge line of CCW HX essential service water (ESW) side. The monitors alert the operator if the leaking CCW contains radioactivity so that the operator can isolate the leaking train.	9.2.1.2

B 3.7 PLANT SYSTEMS

B 3.7.9 Ultimate Heat Sink (UHS)

~~[Not applicable to US-APWR Design Certification. Site specific information, including the maximum operating temperature and the lowest water level for ESW pumps, to be provided by COL Applicant.]~~

BASES

BACKGROUND

The UHS provides a heat sink for processing and operating heat from safety related components during a transient or accident, as well as during normal operation. This is done by utilizing the Essential Service Water System (ESWS) and the Component Cooling Water (CCWS) system.

[[The UHS consists of four 50 percent capacity mechanical draft cooling towers, one for each ESWS train. Each cooling tower consists of two cells with one fan per cell. The combined inventory of three of the four UHS basins provides a 30-day storage capacity as discussed in FSAR Chapter 9 (Ref. 1). Each unit is provided with its own independent UHS with no cross connection between the two units.]] The two principal functions of the UHS are the dissipation of residual heat after reactor shutdown, and dissipation of residual heat after an accident.

The basic performance requirements are that an adequate inventory of cooling water be available for [[30]] days without makeup, and that the design basis temperatures of safety-related equipment not be exceeded. [[Each UHS basin provides 33-1/3 percent of the combined inventory for the 30-day storage capacity to satisfy the short-term recommendation of Regulatory Guide 1.27 (Ref. 2). There is one safety-related UHS transfer pump per UHS basin which is used to transfer water between the UHS basins.]]

The [[stored]] water level provides adequate net positive suction head (NPSH) to the ESW pump during a 30-day period of operation following the design basis LOCA or safe shutdown with LOOP scenario without makeup.

Additional information on the design and operation of the system, along with a list of components served, can be found in Reference 1.

APPLICABLE SAFETY ANALYSES

The UHS is the sink for heat removed from the reactor core following all accidents and anticipated operational occurrences in which the unit is cooled down and placed on residual heat removal (RHR) operation.

[[The operating limits are based on safe shutdown with LOOP. A conservative heat transfer analysis for the worst case LOCA was performed to ensure that the cooling tower capacity and the basin water

BASES

APPLICABLE SAFETY ANALYSES (continued)

inventory adequately remove the heat load for the worst case LOCA. Reference 1 provides the details of the assumptions used in the analysis which include worst expected meteorological conditions, conservative uncertainties when calculating decay heat, and worst case single active failure. The UHS is designed in accordance with Regulatory Guide 1.27 (Ref. 2) which requires a 30 day supply of cooling water in the UHS.]]

The UHS satisfies Criterion 3 of 10 CFR 50.36(d)(2)(ii).

LCO

[[The UHS is required to be OPERABLE and is considered OPERABLE if it contains a sufficient volume of water at or below the maximum temperature that would allow the ESWS to operate for at least 30 days following a design basis LOCA or safe shutdown with LOOP, without makeup water, and provide adequate net positive suction head (NPSH) to the ESWS pumps, and without exceeding the maximum design temperature of the equipment served by the ESWS. To meet this condition, three UHS cooling towers with the UHS temperature not exceeding 93°F during MODES 1, 2, 3 and 4 and the level in each of three basins being maintained above 2,800,000 gallons are required—a volume correspondent to the safe shutdown with LOOP conditions that bounds the LOCA condition. Additionally, three of the UHS transfer pumps shall be OPERABLE, with each pump capable of transferring flow from a UHS basin meeting water inventory and temperature limits, and powered from an independent Class 1E electrical division.]]

APPLICABILITY

In MODES 1, 2, 3, and 4, the UHS is required to support the OPERABILITY of the equipment serviced by the UHS and required to be OPERABLE in these MODES.

In MODE 5 or 6, the OPERABILITY requirements of the UHS are determined by the systems it supports.

ACTIONS

[[A.1 and A.2

If one of the required cooling towers and associated fans is inoperable (i.e., one or more fans per cooling tower inoperable), action must be taken to restore the inoperable cooling tower and associated fan(s) to OPERABLE status within 72 hours. In this Condition, the remaining OPERABLE cooling towers with associated fans are adequate to perform the heat removal function. However, the overall reliability is reduced because a single failure in the OPERABLE UHS cooling towers could result in a loss of UHS function.
Required Action A.2 allows the option to apply the requirements of Specification 5.5.18 to determine a Risk Informed Completion Time (RICT). This Required Action is not applicable in MODE 4. The 72-hour

BASES

ACTIONS (continued)

Completion Time is based on the capability of the OPERABLE cooling towers to provide the UHS cooling capability and the low probability of an accident occurring during the 72 hours that one required cooling tower and associated fans are inoperable.]]

B.1

With water temperature of the UHS [[> 93°F]], the design basis assumption associated with initial UHS temperature is bounded provided the temperature of the UHS averaged over the previous 24-hour period is [[≤ 93°F]]. With the water temperature of the UHS [[> 93°F]], long-term cooling capability of the ECCS loads may be affected. Therefore, to ensure long-term cooling capability is provided to the ECCS loads when water temperature of the UHS is [[> 93°F]], Required Action B.1 is provided to monitor the water temperature of the UHS more frequently and verify the temperature is [[≤ 93°F]] when averaged over the previous 24 hour period. The once per hour Completion Time takes into consideration UHS temperature variations and the increased monitoring frequency needed to ensure design basis assumptions and equipment limitations are not exceeded in this condition. If the water temperature of the UHS exceeds [[93°F]] when averaged over the previous 24 hour period, Condition E must be entered immediately.

[[C.1

If one or more required UHS basins have a water level not within the limits, action must be taken to restore the water level to within limits within 72 hours.

The 72 hour Completion Time is reasonable based on the low probability of an accident occurring during the 72 hours, the considerable cooling capacity still available in the basin(s), and the time required to reasonably complete the Required Action. Furthermore, there would be no significant loss in the UHS cooling capacity when the water level drops below the normal level during a 72-hour period because of sufficient cooling tower basin inventory. The UHS has a combined design heat removal capacity of approximately 20 days from two operable cooling tower basins and 30 days from three operable cooling tower basins.]]

BASES

ACTIONS (continued)

[[D.1, D.2.1, and D.2.2

If one or more required UHS transfer pump(s) are inoperable, action must be taken to restore the pump(s) to OPERABLE status or implement an alternate method of transferring the affected basin within 7 days. If an alternate method is utilized, action still must be taken to restore the transfer pump(s) to OPERABLE status within 31 days.

The Completion Times are reasonable based on the low probability of an accident occurring during the time allowed to restore the pump(s) or implement an alternate method, the availability of alternate methods, and the amount of time available to transfer the water from one basin to the other under the worst case accident assumptions. Furthermore, the inoperability of all required transfer pumps leaves only two cooling tower basins with a combined design heat removal capacity of approximately 20 days. This cooling period bounds and justifies the 7-day completion time to restore the transfer pumps to operable status.]]

E.1 and E.2

If the Required Actions and Completion Times of Condition [[A, B, C, or D]] are not met, or the UHS is inoperable for reasons other than Condition [[A, B, C, or D]] the unit must be placed in a MODE in which the LCO does not apply. To achieve this status, the unit must be placed in at least MODE 3 within 6 hours and in MODE 5 within 36 hours.

The allowed Completion Times are reasonable, based on operating experience, to reach the required unit conditions from full power conditions in an orderly manner and without challenging unit systems.

SURVEILLANCE REQUIREMENTS

SR 3.7.9.1

This SR verifies that adequate long term (30 day) cooling can be maintained. The specified level also ensures that sufficient NPSH is available to operate the ESWS pumps. The Surveillance Frequency is based on operating experience, equipment reliability, and plant risk and is controlled under the Surveillance Frequency Control Program. This SR verifies that each required UHS [[basin]] water level is [[≥ 2,800,000 gallons]]. Plant procedures provide the corresponding water level to be verified to assure a usable volume of [[2,800,000 gallons]], accounting for unusable volume and measurement uncertainty.

BASES

SURVEILLANCE REQUIREMENTS (continued)

SR 3.7.9.2

This SR verifies that the ESWS is available to cool the CCW System and essential chiller unit to at least its maximum design temperature with the maximum accident or normal design heat loads for 30 days following a design basis LOCA or safe shutdown with LOOP. The Surveillance Frequency is based on operating experience, equipment reliability, and plant risk and is controlled under the Surveillance Frequency Control Program. This SR verifies that the water temperature of the UHS is [[≤ 93°F]].

[[SR 3.7.9.3

Operating each cooling tower fan for ≥15 minutes ensures that all fans are OPERABLE and that all associated controls are functioning properly. It also ensures that fan or motor failure, or excessive vibration, can be detected for corrective action. The Surveillance Frequency is based on operating experience, equipment reliability, and plant risk and is controlled under the Surveillance Frequency Control Program.]]

[[SR 3.7.9.4

This SR verifies that each UHS fan starts and operates on an actual or simulated actuation signal. The Surveillance Frequency is based on operating experience, equipment reliability, and plant risk and is controlled under the Surveillance Frequency Control Program.]]

[[SR 3.7.9.5

This SR verifies that each UHS transfer pump starts and operates on a manual actuation signal. Verification of the UHS transfer pump operation includes testing to verify the pump's developed head at the flow test point is greater than or equal to the required developed head. Testing also includes verification of required valve position.

The Surveillance Frequency is based on operating experience, equipment reliability, and plant risk and is controlled under the Surveillance Frequency Control Program.]]

BASES

SURVEILLANCE REQUIREMENTS (continued)

SR 3.7.9.6

This SR verifies the correct alignment for manual, power-operated, and automatic valves in the UHS flow path to assure that the proper flow paths exist for UHS operation. This SR does not apply to valves that are locked, sealed or otherwise secured in position, since they are verified to be in the correct position prior to being locked, sealed, or secured. This SR does not require any testing or valve manipulation; rather, it involves verification that those valves capable of being mispositioned are in the correct position. This SR does not apply to valves that cannot be inadvertently misaligned, such as check valves.

The Surveillance Frequency is based on operating experience, equipment reliability, and plant risk, and is controlled under the Surveillance Frequency Control Program.

SR 3.7.9.7

This SR verifies proper manual and automatic operation of the UHS valves on remote manual or on an actual or simulated actuation signal. The UHS is a normally operating system that cannot be fully actuated as part of normal testing. This Surveillance is not required for valves that are locked, sealed, or otherwise secured in the required position under administrative controls.

The Surveillance Frequency is based on operating experience, equipment reliability, and plant risk, and is controlled under the Surveillance Frequency Control Program.

REFERENCES

1. FSAR Subsection 9.2.5.

2. Regulatory Guide 1.27.

1-4 PSWS

Page	Location (e.g., subsection with paragraph/ sentence/ item, table with row/column, or figure)	Description of Change
3.2-56	Table 3.2-2	Change: Delete “PS/B” from row of portable sanitary water. Reason: No sanitary water system are needed in PS/B.
9.2-29 - 34	Section 9.2.4	Change: Add CDI brackets on all of section 9.2.4 “Portable Sanitary Water System” except for sentences that mention actions of COL Applicant, sentences of 9.2.4.2.3 of “Potable water is supplied to areas that have the potential for contamination with radioactivity. Where this potential for contamination exists, the potable water system is protected by installing backflow prevention device.” and all sentences of 9.2.4.3. “Safety Evaluation”. Reason: Portable Sanitary Water System is site specific.
9.2-85	Table 9.2.4-1	Change: Add CDI brackets on all of Table 9.2.4-1 Reason: Portable Sanitary Water System is site specific.
9.2-110	Figure 9.2.4-1	Change: Add indication for CDI with cloud shape on all of this P&ID and note. Reason: Portable Sanitary Water System is site specific.

Table 3.2-2 Classification of Mechanical and Fluid Systems, Components, and Equipment (Sheet 40 of 58)

System and Components	Equipment Class	Location	Quality Group	10 CFR 50 Appendix B (Reference 3.2-8)	Codes and Standards(3)	Seismic Category(4)	Notes
Drain piping, valves in radiological controlled area	6	R/B A/B AC/B	N/A	N/A	6	Note 1	
Drain piping, valves, reactor building non-radioactive sump and sump pump in reactor building except for RCA	8	R/B	D	N/A	4	NS	
Drain piping, valves, turbine building sump and sump pump in turbine building	8	T/B	D	N/A	4	NS	
Drain piping, valves in auxiliary building and access control building, except for RCA	10	A/B,AC/B	N/A	N/A	5	NS	
Drain piping, valves in power source building	10	PS/B	N/A	N/A	5	NS	
Drain piping valves related to ESF rooms drain isolation FDS-VLV-001A,B,C,D	3	R/B	C	YES	3	I	
26. Potable and Sanitary Water System							
Potable and Sanitary Water System components, piping and valves	10	R/B,A/B,AC/B ~~PS/B~~, T/B	N/A	N/A	5	NS	
27. Emergency Gas Turbine Auxiliary System							
Fuel oil storage tanks	3	PSFSV	C	YES	3	I	
Fuel oil transfer pumps	3	PSFSV	C	YES	3	I	
Fuel oil day tanks	3	PS/B	C	YES	3	I	
Air receivers	3	PS/B	C	YES	3	I	
Lube oil main oil pumps	3	PS/B	C	YES	5	I	
Lube oil cooler	3	PS/B	C	YES	5	I	
Lube oil reduction gear reservoir	3	PS/B	C	YES	5	I	
Ventilation and cooling equipment	3	PS/B	C	YES	5	I	

Reactor coolant pump thermal barrier HX and motor cooling water flow rate is indicated in the MCR. If the flow rate drops to its low flow setpoint, a low flow alarm is transmitted to the MCR. A high flow alarm, resulting from the in-leakage of reactor coolant to CCWS due to the reactor coolant pump thermal barrier HX tube leak, is transmitted to the MCR when the flow rate becomes about 1.5 times as large as the normal flow rate, and the isolation valves located at cooling water return line are closed.

9.2.2.5.6 CCW surge tank pressure

The CCW surge tank pressure is locally indicated. The surge tank nitrogen cover gas supply valve and tank vent valve are controlled with open-closed control so that the tank pressures are maintained within a pre-set range. High and low surge tank pressures are alarmed in the MCR.

9.2.2.5.7 CCWP discharge and suction pressure

The CCW pump discharge and suction pressures are locally indicated and are used for CCW pump performance testing.

9.2.2.5.8 CCW supply temperature

The CCW HX outlet temperature is indicated in the MCR. When the temperature exceeds the setpoint, an alarm is transmitted to the MCR.

9.2.2.5.9 Other instrumentation

As shown in Figure 9.2.2-1, the other flow and temperature indicators are provided where required. These indicators are used for initial flow balancing, and flow and temperature verification during plant operation.

9.2.3 [Reserved]

Not applicable to the US-APWR.

9.2.4 Potable and Sanitary Water Systems

[[The objective of the potable and sanitary water system (PSWS) is to provide clean and potable water for domestic use and human consumption and to collect site sanitary waste for treatment, dilution and discharge during normal operation. The system serves all the areas in the T/B, R/B, A/B, access building, firehouse and future facilities.]]

9.2.4.1 Design Bases

[[There are no safety design bases for the potable and sanitary water system. The power generation design bases are as follows:]]

- [[The potable and sanitary water system ~~layout~~ is designed with no interconnection ~~and/or sharing between~~ to systems that could potentially introduce contaminants including radiological contaminates into the system.~~or~~

~~between the units to prevent contamination due to potential radioactivity or due to backflow making water unfit for human consumption.~~ This conforms to the requirement of GDC 60 (Ref. 9.2.11-1).]]

- [[The potable water is designed to be treated if necessary to prevent harmful physiological effects. Its bacteriological and chemical quality conforms to the requirements of the Environmental Protection Agency "National Primary Drinking Water Standards," 40 CFR 141 (Ref. 9.2.11-4). All state and local environmental protection standards will also be followed, as these may be more stringent than federal requirements.]] COL Applicant is to confirm that all State and Local Department of Health and Environmental Protection Standards are applied and followed. The COL Applicant is to confirm the source of potable water to the site and the necessary required treatment.

- [[The distribution of the potable water by the PSWS is in compliance to the "Occupational Safety and Health Standard." 29 CFR 1910, 141 (Ref. 9.2.11-5).]]

- [[The supply capacity of potable water is to provide a quantity of potable water based on 20 gal/person/day for the largest number of persons expected to be at the station during a 24-hour period of power generation or outages. The potable water system is designed to provide a storage capacity of 25,000 gallons.]] The COL applicant is to confirm the source of potable water to the site and the necessary require treatment. The COL Applicant is to determine the total number of people at the site and identify the usage capacity. Based on these numbers the COL Applicant is to size the potable water tank and associate pumps if used.

- [[Water heaters provide hot water to the main lavatory, shower areas, and other locations where needed. The heater capacity is based on providing an adequate supply of hot water for the anticipated maximum drawdown in the plant. The heater also provides a storage capacity equal to the probable maximum hourly demand for hot water.]]

- [[The system maintains a minimum pressure of 20 psig at the furthermost points in the distribution system.]]

- [[The sanitary drainage system is designed to accommodate 20 gallons/person/day for up to 3500 people during 24-hour period. The above number of people onsite is conservatively based on the largest number of people during plant construction. However, during normal operation, as well as during plant refueling outages, the number of people will be considerably less and the sanitary drainage capacity requirements is reduced. This may result in storage tank modifications based on reduced usage.]]

- [[Sanitary drainage from all remote buildings onsite will be directed to individual sump-lift station, supplied with sewerage grinder transport pump for discharge to a treatment facility.]] COL Applicant is to confirm that the sanitary waste is sent to the onsite plant treatment area or they will use the city sewage system. The COL

Applicant is to determine the total number of sanitary lift stations and is to size the appropriate interfaces.

9.2.4.2 System Description

~~For COL applicants using on-site wells for potable water supply, the potable water system described below applies. For any other source of potable water the COL applicant is responsible for the design and supply of the potable water to the site. The sanitary drainage system design applies for any source of potable water supply.~~

9.2.4.2.1 General Description

[[The potable and sanitary water system flow diagram is shown in Figure 9.2.4-1. Major component data are provided in Table 9.2.4-1.]] The COL Applicant is to confirm Table 9.2.4-1 for required components and their values based on system and component descriptions.

[[The source of water for the potable water system is from two existing onsite wells. The onsite wells are capable of supplying water to the potable water storage tank. The potable water system consists of a potable water storage tank, two potable water pumps, a jockey pump, a distribution loop around the power block, hot water heaters, and necessary interconnecting piping and valves. Disinfection is provided by a chlorination system installed upstream of the potable water storage tank. The pumps receive electrical power from site AC power sources. The disinfection chlorination is provided via a sodium hypochlorite (NaOCl) injection system, as chlorine is no longer utilized on US nuclear sites due to control room habitability issues with toxic gases. Depending on the site well water chemical analysis, filtration or other water treatment alternatives may be required.]]

[[The sanitary drainage system collects sanitary waste from various plant areas such as restrooms, locker rooms etc., and carries the wastewater for processing to the treatment facility. The sanitary drainage system does not serve any facilities in the radiologically controlled areas.]]

9.2.4.2.2 Component Description

[[9.2.4.2.2.1 Potable Water Storage Tank]]

[[The potable water storage tank consists of a 25,000-gal, internally coated, carbon steel tank which stores water for distribution throughout the plant. A certified organic coating or non-leachable coating will be utilized to line the carbon steel tank. High water level and low water level signals from this tank control the operation of the well water pumps. Upon receipt of low potable water tank level, the well water pumps start, and the inlet valve to the potable water tank opens.]]

[[A low-low tank level signal stops/trips the potable water feed pumps to prevent damage to the pumps. High and low-level alarms are provided. Manual override of the automatic level controls is available.]]

[[9.2.4.2.2.2 Potable Water Pumps]]

[[Each of the two potable water pumps is a full-capacity, motor-driven pump taking suction from the potable water storage tank and discharging to the domestic water distribution header. The pumps are operated as required to meet potable water demand in the plant.]]

[[9.2.4.2.2.3 Jockey Pump]]

[[A continuously operated motor driven jockey pump, taking suction from the potable water storage tank, is used to supply potable water to the distribution header and to maintain the pressure of the system during low-flow requirement periods. A recirculation line to the potable water system storage tank is provided to keep uniform mixture of hypochlorite within the tank, thus preventing stagnation and providing pump protection.]]

[[9.2.4.2.2.4 Hot Water Heaters]]

[[Local potable water hot water heaters are used to ~~produce~~ provide hot water to building -specific areas based on their requirements. Potable ~~Water~~ water ~~from the source~~ is supplied directly ~~potable water tank is supplied~~ to the hot water heater, and which is then routed to the shower and toilet areas and to other plumbing fixtures and equipment requiring domestic hot water service. Local electric water heaters are provided as required to serve restricted or possible contaminated areas such as the MCR. Points of use, inline electric water heating elements are used to generate hot water for the MCR and the T/B areas.]]

[[9.2.4.2.2.5 Valves]]

[[Relief valves are provided on all equipment and in all piping requiring pressure relief.]]

9.2.4.2.3 System Operation

[[Water from the deep wells onsite is pumped and stored in the potable water storage tank. Low water level instrumentation in the potable water storage tank generates a signal to start the well water pumps and supply makeup to the potable water system storage tank. High water levels in the potable water system storage tank produce a signal that stops the well water pumps.]]

[[Prior to supply well water entering the potable water system storage tank, supply water is disinfected. A minimum residual chlorine level of 0.5 ppm is maintained in the supply water prior to entering the potable water system storage tank. The chlorination system is activated and deactivated by a flow signal generated by the fill valve located upstream of the potable water system storage tank.]]

[[Two potable water pumps and a jockey pump are used to supply potable water throughout the plant. The potable water system pumps are activated sequentially to maintain adequate pressure throughout the distribution system. A pressure transmitter is provided downstream of the potable water system pumps to control their start/stop sequences. The jockey pump operates continuously to maintain system pressure

during low-flow requirement periods.]] COL Applicant is to identify the potable water supply and describe the system operation.

Potable water is supplied to areas that have the potential for contamination with radioactivity. Where this potential for contamination exists, the potable water system is protected by installing backflow prevention device.

[[No interconnections exist between the potable water system and any system using water for purposes other than domestic water service, including any potentially radioactive system. The water supply from the other sources supplying water to potentially radioactive systems is designed to use an air gap to prevent contamination of the potable water system from other systems.]]

9.2.4.3 Safety Evaluation

The potable and sanitary water system has no safety-related function and therefore requires no nuclear safety evaluation. The PSWS has no interconnection to any system or equipment having the potential for containing radioactive material, thus eliminating the possibility of such contamination to the system. The wastes produced by the potable and sanitary water system contain no radioactive materials and can be safely treated in the sewage treatment plant.

9.2.4.4 Inspection and Testing Requirements

- [[The potable water system is tested hydrostatically for leak-tightness and system inspection is performed in accordance with applicable plumbing code requirements.]]

- [[The presence of residual chlorine is confirmed through independent laboratory tests of samples at the potable water storage tank, and at other sampling points (grab samples) if required.]]

- [[Periodic tests for microbiological and bacteria in the potable water, as well as the plant low volume and sanitary wastes, are conducted.]]

9.2.4.5 Instrumentation Requirements

- [[Thermostats, high-temperature limit switches, and temperature gauges as required are installed on the potable water system hot water supply. Pressure regulators are employed in those sections of the distribution system where pressure restrictions are imposed.]]

- [[Flow instrumentation associated with the potable water storage tank fill valve, provides input control signal for the chlorinator.]]

- [[A storage tank water level indicator with alarm signals, control signals for the fill valve and the potable water pumps is provided. The potable water pumps are tripped on low-low water level in the potable water system storage tank.]]

- [[A pressure transmitter located on the discharge of the potable water system pumps controls the stop/start sequence of the pumps.]]
- [[Instrumentation is provided for the continuous operation of the jockey pump to maintain system pressure during low-flow requirement periods.]]
- [[Instrumentation is provided for indication and for automatic potable water system pump start if the jockey pump fails to maintain system pressure.]]
- [[Instrumentation necessary for proper operation of all three pumps to satisfy the system distribution flow rates and to maintain an acceptable system pressure is provided.]]

9.2.5 Ultimate Heat Sink

The ultimate heat sink (UHS) consists of an assured source of water with associated safety-related structures designed to dissipate the heat rejected from the ESWS during normal and accident conditions. UHS peak heat loads and long term heat loads are shown in Tables 9.2.5-1 and 9.2.5-2, respectively. The UHS system is safety-related and designed to meet the requirements of Regulatory Guide 1.27 (Ref. 9.2.11-2).

The following subsections contain conceptual design information enclosed in brackets and are outside the scope of the standard design, thus shall not be incorporated by reference in COLA.

9.2.5.1 Design Bases

~~The UHS is designed to dissipate the maximum possible total heat load, including that of a LOCA under the worst combination of adverse environmental conditions, even freezing, and cool the unit for a minimum of 30 days (or 36 days for cooling pond in accordance with Regulatory Guide 1.27) without makeup water. The UHS is designed for a single nuclear power unit and is not shared between units.~~The UHS is a site-specific interface with the ESWS. The design information provided in this subsection establishes interface requirements applicable to the UHS design and to be provided by the COL applicant based on specific site characteristics including meteorological data.

The UHS designed in accordance with GDC 44~~ bases~~ to~~ meet the safety-related functional requirements are provided below~~:

- Dissipate the maximum total heat load from the ESWS under normal and accident condition, including that of a LOCA or safe shutdown scenario with LOOP under the worst combination of adverse environmental conditions, even freezing, and cool the unit for a minimum of 30 days (or minimum of 36 days for cooling pond) in accordance with Regulatory Guide 1.27 without makeup water. The decay heat is estimated using ANSI/ANS 5.1, “Decay Heat Power for Light Water Reactors” (Ref. 9.2.10-6).

Table 9.2.4-1 Potable and Sanitary Water System Component Data

Potable water storage tank	
Quantity	1
Capacity (gal)	25,000
Potable water pumps	
Quantity	2
Design Flow rate (gal/min)	50
Design head (ft)	220
Jockey pump	
Quantity	1
Design Flow rate (gal/min)	50
Design head (ft)	220
Potable water well pumps	
Quantity	2
Design Flow rate (gal/min)	50
Design head (ft)	220
Chlorine metering pump	
Quantity	1
Design Flow rate (gal/h)	2.9

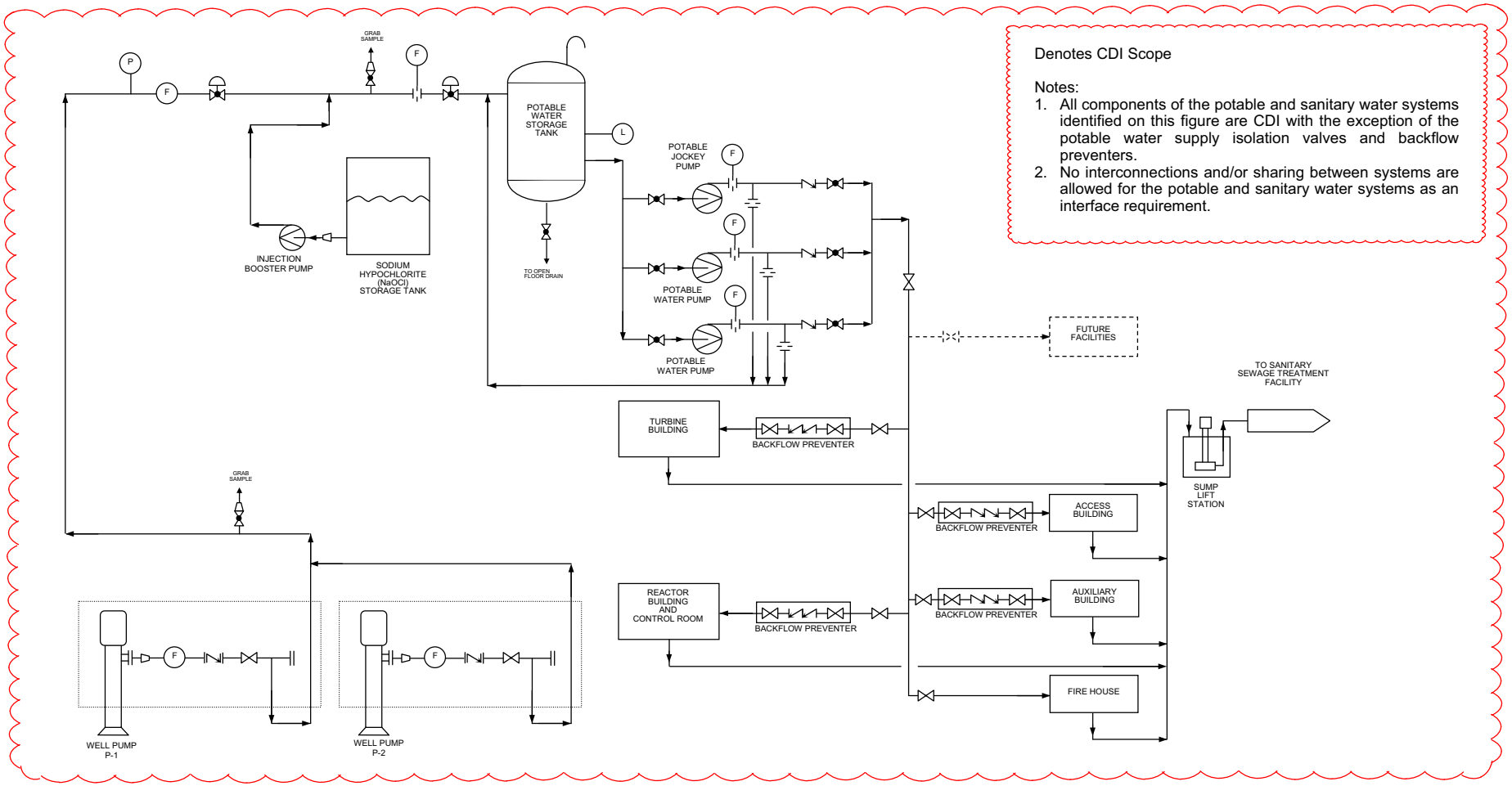

Figure 9.2.4-1 Potable and Sanitary Water System Flow Diagram

1-5 CWS

Page	Location (e.g., subsection with paragraph/ sentence/ item, table with row/column, or figure)	Description of Change
10.1-6	Figure 10.1-1	Change: The figure of Cooling Tower and capacity of Circulating Water Pump are indicated with cloud shape as CDI. And note indicating area of CDI is added. Reason: Choice of cooling system and design of capacity of Circulating Water Pump are site specific.
10.4-19 - 20	Section 10.4.5.2.1	Change: Add CDI brackets on phrases including “CWS (Circulating Water System) CTW (Cooling Tower)”, “CTW”, “CTW basin”, “cooling tower”, “make up water pump” and “blowdown pump”. And also add CDI brackets on “eight, 12.5 percent capacity”. Reason: Choice of cooling system, design of makeup water pump and blowdown pump are site specific. And design of their capacities are site specific.
10.4-20	Section 10.4.5.2.2	Change: Add CDI brackets on phrases including “Cooling Tower”, “CTW basin”, “CTW make up water and blowdown system”, and “Chemical treatment system”. Reason: Selection of cooling system, design of makeup water system, blowdown system and chemical treatment system are site specific.
10.4-20	Section 10.4.5.2.2.1	Change: Add CDI brackets on phrase of “eight, 12.5 percent capacity” and sentence of “vertical pump, wet pit type, single-stage mixed flow pumps driven by direct drive electric motors. Each cooling tower basin contains four circulating water pumps that are arranged in parallel.”. Reason: Design of Circulating Water System is site specific.
10.4-20 - 21	Section 10.4.5.2.2.2	Change: Add CDI brackets on all of this section and its title. Reason: Selection and design of cooling system is site specific.
10.4-21	Section 10.4.5.2.2.4	Change: Add CDI brackets on all of this section and its title. Reason: Selection cooling system and design of Makeup Water Pump is site specific.

Page	Location (e.g., subsection with paragraph/ sentence/ item, table with row/column, or figure)	Description of Change
10.4-21	Section 10.4.5.2.2.5	Change: Add CDI brackets on all of this section and its title. Reason: Selection of cooling system and design of Blowdown Pump is site specific.
10.4-21	Section 10.4.5.2.2.6	Change: Add CDI brackets on sentences of "All above ground CWS piping is carbon steel piping designed, fabricated, installed and tested in accordance with ASME B31.1 Power Piping Code (Reference 10.4-3), with an internal coating of corrosion preventive compound. The underground portions of the circulating water system piping are constructed of pre-stressed concrete pressure piping with lining. The piping is arranged to allow easy access for inspection (i.e., access man ways for the large CWS underground pre-stressed concrete headers)." and "Control valves are provided for the regulation of cooling tower blowdown and makeup.". Reason: Selection of cooling system and design of piping and valves of CTW is site specific.
10.4-21 - 22	Section 10.4.5.2.2.8	Change: Add CDI brackets on all of this section and its title. Reason: Selection of system and design of Chemical Injection is site specific.
10.4-22	Section 10.4.5.3.2	Change: Add CDI brackets on "CTW basin structure" and sentences of "cooling tower. The mechanical draft CTWs cool the circulating water by discharging the water over a network of baffles in the tower. The water then falls to the basin beneath the cooling tower and, in the process, gives up heat to the atmosphere. The flow to the CTW can be diverted directly to the basin, bypassing the tower internals. This is achieved by opening the motor-operated bypass valve(s) while operating the number of circulating water pumps, as necessary. The makeup water pumps supply water to the CTWs to replace water losses due to evaporation, wind drift, and blowdown. The makeup water is supplied to the cooling tower basin. During normal plant operation, biocides are added to the circulating water to control biological growth, as needed. Blowdown from the CWS is taken from the cooling tower basin and is dechlorinated, as required, and discharged. Water being discharged into the lake/river/pond meets appropriate regulatory requirements.".

Page	Location (e.g., subsection with paragraph/ sentence/ item, table with row/column, or figure)	Description of Change
		Reason: Selection of cooling system, design of makeup water system, blowdown system and chemical treatment system are site specific
10.4-22	Section 10.4.5.3.4.1	Change: Add CDI brackets on sentences of “The CTWs are located outdoors, a sufficient distance from any equipment or structure important to reactor safety.”, “CTW basin” and “CTW basin structure”. Reason: Selection of cooling system is site specific.
10.4-23 - 24	Section 10.4.5.5	Change: Add CDI brackets on “makeup water pumps and blowdown pumps” and “in accordance with CWS CTW Performance Standard ASME PTC 23 (Reference 10.4-7)”. Reason: Design of makeup water pumps and blowdown pumps are site specific. And selection of cooling system is site specific.
10.4-24	Section 10.4.5.6	Change: Add CDI brackets on sentences of “Flow measurement for the makeup water to the CTW and for the CTW blowdown are provided.”, “CTW basin”, “the CTW basin activates makeup water flow from the raw water system when required by transmitting level signals to the CTW makeup water valves. The CTW basin makeup water valves can be aligned from the main control room.”, “CTW blowdown is controlled as a function of plant load (condensate flow) and circulating water conductivity, to maintain total dissolved solids (TDS) below a pre-established level. CTW blowdown also has a manual mode of operation.” and “The sampling system for the CWS periodically tests the circulating water quality to ensure that no harmful effects result to the system piping and valves due to improper water chemistry.”. Reason: Selection of cooling system, design of makeup water system and blowdown system are site specific.
10.4-25 - 27	Table 10.4.5-1	Change: Add CDI brackets on all of the contents in Table 10.4.5-1. Reason: Design of CWS is site specific.
10.4-28	Figure 10.4.5-1	Change: Add indication for CDI with cloud shape on all of this P&ID and note. Reason: Design CWS is site specific.

US-APWR DCD Revision 3 UTR 6 Change List

Page	Location (e.g., subsection with paragraph/ sentence/ item, table with row/column, or figure)	Description of Change
11.2-16	Section 11.2.3.1	Change: Add CDI brackets on “cooling tower blowdown”. Reason: Selection of cooling system is site specific.
14.2-64	Section 14.2.12.1.33	Change: Add CDI brackets on “the cooling tower fans”. Reason: Selection of cooling system is site specific.

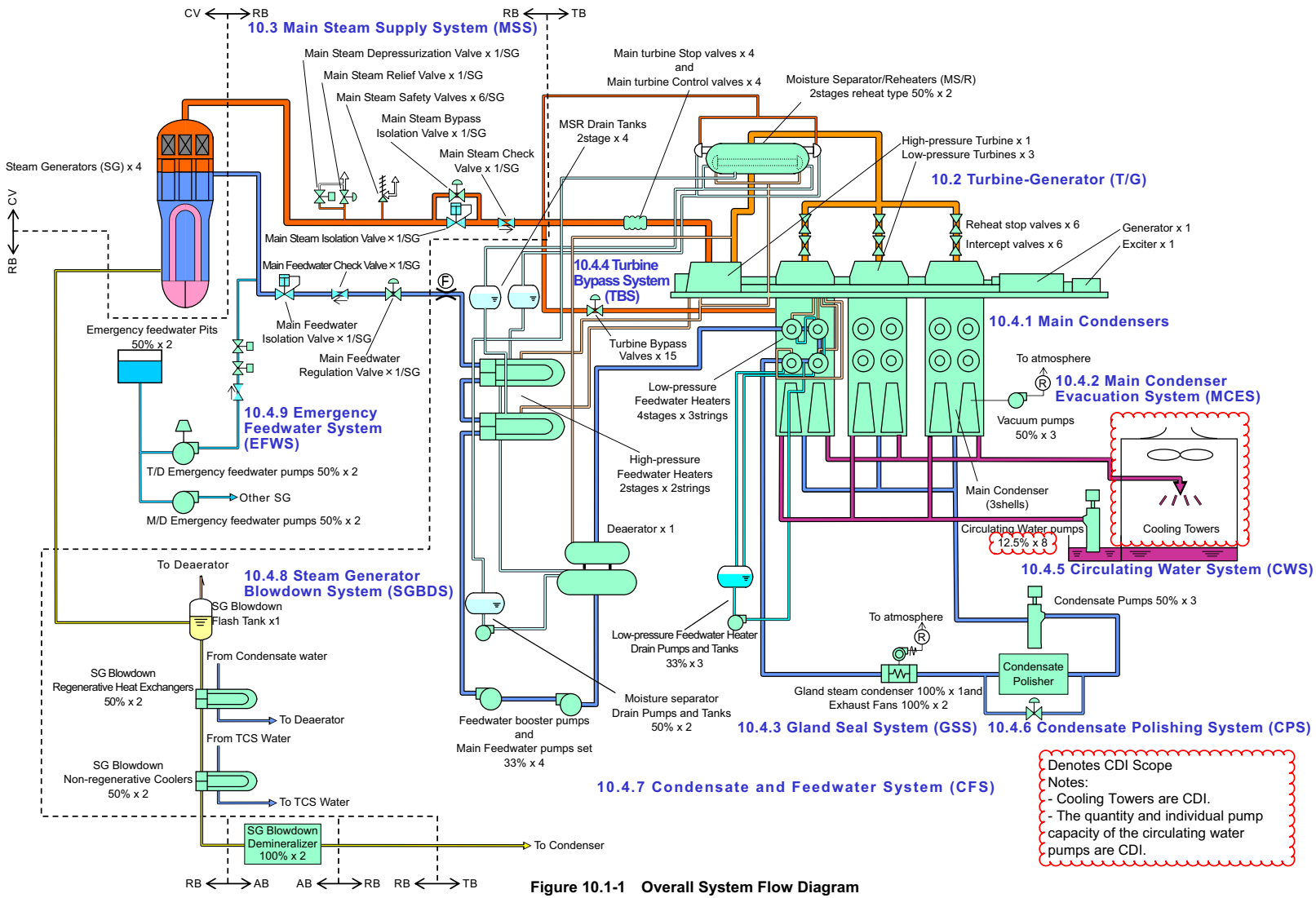

Figure 10.1-1 Overall System Flow Diagram

10.4.5 Circulating Water System

The circulating water system (CWS) supplies cooling water to remove heat from the main condensers, under varying conditions of power plant operation and site environmental conditions, described in Table 10.4.5-1.

10.4.5.1 Design Bases

10.4.5.1.1 Safety Design Basis

The CWS does not have a safety-related function and has no safety design basis.

10.4.5.1.2 Non safety Power Generation Design Basis

CWS removes heat load during startup, normal shutdown, transient condition, or turbine trip, when a portion of the main steam is bypassed to the main condenser via the turbine bypass valves (TBV). If the main condenser is not available during a loss of offsite power (LOOP) event, cooldown of the reactor is achieved by using the main steam depressurization valves rather than the turbine bypass system (TBS).

10.4.5.2 System Description

10.4.5.2.1 General Description

Figure 10.4.5-1 depicts the CWS flow diagram. The CWS draws water from the [[CWS cooling tower (CTW) Basin]], and returns water to [[the CWS CTWs]] after passing through main condenser. The CWS [[and CTW]] design and selection is subject to site-specific environmental conditions, as indicated in Table 10.4.5-1. The COL Applicant is to determine the site-specific final system configuration and system design parameters for the CWS including makeup water and blowdown.

The CWS has the following design functions:

The CWS supplies cooling water at the specified flow rate to condense the steam in the condenser, in accordance with the heat balance provided in Section 10.1.

The CWS is automatically isolated in the event of gross leakage into the turbine building (T/B) condenser area to prevent flooding of the T/B.

The CWS is designed such that a failure in a CWS component (piping, [[cooling tower]], expansion joint, pump, etc.) does not have a detrimental effect on any safety-related equipment/component.

The CWS is composed of [[eight, 12.5 percent capacity]] circulating water pumps, [[CTWs, CTW basins, makeup water pump(s), blowdown pump(s)]], and associated piping, valves, strainers, and instrumentation.

The circulating water pumps are located in the [[CTW Basins]], and take suction from the [[CTW basin]] and pump water through the main condenser under varying conditions of

power plant loading and design weather conditions. Design parameters for the major components are described in Table 10.4.5-1.

The CWS consists of [[two CTW assemblies]] which provide 100 percent cooling for normal power operation. [[Each CTW assembly contains two (2) back-to-back rows of cells]]. The discharge piping from the circulating water pumps is [[headered together into an intake manifold concrete pipe]], as shown in Figure 10.4.5-1 The CWS supply and discharge piping to the three shell main condenser contains butterfly-type isolation valves.

[[Makeup water is provided by the raw water system to compensate for the CTW evaporation, drift and blowdown. The CTW water chemistry is controlled by the CWS/raw water system chemical treatment system.]] It should be noted that three non-essential service water (non-ESW) pumps are located in the turbine building, and two pumps are operated and take suction from the CWS piping in the turbine building. The non-ESW flows through the turbine component cooling water system (TCS) heat exchangers, and connects back to the main condenser outlet piping. In addition to the CWS flow, [[the CTW]] are sized to also cool the non-ESW flow. The non-ESW is described in Subsection 9.2.9.

10.4.5.2.2 Component Description

The circulating water system consists of the following major components:

- Circulating water pumps
- [[Cooling towers and CTW basins]]
- Main condenser
- Condenser tube cleaning equipment
- [[CTW make up water and blowdown system]]
- [[Chemical treatment system]]
- Instrumentation and controls

10.4.5.2.2.1 Circulating Water Pumps

The circulating water pumps [[(eight 12.5% capacity)]] are [[vertical pump, wet pit type, single-stage mixed flow pumps driven by direct drive electric motors. Each cooling tower basin contains four circulating water pumps that are arranged in parallel.]]

10.4.5.2.2.2 [[Cooling Towers]]

[[Mechanical draft cooling towers have been selected for the CWS.

There are two CTWs each with 30 cells. Each cooling tower is arranged in two rows of 15 cells in each row, with the rows arranged back to back.

The cooling towers are located outdoors, a sufficient distance from any equipment or structure important to reactor safety.

The cooling towers and foundation are designed for wind load and earthquake loads.]]

10.4.5.2.2.3 Condenser tube cleaning

A condenser tube cleaning system is provided.

10.4.5.2.2.4 [[Cooling Tower Makeup Water Pumps]]

[[Two 100% capacity makeup water pumps provide makeup water. The makeup water pump provides the makeup water to the cooling tower basins. The makeup water pumps are vertical, driven by electric motors and are located in the raw water intake structure.]]

10.4.5.2.2.5 [[Blowdown Pumps]]

[[Two 100% capacity CTW blowdown pumps are located in each cooling tower basin. These pumps take suction from the CTW basin and discharge into the raw water source.]]

10.4.5.2.2.6 Piping and Valves

[[All above ground CWS piping is carbon steel piping designed, fabricated, installed and tested in accordance with ASME B31.1 Power Piping Code (Reference 10.4-3), with an internal coating of corrosion preventive compound. The underground portions of the circulating water system piping are constructed of pre-stressed concrete pressure piping with lining. The piping is arranged to allow easy access for inspection (i.e., access man ways for the large CWS underground pre-stressed concrete headers).]]

Motor-operated butterfly valves are provided in each of the circulating water lines at the inlet and exit from the condenser shell to allow isolation of portions of the condenser. Motor-operated butterfly valves are also provided at the discharge of each circulating water pump. [[Control valves are provided for the regulation of cooling tower blowdown and makeup.]]

10.4.5.2.2.7 Main Condenser

Refer to Subsection 10.4.1.

10.4.5.2.2.8 [[Chemical Injection]]

[[Biocide, algaecide, pH adjuster, corrosion inhibitor, and silt dispersant are injected into the CWS by the chemical injection system to maintain a non-scale forming condition and

to limit biological growth. The chemicals are injected by metering pumps. Chlorine concentration is measured by grab samples. Residual chlorine is measured to monitor the effectiveness. Chemical injection is interlocked with each circulating water pumps to prevent chemical injection when the circulating water pumps are not running. Chemical injection is also provided for in the makeup water and blowdown systems.]]

10.4.5.3 Operation

10.4.5.3.1 Plant Startup

CWS is in operation prior to establishing vacuum in the main condenser.

10.4.5.3.2 Normal Operation

The circulating water pumps take suction from the [[CTW basin structure]] and circulate the water through the tube side of the single-stage main condenser to maintain the required vacuum conditions, and CWS is returned to the discharge piping network in the [[cooling tower. The mechanical draft CTWs cool the circulating water by discharging the water over a network of baffles in the tower. The water then falls to the basin beneath the cooling tower and, in the process, gives up heat to the atmosphere.

The flow to the CTW can be diverted directly to the basin, bypassing the tower internals. This is achieved by opening the motor-operated bypass valve(s) while operating the number of circulating water pumps, as necessary.

The makeup water pumps supply water to the CTWs to replace water losses due to evaporation, wind drift, and blowdown. The makeup water is supplied to the cooling tower basin.

During normal plant operation, biocides are added to the circulating water to control biological growth, as needed.

Blowdown from the CWS is taken from the cooling tower basin and is dechlorinated, as required, and discharged. Water being discharged into the lake/river/pond meets appropriate regulatory requirements.]]

10.4.5.3.3 Plant Shutdown

When the condenser is available, the CWS operates until the RHR system is placed in service. The CWS is not required during safe-shutdown following a DBA, nor when the condenser is not available.

10.4.5.3.4 Abnormal Operation

10.4.5.3.4.1 Circulating Water Piping/Expansion Joint Failures

Large CWS leaks due to pipe/expansion joint failures is indicated and alarmed in the control room by a loss of vacuum in the condenser shell. The effects of flooding due to a CWS failure, such as the rupture of an expansion joint, assumes that the flow into the T/B

comes from both the upstream and downstream side of the break and also conservatively assumes that one system isolation valve does not fully close. This does not result in detrimental effects on safety-related equipment since there is no safety-related equipment in the T/B and the base slab of the T/B is located at grade elevation.

Water from a system rupture discharges from the T/B through a relief panel in the T/B wall before the level can rise high enough to cause damage. Site grading carries the water away from safety-related buildings.

Based on the above conservative assumptions, the CWS and related facilities are designed such that the selected combination of plant physical arrangement and system protective features ensures that credible potential circulating water spills inside the T/B remain confined inside the T/B condenser area.

[[The CTWs are located outdoors, a sufficient distance from any equipment or structure important to reactor safety.]] A postulated CWS line break in the yard area or a failure in the [[CTW basin]] does not impact any safety-related component or any component required for safe-shutdown of the plant, since the nuclear island is physically located far from the [[CTW basin structure]].

10.4.5.3.4.2 Leakage from/into the System

Any leakage from the CWS due to tube leakage into the main condenser is detected by the secondary sampling system (SSS).

Also, the TCS is maintained at a higher pressure than the non-ESW system (which draws water from CWS) to prevent leakage of the non-ESW into the TCS.

Small CWS leaks would drain into the T/B drain sump via the floor drains. The T/B drain sump is provided with sump pumps and with high-level alarms.

10.4.5.4 Safety Evaluation

The circulating water system is a non safety-related system, and hence, no safety evaluation is provided.

10.4.5.5 Tests and Inspections

All active components of the CWS are accessible for inspection during plant power generation. The circulating water pumps, [[makeup water pumps and blowdown pumps]] are tested in accordance with the Standards of the Hydraulic Institute (Reference 10.4-5).

Performance, hydrostatic, and leakage tests associated with preinstallation and preoperational testing are performed on the CWS in accordance with the standards of the Hydraulic Institute (Reference 10.4-5) and the American Water Works Association Code 504-70 (Reference 10.4-6). The performance along with the structural and leak-tight integrity of all system components are demonstrated by continuous operation.

A full power performance test of the CWS shall be performed following initial full power operation [[in accordance with CWS CTW Performance Standard ASME PTC 23 (Reference 10.4-7)]].

See Chapter 14 for details.

10.4.5.6 Instrumentation Applications

CWS valves, which control the flow path, can be operated by local controls or by remote controls located in the main control room.

The motor-operated circulating water pump discharge isolation valves are provided with position switches required for status indication in the main control room, and the interlock for the pumps.

Local pressure indications are provided on the circulating water pump discharge lines.

Differential pressure transmitters are provided to monitor the inlet/outlet differential pressure across each condenser tube bundle.

On the inlet and outlet branches to the condenser, local and remote temperature indications are provided.

[[Flow measurement for the makeup water to the CTW and for the CTW blowdown are provided.]]

Level instrumentation to monitor the water level in the condenser discharge water boxes are provided.

Level instrumentation in the main control room annunciates a low/high water level in the [[CTW basin]].

Level instrumentation in [[the CTW basin activates makeup water flow from the raw water system when required by transmitting level signals to the CTW makeup water valves. The CTW basin makeup water valves can be aligned from the main control room.]]

[[CTW blowdown is controlled as a function of plant load (condensate flow) and circulating water conductivity, to maintain total dissolved solids (TDS) below a pre-established level. CTW blowdown also has a manual mode of operation.]]

[[The sampling system for the CWS periodically tests the circulating water quality to ensure that no harmful effects result to the system piping and valves due to improper water chemistry.]]

Level switches are provided in the T/B to monitor flooding condition and to trip the CWS pumps and close the valves of the CWS in case of a system component failure, and high-high water level condition.

Various status indications and alarms are provided for the CWS in the main control room.

Table 10.4.5-1 Design Parameters for Major Components of Circulating Water System (Sheet 1 of 3) (see Note 1)

Ambient design temperature	-
Design wet bulb temperature, (°F) (5% Exceedance)	76 (78 including 2 °F recirculation)
Circulating water pumps	-
Number of pumps	8
Flowrate (gpm)	164,715
Mechanical draft cooling towers	-
Number of towers	2
Number of cells in each cooling tower	30
Design inlet temperature (°F)	103.7
Design outlet temperature (°F)	88.5
Design temperature rise (°F)	15.2
CTW design approach temperature (°F)	10.5
Design flowrate (gpm)	1,290,720 plus 27,000 (for Non essential service water)

Table 10.4.5-1 Design Parameters for Major Components of Circulating Water System (Sheet 2 of 3) (see Note 1)

Makeup water pumps	-
Number of pumps	2
Flowrate (gpm)	31,200
Blowdown pumps	-
Number of pumps	2
Flowrate (gpm)	12,900

Table 10.4.5-1 Design Parameters for Major Components of Circulating Water System (Sheet 3 of 3) (see Note 1)

Piping and components design data	-
Design pressure/temperature, (psig/°F)	85/110
Material for Intake and discharge tunnel	Pre-stressed reinforced concrete with appropriate lining, if required by the CWS water chemistry.
Material for CWS above ground piping	ASTM A106, Grade B seamless carbon steel piping with lining ASTM A134, Grade C seam-welded carbon steel piping with lining
Type of CWS major valves	AWWA C504

Note:

1. Design parameters are dependent on site-specific conditions, and these values will change.

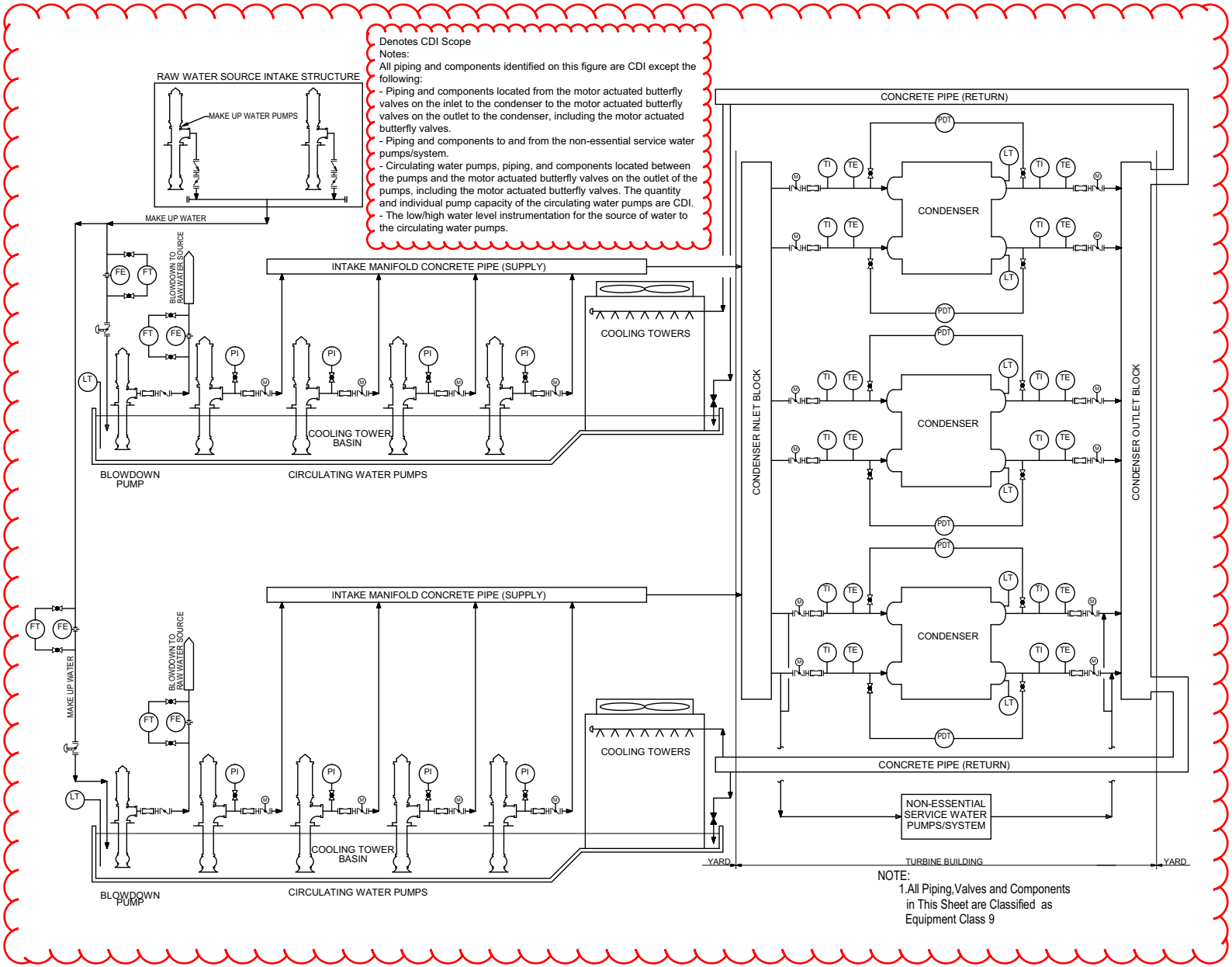

Figure 10.4.5-1 Circulating Water System Piping and Instrumentation Diagram

10.4.13 References

10.4-1 General Design Criteria for Nuclear Power Plants, NRC Regulations Title 10, Code of Federal Regulations, 10CFR Part 50, Appendix A.

10.4-2 The Heat Exchange Institute, Standards for Steam Surface Condensers, Addendum 1 to 9th Edition, 2002.

10.4-3 Power Piping, ASME B31.1.

10.4-4 The Heat Exchange Institute, Performance Standards for Liquid Ring Vacuum Pumps.

10.4-5 Hydraulic Institute, Hydraulic Institute Standards for Centrifugal, Rotary and Reciprocating Pumps, December, 2000.

10.4-6 American Water Works Association, Rubber-Seated Butterfly Valves, ANSI/AWWA C504.

10.4-7 [[Power Test Code for Atmospheric Water Cooling Equipment, ASME PTC 23, 2003.]]

10.4-8 Rules for Construction of Nuclear Facility Components, ASME Boiler and Pressure Vessel Code. Division 1, Section III, 2001 Edition with 2003 Addenda.

10.4-9 SEISMIC DESIGN CLASSIFICATION, Regulatory Guide 1.29 Rev.4, March 2007.

10.4-10 U.S. Nuclear Regulatory Commission, Evaluation of Water Hammer Occurrence in Nuclear Power Plants, NUREG-0927, Revision 1, in March 1984.

10.4-11 U.S. Nuclear Regulatory Commission, DESIGN GUIDELINES FOR AVOIDING WATER HAMMERS IN STEAM GENERATORS REVIEW RESPONSIBILITIES, NUREG-0800 Branch Technical Position 10-2.

10.4-12 Rules for Inservice Inspection of Nuclear Power Plant Components, ASME Boiler and Pressure Vessel Code, Section XI, Division 1.

particular equipment. The decontamination factors are taken from NUREG-0017 Rev.1(Ref.11.2-13) and are presented in Table 11.2-7. The calculations are made based on the assumption as follows:

- The liquid effluent from the primary system is processed by the LWMS and is discharged without reuse.
- The steam generator blowdown is treated and returned to the condenser.

The release physical location and configuration of the treated effluent is site specific. Detailed design information such as release point, effluent temperature and flow rate, and size and shape of flow orifices, is to be presented in the site specific detail design. The COL applicant is responsible for ensuring that the site-specific information of the LWMS, e.g., radioactive release points, effluent temperature, shape of flow orifices, etc., is to be provided in the COLA(COL11.2(2)).

The annual average release of radionuclides is estimated by the PWR-GALE Code (Ref.11.2-13) with the reactor coolant activities that is described in Section 11.1. The parameters used by the PWR-GALE Code are provided in Table 11.2-9, and the calculated effluents are provided in Table 11.2-10. The calculated effluents for the maximum releases are provided in Table 11.2-11.

The calculated effluent concentrations using annual release rates are then compared against the concentration limits of 10 CFR 20 Appendix B (Ref. 11.2-8); see Table 11.2-12 and Table 11.2-13.

The calculation uses 12,900 gpm [[cooling tower blowdown]] as dilution water (See Chapter 10, Subsection 10.4.5). The ratios to the concentration limits of 10 CFR 20 Appendix B (Ref 11.2-8) are 8.10E-02 (with expected releases) and 3.09E-01 (with maximum defined fuel defects), and these values are less than the allowable value of 1.0.

The individual doses are evaluated with LADTAP II Code (Ref. 11.2-14). The parameters used in the LADTAP II Code are listed in Table 11.2-14, and calculated doses are listed in Table 11.2-15. Based on these parameters, the dose to total body is 1.98 mrem/yr(Child) and the dose to organ is 2.54 mrem/yr (Child's liver). These values are less than the criteria of 3 mrem/y and 10 mrem/yr, respectively, as specified in 10 CFR 50 Appendix I (Ref. 11.2-2).

The COL applicant is to calculate doses to members of the public following the guidance of RG 1.109 (Ref 11.2-15) and RG 1.113 using site-specific parameters, and compares the doses due to the liquid effluents with the numerical design objectives of Appendix I to 10 CFR 50 (Ref 11.2-10) and compliance with requirements of 10 CFR 20.1302, 40 CFR 190.

11.2.3.2 Radioactive Effluent Releases due to Liquid Containing Tank Failures

In case of a failure of a tank containing radioactive liquid, the radioactive concentrations in the potable water supply located in the unrestricted area are evaluated with the

4. Required support systems are available.

5. The condensate system, instrument air system, circulating water, vacuum pump seal water cooler, gland sealing system, auxiliary steam supply system and turbine component cooling water system are available.

6. Turbine is on turning gear.

C. Test Method

1. Verify operation of the vacuum pumps and system valves.

2. Verify calibration and operation of the system instrumentation, controls, actuation signals, and interlocks.

3. Verify capability of the vacuum pumps to establish the required vacuum in the main condenser.

4. Verify indications and alarms.

D. Acceptance Criteria

1. The main condenser evacuation system performs as described in Subsection 10.4.2.

2. Indications and alarms operate as described in Subsection 10.4.2.

14.2.12.1.33 Circulating Water System Preoperational Test

A. Objective

1. To demonstrate the operation of the circulating water pumps, [[the cooling tower fans]] and associated automatic operated valves.

B. Prerequisites

1. Required construction testing is completed.

2. Component testing and instrument calibration is completed.

3. Test instrumentation is available and calibrated.

4. Required support systems are available.

5. [[The cooling tower fans are available.]]

6. The following systems are available:

   a. Instrument and service air systems.

   b. [[Makeup water pump system.]]

c. [[Blowdown water system.]]

d. Demineralized water system.

C. Test Method

1. Verify controls and functions of circulating water pump [[and cooling tower fans]].
2. Verify strokes and functions of motor-operated valves and control valves.
3. Operate circulating water pumps and verify operating condition.
4. Verify indications and alarms.

D. Acceptance Criteria

1. The circulating water system performs as described in Subsection 10.4.5.
2. Indications and alarms operate as described in Subsection 10.4.5.

14.2.12.1.34 Essential Service Water System (ESWS) Preoperational Test

A. Objective

1. To demonstrate the operation of the ESWS.

B. Prerequisites

1. Required construction testing is completed.
2. Component testing and instrument calibration is completed.
3. Test instrumentation is available and calibrated.
4. Required support systems are available.

C. Test Method

1. Verify manual and automatic system controls.
2. Verify system flowrates and performance of ESWS pumps.
3. Verify alarms and status indications are functional.
4. Verify the absence of indications of water hammer by re-activating the ESW pump after a simulated LOOP as specified in Subsection 14.2.12.1.45, Class 1E Bus Load Sequence Preoperational Test.

D. Acceptance Criterion

1. The ESWS operates within design limits, as described in Subsection 9.2.1.

1-6 SGBDS

Page	Location (e.g., subsection with paragraph/ sentence/ item, table with row/column, or figure)	Description of Change
9.3-14	Section 9.3.2.2.5	Change: Add CDI brackets on “waste water system (WWS)”. Reason: WWS is system outside of standard design buildings and its design is site specific.
9.3-17 - 19	Section 9.3.3.1.2	Change: Add CDI brackets on “WWS”. Reason: WWS is system outside of standard design buildings and its design is site specific.
9.3-20	Section 9.3.3.2.3	Change: Add CDI brackets on “WWS”. Reason: WWS is system outside of standard design buildings and its design is site specific.
10.4-63	Section 10.4.8.1.2	Change: Add CDI brackets on “WWS”. Reason: WWS is system outside of standard design buildings and its design is site specific.
10.4-64 - 65	Section 10.4.8.2.1	Change: Add CDI brackets on “WWS”. Reason: WWS is system outside of standard design buildings and its design is site specific.
10.4-66	Section 10.4.8.2.2.1	Change: Add CDI brackets on “WWS”. Reason: WWS is system outside of standard design buildings and its design is site specific.
10.4-67	Section 10.4.8.2.2.3	Change: Add CDI brackets on “WWS”. Reason: WWS is system outside of standard design buildings and its design is site specific.
10.4-67	Section 10.4.8.2.2.4	Change: Add CDI brackets on “WWS”. Reason: WWS is system outside of standard design buildings and its design is site specific. Change: Delete “Finally” Reason: Editorial
10.4-68	Section 10.4.8.2.2.5	Change: Add CDI brackets on “WWS”. Reason: WWS is system outside of standard design buildings and its design is site specific.

US-APWR DCD Revision 3 UTR 6 Change List

Page	Location (e.g., subsection with paragraph/ sentence/ item, table with row/column, or figure)	Description of Change
10.4-76 - 77	Figure 10.4.8-1	Change: Add indication for CDI with cloud shape on area of WWS on P&ID. Reason: WWS is system outside of standard design buildings and its design is site specific.
14.2-112	Section 14.2.12.1.83	Change: Add CDI brackets on “WWS”. Reason: WWS is system outside of standard design buildings and its design is site specific.

The SSS is designed to continuously monitor water samples from the turbine cycle, as listed in Table 9.3.2-4. Water quality analyses are performed on these samples to determine pH and conductivity levels, dissolved oxygen, residual oxygen scavenger, silica, chloride, sodium, and sulfate. These measurements are used to control water chemistry and to permit appropriate corrective action by the plant operating staff. In addition, grab sample capabilities are provided at each of these monitoring points to analyze other chemicals.

The purpose of the SSS is to provide the data necessary for controlling the water quality of the secondary plant systems listed in Table 9.3.2-4. The SSS is located in the T/B.

The SSS samples are specified in Table 9.3.2-4. Primary coolers are provided for the samples whose temperatures exceed 125 ^{o}F. All samples are conditioned to 115 ^{o}F by cooling water or constant temperature bath to approximately 40 psig by pressure regulators.

Sample points may be used to continuously monitor representative samples. The sample line and sample sink drain into the SSS are collected and drained to the T/B floor sump. Each sample line has a grab sampling capability for laboratory analysis. Sampling point is also provided circulating water system (CWS) to ensure that no harmful effects will result to CWS piping and valves due to improper water chemistry.

9.3.2.2.5 Steam Generator Blowdown Sampling System

The SGBDSS is provided to control the steam generator (SG) secondary side water quality and to detect a leak or failure of SG tubes. The SGBDSS includes blowdown lines and blowdown sample lines. The SGBDSS also includes blowdown sample coolers, pressure reducing valves, a radioactive process monitor, instruments, piping and valves. The SGBDSS components are described in Chapter 10, Subsection 10.4.8. The sample points are discussed in Table 9.3.2-5.

The SGBDSS performs the following functions:

- Monitors secondary water quality in SGs to maintain acceptable secondary coolant water chemistry.
- Detects primary to secondary SG tube leakage.
- Containment isolation.

Based on radioactivity and water chemistry monitoring, the blowdown water is purified by its own polishing system. Otherwise, the blowdown is sent to the [[waste water system (WWS)]] when disposal is required due to its chemical content; or during start-up. Blowdown water can also be sent to the LWMS when disposal is required due to radioactivity content.

Blowdown sample water is passed through the blowdown sample coolers and pressure reducing valves for sampling. Blowdown samples are used periodically to check the Choride and Sulfate of the SG secondary water, continuously to monitor the specific

- The equipment and floor drainage systems are not safety-related and serve no safety-related function except the isolation valves installed in the drainage piping from engineered safety feature (ESF) equipment rooms.

- The equipment and floor drainage systems are designed to prevent damage to safety-related systems, structures, and equipment.

- Equipment and floor drainage system failures will not prevent the proper function of any safety-related equipment.

- The drain systems from ESF equipment rooms are designed to prevent flooding due to backflow by the virtue of the difference in elevation between the ESF rooms and the collection sump.

- The floor drains in ESF area are capable to remove expected fire fighting water flow.

- ESF room drain isolation valves are also provided on the ESF room drain piping in order to protect against flooding due to backflow. These isolation valves are safety-related and serve safety-related function.

- The equipment and floor drainage systems are designed to be protected against flood (Refer to Chapter 3, Section 3.4) internally and externally generated missiles (Refer to Chapter 3, Section 3.5) and pipe ruptures (Refer to Chapter 3, Section 3.6).

9.3.3.1.2 Power Generation Design Bases

- The Radioactive drainage system and non-radioactive drainage system are separated, however, in case that radioactive water flows into non-radioactive system (e.g. CCW component failure), potentially radioactive contaminants are diverted from the non-radioactive drainage system to the LWMS. This is in conformance to the requirement of GDC 60.

- The LWMS collects potentially radioactive liquid wastes, at atmospheric pressure, from equipment and floor drainage in the containment vessel, R/B, A/B and access building. All such drainage is conveyed by gravity to sumps or tanks within the respective buildings and pumped to the waste holdup tanks.

- Chemical and other wastes collected from laboratory, decontamination solutions, and laboratory sinks drain to the chemical drain tank of the LWMS.

- The waste from hand and eyewash stations and the personnel decontamination shower facilities is collected in the detergent drain tank of the LWMS.

- The T/B drain system collects the non-radioactive floor and equipment drains in the non-radioactive drain sump. The liquid waste is sent to the [[WWS]]. In the unlikely event, that the fluid becomes radioactive, a radiation monitor determines

1. Collection piping: In all potentially radioactive areas, the collection system piping for the liquid waste is stainless steel. Potentially radioactive laboratory and decontamination waste, regeneration waste, and detergent waste collection system piping is stainless steel. Non-radioactive collection piping is made of stainless steel.

2. Collection sumps: The centrally located sumps collect normal and potentially radioactive liquid waste. The non-radioactive collection sumps are constructed of concrete with a corrosion resistant coating or liner. These sumps are fitted with a vent connected to the ventilation system to remove any potential radioactive gases. The sumps also collect discharge by gravity from areas that are maintained under a slight negative pressure boundary.

3. Reactor building equipment and floor drains: The R/B equipment and floor drainage piping are arranged so that any ESF equipment room leakage does not penetrate into other ESF equipment rooms. Discharge from each ESF equipment room is drained by gravity to the either of R/B sump tanks. The drainage piping from each ESF room is equipped with a normally closed, manually operated valve, which is located outside the equipment room.

4. Miscellaneous equipment drains: Equipment which may be pressurized during drainage, and which drains via direct or indirect drain connection to the floor drain system, is designed so that the equipment drain discharge flow will not exceed the gravity flow capacity of the drainage header at atmospheric pressure.

5. Floor drains: All floor drains are installed with rims which are flush with the low-point elevation of the finished floor. All floor drains discharge directly into the respective building sumps or sump tanks.

6. Turbine building equipment and floor drains. The non-radioactive liquid wastes generated in the T/B, including equipment and floor drains and leakages are generally collected in the non-radioactive drain sump in the T/B.

   Turbine building sump pumps discharge to the [[WWS]] prior to discharge to the environment. This discharge is sent via the same discharge path used by the SGBDS (see Section 10.4.8). When radioactive contamination in the discharge from the sump is detected and alarmed in the MCR, the transfer valve to the [[WWS]] is closed. Following operator initiation, the discharge from the sump is sent to the A/B floor drain sump from which it is transferred to the LWMS for processing prior to discharge to the environment.

7. Equipment and floor drains in the containment, except the reactor coolant drain, are collected in the C/V sump via the drain piping. PS/B equipment and floor drains are collected in the R/B non-radioactive sump.

9.3.3.2.3 System Operation

The equipment and floor drainage systems operate during all modes of operation. The various building drains directly to the corresponding collection point by gravity. The sump pump operation is automatic with level switches. These pumps are automatically started

or stopped by a level preset by the local instrumentation in the sump or a sump tank. The T/B sump pumps are not required to operate during design base accident.

Sumps are provided with duplex pumps or with simplex pumps. The T/B sump pumps are aligned to discharge to the waste water system for treatment prior to discharge to the environment. If the radiation level detected in the fluid by the radiation monitor is above a predetermined set point, the discharge from the sump is sent, following operator initiation to the A/B floor drain sump to be sent to the LWMS for processing.

The subsystems and their operation are described in subsequent paragraphs according to their classification as non-radioactive or potentially radioactive.

All liquid wastes drained from potentially radioactive drainage piping are conveyed by gravity to the respective buildings radioactive sump or tanks. The liquid is then discharged to the LWMS for processing.

A. Oily waste

Potentially radioactive oily waste is drained into the radioactive sump tanks within the respective building. The separated oil is collected for offsite disposal and the clarified effluent is discharged to the LWMS for processing. Refer to Chapter 11.

B. Chemical waste

The chemical wastes, containing chemicals and corrosive substances are discharged to the chemical drain tank.

C. Liner plate leakage detection

The leakage from the spent fuel pit, fuel transfer canal, cask pit and the fuel inspection canal is drained to the R/B sump tank.

D. Non-radioactive drain collection points

- Reactor building non-radioactive drain sumps

  These sumps are located in the R/B and collects all non-radioactive equipment and floor drainage by gravity. The sump pumps normally discharge to the T/B sump. Both sump pumps are operated by the level instrumentation in each sump.

- Turbine building sump

  The T/B drain sump collects drain from all equipment and floor drainage in the T/B and non-radioactive drain sump. This sump normally discharges to the [[WWS]] for treatment. However, if the liquid draingage should become contaminated, the radiation monitor will detect a concentration exceeding the predetermined setpoint which will activate an alarm in the MCR for operator actions and will also activate the closure of the transfer valves. Following operator initiation, the contaminated waste is then sent to the LWMS.

- The safety-related portion of the SGBDS is designed to function in the normal and accident environments identified in Section 3.11.
- The safety-related portion of the SGBDS is designed to protect against dynamic effects associated with the postulated rupture of piping as described in Section 3.6.
- The safety-related portion of the system is designed such that a single failure in the SGBDS will not result in:
  - Loss of integrity of other blowdown lines
  - Loss of the capability of the emergency core cooling system (ECCS) to effect a safe reactor shutdown
  - Transmission of excessive loading to the containment pressure boundary

10.4.8.1.2 Non-safety Power Generation Design Bases

The SGBDS draws water from the secondary side of each steam generator as required to:

- Assist in controlling secondary side water chemistry during normal plant operation, plant start up operation and abnormal water chemistry conditions at rated power operation.
- Continuously remove impurities including radioactive impurities, if present, from the steam generator bulk water and purify the blowdown water.
- Sample blowdown water for chemistry analysis and detect primary-to-secondary leakage with SG blowdown water radiation monitor.
- Cooldown the steam generator for inspection and maintenance.
- Establish and maintain steam generator wet layup conditions during plant shutdown periods.
- Drain the secondary side of the steam generator for maintenance.
- Monitor the concentration of radioactive material in the processed blowdown water with SG blowdown return water radiation monitor downstream of blowdown demineralizers.
- Discharge secondary side water to [[waste water system (WWS)]] or liquid waste management system (LWMS) by bypassing normal processing equipment if secondary water chemistry becomes abnormal water conditions.
- Divert from the blowdown demineralizers to [[WWS]] or the condenser if the blowdown water temperature exceeds the predetermined temperature to protect demineralizers resin.

10.4.8.2 System Description

10.4.8.2.1 General Description

The SGBDS flow diagrams are shown in Figures 10.4.8-1 and 10.4.8-2. Classification of equipment and components in the SGBDS is provided in Section 3.2.

The SGBDS equipment and piping are located in the containment, the reactor building, the auxiliary building and the turbine building (T/B).

The SGBDS consists of a flash tank, regenerative heat exchangers, non-regenerative coolers, filters, demineralizers, piping, valves and instrumentation. The flash tank, regenerative heat exchangers and non-regenerative coolers are provided to cool the blowdown water with heat recovery, while the filters and demineralizers are provided to purify the blowdown water.

One blowdown line per steam generator is provided. The blowdown from each steam generator flows independently to the flash tank. The blowdown water from the flash tank flows via one common line to regenerative heat exchangers and non regenerative coolers. Blowdown is split into two trains ahead of the heat exchangers. Common discharge from the coolers flows to the filters and demineralizers, where the flow is split into two trains. The purified water from the demineralizers flows to the condenser via a common discharge line.

The blowdown line from each steam generator is provided with two flow paths, a line for purifying blowdown water used during normal plant operation and a line for discharging the blowdown water to the [[WWS]] or the condenser used during startup and abnormal water chemistry conditions.

The US-APWR SG's utilize a "peripheral" blowdown system arrangement. In this arrangement, blowdown holes are drilled from approximately 7 inches below the secondary surface of the tubesheet and intersect with the peripheral groove on the secondary face of the tubesheet. This arrangement is shown as Figure 10.4.8-3 and facilitates effective sludge removal from the tubesheet. The blowdown from each steam generator is depressurized by a throttle valve located downstream of the isolation valves. The throttle valves can be manually adjusted to control the blowdown rate.

The depressurized blowdown water flows to the flash tank, where water and flashing vapor are separated. The vapor is diverted to deaerator and the water is transferred to regenerative and non-regenerative heat exchangers for further cooling. The condensate and feedwater system (CFS) provides the condensate in regenerative heat exchanger(s) to recover thermal energy.

The turbine component cooling water system (TCS) cools blowdown water in the non-regenerative heat exchanger to protect the demineralizer resin prior to purifying the blowdown water. The impurities from the cooled blowdown water are removed by the inlet filters, demineralizers and outlet strainers. SG blowdown demineralizers consist of two cation demineralizers and two mixed bed demineralizers. The purified water is returned to the condenser.

A local grab sample point which is provided downstream of each demineralizers, a

radiation monitor downstream of demineralizers outlet strainers and a radiation monitor in the sample line measures impurities concentration and the radioactivity level in the blowdown water. In case of SG tube leakage and when abnormally high radiation level is detected, the blowdown lines are isolated and the blowdown water included in SGBDS is transferred to waste holdup tank in the liquid waste management system (LWMS). See Subsection 11.2.2 for details.

Regenerative heat exchangers and non-regenerative coolers consist of two- 50 % capacity trains. When blowdown flow rate is less than 0.5% Maximum Steaming Rate (MSR) at rated power, one regenerative heat exchanger and one non-regenerative cooler are in operation while the other regenerative heat exchanger and non-regenerative cooler can remain on standby or isolated for maintenance.

Demineralizers include two - 100 percent trains. Each demineralizer train includes cation demineralizer and mix bed demineralizer.

Furthermore filters are installed upstream these demineralizers and strainers are also installed downstream these demineralizers in this SG blowdown line.

During plant startup, blowdown rate is up to approximately 3% of MSR at rated power. In this mode, blowdown liquid flows to the [[WWS]] prior to discharge or to the condenser for processing in the Condensate Polishing System (CPS). During normal operation, blowdown rate is approximately 0.5 to 1% of MSR at rated power. At the 1% of MSR at rated power blowdown rate, both cooling trains are used.

With abnormal water chemistry, the flow of blowdown rate up to approximately 3% of MSR at rated power is directed to the [[WWS]] for processing prior to discharging to the environment.

A blowdown sample line from each steam generator is provided for sampling. A SG blowdown sample cooler is located in each of these lines for cooling blowdown liquid to reduce blowdown temperature suitable for the secondary water quality monitoring station. Cooled liquid flows to secondary water quality monitoring station, SG blowdown water radiation monitor and sample sink for taking grab samples if an SG tube leak occurs.

A secondary water quality monitoring station measures pH, specific conductivity, cation conductivity and sodium ion concentration in the secondary water continuously. Furthermore grab sampling points are provided for sampling secondary water and analyzing chloride and sulfate ion concentration in the secondary water.

Two isolation valves on each blowdown line are located in the main steam/feedwater piping area. The SG blowdown water is transferred through each SG blowdown line under normal operating and transient conditions. The isolation valves close automatically upon receipt of one of the following signals:

- High radiation signal from SG blowdown return water radiation monitor
- High-high radiation signal from SG blowdown water radiation monitor

- High-high radiation signal from condenser vacuum pump exhaust line radiation monitor
- Emergency feedwater pump automatic actuation signal

In addition, the containment isolation valve closes automatically upon receipt of containment isolation signal.

The containment isolation valve in the blowdown sample line closes automatically upon receipt of one of the following signals:

- High radiation signal from SG blowdown return water radiation monitor
- High-high radiation signal from SG blowdown water radiation monitor
- High-high radiation signal from condenser vacuum pump exhaust line radiation monitor
- Emergency feedwater pump automatic actuation signal
- Containment isolation signal

10.4.8.2.2 System Operation

The various modes of operation are as follows:

10.4.8.2.2.1 Plant Startup

In this mode, the reactor is brought from cold shutdown to no-load power operating temperature and pressure.

The steam generator secondary side water chemistry is brought to operating specifications as rapidly as possible. High blowdown rates (up to 3% of MSR at rated power), are used to reduce the solids content in the steam generators. SG blowdown water is directed to the [[WWS]] or the condenser without passing through the SG blowdown demineralizers. The SG bulk water chemistry condition is maintained by discharging the SG blowdown water to [[WWS]]. To facilitate oxygen removal and enhance reduction of corrosion products in the system, chemical injection is provided in all volatile treatment (AVT) mode with higher levels of hydrazine.

As long as the SG blowdown water can be returned to the condenser, the SG blowdown water is transferred to the condenser for purification by the condensate polishers located in CPS .

10.4.8.2.2.2 Normal Operation

After the plant reaches rated power conditions, the hydrazine concentration is reduced to the concentration level for normal operation and the system remains in AVT mode. The normal blowdown flowrate varies from approximately 0.5 % to 1 % of MSR at rated power.

During normal operation, including SG tube leakage and condenser tube leakage within allowable limits and with low impurities, the CFS water chemistry is high in pH.

SG blowdown water is cooled in series of regenerative heat exchanger and non-regenerative cooler, purified by SG blowdown demineralizers and discharged to the condenser hotwell. After the initiation of purification in the SG blowdown demineralizers, all condensate water bypasses CPS.

The radioactive spent resins are transferred to solid waste management system (SWMS) for disposal, when SG tube leakage exceeds allowable limits and resins are non recyclable. During normal operation without SG tube leakage, non-radioactive spent resins are transferred to a non-radioactive spent resin holding vessel (SRHV) in CPS. These resins are shipped to an off-site facility for regeneration.

10.4.8.2.2.3 Plant Shutdown

In this mode, the reactor is brought from no-load power operating temperature and pressure to a cold shutdown.

High blowdown rates (up to 3% MSR at rated power) may be used to reduce the solids contents in the steam generators and maintain secondary water chemistry within allowable limits. The blowdown water is returned to the condenser or to the [[WWS]].

10.4.8.2.2.4 Steam Generator Drain

The SGBDS is used to drain the steam generators. In this mode, the blowdown drain water is directed to the condenser or to the [[WWS]]. ~~Finally~~ A small amount of drain water potentially remains in the steam generator blowdown piping and the drain water is discharged to the containment sump through a dedicated drain line which branches off from the lowest point of the blowdown line. The COL Applicant is to describe the nitrogen or equivalent system design for Steam Generator drain.

10.4.8.2.2.5 Abnormal Operation

(1) Condenser Tube leakage

The CPS goes into service and maintains the condensate water quality. SG blowdown water can be purified by the SG blowdown demineralizers to support purification of CPS or diverted directly to the condenser.

(2) SG blowdown lines isolation signals

When SG blowdown line isolation signals are generated, SG blowdown lines are isolated. Following recovery from this event, SG blowdown water is initially routed directly to the condenser and when the blowdown water quality is acceptable, SG blowdown demineralizers start purifying the blowdown water.

(3) Abnormal water chemistry condition

When the impurities concentrations at the outlet of the SG blowdown demineralizers increase beyond the predetermined limit, blowdown water is diverted to the condenser of to the [[WWS]].

(4) Malfunction in SGBDS

SGBDS lines are automatically isolated, in the case of a malfunction of regenerative heat exchangers, non-regenerative coolers, flash tank vent line and the detection of one of the following conditions:

- The outlet temperature of Non-regenerative coolers is equal to or higher than the predetermined set point.
- High Pressure in the SG blowdown flash tank
- High-high water level in the SG blowdown flash tank

In these cases, the blowdown water is diverted to the condenser and the CPS is placed in operation, as required.

Similarly when high pressure or an abnormally high water level is detected in the deaerator, the SG blowdown water is diverted without purifying to the condenser and the CPS is placed in operation, as required.

After the condition is restored, the SGBDS is placed in service.

(5) SG Tube Leakage

In the case of primary to secondary SG tube leakage within allowable tube leak rate, as specified in the plant technical specifications, blowdown water continues to be purified with SG blowdown demineralizers to remove the radioactivity entering from leaking SG tube(s).

To minimize the contaminated radioactive spent resin, the secondary water is switched to low pH AVT operation. Spent resin is transferred to SWMS for disposal.

When the SG tube leak exceeds the allowable limits, the SG blowdown lines are automatically isolated upstream of the SG blowdown demineralizers by the SG blowdown return water radiation monitor high signal.

10.4.8.2.3 Component Description

Component design parameters are provided in Table 10.4.8-1. The US-APWR SG Blowdown system design specifies low-alloy steel and stainless steel for most of the piping and components in order to preclude the need for the application of the FAC monitoring program. For any portion of the piping and /or components that are made of carbon steel, the SGBDS relies on the control of the water chemistry as described in DCD Subsection 10.3.5, Water Chemistry. This control minimizes the potential for flow

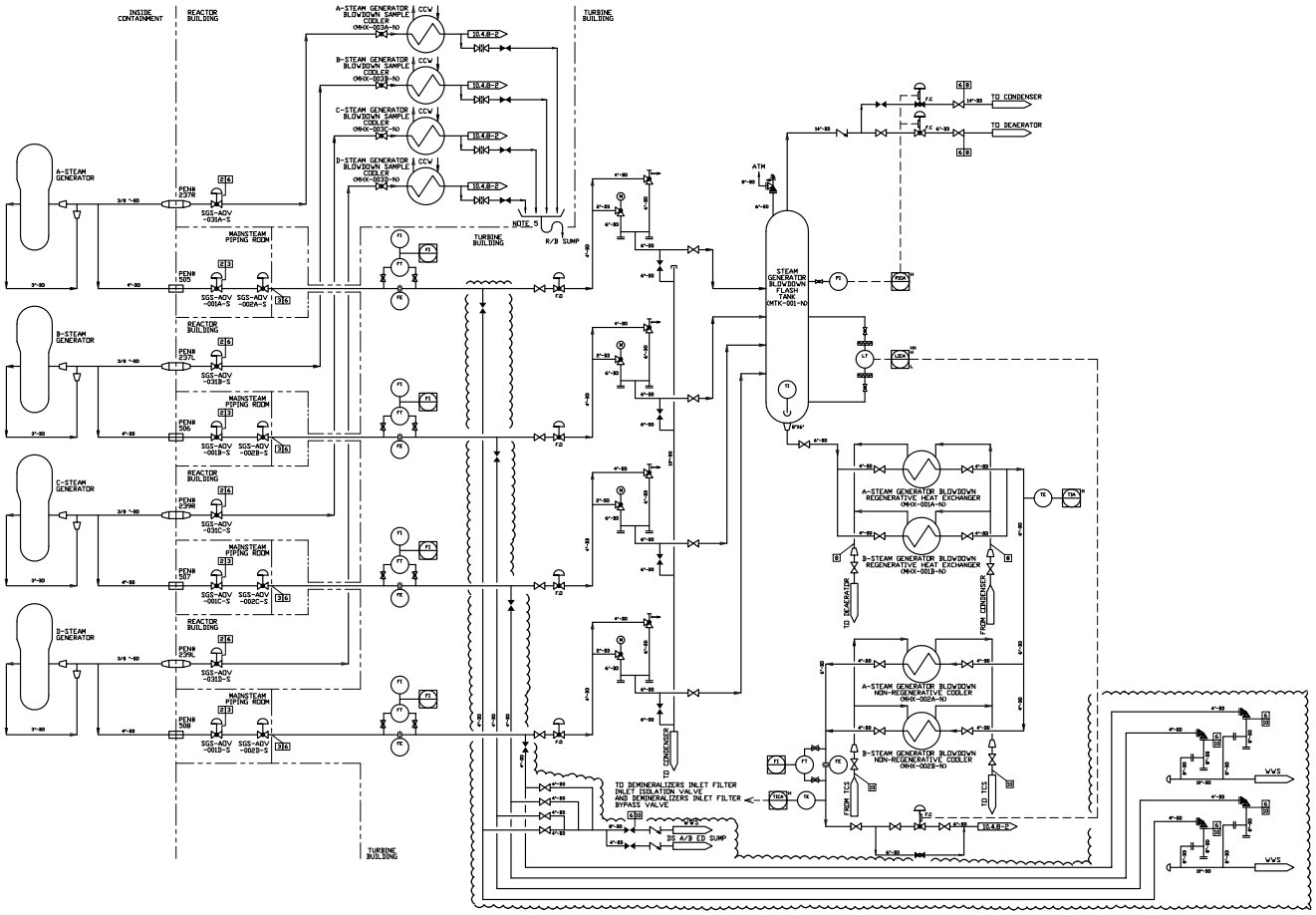

Figure 10.4.8-1 Steam Generator Blowdown System Piping and Instrumentation Diagram (1/2)

This drawing will be replaced with revised version.

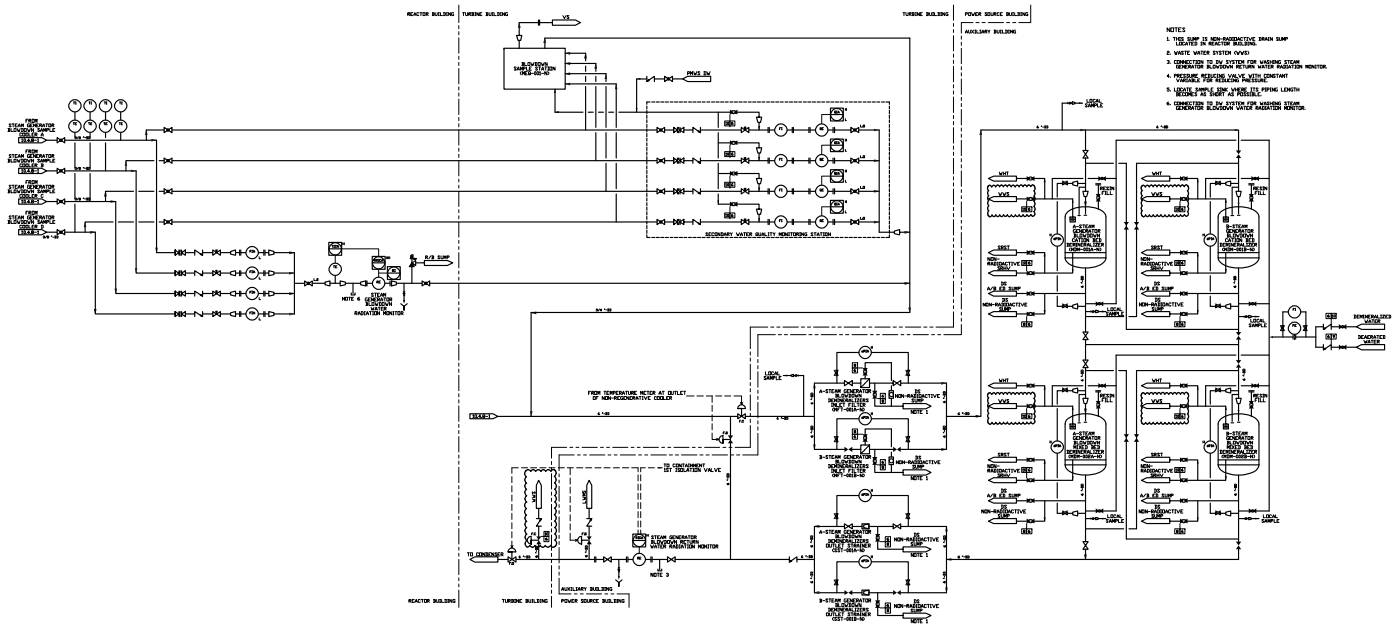

Figure 10.4.8-2 Steam Generator Blowdown System Piping and Instrumentation Diagram (2/2)

This drawing will be replaced with revised version.

14.2.12.1.83 Steam Generator Blowdown System Preoperational Test

A. Objectives

1. To demonstrate that the SG blowdown system (SGBDS) accepts water from each SG blowdown line, processes the blowdown as required, and delivers the processed water to the condensate system.

2. To demonstrate the capability of the SG blowdown sampling system to collect blowdown liquid sample from each SG and the operation of the SG blowdown sampling system including monitors, system valve and control circuits.

3. To demonstrate of the performance of laboratory equipment.

B. Prerequisites

1. Required construction testing is completed.

2. Component testing and instrument calibration is completed.

3. Test instrumentation is available and calibrated.

4. Required support systems are available.

5. CCW is available for cooling the sample stream and hot functional test is in progress.

6. The SGBDS to be sampled is at normal pressure and temperature.

7. The condenser or [[waste water system (WWS)]] or LWMS is available to receive discharge from the SG blowdown sampling system.

C. Test Method

1. Verify manual and automatic system controls.

2. Verify flowrates and temperatures.

3. Verify indications (flow, temperature and status), and alarms.

4. Verify system isolation using simulated signals.

5. Verify flowpaths.

6. Verify the flow rate and temperature during SG blowdown liquid samples are taken from each SG.

7. Verify the operation of control circuit and operability of the SG blowdown sampling system.