Tennessee Valley Authority
1101 Market Street, LP 3R
Chattanooga, Tennessee 37402-2801

R. M. Krich
Vice President
Nuclear Licensing

February 8, 2011

10 CFR 50.90

ATTN: Document Control Desk
U.S. Nuclear Regulatory Commission
Washington, D.C. 20555-0001

Browns Ferry Nuclear Plant, Units 1, 2, and 3
Facility Operation License Nos. DPR-33, DPR-52, and DPR-68
NRC Docket Nos. 50-259, 50-260, and 50-296

Subject: **Response to NRC Request for Additional Information Regarding Extending Completion Times for Technical Specification 3.8.1 (TAC Nos. ME5036, ME5037, and ME5038)**

References:
1. TVA Letter to NRC, "Revised License Amendment Request TS-468," dated November 12, 2010
2. NRC Letter to TVA, "RAI Regarding Extending Completion Times for Technical Specification 3.8.1 (TAC Nos. ME5036, ME5037, and ME5038)," dated January 19, 2011

The Tennessee Valley Authority (TVA) received the Reference 2, Request for Additional Information (RAI) Regarding Extending the Completion Times for Technical Specification 3.8.1, dated January 19, 2011. The agreed upon date for the TVA response was within 30 days of January 13, 2011, i.e., no later than February 12, 2011.

Enclosure 1 to this letter provides the TVA answers to the NRC for the RAI questions. Enclosure 2 provides a list of revised and new regulatory commitments.

D030
NRR

printed on recycled paper

This letter includes new regulatory commitments consistent with those provided by the licensees for the precedent amendments. Please direct any questions concerning this matter to Tom Matthews at (423) 751-2687.

I declare under penalty of perjury that the foregoing is true and correct.
Executed on the 8th day of February, 2011.

Respectfully,

R. M. Krich

Enclosures:

1. TVA Responses to NRC Request for Additional Information Questions
2. Revised and New Regulatory Commitment List

cc (Enclosures):

NRC Regional Administrator – Region II
NRC Senior Resident Inspector – Browns Ferry Nuclear Plant
Alabama State Department of Public Health

ENCLOSURE 1

Tennessee Valley Authority

Browns Ferry Nuclear Plant
Units 1, 2, and 3

TS-468 - Request for Extension to Completion Time for Technical Specification 3.8.1 Required Action A.3, B.2, and B.5

TVA Responses to NRC Request for Additional Information Questions

Electrical NRC Question 1

In the license amendment request (LAR), the licensee stated that the TDGs will be started and connected to the 4.16 kV Shutdown Board (SDB) associated with the inoperable DG by manually closing the appropriate Bus Tie Board breakers and a 4.16 kV SDB breaker, supplying power to the de-energized SDB.

a. *Provide estimated time it will take to manually start Temporary Diesel Generators (TDGs) and power a SDB, following a loss of all alternating current (AC) power.*

b. *Also provide a summary of the analysis performed for coping with loss of AC power until TDGs are connected to the SDB.*

TVA Response

a. Configuration, procedures and staffing will be such that the TDGs can be started and connected to the assigned 4 kV SDB within an estimated time of 30 minutes.
The current Station Blackout (SBO) coping analysis of record contains the following functions which rely on AC power within the first hour:

- Within eight minutes, ensure at least one Emergency Equipment Cooling Water (EECW) pump is in operation to provide cooling water to running emergency diesel generators (EDGs).
- Start one train of common heating, ventilation, and air conditioning (HVAC) equipment within 1 hour.
- Establish Suppression Pool Cooling within 1 hour.
- Start a second EECW pump within 1 hour.

b. The TDGs will not be available to power the SDB in time to support the EECW function required within 8 minutes. Therefore, procedures will be revised such that the initial EECW pump is supplied by one of the remaining credited EDGs. TDG power will be available in time to support the remaining functions which rely on AC power during a SBO.

This will be NRC Commitment K.

Electrical NRC Question 2

a. *Provide a sketch or drawing showing location of the TDGs, 480V-4160V step-up transformers, Manhole "E", and 4.16 kV Bus Tie Board.*

b. *Provide the routing details of interconnecting cables.* [From TDG to Bus Tie Board, clarified during teleconference with Electrical Branch on 01/13/11]

c. *Provide a single line diagram showing connection of TDGs to the Bus Tie Board.*

d. *Confirm provisions will be made to keep the underground cables dry.*

e. *Confirm that the existing 4.16 kV switchgear (Tie Board) rating will be adequate for two TDGs (each 1.62 MWe) with a combined rating of 3.24 MWe.*

TVA Response

a. This sketch shows the general location of the TDGs, Bus Tie Board, Diesel Fuel Oil Storage Tank, and their associated equipment.

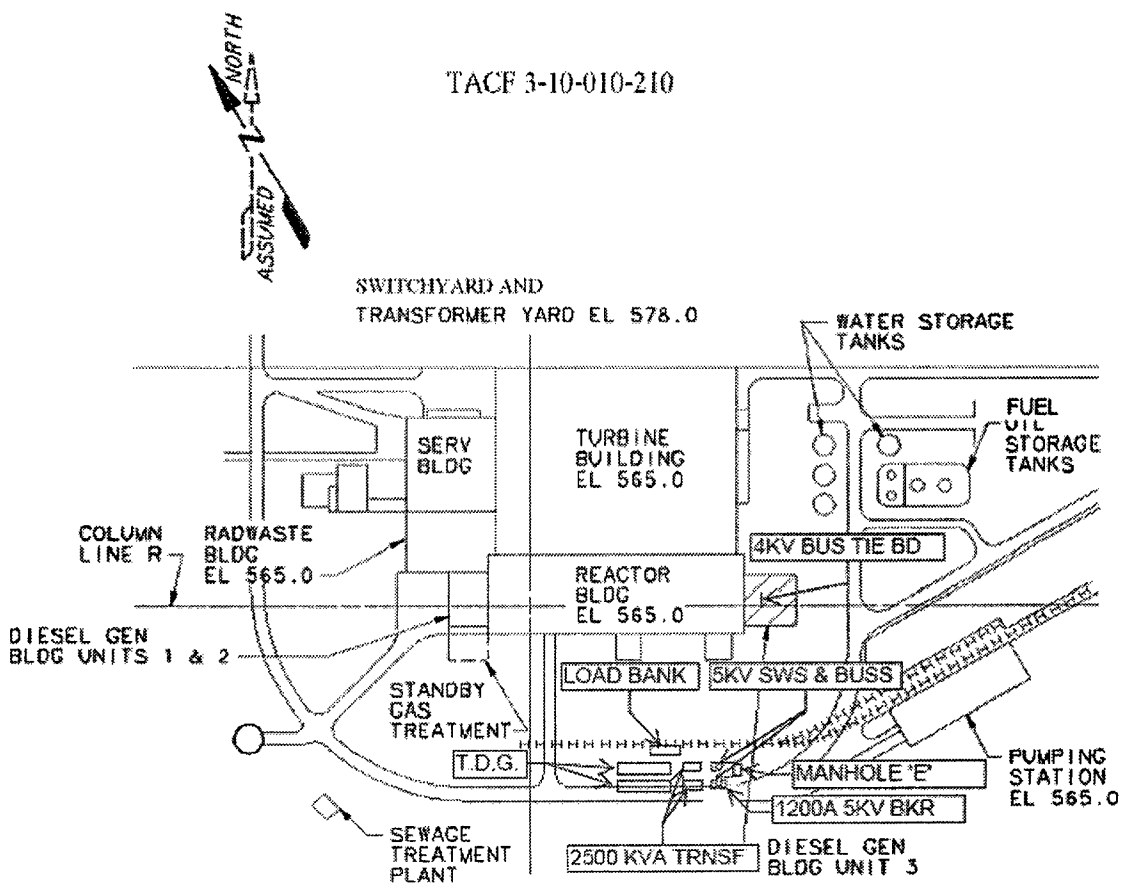

KEY PLAN
NTS

b. The two TDGs will be placed inside the plant's protected yard area, near Manhole "E." The TDG output is 480V AC. The two TDGs connect to the 4 kV Bus Tie Board via above-ground electrical cables, via the 480:4160 step-up transformer; then through Manhole "E" via underground cables. The underground cables are placed on cable trays. These cables terminate at the 4 kV Bus Tie Board, via breaker 1934.

The temporarily routed above-ground cables, from the TDGs to Manhole "E," will be protected from fire hazards and both pedestrian and vehicle traffic with barricades and signs. All cables used will be sized to handle the TDGs' capacity.

c. The sketch below shows the single line diagram of the TDGs, their associated equipment, and the connection to the Bus Tie Board.

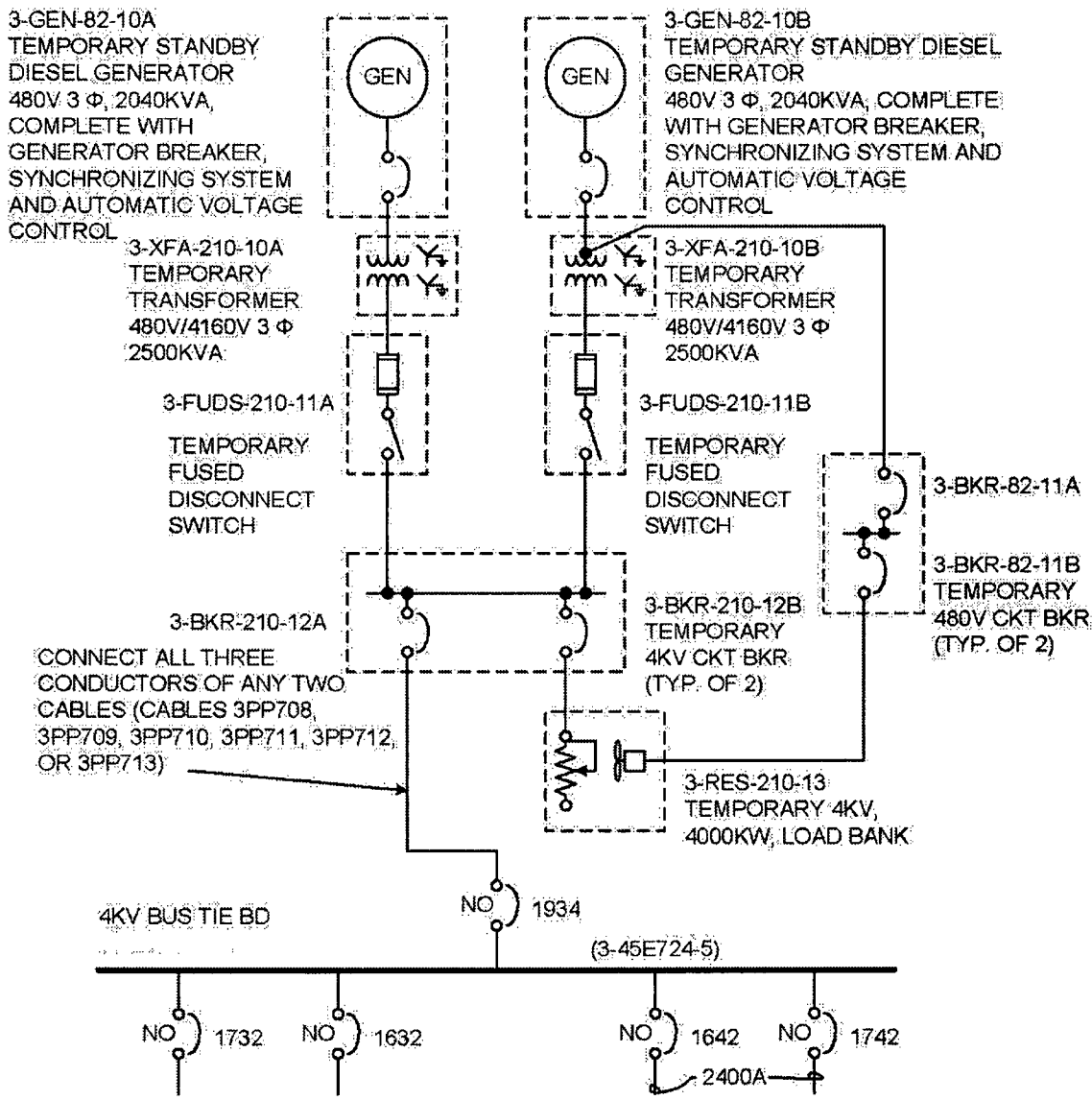

d. The Manhole "E" has a sump pump in it. This sump pump is monitored by the plant's preventative maintenance program, with Work Order 111262677 to ensure the pump is working properly. The Operations Department (i.e., OPS) will include this sump pump monitoring in procedure 0-SR-3.8.1.1, "OPS TDG Implementation," which will incorporate all the OPS TDG support equipment/requirement checks during the 14-day EDG extended Completion Time (CT). This will be NRC Commitment L.

e. The Tie Board rating exceeds the electrical output of the two TDGs (each 1.62 MWe) with a combined rating of 3.24 MWe. The Tie Board rating is 3000 Ampere (A) continuous and is more than adequate for the loading of 600A maximum, interrupting, and short circuit of the TDGs.

Electrical NRC Question 3

On Page E1-18 of the LAR, it is stated that BFN "Engineering Procedure for TDGs Initial Acceptance Testing" will direct a load test of the TDGs initially after acceptance from the TDGs rental vendor and once per 18 months (while the TDGs are in TVA's custody) to ensure the TDGs' ability to accept, accelerate, and run assigned loads.

a. *Provide a summary of the loads which will be assigned to the TDGs for a design basis LOOP condition to bring the plant to a cold shutdown.*

b. *Also, provide brief description of the engineering procedure for the load test.*

c. *Confirm that necessary controls will be provided so that the loads will be shared approximately equal between the two TDGs.*

TVA Response

a. The TDGs are being used to respond to SBO conditions. Achieving a cold shutdown condition during an SBO is not part of the plant's accepted SBO licensing basis since it was not required by the SBO Rule (10 CFR 50.63). Therefore, the loads assigned to the TDGs are those needed to achieve HOT SHUTDOWN conditions.

   The continuous rating of the two TDGs operating in parallel is 3.24 MWe, which is greater than the 2.55 MWe of a single out of service EDG.

   The postulated SBO results in twenty-four possible combinations with three available EDGs (out of a total of eight EDGs at Browns Ferry Nuclear Plant (BFN)). This assumption is consistent with the plant's accepted SBO licensing basis. The resulting three EDGs can power sufficient combinations of equipment to bring both non-SBO units to a safe shutdown during the 4-hour coping period as well as to provide HVAC to the Control Bay (which includes the three Control Rooms) and required Reactor Building electric equipment areas within one hour.

   DC powered equipment is utilized to maintain the blacked out unit during the coping period. Depending on which EDGs are available at the outset of the blackout condition, immediately available boards as well as shutdown boards energized via board power transfers to de-energized boards will feed sufficient complements of required components. Although the required equipment to be energized is identical in every case, the loadings on each EDG (or TDGs) vary due to other equipment that may

become energized due to the number of boards energized to obtain the required equipment.

The worse case loading for any EDG (or TDGs) of the analyzed cases results in the following equipment loads (following load shedding of non-essential loads):

- One Residual Heat Removal (RHR) Pump
- Two 4 kV Shutdown Boards
- One RHR Service Water Pump
- One EECW Pump
- Four 480V Reactor Motor Operated Valves Boards
- Two 480V Diesel Auxiliary Boards
- One 480V Control Bay Ventilation Board

All other required loads for this worse case are carried by the other two lesser loaded EDGs. Thus, the worse case loading that the TDGs can be expected to carry is less than the steady-state continuous rating output of 2.550 MWe for an out of service EDG. Note that the combined capacity for both TDGs is 3.24 MWe.

b. The TDG load test will be incorporated into the Engineering TDG implementation procedure 0-TI-576, and will include the following steps:

- One TDG will be started, then its output breaker will be closed, and energize the electrical cables to the open resistive load bank breaker.
- The second TDG will then be started and synchronized to the first running TDG.
- Once the two TDG are synchronized, the load bank breaker will be closed and resistive electrical load will be raised to 3.24 MWe in step increments, to be applied to both running TDGs that are operating in parallel.
- The TDGs' voltage regulation, excitation, and load sharing systems will be verified to respond as step increases of resistive loads are applied.
- Ensure that the resistive load is shared equally between the two TDGs.

On page E1-18 of the LAR (Reference 1), TVA stated in Commitment A:

> BFN "Engineering Procedure for TDGs Initial Acceptance Testing" will direct a load test of the TDGs initially after acceptance from the TDGs rental vendor and once per 18 months (while the TDGs are in TVA's custody) **to ensure the TDGs' ability to accept, accelerate, and run assigned loads**. The same procedure will direct routine preventative maintenance and a monthly unloaded test run, while the TDGs are onsite, but only during periods when the TDGs are not credited as available during the extended CT.

The resistive load that will be used during TDG load testing cannot mimic the reactive load characteristics of large motors. It is not good practice for BFN to connect safety related motors to the non-safety related TDGs for their load test. In addition, the combined TDGs resistive load test at 3.24 MWe far exceeds the continuous rating of a single EDG at 2.55 MWe. Thus, TVA now revises Commitment A to state:

> BFN "Engineering Procedure for TDGs Initial Acceptance Testing" will direct a load test of the TDGs initially after acceptance from the TDGs rental vendor and once per

18 months (while the TDGs are in TVA's custody) **which loads the pair of TDGs to 3.24 MWe using a resistive load bank**. The same procedure will direct routine preventative maintenance and a monthly unloaded test run, while the TDGs are on site, but only during periods when the TDGs are not credited as available during the extended CT.

c. Per the TDG load test, both TDGs will be in parallel prior to increasing the applied resistive load. The acceptance criterion ensures that the resistive load is shared equally between the two TDGs.

Electrical NRC Question 4

Provide brief description of modifications that will be made to the onsite fuel oil storage tanks (FOSTs) for an independently powered transfer pump to refuel the TDGs. Which power source will feed the independently powered transfer pump(s)?

TVA Response

Diesel fuel oil for refueling each TDG will be transferred via hoses connecting the FOSTs to the TDG 1000-gallon day tanks on the TDG Skid.

The fuel hoses will be kept at the FOST area, and will be monitored by the Assistant Unit Operator each shift while the TDGs are being credited for the 14-day CT.

The two BFN FOSTs are located approximately 700 feet away from the TDGs and are at a higher elevation than the TDGs. The height differential provides a positive suction head for the diesel fuel oil to the TDG's internal fuel transfer pump. (Please review the location of the FOSTs in the sketch provided for Electrical NRC Question 2.a.)

Quick disconnects on the available 1-1/2" lines from both BFN FOSTs will be available to connect a fuel transfer hose from a FOST to a TDG internally mounted diesel fuel oil transfer pump to refill the TDG internal fuel tank.

Each TDG has an internally mounted TDG diesel fuel transfer pump, rated at 44 gpm, powered by the TDG 480V output power while the TDG is running. The pump can also be powered by an external power source, if desired. The TDG tank level determines when the pump starts and stops.

A second way to refuel the TDGs is via tankers that are routinely used to refuel the FOSTs.

Electrical NRC Question 5

Consider adding the following commitments to Enclosure 4 of the LAR, or provide a basis why these commitments are not needed:

a. *No discretionary switchyard maintenance will be allowed during the extended DG maintenance period.*

b. *High Pressure Coolant Injection (HPCI) pump, Reactor Core Isolation Cooling (RCIC) pump, and the Residual Heat Removal (RHR) pump associated with the operable DG will not be removed from service for elective maintenance activities during the planned*

extended DG inoperability.

TVA Response

TVA agrees to add these two items as NRC Commitments G and H; see Enclosure 2.

NRC Supplemental Question 1

In the license amendment request (LAR), the licensee proposes that TS 3.8.1, Required Action B.2, read as follows: "Evaluate availability of both temporary diesel generators (TDGs)." While it is noted that the proposed TS Bases, B 3.8.1, ACTIONS B.2 provides the reason "evaluate" is used in the TS Required Action B.2, verification of the availability of the TDGs is not required to be performed to enter or remain in the Condition (B) for up to the proposed 14-days. However, elsewhere in the LAR it is stated that the TDGs will be "verified available."

a. *Regarding the TDG availability requirements described in the proposed TS 3.8.1 Bases, B.2 and any other differences, please explain the difference between "evaluation of TDG availability" and "verification of TDG availability."*

TVA Response

Proposed TS 3.8.1 Required Action B.2 states "Evaluate the availability of both temporary TDGs" within "1 hour AND once per 12 hours thereafter." The wording and presentation of the proposed Required Actions were selected based on operator input and human factors considerations, while addressing the need for multiple Completion Times (based on TDG availability) and maintaining consistency with the structure and format of the TSs.

The proposed Required Action B.5 Completion Times for restoring the EDG have been specified based on TDG availability, e.g., 7 days from discovery of unavailability of TDG(s), 72 hours from discovery of Condition B entry ≥4 days concurrent with unavailability of TDG(s), and 14 days (which assumes the TDGs are available for the entire 14-day period).

With the proposed Required Action B.2 wording, in the event of failure to verify the availability of both TDGs during the evaluation required, Required Action B.2 would still be met.

However, on discovery of the unavailability of one or both TDGs, the resulting 7-day or 72-hour Completion Time specified in proposed Required Action B.5 becomes applicable. This clarification is also provided in the proposed Bases for Required Action B.2.

If the wording of Required Action B.2 had been proposed as "Verify the availability of both TDGs," the discovery of the unavailability of one or both TDGs would have resulted in failure to meet Required Action B.2 and its associated Completion Time. Based on the structure and format of the TSs, the discovery of this condition would have required the "Required Action and associated Completion Time not met" Condition to also be entered.

Thus, use of the term "evaluate availability" provides assurance that Required Action B.2 can be successfully completed, regardless of the status of the TDGs. The resulting verification that the TDGs are either available or unavailable determines the applicable Completion Time in Required Action B.5.

NRC Supplemental Question 2

Proposed TS Bases B.2 states that, "In order to extend the Required Action B.5 Completion Time for an inoperable DG from 7 days to 14 days inoperable, it is necessary to verify the availability of the TDGs on a more frequent basis."

a. *The Completion Time for proposed TS 3.8.1, Required Action B.2, "Evaluate the availability of both temporary diesel generators (TDGs)," is "1 hour AND Once per 12 hours thereafter."*

   Where can the stated requirement to perform
   (1) a verification and,
   (2) a verification on a more frequent basis, be found?

TVA Response

TS 3.8.1, Required Action B.2 is intended to ensure the availability of the TDGs upon entry into TS 3.8.1 and every 12 hours thereafter to support the extended 14-day completion time.

TS Bases B.2 is being revised to clarify the frequency requirements for the verification of TDG availability. The revised wording is underlined below:

> In order to extend the Required Action B.5 Completion Time for an inoperable DG from 7 days to14 days inoperable, it is necessary to verify the availability of the TDGs within 1 hour on entry into TS 3.8.1 and every 12 hours thereafter. Since Required Action B.2 only specifies "evaluate," discovering one or both TDGs unavailable does not result in the Required Action being not met (i.e., the evaluation is performed). However, on discovery of an unavailable TDG, the Completion Time for Required Action B.5 starts the 7-day and/or 72-hour clock.
>
> The TS Basis 3.8.1.B.2 revision above is NRC Commitment I.

The requirements for verifying the availability of the TDGs are provided in TS 3.8.1 Bases B.2 Actions.

As part of the implementation of the approved license amendment, TVA will approve and issue Engineering Procedure 0-TI-576 and Operations Procedure 0-SR-3.8.1.1. These procedures will implement all TDG-related commitments and availability requirements, including the periodic verifications of availability.

Fire Protection NRC Question 1

Due to known impairments in the fire protection safe shutdown capability that will continue until the transition to NFPA 805 is complete, ***Provide*** *a technical evaluation that the facility can achieve and maintain safe shutdown in the event of a fire when a [EDG OOS] diesel is impaired for the extended outage, or* ***Provide*** *a justification why such an evaluation is not required.* ***Include*** *in this evaluation a discussion of the current impairments and associated compensatory measures in response to the YELLOW violation (ADAMS Nos. ML100201056, 1/20/10 and ML1010905030, 4/19/10).*

TVA Response

The following provides the justification "Why an evaluation that the facility can achieve and maintain safe shutdown in the event of a fire when an EDG is impaired for the extended CT is not required."

In developing this LAR, TVA followed the unpublished NRC guidance recommended by the NRC representatives that participated in a meeting between TVA and the NRC on June 29, 2010. This NRC recommendation is documented in the NRC meeting summary dated November 10, 2010.

As provided by the NRC, this guidance specifies that the design basis for the TDG being credited for the increased EDG TS CT of 14 days is Station Blackout (SBO) conditions. An Appendix R fire was not identified as part of the TDG design basis by the NRC. Therefore, in accordance with the NRC guidance, this LAR did not address safe shutdown in the event of an Appendix R fire during the additional seven-day TS CT for an inoperable EDG.

Furthermore, the NRC conducted a supplemental inspection, completed on October 22, 2010 (Inspection Report 05000259/2010008, 05000260/2010008, and 05000296/2010008, dated December 3, 2010), because of two fire protection compliance findings, one of Yellow safety significance and one of White safety significance.

As stated in the inspection report, ". . . The inspection consisted of examination of activities conducted under your license as they related to safety, compliance with the Commission's rules and regulations, and the conditions of your operating license . . ." No findings were identified as a result of this inspection and the inspection report stated that ". . . both the Yellow finding associated with Appendix R, Section III.G and the White finding associated with Technical Specification 5.4.1 are closed . . ."

Additionally, the currently approved fire protection licensing basis recognizes that additional risk beyond the TS specified CT can be offset by implementing compensatory measures related to fire prevention and detection. Therefore, the proposed extended 14-day EDG CT will be supported by implementing enhanced compensatory measures during the time of the extended CT.

The following is a list of the proposed additional compensatory measures related to the operable EDGs and TDGs for the affected unit(s) during the 14-day EDG extended CT period:

- Additional restrictions will be imposed on hot work in the affected fire zone/area,
- Shift walk downs by Fire Operations personnel to verify required controls of transient combustibles in affected fire zones/areas that could impact the operable EDGs, the TDGs availability, offsite power availability, or the ability to use the Bus Tie Board prior to entering the extended CT,
- Prohibiting elective work on fire hose stations and suppression and detection systems in the affected fire zone/area, and
- Limits will be placed on elective work performed on Appendix R components.

The additional Appendix R compensatory measures list is NRC Commitment J.

Fire Protection NRC Question 2

As stated above, the licensee did not provide in the application an analysis to demonstrate safe shutdown capability should a fire occur during an extended diesel outage. The statement that hourly fire-watch tours prevent fires that could impact safe shutdown is not sufficient as an acceptable basis for extending diesel outage time. For the reasons stated above, please

Provide details of how post fire safe shutdown will be accomplished during the extended diesel generator outages, or Provide a justification why such an evaluation is not necessary.

TVA Response

A justification of why an evaluation of how fire safe shutdown will be accomplished during the extended EDG outages is not necessary, has been provided in the response to Fire Protection NRC Question 1 above.

The TDGs will not be used for any post-fire safe shutdown purpose.

During the proposed extended EDG CT, additional compensatory measures to minimize the potential for an Appendix R fire are proposed as specified in the response to Fire Protection NRC Question 1 above.

Fire Protection NRC Question 3

No analysis to use the TDGs for any post fire safe shutdown purpose was provided in the submittal.

If TDGs are to be used for a safe shutdown function in the event of a fire, ***include*** *justification for the additional operator manual actions, circuit analysis including associated circuit effects resulting from a plant fire, and an analysis showing that the electrical busses powered by the TDGs would be unaffected by the fire.*

Provide a technical evaluation of how the TDGs will be used to support post fire safe shutdown. The evaluation should include a discussion of procedural changes, staffing, and thermo-hydraulic timeline that supports the use of the TDGs. If the TDGs are not used for post fire safe shutdown, Provide a technical evaluation of how the plant would shutdown in the event that a fire were to occur that would challenge safe shutdown capability, specifically, a fire that would rely on an out of service EDG.

TVA Response

The TDGs will not be used for post fire safe shutdown. With respect to the technical evaluation of how the plant would shutdown in the event that an Appendix R fire was to occur that would challenge safe shutdown, specifically, a fire that would rely on an out of service EDG, see the response to Fire Protection NRC Question 1 above.

Fire Protection NRC Question 4

The submittal does not provide information concerning plant post fire safe shutdown methods with an impaired diesel generator, but states, "An hourly fire watch in these areas would provide sufficient assurance that a fire would not occur or would be detected and mitigated before it progresses to an Appendix R fire event. As a result, spurious operations of critical equipment and serious plant degradation will be prevented."

Provide the basis for this statement, and demonstrate why this statement and its conclusion are true. Include in the discussion a description of how an hourly fire watch tour is effective in detecting high energy arcing faults (instantaneous) and detecting and preventing self-ignited cable fires, both are major contributors to the fire risk at BFN.

TVA Response

We withdraw from the LAR the statement, *"An hourly fire watch in these areas would provide sufficient assurance that a fire would not occur or would be detected and mitigated before it progresses to an Appendix R fire event."*

The response to Fire Protection NRC Question 1 above addresses the need to detect high energy arcing faults and self-ignited cable fires.

Fire Protection NRC Question 5

The licensee's submittal does not discuss any temporary changes to the Safe Shutdown Instructions (SSIs) needed to accomplish safe shutdown including additional operator manual actions assuming TDG operation is required.

Provide a discussion of how the operators would be informed and trained to shutdown the plant in the event of an SSI that is needed relies on an out of service EDG.

TVA Response

Based on the response to Fire Protection NRC Question 1 above, no changes to the SSIs are needed. Accordingly, there is no need to discuss how operators would be informed and trained to shutdown the plant in the event of an SSI that is needed which relies on an out of service EDG.

Fire Protection NRC Question 6

In 10 CFR 50.48.a, licensees are required to have a fire protection program that satisfies GDC 3. Normally this is demonstrated, as specified in our guidance, by complying with NRC guidance and NFPA code requirements. The licensee's analysis did not specify location of the TDGs with their fuel oil tanks or the location of the oil filled transformer.

Provide a technical analysis to specify what fire protection features will be provided to comply with NRC guidance and NFPA code fire protection requirements for the additional hazard. The evaluation should also consider the impact of smoke, either fire or exhaust smoke from the TDGs, on normal or emergency plant operations. This would include control room and other plant air intakes.

TVA Response

Location of the TDGs:

Please review the location of the TDGs in the sketch provided in the response to NRC Electrical Question 2.a.

The yard and exterior areas are not designated as fire areas for BFN. They are unbounded areas open to the atmosphere and adjacent to the plant buildings, and may be separated by non-rated exterior walls/barriers. Equipment in the yard and exterior areas includes nitrogen tanks, the condensate storage system, transformers and switchgear, hydrogen storage, fuel oil tanks, chillers, several trailers, and small buildings (e.g., pipe storage shed).

The TDGs and transformers are to be located in the yard area next to Manhole "E" that contains the feeder cables from the transformers to the 4 kV Bus Tie Board in the Unit 3, Bus Tie Board Room, Fire Area 24. They will be approximately 75 feet from non-safety structures (Auxiliary Decay Heat Removal (ADHR) Cooling Towers and temporary trailers) and over 150 feet away from any safety related structure (Reactor Building and Intake Structure).

Each of the two TDGs has an internal fuel oil storage tank capacity of 1,000 gallons of diesel fuel oil and an associated transformer that contains 700 gallons of oil. Each TDG and transformer will be surrounded by temporary inflated containment barriers which can contain the entire contents of the specific TDG fuel and transformer oil.

The TDGs' internal fuel tanks and the associated electrical control panels on the generators are Underwriters Laboratories (UL) listed. The fuel tanks meet the UL 142 Standard for "Steel Aboveground Tanks for Flammable and Combustible Liquids," and are intended for installation in accordance with the Flammable and Combustible Liquids Code NFPA 30; the Standard for Installation of Oil Burning Equipment, NFPA 31; and the Automotive and Marine Service Station Code, NFPA 30A.

Based on the quantity of oil and postulated spill, the transformers and TDGs are adequately separated from adjacent structures, thus limiting the damage and potential spread of fire from a transformer or a TDG tank failure.

A fire truck and the BFN fire department are onsite to respond to any fire associated with the TDGs and transformers. The nearest fire hydrant is located approximately 60 feet from the TDGs and transformers.

Ventilation Issue:

The TDGs and transformers are to be located in the yard area at the 565 feet elevation on the south part of the yard area, and over 150 feet from the Reactor Building which is the closest safety-related structure.

The Updated Final Safety Analysis Report (UFSAR), Section 10.12.5, describes the ventilation systems for the Reactor Control Building, Turbine Building, and EDG Buildings. For the Turbine Building, outside air is supplied at the air intakes at elevation 638 feet and enters the building through the fan room roof hoods on the Turbine Building roof.

For the Control Building, outside air for the normal ventilation system and Control Room Emergency Ventilation System (CREVS) is drawn from both the main outside air intake ducts at elevation 635 feet supplying the ventilation towers.

For the EDG Buildings, the Units 1 and 2 EDG Building is located on the west side of the Unit 1 Reactor and Unit 3 EDG Building is located at east side of the Unit 3 Reactor, and each has separate ventilation systems located on the top of the buildings.

For the Reactor Building, the outside air for normal ventilation is taken from grade level on the south side of the Reactor Building.

Based on the physical separation of the TDGs and transformers from the air intakes for the safety-related structures, there will be no impact from any normal operation of the TDGs. There will be no adverse impact from smoke, either fire or exhaust smoke from the TDGs, on normal or emergency plant operations including control room and other plant air intakes.

Furthermore, Alternate Decay Heat Removal (ADHR) TDGs have operated in the same general area during numerous refueling outages without any ventilation-related complaint. Empirical data show that the Reactor Building and Refuel Floor ventilation and Reactor Building habitability have not been adversely impacted by ADHR TDGs exhaust smoke in the past. The effect of smoke from a hypothetical fire should be similar, i.e., not adverse.

Fire Protection NRC Question 7

Although no fire probabilistic risk assessment has yet been completed for BFN, the Significance Determination Process identified some locations in the plant and yard area that may have higher risk than other locations.

Provide a technical justification that these higher risk areas (pinch points) were factored into the location of the TDGs, fuel tanks, and transformer to prevent putting the additional hazard in the higher fire risk locations?

TVA Response

A review of the Significance Determination Process did not identify any high risk areas in the plant yard near the location in which the TDGs will be located. Since the planned location of the TDGs and transformers are over 150 feet from any safety related structures and over 500 feet from the plant's high-voltage switchyard (offsite power supplies), there are no identified hazards of high risk in proximity of the TDGs and transformers.

As noted in the response to Fire Protection NRC Question 6, the yard and exterior areas are not designated as fire areas for BFN. They are unbounded areas, open to the atmosphere, adjacent to the plant buildings, and may be separated by non-rated exterior walls/barriers. Equipment in the yard and exterior areas includes nitrogen tanks, the condensate storage system, transformers and switchgear, hydrogen storage, fuel oil tanks, chillers, several trailers, and small buildings (i.e., pipe storage shed).

The TDGs and transformers are to be located in the yard area and are located next to Manhole "E" that contains the feeder cables from the transformers to the 4 kV Bus Tie Board in the Unit 3, Bus Tie Board Room, Fire Area 24. The TDGs are approximately 75 feet from non-safety structure (ADHR Cooling Towers and temporary trailers) and over 150 feet from any safety-related structure (Reactor Building, EDG Building, and Service Water Intake Structure).

ENCLOSURE 2

Tennessee Valley Authority

Browns Ferry Nuclear Plant
Units 1, 2, and 3

TS-468 - Request for Extension to Completion Time for Technical Specification 3.8.1 Required Action A.3, B.2, and B.5

Revised and New Regulatory Commitment List
Commitment A (Revised) and Commitments G through L (New)

A. Browns Ferry Nuclear Plant (BFN) "Engineering Procedure for TDGs Initial Acceptance Testing" will direct a load test of the TDGs initially after acceptance from the TDGs rental vendor and once per 18 months (while the TDGs are in TVA's custody) which loads the pair of TDGs to 3.24 MWe using a resistive load bank. The same procedure will direct routine preventative maintenance and a monthly unloaded test run, while the TDGs are onsite, but only during periods when the TDGs are not credited as available during the extended completion time (CT). If the TDGs are needed again after being out of TVA control onsite, TVA will re-perform the acceptance testing prior to entering the next planned EDG inoperability that exceeds 7 days.

B. The TDGs will be protected, as a defense-in-depth, during the extended CT, and will be routinely monitored when they are not required to be available for the extended EDG CT.

C. Required actions during a CT greater than 7 days will be to verify the TDGs fuel tanks are at least 90 percent full and to keep one FOST at least 60 percent full.

D. Licensed Operators and Assistant Unit Operators will be appropriately trained on the purpose and use of the TDGs. A briefing/discussion of the revised TS 3.8.1 and putting TDGs in service will be completed prior to a planned EDG inoperability that exceeds 7 days. Operating crews will be briefed on the EDG work plan and procedural actions regarding LOOP and SBO.

E. Operators will monitor weather forecasts each shift. Weather conditions will be evaluated prior to intentionally entering the extended EDG outage and will not be entered if official weather forecasts are predicting severe conditions (tornado or thunderstorm warnings). If severe weather or grid instability is expected after a EDG outage begins, station managers will assess the conditions and determine the best course for returning the EDG to an operable status.

F. The Transmission Operator system dispatcher will be contacted once per day and BFN will inform the dispatcher of the EDG status along with BFN offsite power needs. Prior to entering a planned EDG inoperability that exceeds 7 days, BFN Operating Crew will hold discussions with the system load dispatcher to ensure no significant grid perturbations are expected during the planned EDG inoperability that exceeds 7 days, and request that the system load dispatcher inform BFN if offsite power conditions change during a

planned EDG inoperability that exceeds 7 days such that significant grid perturbations do occur or become expected.

G. No discretionary switchyard maintenance will be allowed during the extended EDG maintenance period.

H. High Pressure Coolant Injection pump, Reactor Core Isolation Cooling pump, and the Residual Heat Removal pump associated with the operable EDG will not be removed from service for elective maintenance activities during the planned extended EDG inoperability.

I. TS Basis 3.8.1 B.2 is being revised to clarify the frequency requirements for the verification TDG availability. The revised wording is below:

> "In order to extend the Required Action B.5 Completion Time for an inoperable EDG from 7 days to14 days inoperable, it is necessary to verify the availability of the TDGs within 1 hour on entry into TS 3.8.1 LCO and every 12 hours thereafter."

J. Additional Appendix R compensatory measures for the operable EDGs and TDGs during the 14-day LCO period:

1. Additional restrictions will be imposed on hot work in the affected fire zone/area,
2. Shift walk downs by Fire Operations personnel to verify required controls of transient combustibles in affected fire zones/areas that could impact the operable EDGs, the TDGs availability, offsite power availability, or the ability to use the Bus Tie Board prior to entering the extended CT,
3. Prohibiting elective work on fire hose stations and suppression and detection systems in the affected fire zone/area, and
4. Limits will be placed on elective work performed on Appendix R components.

K. Revise appropriate procedures such that the initial EECW pump is supplied by one of the remaining credited EDGs. The TDG will be available in time to support the remaining functions which rely on AC power during a SBO.

L. Procedure 0-SR-3.8.1.1 (OPS TDG Implementation) will include Manhole "E" sump pump monitoring.