Westinghouse

Westinghouse Electric Company
Nuclear Power Plants
1000 Westinghouse Drive
Cranberry Township, Pennsylvania 16066
USA

Document Control Desk
U S Nuclear Regulatory Commission
Two White Flint North
11555 Rockville Pike
Rockville, MD 20852-2738

Direct tel: 412-374-2035
Direct fax: 724-940-8505
e-mail: ziesinrf@westinghouse.com

Your ref: Docket No. 52-006
Our ref: DCP_NRC_003124

February 9, 2011

Subject: AP1000 Response to Request for Additional Information (SRP 3)

Westinghouse is submitting a response to the NRC request for additional information (RAI) on SRP Section 3. This RAI response is submitted in support of the AP1000 Design Certification Amendment Application (Docket No. 52-006). The information included in this response is generic and is expected to apply to all COL applications referencing the AP1000 Design Certification and the AP1000 Design Certification Amendment Application.

Enclosure 1 provides the response for the following RAI(s):

RAI-SRP3.6.1-SBPA-01 R1

Questions or requests for additional information related to the content and preparation of this response should be directed to Westinghouse. Please send copies of such questions or requests to the prospective applicants for combined licenses referencing the AP1000 Design Certification. A representative for each applicant is included on the cc: list of this letter.

Very truly yours,

S. E. Rutterbusch for

R. F. Ziesing
Director, U.S. Licensing

/Enclosure

1. Response to Request for Additional Information on SRP Section 3

D063
NRO

cc:	D. Jaffe	-	U.S. NRC	1E
	E. McKenna	-	U.S. NRC	1E
	P. Clark	-	U.S. NRC	1E
	T. Spink	-	TVA	1E
	P. Hastings	-	Duke Energy	1E
	R. Kitchen	-	Progress Energy	1E
	A. Monroe	-	SCANA	1E
	P. Jacobs	-	Florida Power & Light	1E
	C. Pierce	-	Southern Company	1E
	E. Schmiech	-	Westinghouse	1E
	G. Zinke	-	NuStart/Entergy	1E
	R. Grumbir	-	NuStart	1E
	D. Lindgren	-	Westinghouse	1E

ENCLOSURE 1

Response to Request for Additional Information on SRP Section 3

AP1000 TECHNICAL REPORT REVIEW

Response to Request For Additional Information (RAI)

RAI Response Number: RAI-SRP3.6.1-SBPA-01
Revision: 1~~0~~

Question:

In DCD Section 3.6.1.1, "Design Basis," Paragraph J, the following secondary, non safety related components are listed as those to be used to mitigate postulated line ruptures:

- turbine control and stop valves,
- turbine interceptor and reheat stop valves, and
- turbine bypass (steam dump) valves.

In DCD Section 3.6.1.3.3 (second to last paragraph), page 3.6-11, the following secondary, non safety related components are listed as those to be used to mitigate postulated line ruptures:

- turbine stop valves,
- moisture separator reheater stop valves, and
- turbine bypass valves.

Provide clarification as to what secondary, non safety related components are to be used to mitigate postulated line ruptures.

Westinghouse Response:

Westinghouse acknowledges the inconsistency in nonsafety-related valve identification within DCD Section 3.6. Extent of condition review also observed this inconsistency within DCD Section 10.3.

The nonsafety-related valves used to mitigate postulated line ruptures, given the failure of no more than one Main Steam Isolation Valve (MSIV) are:

- Turbine Control and Stop Valves
- Turbine Bypass Valves
- Moisture Separator Reheat Supply Steam Control Valves

These valves are identified in the AP1000 Technical Specification Bases (DCD Section 16.1, B 3.7.2), "The non-safety related turbine stop or control valves, in combination with the turbine bypass, and moisture separator reheat supply steam control valves, are assumed as a backup to isolate the steam flow path given a single failure of an MSIV."

Westinghouse Additional Response:

NUREG-0138 requires the designation of MSIV backup isolation valves. As explained below, Westinghouse changed the valves selected for this purpose. This RAI revision documents this revision of MSIV backup isolation valves in the DCD. As this change was made in DCD Revision 17, notes are added as necessary to the DCD markup for clarification.

The AP1000 design was revised to use the Toshiba Turbine-Generator. One of the associated changes was a reconfiguration of the second stage reheat steam supply (SSRSS) valves off of the main steam header. This included the use of two parallel valves in each SSRSS line; one MOV and one AOV (V016A/B and V017A/B). These four valves were credited in the safety analysis as MSIV backup isolation valves. It was then found that MOVs of this size cannot meet the analyzed 5 second closure time requirement.

To remedy this situation without affecting Toshiba's standard MSR reheat steam control methods, the two MSR reheat steam isolation valves (V015A/B) upstream of the four SSRSS valves were designated as the MSIV backup isolation valves (See DCD Figure 10.3.2-2). To achieve the 5 second closure time, these two isolation valves were changed from motor operated gate valves to air operated globe valves. Valves V016A/B and V017A/B continue in their original purpose.

This choice of isolation valves was beneficial to the safety analysis because of the smaller volume between the MSIV and the MSIV backup isolation valves, and the reduced number of valves required to function for MSIV backup isolation. Also, it uses valves already designed as isolation valves rather than control valves.

The additional DCD text changes are shown below.

Summary of DCD Changes:

1. Tier 1 Table 2.2.4-3
2. Tier 1 Figure 2.2.4-1 s3/3

3. Section 3.6.1.1
4. Section 3.6.1.3.3
5. Table 3.9-16 and notes
6. Section 10.3.1.1
7. Section 10.3.4.2
8. Table 10.3.2-4
9. Figure 10.3.2-2
10. Section 14.2.9.2.1
11. Table 15.0-8 note
12. Ch 16 Technical Specifications and Bases 3.7.2

Design Control Document (DCD) Revision:

~~Revise AP1000 DCD, Revision 16, Subsections 3.6.1.1, 3.6.1.3.3, and 10.3.1.1as follows:~~

1. Revise AP1000 DCD, Revision 16, Tier 1 Table 2.2.4-3 as follows:

Table 2.2.4-3		
Equipment Name	**Tag No.**	**Control Function**
Turbine Bypass Control Valve	MSS-PL-V005	Close
Turbine Bypass Control Valve	MSS-PL-V006	Close
Moisture Separator Reheater 2nd Stage Steam Isolation Valve	MSS-PL-V015A	Close
Moisture Separator Reheater 2nd Stage Steam Isolation Valve	MSS-PL-V015B	Close
~~Moisture Separator Stage 1 Reheat Supply Steam Control Valve~~	~~MSS-PL-V016A~~	~~Close~~
~~Moisture Separator Stage 1 Reheat Supply Steam Control Valve~~	~~MSS-PL-V016B~~	~~Close~~
~~Moisture Separator Stage 2 Reheat Supply Steam Control Valve~~	~~MSS-PL-V017A~~	~~Close~~
~~Moisture Separator Stage 2 Reheat Supply Steam Control Valve~~	~~MSS-PL-V017B~~	~~Close~~
Main to Startup Feedwater Crossover Valve	FWS-PL-097	Close

2. Revise DCD Revision 16, Tier 1 Figure 2.2.4-1 (Sheet 3 of 3), "Steam Generator System" as follows:

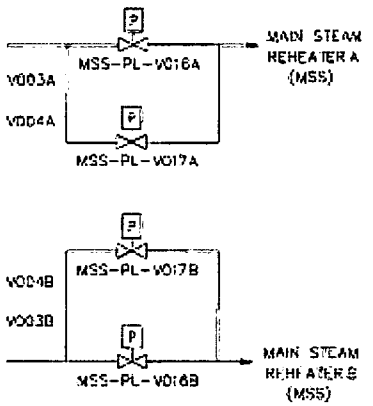

Old detail:

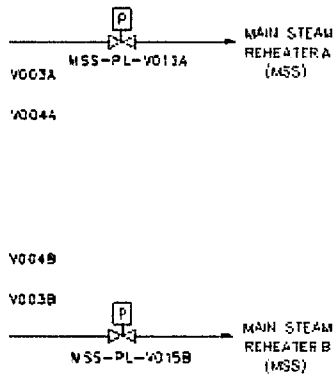

New detail:

3. Revise DCD Revision 16, Section 3.6.1.1, "Design Basis" Part J, as follows:

3.6.1.1 Design Basis

(A to I unchanged)

——Design Basis Safety-related systems and components are used to mitigate the effects of postulated pipe ruptures. In addition, the turbine control and stop, ~~turbine interceptor and reheat stop~~ moisture separator reheater 2nd stage steam isolation, and turbine bypass (steam dump) valves (which are not safety-related) are credited in single failure analyses to mitigate postulated steam line ruptures.

4. Revise DCD Revision 16, Section 3.6.1.3.3, "Specific Protection Considerations" as follows:

3.6.1.3.3 Specific Protection Considerations

(one paragraph unchanged)

For those cases in which the rupture of the main steam or feedwater piping inside containment is the postulated initiating event the turbine control, turbine stop, moisture separator reheater 2nd stage steam isolation ~~moisture separator reheater stop~~, and turbine bypass valves, and to a limited extent, the control systems for the turbine stop and feedwater control valves (which are nonsafety-related equipment) are credited in single failure analysis to mitigate the event. This equipment is not protected from pipe ruptures in the turbine building because the postulated pipe rupture for which it provides protection is inside containment. The assumed single active failure for this analysis is the function of the safety-related valve that would normally isolate the piping. This isolation function is addressed in more detail in Chapter 10.

5. Revise DCD Revision 16, Table 3.9-16 and notes, "Valve Inservice Test Requirements" as follows:

Table 3.9-16

VALVE INSERVICE TEST REQUIREMENTS

Valve Tag Number	Description[1]	Valve Type	Safety-Related Missions	Safety Functions[2]	ASME IST Category	Inservice Testing Type and Frequency	IST Notes
MSS-PL-V015A	Moisture Separator Reheater 2nd Stage Steam Isolation Valve	Remote AO GLOBE	Maintain Close Transfer Close	Active-to-Failed Remote Position	B	Remote Position Indication, Exercise/2 Years Exercise Part Stroke/Operation Exercise Full Stroke/Cold Shutdown Failsafe Test/Cold Shutdown * Operability Test	25, 31, 34
MSS-PL-V015B	Moisture Separator Reheater 2nd Stage Steam Isolation Valve	Remote AO GLOBE	Maintain Close Transfer Close	Active-to-Failed Remote Position	B	Remote Position Indication, Exercise/2 Years Exercise Part Stroke/Operation Exercise Full Stroke/Cold Shutdown Failsafe Test/Cold Shutdown * Operability Test	25, 31, 34
~~MSS-PL-V016A~~	~~Moisture Separator Reheater Steam Supply Control Valve~~	~~Remote~~	~~Maintain Close Transfer Close~~	~~Active-to-Failed Remote Position~~	~~B~~	~~Remote Position Indication, Exercise/2 Years~~ ~~Exercise Part Stroke/Operation~~ ~~Exercise Full Stroke/Cold Shutdown~~ ~~Operability Test~~	~~25, 31, 34~~
~~MSS-PL-V017A~~	~~Moisture Separator Reheater Steam Supply Bypass Control Valve~~	~~Remote~~	~~Maintain Close Transfer Close~~	~~Active-to-Failed Remote Position~~	~~B~~	~~Remote Position Indication, Exercise/2 Years~~ ~~Exercise Part Stroke/Operation~~ ~~Exercise Full Stroke/Cold Shutdown~~ ~~Operability Test~~	~~25, 31, 34~~

~~MSS~~	~~PL-V016B~~	~~Moisture Separator Reheater Steam Supply Control Valve~~	~~Remote~~	~~Maintain Close Transfer Close~~	~~Active-to-Failed Remote Position~~	~~B~~	~~Remote Position Indication, Exercise/2 Years Exercise Part Stroke/Operation Exercise Full Stroke/Cold Shutdown Operability Test~~	~~25, 31, 34~~
~~MSS~~	~~PL-V017B~~	~~Moisture Separator Reheater Steam Supply Bypass Control Valve~~	~~Remote~~	~~Maintain Close Transfer Close~~	~~Active-to-Failed Remote Position~~	~~B~~	~~Remote Position Indication, Exercise/2 Years Exercise Part Stroke/Operation Exercise Full Stroke/Cold Shutdown Operability Test~~	~~25, 31, 34~~

* "Failsafe Test/Cold Shutdown *"Added in R18

Notes

25. This note applies to the main feedwater control valves (SGS-V250A/B), moisture separator reheater 2nd stage steam isolation valve (MSS-V015A/B)~~moisture separator reheater steam control valve (MSS-V016A/B)~~, turbine control valves (MTS-V002A/B, V004A/B). The valves are not quarterly stroke tested since full stroke testing would result in a plant transient during power operation. Normal feedwater and turbine control operation provides a partial stroke confirmation of valve operability. The valves will be full stroke tested during cold shutdowns.

34. This note applies to the moisture separator reheater 2nd stage steam isolation valve (MSS-V015A/B)~~moisture separator reheater steam control valve (MSS-V016A/B)~~, turbine control valves (MTS-V002A/B, V004A/B), main turbine stop valves (MTS-V001A/B, V003A/B), the turbine bypass control valves (MSS-V001, V002, V003, V004, V005, V006). These valves are not safety-related. These valves are relied on in the safety analyses for those cases in which the rupture of the main steam or feedwater piping inside containment is the postulated initiating event. These valves are credited in single failure analysis to mitigate the event.

6. Revise DCD Revision 16, Section 10.3.1.1, "Safety Design Basis" as follows:

10.3.1.1 Safety Design Basis

- The nonsafety-related turbine stop, turbine control, turbine bypass, and ~~moisture separator reheater stop valves~~ moisture separator reheater 2nd stage steam isolation valves are credited in a single failure analysis to mitigate the event for those cases in which the rupture of the main steam or feedwater piping inside containment is the postulated initiating event.

7. Revise DCD Revision 16, Section 10.3.4.2, "In-service Testing" as follows:

10.3.4.2 In-service Testing

The performance and structural leaktight integrity of system components are demonstrated by operation.

Additional description of in-service inspection and in-service testing of ASME Code, Section III, Class 2 and 3 components is contained in Section 6.6 and subsection 3.9.6. The nonsafety-related turbine stop, turbine control, and moisture separator reheater 2nd stage steam isolation valves~~moisture separator reheater control valves~~ are included in the inservice test program discussed in subsection 3.9.6.

8. Revise DCD Revision 16, Table 10.3.2-4, "Main Steam Branch Piping (2.5-Inch and Larger) Downstream Of MSIV" as follows:

Table 10.3.2-4

MAIN STEAM BRANCH PIPING (2.5-INCH AND LARGER) DOWNSTREAM OF MSIV

Description	Maximum Steam Flow	Shutoff Valve	Valve Closure Time	Actuator	Comments
Turbine bypass lines to condenser; 6 lines total	998,000 lb/hr each line	12-in. globe (turbine bypass valve)	5 sec or less[a] when tripped closed	Air operator, fail close	Bypass valve is tripped closed on main steam isolation signal
Reheating steam to moisture separator reheater (MSR), 24 lines total	242,000 ~~247,000~~ lb/hr, each MSR	10-in. globe (MSR reheat 2nd stage steam isolation valve, 2 each)~~12-in. globe (reheat steam supply control valve 2 each) and 8-in. (reheat steam supply bypass valve, 2 each)~~	5 sec or less[a]	Air operators; fail close	Main steam flow to reheater ceases (thermodynamically) following turbine trip flow ceases following valve closure on a main steam isolation signal

9. Revise AP1000 DCD, Revision 16, Figure 10.3.2-2, "Main Steam System Diagram" as follows:

New detail:

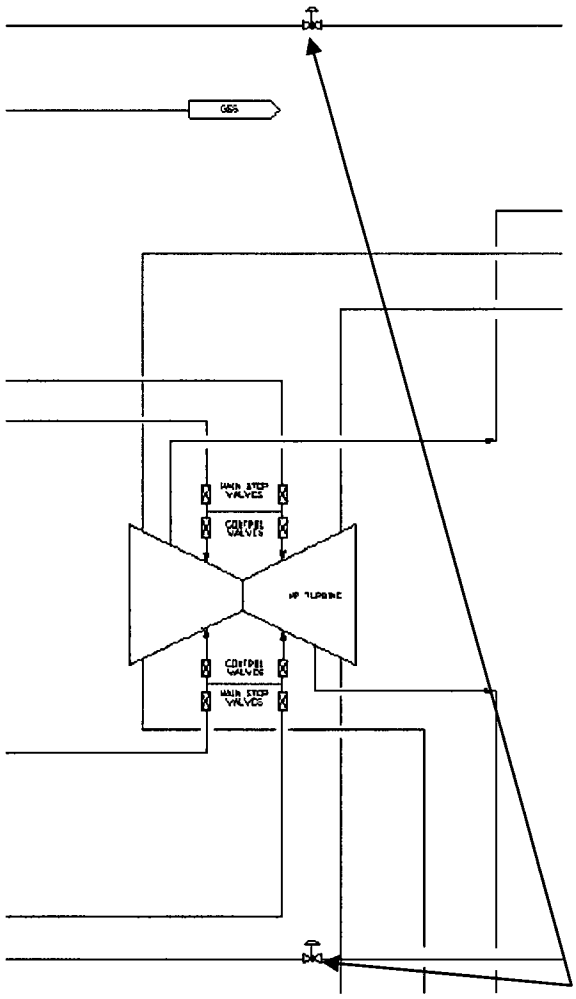

Valves now shown as AOVs

10. Revise AP1000 DCD, Revision 16, Section 14.2.9.2.1, "Main Steam System Testing" as follows:

14.2.9.2.1 Main Steam System Testing

(2 paragraphs unchanged)

General Test Method and Acceptance Criteria

Main steam system performance is observed and recorded during a series of individual component and integrated system testing. The following testing demonstrates that the system operates as described in Section 10.4 and appropriate design specifications:

Proper operation of the following system valves is verified.

- Turbine steam stop valves
- Turbine bypass valves
- Auxiliary steam system supply header isolation valve
- Main steam moisture separator reheater 2nd stage steam isolation valve~~Main steam reheat supply steam control valve~~
- Extraction steam isolation and non-return valves

This testing includes actuation of these valves from the main control room. The ability of these valves to isolate steam flow is verified during hot functional testing.

11. Revise DCD Revision 16, Table 15.0-8, "Nonsafety-Related System and Equipment Used For Mitigation Of Accidents" (note) as follows:

Table 15.0-8

NONSAFETY-RELATED SYSTEM AND EQUIPMENT USED FOR MITIGATION OF ACCIDENTS

Event	Nonsafety-related System and Equipment
15.1.5 Feedwater system malfunctions that result in an increase in feedwater flow	Main feedwater pump trip
15.1.4 Inadvertent opening of a steam generator relief or safety valve	MSIV backup valves[1] Main steam branch isolation valves
15.1.5 Steam system piping failure	MSIV backup valves[1] Main steam branch isolation valves
15.2.7 Loss of normal feedwater	Pressurizer heater block
15.5.1 Inadvertent operation of the core makeup tanks during power operation	Pressurizer heater block
15.5.2 Chemical and volume control system malfunction that increases reactor coolant inventory	Pressurizer heater block
15.6.3 Steam generator tube rupture	Pressurizer heater block MSIV backup valves[1] Main steam branch isolation valves
15.6.5 Small-break LOCA	Pressurizer heater block

Note:

——These include the turbine stop or control valves, the turbine bypass valves, and the moisture separator reheater 2nd stage steam isolation valves.~~moisture separator reheat steam supply control valve.~~

12. Revise DCD Revision 16, Chapter 16 Technical Specifications and Bases 3.7.2 as follows:

3.7 PLANT SYSTEMS

3.7.2 Main Steam Isolation Valves (MSIVs)

(two paragraphs unchanged)

ACTIONS

CONDITION	REQUIRED ACTION	COMPLETION TIME
A. One MSIV inoperable in MODE 1.	A. Restore valve to OPERABLE status.	8 hours
B. One or more of the turbine stop valves and its associated turbine control valve, turbine bypass valves, or moisture separator ~~reheat supply~~reheater 2nd stage steam ~~control~~isolation valves inoperable in MODE 1.	B. Restore valve to OPERABLE status.	72 hours

ACTIONS (continued)

CONDITION	REQUIRED ACTION	COMPLETION TIME
C. Two MSIVs inoperable in MODE 1. <u>OR</u>	C.1 Be in MODE 2.	6 hours

ACTIONS (continued)

CONDITION	REQUIRED ACTION	COMPLETION TIME
One MSIV inoperable and one or more of the turbine stop valves and its associated turbine control valve, all turbine bypass valves, or moisture separator ~~reheat supply~~reheater 2nd stage steam ~~control~~isolation valves inoperable in MODE 1. OR Required Action and associated Completion Time of Condition A or B not met.		

ACTIONS (continued)

CONDITION	REQUIRED ACTION	COMPLETION TIME
D. ---------- **- NOTE -** Separate Condition entry is allowed for each MSIV. ---------- One or two MSIVs inoperable in MODE 2, 3, or 4. OR One or more of the turbine stop valves and its associated turbine control valve, all turbine bypass valves, or moisture separator ~~reheat supply~~reheater 2nd stage steam ~~control~~isolation valves inoperable in MODE 2, 3, or 4.	D.1 Isolate associated steam flow path. AND D.2 Verify flow path remains closed.	8 hours Once per 7 days

SURVEILLANCE REQUIREMENTS

SR 3.7.2.2	---------- **- NOTE -** Only required to be performed prior to entry into MODE 2. ----------	

	Verify turbine stop, turbine control, turbine bypass, and moisture separator ~~reheat supply~~reheater 2nd stage steam ~~control~~isolation valves' closure time ≤5 seconds on an actual or simulated actuation signal.	In accordance with the Inservice Testing Program

B 3.7 PLANT SYSTEMS

B 3.7.2 Main Steam Isolation Valves (MSIVs)

BASES

BACKGROUND

(Two paragraphs unchanged)

The MSIVs, turbine stop and control valves, turbine bypass valves, and moisture separator ~~reheat supply~~reheater 2nd stage steam ~~control~~isolation valves close on a main steam isolation signal generated by either low steam line pressure, high containment pressure, Low Tcold, or high negative steam pressure rate. The MSIVs fail closed on loss of control air or actuation signal from either of two 1E power divisions.

Each MSIV has an MSIV bypass valve. Although these bypass valves are normally closed, they receive the same emergency closure signal as do their associated MSIVs. The MSIVs may also be actuated manually.

A description of the MSIVs is found in the Section 10.3 (Ref. 1). Descriptions for the turbine bypass valves, and moisture separator ~~reheat supply~~reheater 2nd stage steam ~~control valve~~isolation valves are found in the Section 10.4 (Ref. 6).

APPLICABLE SAFETY ANALYSES

(four paragraphs unchanged)

BASES

APPLICABLE SAFETY ANALYSES (continued)

LCO

This LCO requires that one MSIV in each of the two steam lines be OPERABLE. The MSIVs are considered OPERABLE when their isolation times are within limits, and they close on an isolation actuation signal.

This LCO requires that four turbine stop valves or their associated turbine control valve, six turbine bypass valves, and ~~four~~two moisture separator ~~reheat supply~~reheater 2nd stage steam ~~control valve~~isolation valves be OPERABLE. A valve is considered OPERABLE when its isolation time is within the safety analysis isolation time limit of 5 seconds and it closes on an MSIV actuation signal. The turbine bypass valves are alternatively considered OPERABLE when closed and administratively maintained closed with automatic actuation blocked as appropriate.

LCO (continued)

(two paragraphs unchanged)

APPLICABILITY

The MSIVs, turbine stop or associated turbine control valves, turbine bypass valves, and moisture separator ~~reheat supply~~reheater 2nd stage steam ~~control~~isolation valves must be OPERABLE in MODE 1 and MODES 2, 3, and 4, except when steam flow is isolated when there is significant mass and energy in the RCS and steam generators. Therefore, these valves must be OPERABLE or closed. When these valves are closed, they are already performing their required function.

ACTIONS (continued)

B.1

With any number of the turbine stop valves and the associated turbine

BASES

control valve, turbine bypass, or moisture separator ~~reheat supply~~reheater 2nd stage steam ~~control~~isolation valves inoperable in MODE 1, action must be taken to restore OPERABLE status within 72 hours. Some repairs to the valves can be made with the plant hot. The 72 hour Completion Time is reasonable considering the low probability of an accident occurring during this time period that would require a closure of these valves. With the backup isolation valves inoperable, the safety function, isolation of the steam flow path, is provided by the remaining OPERABLE valves, but cannot accommodate a single failure. The assumptions and criteria of the accident analyses are preserved by the ability to automatically isolate the steam flow path.

BASES

SURVEILLANCE REQUIREMENTS (continued)

SR 3.7.2.2

This SR verifies that the turbine stop, turbine control, turbine bypass, and moisture separator ~~reheat supply~~reheater 2nd stage steam ~~control~~isolation valves' closure time is ≤5.0 seconds, on an actual or simulated actuation signal. These alternate downstream isolation valves must meet the MSIV isolation time assumed in the accident and containment analyses. *(remainder of paragraph unchanged)*

PRA Revision:

None

Technical Report (TR) Revision:

None