DiabloCanyonNPEm Resource

From: Braico, Kevin [KNBm@pge.com]
Sent: Wednesday, January 19, 2011 12:53 PM
To: Ferrer, Nathaniel
Subject: DCPP LR Boundary Drawing for Makeup Water Phone Call
Attachments: LR-DCPP-16-106716-11 Rev 1.pdf

Nate,

We will be referencing this boundary drawing during today's 1000 PST phone call.
<<LR-DCPP-16-106716-11 Rev 1.pdf>>

Thanks,

Kevin Braico
DCPP License Renewal Engineer
142 Cross St. Suite 200
San Luis Obispo, CA 93405
Phone: (805) 781-9414

Hearing Identifier: DiabloCanyon_LicenseRenewal_NonPublic
Email Number: 2518

Mail Envelope Properties (55BB638B275112458B1A20FDB4F9EFC607EDB193)

Subject: DCPP LR Boundary Drawing for Makeup Water Phone Call
Sent Date: 1/19/2011 12:53:06 PM
Received Date: 1/19/2011 12:53:30 PM
From: Braico, Kevin

Created By: KNBm@pge.com

Recipients:
"Ferrer, Nathaniel" <Nathaniel.Ferrer@nrc.gov>
Tracking Status: None

Post Office: exchange15.Utility.pge.com

Files	**Size**	**Date & Time**
MESSAGE	269	1/19/2011 12:53:30 PM
LR-DCPP-16-106716-11 Rev 1.pdf	415949	

Options
Priority: Standard
Return Notification: No
Reply Requested: No
Sensitivity: Normal
Expiration Date:
Recipients Received:

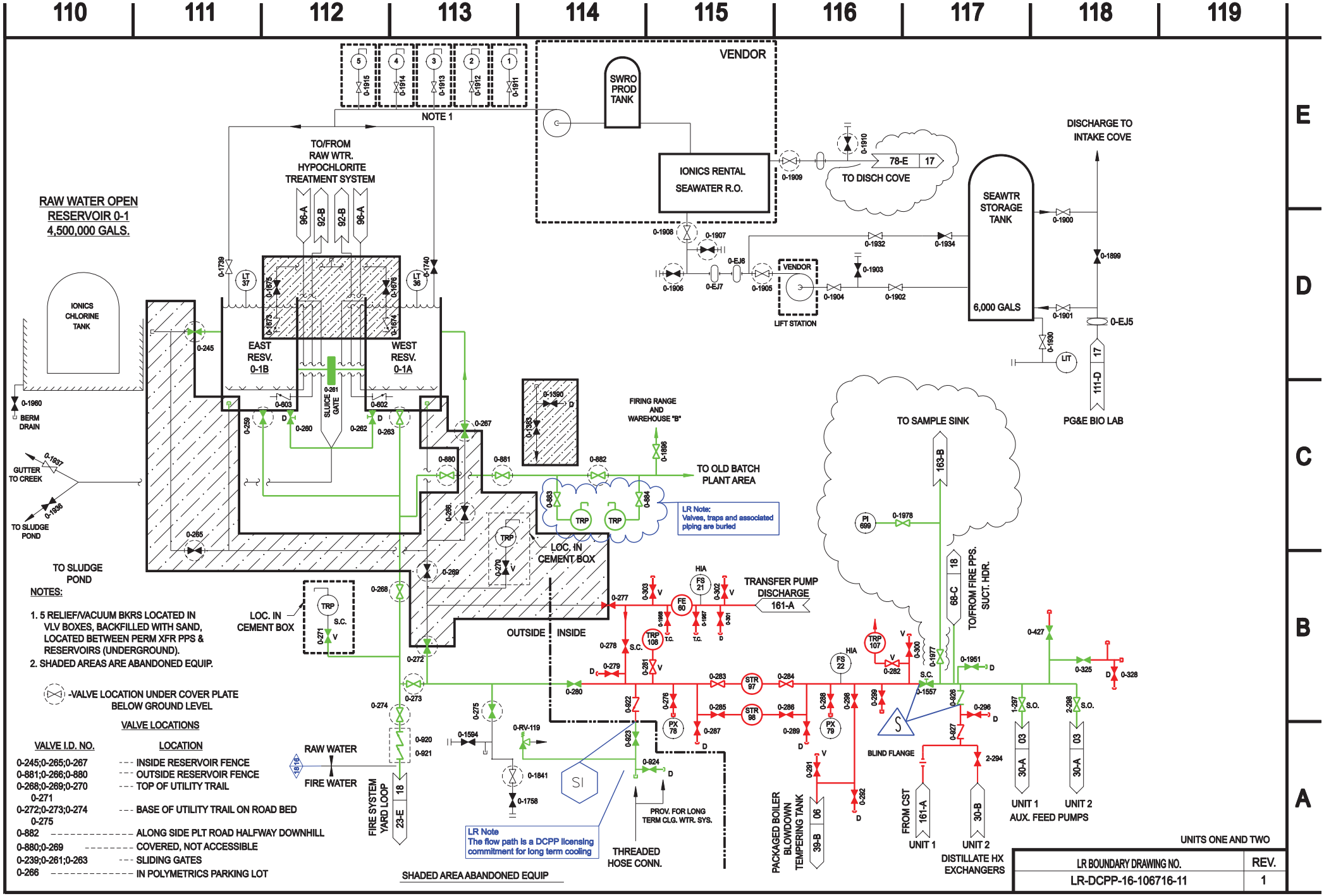
110
111
112
113
114
115
116
117
118
119
E
D
C
B
A
VENDOR
SWRO PROD TANK
IONICS RENTAL SEAWATER R.O.
NOTE 1
TO/FROM RAW WTR. HYPOCHLORITE TREATMENT SYSTEM
RAW WATER OPEN RESERVOIR 0-1 4,500,000 GALS.
IONICS CHLORINE TANK
EAST RESV. 0-1B
WEST RESV. 0-1A
SLUICE GATE
BERM DRAIN
GUTTER TO CREEK
TO SLUDGE POND
TO SLUDGE POND
NOTES:
1. 5 RELIEF/VACUUM BKRS LOCATED IN VLV BOXES, BACKFILLED WITH SAND, LOCATED BETWEEN PERM XFR PPS & RESERVOIRS (UNDERGROUND).
2. SHADED AREAS ARE ABANDONED EQUIP.
-VALVE LOCATION UNDER COVER PLATE BELOW GROUND LEVEL
VALVE LOCATIONS
VALVE I.D. NO. LOCATION
0-245;0-265;0-267 --- INSIDE RESERVOIR FENCE
0-881;0-266;0-880 --- OUTSIDE RESERVOIR FENCE
0-268;0-269;0-270 0-271 --- TOP OF UTILITY TRAIL
0-272;0-273;0-274 0-275 --- BASE OF UTILITY TRAIL ON ROAD BED
0-882 ---------- ALONG SIDE PLT ROAD HALFWAY DOWNHILL
0-880;0-269 -------- COVERED, NOT ACCESSIBLE
0-239;0-261;0-263 --- SLIDING GATES
0-266 ---------- IN POLYMETRICS PARKING LOT
LOC. IN CEMENT BOX
LOC. IN CEMENT BOX
OUTSIDE
INSIDE
RAW WATER
FIRE WATER
FIRE SYSTEM YARD LOOP
23-E
18
FIRING RANGE AND WAREHOUSE "B"
TO OLD BATCH PLANT AREA
LR Note: Valves, traps and associated piping are buried
TRANSFER PUMP DISCHARGE
161-A
LR Note The flow path is a DCPP licensing commitment for long term cooling
THREADED HOSE CONN.
PROV. FOR LONG TERM CLG. WTR. SYS.
SHADED AREA ABANDONED EQUIP
PACKAGED BOILER BLOWDOWN TEMPERING TANK
39-B
06
TO DISCH COVE
78-E
17
LIFT STATION
SEAWTR STORAGE TANK
6,000 GALS
DISCHARGE TO INTAKE COVE
PG&E BIO LAB
111-D
17
TO SAMPLE SINK
163-B
68-C
18
TO/FROM FIRE PPS. SUCT. HDR.
BLIND FLANGE
FROM CST
161-A
UNIT 1
30-B
UNIT 2
DISTILLATE HX EXCHANGERS
UNIT 1 AUX. FEED PUMPS
UNIT 2
30-A
03
UNITS ONE AND TWO
LR BOUNDARY DRAWING NO.
LR-DCPP-16-106716-11
REV.
1
SYS16671611
106716-S11-R115