9.2.4 STARTUP TEST PLAN

An overall startup testing program procedure will control the startup tests. Individual startup test procedures will be used to supplement the approved ISFSI operation procedures as required. The startup test procedures will verify the performance of the storage system and ensure that plant equipment complies with requirements.

Actual storage system components with a MPC handling simulator will be utilized for startup testing. An MPC handling simulator will be substituted for the MPC. The MPC handling simulator will mimic the external diameter, length, and center of gravity of a loaded MPC and will be equipped with attachment locations for lift cleats. One or more MPC mock-ups will be used to test the automated welding machine, including performance of the MPC-lid-closure weld, MPC-lid-weld removal, moisture removal, helium filling, and MPC cool down.

Personnel performing and managing the physical work during startup testing will have completed applicable ISFSI training program requirements. Refer to Section 9.3.

The following operations will be included in the startup tests for the Diablo Canyon ISFSI:

(1) Preparing the transfer cask and MPC for movement into the spent fuel pool (SFP).

(2) Moving the transfer cask into the fuel handling building/auxiliary building (FHB/AB), and placement in the Unit 2 seismic restraint structure.

(3) Placing the transfer cask into the SFP and simulating movement of fuel, using a dummy fuel assembly, into the transfer cask.

(4) Removing the transfer cask from the SFP and moving it to the Unit 2 cask washdown area and into the seismic restraint structure.

(5) Decontaminating the transfer cask.

(6) Welding the MPC lid, moisture removal, filling the MPC with helium, MPC cooldown, and lid weld removal. These functions may be performed outside of the FHB/AB for ALARA reasons.

(7) Installing the transfer cask top lid.

(8) Loading the transfer cask onto the Low Profile Transporter using the FHB/AB crane and removal from the FHB/AB.

(9) Transporting the loaded transfer cask from the FHB/AB to the CTF using the transporter.

(10) Movement of the MPC simulator from the transfer cask into a storage cask at the CTF.

(11) Placing the top lid on a loaded overpack and raising the storage cask out of the CTF using the transporter.

(12) Transporting a loaded overpack from the CTF to the ISFSI pad location.

(13) Positioning and fastening the loaded overpack to the ISFSI pad.

(14) Removing the loaded overpack from the ISFSI pad.

(15) Transporting the loaded overpack from the ISFSI pad to the CTF.

(16) Removing the top lid off a loaded overpack.

(17) Transfer of the MPC simulator from the overpack back into the transfer cask.

(18) Transporting the loaded transfer cask to the FHB/AB using the onsite transporter.

(19) Installation and operation of the supplemental cooling system.

Discrepancies between the FSAR requirements and the results from startup tests will be resolved in accordance with existing DCPP problem resolution procedures.

TABLE 10.1-1

OPERATING CONTROLS AND LIMITS

Areas For Operating Controls and Limits	Conditions Or Other Items To Be Controlled
Fuel characteristics	Physical condition
Multi-Purpose Canister	~~Vacuum~~ ~~d~~*D*rying ~~pressure or~~ temperature Helium backfill pressure
Spent Fuel Storage Cask	Heat removal capability
Administrative Controls	Fuel loading verification including assembly location

10.2 DEVELOPMENT OF OPERATING CONTROLS AND LIMITS

This section provides an overview of, and the general bases for, operating controls and limits specified for the Diablo Canyon ISFSI.

10.2.1 FUNCTIONAL AND OPERATING LIMITS, MONITORING INSTRUMENTS, AND LIMITING CONTROL SETTINGS

To be consistent with the guidance contained in Interim Staff Guidance Document 11 (ISG-11), Revision 3, issued on November 17, 2003 (Reference 3), fuel assemblies to be stored initially at the Diablo Canyon ISFSI ~~will b~~*were* limited to a nominal maximum average burnup of ≤45,000 MWD/MTU (defined in ISG-11 as low burnup fuel) (see PG&E Letter DIL-04-002, dated January 16, 2004). ~~This burnup limit is more restrictive than that contained in Amendment 1 of the HI-STORM 100 System Certificate of Compliance (CoC) 1014, which is otherwise used as the basis for this FSAR.~~

Because the HI-STORM 100 System licensing and design basis incorporated by reference in this FSAR ~~is~~ *was originally* taken from Revision 1A of the HI-STORM 100 System FSAR, many of the design and safety evaluations discussed in this FSAR ~~a~~*were* for bounding burnups exceeding those *initially* authorized for loading at the Diablo Canyon ISFSI (see, for example, the ISFSI thermal design discussed in Section 4.2, the radiological analyses in Chapter 7, and selected accident analyses in Chapter 8). Based on the fuel burnup limit of ≤45,000 MWD/MTU, these generic design and safety evaluations ~~a~~*were* conservative and bound*ed* the allowed cask contents.

The fuel burnup limit is specified in the Diablo Canyon ISFSI Technical Specifications. A review of Materials License SNM-2511 and it associated Safety Evaluation Report; PG&E Letter DIL-04-002; and ISG-11, Revision 3, shows there is no regulatory requirement to include burnup uncertainty when evaluating compliance with TS burnup limits. Therefore, burnup uncertainty will not be applied to calculated fuel assembly burnup values when evaluating the eligibility of fuel assemblies for storage at the Diablo Canyon ISFSI. However, PG&E will conservatively apply a 5 percent burnup uncertainty allowance when calculating the decay heat for each loaded MPC.

The NRC reviewed and accepted a generic HI-STORM System design that would allow higher fuel burnups for loading, consistent with the guidance of ISG-11, Revision 3. This approval has been included in CoC License Amendment 1014-2. PG&E ~~anticipates requesting~~ *updated the* authoriz*ed*~~ation~~ *contents for the Diablo Canyon ISFSI* to store fuel with higher burnups consistent with ~~future~~ HI-STORM CoC ~~a~~*A*mendment~~s~~ *3 in the MPC-32 in License Amendment 2, issue by the NRC on xx/xx/2011*.

This section provides requirements for the controls or limits that apply to operating variables classified as important to safety and are observable and measurable. The operating variables required for the safe operation of the Diablo Canyon ISFSI are:

- Spent fuel characteristics
- Spent fuel storage cask (SFSC) heat removal capability
- Multi-purpose canister (MPC) dissolved boron concentration level
- Annulus gap water requirement during moisture removal for loading and reflooding for unloading
- Water temperature of a flooded MPC
- MPC vacuum pressures
- MPC recirculation gas exit temperature
- Helium purity
- MPC helium backfill pressures
- Gas exit temperature of a MPC prior to reflooding
- *Supplemental Cooling System (SCS)*

Each of the specifications for these characteristics is provided below with the exception of the MPC dissolved boron concentration, and heat removal parameters, which are provided in the Diablo Canyon ISFSI TS and their bases. Although provided in the sections below, the TS and bases also provide Limiting Conditions for Operation and bases for maintaining the integrity of the MPC during loading and unloading. These include vacuum pressure, recirculation gas temperature, backfill pressure, and leak rate during loading, and exit gas temperature during unloading.

10.2.1.1 Fuel Characteristics

The Diablo Canyon ISFSI is designed to provide interim storage for up to 4,400 fuel assemblies, which accommodates the number of assemblies predicted to be used during the licensed operating life of the plant. The Diablo Canyon ISFSI storage system uses four MPC types for the storage of fuel assemblies, fuel debris and associated nonfuel hardware. The DCPP fuel is normally stored as nonconsolidated fuel assemblies both with and without control components. The intact fuel assemblies are stored in either the MPC-24, MPC-24E, MPC-24EF, or MPC-32 canisters. The damaged fuel assemblies can only be stored in MPC-24E or MPC-24EF canisters, and the fuel debris can only be stored in MPC-24EF canisters. Damaged fuel or fuel debris will be placed in a damaged fuel container before loading into an MPC. The fuel debris can be consolidated; however, the amount of debris is limited to the equivalent of a single intact fuel assembly.

Fuel qualification is based on the requirements for criticality safety, decay heat removal, radiological protection, and structural integrity. The analysis presented in Chapters 4, 7, and 8 documents the qualification of DCPP inventory of spent fuel assemblies and associated nonfuel hardware for storage in the Diablo Canyon ISFSI storage system design.

During the operation of DCPP, fuel integrity has been, and continues to be, monitored. Through the detection of radiochemistry changes in the reactor coolant system, most fuel damage is assessed. When damaged rods are suspected, assemblies are inspected as they are removed from the core. All assemblies with positive indication of damage are again inspected in the spent fuel pool (SFP) to determine numbers and location of rods in the assembly that have failed cladding. If the fuel assembly is to be placed back in the reactor core, any failed rods are removed and replaced with nonfuel rods of equivalent dimensional properties. If the suspected damaged fuel assemblies are at the end of their cycle, the assemblies may be stored in the SFP without repair. During this process, all known rod failures are noted and their assemblies are tracked. If the failure is visible from the exterior of the assembly, the damage may be video taped. For assemblies that are removed from the reactor core and were not inspected at that time, inspections will be performed prior to loading these assemblies into an MPC for storage. This will ensure that there are no undetected failed rods in any assembly that is placed in an MPC.

Under this failure detection process, inspections to date have found limited failures. Where single failed rods have been identified and removed, they are being stored in the SFP and will ultimately be stored in an MPC that can contain fuel debris. This detection process, along with the past history of plant operations and SFP fuel storage, provide a high level of confidence that the current spent fuel and associated nonfuel hardware will meet the criteria for storage in the appropriate MPC. In addition, based on the condition of the current spent fuel, the continued maintenance of the reactor coolant and SFP water chemistry requirements, and proper handling of the fuel, there is a high level of confidence that future spent fuel assemblies will meet the criteria for storage in the appropriate MPC.

A cask-loading plan ensures that no damaged fuel assemblies are loaded into an MPC-24 or MPC-32 canister. Damaged fuel is only stored in either an MPC-24E or MPC-24EF canister. Fuel debris is only stored in an MPC-24EF canister. If the structural integrity criterion is met, then approval for dry storage for a given assembly is made. This qualification is documented and subsequently referenced in Diablo Canyon ISFSI operating procedures prior to loading spent fuel assemblies into the MPC.

The cask-loading plan provides a loading sequence based on the various characteristics of the fuel assemblies being loaded. There are two main fuel-loading strategies used: uniform fuel loading and regionalized fuel loading. In addition, there is a fuel loading sub-strategy called preferential fuel loading. All of these loading strategies are designed to ensure that the design bases of the fuel, MPCs, and

overpacks are maintained.

Uniform fuel loading is used when the fuel assemblies being loaded are all of similar burnup rates, decay heat levels, and post-irradiation cooling times. In this case the actual location of each assembly is less critical and assemblies can be placed at any location in the MPC. However, if the post-irradiation cooling times for any of the assemblies are different by ≥ 1 year, preferential fuel loading is required to be considered.

Preferential fuel loading requires that the fuel assemblies with the longest post-irradiation cooling times be located at the periphery of the MPC basket. Fuel assemblies with shorter post-irradiation cooling times are placed toward the center of the basket. Preferential fuel loading is a requirement in addition to other MPC loading restrictions such as those for nonfuel hardware and damaged fuel containers.

Regionalized fuel loading is used when high heat emitting fuel assemblies are to be stored in an MPC. This loading strategy allows these specific assemblies to be stored in locations in the center of the MPC basket provided lower heat emitting fuel assemblies are stored in the peripheral storage locations. Use of regionalized fuel loading must consider other restrictions on loading such as those for nonfuel hardware and damaged fuel containers. Regionalized fuel loading meets the intent of preferential fuel loading.

The following controls ensure that each fuel assembly is loaded into a known cell location within a qualified MPC:

- A cask-loading plan is independently verified and approved.
- A fuel movement sequence is based upon the written loading plan. All fuel movements from any rack location are performed under controls that ensure strict, verbatim compliance with the fuel movement sequence.
- Prior to placement of the MPC lid, all fuel assemblies and associated nonfuel hardware, if included, is either video taped or visually documented by other means, and independently verified, by ID number, to match the fuel movement sequence.

A cognizant engineer is responsible for performing a third independent verification to ensure that the fuel in the MPCs is placed in accordance with the original cask-loading plan.

Based on the qualification process of the spent fuel and the administrative controls used to ensure that each fuel assembly is loaded into the correct location within an MPC, incorrect loading of an MPC is not considered to be a credible event.

10.2.1.2 Fuel Characteristics (Allowable Content)

The characteristics of the fuel that are allowable for storage in the MPCs are as follows:

- Intact fuel assemblies, damaged fuel assemblies, fuel debris, and nonfuel hardware meeting the limits specified in Tables 10.2-1, 10.2-2, 10.2-3, and 10.2-4 and other referenced tables may be stored in the SFSC system. These FSAR tables and specifications are duplicated in Tables 2.2-1 through 2.2-10 of the Diablo Canyon ISFSI TS.

- For MPCs partially loaded with damaged fuel assemblies or fuel debris, all remaining intact fuel assemblies in the MPC shall meet the decay heat generation limits for the damaged fuel assemblies. This requirement applies only to uniform fuel loading.

Fuel proposed for storage at the Diablo Canyon ISFSI is bounded by the thermal analyses described in References 1 and 2. The thermal design is also summarized in Section 4.2.3.3.3 of this FSAR. Off-normal and accident conditions are addressed in Sections 11.1 and 11.2, respectively, of Reference 1.

10.2.1.2.1 Alternate MPC-32 Fuel Selection Criteria

To allow loading of high burnup fuel assemblies in the Diablo Canyon ISFSI site specific MPC-32, without changing the allowed heat load or helium fill pressure, the fuel loading selection criteria of HI-STORM CoC Amendment 3 (Reference 4) were added.

The maximum allowable fuel assembly average burnup for a given MINIMUM ENRICHMENT is calculated as described below for minimum cooling times between 5 and 20 years using the maximum permissible decay heat determined in Table 10.2-7 or 10.2-9. Different fuel assembly average burnup limits may be calculated for different minimum enrichments (by individual fuel assembly) for use in choosing the fuel assemblies to be loaded into a given MPC.

1. *Choose a fuel assembly minimum enrichment E_{235}.*
2. *Calculate the maximum allowable fuel assembly average burnup for a minimum cooling time between 5 and 20 years using the following equation below:*

   $$Bu = (A \times q) + (B \times q^2) + (C \times q^3) + [D \times (E_{235})^2] + (E \times q \times E_{235}) + (F \times q^2 \times E_{235}) + G$$

   Where:

   Bu = Maximum allowable average burnup per fuel assembly (MWD/MTU)

   q = Maximum allowable decay heat per storage location, in kilowatts, determined from Table 10.2-7 or 10.2-9 (e.g. 898 watts, use 0.898)

   E_{235} = Minimum fuel assembly average enrichment (wt% ^{235}U) (e.g., for 4.05 wt%, use 4.05)

   A through G = Coefficients from Table 10.2-11.
3. *Calculated burnup limits shall be rounded down to the nearest integer.*

4. *Calculated burnup limits greater than 68,200 MWD/MTU must be reduced to be equal to this value.*
5. *Linear interpolation of calculated burnups between cooling times for a given fuel assembly maximum decay heat and minimum enrichment is permitted. For example, the allowable burnup for a cooling time of 5.5 years may be interpolated between those burnups calculated for 5 year and 6 years.*
6. *Each ZR-clad fuel assembly to be stored must have a MINIMUM ENRICHMENT greater than or equal to the value used in Step 1.*
7. *When complying with the maximum fuel storage location decay heat limits, users must account for the decay heat from both the fuel assembly and any NON-FUEL HARDWARE, as applicable for the particular fuel storage location, to ensure the decay heat emitted by all contents in a storage location does not exceed the limit.*

10.2.1.3 Uniform and Preferential Fuel Loading

Fuel assemblies used in uniform or preferential fuel loading shall meet all applicable limits specified in Tables 10.2-1, 10.2-2, 10.2-3, 10.2-4, and 10.2-5. Fuel assembly burnup, decay heat, and cooling time limits for uniform loading are specified in Tables 10.2-6 and 10.2-7 *and Section 10.2.1.2.1*. Preferential fuel loading shall be used during uniform loading (that is, any authorized fuel assembly in any fuel storage location) whenever fuel assemblies with significantly different post-irradiation cooling times (≥ 1 year) are to be loaded in the same MPC. Fuel assemblies with the longest post-irradiation cooling times shall be loaded into fuel storage locations at the periphery of the basket. Fuel assemblies with shorter post-irradiation cooling times shall be placed toward the center of the basket. Regionalized fuel loading as described in Section 10.2.1.4 below meets the intent of preferential fuel loading.

10.2.1.4 Regionalized Fuel Loading

Fuel may be stored using regionalized loading in lieu of uniform loading to allow higher heat emitting fuel assemblies to be stored than would otherwise be able to be stored using uniform loading. Figures 10.2-1 through 10.2-3 (these figures are duplicated in the Diablo Canyon ISFSI TS as Figures 2.1-1 through 2.1-3), define the regions for the MPC-24; MPC-24E/MPC-24EF; and MPC-32 models, respectively. Fuel assembly burnup, decay heat, and cooling time limits for regionalized loading are specified in Tables 10.2-8 and 10.2-9*, or Section 10.2.1.2.1*. In addition, fuel assemblies used in regionalized loading shall meet all other applicable limits specified in Tables 10.2-1, 10.2-2, 10.2-3, 10.2-4, and 10.2-5. Limitations on nonfuel hardware to be stored with their associated fuel assemblies are provided in Table 10.2-10.

10.2.1.5 For Allowable Content - Functional and Operating Limits Violations

If any fuel specifications or loading conditions above are violated, the following Diablo Canyon ISFSI TS actions shall be completed:

- The affected fuel assemblies shall be placed in a safe condition.

- Within 24 hours, notify the NRC Operations Center.
- Within 30 days, submit a special report that describes the cause of the violation, and actions taken to restore compliance and prevent recurrence.

10.2.2 MPC LOADING CHARACTERISTICS

The confinement of radioactivity during the storage of spent fuel and associated nonfuel hardware in the MPC is ensured by the structural integrity of the strength-welded MPC. However, long-term integrity of the fuel and cladding depends on storage in an inert heat removal environment inside the MPC. This environment is established by removing water from the MPC and backfilling the cavity with an inert gas.

The loading process of an MPC involves placing a transfer cask with an empty MPC in the SFP and loading it with fuel assemblies (intact or damaged that meet the specifications for allowable content discussed above), fuel debris, and/or nonfuel hardware allowed per the type of MPC. Once this is complete a lid is then placed on the MPC. The transfer cask and MPC are raised to the SFP surface. The transfer cask and MPC are then moved into the cask washdown area where dose rates are measured and the MPC lid is welded to the MPC shell and the welds are inspected and tested. The water is drained from the MPC cavity and moisture removal is performed. The MPC cavity is backfilled with helium. Additional dose rates are measured and the MPC vent and drain cover plates and closure ring are installed and welded. Nondestructive examination (NDE) inspections are performed on the welds.

As a part of the loading process there are several characteristics that must be maintained to ensure that the allowable contents placed in any MPC remains stable and intact. These characteristics involve maintaining the MPC cavity temperature. During the loading process there are times when the loaded MPC is water filled and times when it is empty of water. As a result, there are characteristics that must address each of these two conditions. One of these characteristics is MPC water temperature. The other characteristic is maintaining the water level and recirculation in the annular gap between the transfer cask and the MPC, which only applies to vacuum drying.

Also during the loading process there are several characteristics vital to ensuring that the resulting MPC internal environment is conducive to long-term heat removal and maintaining the integrity of the fuel cladding. These characteristics are: limiting the moisture in the MPC; backfilling the MPC with high quality inert gas; and limiting the leakage of this inert environment over time. The dry, inert and sealed MPC atmosphere is required to be in place during transport and storage operations.

10.2.2.1 Annulus Gap Water Requirement

~~For loading in the MPC-24 or MPC-24E/EF with heat loads up to 20.8 kW, maintaining water in the annulus between the MPC and the HI-TRAC transfer cask is sufficient to ensure the thermal analysis for the vacuum condition is preserved. For heat loads in~~

~~the MPC-24 or MPC-24E/EF greater than 20.8 kW or any heat load in the MPC-32, the water in the annulus needs to be continuously flushed during vacuum drying operations (References 1 and 2, Section 4.5.1.1.4.1),~~

~~As long as the annular gap water level is maintained with water and the temperature of the water in the gap is maintained below boiling through continuous flushing, there is no time limitation for refilling the MPC with borated water or establishing an acceptable inert environment in the MPC. However, without continuous flushing of the annulus water gap, there is a limit of 2 hours to establish this process or establish an inert environment.~~

During ~~the loading process, prior to start of the removal of water from the MPC through the vacuum drying process, the annular gap shall be filled and continuously flushed throughout the drying and backfill process. For heat loads in the MPC-24 or MPC-24E/EF greater than 20.8 kW or any heat load in the MPC-32, the water in the annulus needs to be continuously flushed with water during vacuum drying operations (References 1 and 2, Section 4.5.1.1.4.1). This water level shall be maintained until the MPC inert environment is established at an acceptable level to support long-term storage or the MPC is refilled with water. In addition, during~~ an unloading process the annular gap shall be filled with water prior to removal of the inert environment in the MPC cavity. The annulus gap must be kept free of water if the forced helium dehydration (FHD) system is used for MPC moisture removal.

Additionally, the annulus is filled when SCS is required, see section 10.2.2.7 for details.

10.2.2.2 MPC Water Temperature

During the loading and unloading processes, maintaining the integrity of the fuel in the MPC is the critical activity. As a result of decay heat produced by the spent fuel assemblies, providing a coolant source is imperative to maintaining control of cladding temperature and the fuel integrity. During these processes when there is water in the MPC, the water is considered the coolant source. As long as there is water in the MPC it will continue to perform the coolant function. This water should continue to perform its function as long as it does not reach the boiling temperature. As a result, the parameter that will best indicate the potential reduction of water would be the temperature of the water in the MPC. However, since monitoring the water temperature in the MPC directly may not always be possible, an analysis of the potential for the water to reach the boil-off temperature is performed to ensure that the boil-off temperature cannot be reached. This analysis is based on the decay heat levels of the contents and the various volumes of water in the MPC as it is loaded. The results of this analysis provide any time limitation or any requirement for compensatory measures.

While there is water in the MPC, there is adequate assurance through analysis that the temperature of that water in the MPC will not reach the boil-off level and that the volume of water in the MPC is not allowed to decrease significantly.

10.2.2.3 MPC Drying Characteristics

The cavity moisture removal ~~can be~~*is* performed by ~~using either vacuum drying or~~ the FHD system after the MPC has been drained of water. See Figure 10.2-4 for a schematic diagram of the FHD system. The NUREG-1567 acceptance criterion for dryness is ≤ 1 gram-mole per cask of oxidizing gases. This has been translated by the industry to be 3 torr for vacuum drying. For the recirculation drying process using the FHD system, measuring the temperature of the gas exiting the demoisturizer of the FHD system provides an indication of the amount of water vapor entrained in the helium gas in the MPC. Maintaining a demoisturizer exit temperature of less than or equal to 21°F for 30 minutes or more during the recirculation drying process ensures that the partial pressure of the entrained water vapor in the MPC is less than 3 torr.

~~When vacuum drying is used, any water that has not drained from the MPC cavity evaporates from the MPC cavity due to the vacuum. This drying is aided by the temperature increase due to the decay heat of the fuel. To ensure adequate drying the vacuum drying pressure in the MPC must be verified to be at ≤ 3 torr for ≥ 30 minutes. This low vacuum pressure is an indication that the cavity is dry and the moisture level in the MPC is acceptable.~~

When the FHD system is used, the remaining moisture in the MPC cavity is removed after all of the water that can practically be removed through the drain line using a hydraulic pump has been expelled in the water blowdown operation. The recirculation process using the FHD involves introducing dry gas into the MPC cavity that absorbs the residual moisture in the MPC. This humidified gas exits the MPC and the absorbed water is removed through condensation and/or mechanical drying. The dried gas is then forced back through the MPC until the gas exit temperature from the FHD demoisturizer is ≤ 21°F for at least 30 minutes. Meeting these temperature and time criteria ensures that the cavity is dry and the moisture level in the MPC is acceptable. The FHD system shall be designed to ensure that during normal operation (that is, excluding startup and shutdown ramps) the following criteria are met:

(1) The temperature of helium gas in the MPC shall be at least 15°F higher than the saturation temperature at coincident pressure.

(2) The pressure in the MPC cavity space shall be less than or equal to 60.3 psig (75 psia).

(3) The recirculation rate of helium shall be sufficiently high (minimum hourly throughput equal to ten times the nominal helium mass backfilled into the MPC for fuel storage operations) so as to produce a turbulent flow regime in the MPC cavity.

(4) The partial pressure of the water vapor in the MPC cavity will not exceed 3 torr if the helium temperature at the demoisturizer outlet is ≤ 21°F for a period of 30 minutes.

In addition to the above system design criteria, the individual modules shall be designed in accordance with the following criteria:

(1) The condensing module shall be designed to devaporize the recirculating helium gas to a dew point of 120°F or less.

(2) The demoisturizer module shall be configured to be introduced into its helium conditioning function after the condensing module has been operated for the required length of time to ensure that the bulk moisture vaporization in the MPC has been completed.

(3) The helium circulator shall be sized to effect the minimum flow rate of circulation required by the system design criteria described above.

(4) The preheater module shall be engineered to ensure that the temperature of the helium gas in the MPC meets the system design criteria described above.

The design of the FHD system is subject to the confirmatory analyses listed below to ensure that the system will accomplish the performance objectives set forth in this FSAR.

(1) System thermal analysis in Phase 1: Characterize the rate of condensation in the condensing module and helium temperature variation under Phase 1 operation (i.e., the scenario where there is some unevaporated water in the MPC) using a classical thermal-hydraulic model wherein the incoming helium is assumed to fully mix with the moist helium inside the MPC.

(2) System thermal analysis in Phase 2: Characterize the thermal performance of the closed loop system in Phase 2 (no unvaporized moisture in the MPC) to predict the rate of condensation and temperature of the helium gas exiting the condensing and the demoisturizer modules. Establish that the system design is capable to ensure that partial pressure of water vapor in the MPC will reach less than or equal to 3 torr if the temperature of the helium gas exiting the demoisturizer is predicted to be at a maximum of 21°F for 30 minutes.

(3) Fuel Cladding Temperature Analysis: A steady-state thermal analysis of the MPC under the forced helium flow scenario shall be performed using the methodology described in HI-STORM 100 FSAR Subsections 4.4.1.1.1 through 4.4.1.1.4 with due recognition of the forced convection process during FHD system operation. This analysis shall demonstrate that the peak temperature of the fuel cladding under the most adverse condition of FHD system operation (design maximum heat load, no

moisture, and maximum helium inlet temperature), is below the fuel cladding temperature limit for normal conditions of 400 °C.

If Diablo Canyon is the first user of the FHD system designed and built for the MPC drying function, the system will be subject to confirmatory testing as follows:

(1) A representative quantity of water will be placed in a manufactured MPC (or equivalent mock-up) and the closure lid and RVOAs installed and secured to create a hermetically sealed container.

(2) The MPC cavity drying test will be conducted for the worst case scenario (no heat generation within the MPC available to vaporize water).

(3) The drain and vent line RVOAs on the MPC lid will be connected to the terminals located in the preheater and condensing modules of the FHD system, respectively.

(4) The FHD system will be operated through the moisture vaporization (Phase 1) and subsequent dehydration (Phase 2). The FHD system operation will be stopped after the temperature of helium exiting the demoisturizer module has been at or below 21°F for 30 minutes (nominal). Thereafter, a sample of the helium gas from the MPC will be extracted and tested to determine the partial pressure of the residual water vapor in it. The FHD system will be deemed to have passed the acceptance testing if the partial pressure in the extracted helium sample is less than or equal to 3 torr.

At completion of the drying operation using the FHD system, the partial pressure of the helium/water vapor will be at 3 torr or less, however, the total pressure in the MPC will be approximately 2000 torr or 3 atm. To complete the process, when the FHD system is used, the FHD system is adjusted to provide a stable temperature in the MPC, and the pressure is adjusted to establish the helium fill conditions adjusted to the current MPC temperature. Maintaining positive pressure and helium flow through the MPC during the drying process ensures that the fuel cladding short-term temperature limit is not exceeded.

If the cavity moisture removal limits are not met, an engineering evaluation will be necessary to determine the potential quantity of moisture left within the MPC cavity. Once the quantity of moisture potentially left in the MPC cavity is determined, a corrective action plan shall be developed and actions initiated to the extent necessary to return the MPC to an analyzed condition. As the quantity of moisture estimated can range over a broad scale, different recovery strategies may be necessary.

Since moisture remaining in the cavity may represent a potential long-term degradation concern, immediate action is not necessary. The actions to develop and initiate the corrective actions should be undertaken as soon as possible commensurate with the

safety significance of the condition. Completion times for the determined corrective actions will be controlled by the DCPP corrective actions program and will be determined and controlled based on the safety significance of the condition.

10.2.2.4 MPC Helium Backfill Characteristics and Purity

Having the proper helium backfill pressure or density ensures adequate heat transfer from the fuel to the fuel basket and surrounding structure of the MPC. During the loading operation, once the dryness limits are met, the MPC cavity is backfilled with helium to provide the inert environment required for long-term storage. To ensure the proper environment is established the helium used in the backfill process shall have a purity of ≥ 99.995 percent. In addition, the helium backfill pressure shall be verified during loading for all MPCs to be ≥ 29.3 psig and ≤ 33.3 psig corrected to a baseline temperature of 70°F.

If it has been determined that the helium backfill pressure limit has not been met, an engineering evaluation shall be undertaken to determine the actual helium pressure within the MPC cavity. Since too much or too little helium in the MPC cavity represents a potential overpressure or heat removal degradation concern, the engineering evaluation shall be performed in a timely manner commensurate with the safety significance of the condition (that is, if it is not addressed there is a possibility of a failure to adequately cool the contained fuel resulting in cladding damage).

Once the helium pressure in the MPC cavity is determined, a corrective action plan shall be developed and initiated to the extent necessary to return the MPC to an analyzed condition. Since the helium pressure estimated can range over a broad scale, different recovery strategies may be necessary. Completion times for the determined corrective actions will be controlled by the DCPP corrective action program and will be determined and controlled based on the safety significance of the condition.

10.2.2.5 MPC Leakage Characteristics

The MPC helium leak rate limit ensures there is adequate helium in the MPC for long-term storage and proper heat removal. Since the lid to shell weld is relieved from leak testing per ISG-18, "The Design/Qualification of Final Closure Welds on Austenitic Stainless Steel Canisters as Confinement Boundary for Spent Fuel Storage and Confinement Boundary for Spent Fuel Transportation," leak rate acceptance limit is limited to the vent and drain port closure welds which are verified to meet the mass-like leaktight criteria of ANSI N14.5 (1997). This is defined as the rate of change of the pressure-volume product of the leaking fluid at test conditions. This allows the leakage rate as measured by a mass spectrometer leak detector (MSLD) to be compared directly to the acceptance limit without the need for unit conversion from test conditions to standard, or reference conditions.

During transport operations or storage operations if the vent and drain port closure weld helium leak rate limit is determined not to be met, an engineering evaluation shall be

performed to determine the impact of increased helium leak rate on heat removal and offsite dose. Since the SFSC is a ventilated system, any leakage from the MPC is transported directly to the environment. An increased helium leak rate represents a potential challenge to MPC heat removal and the offsite doses calculated in this FSAR confinement analyses, reasonably rapid action is warranted.

Once the cause and consequences of the elevated leak rate from the MPC are determined, a corrective action plan shall be developed and initiated to the extent necessary to return the MPC to an analyzed condition. Since the recovery mechanisms can range over a broad scale based on the evaluation performed, different recovery strategies may be necessary. An elevated helium leak rate represents a challenge to heat removal rates and offsite doses, reasonably rapid action and completion of the corrective actions shall be commensurate with the safety significance of the condition. Completion times for the determined corrective actions are controlled by the DCPP corrective action program and will be determined based on the safety significance of the condition

10.2.2.6 Returning MPC to Safe Condition

If for a loaded MPC the fuel cavity dryness, backfill pressure, or helium leakage rate cannot be successfully met or maintained for any reason, the MPC must be returned to a safe analyzed condition, which may ultimately require the fuel to be placed back in the SFP. The completion time for this effort shall be based on the safety significance of the condition. The completion time shall consider the time required to perform fuel cool-down operations, reflood the MPC, cut the MPC lid welds, move the transfer cask into the SFP, remove the MPC lid, and remove the spent fuel assemblies in an orderly manner and without challenging personnel.

10.2.2.7 Supplemental Cooling System Requirements

When fuel with a burnup in excess of 45,000 MWD/MTU (high burnup fuel) is loaded in an MPC, the MPC water gap shall be maintained through the use of a supplemental cooling system, following water removal from the MPC, when the MPC helium is not being circulated by the FHD. The supplemental cooling system (SCS) shall meet the following requirements:

(1) The system shall utilize a contamination free, high purity water to minimize corrosion;

(2) Heat dissipation capacity of the SCS shall be equal to or greater than the minimum necessary to ensure tha the peak cladding temperature is below 400 C (752 F) with an assumed ambient air temperature of 100 F.

(3) Heat exchangers, if used, shall be assumed to have all heat transfer surfaces fouled to the maximum limits specified in a widely used heat exchange equipment standard, such as the Standard of Tubular Exchanger Manufacturers Association;

(4) All passive components, such as tubular heat exchangers, manually operated valves and fittings shall be designed to applicable standards (TEMA, ANSI);

(5) All pressure boundaries (as defined in the ASME Boiler and Pressure Vessel Code, Section VIII Division 1) shall have pressure ratings that are greater than the maximum system operating pressure by at least 15 psig;

(6) All ASME Code components shall comply with Section VIII Division 1 of the ASME Boiler and Pressure Vessel Code;

(7) All gasketed and packed joints shall have a minimum design pressure rating of the maximum system pressure plus 15 psig (e.g. pump shut-off, if a pump is used);

(8) Any electric motors required to operate to provide adequate supplemental cooling shall have a backup power supply for uninterrupted operation;

(9) The system shall be capable of performing its intended function for 2 hours without operator action.

As noted in the Diablo Canyon ISFSI system thermal analysis (HI-2104625, Reference 5), if standing water is maintained in the MPC/HI-TRAC annulus space, the temperature of the MPC surface will be at the boiling temperature of water (~232 F), and the fuel cladding temperatures will be lower than the fuel cladding temperature limit of 752 F. As such, a keep full system could be used to meet the SCS requirements.

Since the SCS is not passive, PG&E received an exemption from 10 CFR 72.236(f) for its use. Additionally, the SCS is verified on a 2 hour frequency to ensure that it is operable when required. The accident for loss of SCS is discussed in Section 8.2.17.

10.2.3 MPC UNLOADING CHARACTERISTICS

In the event that an MPC must be unloaded, the transfer cask with its enclosed MPC is returned to the auxiliary building/fuel handling building to begin the process of fuel unloading. The MPC closure ring, and vent and drain port cover plates are then removed. The MPC gas is sampled to determine the integrity of the spent fuel cladding. The MPC is attached to the cool-down system. The cool-down system is a closed-loop forced ventilation gas cooling system that cools the fuel assemblies by cooling the surrounding helium gas inside the MPC.

During fuel cool-down, the MPC/transfer cask annular gap is reflooded with water to ensure adequate cooling capability is maintained. Once the fuel cool-down process is complete the MPC is reflooded with borated water and the MPC lid weld is removed leaving the MPC lid in place. The transfer cask and MPC are placed in the SFP and the MPC lid is removed. The contents are removed from the MPC and the MPC and transfer cask are removed from the SFP and decontaminated.

10.2.3.1 Gas Exit Temperature Of An MPC Prior To Reflooding

The integrity of the MPC depends on maintaining the internal cavity pressures within design limits. During the unloading process, reducing the fuel cladding temperatures significantly reduces the temperature gradients across the cladding, thus minimizing thermally-induced stresses on the cladding during MPC reflooding. In addition, reducing the MPC internal temperatures eliminates the risk of high MPC pressure due to sudden generation of steam during reflooding. This is accomplished by using the cool-down system that reduces the MPC internal temperatures such that there is no sudden formation of steam during MPC reflooding. Monitoring the circulating MPC gas exit temperature from the cool-down system ensures that there will be no large thermal gradient across the fuel assembly cladding during reflooding, which could be potentially harmful to the cladding. The exit gas temperature limit of ≤ 200°F ensures that the MPC gas exit temperature will closely match the desired fuel cladding temperature prior to reflooding the MPC. This temperature was selected to be lower than the boiling temperature of water with additional margin to eliminate the possibility of flashing to steam during reflooding.

During the fuel cool-down process, if the MPC helium gas exit temperature limit is not met, proceeding with reflooding shall be prohibited and actions must be taken to restore the parameters to within the limits before reflooding. In addition, while this parameter is being restored within limits, the proper conditions must be verified to exist for the transfer of heat from the MPC to the surrounding environs to ensure the fuel cladding remains below the short-term temperature limit. Maintaining the annular gap water level between the MPC and the transfer cask ensures that adequate cooling capability exits.

10.2.4 OTHER OPERATING CONTROLS AND LIMITS

None

10.2.5 LIMITING CONDITIONS FOR OPERATION

10.2.5.1 Equipment

All Diablo Canyon ISFSI equipment important to safety*, with the exception of SCS (see Section 10.2.2.7)* is passive in nature, therefore, there are no limiting conditions regarding minimum available equipment or operating characteristics. The MPC, transfer cask, CTF, and overpack have been analyzed for all credible equipment failure modes and extreme environmental conditions. No credible postulated event results in damage to fuel, release of radioactivity above acceptable limits, or danger to the public health and safety. All operational equipment is to be maintained, tested, and operated according to the implementing procedures developed for the ISFSI. The failure or unavailability of any operational equipment can delay the transfer of an MPC to the transfer cask or to the SFSC, but would not result in an unsafe condition.

10.2.5.2 Technical Conditions and Characteristics

The following technical conditions and characteristics are required for the Diablo Canyon ISFSI:

- Spent fuel characteristics
- SFSC heat removal capability
- MPC dissolved boron concentration level
- Annulus gap water requirement during ~~moisture removal for loading and~~ reflooding for unloading
- Water temperature of a flooded MPC
- ~~MPC vacuum pressures~~
- MPC recirculation gas exit temperature
- Helium purity
- MPC helium backfill pressures
- Gas exit temperature of an MPC prior to reflooding
- *Water temperature in annulus during SCS operation*

The spent fuel specifications for allowable content for storage in the ISFSI and their bases are detailed in Section 10.2.1. In addition, the spent fuel specifications are also contained in Diablo Canyon ISFSI TS Section 2.0. A description of bases for selecting the above remaining conditions and characteristics are detailed in Sections 10.2.2 through 10.2.4, with the exception of the heat removal capability, and dissolved boron concentration. These are provided in the Diablo Canyon ISFSI TS bases. Although provided in the above sections, the Diablo Canyon ISFSI TS and TS Bases also provide Limiting Conditions for Operations and bases for maintaining the integrity of the MPC during loading and unloading. These include ~~vacuum pressure,~~ recirculation gas temperature, backfill pressure, and leak rate during loading, ~~and~~ exit gas temperature during unloading*, and SCS operation during loading and unloading*.

The technical and operational considerations are to:

- Ensure proper internal MPC atmosphere to promote heat transfer, minimize oxidation, and prevent an uncontrolled release of radioactive material.

- Ensure that dose rates in areas where operators must work are ALARA and that all relevant dose limits are met.

- Ensure that the fuel cladding is maintained at a temperature sufficiently low to preclude cladding degradation during normal storage conditions.

Through the analyses and evaluations provided in Chapters 4, 7, and 8, this FSAR demonstrates that the above technical conditions and characteristics are adequate and that no significant public or occupational health and safety hazards exist.

10.2.6 SURVEILLANCE REQUIREMENTS

The analyses provided in this FSAR show that the Diablo Canyon ISFSI and the storage system fulfill its safety functions during all accident conditions as described in Chapter 8. Surveillance requirements are provided in the Diablo Canyon ISFSI TS. No continuous surveillance of the MPC is required during long-term storage. Surveillance of the SFSC duct screens is in the Diablo Canyon ISFSI TS and ensures freedom of air movement and adequate heat dissipation during long-term storage.

10.2.7 DESIGN FEATURES

The following storage system design features are important to the safe operation of the Diablo Canyon ISFSI and require design controls and limits:

- Material mechanical properties for structural integrity confinement and shielding

- Material composition and dimensional control for subcriticality

- Decay heat removal

Component dimensions are not specified here since the combination of materials, dose rates, criticality safety, and component fit-up define the operable limits for dimensions (that is, thickness of shielding materials, thickness of concrete, MPC plate thicknesses, etc.) The values for these design parameters are specified in the HI-STORM 100 System FSAR (Reference 1). Changes to any of these design features will be implemented only after conducting a safety evaluation in accordance with 10 CFR 72.48.

The combination of the above controls and limits and those discussed previously in Section 10.2 define requirements for the Diablo Canyon ISFSI storage system components that provide radiological protection and structural integrity during normal storage and postulated accident conditions.

10.2.8 ADMINISTRATIVE CONTROLS

Use of the existing DCPP organizational and administrative systems and procedures, record keeping, review, audit, and reporting requirements coupled with the requirements of this FSAR ensure that the operations involved in the storage of spent fuel at the ISFSI are performed in a safe manner. This includes both the selection of assemblies qualified for ISFSI storage and the verification of assembly identification numbers prior to and after placement into individual MPCs. The spent fuel qualification, identification, and control are discussed in Sections 10.2.1 through 10.2.4 above. Other administrative programs will control revisions to the Diablo Canyon ISFSI TS Bases; radioactive effluents; fuel-cladding-oxide thickness; MPC loading and unloading processes; ISFSI operations, and transportation route conditions. These other programs are defined in the Diablo Canyon ISFSI TS.

10.2.9 OPERATING CONTROL AND LIMIT SPECIFICATIONS

The operating controls and limits applicable to the Diablo Canyon ISFSI, as documented in this FSAR, are delineated in the Diablo Canyon ISFSI TS and the TS Bases. These include:

- MPC dryness, backfill pressure and leak rate limitations
- SFSC heat removal capability
- Fuel Cool-Down exit gas temperature limitation
- Dissolved boron concentration

10.2.10 REFERENCES

Detailed information describing the HI-STORM 100 System is provided in the following two references, which must be used together:

1. Final Safety Analysis Report for HI-STORM 100 System, Revision 1A, January 2003.

2. Deleted in Revision 2.

3. Interim Staff Guidance Document 11 (ISG-11), Revision 3, Cladding Considerations for the Transportation and Storage of Spent Fuel, NRC, November 17, 2003.

4. 10 CFR 72 Certificate of Compliance No. 1014 for the HI-STORM 100 System, Holtec International, Amendment 3, May 29, 2007.

5. *Holtec International Document No. HI-2104625, "Three Dimensional Thermal-Hydraulic Analyses for Diablo Canyon Site-Specific HI-STORM System Design", Revision 2.*

Reference 1 contains information related to MPC-32, MPC-24, MPC-24E, MPC-24EF, and the HI-STORM 100SA. General references to these documents are made in Chapter 10 as needed to supplement FSAR information.

TABLE 10.2-1

MPC-24 FUEL ASSEMBLY LIMITS

A. Allowable Contents

1. Uranium oxide, intact fuel assemblies listed in Table 10.2-5, with or without nonfuel hardware and meeting the following specifications (Note 1):

Cladding type	Zr (Note 2)
Initial enrichment	As specified in Table 10.2-5 for the applicable fuel assembly.
Post-irradiation cooling time and average burnup per assembly:	
Fuel	As specified in Tables 10.2-6 or 10.2-8.
Nonfuel hardware	As specified in Table 10.2-10.
Decay heat per assembly	As specified in Tables 10.2-7 or 10.2-9.
Fuel assembly length	≤ 176.8 inches (nominal design)
Fuel assembly width	≤ 8.54 inches (nominal design)
Fuel assembly weight	≤ 1,680 lb (including nonfuel hardware)

B. Quantity per MPC: Up to 24 fuel assemblies.

C. Damaged fuel assemblies and fuel debris are not authorized for loading into the MPC-24.

D. One NSA is authorized for loading in an MPC-24.

Note 1: Fuel assemblies containing BPRAs, WABAs, or TPDs may be stored in any fuel cell location. Fuel assemblies containing RCCAs *or NSAs* may only be loaded in fuel storage locations 9, 10, 15, and/or 16 of Figure 10.2-1. These requirements are in addition to any other requirements specified for uniform or regionalized fuel loading.

Note 2: Zr designates fuel-cladding material, which is made of Zircaloy-2, Zircaloy-4 and ZIRLO.

TABLE 10.2-2

MPC-24E FUEL ASSEMBLY LIMITS

A. Allowable Contents

1. Uranium oxide, intact fuel assemblies listed in Table 10.2-5, with or without nonfuel hardware and meeting the following specifications (Note 1):

Cladding type	Zr (Note 2)
Initial enrichment	As specified in Table 10.2-5 for the applicable fuel assembly.
Post-irradiation cooling time and average burnup per assembly	
Fuel	As specified in Tables 10.2-6 or 10.2-8.
Nonfuel hardware	As specified in Table 10.2-10.
Decay heat per assembly	As specified in Tables 10.2-7 or 10.2-9.
Fuel assembly length	≤ 176.8 inches (nominal design)
Fuel assembly width	≤ 8.54 inches (nominal design)
Fuel assembly weight	≤ 1,680 lb (including nonfuel hardware)

2. Uranium oxide, damaged fuel assemblies, with or without nonfuel hardware, placed in damaged fuel containers. Uranium oxide damaged fuel assemblies shall meet the criteria specified in Table 10.2-5 and meet the following specifications (Note 1):

Cladding type	Zr (Note 2)
Initial enrichment	≤ 4.0 wt% ^{235}U.
Post-irradiation cooling time and average burnup per assembly:	
Fuel	As specified in Tables 10.2-6 or 10.2-8.
Nonfuel hardware	As specified in Table 10.2-10.
Decay heat per assembly	As specified in Tables 10.2-7 or 10.2-9.
Fuel assembly length	≤ 176.8 inches (nominal design)
Fuel assembly width	≤ 8.54 inches (nominal design)
Fuel assembly weight	≤ 1,680 lb (including nonfuel hardware and DFC)

TABLE 10.2-2

B. Quantity per MPC: Up to four (4) damaged fuel assemblies in damaged fuel containers, stored in fuel storage locations 3, 6, 19 and/or 22 of Figure 10.2-2. The remaining MPC-24E fuel storage locations may be filled with intact fuel assemblies meeting the applicable specifications.

C. Fuel debris is not authorized for loading in the MPC-24E.

D. One NSA is authorized for loading in an MPC-24E.

Note 1: Fuel assemblies containing BPRAs, WABAs, or TPDs may be stored in any fuel storage location. Fuel assemblies containing RCCAs *or NSAs* must be loaded in fuel storage locations 9, 10, 15 and/or 16 of Figure 10.2-2. These requirements are in addition to any other requirements specified for uniform or regionalized fuel loading.

Note 2: Zr designates fuel-cladding material, which is made of Zircaloy-2, Zircaloy-4 and ZIRLO.

TABLE 10.2-3

MPC-24EF FUEL ASSEMBLY LIMITS

A. Allowable Contents

1. Uranium oxide, intact fuel assemblies listed in Table 10.2-5, with or without nonfuel hardware and meeting the following specifications (Note 1):

Cladding type	Zr (Note 3)
Initial enrichment	As specified in Table 10.2-5 for the applicable fuel assembly.
Post-irradiation cooling time and average burnup per assembly:	
Fuel	As specified in Tables 10.2-6 or 10.2-8.
Nonfuel hardware	As specified in Table 10.2-10.
Decay heat per assembly	As specified in Tables 10.2-7 or 10.2-9.
Fuel assembly length	≤ 176.8 inches (nominal design)
Fuel assembly width	≤ 8.54 inches (nominal design)
Fuel assembly weight	≤ 1,680 lb (including nonfuel hardware)

2. Uranium oxide, damaged fuel assemblies and fuel debris, with or without nonfuel hardware, placed in damaged fuel containers. Uranium oxide damaged fuel assemblies shall meet the criteria specified in Table 10.2-5 and meet the following specifications (Note 1 and 2):

Cladding type	Zr (Note 3)
Initial enrichment	≤ 4.0 wt% ^{235}U.
Post-irradiation cooling time and average burnup per assembly	
Fuel	As specified in Tables 10.2-6 or 10.2-8.
Nonfuel hardware	As specified in Table 10.2-10.
Decay heat per assembly	As specified in Tables 10.2-7 or 10.2-9.
Fuel assembly length	≤ 176.8 inches (nominal design)
Fuel assembly width	≤ 8.54 inches (nominal design)
Fuel assembly weight	≤ 1,680 lb (including nonfuel hardware and DFC)

TABLE 10.2-3

~~B.~~*A.* Quantity per MPC: Up to four (4) damaged fuel assemblies and/or fuel debris in damaged fuel containers, stored in fuel storage locations 3, 6, 19 and/or 22 of Figure 10.2-2. The remaining MPC-24EF fuel storage locations may be filled with intact fuel assemblies meeting the applicable specifications.

B. One NSA is authorized for loading in an MPC-24EF.

Note 1: Fuel assemblies containing BPRAs, WABAs, or TPDs may be stored in any fuel storage location. Fuel assemblies containing RCCAs *or NSAs* must be loaded in fuel storage locations 9, 10, 15 and/or 16 of Figure 10.2-2. These requirements are in addition to any other requirements specified for uniform or regionalized fuel loading.

Note 2: The total quantity of fuel debris permitted in a single damaged fuel container is limited to the equivalent weight and special nuclear material quantity of one intact fuel assembly.

Note 3: Zr designates fuel-cladding material, which is made of Zircaloy-2, Zircaloy-4, and ZIRLO.

TABLE 10.2-4

MPC-32 FUEL ASSEMBLY LIMITS

A. Allowable Contents

1. Uranium oxide, intact fuel assemblies listed in Table 10.2-5, with or without nonfuel hardware and meeting the following specifications (Note 1):

Cladding type	Zr (Note 2)
Initial enrichment	As specified in Table 10.2-5 for the applicable fuel assembly.
Post-irradiation cooling time and average burnup per assembly:	
Fuel	As specified in Tables 10.2-6 or 10.2-8*, or Section 10.2.1.2.1*.
Nonfuel hardware	As specified in Table 10.2-10.
Decay heat per assembly	As specified in Tables 10.2-7 or 10.2-9.
Fuel assembly length	≤ 176.8 inches (nominal design)
Fuel assembly width	≤ 8.54 inches (nominal design)
Fuel assembly weight	≤ 1,680 lb (including nonfuel hardware)

B. Quantity per MPC: Up to 32 intact fuel assemblies.

C. Damaged fuel assemblies and fuel debris are not authorized for loading in the MPC-32.

D. One NSA is authorized for loading in an MPC -32.

Note 1: Fuel assemblies containing BPRAs, WABAs, or TPDs *with or without ITTRs,* may be stored in any fuel storage location. Fuel assemblies *with or without ITTRs,* containing RCCAs *or NSAs* must be loaded in fuel storage locations 13, 14, 19 and/or 20 of Figure 10.2-3. These requirements are in addition to any other requirements specified for uniform or regionalized fuel loading.

Note 2: Zr designates fuel-cladding material, which is made of Zircaloy-2, Zircaloy-4 and ZIRLO.

TABLE 10.2-5

FUEL ASSEMBLY CHARACTERISTICS (Note 1)

Fuel Assembly Type *(Note 6)*	Vantage 5	Standard or LOPAR
Cladding Material	Zr (Note 5)	Zr (Note 5)
Design Initial U (kg/assy.) (Note 2)	≤ 467	≤ 467
Initial Enrichment (MPC-24, 24E, and 24EF without soluble boron credit) (wt% ^{235}U) (Note 4)	≤ 4.0 (24) ≤ 4.4 (24E/24EF)	≤ 4.0 (24) ≤ 4.4 (24E/24EF)
Initial Enrichment (MPC-24, 24E, 24EF, or 32 with soluble boron credit) (wt% ^{235}U) (Notes 3 and 4)	≤ 5.0	≤ 5.0
No. of Fuel Rod Locations	264	264
Fuel Rod Cladding O.D. (in.)	≥ 0.360	≥ 0.372
Fuel Rod Cladding I.D. (in.)	≤ 0.3150	≤ 0.3310
Fuel Pellet Dia. (in.)	≤ 0.3088	≤ 0.3232
Fuel Rod Pitch (in.)	≤ 0.496	≤ 0.496
Active Fuel Length (in.)	≤ 150	≤ 150
No. of Guide and/or Instrument Tubes	25	25
Guide/Instrument Tube Thickness (in.)	≥ 0.016	≥ 0.014

Note 1: All dimensions are design nominal values. Maximum and minimum dimensions are specified to bound variations in design nominal values among fuel assemblies.

Note 2: Design initial uranium weight is the nominal uranium weight specified for each assembly by the fuel manufacturer or DCPP. For each fuel assembly, the total uranium weight limit specified in this table may be increased up to 2.0 percent for comparison with DCPP fuel records to account for manufacturers tolerances.

Note 3: Soluble boron concentration per Technical Specification LCO 3.2.1.

Note 4: For those MPCs loaded with both intact fuel assemblies and damaged fuel assemblies or fuel debris, the maximum initial enrichment of the intact fuel assemblies is limited to the maximum initial enrichment of the damaged fuel assemblies and fuel debris (i.e., 4.0 wt.% ^{235}U).

Note 5: Zr designates fuel-cladding material, which is made of Zircaloy-2, Zircaloy-4 and ZIRLO.

NOTE 6: Fuel assemblies meeting the characteristics may be loaded under the requirements for the listed Fuel Assembly Type, even if the name is different

TABLE 10.2-6

FUEL ASSEMBLY COOLING AND MAXIMUM AVERAGE BURNUP
(UNIFORM FUEL LOADING)

Post-Irradiation Cooling Time (years)	MPC-24 Assembly Burnup (Intact Fuel Assemblies) (MWD/MTU)	MPC-24E/24EF Assembly Burnup (Intact Fuel Assemblies) (MWD/MTU)	MPC-24E/24EF Assembly Burnup (Damaged Fuel Assemblies and Fuel Debris) (MWD/MTU)	MPC-32 Assembly Burnup (Intact Fuel Assemblies) (MWD/MTU) *(Note 2)*
≥ 5	40,600	41,100	39,200	32,200
≥ 6	45,000	45,000	43,700	36,500
≥ 7	-	-	44,500	37,500
≥ 8	-	-	-	39,900
≥ 9	-	-	-	41,500
≥ 10	-	-	-	42,900
≥ 11	-	-	-	44,100
≥ 12	-	-	-	45,000
≥ 13	-	-	-	-
≥ 14	-	-	-	-
≥ 15	-	-	-	-

Note 1: Linear interpolation between points is permitted.

Note 2: Burnup *limits* for fuel assemblies ~~with cladding made of ZIRLO is limited to 45,000 MWD/MTU or the value in this table, whichever is less~~*in an MPC-32 may alternatively be calculated using 10.2.1.2.1*.

TABLE 10.2-7

FUEL ASSEMBLY COOLING AND MAXIMUM DECAY HEAT
(UNIFORM FUEL LOADING)

Post-Irradiation Cooling Time (years)	MPC-24 Assembly Decay Heat (Intact Fuel Assemblies) (Watts)	MPC-24E/24EF Assembly Decay Heat (Intact Fuel Assemblies) (Watts)	MPC-24E/24EF Assembly Decay Heat (Damaged Fuel Assemblies and Fuel Debris) (Watts)	MPC-32 Assembly Decay Heat (Intact Fuel Assemblies) (Watts)
≥ 5	1157	1173	1115	898
≥ 6	1123	1138	1081	~~873~~*898*
≥ 7	1030	1043	991	~~805~~*898*
≥ 8	1020	1033	981	~~800~~*898*
≥ 9	1010	1023	972	~~794~~*898*
≥ 10	1000	1012	962	~~789~~*898*
≥ 11	996	1008	958	~~785~~*898*
≥ 12	992	1004	954	~~782~~*898*
≥ 13	987	999	949	~~773~~*898*
≥ 14	983	995	945	~~769~~*898*
≥ 15	979	991	941	~~766~~*898*

Note 1: Linear interpolation between points is permitted.

Note 2: Includes all sources of heat (i.e., fuel and nonfuel hardware).

TABLE 10.2-8

FUEL ASSEMBLY COOLING AND MAXIMUM AVERAGE BURNUP
(REGIONALIZED FUEL LOADING)

Post-Irradiation Cooling Time (years)	MPC-24 Assembly Burnup for Region 1 (MWD/MTU)	MPC-24 Assembly Burnup for Region 2 (MWD/MTU)	MPC-24E/24EF Assembly Burnup for Region 1 (MWD/MTU)	MPC-24E/24EF Assembly Burnup for Region 2 (MWD/MTU)	MPC-32 Assembly Burnup for Region 1 (MWD/MTU) *(Note 3)*	MPC-32 Assembly Burnup for Region 2 (MWD/MTU) *(Note 3)*
≥ 5	45,000	32,200	45,000	32,200	39,800	22,100
≥ 6	-	37,400	-	37,400	43,400	26,200
≥ 7	-	41,100	-	41,100	44,500	29,100
≥ 8	-	43,800	-	43,800	45,000	31,200
≥ 9	-	45,000	-	45,000	-	32,700
≥ 10	-	-	-	-	-	34,100
≥ 11	-	-	-	-	-	35,200
≥ 12	-	-	-	-	-	36,200
≥ 13	-	-	-	-	-	37,000
≥ 14	-	-	-	-	-	37,800
≥ 15	-	-	-	-	-	38,600
≥ 16	-	-	-	-	-	39,400
≥ 17	-	-	-	-	-	40,200
≥ 18	-	-	-	-	-	40,800
≥ 19	-	-	-	-	-	41,500
≥ 20	-	-	-	-	-	42,200

Note 1: Linear interpolation between points is permitted.
Note 2: These limits apply to intact fuel assemblies, damaged fuel assemblies, and fuel debris.
Note 3: Burnup *limits* for fuel assemblies ~~with cladding made of ZIRLO is limited to 45,000 MWD/MTU or the value in this table, whichever is less~~*in an MPC-32 may alternatively be calculated per 10.2.1.2.1*.

TABLE 10.2-9

FUEL ASSEMBLY COOLING AND MAXIMUM DECAY HEAT
(REGIONALIZED FUEL LOADING)

Post-Irradiation Cooling Time (years)	MPC-24 Assembly Decay Heat for Region 1 (Watts)	MPC-24 Assembly Decay Heat for Region 2 (Watts)	MPC-24E/24EF Assembly Decay Heat for Region 1 (Watts)	MPC-24E/24EF Assembly Decay Heat for Region 2 (Watts)	MPC-32 Assembly Decay Heat for Region 1 (Watts)	MPC-32 Assembly Decay Heat for Region 2 (Watts)
≥ 5	1470	900	1540	900	1131	600
≥ 6	1470	900	1540	900	~~1072~~*1131*	600
≥ 7	1335	900	1395	900	~~993~~*1131*	600
≥ 8	1301	900	1360	900	~~978~~*1131*	600
≥ 9	1268	900	1325	900	~~964~~*1131*	600
≥ 10	1235	900	1290	900	~~950~~*1131*	600
≥ 11	1221	900	1275	900	~~943~~*1131*	600
≥ 12	1207	900	1260	900	~~937~~*1131*	600
≥ 13	1193	900	1245	900	~~931~~*1131*	600
≥ 14	1179	900	1230	900	~~924~~*1131*	600
≥ 15	1165	900	1215	900	~~918~~*1131*	600
≥ 16	-	-	-	-	-	-
≥ 17	-	-	-	-	-	-
≥ 18	-	-	-	-	-	-
≥ 19	-	-	-	-	-	-
≥ 20	-	-	-	-	-	-

Note 1: Linear interpolation between points is permitted.
Note 2: Includes all sources of decay heat (i.e., fuel and nonfuel hardware).
Note 3: These limits apply to intact fuel assemblies, damaged fuel assemblies, and fuel debris.

TABLE 10.2-10

NONFUEL HARDWARE COOLING AND AVERAGE ACTIVATION

Post-Irradiation Cooling Time (years)	BPRA and WABA Burnup (MWD/MTU)	TPD *and NSA* Burnup (MWD/MTU)	RCCA Burnup (MWD/MTU)
≥3	≤20,000	NA	NA
≥4	≤25,000	≤20,000	NA
≥5	≤30,000NA	≤25,000	≤630,000
≥6	≤40,000	≤30,000	
≥7	≤45,000	≤40,000	
≥8	≤50,000	≤45,000	
≥9	≤60,000	≤50,000	
≥10		≤60,000	
≥11		≤75,000	
≥12		≤90,000	
≥13		≤180,000	
≥14		≤630,000	

Note 1: Linear interpolation between points is permitted, except that TPD *and NSA* burnups > 180,000 MWD/MTU and ≤630,000 MWD/MTU must be cooled ≥ 14 years.

Note 2: Applicable to uniform loading and regionalized loading.

Note 3: NA means not authorized for loading.

NOTE 4: Non-fuel hardware burnup and cooling times are not applicable to ITTRs since they are installed post-irradiation.

NOTE 5: Only one NSA is authorized for loading in any MPC.

Table 10.2-11 (page 1 of 2)

Fuel Assembly Time-Dependent Coefficients

Cooling Time (years)	Vantage 5 fuel						
	A	B	C	D	E	F	G
≥ 5	40315.9	-9724	1622.89	-140.459	3170.28	-547.749	425.136
≥ 6	49378.5	-15653.1	3029.25	-164.712	3532.55	-628.93	842.73
≥ 7	56759.5	-21320.4	4598.78	-190.58	3873.21	-698.143	975.46
≥ 8	63153.4	-26463.8	6102.47	-201.262	4021.84	-685.431	848.497
≥ 9	67874.9	-30519.2	7442.84	-218.184	4287.23	-754.597	723.305
≥ 10	72676.8	-34855.2	8928.27	-222.423	4382.07	-741.243	387.877
≥ 11	75623	-37457.1	9927.65	-232.962	4564.55	-792.051	388.402
≥ 12	80141.8	-41736.5	11509.8	-232.944	4624.72	-787.134	-164.727
≥ 13	83587.5	-45016.4	12800.9	-230.643	4623.2	-745.177	-428.635
≥ 14	86311.3	-47443.4	13815.2	-228.162	4638.89	-729.425	-561.758
≥ 15	87839.2	-48704.1	14500.3	-231.979	4747.67	-775.801	-441.959
≥ 16	91190.5	-51877.4	15813.2	-225.768	4692.45	-719.311	-756.537
≥ 17	94512	-55201.2	17306.1	-224.328	4740.86	-747.11	-1129.15
≥ 18	96959	-57459.9	18403.8	-220.038	4721.02	-726.928	-1272.47
≥ 19	99061.1	-59172.1	19253.1	-214.045	4663.37	-679.362	-1309.88
≥ 20	100305	-59997.5	19841.1	-216.112	4721.71	-705.463	-1148.45

Table 10.2-11 (page 2 of 2)

Fuel Assembly Time-Dependent Coefficients

Cooling Time (years)	Standard or LOPAR fuel						
	A	B	C	D	E	F	G
≥ 5	36190.4	-7783.2	1186.37	-130.008	2769.53	-438.716	519.95
≥ 6	44159	-12517.5	2209.54	-150.234	3042.25	-489.858	924.151
≥ 7	50399.6	-16780.6	3277.26	-173.223	3336.58	-555.743	1129.66
≥ 8	55453.9	-20420	4259.68	-189.355	3531.65	-581.917	1105.62
≥ 9	59469.3	-23459.8	5176.62	-199.63	3709.99	-626.667	1028.74
≥ 10	63200.5	-26319.6	6047.8	-203.233	3783.02	-619.949	805.311
≥ 11	65636.3	-28258.3	6757.23	-214.247	3972.8	-688.56	843.457
≥ 12	68989.7	-30904.4	7626.53	-212.539	3995.62	-678.037	495.032
≥ 13	71616.6	-32962.2	8360.45	-210.386	4009.11	-666.542	317.009
≥ 14	73923.9	-34748	9037.75	-207.668	4020.13	-662.692	183.086
≥ 15	76131.8	-36422.3	9692.32	-203.428	4014.55	-655.981	47.5234
≥ 16	77376.5	-37224.7	10111.4	-207.581	4110.76	-703.37	161.128
≥ 17	80294.9	-39675.9	11065.9	-201.194	4079.24	-691.636	-173.782
≥ 18	82219.8	-41064.8	11672.1	-195.431	4043.83	-675.432	-286.059
≥ 19	84168.9	-42503.6	12309.4	-190.602	4008.19	-656.192	-372.411
≥ 20	86074.2	-43854.4	12935.9	-185.767	3985.57	-656.72	-475.953

HOLTEC
INTERNATIONAL

Holtec Center, 555 Lincoln Drive West, Marlton, NJ 08053
Telephone (856) 797- 0900
Fax (856) 797 - 0909

DOSE EVALUATION FOR THE ISFSI AT DIABLO CANYON POWER STATION

FOR

Pacific Gas and Electric Company

Holtec Report No: HI-2002563

Holtec Project No: 1073

Report Class : SAFETY RELATED

HOLTEC INTERNATIONAL

DOCUMENT ISSUANCE AND REVISION STATUS[1]

DOCUMENT NAME:	DOSE EVALUATION FOR THE ISFSI AT DIABLO CANYON POWER STATION		
DOCUMENT NO.:	HI-2002563	CATEGORY: ☐	GENERIC
PROJECT NO.:	1073	☑	PROJECT SPECIFIC

Rev. No.[2]	Date Approved	Author's Initials	VIR #
8	11/19/2010	K.Banerjee	220578

DOCUMENT CATEGORIZATION

In accordance with the Holtec Quality Assurance Manual and associated Holtec Quality Procedures (HQPs), this document is categorized as a:

☑ Calculation Package[3] (Per HQP 3.2)

☐ Technical Report (Per HQP 3.2) (Such as a Licensing Report)

☐ Design Criterion Document (Per HQP 3.4)

☐ Design Specification (Per HQP 3.4)

☐ Other (Specify):

DOCUMENT FORMATTING

The formatting of the contents of this document is in accordance with the instructions of HQP 3.2 or 3.4 except as noted below:

DECLARATION OF PROPRIETARY STATUS

☒ Nonproprietary ☐ Holtec Proprietary ☐ Privileged Intellectual Property (PIP)

This document contains extremely valuable intellectual property of Holtec International. Holtec's rights to the ideas, methods, models, and precepts described in this document are protected against unauthorized use, in whole or in part, by any other party under the U.S. and international intellectual property laws. Unauthorized dissemination of any part of this document by the recipient will be deemed to constitute a willful breach of contract governing this project. The recipient of this document bears sole responsibility to honor Holtec's unabridged ownership rights of this document, to observe its confidentiality, and to limit use to the purpose for which it was delivered to the recipient. Portions of this document may be subject to copyright protection against unauthorized reproduction by a third party.

Notes

1. This document has been subjected to review, verification and approval process set forth in the Holtec Quality Assurance Procedures Manual. Password controlled signatures of Holtec personnel who participated in the preparation, review, and QA validation of this document are saved on the company's network. The Validation Identifier Record (VIR) number is a random number that is generated by the computer after the specific revision of this document has undergone the required review and approval process, and the appropriate Holtec personnel have recorded their password-controlled electronic concurrence to the document.

2. A revision to this document will be ordered by the Project Manager and carried out if any of its contents is materially affected during evolution of this project. The determination as to the need for revision will be made by the Project Manager with input from others, as deemed necessary by him.

3. Revisions to this document may be made by adding supplements to the document and replacing the "Table of Contents", this page and the "Revision Log".

Summary of Revisions

Revision 0

Original Issue

Revision 1

1. All changes noted with revision bars.
2. Added Section 1.2 in accordance with Holtec administrative memos. The introduction from Revision 0 has been moved into Section 1.1.
3. Made changes per PG&E comments.
4. A footnote was added to the reference section in accordance with Holtec administrative memos.
5. Four was changed to three in Figure 2 caption.
6. The table of contents was changed appropriately.

Revision 2

1. All changes noted with revision bars. Revision bars from rev 1 have been removed.
2. Fixed an incorrect reference to a section.
3. Removed a paragraph discussing analysis of the dose at the nuisance fence behind and on the sides of the array. This analysis is not contained in the appendices that were referenced.

Revision 3

1. The HI-STORM 100S drawings were updated to include design changes. The significant change from the perspective of this report was the removal of the inner shield shell and the increase in the concrete density of the body to compensate. The lid design was also changed to include the shear bar as part of the lid design. This affected the calculation of the dose from a HI-STORM without a lid. All analyses of the HI-STORM 100S in this report were updated accordingly. In some cases the previous models of the overpacks were used but justification is appropriately provided.
2. Revision bars mark all revisions to text. The following pages of results were completely replaced: A2-A9, D4-D7, E2-E14, F3-F11, G3-G14, H5-H14, I2, K2-K11, L5-L7, M19-M21.

Revision 4

1. Appendix N was added to discuss the determination of the allowable burnup and cooling times for the BPRAs and TPDs.
2. The approved computer code list in Attachment A was updated to show the report number in the footer and the version of the code used.

Revision 5

1. The duration for step 47 during loading operations in App. K and step 19 during unloading operations in App. K was increased from 1.5 hours (90 minutes) to 3.0 hours (180 minutes). This resulted in a change to the total dose rates in App. K.

Revision 6

1. Appendix O was added to discuss the effect on shielding of changing the HI-STORM, HI-TRAC and MPC designs.

Revision 7

1. Appendix P is added to discuss site boundary dose rates for high burnup fuels to support a license amendment to the Diablo Canyon ISFSI.
2. Storage of ITTRs and neutron sources are also discussed in Appendix P.

Revision 8

1. Revised to incorporate client's comments.

Table of Contents

1. Introduction 3
   1.1 Statement of Purpose 3
   1.2 About This Document 3
2. General Methodology 5
3. Acceptance Criteria 5
4. Assumptions 6
5. Input Data 8
   5.1 ISFSI Geometry 9
6. Computer Codes 9
7. Analysis and Results 10
   7.1 Source Terms 10
   7.2 MCNP Modeling of the MPC, HI-STORM Overpack, and 125-ton HI-TRAC Transfer Cask 10
   7.3 Method of Tallying 11
   7.4 Choice of Design Basis Burnup and Cooling Time 11
   7.5 Dose Calculations for the HI-STORM 100S on the ISFSI 12
      7.5.1 MCNP Surface Source Calculations 12
      7.5.2 Dose Rates Adjacent to the Overpack 13
      7.5.3 Cask Configurations for Dose Versus Distance Calculations 13
      7.5.4 Final Dose Rate Calculations 15
   7.6 Dose Rates from the HI-STORM 100S Without a Lid 15
   7.7 Dose Rates from the 125-ton HI-TRAC Transfer Cask 16
      7.7.1 Normal Conditions 16
      7.7.2 Accident Conditions 17
   7.8 Doses During Loading and Unloading Operations 18
8. Computer Files 18
9. Summary 24
10. References 29
   10.1 Drawings 30

Appendix A: Bounding Burnup and Cooling Time for HI-STORM A-1
Appendix B: Bounding Burnup and Cooling Time for the 125-ton HI-TRAC B-1
Appendix C: Source Terms C-1
Appendix D: Near Dose Rates for HI-STORM Overpack D-1
Appendix E: Single Cask Dose Rates Versus Distance E-1
Appendix F: Results of Various Overpack Configuration Analyses F-1
Appendix G: Final ISFSI Dose Rate Calculations G-1
Appendix H: Annual Personnel Doses from ISFSI Operations H-1
Appendix I: Dose Rates from a HI-STORM 100S Without a Lid I-1
Appendix J: Dose Rates from the 125-ton HI-TRAC Transfer Cask J-1
Appendix K: Occupational Exposures During Loading and Unloading Operations K-1
Appendix L: Effect of Air Composition on Dose Calculations L-1
Appendix M: Comparison of B&W 15x15 and W 17x17 Assemblies M-1
Appendix N: Allowable Burnup and Cooling Times for BPRAs and TPDs N-1
Appendix O: Design Changes and Justification O-1

Appendix P: Site Boundary Dose Calculations for High Burnup Fuels P-2
Attachment A: List of Approved Computer Codes (4 pages)

1. Introduction

1.1 Statement of Purpose

This report documents the radiation shielding analysis that was performed for the Independent Spent Fuel Storage Installation (ISFSI) at Diablo Canyon Power Plant (DCPP). This shielding analysis includes calculation of the dose rates from the HI-STORM 100S overpack on the ISFSI and in the Cask Transfer Facility (CTF), the 125-ton HI-TRAC transfer cask, and the entire ISFSI filled with HI-STORM 100S overpacks. Occupational exposures during loading and unloading operations of a HI-STORM 100S overpack and maintenance and surveillance operations around the ISFSI are estimated in this report. This report also addresses the radiation consequences of a lead slump in the 125-ton HI-TRAC resulting from a drop accident. This report only considers the direct radiation source emanating off the sides and top of the overpack and the sides, top, and bottom of the transfer cask. Since the MPC is seal welded there is no effluent release of radiation. However, the current NRC regulations require the calculation of the off-site dose rate associated with normal, off-normal, and accident effluent release of radiation. These calculations are performed in reference [8] and are summarized in this report in Section 9.

In its fully implemented final configuration, this facility will consist of 140 HI-STORM 100S casks loaded with the MPC-24 or MPC-32. Up to seven ISFSI pads may be constructed with each pad able to store a 4x5 array of casks [12]. At the completion of the ISFSI, the casks would be in a 5x28 configuration. The center to center pitch between HI-STORM casks is 17 feet [12]. The pads will be constructed in such a manner as to maintain the 17 foot pitch between casks on adjacent pads. Dose rates from the cask array are calculated as a function of distance. Distances include relevant onsite and offsite dose locations. For offsite dose rates, the results presented in this report must be added to the dose rates from other Uranium Fuel Cycle operations to determine whether the regulatory requirements for normal (10CFR72.104) conditions are met.

1.2 About This Document

This work product has been labeled a safety-significant document in Holtec's QA System. In order to gain acceptance as a safety-significant document in the company's quality assurance system, this document is required to undergo a prescribed review and concurrence process that requires the preparer and reviewer(s) of the document to answer a long list of questions crafted to ensure that the document has been purged of all errors of any material significance. A record of the review and verification activities is maintained in electronic form within the company's network to enable future retrieval and recapitulation of the programmatic acceptance process leading to the acceptance and release of this document under the company's QA system. Among the numerous requirements that a document of this genre must fulfill to muster approval within the company's QA program are:

- The preparer(s) and reviewer(s) are technically qualified to perform their activities per the applicable Holtec Quality Procedure (HQP).
- The input information utilized in the work effort must be drawn from referenceable sources. Any assumed input data is so identified.
- All significant assumptions, as applicable, are stated.
- The analysis methodology, if utilized, is consistent with the physics of the problem.
- Any computer code and its specific versions that may be used in this work has been formally admitted for use within the company's QA system.
- The format and content of the document is in accordance with the applicable Holtec quality procedure.
- The material content of this document is understandable to a reader with the requisite academic training and experience in the underlying technical disciplines.

Once a safety significant document produced under the company's QA System completes its review and certification cycle, it should be free of any materially significant error and should not require a revision unless its scope of treatment needs to be altered. Except for regulatory interface documents (i.e., those that are submitted to the NRC in support of a license amendment and request), revisions to Holtec *safety-significant* documents to amend grammar, to improve diction, or to add trivial calculations are made only if such editorial changes are warranted to prevent erroneous conclusions from being inferred by the reader. In other words, the focus in the preparation of this document is to ensure accuracy of the technical content rather than the cosmetics of presentation.

In accordance with the foregoing, this Calculation Package has been prepared pursuant to the provisions of Holtec Quality Procedures HQP 3.0 and 3.2, which require that all analyses utilized in support of the design of a safety-related or important-to-safety structure, component, or system be fully documented such that the analyses can be reproduced at *any time in the future* by a specialist trained in the discipline(s) involved. HQP 3.2 sets down a rigid format structure for the content and organization of Calculation Packages that are intended to create a document that is complete in terms of the exhaustiveness of content. The Calculation Packages, however, lack the narrational smoothness of a Technical Report, and are not intended to serve as a Technical Report.

Because of its function as a repository of all analyses performed on the subject of its scope, this document will require a revision only if an error is discovered in the computations or the equipment design is modified. Additional analyses in the future may be added as numbered supplements to this Package. Each time a supplement is added or the existing material is revised, the revision status of this Package is advanced to the next number and the Table of Contents is amended. Calculation Packages are Holtec proprietary documents. They are shared with a client only under strict controls on their use and dissemination.

This Calculation Package will be saved as a Permanent Record under the company's QA System.

2. General Methodology

The analysis of the 140 cask ISFSI can be separated into two distinct parts. The first is the generation of the radiation source terms to represent the spent nuclear fuel at the appropriate burnup and cooling time. The second part is the radiation transport simulation to calculate the dose rates near and far from a cask and an array of casks.

The radiation source terms were calculated using the SAS2H and ORIGEN-S modules from the SCALE 4.3 [1,2] code system from Oak Ridge National Laboratory. This is a widely accepted means of generating radiation source terms from spent nuclear fuel.

The radiation transport simulation was performed with MCNP 4A [3] from Los Alamos National Laboratory. This is a state of the art Monte Carlo code that offers coupled neutron-gamma transport using continuous energy cross sections in a full three-dimensional geometry.

The specifics of the radiation source term calculations and radiation transport simulation are discussed below.

3. Acceptance Criteria

The acceptance criteria for offsite dose rates are dictated by 10CFR72.104 and 10CFR72.106 and are summarized below.

Normal condition requirements from 10CFR72.104.

1. During normal operations and anticipated occurrences, the annual dose equivalent to any real individual who is located beyond the controlled area, must not exceed 25 mrem to the whole body, 75 mrem to the thyroid and 25 mrem to any other critical organ.
2. Operational restrictions must be established to meet as low as reasonably achievable (ALARA) objectives for radioactive materials in effluents and direct radiation.

Accident condition requirements from 10CFR72.106

> Any individual located on or beyond the nearest boundary of the controlled area may not receive from any design basis accident the more limiting of a total effective dose equivalent of 5 Rem, or the sum of the deep-dose equivalent and the committed dose equivalent to any individual organ or tissue (other than the lens of the eye) of 50 Rem. The lens dose equivalent shall not exceed 15 Rem and the shallow dose equivalent to skin or to any extremity shall not exceed 50 rem. The minimum distance from the spent fuel or high level radioactive waste handling and storage facilities to the nearest boundary of the controlled area shall be at least 100 meters.

References [4] and [10] and the Diablo Canyon SAR demonstrate that there are no accidents which would significantly affect shielding effectiveness of the HI-STORM. References [4] and [10] further demonstrate that the requirements of 10CFR72.106 are easily met by the HI-STORM

100 system. Therefore, explicit analysis of an accident scenario and demonstration of compliance with 10CFR72.106 was not performed. References [4] and [10] offer further discussion on this topic.

This report demonstrates that the ISFSI meets the above stated acceptance criteria.

For onsite dose rates, the following dose rate limits are used which are consistent with the requirements specified in 10CFR20:

> 5 rem/year for personnel with dose rate monitors (10CFR20.1201)
>
> 0.5 rem/year for personnel without dose rate monitors (10CFR20.1201 and 1502)
>
> 2 mrem in any one hour and 100 mrem/year for individual members of the public (10CFR20.1301)

This report demonstrates that the ISFSI is capable of meeting the above stated acceptance criteria. Compliance with 10CFR20 will be demonstrated by personnel dose monitoring in accordance with the DCPP Health Physics Program.

4. Assumptions

The following assumptions are used in this analysis:

1. It is assumed that the occupancy factor for the closest resident beyond the site boundary is 8760 hr, which is full occupancy for the entire year.
2. In compliance with the applicable portions of [9], it is assumed that the occupancy factor for the nearest site boundary, exclusion area boundary and unrestricted area boundary is 2080 hr. This assumption is based on the approach to identify individuals within the geographic location of the ISFSI, and estimate their maximum radiological exposure. The area directly outside the unrestricted area boundary is uninhabited. As a bounding approach, it is estimated that the individual with the maximum exposure would be an individual working outside the boundary for the entire year. The occupancy is then calculated based on a working week of 40 hours and 52 weeks/year.
3. It is assumed that the occupancy factor for the occupational dose rate is 2080 hr, which is based on a working week of 40 hours and 52 weeks/year.
4. It is assumed that the occupancy time for individual members of the public is administratively limited to ensure compliance with the dose rate limitation of 100 mrem/year specified by 10CFR20. Therefore, only compliance with the 2 mrem in any one hour limitation is evaluated for members of the public in this report. Compliance is demonstrated by showing that the dose rate is less than 2 mrem/hr.
5. All PWR fuel assemblies are assumed to be B&W 15x15. This is the design basis fuel assembly from reference [4]. This assembly type has a higher source term than all 17x17 assembly types used at DCPP, as demonstrated in [4]. Additional discussion on this assumption is provided in Appendix M.

6. The analyses account for the increase in cooling time of the fuel in each cask over the years of operation of the facility. Cooling times are calculated based on the assumption that 8 casks are placed into the ISFSI per year. It is assumed in the analysis that each pad is completely filled before the next pad is put into use. It is also assumed that the casks with the youngest fuel are placed closest to the front of the ISFSI and therefore the highest dose rate contribution is calculated. At a rate of eight casks per year, it will take 17.5 years to fill the ISFSI to capacity for a total minimum cooling time after core discharge of 22.5 years for the first casks deployed. However, the oldest fuel in the casks in the ISFSI was conservatively assumed to be 20 years old. No credit was taken for additional cooling from 20-22.5 years. Note that this approach also conservatively assumes that all fuel is loaded in the HI-STORM 100 System casks at 5 years' cooling time - the shortest cooling time allowed by the Technical Specifications. The distribution of cooling times within the ISFSI is shown in Figure 1.
7. It is assumed that the facility is filled to its maximum capacity in each phase, and that all HI-STORM casks are loaded with the MPC-32 with fuel of 32,500 MWD/MTU burnup, 2.9 wt% initial enrichment, and 5 year cooling time at the time of loading. This burnup and cooling time was chosen based on a comparison of the dose rates for different burnup and cooling times. It is demonstrated in Appendix A that this burnup and cooling time in the MPC-32 for the HI-STORM 100S bounds other burnup and cooling times for the MPC-32 and MPC-24 based on the allowable burnup and cooling times.
8. The burnup and cooling time assumed for the 125 ton HI-TRAC analysis is 55,000 MWD/MTU and 12-year cooling. This is based on a comparison of the dose rate for different burnup and cooling times on the side of the 125-ton HI-TRAC loaded with the MPC-24 and MPC-32. Appendix B presents the results of the comparisons and demonstrates that the burnup and cooling time chosen is bounding. The 55,000 MWD/MTU differs slightly from the value of 57,500 MWD/MTU used in reference [10]. The 55,000 MWD/MTU is basically the same value as the allowable for the MPC-24E at 12 year cooling for uniform loading.
9. The enrichment assumed for the 32,500 MWD/MTU was 2.9 wt.% ^{235}U which is consistent with reference [4]. The enrichment used for 55,000 MWD/MTU was 4.0 wt.% ^{235}U which is less than, and more conservative, than the value used in reference [4]. These values were chosen based on a review of the current DCPP fuel inventory provided in [5].
10. The cobalt-59 impurity level was assumed to be 1.0 gm/kg for the hardware above and below the active fuel region and for the grid spacers. This is a conservative value for the cobalt-59 impurity level as modern fuel is manufactured with cobalt impurity levels typically 0.3-0.5 gm/kg or less. Consistent with reference [10], the cobalt-59 impurity level in the steel in the BPRAs was assumed to be 0.8 gm/kg and in the inconel it was assumed to be 4.7 gm/kg.
11. It is conservatively assumed that all in-core grid spacers are non-zircaloy with a cobalt-59 impurity level of 1.0 gm/kg. Some of the fuel assemblies in the core periphery locations at Diablo Canyon use fuel straps which provide additional support for the fuel rods. These fuel straps are inconel and it is assumed that the mass of these straps is 30 gm/each and it is assumed that there are 10 straps per assembly. This results in an additional 300 gm of inconel in the active fuel region in addition to the 4.9 kg assumed for the grid spacers. This is a slightly more than 6% increase in the mass. Since the cobalt-59 impurity level being used for the grid spacers is 1.0 gm/kg, which is more than 20% conservative, the fuel straps are bounded by the grid spacers and therefore are not explicitly analyzed.

12. It is assumed that each fuel assembly in the ISFSI contains a BPRA with stainless steel clad and a cooling time of 13 years at the time of loading. The activation of the BPRA is based on an assembly burnup of 40,000 MWD/MTU and 24 rods per BPRA. These are conservative assumptions based on the current inventory. The current fuel inventory [11] lists only a total of 324 BPRAs, compared to a maximum of up to 4480 assemblies in the ISFSI. On average, the BPRAs have less than 14 rods each. Out of the 324 BPRAs, only 284 have stainless steel clad. The remaining 40 BPRAs have Zr-4 clad which results in lower dose rates. BPRAs have only been used in the first 3 operational cycles of the plants and it is anticipated that there is no further use of BPRAs in the future. At the time the first casks are loaded, the cooling time of the BPRAs will therefore exceed 13 years.
13. The current inventory shows 194 thimble plugs (TPs), and no future use of TPs is anticipated [5]. Typically, TPs have a lower activation than BPRAs, as TPs do not protrude into the active region of the assemblies. Each assembly can only accommodate a BPRA or a TP, but not both. Therefore, the presence of TPs is bounded by the conservative assumption regarding BPRAs (see previous assumption) and no further evaluations are required for TPs.
14. The air density in the dose versus distance calculations was assumed to be 1.17E-03 gm/cc and the air was assumed to be composed of only Nitrogen and Oxygen. Appendix L provides additional discussion on this assumption.
15. Occupancy times and dose rates for surveillance, maintenance and repair of the ISFSI are based on the following assumptions

    - Daily walk-down of the ISFSI to inspect all casks and vent openings. This requires a person to walk the full length of the ISFSI (approximately 493 ft) outside the pads and between the lines of casks on each pad. The individual will walk a maximum of 6 ISFSI lengths. This walk-down would occur once a day every day. For 1 person, the time for this walk is estimated as less than 20 min. This is based on an assumed walking speed of 2 miles/hour, the length of the ISFSI and the number of lines of casks. This results in a total occupancy of 122 hours/year.
    - Repair operations: 1 repair operation per month, 1 hour each repair, 2 persons. This results in a total occupancy of 12 hours/year/person.

    These occupancy times are estimated to demonstrate that the ISFSI can be operated within the requirements specified by 10CFR20 (see Section 3). Compliance with 10CFR20 will be demonstrated by personnel dose monitoring in accordance with the DCPP Health Physics Program. Therefore, these occupancy times do not represent any limitations or requirements.

Other assumptions are stated in the text as necessary. Since the MCNP models used in this report are based on previous HI-STORM analyses, additional assumptions and discussion can be found in references [4], [6], and [10].

5. Input Data

The input data for generating the radiation source terms is provided in references [4] and [10] and can be found in Appendix C. The input data for the MCNP models of the overpack and the MPC, including the density and composition of all materials used in the models is also available

in these references. In addition, input data for the HI-STORM 100S and a discussion of the modeling can be found in reference [15].

5.1 ISFSI Geometry

The ISFSI configuration is specified in [12] and illustrated in Figure 1. The number associated with each cask location in Figure 1 is the minimum cooling time of the fuel in each cask (see Section 4, Assumption 6). There are a maximum of 7 pads being constructed, each of which will hold a 4x5 array of HI-STORM 100S casks. In the final configuration the ISFSI will be a 5x28 array of casks. The center to center pitch for the casks is 17 feet and the pads will be positioned such that the pitch between casks on adjacent pads is maintained at 17 feet. An overpack is 11 feet 1/2 inch in diameter. There will be a security fence and two nuisance fences placed around the ISFSI. The outer nuisance fence will be located to maintain the dose rate below 2 mrem/hr. The ISFSI site is cut into a hill slightly. Only one of the long sides of the ISFSI is on the same level with the surrounding area. This is the front side facing the controlled area boundary. The sides and the back of the ISFSI face the excavated slopes of the hill.

Dose rates are calculated as a function of distance from the cask array. The distances include the following dose locations:

Offsite dose locations:

Nearest resident	1.5 miles / 2414 m	[7]
Unrestricted Area Boundary	1400 ft / 426.7 m	[7]

Onsite dose locations:

Aux. Building Wall	798 ft / 243.2 m	[7]
Make-up water Facility	223 ft / 68.0 m	[7]
Nuisance Fence, Front	100 ft / 31.4 m	assumed

It is conservatively assumed that there are no obstructions (i.e. hills, buildings, earth berms) between the cask array and any of the dose locations.

6. Computer Codes

The computer codes used for these calculations were the following.

1. SAS2H module from SCALE 4.3 - reference [1]
2. ORIGEN-S module from SCALE 4.3 - reference [2]
3. MCNP 4A - references [3] and [6]

7. Analysis and Results

This section of the report describes the calculations that were performed to determine the dose rates for various distances and locations. The basic development of the MCNP models, including source terms and tally normalization, had already been accomplished during the HI-STORM 100 project. This information is appropriately referenced as needed.

7.1 Source Terms

There are three distinct primary radiation source terms that must be accounted for in the analysis of the HI-STORM 100 system. These are:

1. Neutron source from the decay of spent nuclear fuel.
2. Photon source from the decay of spent nuclear fuel.
3. Photons from the decay of Cobalt-60 in the end-fittings of the fuel assemblies. This source represents the activation of the steel components in the fuel assemblies.

These radiation source terms were calculated using the SAS2H and ORIGEN-S modules of SCALE 4.3. A full description of the methodology can be found in reference [4]. The source terms for the 32,500 and 55,000 MWD/MTU design basis fuel can be found in Appendix C.

A secondary source of radiation is from the following:

1. Secondary neutrons from fast fission in the fuel.
2. Secondary photons from prompt neutron interactions in the MPC and overpack.

These secondary sources are automatically accounted for during the MCNP calculation by running a coupled neutron-gamma calculation.

Curies of Cobalt-60 in the BPRAs are also listed in Appendix C. The allowable burnup and cooling times for BPRAs and TPDs are calculated in Appendix N.

7.2 MCNP Modeling of the MPC, HI-STORM Overpack, and 125-ton HI-TRAC Transfer Cask

All MCNP calculations are performed for a HI-STORM 100S loaded with the MPC-24. Results for the HI-STORM loaded with the MPC-32 are obtained from the MPC-24 results through multiplication with the ratio of assemblies in each MPC. This is slightly conservative, as it neglects the increased self shielding within the MPC-32.

The MPC and the overpack were modeled in full three-dimensional detail using MCNP. The description of the modeling process can be found in references [4], [6], and [10].

References [4], [6], and [10] identify a couple of modeling discrepancies between the MCNP model of the overpack and the design basis drawings. These discrepancies are:

1. The steel channels in the cavity between the MPC and overpack were not modeled. This is conservative since it removes steel that would provide a small amount of additional shielding.
2. The bolt anchor blocks were not explicitly modeled. Concrete was used instead. These are small localized items and will not impact dose rates.
3. The exit vents in the overpack were modeled as being inline with the inlet vents. In practice, they are rotated 45 degrees and positioned above the short radial plates. Therefore, this modeling change has the exit vents positioned above the full length radial plates. This modeling change has minimal impact on the dose rates at the exit vents.
4. The short radial plates in the overpack were modeled in MCNP event though they are optional on the drawings.

The MCNP models of the 125-ton HI-TRAC described in References [4], [6], and[10] have been updated to incorporate the latest Engineering Change Orders (ECOs). The only difference between the models used in this analysis and the design of the 125-ton HI-TRAC is the following.

- The pocket trunnions on the 125-ton HI-TRAC transfer cask have been removed.

Section 10.1 provides a listing of the drawings that were used to generate the MCNP models used in this report. In certain calculations, an earlier version of the HI-STORM 100S design was used for some of the MCNP models. This is described in more detail and justified in Section 10.1.

7.3 Method of Tallying

In MCNP, the calculation of a user requested quantity (e.g. dose rate) is referred to as tallying. The tally results calculated in MCNP are normalized per starting particle. Therefore, the MCNP results must be normalized to the actual source strength for the system being analyzed. This normalization is done after the computer runs are completed and is done in EXCEL. The method of the tally normalization is described in reference [6].

7.4 Choice of Design Basis Burnup and Cooling Time

The burnup and cooling times used in this analysis were chosen based on a review of the dose rates from the HI-STORM 100S and the 125-ton HI-TRAC with different burnup and cooling times from the allowable burnup and cooling times. The results indicate that the 32,500 MWD/MTU and 5 year cooling for the MPC-32 bound the allowable burnup and cooling times for both the MPC-24 and MPC-32 for the HI-STORM 100S. The results also indicate that 55,000 MWD/MTU and 12 year cooling for the MPC-24 bound the allowable burnup and cooling times for both the MPC-24 and MPC-32 for the 125-ton HI-TRAC analysis. The results of these comparisons are presented in Appendices A and B for the HI-STORM and HI-TRAC respectively.

The burnup and cooling times analyzed were for uniform loading. Results presented in reference [10] indicate that the dose rates for the HI-TRAC transfer cask from burnup and cooling times taken from the allowable contents for uniform loading bound or are equivalent to the dose rates from burnup and cooling times for regionalized loading. The same conclusions would be true for the HI-STORM cask. Therefore, explicit analysis of the regionalized loading pattern was not performed.

In Appendix P site boundary dose analyses are performed to support a license amendment of Diablo Canyon (DC) ISFSI to allow the storage of High burnup fuel, ITTRs and neutron sources in the DC specific MPC-32 design. Burnup and cooling time combination is used from Reference [16] which is the corresponding FSAR for HI-STORM CoC amendment 5.

7.5 Dose Calculations for the HI-STORM 100S on the ISFSI

7.5.1 MCNP Surface Source Calculations

MCNP offers the capability to generate a surface source file in one calculation which can then be used in other calculations. The surface source file contains information for particle tracks that cross user designated surfaces. Particles are either neutrons or photons. This method of using a surface source file has a major benefit because the user can generate a surface source file for particles leaving the overpack and then use this file in different runs with different overpack arrangements. The advantage is that, for each overpack arrangement, the user does not have to waste valuable computer time tracking particles out of the overpack since this information is already contained on the surface source file.

Reference [6] describes in detail the use of the surface source file for analysis of the HI-STORM 100 system.

Since there are three separate radiation sources (neutron, gamma, and Cobalt-60) a minimum of three different MCNP calculations had to be performed. A brief description of these MCNP calculations is provided here. The computer input file names are listed in Section 8.

1. A coupled neutron-gamma calculation using the neutron source was performed to generate a surface source file for particles leaving the side and top of the overpack.
2. A gamma only calculation was performed using the decay gamma source. This run generated a surface source file for particles leaving the side and top of the overpack. The energy range of starting particles was 0.7 MeV to 1.5 MeV.
3. A gamma only calculation was performed using the decay gamma source. This run generated a surface source file for particles leaving the side and top of the overpack. The energy range of starting particles was 1.5 MeV to 3.0 MeV.
4. A gamma only calculation was performed using the decay gamma source. This run generated a surface source file for particles leaving the side and top of the overpack. The energy range of starting particles was 0.3 MeV to 0.7 MeV.
5. A gamma only calculation using the Cobalt-60 source was performed. This calculation generated a surface source file for particles leaving the side and top of the overpack.

In some cases, the MCNP runs that generated the surface source file for the side and top of the HI-STORM overpack were different. The specifics of each MCNP calculation are listed in Section 8. The surface source technique was only used for the HI-STORM analysis.

7.5.2 Dose Rates Adjacent to the Overpack

MCNP calculations were performed to determine the dose rate at the surface of the overpack and at a distance of 1 meter from the overpack. The computer input files used for the calculations are listed in Section 8.

Appendix D contains the EXCEL output showing the doses at the surface and 1 meter from the HI-STORM 100S overpack. Theses dose rates are expressed in mrem/hr. A summary of the important dose locations is provided in Section 9.

7.5.3 Cask Configurations for Dose Versus Distance Calculations

Figure 1 shows a diagram of the ISFSI. The estimation of the dose from a facility of this size and orientation is a complicated calculation. It is almost impossible and certainly impractical to try to model the entire facility in MCNP or any other computer code. Therefore, numerous smaller calculations had to be performed. The results from these smaller calculations were combined in a conservative fashion to estimate the dose from the entire facility.

The radiation source from this facility can be separated into two components. The first will be referred to as the top-dose. This is the dose from radiation that leaves the tops of the overpacks. The second component will be referred to as side-dose. This is the dose from radiation that leaves the sides of the overpacks.

The geometry of the facility will impact each of these dose components in a different fashion. The total top-dose will be a summation of the top-doses from all 140 casks where the actual distance from the dose location to the individual cask is accounted for.

The total side-dose will be a summation of the side-doses from all 140 casks where the distances within the facility and the self-shielding of one row of casks to another row are accounted for. Since the side-dose is from particles leaving the side of the overpack, this dose contribution will be greatly reduced if the cask is situated behind another cask. The front cask blocks radiation from reaching the site-boundary. However, it is incorrect to say that the front cask completely blocks all radiation from the back cask. The fraction of radiation blocked was therefore calculated with MCNP and used in the determination of the total side-dose.

Dose locations along the long side of the cask array are facing 28 casks directly, i.e. without being shielded by other casks. Dose locations along the short side of the array only face 5 casks directly. Dose rates at dose points along the long side of the array will therefore always be higher than dose rates at dose points along the short side of the array. As a bounding approach, dose rates are generally calculated for the long side of the array, regardless of the actual orientation of the dose location relative to the cask array. In the particular case of the ISFSI shown in Figure 1, the peak dose location is perpendicular to the long side of the array but is not in the center of the

array. Rather the peak dose location is approximately in the center of Pad 6 in the North direction.

Figure 2 shows three different overpack configurations that were analyzed to determine the self-shielding effects. Since particles leaving the top of the overpack are not self-shielded, only particles leaving the side of the overpack were used in the sources for these configurations. Therefore, the results from these configurations will apply only to the side-dose. These configurations are described in detail below.

7.5.3.1 Configuration 1

Configuration 1 is a single cask surrounded by 1050 meters of air in the radial direction and 700 meters of air in altitude. The cask is sitting on an infinite slab of dirt. This configuration was used to calculate the average dose rate versus distance for a single cask. The dose rate from particles leaving the side of the cask was calculated separately from the dose rate from particles leaving the top of the cask. The total dose rate was also calculated.

These dose rates were combined in a manner, which is discussed later, to determine the dose rate from the entire facility at the site boundary and security fence.

The MCNP input files used to analyze this configuration are listed in Section 8. All three sources (neutron, photon, and cobalt) were analyzed in this configuration. The results for this configuration are presented in Appendix E.

7.5.3.2 Configuration 2

[

]

7.5.3.3 Configuration 3

[

]

7.5.4 Final Dose Rate Calculations

[

]

Appendix G presents the results of the calculations to determine the dose rate as a function of distance from the ISFSI. [

] The results are summarized in Section 9.

The dose rates at a distance of 1.5 miles were estimated by extrapolation using appropriate curves. The curves were calculated by fitting the data from the total dose rates versus distance for the entire cask array for distances between 300 and 600 m. The curves reproduce the calculated dose rates between 300 m and 600 m within less than 2.5 %.

Based on the assumed occupancy times and ISFSI dose rates, personnel dose values for the operation and maintenance of the ISFSI are calculated in Appendix H. The accumulated dose for the construction of the last pad is also calculated in Appendix H. Since these operations will occur inside the ISFSI array, a conservative calculation was performed to estimate the dose rate. [

.]The results are presented in Appendix H and summarized in Section 9. The MCNP calculations are listed in Section 8.

7.6 Dose Rates from the HI-STORM 100S Without a Lid

The MPC transfer operations from the 125-ton HI-TRAC transfer cask to the HI-STORM 100S overpack will occur outside the Part 50 structure at the Cask Transfer Facility (CTF). As a result of this, the off-site dose rate from the HI-STORM overpack in the CTF must be calculated. The overpack configuration in the CTF and on the ISFSI are essentially identical with the following

exception. After the MPC has been lowered into the HI-STORM overpack and the HI-TRAC transfer cask has been removed, the HI-STORM overpack will be temporarily without a lid. This lidless configuration will permit a significant amount of radiation streaming out the top of the overpack because of the annular gap between the MPC and the overpack. Therefore, the dose rate as a function of distance from a lidless overpack in the CTF was calculated.

The dose rate was calculated only for radiation leaving the top surface of the lidless overpack. The dose rate from radiation leaving the side of the overpack is already accounted for in the ISFSI dose rate calculations. [

] The surrounding air and ground region were as described in Section 7.5.3.1. The MCNP surface source technique, as described in Section 7.5.1, was used for these calculations. The specific input files are listed in Section 8.

The results of these calculations are presented in Appendix I.

7.7 Dose Rates from the 125-ton HI-TRAC Transfer Cask

The 125-ton HI-TRAC transfer cask will be used at DCPP for loading the MPC and transferring the MPC to the HI-STORM overpack. Therefore, the dose rates from the 125-ton HI-TRAC were calculated for use in estimating the occupational exposure during loading operations.

7.7.1 Normal Conditions

The physical configuration of the HI-TRAC used for calculating the dose rate from radiation leaving the side of the overpack was as described in Section 7.2. [

]

The normal condition for the 125-ton HI-TRAC may or may not have water in the water jacket and may or may not have water in the MPC. These conditions vary depending on the process being performed in the loading evolution. For example, water is not present in the water jacket when the HI-TRAC is removed from the spent fuel pool; however, water is in the MPC. For all models, the outer water jacket was assumed to be filled with water and the MPC was assumed to be dry. This is the configuration that exists after the MPC has been seal welded and undergone the moisture removal process.

The configuration with water in the water jacket and no water in the MPC was used for all personnel dose calculations. After the MPC is removed from the spent fuel pool there is water in the MPC and no water in the water jacket. The HI-TRAC is then placed in the cask washdown area where the water jacket is filled to provide additional shielding before significant work

begins. This configuration of water in both the water jacket and the MPC exists through the MPC closure operations until the moisture removal phase begins. Therefore, the dose calculations with water in the water jacket but not in the MPC are conservative for the conditions existing prior to the moisture removal since the additional shielding provided by the water in the MPC is not accounted for. The temporary shielding which will be placed above the water jacket surrounding the HI-TRAC transfer cask consists primarily of water. Credit was taken for this shielding in one set of calculations.

The following three variations of the normal configuration were analyzed.

- Normal conditions with water in the water jacket and no water in the MPC. HI-TRAC lid is installed.
- Normal conditions with water in the water jacket and no water in the MPC. HI-TRAC lid is not installed.
- Normal conditions with water in the water jacket and no water in the MPC. HI-TRAC lid is not installed but the temporary shielding is installed. The temporary shielding was modeled as water extending from the water jacket upward to the top of the upper forging and out radially to the edge of the water jacket.

The results of these calculations are presented in Appendix J and the input files used are listed in Section 8.

7.7.2 Accident Conditions

In addition to the normal condition dose rates, the dose rate around the transfer cask was calculated for a postulated accident scenario in which the transfer cask undergoes a vertical drop. The potential consequence of this vertical drop is a slump in the lead below the upper forging and below the lifting trunnion. The magnitude of this lead slump was calculated to be less than 0.7 inches in reference [13]. Conservatively, the lead slump was modeled as 0.8 inches. The dose rate was calculated in a localized area around the lifting trunnion. This area was the width of the lifting trunnion and 4.125 inches in height and fully encompassed the lead slump below the lifting trunnion. The region of highest dose for the lead slump accident occurs below the lifting trunnion since this region is closest to the active fuel zone.

The dose rate was calculated over the same area at radial distances equal to the edge of the water jacket, and 6 inches, 1 foot, 2 foot, and 1 meter from the edge of the water jacket. For the lead slump calculations, the water in the water jacket and MPC were not modeled. The dose rate was calculated before and after the lead slump event.

The results of these calculations are presented in Appendix J and the input files used are listed in Section 8. The dose consequences from the accidental loss of the water jacket are reported in references [4] and [10].

7.8 Doses During Loading and Unloading Operations

The results from the calculation of dose rates around the HI-STORM overpack and the HI-TRAC transfer cask with design basis fuel were used to estimate the occupational exposure during the loading and unloading operations. The results of this estimate are presented in Appendix K.

The sequence of steps listed for loading and unloading is meant to be representative of the loading and unloading process and not an exhaustive list of the processes. The estimated duration of the step is provided as well as the time in the dose field. The difference between the two is that the process may take X amount of time but the workers only have to be near the cask for Y amount of time. Consistent with ALARA principles, the workers will be in an area of lower dose when their presence is not required around the transfer or storage cask. Likewise, the number of workers around the transfer or storage cask will be kept to a minimum. The dose rates reported in Appendix K were calculated by taking the number of workers times the dose at the location times the time in the dose field. Appendix K provides additional discussion about the dose calculations for the occupational exposure estimates.

As mentioned in Section 7.7, the MPC will be filled with water during a portion of the loading and unloading operations. Conservatively, this additional shielding was not credited in the analysis.

8. Computer Files

All computer runs listed here were made on PCs at Holtec's main office. All files are stored on the Holtec computer server in directory \projects\1073\eredmond.

The following is a list of all MCNP runs that were used in this report. See Section 7 for details of the calculations.

Input File	Description
MCNP HI-STORM 100S calculations for the ISFSI	
h4c5d11	
h4c5d12	
h4c5e07	
h4n5d11	
h4n5d12	
h4n5e07	

Input File	Description
h4p5d11	
h4p5d12	
h4q5d11	
h4q5d12	
h4r5d11	
h4r5d12	
h4p5e08	
h4p5e11	
h4q5e07	
h4q5e10	
h4r5e07	
h4r5e10	
h4c5d21	
h4n5d15	
h4p5d15	
h4q5d15	
h4r5d15	
h4c5d22	
h4n5d16	
h4p5d16	
h4q5d16	

Input File	Description
h4r5d16	
MCNP HI-STORM 100S calculations inside the ISFSI	
h4c5d23	
h4n5d17	
h4p5d17	
h4q5d17	
h4r5d17	
h4p5e14	
h4q5e13	
h4r5e13	
MCNP HI-STORM 100S without a lid calculations	
h4c5e05	MPC-24 cobalt run to generate surface source out top of overpack without lid
h4c5e06	MPC-24 run using h4c5e05 calculating dose versus distance
h4n5e05	MPC-24 neutron run to generate surface source out top of overpack without lid
h4n5e06	MPC-24 run using h4n5e05 calculating dose versus distance
h4p5e09	MPC-24 photon run to generate surface source out top of overpack without lid - 0.7-1.5 MeV
h4p5e10	MPC-24 run using h4p5e09 calculating dose versus distance
h4q5e08	MPC-24 photon run to generate surface source out top of overpack without lid - 1.5-3.0 MeV
h4q5e09	MPC-24 run using h4q5e08 calculating dose versus distance
h4r5e08	MPC-24 photon run to generate surface source out top of overpack without lid - 0.3-0.7 MeV
h4r5e09	MPC-24 run using h4r5e08 calculating dose versus distance
h4c3d03	
h4p3d03	
h4q3d03	
h4r3d03	
h4n3d03	
h4c5d24	

Input File	Description
h4c5d25	
h4n5d19	
h4n5d21	
h4p5d19	
h4p5d23	
h4q5d19	
h4q5d23	
h4r5d19	
h4r5d23	
MCNP 125-ton HI-TRAC calculations with tallies along the axial length at various radial distances - normal conditions with water in the water jacket but not in the MPC	
u4c5a02	MPC-24 cobalt source - HI-TRAC lid installed
u4p5a02	MPC-24 photon source - HI-TRAC lid installed - 0.7-3.0 MeV
u4q5a02	MPC-24 photon source - HI-TRAC lid installed - 0.45-0.7 MeV
u4n5a02	MPC-24 neutron source - HI-TRAC lid installed
u4c5a04	MPC-24 cobalt source - HI-TRAC lid not installed
u4p5a04	MPC-24 photon source - HI-TRAC lid not installed - 0.7-3.0 MeV
u4q5a04	MPC-24 photon source - HI-TRAC lid not installed - 0.45-0.7 MeV
u4n5a04	MPC-24 neutron source - HI-TRAC lid not installed
u4c5a05	MPC-24 cobalt source - HI-TRAC lid not installed - temporary shielding installed
u4p5a05	MPC-24 photon source - HI-TRAC lid not installed - temporary shielding installed - 0.7-3.0 MeV
u4q5a05	MPC-24 photon source - HI-TRAC lid not installed - temporary shielding installed - 0.45-0.7 MeV
u4n5a05	MPC-24 neutron source - HI-TRAC lid not installed - temporary shielding installed
MCNP 125-ton HI-TRAC calculations with tallies along the axial length at various radial distances - accident conditions with no water in the water jacket or the MPC	
u4c5c04	MPC-24 cobalt source - HI-TRAC lid installed
u4c5c05	MPC-24 cobalt source - HI-TRAC lid installed - 0.8 inch lead slump
u4p5c04	MPC-24 photon source - HI-TRAC lid installed - 0.7-3.0 MeV
u4p5c05	MPC-24 photon source - HI-TRAC lid installed - 0.8 inch lead slump - 0.7-3.0 MeV

Input File	Description
u4q5c04	MPC-24 photon source - HI-TRAC lid installed - 0.45-0.7 MeV
u4q5c05	MPC-24 photon source - HI-TRAC lid installed - 0.8 inch lead slump - 0.45-0.7 MeV
u4n5c04	MPC-24 neutron source - HI-TRAC lid installed
u4n5c05	MPC-24 neutron source - HI-TRAC lid installed - 0.8 inch lead slump
MCNP 125-ton HI-TRAC calculations with radial tallies along the top and bottom surface - normal conditions with water in the water jacket but not in the MPC	
ht24c03	MPC-24 cobalt source - HI-TRAC lid installed - pool lid installed
ht24n03	MPC-24 neutron source - HI-TRAC lid installed - pool lid installed
ht24p03	MPC-24 photon source - HI-TRAC lid installed - pool lid installed - 0.7-3.0 MeV
ht24p23	MPC-24 photon source - HI-TRAC lid installed - pool lid installed - 0.45-0.7 MeV
u4c5a06	MPC-24 cobalt source – HI-TRAC lid installed – pool lid with 2.5 inches Holtite-A on bottom
u4n5a06	MPC-24 neutron source – HI-TRAC lid installed – pool lid with 2.5 inches Holtite-A on bottom
u4p5a06	MPC-24 photon source – HI-TRAC lid installed – pool lid with 2.5 inches Holtite-A on bottom - 0.7-3.0 MeV
u4q5a06	MPC-24 photon source – HI-TRAC lid installed – pool lid with 2.5 inches Holtite-A on bottom - 0.45-0.7 MeV
u4c3a01	
u4p3a01	
u4q3a01	
u4n3a01	
B&W 15x15 ORIGEN-S and SAS2H input files	
a70a4a1a.inp	SAS2H input file for 70,000 MWD/MTU 4.0 wt.% ^{235}U B&W 15x15
a45a4a3a.inp	ORIGEN-S input file for 45,000 MWD/MTU 4.0 wt.% ^{235}U B&W 15x15
a45a4a3c.inp	ORIGEN-S input file for 45,000 MWD/MTU 4.0 wt.% ^{235}U B&W 15x15 with 1 gm Co-59
a50a4a3a.inp	ORIGEN-S input file for 50,000 MWD/MTU 4.0 wt.% ^{235}U B&W 15x15
a50a4a3c.inp	ORIGEN-S input file for 50,000 MWD/MTU 4.0 wt.% ^{235}U B&W 15x15 with 1 gm Co-59
a52m4a3a.inp	ORIGEN-S input file for 52,500 MWD/MTU 4.0 wt.% ^{235}U B&W 15x15
a52m4a3c.inp	ORIGEN-S input file for 52,500 MWD/MTU 4.0 wt.% ^{235}U B&W 15x15 with 1 gm Co-59
a55a4a3a.inp	ORIGEN-S input file for 55,000 MWD/MTU 4.0 wt.% ^{235}U B&W 15x15
a55a4a3c.inp	ORIGEN-S input file for 55,000 MWD/MTU 4.0 wt.% ^{235}U B&W 15x15 with 1 gm Co-59
a70a4k1a.inp	SAS2H input file for 70,000 MWD/MTU 4.5 wt.% ^{235}U B&W 15x15
a60a4k3a.inp	ORIGEN-S input file for 60,000 MWD/MTU 4.5 wt.% ^{235}U B&W 15x15

Input File	Description
a60a4k3c.inp	ORIGEN-S input file for 60,000 MWD/MTU 4.5 wt.% ^{235}U B&W 15x15 with 1 gm Co-59
15bw_xsc.in	SAS2H input file for 42,500 MWD/MTU 2.9 wt.% ^{235}U B&W 15x15
15bw325.in	ORIGEN-S input file for 32,500 MWD/MTU 2.9 wt.% ^{235}U B&W 15x15
15bw325c.in	ORIGEN-S input file for 32,500 MWD/MTU 2.9 wt.% ^{235}U B&W 15x15 with 1 gm Co-59
15bw_xsd.in	SAS2H input file for 42,500 MWD/MTU 3.2 wt.% ^{235}U B&W 15x15
15bw375.in	ORIGEN-S input file for 37,500 MWD/MTU 3.2 wt.% ^{235}U B&W 15x15
15bw375c.in	ORIGEN-S input file for 37,500 MWD/MTU 3.2 wt.% ^{235}U B&W 15x15 with 1 gm Co-59
15bw_xs.in	SAS2H input file for 45,000 MWD/MTU 3.4 wt.% ^{235}U B&W 15x15
15bw415.in	ORIGEN-S input file for 41,500 MWD/MTU 3.4 wt.% ^{235}U B&W 15x15
15bw415c.in	ORIGEN-S input file for 41,500 MWD/MTU 3.4 wt.% ^{235}U B&W 15x15 with 1 gm Co-59
15bw_xse.in	SAS2H input file for 50,000 MWD/MTU 3.6 wt.% ^{235}U B&W 15x15
15bw475.in	ORIGEN-S input file for 47,500 MWD/MTU 3.6 wt.% ^{235}U B&W 15x15
15bw475c.in	ORIGEN-S input file for 47,500 MWD/MTU 3.6 wt.% ^{235}U B&W 15x15 with 1 gm Co-59
Westinghouse 17x17 ORIGEN-S and SAS2H input files	
17w29xs.in	SAS2H input file for 42,500 MWD/MTU 2.9 wt.% ^{235}U W17x17
17w40xs.in	SAS2H input file for 60,000 MWD/MTU 4.0 wt.% ^{235}U W17x17
17w325.in	ORIGEN-S input file for 32,500 MWD/MTU 2.9 wt.% ^{235}U W17x17
17w325c.in	ORIGEN-S input file for 32,500 MWD/MTU 2.9 wt.% ^{235}U W17x17 with 1 gm Co-59
17w550.in	ORIGEN-S input file for 55,000 MWD/MTU 4.0 wt.% ^{235}U W17x17
17w550c.in	ORIGEN-S input file for 55,000 MWD/MTU 4.0 wt.% ^{235}U W17x17 with 1 gm Co-59

9. Summary

The shielding analysis of the Independent Spent Fuel Storage Installation (ISFSI) at Diablo Canyon Power Plant (DCPP) is presented in this report. The facility consists of up to 140 HI-STORM 100S casks and is assumed to be filled with fuel of 32,500 MWD/MTU and a minimum cooling time of 5 years. Figure 1 shows the ISFSI configuration with the age of the fuel in the cask shown inside the circle representing the cask. The dose rates were calculated for a single cask and the entire array. The results of the single cask analysis are presented below for the surface and 1 meter dose rates.

Dose Rates on the Surface of the HI-STORM 100S
32,500 MWD/MTU and 5 Year Cooling
(mrem/hr)

Location	Neutron	Photon†	Cobalt	Total
Bottom duct	2.90	6.80	17.01	26.72
Fuel midplane	0.76	33.92	0.11	34.79
Top duct	2.55	9.90	18.32	30.77
Top of overpack, above shield block	0.91	1.56	1.47	3.93
Top of overpack, above exit ducts	13.00	2.45	13.42	28.87

† photons from neutron interactions are included in the photon dose

Dose Rates at 1 meter from the HI-STORM 100S
32,500 MWD/MTU and 5 Year Cooling
(mrem/hr)

Location	Neutron	Photon†	Cobalt	Total
Bottom duct	0.34	4.84	5.33	10.50
Fuel midplane	0.35	17.04	0.57	17.95
Top duct	0.37	4.64	5.00	10.02
Top of overpack	0.42	0.39	0.51	1.32

† photons from neutron interactions are included in the photon dose

For the operation of the ISFSI, the following dose rates are calculated.

Operation	Persons	Occupancy (hours/year)	Dose Rate (mrem/hr)	Dose (person-rem/year)
Walk-down	1	122	15.0	1.83
Repairs	2	12	65.0	1.56
Construction of ISFSI pad 7	15	480	6.02	43.3

For other on-site and off-site dose locations, the following dose rates are calculated. Distances specified are distances from the cask surface.

Location	Distance		Occupancy	Dose	
	m	ft	hours	mrem/hr	mrem/year
Nuisance Fence, Front	30.48	100	n/a	1.87	n/a
Make-up Water Facility	67.97	223	2080	5.08E-01	1.06E+3
Reactor	243.23	798	2080	2.23E-02	4.65E+01
Site Boundary	426.72	1400	2080	2.72E-03	5.65
Nearest Resident	2414	7920	8760	4.03E-08	3.53E-04

The hourly and annual dose rates from the cask array as a function of distance are presented in the following table. The annual dose rates are specified for occupancy factors of 8760 hrs/yr and for 2080 hrs/yr. The doses were calculated at locations that were perpendicular to the long side of the array at distances ranging from 40 feet to 600 m from the array. Doses for the distance of 1.5 miles (nearest resident) were determined by extrapolation. Up to 600 m, linear interpolation can be used to determine the dose at intermediate distances.

Hourly and Annual Dose Rates at Distances from the ISFSI

Distance		Dose		
m	ft	mrem/yr (8760 hrs/yr)	mrem/yr (2080 hrs/yr)	mrem/hr
4.57	15.00	1.05E+05	2.50E+04	1.20E+01
6.10	20.00	8.73E+04	2.07E+04	9.97E+00
15.24	50.00	3.92E+04	9.31E+03	4.47E+00
30.48	100.00	1.64E+04	3.89E+03	1.87E+00
33.53	110.00	1.43E+04	3.40E+03	1.63E+00
42.67	140.00	9.73E+03	2.31E+03	1.11E+00
45.72	150.00	8.67E+03	2.06E+03	9.90E-01
60.96	200.00	5.35E+03	1.27E+03	6.11E-01
67.97	223.00	4.45E+03	1.06E+03	5.08E-01
79.25	260.00	3.32E+03	7.89E+02	3.79E-01
91.44	300.00	2.46E+03	5.85E+02	2.81E-01
105.16	345.00	1.85E+03	4.39E+02	2.11E-01
135.64	445.00	1.01E+03	2.41E+02	1.16E-01
243.23	798.00	1.96E+02	4.65E+01	2.23E-02
250.00	820.21	1.79E+02	4.26E+01	2.05E-02
300.00	984.25	9.90E+01	2.35E+01	1.13E-02
350.00	1148.29	5.50E+01	1.31E+01	6.28E-03
400.00	1312.34	3.14E+01	7.45E+00	3.58E-03
426.72	1400.00	2.38E+01	5.65E+00	2.72E-03
450.00	1476.38	1.88E+01	4.46E+00	2.14E-03
500.00	1640.42	1.17E+01	2.77E+00	1.33E-03
550.00	1804.46	7.51E+00	1.78E+00	8.57E-04
600.00	1968.50	4.99E+00	1.18E+00	5.69E-04
2414.02	7920 (1.5 miles)	3.53E-04	8.38E-05	4.03E-08

The following tables contain total dose rates from effluent release and direct radiation compared to regulatory limits. Dose rates from effluent release were taken from [8]. The first table lists dose rates for normal and off-normal conditions. The second table lists doses for accident conditions for a 30 day period. Both tables are for an individual at the site boundary (1400 ft).

	Dose Rate from Effluent Release (mrem/year) **Reference [8] 8760 hours/yr**	**Direct Dose Rate (mrem/year)** **This report 2080 hours/yr**	**Total Dose Rate (mrem/year)**	**Regulatory Limit (mrem/year)**
10CFR72.104(a) – Normal (140 casks)				
Whole Body ADE	0.27	5.65	5.92	25
Thyroid ADE	0.043	5.65	5.693	75
Critical Organ ADE (Max)	1.46	5.65	7.11	25
10CFR72.104(a) – Off-Normal (140 casks)				
Whole Body ADE	0.75	5.65	6.40	25
Thyroid ADE	0.06	5.65	5.71	75
Critical Organ ADE (Max)	5.49	5.65	11.14	25
ADE: Annual Dose Equivalent				

It has to be noted that the dose rates from other Uranium Fuel Cycle operations have to be added to the values listed above to determine whether the regulatory requirements for normal conditions (10CFR72.104) are met.

	Dose from Effluent Release (mrem/30 days) Reference [8]	Direct Dose Rate (mrem/30 days) (This report)	Total Dose (mrem/30 days)	Regulatory Limit (mrem/30 days)
10CFR72.106(b) – Accident (1 cask)				
TEDE	0.83	1.96	2.79	5000
TODE = DDE + CDE (Max)	6.36	1.96	8.32	50000
LDE	0.022	1.96	1.982	15000
SDE	0.026	1.96	1.986	50000
ADE: Annual Dose Equivalent; TEDE: Total Effective Dose Equivalent; TODE: Total Organ Dose Equivalent; DDE: Deep Dose Equivalent; LDE: Lens Dose Equivalent; SDE: Shallow Dose Equivalent				

Please note that the direct dose under accident conditions is identical to the direct dose under normal conditions since there are no accidents which significantly affect the shielding of the HI-STORM overpack. Therefore, as a conservative estimate, the dose from the complete ISFSI at the site boundary over a period of 30 days (2.72E-03 mrem/hr * 30 days * 24 hr/day) is used in above table.

10. References[†]

[1] O. W. Hermann, C. V. Parks, *SAS2H: A Coupled One-Dimensional Depletion and Shielding Analysis Module*, NUREG/CR-0200, Revision 5, (ORNL/NUREG/CSD-2/V2/R5), Oak Ridge National Laboratory, September 1995.

[2] O. W. Hermann, R. M. Westfall, *ORIGEN-S: SCALE System Module to Calculate Fuel Depletion, Actinide Transmutation, Fission Product Buildup and Decay, and Associated Radiation Source Terms*, NUREG/CR-0200, Revision 5, (ORNL/NUREG/CSD-2/V2/R5), Oak Ridge National Laboratory, September 1995.

[3] J. F. Briesmeister, editor, *MCNP - A General Monte Carlo N-Particle Transport Code,* LA-12625-M, Los Alamos National Laboratory, November 1993.

[4] *Final Safety Analysis Report for the HI-STORM 100 Cask System,* HI-2002444, Rev. 0, Holtec International (US NRC Docket No. 72-1014).

[5] PG&E Specification 10012-N-NPG.

[6] *HI-STORM Shielding Design and Analysis for Storage,* HI-971608, Rev. 13, Holtec International.

[7] "Diablo Canyon ISFSI Project – Diablo Canyon Units 1 and 2 – Transmittal of design inputs, site information and reference identification", Letter from R. L. Klimczak (PG&E) to E. Lewis (Holtec), January 23th, 2001.

[8] *Diablo Canyon ISFSI Site Boundary Confinement Analysis*, HI-2002513, Rev. 4, Holtec International.

[9] *Real Individual*, USNRC Interim Staff Guidance (ISG) No. 13, Rev. 0, May 2000.

[10] HI-STORM 100 License Amendment Request (LAR) 1014-1, Revision 2, July 2001.

[†] Note: This revision status of Holtec documents cited above is subject to updates as the project progresses. This document will be revised if a revision to any of the above-referenced Holtec work products materially affects the instructions, results, conclusions or analyses contained in this document. Otherwise, a revision to this document will not be made and the latest revision of the referenced Holtec documents shall be assumed to supersede the revision numbers cited above. The Holtec Project Manager bears the undivided responsibility to ensure that there is no intra-document conflict with respect to the information contained in all Holtec-generated documents on a *safety-significant* project. The latest revision number of all documents produced by Holtec International in a *safety-significant* project is readily available from the company's Document Transmittal Form (DTF) database.

[11] "Diablo Canyon ISFSI Project – Diablo Canyon Units 1 and 2 – Transmittal of PG&E design inputs", Letter from Richard Klimczak (PG&E) to Eric Lewis (Holtec), November 17, 2000.

[12] "Diablo Canyon ISFSI Project – Diablo Canyon Units 1 and 2 Transmittal of design inputs, site information and reference identification.", Letter from Richard Klimczak (PG&E) to Eric Lewis (Holtec), February 19, 2001.

[13] *Structural Analysis Of HI-TRAC -Vertical Drops And Tipover In Diablo Canyon Fuel Building,* HI-2002506, Rev. 0, Holtec International.

[14] *HI-STAR Shielding Design and Analysis for Transport and Storage,* HI-951322, Rev. 12, Holtec International.

[15] *HI-STORM 100 System Additional Shielding Calculations,* HI-2012702, Rev. 4, Holtec International.

[16] *Final Safety Analysis Report for the HI-STORM 100 Cask System,* HI-2002444, Rev. 7, Holtec International (US NRC Docket No. 72-1014).

[17] "Characteristics of Spent Fuel, High Level Waste, and Other Radioactive Wastes Which May Require Long-Term Isolation," DOE/RW-0184, U.S. Department of Energy, December 1987.

[18] Three Dimensional Thermal-Hydraulic Analyses for Diablo Canyon Site-specific HI-STORM System Design, HI-2104625, Rev. 1, Holtec International.

10.1 Drawings

The following is a list of the applicable drawings and Engineering Change Orders (ECOs) that were used to generate the MCNP models used in this analysis.

The HI-STORM 100S design was enhanced and as a result the analysis in this report was updated to include the new design. The significant differences between the old design and the new design were the removal of the inner shield shell and compensating change in concrete density and minor changes to the lid. From the exterior of the overpack, these changes are not noticeable. All MCNP calculations were rerun in revision 3 of this report. However, all calculations that used the surface source files utilized the older model. This is acceptable because in these MCNP runs the source is being started on the exterior of the overpack and the outer steel shell of the overpack was unaffected in the design enhancements. Therefore, scattering off the exterior of the overpack is unaffected.

Revision 3 of the HI-STORM 100S drawings introduced a variable height for the body of the overpack. Conservatively, the shorter version of the HI-STORM 100S was analyzed. This shorter version of the HI-STORM 100S was the same overpack configuration that was analyzed in

Reference [10] and therefore this analysis is consistent with HI-STORM FSAR and license amendments.

Drawing Number	Revision Number	Drawing Number	Revision Number
HI-STORM 100S			
3443	3		
HI-STORM 100S – Earlier Design			
3067	0	3074	0
3068	0	3075	0
3070	0	BM-3065	0
3073	0	BM-3066	0
MPC-24			
1395 Sheet 1 of 4	12	1396 Sheet 1 of 6	15
1395 Sheet 2 of 4	10	BM 1478 Sheet 1 of 2	10
1395 Sheet 3 of 4	11	BM 1478 Sheet 2 of 2	13
125-ton HI-TRAC			
1880 Sheet 1 of 10	8	1880 Sheet 7 of 10	8
1880 Sheet 2 of 10	9	1880 Sheet 8 of 10	8
1880 Sheet 3 of 10	8	BM 1880 Sheet 1 of 2	8
1880 Sheet 4 of 10	9	BM 1880 Sheet 2 of 2	6
1880 Sheet 5 of 10	9	ECO 1025-5	1
1880 Sheet 6 of 10	9	ECO 1025-6	0

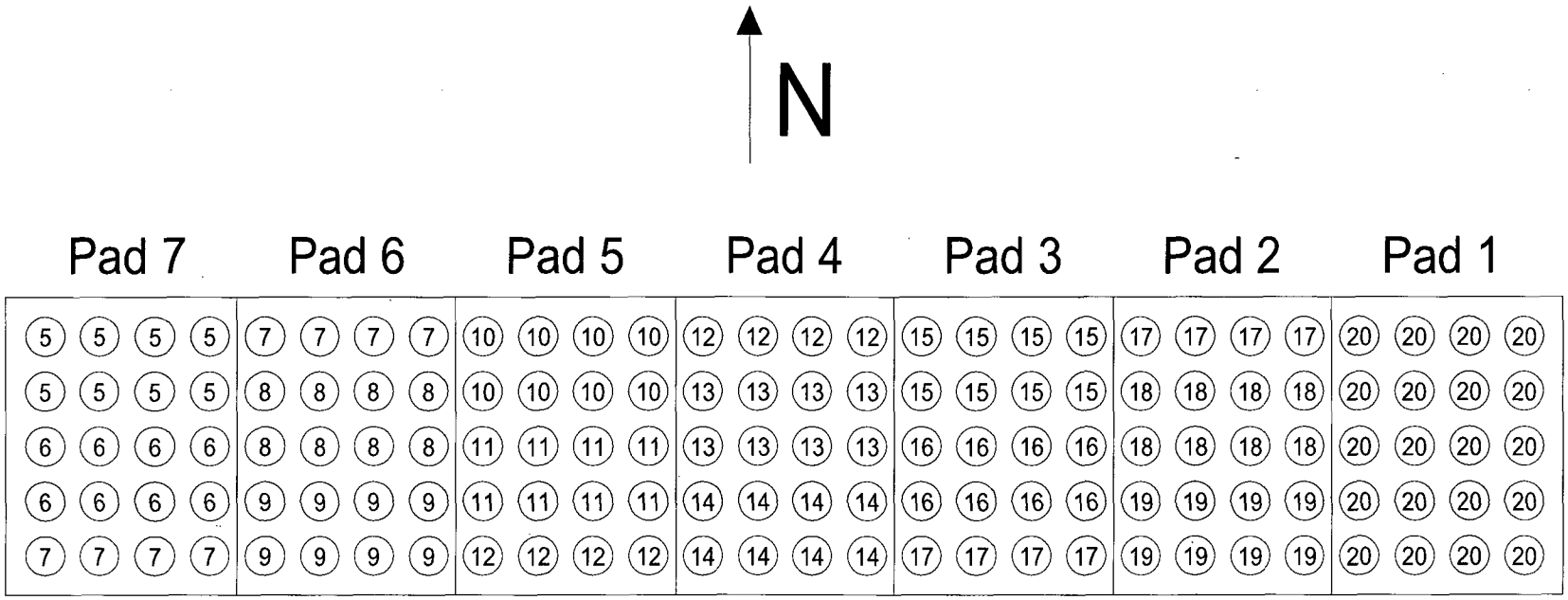

Figure 1: Arrangement of the ISFSI at DCPP with assumed cooling time for each cask position.

PROPRIETARY

Figure 2: The three different MCNP models used in the analysis of the ISFSI at DCPP are depicted above.

Appendix A: Bounding Burnup and Cooling Time for HI-STORM

This appendix determines the bounding MPC with the bounding burnup and cooling time for the HI-STORM analysis.

The following burnup and cooling times were analyzed from the allowable burnup and cooling times. The enrichment used for the analysis is also shown.

MPC	Burnup (MWD/MTU)	Cooling Time (years)	Enrichment (wt.% ^{235}U)
24	41,500	5	3.4
24	45,000	6	4.0
24	50,000	8	4.0
24	52,500	10	4.0
24	55,000	12	4.0
32	32,500	5	2.9
32	37,500	7	3.2
32	45,000	8	4.0

The last burnup and cooling time for the MPC-32 has a conservatively higher burnup for the allowable cooling time of 8 years.

The results presented on the pages that follow are summary results from EXCEL for the dose rate on the surface and one meter away from the side and top of the overpack. A brief description of the format of these pages can be found in Appendix D. The dose locations shown in the left hand column are the same locations that are used in the LAR to the HI-STORM FSAR [10]. The segments listed are the segments on the MCNP surfaces that give the highest dose rate. Appendix D provides a detailed description of the dose locations and presents detailed results for the bounding burnup and cooling time.

The results indicate that the bounding MPC is the MPC-32 with a burnup and cooling time of 32,500 MWD/MTU and 5 year cooling. This combination has the highest dose rate on the radial surface of the cask. The highest dose rate on the top of the cask is achieved with a different burnup and cooling time combination. However, since the contribution to the off-site dose rate from the top of the overpack is a small fraction of the total dose from the overpack, the MPC-32 with 32,500 MWD/MTU and 5 year cooling also produces the highest off-site dose. This is demonstrated in Appendix E.

Appendix B: Bounding Burnup and Cooling Time for the 125-ton HI-TRAC

This appendix determines the bounding MPC with the bounding burnup and cooling time for the HI-TRAC analysis.

The following burnup and cooling times were analyzed from the allowable burnup and cooling times. The enrichment used for the analysis is also shown.

MPC	Burnup (MWD/MTU)	Cooling Time (years)	Enrichment (wt.% ^{235}U)
24	41,500	5	3.4
24	45,000	6	4.0
24	50,000	8	4.0
24	52,500	10	4.0
24	55,000	12	4.0
24	60,000	15	4.5
32	32,500	5	2.9
32	45,000	8	4.0
32	47,500	15	3.6

The second to last burnup and cooling time for the MPC-32 has a conservatively higher burnup for the allowable cooling time of 8 years.

The results presented on the pages that follow are summary results from EXCEL for the dose rate on the surface and one meter away from the side and top of the overpack. The dose locations are described below. A brief description of the format of these pages can be found in Appendix D. The segments listed are the segments on the MCNP surfaces that give the highest dose rate. Appendix J provides a detailed description of the dose locations and presents detailed results for the bounding burnup and cooling time.

The design basis MPC and burnup and cooling time was based on a comparison of the radial dose rates along the outer surface of the HI-TRAC. The combination that had the highest dose rate at the midplane of the cask was chosen as the bounding condition. These results indicate that the bounding MPC is the MPC-24 with a burnup and cooling time of 55,000 MWD/MTU and 12 year cooling. This combination had the highest dose rate on the radial surface of the cask at the midplane while a couple of the other dose locations are slightly higher at other burnup and cooling times.

Dose Locations

Adjacent/ Surface of HI-TRAC	
817	Next to lower water jacket
825	Outer surface of water jacket at peak dose location
(830 831)	Next to lifting trunnion in water jacket cutout area
832	Above water jacket and below top forge
One Meter from HI-TRAC	
829 segment 10	1 meter from outer water jacket at axial height of lower water jacket
829 other segment	1 meter from outer water jacket at peak dose location
(1829 2829)	Next to lifting trunnion in water jacket cutout area at distance of 1 meter from water jacket
829 segment 29	1 meter from water jacket at axial height above water jacket and below top forging

Appendix C: Source Terms

Table 1 shows the fuel characteristics that were used in generating the source terms [4]. Table 2 shows the characteristics of the BPRA [10]. The calculation of the BPRA source is described in reference [14].

Table 1: Fuel Assembly Parameters for Source Term Calculation

Assembly type	B&W 15x15
Active fuel length (in.)	144
No. of fuel rods	208
Rod Pitch (in.)	0.568
Cladding material	Zircaloy-4
Rod diameter (in.)	0.428
Cladding thickness (in.)	0.0230
Pellet diameter (in.)	0.3742
Pellet material	UO_2
Pellet density (gm/cc)	10.412 (95% of theoretical)
Enrichment (wt.% ^{235}U)	2.9 and 4.0
Burnup (MWD/MTU)	32,500 and 55,000
Cooling time (years)	5 to 20
Specific power (MW/MTU)	40

Table 2: Physical Characteristics of BPRA

Region	Mass of material (kg)
Upper end fitting (steel)	2.62
Upper end fitting (inconel)	0.42
Gas plenum spacer (steel)	0.77488
Gas plenum springs (steel)	0.67512
In-core (steel)	13.2

The enrichments that were chosen for this analysis were based on a review of the Diablo Canyon inventory provided in reference [5]. Table 3 shows the average enrichment and median enrichment for different burnup ranges based on the inventory.

Table 3: Enrichments for Various Ranges for Fuel in Diablo Canyon Spent Fuel Pool

Burnup Range GWD/MTU	Average Burnup MWD/MTU	Average Enrichment wt% U235	Median Enrichment wt% U235	Number of Assemblies
15 to 20	17711.10	2.111	2.097	102
20 to 25	22320.33	2.230	2.123	36
25 to 30	27644.82	2.845	2.615	71
30 to 35	32702.12	3.015	3.091	172
35 to 40	37013.26	3.654	3.419	311
40 to 45	42656.28	4.102	4.007	358
45 to 50	46831.56	4.337	4.397	355
50 to 55	51210.40	4.186	4.396	70
55 to 60	55735.82	3.998	3.998	1

Pages C-3 through C-5 show the neutron and gamma source term for 32,500 MWD/MTU.
Pages C-6 through C-8 show the neutron and gamma source term for 55,000 MWD/MTU.
Pages C-9 and C-10 show the cobalt-60 source in the non-fuel hardware for a burnup of 32,500 MWD/MTU.
Pages C-11 and C-12 show the cobalt-60 source in the non-fuel hardware for a burnup of 55,000 MWD/MTU.
Page C-13 shows the cobalt-60 source for the BPRA at a burnup of 40,000 MWD/MTU.

Appendix D: Near Dose Rates for HI-STORM Overpack

This appendix presents the dose rates calculated at the surface and 1 meter from the HI-STORM overpack. This output, which is at the end of this section, is for a burnup and cooling time of 32,500 MWD/MTU and 5-year cooling and is presented in the form of tables printed from EXCEL. A more detailed discussion of the calculations is provided in Section 7.

Some pages have labels "sur" on the far left. These refer to MCNP surfaces. A description of the MCNP surfaces and segmentation are provided before the results.

A brief description of the EXCEL output.

The first two lines are title lines indicating the burnup, enrichment and decay time. The next few lines list the runs from which the data is taken. After the runs, the next line describes which dose component each column represents. The phot(n,p) means photons from neutron interactions in the surrounding material. Phot refers to photons coming from decay of fission products in the fuel region and from decay of cobalt-60 in the in-core grid spacers. Cobalt refers to the cobalt source in the end fittings. The line after the dose components titles the columns value or rel err. The value means dose and the rel err refers to relative error which is defined as the standard deviation over the mean. In order to calculate the standard deviation of a value listed in the value column, one would take the associated rel err number and multiply by the number in the value column. The numbers listed under the total column are total doses. The rel err of the total values are statistically calculated from the standard deviations of the components.

Dose rates from sections of the BPRA located in the active region of the fuel are included in the columns labeled Phot. Dose rates from sections of the BPRA located above the active region are included in the cobalt columns.

Appendix E: Single Cask Dose Rates Versus Distance

The pages in this appendix are the output from the EXCEL files used to analyze the data from the calculations of the configuration 1 geometry. This output is dose versus distance from a single HI-STORM 100 cask. Appendix D describes some of the format of these pages. In all EXCEL pages shown in this appendix, the contribution from BPRAs is included in the photon and cobalt dose components.

Pages E-2 through E-4 of the output are the dose rates in mrem/yr based on a 8760 hour occupancy factor for a burnup of 32,500 MWD/MTU and a cooling time of 5 years. Near the top of the page the number of hours in a year is shown to be 8760.

Pages E-5 through E-7 of the output are the dose rates in mrem/hr. Near the top of the page the number of hours in a year is shown to be 1 which results in mrem/hr.

The output show the dose rate versus distance for particles leaving the top of the overpack and also for particles leaving the side of the overpack. The total dose versus distance is also provided. These results are used in Appendix G to determine the dose rate as a function of the distance from the facility.

Pages E-8 through E-11 of the output are dose rates in mrem/yr based on a 8760 hour occupancy factor for cooling times between 5 years and 20 years. On these pages, only the total dose rates for the top and side of the cask are listed. The curies of cobalt-60 used for the BPRA are shown. The BPRA source was also aged along with the fuel out to a maximum BPRA age of 20 years. Since the BPRAs are assumed to be 13 years at initial loading, the source decreases until the fuel is 12 years old and then the BPRA source was conservatively assumed to remain constant.

Pages E-12 through E-14 compare the dose as a function of distance for the MPCs and burnup and cooling time combinations shown in Appendix A. It is demonstrated that the MPC-32 with a burnup and cooling time of 32,500 MWD/MTU and 5 year cooling bounds the other combinations for side and total dose but not top dose. However since it is bounding for the total dose it was used in the final dose rate calculations presented in Appendix G.

A more detailed discussion of the calculations is provided in Section 7.

Appendix F: Results of Various Overpack Configuration Analyses

PROPRIETARY

Appendix G: Final ISFSI Dose Rate Calculations

PROPRIETARY

Appendix H: Annual Personnel Doses from ISFSI Operations

PROPRIETARY

Appendix I: Dose Rates from a HI-STORM 100S Without a Lid

The pages in this appendix are the output from the EXCEL file used to analyze the data from the calculations of the dose rate as a function of distance from a HI-STORM 100S overpack without a lid. The basic format of these pages is described in Appendix D. The contribution from BPRAs is included in the photon and cobalt dose components and not listed separately.

The dose rate is shown in mrem/hr since the duration for which the HI-STORM overpack will be lidless is relatively small.

As discussed in Section 7.6, the dose rate calculated is only for radiation leaving the top surface of the overpack without a lid. Reference [7] indicates that the distance from the CTF to the controlled area boundary is 1625 feet or 495.3 meters. Conservatively, the dose rate for 450 meters is used as the dose rate at the controlled area boundary.

Appendix J: Dose Rates from the 125-ton HI-TRAC Transfer Cask

The pages in this appendix are the output from the EXCEL file used to analyze the data from the calculations of the dose rate from the 125-ton HI-TRAC transfer cask. The basic format of these pages is described in Appendix D. The contribution from BPRAs is included in the photon and cobalt dose components and not listed separately. The burnup and cooling time analyzed is 55,000 MWD/MTU and 12 year cooling in the MPC-24. This was determined in Appendix B to be the bounding MPC and burnup and cooling time.

The dose rate for all calculations are listed in mrem/hr.

Pages J-3 and J-4 describe the segmentation that was used in MCNP for the axial tallies at different radial locations from the surface of the overpack.

Pages J-5 through J-10 present the results of the HI-TRAC calculations for the condition with water in the water jacket but not in the MPC and with the lid on the HI-TRAC. Page J-11 shows the average dose rate calculated over the axial height of the overpack for surfaces 825, 826, 827, 828, and 829.

Pages J-12 through J-14 present the results of the HI-TRAC calculations for the condition with water in the water jacket but not in the MPC and without a lid on the HI-TRAC. Since this change in the model only affects the upper portion of the cask a limited amount of output is provided.

Pages J-15 through J-17 present the results of the HI-TRAC calculations for the condition with water in the water jacket but not in the MPC, without a lid on the HI-TRAC, and with temporary water shielding above the water jacket. Since this change in the model only affects the upper portion of the cask, a limited amount of output is provided.

Pages J-18 and J-23 present the results for the accident condition of the HI-TRAC transfer cask. In this configuration it is assumed that there is no water in the water jacket and no water in the MPC and the HI-TRAC lid is installed. Pages J-24 through J-26 show the results for the accident configuration including a lead slump of 0.8 inches. The lead was reduced in height below the top forging and below the lifting trunnions. Since the lead slump only affects the upper portion of the cask a limited amount of output is provided.

Page J-27 describes the dose locations on the top and bottom surface of the HI-TRAC.
Page J-28 presents the results for the calculation of the dose rate on the top and bottom of the HI-TRAC. The top lid is in place and the pool lid is in place. Page J-29 presents the results of calculations that modeled 2.5 inches of Holtite-A on the bottom of the pool lid. This assumed thickness represents a portion of the additional shielding that will be provided by the bottom lid for the HI-TRAC during its movement operations. The dose rate are also reported for the top of the HI-TRAC but these are statistically the same as those values reported on Page J-28 since the geometry of the HI-TRAC was not changed in the top portion.

THIS PAGE INTENTIONALLY LEFT BLANK

Appendix K: Occupational Exposures During Loading and Unloading Operations

Pages K-2 through K-4 provide a listing of the loading operations and the occupation exposure as a result of these operations. The dose rate is calculated by multiplying the number of personnel by the dose at the location times the time in the dose field. [

]

In the tables of loading and unloading operations the primary work location is listed. The numbers shown refer to locations in Figure K-1 at the end of this appendix which provides a pictorial representation of the dose locations. The locations shown in the figure are approximate locations. In these tables there are columns indicating cask and MPC conditions during each sequence. An X in the box indicates that the condition is active. An explanation of the conditions can be found at the end of the tables for loading and unloading operations.

Pages K-8 and K-9 provide a listing of the unloading operations and the occupational exposure as a result of the unloading operations. [

]

Appendix L: Effect of Air Composition on Dose Calculations

PROPRIETARY

Appendix M: Comparison of B&W 15x15 and W 17x17 Assemblies

PROPRIETARY

Appendix N: Allowable Burnup and Cooling Times for BPRAs and TPDs

PROPRIETARY

Appendix O: Design Changes and Justification

PROPRIETARY

Appendix P: Site Boundary Dose Calculations for High Burnup Fuels

This appendix reports the site boundary dose rates for high burnup fuel in the HI-STORM 100S overpack containing MPC-32 in the ISFSI at DCPP. The burnup and cooling time combination is conservatively selected from Chapter 5 of Reference [16] and is presented in the following table.

Zircaloy Clad Fuel			
MPC-32	**Burnup (MWD/MTU)**	**Cooling Time (Year)**	**U-235 Enrichment**
	69,000	5	4.8%

Generic HI-STORM system loading restrictions are discussed in Chapter 2 of the HI-STORM 100 FSAR [16]. The analyses account for the increase in cooling time of the fuel in each cask over the years of operation of the facility. The assumption 6 of Section 4 of the main report is used for cooling time distribution in the ISFSI. The distribution of cooling times with the 5 years initial cooling within the ISFSI is shown in Figure 1. High burnup fuel will meet the criteria of HI-STORM 100 CoC Amendment 3. Conservatively the high burnup source term is used for all 140 casks in the DC ISFSI for the direct dose calculations, i.e. the MPCs not loaded with high burnup fuel are conservatively considered to have the same source term.

Detailed discussions of the calculations are provided in Section 7 of the main report. The EXCEL files used for the site boundary dose calculations supporting the approval of the initial DC ISFSI license are presented in Appendices E, F, and G. Same EXCEL files are used for site boundary dose calculations in this Appendix with different burnup, cooling time and enrichment. BPRAs with 13 years initial cooling are used in this calculation as before. All the relevant files are stored on the Holtec Computer Server in directory \projects\1073\eredmond\Rev8.

Consideration of Effluent Dose

The confinement boundary welds of the first 16 MPCs loaded at Diablo were helium leak tested in accordance with ANSI N14.5 to a leak rate of 5.0×10^{-6} std-cc/sec. This criterion is not considered "leaktight" by the ANSI Standard and therefore requires an effluent dose analysis and consideration of that dose for each MPC to the site boundary limit. The effluent dose for these 16 MPCs is reported in Reference [8] and is not repeated in this Appendix.
Going forward, the confinement boundary welds of the MPCs (both the fabrication welds made in the manufacturing facility and in the field) will be helium leakage tested to the "leaktight" criteria of ANSI N.14.5-1997 with the exception of the lid-to-shell (LTS) weld as discussed below. In accordance with ANSI N14.5-1997, if all welds are tested to the "leaktight" criteria the entire confinement boundary is considered "leaktight", i.e. the leak rates from each weld do not have to be summed and compared to the leaktight criterion. The LTS weld is a large, multi-pass weld which is placed and inspected in accordance with ISG-15; therefore in accordance with ISG-18, leakage from this weld is considered non-credible. Since all confinement boundary welds of the MPCs after the first 16 loaded will either be tested to "leaktight" criterion or

considered to have no-credible leakage, no additional effluent dose needs to be considered other than stated above for the first 16 MPCs.

The DC ISFSI FSAR Section 4.3.3.3.2 indicates that the MPC remains intact during all postulated accident conditions, including those resulting in increased internal pressure of the MPC. Additionally, Reference [18] also supports the existing conclusion in Chapter 8 of DC ISFSI FSAR for the revised conditions. Therefore since no design basis event will cause a breach of the MPC additional effluent dose due to accidents does not need to be considered for any MPC.

PWR Neutron Source Assemblies [16]

Neutron source assemblies (NSAs) are used in reactors for startup. During in-core operations, the stainless steel and inconel portions of the NSAs become activated, producing a significant amount of Co-60. Reference [17] provides the masses of steel and inconel for the NSAs. Using these masses it was determined that the total activation of a primary or secondary source is bound by the total activation of a BPRA (see Table 5.2.31 of Reference [16]). Therefore, storage of NSAs is acceptable and a detailed dose rate analysis using the gamma source from activated NSAs is not performed.

Antimony-beryllium sources are used as secondary (regenerative) neutron sources in reactor cores. The Sb-Be source produces neutrons from a gamma-n reaction in the beryllium, where the gamma originates from the decay of neutron-activated antimony. The very short half-life of ^{124}Sb, 60.2 days, however results in a complete decay of the initial amount generated in the reactor within a few years after removal from the reactor. The production of neutrons by the Sb-Be source through regeneration in the MPC is orders of magnitude lower than the design-basis fuel assemblies. Therefore Sb-Be sources do not contribute to the total neutron source in the MPC.

Primary neutron sources (californium, americium-beryllium, plutonium-beryllium and polonium-beryllium) are usually placed in the reactor with a source-strength on the order of 5E+08 n/s. This source strength is similar to, but not greater than, the maximum design-basis fuel assembly source strength listed in Tables 5.2.15 and 5.2.16 of Reference [16].

By the time NSAs are stored in the MPC, the primary neutron sources will have been decaying for many years since they were first inserted into the reactor (typically greater than 10 years). For the ^{252}Cf source, with a half-life of 2.64 years, this means a significant reduction in the source intensity; while the ^{210}Po-Be source, with a half-life of 138 days, is virtually eliminated. The ^{238}Pu-Be and ^{241}Am-Be sources, however, have a significantly longer half-life, 87.4 years and 433 years, respectively. As a result, their source intensity does not decrease significantly before storage in the MPC. Since the ^{238}Pu-Be and ^{241}Am-Be sources may have a source intensity similar to a design-basis fuel assembly when they are stored in the MPC, only a single NSA is permitted for storage in the MPC. Since storage of a single NSA would not significantly increase the total neutron source in an MPC, storage of NSAs is acceptable and detailed dose rate analysis of the neutron source from NSAs is not performed.

For ease of implementation in the LAR, the restriction concerning the number of NSAs is being applied to all types of NSAs. In addition, conservatively NSAs are required to be stored in the inner region of the MPC basket as specified in Section 2.1.9 of Reference [16].

Instrument Tube Tie-Rods (ITTR)

ITTRs, which are installed after core discharge and do not contain radioactive materials, may also be stored in the assembly. ITTRs are authorized for unrestricted storage in an MPC.

The pages in this appendix are the neutron, gamma, Co-60 source terms and output from the EXCEL files used to analyze the site boundary dose for DCPP. The outputs are dose versus distance from a single HI-STORM 100 cask, overpack configurations 2 and 3 as described in Section 3, and the entire ISFSI. Appendix D describes some of the format of these pages.

Dose Rates from the 125-Ton HI-TRAC

This section discusses the dose rates from the HI-TRAC using the burnup and cooling time combinations from Reference [16]. Note that there are no regulatory obligations for dose rates adjacent to and 1 meter from the HI-TRACs for both normal and accident conditions. Nevertheless, these dose rates are calculated to estimate the occupational dose rates during the HI-TRACs loading and unloading operations and to comply with the ALARA principles. As there are no regulatory obligations, conservatively the representative dose rates from Reference [16] are presented here. Table P.1 [16] provides dose rates adjacent to and one meter from the 125-ton HI-TRACs loaded with MPC-24. The dose rates presented in Table P.1 are for an upper bound burnup and low cooling time, so that the dose rates are bounding. The actual dose rates would be lower than the numbers presented in Table P.1. Additional dose rates information for the HI-TRACs for both normal and accident conditions can be found in the HI-STORM FSAR [16]. The results for the HI-TRACs loaded with the MPC-32 can be estimated from the MPC-24 results in Table P.1 by multiplying with the ratio of assemblies in corresponding MPCs. This methodology of estimating the dose rates for the HI-TRACs loaded with MPC-32 is consistent with this calculation package. This is slightly conservative, as it neglects the increased self-shielding within the MPC-32. HI-TRAC contribution at the site boundary is estimated by scaling the HI-TRAC dose rate at 1 meter (dose point location 2 in Table P.1 is used for this purpose) by the dose rates reduction obtained for HI-STORM between 1 and 400 meters (the site boundary is at 426.72 meter). This yields approximately 3.22E-01 mrem/year at the site boundary for HI-TRAC assuming loading of 8 casks per year with 12 hrs of HI-TRAC operation outside the fuel handling building per cask loaded.

Table P.1
Dose rates from the 125-ton HI-TRAC for normal conditions
MPC-24 design basis zircaloy clad fuel
75,000 MWD/MTU and 5-year cooling

Dose Point Location	Fuel Gammas (mrem/hr)	(n,γ) Gammas (mrem/hr)	^{60}Co Gammas (mrem/hr)	Neutrons (mrem/hr)	Totals (mrem/hr)	Totals with BPRAs (mrem/hr)
ADJACENT TO THE 125-TON HI-TRACs						
1	6.32	61.85	100.63	415.90	584.70	585.42
2	113.33	183.20	0.01	287.94	584.49	600.36
3	1.41	6.55	62.26	663.65	733.88	753.59
4	41.57	8.40	340.67	767.94	1158.58	1274.01
4 (outer)	4.84	6.00	42.31	16.11	69.26	83.45
5 (pool)	54.77	3.67	454.56	2883.53	3396.53	3404.24
5 (transfer)	65.81	4.78	601.40	440.29	1112.28	1117.76
ONE METER FROM THE 125-TON HI-TRACs						
1	14.93	24.68	12.90	68.44	120.95	122.99
2	50.47	59.39	0.52	98.23	208.61	215.68
3	5.66	13.95	12.58	61.07	93.26	98.17
4	11.54	2.03	82.02	79.09	174.68	202.33
5 (transfer)	25.98	0.92	290.76	76.26	393.92	396.85

Notes:

- Refer to Figures 5.1.2 and 5.1.4 of Reference [16] for dose locations.
- Dose location 4(outer) is the radial segment at dose location 4 which is 18-24 inches from the center of the overpack.
- Dose rate based on no water within the MPC. For the majority of the duration that the HI-TRAC pool lid is installed, the MPC cavity will be flooded with water. The water within the MPC greatly reduces the dose rate.

[

]

THIS PAGE IS PROPRIETARY

THIS PAGE IS PROPRIETARY

THIS PAGE IS PROPRIETARY

THIS PAGE IS PROPRIETARY

THIS PAGE IS PROPRIETARY

THIS PAGE IS PROPRIETARY

THIS PAGE IS PROPRIETARY

THIS PAGE IS PROPRIETARY

THIS PAGE IS PROPRIETARY

THIS PAGE IS PROPRIETARY

THIS PAGE IS PROPRIETARY

THIS PAGE IS PROPRIETARY

THIS PAGE IS PROPRIETARY

THIS PAGE IS PROPRIETARY

THIS PAGE IS PROPRIETARY

THIS PAGE IS PROPRIETARY

THIS PAGE IS PROPRIETARY

THIS PAGE IS PROPRIETARY

THIS PAGE IS PROPRIETARY

THIS PAGE IS PROPRIETARY

THIS PAGE IS PROPRIETARY

THIS PAGE IS PROPRIETARY

THIS PAGE IS PROPRIETARY

THIS PAGE IS PROPRIETARY

Attachment A
List of Approved Computer Codes

HOLTEC
INTERNATIONAL

Holtec Center, 555 Lincoln Drive West, Marlton, NJ 08053
Telephone (856) 797- 0900
Fax (856) 797 - 0909

THREE DIMENSIONAL THERMAL-HYDRAULIC ANALYSES FOR DIABLO CANYON SITE-SPECIFIC HI-STORM SYSTEM DESIGN

FOR

PG&E

Holtec Report No: HI-2104625

Holtec Project No: 1073

Sponsoring Holtec Division: HTS

Report Class : SAFETY RELATED

HOLTEC INTERNATIONAL

DOCUMENT ISSUANCE AND REVISION STATUS[1]

DOCUMENT NAME:	THREE DIMENSIONAL THERMAL-HYDRAULIC ANALYSES FOR DIABLO CANYON SITE-SPECIFIC HI-STORM SYSTEM DESIGN		
DOCUMENT NO.:	HI-2104625	CATEGORY: ☐	GENERIC
PROJECT NO.:	1073	☑	PROJECT SPECIFIC

Rev. No.[2]	Date Approved	Author's Initials	VIR #
3	1/19/2011	A.Mohammad	561214

DOCUMENT CATEGORIZATION

In accordance with the Holtec Quality Assurance Manual and associated Holtec Quality Procedures (HQPs), this document is categorized as a:

☑ Calculation Package[3] (Per HQP 3.2)

☐ Technical Report (Per HQP 3.2) (Such as a Licensing Report)

☐ Design Criterion Document (Per HQP 3.4)

☐ Design Specification (Per HQP 3.4)

☐ Other (Specify):

DOCUMENT FORMATTING

The formatting of the contents of this document is in accordance with the instructions of HQP 3.2 or 3.4 except as noted below:

DECLARATION OF PROPRIETARY STATUS

☑ Nonproprietary ☐ Holtec Proprietary ☐ Privileged Intellectual Property (PIP)

This document contains extremely valuable intellectual property of Holtec International. Holtec's rights to the ideas, methods, models, and precepts described in this document are protected against unauthorized use, in whole or in part, by any other party under the U.S. and international intellectual property laws. Unauthorized dissemination of any part of this document by the recipient will be deemed to constitute a willful breach of contract governing this project. The recipient of this document bears sole responsibility to honor Holtec's unabridged ownership rights of this document, to observe its confidentiality, and to limit use to the purpose for which it was delivered to the recipient. Portions of this document may be subject to copyright protection against unauthorized reproduction by a third party.

Notes

1. This document has been subjected to review, verification and approval process set forth in the Holtec Quality Assurance Procedures Manual. Password controlled signatures of Holtec personnel who participated in the preparation, review, and QA validation of this document are saved on the company"s network. The Validation Identifier Record (VIR) number is a random number that is generated by the computer after the specific revision of this document has undergone the required review and approval process, and the appropriate Holtec personnel have recorded their password-controlled electronic concurrence to the document.

2. A revision to this document will be ordered by the Project Manager and carried out if any of its contents including revisions to references is materially affected during evolution of this project. The determination as to the need for revision will be made by the Project Manager with input from others, as deemed necessary by him.

3. Revisions to this document may be made by adding supplements to the document and replacing the fTable of Contentsf, this page and the fRevision Logf.

TABLE OF CONTENTS

Section		Page
	PREFACE	ii
1.0	INTRODUCTION	1
2.0	INPUTS	7
3.0	METHODOLOGY	8
4.0	ACCEPTANCE CRITERIA	9
5.0	ASSUMPTIONS	11
6.0	COMPUTER CODES	12
7.0	CALCULATIONS AND RESULTS	13
8.0	REFERENCES	14

Appendix A: Holtec Approved Computer Program List (Total 7 pages)

Appendix B: Thermal Analysis of MPC-32 in HI-STORM SA System (Total 46 pages)

Appendix C: Thermal Analysis of MPC-32 in HI-TRAC (Total 19 pages)

Appendix D: MPC-32 Free Volume Calculations (Total 3 pages)

Appendix E: HI-TRAC Fire Event Calculations (Total 5 pages)

SUMMARY OF REVISIONS

Revision 0: Original Revision.

Revision 1: The following changes are made to the report.

- A mesh sensitivity study is performed for HI-STORM 100SA System to obtain a converged grid.
- All the off-normal and accident conditions are updated based on the converged grid temperature solution.
- A steady state thermal evaluation is performed with credit for the increased molecular weight of the cavity gases to calculate the cavity pressure during the 100% rod ruptures accident.
- Thermal evaluations are performed for both normal storage and transfer conditions with two different sets of MPC decay heat loads.
- All the pressure tables are updated to incorporate the changes due to change in the MPC cavity temperatures.

- HI-STORM in CTF calculations are revised with the Diablo Canyon maximum heat load.
- Free volume calculations are revised.
- The thermal expansion calculations during normal conditions of storage are revised.

All the changes in the report are marked by revision bars.

Revision 2: Incorporated client comments. The off-normal temperature limits are made consistent with Diablo Canyon SAR Rev. 3. All the changes in the report are marked by revision bars.

Revision 3: The footnotes in Appendix B are fixed and an editorial change was made in Section 4.0 of the main text of the report.

PREFACE

This work product has been labeled a *safety-significant* document in Holtec's QA System. In order to gain acceptance as a *safety significant* document in the company's quality assurance system, this document is required to undergo a prescribed review and concurrence process that requires the preparer and reviewer(s) of the document to answer a long list of questions crafted to ensure that the document has been purged of all errors of any material significance. A record of the review and verification activities is maintained in electronic form within the company's network to enable future retrieval and recapitulation of the programmatic acceptance process leading to the acceptance and release of this document under the company's QA system. Among the numerous requirements that a document of this genre must fulfill to muster approval within the company's QA program are:

- The preparer(s) and reviewer(s) are technically qualified to perform their activities per the applicable Holtec Quality Procedure (HQP).
- The input information utilized in the work effort must be drawn from referencable sources. Any assumed input data is so identified.
- All significant assumptions, as applicable, are stated.
- The analysis methodology, if utilized, is consistent with the physics of the problem.
- Any computer code and its specific versions that may be used in this work has been formally admitted for use within the company's QA system.
- The format and content of the document is in accordance with the applicable Holtec quality procedure.
- The material content of this document is understandable to a reader with the requisite academic training and experience in the underlying technical disciplines.

Once a safety significant document produced under the company's QA System completes its review and certification cycle, it should be free of any materially significant error and should not require a revision unless its scope of treatment needs to be altered. Except for regulatory interface documents (i.e., those that are submitted to the NRC in support of a license amendment and request), revisions to Holtec *safety-significant* documents to amend grammar, to improve diction, or to add trivial calculations are made only if such editorial changes are warranted to prevent erroneous conclusions from being inferred by the reader. In other words, the focus in the preparation of this document is to ensure accuracy of the technical content rather than the cosmetics of presentation.

In accordance with the foregoing, this Calculation Package has been prepared pursuant to the provisions of Holtec Quality Procedures HQP 3.0 and 3.2, which require that all analyses utilized in support of the design of a safety-related or important-to-safety structure, component, or system be fully documented such that the analyses can be reproduced at *any time in the future* by

a specialist trained in the discipline(s) involved. HQP 3.2 sets down a rigid format structure for the content and organization of Calculation Packages that are intended to create a document that is complete in terms of the exhaustiveness of content. The Calculation Packages, however, lack the narrational smoothness of a Technical Report, and are not intended to serve as a Technical Report.

Because of its function as a repository of all analyses performed on the subject of its scope, this document will require a revision only if an error is discovered in the computations or the equipment design is modified. Additional analyses in the future may be added as numbered supplements to this Package. Each time a supplement is added or the existing material is revised, the revision status of this Package is advanced to the next number and the Table of Contents is amended. Calculation Packages are Holtec proprietary documents. They are shared with a client only under strict controls on their use and dissemination.

This Calculation Package will be saved as a Permanent Record under the company's QA System.

1.0 INTRODUCTION

The HI-STORM System consists of three major cask components: a multipurpose canister (MPC), a storage overpack (HI-STORM) and a transfer cask (HI-TRAC). Pacific Gas and Electric (PG&E) uses the HI-STORM 100SA System at an Independent Spent Fuel Storage Installation (ISFSI) at the Diablo Canyon nuclear power plant site. The purpose and function of each of these major HI-STORM System components at the DC ISFSI is described in a site-specific 10 CFR 72 (Part 72) license [1] and a supporting site-specific Safety Analysis Report (SAR) [2].

The HI-STORM System, used at the Diablo Canyon site, consists of an MPC-32 placed inside the cavity of a HI-STORM 100SA overpack. The overpack is a layered cylindrical structure engineered with openings at the top and bottom for air ventilation. The MPC consists of a fuel basket inside a sealed and helium pressurized stainless steel vessel. The basket design is a matrix of square compartments designed to hold the fuel assemblies in a vertical position. The basket is a honeycomb structure of alloy steel plates with full-length edge-welded intersections to form an integral basket configuration. The basket interior cell walls are provided with neutron absorber plates (Metamic) sandwiched between the box wall and a stainless steel sheathing plate to cover the full length of the active fuel region.

The HI-STORM System is designed for long-term storage of Spent Nuclear Fuel (SNF). In this report calculations supporting the thermal evaluation of HI-STORM 100SA System, using the methodologies approved in Revision 7 of Holtec's generic HI-STORM FSAR [5], are documented. The HI-STORM 100SA thermal evaluation adopts NUREG-1536 [3] and ISG-11 guidelines [4] to demonstrate safe storage of Commercial Spent Fuel (CSF). These guidelines are stated below:

1. The fuel cladding temperature for long term storage shall be limited to 400°C (752°F).
2. The fuel cladding temperature for short-term operations shall be limited to 400°C (752°F) for high burnup fuel and 570°C (1058°F) for low burnup fuel.
3. The fuel cladding temperature should be maintained below 570°C (1058°F) for off-normal and accident conditions.

4. The internal pressure of the cask should remain within its design pressures for normal, off-normal, and accident conditions.
5. The cask materials should be maintained within their minimum and maximum temperature criteria under normal, off-normal, and accident conditions.
6. The HI-STORM System should be passively cooled.

The purpose of this calculation package is to document calculations supporting evaluation of the HI-STORM 100SA System under normal, short-term operations, off-normal and accident conditions, in compliance with the methodology approved in the HI-STORM 100 FSAR [5]. All conditions, viz. long term normal, off-normal and accident conditions, are evaluated using 3-dimensional thermal models articulated in Chapter 4 of the HI-STORM 100 FSAR [5]. The short term operations in a HI-TRAC 125D transfer cask are also evaluated using 3-dimensional thermal models. Licensing drawings for the modified HI-STORM 100SA System components [B-7 to B-9, C-6] provide all of the component dimensional details. Table 1.3 presents a listing of the primary changes, made to the generic Holtec component designs to yield the DC ISFSI designs, which can affect thermal performance. The following are the principal differences between the Diablo Canyon HI-STORM 100SA System and the generic HI-STORM 100 System, which impacts the thermal performance or requires considerations for specific thermal evaluations:

1. HI-STORM 100SA System has shortened MPC and HI-TRAC
2. HI-STORM 100SA loading operations are performed in an underground Cask Transfer Facility (CTF) and a separate thermal evaluation is required for this scenario.

1.1 Description of the HI-STORM 100SA System

The HI-STORM 100SA System is a large ventilated concrete overpack having an internal cavity for emplacement of a canister (MPC) containing Spent Nuclear Fuel (SNF). For long-term storage the MPC-32 and its contained SNF is situated inside a vertically oriented overpack. Prior to its emplacement in the HI-STORM, the MPC-32 internal space is pressurized with helium.

The HI-STORM Overpack is equipped with four large ducts at each of its bottom and top extremities. The design of the system includes an annular gap between the MPC-32 and the overpack cylindrical cavity. The ducted overpack construction, together with an engineered annular space between the MPC-32 cylinder and the HI-STORM cavity enables cooling of the MPC-32 external surfaces by natural ventilation.

The MPC-32 consists of a fuel basket having an array of square shaped fuel cells for storing spent nuclear fuel. The fuel basket and the stored fuel are enclosed in an all welded pressure boundary formed by a MPC-32 baseplate, top lid and a cylindrical shell. The interior space is required to be pressurized with helium. For this purpose the MPC-32 is initially backfilled with helium up to design-basis pressures listed in Table 1.1 for two different heat load scenarios listed in Section 1.4. This ensures an adequate helium pressure[1] to support MPC-32 internal heat transfer and also provides a stable, inert environment for long-term storage of SNF. The pressurized helium environment together with certain features engineered in the MPC-32 design described next render a very effective means of heat dissipation in the MPC-32 space by internal convection. The fuel basket design includes top and bottom plenums formed by flow holes (cut outs at the top and bottom of the basket walls to allow helium circulation) at the base and top of basket walls. Between the fuel basket and the MPC-32 shell is the downcomer space that connects to the top and bottom plenums. In this manner, the MPCs feature a fully connected helium space consisting of the fuel basket cells, top and bottom plenums and a peripheral downcomer gap.

It is apparent from the geometry of the MPC-32 that the basket metal, the fuel assemblies and its contained helium will be at their peak temperature at or near the longitudinal axis of the MPC-32. As a result of conduction along the metal walls and radiant heat exchange from the fuel assemblies to the MPC-32 metal mass the temperatures will attenuate with increasing radial distance from the axis, reaching their lowest values in the downcomer space. As a result the bulk temperatures of the helium columns in the fuel basket are elevated above the bulk temperature of the downcomer space. Since two fluid columns with different temperatures in communicative

[1] MPC absolute pressure under normal operating conditions is specified for two different heat loads in Section 1.4.

contact cannot remain in static equilibrium, the temperature field guarantees the incipience of heat transfer by internal convection.

1.2 Normal Long Term Storage, Off-Normal and Accident Conditions

Normal long term storage refers to the condition when a fully loaded MPC resides in the HI-STORM at rest in its designated storage location on the ISFSI pad, after all on-site handling and transfer operations are completed. Off-normal conditions and accident conditions are also evaluated as required by NUREG 1536 and HI-STORM FSAR [5]. Thermal evaluations of these conditions are performed using the USNRC approved methodology [5]. The methodology includes credit for internal MPC convection heat transfer has been developed and it has been successfully employed by Holtec for licensing spent fuel casks by the USNRC (Dockets 72-1014 (HI-STORM) and 72-17 (Trojan Nuclear Plant)) and Spain's regulatory authority CSN (Jose Cabrera Nuclear Plant). These evaluations are documented in Appendix B of this report.

1.3 Short Term Operations

Prior to placement in a HI-STORM overpack, an MPC-32 must be loaded with fuel, outfitted with closures, dewatered, dried, backfilled with helium and transferred to a HI-STORM module. In the unlikely event that the fuel needs to be returned to the spent fuel pool, these steps must be performed in reverse. Finally, if required, transfer of a loaded MPC-32 between HI-STORM overpacks or between a HI-STAR transport overpack and a HI-STORM storage overpack must be carried out in an assuredly safe manner. All of the above operations are short duration events that would likely occur no more than once or twice for an individual MPC-32.

The device central to performing the above short-term operations is the HI-TRAC 125D transfer cask. The HI-TRAC 125D transfer cask is a short-term host for the MPC-32; therefore it is necessary to establish that during all thermally challenging operations, the temperature limits for short-term operations are not exceeded. To ensure maximum fuel cooling the HI-TRAC transfer operations are conducted in the vertical orientation. In this manner the internal convection cooling in the MPC-32 is preserved and the fuel temperatures minimized. The

following discrete thermal scenarios involving the HI-TRAC transfer cask are evaluated:

i. Loaded MPC-32 transfer in the HI-TRAC
ii. HI-TRAC Accidents – Water Jacket Loss and Fire

The HI-TRAC thermal evaluations are presented in Appendices C, D and E of this report.

The HI-STORM loading in the Cask Transfer Facility (CTF) is also a short-term operation and is evaluated in Appendix B of this report.

1.4 Design Heat Loads

The HI-STORM 100SA is evaluated for the following decay heat scenarios:

	Q (kW)	**Storage Pattern†**	**Operating Pressure (atm)**	**Reference**
Scenario 1	28.74	Uniform, X=1	5	[1, 2]
Scenario 2	36.9	Regionalized, X=0.5	7	[5]

The existing thermal analysis in the current DC ISFSI license [2] indicate that uniform loading of 28.74kW yields the highest cask system component and contents temperature and the highest MPC internal pressures. Therefore, only Scenario 1 provides the worst case fuel cladding temperatures for the conditions allowed by DC ISFSI license. Based on the thermal evaluations presented and approved in the HI-STORM FSAR [5], a decay heat load of 36.9 kW with regionalized scheme described in [5] results in worst case fuel cladding temperatures and cavity pressures. Therefore, of all the heat load scenarios specified in [5], Scenario 2 is the most limiting and hence is the only scenario among the ones discussed in [5] that is evaluated in the current report.

1.5 Design Ambient Conditions

To evaluate the effects of ambient conditions on the HI-STORM 100SA System, the following temperatures are defined:

† The parameter X is defined in Reference 5.

(a) Normal Temperature

For evaluating the effect of ambient temperatures on long-term storage of SNF, a normal storage temperature defined as the annual average temperature of air is specified. Likewise, for including heat dissipation from HI-STORM bottom, an annual average soil temperature is specified.

(b) Off-Normal & Accident Temperatures

For evaluating the effects of temperature excursions, an Off-Normal and Accident temperature defined as a 72-hour average air temperature is specified. The 72-hour average temperature used in the definition of the off-normal temperature recognizes the considerable thermal inertia of the HI-STORM 100SA storage system, which minimizes the effect of undulations in instantaneous temperature on the storage of SNF. It is recognized that daily site temperatures may exceed the temperatures specified herein. However, for thermal evaluations to remain bounding, the time-averaged ambient temperatures specified herein must not be exceeded.

A reasonably bounding set of ambient temperatures are defined in Table 1.2 and adopted in the thermal evaluation for all design-basis analyses. It is to be noted that the ambient temperatures used in the thermal evaluations are those established for the HI-STORM 100 System, which bound the DC ISFSI conditions.

2.0 INPUTS

Inputs specific to individual calculations are documented within the calculations presented in the appendices. The global inputs define the key thermal hydraulic characteristics of an MPC loaded with Design Basis Fuel (DBF) for MPC-32 (W-17x17) [5].

The MPC is characterized by the following effective properties:

a) Fuel storage cell planar and axial conductivities
b) Fuel density and specific heat
c) Axial flow resistances

The effective properties and axial flow resistances are consistent with HI-STORM 100 FSAR [5]. Material properties reported in the HI-STORM 100 FSAR [5] are used.

3.0 METHODOLOGY

The methodologies used in all the analyses for HI-STORM 100SA documented in this report are identical to those described in the HI-STORM 100 FSAR [5]. Pressure calculations are similar to those of the HI-STORM 100 FSAR, but include additional characterization for IFBA [6], as was done in the thermal calculations reviewed by the NRC for the current Diablo Canyon ISFSI license [1]. The methodology for thermal analyses of an MPC-32 placed in the HI-STORM 100SA is described in Appendix B of this report. All the storage conditions in HI-STORM 100SA overpack are evaluated using 3-dimensional thermal models articulated in Chapter 4 of HI-STORM 100 FSAR [5]. Appendix C describes the thermal analysis of HI-TRAC transfer cask. The thermal model developed for the HI-TRAC transfer cask is also three-dimensional. Such a methodology has been adopted (i.e. 3D thermal models for HI-TRAC) in recent applications to USNRC (HI-STORM FW Docket No. 72-1032).

4.0 ACCEPTANCE CRITERIA

The thermal-hydraulic performance of the HI-STORM 100SA System must satisfy the following criteria:

- The fuel cladding temperatures should be below the ISG-11 Rev. 3 temperature limit for all scenarios.
- For Scenario 2 listed in Section 1.4, all the component temperature and MPC internal pressure must satisfy the requirements of Holtec generic licensing documents [5].
- For Scenario 1 listed in Section 1.4, all component temperature and MPC internal pressure must satisfy the requirements of the DC ISFSI SAR [2], with the following exceptions:

  A. The normal long-term storage concrete temperature limit has been increased to 300°F. An increase in the maximum normal storage temperature of concrete from 200°F to 300°F was incorporated into the HI-STORM FSAR Revision 2. The basies for the change were two reports [10] and [11]. These references provided previous research and testing to support the long-term temperature limit of 300°F. The change in the limit was permitted as long as dolomite was not used as one of the coarse aggregate materials. Holtec concrete placement procedures have incorporated these requirements since 2005. PG&E will need to ensure that their HI-STORM concrete placement procedure includes approved requirements for obtaining concrete that meet the 300°F long term limit. A review of the DC ISFSI specific design and analysis have verified that concrete properties are consistent with concrete allowed within the new limit for the design life of the components.

  B. The accident temperature limit for all the HI-STORM overpack steel is increased to 800°F. This change was proposed in HI-STORM 100 License Amendment Request 1014-3 [8] and approved by the NRC in the Safety Evaluation Report for Amendment #5 to Certificate of Compliance 72-1014 (ML082030122).

  C. The accident temperature limit for Holtite in the HI-TRAC lid is increased from 300°F to 350°F. This change was proposed in a supplement to HI-STORM 100 License Amendment Request 1014-2 [9] and approved by the NRC in the Safety Evaluation Report for Amendment #2 to Certificate of Compliance 72-1014 (ML051580522). The creation of a short-term temperature limit for Holtite-A

which is used only in the HI-TRAC 125 transfer cask, is based on test data summarized in [7]. This report was submitted to the NRC in May, 2003 on Docket 71-9261.

5.0 ASSUMPTIONS

The HI-STORM 100SA thermal analysis employs an array of conservatisms to conservatively predict the fuel, MPC and overpack temperatures. For HI-STORM 100SA System thermal evaluation a numbered list of conservatisms is provided in Appendix B. The principal assumptions that maximize HI-TRAC computed temperatures are stated in the thermal modeling discussions in Appendix C.

6.0 COMPUTER CODES AND FILES

FLUENT Version 6.3.26 computer code is used in the HI-STORM 100SA thermal calculations. The input/output files used in the HI-STORM and HI-TRAC analyses are presented in the individual appendices.

7.0 RESULTS AND CONCLUSIONS

All the calculations and results pertaining to the evaluation of normal, off-normal and accident conditions of HI-STORM 100SA System are reported in Appendix B of this report. The thermal analyses of HI-TRAC System are reported in Appendix C of this report. The Diablo Canyon specific storage system meets the requirements for processing and storing high-burnup fuel at the existing maximum cask heat load of 28.74 kW. However, a supplemental cooling system is required for the HI-TRAC containing high burnup fuel.

8.0 REFERENCES

[1] Materials License No. SNM-2511 Amendment 1, Docket 72-26, dated 10 February 2010.

[2] "Diablo Canyon Independent Spent Fuel Storage Installation Final Safety Analysis Report," Revision 3, March 2010.

[3] NUREG-1536, "Standard Review Plan for Dry Cask Storage Systems," U.S. Nuclear Regulatory Commission, January 1997.

[4] Interim Staff Guidance 11 (ISG-11), "Cladding Considerations for the Transportation and Storage of Spent Fuel", U.S. nuclear Regulatory Commission, Revision 3.

[5] "Final Safety Analysis Report for the HI-STORM 100 Cask System", Holtec Report HI-2002444, Revision 7.

[6] "Evaluation of IFBA Fuel Storage in the HI-STORM System," Holtec Position Paper DS-265, Revision 1.

[7] "Holtite A: Development History and Thermal Performance data", Holtec Report HI-2002396, Revision 3.

[8] Holtec Letter 5014612, dated December 22, 2006.

[9] Holtec Letter 5014490, dated August 6, 2003.

[10] Carette and Malhorta, "Performance of Dolostone and Limestone Concretes at Sustained High Temperatures," Temperature Effects on Concrete, ASTM STP 858.

[11] Schneider and Horvath, "Behaviour of Ordinary Concrete at High Temperature," Vienna Technical University – Institute for Building Materials and Fire Protection, Research Report Volume 9.

Table 1.1

MPC-32 HELIUM BACKFILL PRESSURE SPECIFICATIONS

Scenario*	Item	Specification
Scenario 1	Minimum Gauge Pressure	202.0 kPa @ 21.1°C Reference Temperature [29.3 psig @ 70°F Reference Temperature]
	Maximum Gauge Pressure	229.5 kPa @ 21.1°C Reference Temperature [33.3 psig @ 70°F Reference Temperature]
Scenario 2	Minimum Gauge Pressure	292.9 kPa @ 21.1°C Reference Temperature [42.5 psig @ 70°F Reference Temperature]
	Maximum Gauge Pressure	313.6 kPa @ 21.1°C Reference Temperature [45.5 psig @ 70°F Reference Temperature]

* The scenarios are listed in Section 1.4 of this report.

Table 1.2

DESIGN AMBIENT TEMPERATURES[Note 1]

Normal Temperatures Ambient Soil	 80°F 77°F
Off-Normal Ambient Temperature	100°F for 3 days
Accident Ambient Temperature	125°F for 3 days
Short Term Operation Ambient Temperature	80°F
Note 1: The temperatures tabulated herein are reasonably bounding values. Although not expected, these temperatures maybe minimally exceeded without exceeding the fuel temperature limits.	

Table 1.3

PRIMARY DESIGN DIFFERENCES BETWEEN GENERIC HI-STORM 100S VERSION B SYSTEM AND DIABLO CANYON HI-STORM 100SA SYSTEM

MPC	
Overall Height	Reduced by 9 inches
Internal Cavity Height	Reduced by 9 inches
Fuel Basket Height	Reduced by 14 inches
Closure Lid	1-7/8" × 5" C-channels mounted on bottom surface
HI-STORM Overpack	
Overall Height	Same as 100S-229
Internal Cavity Height	Same as 100S-218
Inlet Duct Height	Increased by 7 inch
Inlet Duct Width	Reduced by 3 inch
MPC Base Support	Increased by 14 inch
Duct Debris Screens	Changed from screen to perforated plate
Annulus Channels	Replaced by small guide plates
HI-TRAC Transfer Cask	
Overall Height	Reduced by 9 inches

Appendix A

Holtec Approved Computer Program List
(Total 7 pages)

HOLTEC APPROVED COMPUTER PROGRAM LIST **REV. 145 November 24, 2010**

PROGRAM (Category)	APPROVED IN USNRC PART 50 & 71/72 SER: (List docket #)	VERSION (Executable)	CERTIFIED USERS FOR "A" CODES	CODE EXPERT	REMARKS: See report indicated for specific limitations	OPERATING SYSTEM & VERSION (Service pack)	APPROVED COMPUTERS: Listed by ID	Indicate Computer ID(s) used
ANSYS (A)	DOC 50-298 DOC 72-1014	11.0	SPA, AB, CWB, RJ, PK, AL, HP, VRP, ER, IR, AIS, ZY, JZ	CWB	HI-2012627	Windows XP (2)	1017, 1018, 1019, 1039, 1060	
		12.0	SPA, AB, CWB, RJ, PK, AL, HP, VRP, ER, IR, AIS, ZY, JZ	CWB	HI-2012627	Windows XP (2)	1016, 1017	
		12.1	SPA, AB, CWB, RJ, PK, AL, HP, VRP, ER, IR, AIS, ZY, JZ	CWB	HI-2012627	Windows XP (2)	1019	
						Windows 7	1021, 1031, 1044	
CASMO (A)	DOC 50-271 DOC 71-9336	4 - 2.05.14	SPA, DMM, BDB, VIM, KB, SF, ES	SPA	HI-2104750	Windows XP (3)	1006	
		5M - 1.06.00	SPA, DMM, BDB, VIM, KB, SF, ES	SPA	HI-2104750	Windows XP (2)	1008	
Fluent (A)	DOC 50-368 DOC 72-	4.56	ER, IR, DMM, AHM, YL, INP	ER	HI-981921	Windows XP (2,3)	1016, 1022	

PROGRAM (Category)	APPROVED IN USNRC PART 50 & 71/72 SER: (List docket #)	VERSION (Executable)	CERTIFIED USERS FOR "A" CODES	CODE EXPERT	REMARKS: See report indicated for specific limitations	OPERATING SYSTEM & VERSION (Service pack)	APPROVED COMPUTERS: Listed by ID	Indicate Computer ID(s) used
	1014	6.3.26	ER, IR, DMM, AHM, YL, INP	DMM	HI-2084036	Windows XP (2,3)	1001, 1002, 1003, 1016, 2003	1002 1003
						Red Hat Enterprise Linux (2.6.9-5)	1004	
LS-DYNA 3D (A)	DOC 50-298 DOC 72-1014	971 (ls971sR4.2)	SPA, VRP, KPS, AIS, JZ	JZ	N/A	Windows XP (2)	1018	
		971 (ls971sR5.0)	SPA, VRP, KPS, AIS, JZ	JZ	N/A	Windows 7	1032	
		971 (mpp971dR5.0)	SPA, VRP, KPS, AIS, JZ	JZ	N/A	Windows Server HPC 2008	1033, 1034, 1035, 1036, 1037	

PROGRAM (Category)	APPROVED IN USNRC PART 50 & 71/72 SER: (List docket #)	VERSION (Executable)	CERTIFIED USERS FOR "A" CODES	CODE EXPERT	REMARKS: See report indicated for specific limitations	OPERATING SYSTEM & VERSION (Service pack)	APPROVED COMPUTERS: Listed by ID	Indicate Computer ID(s) used
		971 (mpp971s R5.0)	SPA, VRP, KPS, AIS, JZ	JZ	N/A	Windows Server HPC 2008	1033, 1034, 1035, 1036, 1037	
MCNP (A)	DOC 50-368 DOC 71-9336	4A	SPA, DMM, BDB, SF, ES, VIM, KB	KB	HI-2104750	Windows XP (2,3)	1006, 1008, 1009, 1010, 2001, 2002, 2004, 2005, 2006, 2007	
						Windows 7	1011, 1013, 1014, 1015, 1030, 1051	

PROGRAM (Category)	APPROVED IN USNRC PART 50 & 71/72 SER: (List docket #)	VERSION (Executable)	CERTIFIED USERS FOR "A" CODES	CODE EXPERT	REMARKS: See report indicated for specific limitations	OPERATING SYSTEM & VERSION (Service pack)	APPROVED COMPUTERS: Listed by ID	Indicate Computer ID(s) used
		5.1.40	SPA, DMM, BDB, SF, ES, VIM, KB	KB	HI-2104750	Windows XP (2,3)	1006, 1008, 1009, 1010, 1012, 2001, 2002, 2004, 2005, 2006, 2007	
						Windows 7	1011, 1014, 1015	

PROGRAM (Category)	APPROVED IN USNRC PART 50 & 71/72 SER: (List docket #)	VERSION (Executable)	CERTIFIED USERS FOR "A" CODES	CODE EXPERT	REMARKS: See report indicated for specific limitations	OPERATING SYSTEM & VERSION (Service pack)	APPROVED COMPUTERS: Listed by ID	Indicate Computer ID(s) used
		5.1.51	SPA, DMM, BDB, SF, ES, VIM, KB	KB	HI-2104750	Windows XP (2,3)	1006, 1008, 1009, 1010, 2001, 2002, 2003, 2005, 2006, 2007	
						Windows 7	1014, 1015, 1051	
SCALE: Modules ORIGEN-S & SAS2H	DOC 50-346 DOC 71-9336	4.3	N/A	KB	N/A	Windows 2000 (2)	1050	
		4.4	N/A	KB	N/A	Windows XP (2,3)	1006, 1009, 1010, 2004, 2005, 2007	
Visual	DOC 50-133	2004	N/A	AIS,	N/A	Windows XP (2)	1017	

HOLTEC APPROVED COMPUTER PROGRAM LIST							REV. 145 November 24, 2010	
PROGRAM (Category)	**APPROVED IN USNRC PART 50 & 71/72 SER: (List docket #)**	**VERSION (Executable)**	**CERTIFIED USERS FOR "A" CODES**	**CODE EXPERT**	**REMARKS: See report indicated for specific limitations**	**OPERATING SYSTEM & VERSION (Service pack)**	**APPROVED COMPUTERS: Listed by ID**	**Indicate Computer ID(s) used**
Nastran	DOC 72-27			CWB		Windows 7	1044, 1045	

Appendix B

Thermal Analysis of MPC-32 in HI-STORM 100SA System
(Total 46 pages)

B.1 INTRODUCTION

In this appendix, thermal evaluations of MPC-32 fuel basket placed in HI-STORM 100SA system using three-dimensional CFD models are presented. These 3-D thermal models incorporate the 3-zone flow resistance model articulated in a companion Holtec report [B-1]. Normal storage analyses are performed for two different scenarios listed in Section 1.4. Off-normal and accident analyses are also performed and results are presented in this appendix.

B.2 METHODOLOGY AND ASSUMPTIONS

One of the central objectives in the design of the HI-STORM 100SA system is to ensure that all SNF discharged from the reactor and not yet loaded into dry storage systems can be stored in a HI-STORM 100SA MPC. The methodology used in the all of the analyses documented in this appendix are identical to those described in the USNRC approved HI-STORM 100 FSAR [B-2]. To ensure an adequate representation of the features of MPC-32, fuel basket within MPC-32 and the HI-STORM 100SA system, a quarter-symmetric 3-D geometric model of the MPC is constructed using the FLUENT CFD code pre-processor (Gambit) [B-3], as shown in Figure B.2.2. Transport of heat from the heat generation region (fuel assemblies) to the outside environment (ambient air or ground) is analyzed broadly using three-dimensional models. The 3-D models implemented to analyze the HI-STORM 100SA system have the following key attributes:

1. The interior of the MPC is a 3-D array of square shaped cells inside an irregularly shaped basket outline confined inside the cylindrical space of the MPC cavity.
2. The fuel bundle inside the fuel cell for the PWR fuel assemblies are replaced by an equivalent porous media using the flow impedance properties computed using a rigorous (CFD) approach [B-1]. The equivalent effective thermal properties of the porous medium are the same as that used in Reference B-2.
3. The internals of the MPC cavity, including the basket cross-section, bottom flow holes and plenums are modeled explicitly.
4. The stainless steel plates in the MPC basket wall have Metamic panels and sheathing attached [B-7]. The arrangement of metal layers results in the composite wall having

different thermal conductivities in the in-plane (parallel to panel) and out-of-plane (perpendicular to panel) directions. The effective thermal properties of the basket sandwich are consistent with the values used in the thermal evaluations supporting Reference B-2.

5. **[PROPRIETARY**

]

6. The inlet and outlet vents in the HI-STORM 100SA overpack are modeled explicitly as shown in Figure B.2.2.
7. The model includes all three modes of heat transfer – conduction, convection and radiation.
8. For including MPC internal convection heat transfer, the benchmarked solution methodologies described in a Holtec topical report [B-6] is employed. The helium flow within the MPC is modeled as laminar.
9. Surface to surface thermal radiation heat transfer is modeled **[PROPRIETARY**

   ] in FLUENT.

10. The airflow through the annular space between the MPC and the overpack is modeled as **[PROPRIETARY**] to incorporate the effect of air turbulence on the systems thermal performance. This model is approved by USNRC for HI-STORM 100 [B-2].
11. Insolation on the outer surface of HI-STORM 100SA is conservatively based on the 12-hour levels prescribed in 10CFR71 averaged on a 24-hours basis.
12. The flow resistance of Westinghouse 17x17 fuel assemblies calculated using rigorous CFD methods [B-1] are used in the thermal analyses. **[PROPRIETARY**

]

A cross-section of the 3-D model of the HI-STORM 100SA system loaded with an MPC-32 is illustrated in Figure B.2.1. The 3-D model has the following major assumptions that render the results conservative.

1) The fuel bundles are generating heat at the limiting heat loads defined in Section 1.4 of this report.
2) Axial dissipation of heat by the fuel pellets is neglected.
3) Axial dissipation of heat by radiation in the fuel bundle is neglected.
4) The most severe environmental factors for long-term normal storage - ambient temperature of 80°F and 10CFR71 insolation levels - were coincidentally imposed on the system.
5) The thermosiphon effect in the MPC-32, which is intrinsic to the HI-STORM 100SA fuel basket design, is included in the thermal analyses.
6) For simplicity, the MPC basket flow holes are modeled as rectangular openings with understated flow area.
7) The absorbtivity of the external surfaces of the HI-STORM 100SA is assumed to be equal to 1.0. The emissivity of the painted carbon steel surface is set as 0.85, which is an approved and conservative value.
8) No credit is taken for contact between fuel assemblies and the MPC basket wall or between the MPC basket and the basket supports. The fuel assemblies and MPC-32 basket are conservatively considered to be in concentric alignment.
9) The fuel assembly length is conservatively modeled to be equal to the fuel basket length. This is conservative because it maximizes the flow resistance of the fuel region. However, the length of the active fuel is modeled exactly the same as the active fuel height of a Westinghouse 17x17 fuel assembly.
10) To understate MPC internal convection heat transfer, the MPC helium pressure[1] is understated. The minimum operation pressure, 7 atm absolute, is set as the operation pressure

[1] MPC absolute pressure is 7 atm (min.) under normal operating conditions (design heat load and normal ambient temperature).

for Scenario 2 in Section 1.4 while it is set as 5 atm absolute for Scenario 1 in Section 1.4. During accident conditions, the MPC pressure is higher than this minimum MPC absolute pressure. Conservatively, the higher pressure is not credited in the thermal evaluations of the accidents.

11) Heat dissipation by fuel basket peripheral supports is neglected.

12) The MPC-32 free volume for pressure calculations is conservatively understated by using bounding volume of basket supports and fuel weight.

13) The CTF is a steel cylinder backed by concrete. **[PROPRIETARY**

]

B.3 INPUT DATA

The principal input data for the thermal-hydraulic evaluations of the MPC-32 placed in HI-STORM 100SA overpack, used in these analyses, are taken from design drawings [B-7, B-8, B-9 and B-10]. The input data used for the simulation of the Multi-purpose Canister (MPC) and the fuel assemblies, stored in MPC-32, are obtained from References B-1 and B-2. The physical properties of materials present within the HI-STORM 100SA system, such as carbon steel, stainless steel, concrete, air and helium, are reported in Reference B-2. The effective properties of the fuel and basket composite wall are consistent with the values used in the thermal evaluations supporting the HI-STORM 100 FSAR [B-2]. An MPC internal operating pressure of 7 atmospheres absolute is used in the calculations pertaining to Scenario 2 in Section 1.4, whereas an operating pressure of 5 atmospheres absolute is used for the DC ISFSI licensed heat load (Scenario 1 in Section 1.4). The design ambient temperature used in the analysis is 80°F. The bottom of the HI-STORM 100SA overpack base is assumed supported on a subgrade at 77°F [B-2]. 10CFR71 insolation levels were coincidentally imposed on the system

The fuel assembly axial burnup distribution used in the analysis is provided in Reference B-2. Surface emissivity data for key materials of construction are also provided in Reference B-2. The emissivity properties of painted external surfaces are generally excellent. In the HI-STORM 100SA thermal analysis, an emissivity of 0.85 is applied to painted surfaces. A solar absorptivity coefficient of 1.0 is applied to all exposed overpack surfaces. Literature data on the surface emissivity of stainless steel material are widely available. Values as high as 0.80 [B-12] have been reported in the literature. Conservatively, a lower value of 0.587 [B-4], which is typical of oxidized stainless steel, has been used for plate, and an even lower value of 0.36 [B-4] has been used for machined forgings in these evaluations.

The spent fuel assemblies inside fuel storage cells are modeled as a homogeneous porous media. Separate CFD calculations are performed to determine the pressure drop characteristics for flow of helium through the fuel assemblies and the fuel basket. The inputs to the FLUENT CFD model to simulate the pressure drop through the porous media are detailed in Reference B-1. The HI-STORM 100SA system is evaluated for different heat load scenarios as specified in Section 1.4 of the main report.

B.4 COMPUTER PROGRAM AND FILES

The computer code FLUENT Version 6.3.26 [B-3] is used in these thermal calculations. A list of computer files supporting the bounding (licensing basis) calculations is provided below.

GAMBIT

```
Directory of G:\Projects\1073\REPORTS\Thermal Reports\HI-STORM\gambit

09/16/2010  03:18 PM      259,686,400    DC-HI-STORM-finest-CTF-28.74kw.dbs
09/16/2010  03:21 PM      210,680,792    DC-HI-STORM-finest-CTF-28.74kw.msh
04/15/2010  02:31 PM      180,355,072    DC-HI-STORM-SPACER.dbs
04/15/2010  02:30 PM       87,598,673    DC-HI-STORM-SPACER.msh
05/20/2010  10:15 AM      179,306,496    DC-HI-STORM.dbs
05/20/2010  10:19 AM       88,313,369    DC-HI-STORM.msh
06/15/2010  04:24 PM      187,695,104    DC-HI-STORM-fine.dbs
06/15/2010  04:23 PM      102,146,459    DC-HI-STORM-fine.msh
06/15/2010  08:51 PM      188,743,680    DC-HI-STORM-finer.dbs
06/15/2010  08:53 PM      107,679,695    DC-HI-STORM-finer.msh
06/16/2010  01:41 PM      210,763,776    DC-HI-STORM-finest.dbs
06/16/2010  01:40 PM      147,665,477    DC-HI-STORM-finest.msh
```

FLUENT

Normal Onsite Storage

```
Directory of G:\Projects\1073\REPORTS\Thermal Reports\HI-STORM\fluent\steady-
state

04/20/2010  05:07 PM        50,692,154    DC-HI-STORM-X=0.5.cas
03/24/2010  03:12 PM       821,838,647    DC-HI-STORM-X=0.5.dat
```

HI-STORM in CTF (Scenario 1)

```
Directory of G:\Projects\1073\REPORTS\Thermal Reports\HI-STORM\fluent\steady-
state

09/20/2010  10:16 AM       118,935,523    DC-HI-STORM-finest-CTF-28.74kw.cas
09/17/2010  08:40 AM     1,815,636,840    DC-HI-STORM-finest-CTF-28.74kw.dat
```

Sensitivity Study of Fuel Spacer

```
Directory of G:\Projects\1073\REPORTS\Thermal Reports\HI-STORM\fluent\steady-
state

04/20/2010  05:15 PM        50,258,200    DC-HI-STORM-SPACER.cas
04/15/2010  08:21 PM       815,209,407    DC-HI-STORM-SPACER.dat
```

Grid Sensitivity Studies

```
Directory of G:\Projects\1073\REPORTS\Thermal Reports\HI-STORM\fluent\Grid
Sensitivity

06/18/2010  08:49 AM        57,927,518    DC-HI-STORM-FINE-36.9kw.cas
06/18/2010  04:56 AM       914,718,131    DC-HI-STORM-FINE-36.9kw.dat
06/18/2010  02:13 PM        60,833,242    DC-HI-STORM-FINER-36.9kw.cas
06/18/2010  02:14 PM       952,338,328    DC-HI-STORM-FINER-36.9kw.dat
06/17/2010  04:06 PM        83,170,154    DC-HI-STORM-FINEST-36.9kw.cas
06/17/2010  03:45 PM     1,310,907,908    DC-HI-STORM-FINEST-36.9kw.dat
```

Lower Heat Load (Scenario 1)

```
Directory of G:\Projects\1073\REPORTS\Thermal Reports\HI-STORM\fluent\
Q=28.74kw

06/21/2010  08:10 AM        83,170,123    DC-HI-STORM-FINEST-28.74kw.cas
06/21/2010  08:11 AM     1,310,907,908    DC-HI-STORM-FINEST-28.74kw.dat
```

100% Fuel Rod Rupture

```
Directory of G:\Projects\1073\REPORTS\Thermal Reports\HI-STORM\fluent\100pct-
rod-rupture

06/24/2010  08:41 AM        83,170,495    DC-HI-STORM-FINEST-36.9kw-100RR.cas
06/24/2010  02:07 AM     1,310,907,908    DC-HI-STORM-FINEST-36.9kw-100RR.dat
```

Partial Duct Blockage (Off-Normal)

```
Directory of G:\Projects\1073\REPORTS\Thermal Reports\HI-STORM\fluent\Partial
-Duct-Blocked

09/15/2010  05:11 PM        50,692,011    DC-HI-STORM-PDB.cas
09/15/2010  05:11 PM       821,798,979    DC-HI-STORM-PDB.dat
```

All Ducts Blocked (Accident)

Directory of G:\Projects\1073\REPORTS\Thermal Reports\HI-STORM\fluent\All-Ducts-Blocked

04/19/2010	07:06 PM	842,216,181	DC-HI-STORM-ADB-115200.dat
04/13/2010	08:47 AM	50,691,505	DC-HI-STORM-ADB.cas

Fire (Accident)

Directory of G:\Projects\1073\REPORTS\Thermal Reports\HI-STORM\fluent\fire

04/15/2010	11:41 AM	841,772,997	DC-HI-STORM-fire-240.dat
04/21/2010	09:57 AM	50,693,126	DC-HI-STORM-fire.cas
05/13/2010	08:19 PM	841,790,858	DC-HI-STORM-postfire-111600.dat
04/17/2010	09:26 PM	841,811,399	DC-HI-STORM-postfire-1800.dat
04/19/2010	08:03 AM	841,811,399	DC-HI-STORM-postfire-3600.dat
05/04/2010	02:52 PM	50,692,318	DC-HI-STORM-postfire.cas

UDF

Directory of G:\Projects\1073\REPORTS\Thermal Reports\HI-STORM\fluent

03/04/2010	06:05 PM	2,407	udf-diablo-X=0.5.c
09/15/2010	05:24 PM	2,689	udf-diablo-28.74kw.c

MISCELLANEOUS

Directory of G:\Projects\1073\REPORTS\Thermal Reports\HI-STORM

12/14/2010	02:05 PM	15,872	heat-gen-rate.xls
12/06/2010	05:05 PM	38,400	mpc_pres_R1.xls

B.5 RESULTS AND CONCLUSIONS

B.5.1 Normal Long-Term Storage Temperatures

B.5.1.1 Initial Evaluation

Initial calculations were performed using a baseline mesh (see section B.5.1.2 below for mesh sensitivity studies) for Scenario 2 defined in Section 1.4 of the main report. The storage scenario was adopted for grid sensitivity studies (Section B.5.1.2). The temperatures of all the components of the MPC and HI-STORM 100SA from the normal storage baseline mesh evaluation are reported in Table B.5.2 and are below their temperature limits [B-2].

B.5.1.2 Grid Sensitivity Studies

The HI-STORM 100SA is engineered with flow passages to facilitate heat dissipation by ventilation action. During fuel storage ambient air is drawn from intake ducts by buoyancy forces generated by the heated column of air in the HI-STORM annulus. The upward moving air extracts heat from the MPC external surfaces by convection heat transfer. As the vast majority of the heat is removed by annulus air flow, the adequacy of the grid deployed to model annulus flow and heat transfer must be confirmed.

The grid discretization of the MPC spaces and the HI-STORM/MPC annulus region must be sufficient to insure a grid-independent solution. Because the flow field in the annulus is in the turbulent transition regimes, the grid size and distribution are critical to insuring a converged solution. The mesh sensitivity study was accordingly performed on the annulus region outside the MPC and the grid size in the axial direction within the MPC. All the mesh sensitivity analyses were carried out for the 36.9 kW design maximum heat load (Scenario 2 in Section 1.4).

B.5.1.2.1 HI-STORM Annulus Radial Mesh Distribution Studies

The HI-STORM 100SA annulus grid sensitivity results are tabulated below. [**PROPRIETARY**]Three different grids are generated to study the effect of mesh refinement

in the annulus region on the predicted temperatures. The table below summarizes the mesh used and the result obtained.

Mesh	Number of Radial Cells	y^+	PCT (°C)	Permissible Limit (°C)	Clad Temperature Margin (°C)
Baseline					
Fine					
Finer					

Note 1: The y^+ reported in the third column above is a measure of grid adequacy provided by the FLUENT code. Values of y^+~1 indicate an adequate level of mesh refinement is reached to resolve the viscosity affected region near the wall.

[PROPRIETARY

]

As can be seen from the above table, the thermal solution is sensitive to the grid density in the annulus region. The above results show that finer mesh is reasonably converged. Having obtained grid convergence in the annulus region, the finer mesh is adopted for further grid sensitivity studies below.

B.5.1.2.2 Fuel Region Axial Mesh Studies

In addition to employing the finer mesh in the annulus region, the fuel region axial mesh density was also increased. A summary of these studies is provided below:

Mesh	Number of Axial Cells	PCT (°C)	Permissible Limit (°C)	Clad Temperature Margin (°C)
Finer	60	385	400	15
Finest	100[Note 1]	387	400	13

Note 1: As explained below the finest grid is adopted for thermal evaluation of the HI-STORM 100SA.

The above results show that the solution is essentially unchanged by further grid refinement in the axial direction.

B.5.1.2.3 Applying the Results of the Grid Sensitivity Studies

Based on the above results, finest grid layout is adopted for the normal storage thermal analysis of the HI-STORM 100SA. The temperatures of all the components of the MPC and HI-STORM

100SA for the finest mesh are reported in Table B.5.2 and are compared with the baseline mesh results. The temperature difference due to mesh refinement is also reported in Table B.5.2. The finest mesh was used in the analysis of HI-STORM in the CTF under Scenario 1 conditions.

To address the effect of grid sensitivity on all the other off-normal and accident conditions, the results for these conditions presented in this report were calculated using baseline mesh and then the temperature adder representing the mesh density studies, as shown in Table B.5.2, were applied. This methodology on the grid sensitivity evaluation is consistent with the methodology supplied to USNRC for mesh studies under HI-STORM FW (Docket No. 72-1032).

B.5.1.3 Thermal Evaluations supporting DC ISFSI License (Scenario 1)*

This evaluation was performed to support the Diablo Canyon ISFSI license that loads up to a uniform heat of 28.74 kW. The finest mesh that results in highest cladding and component temperatures during normal on-site storage is used to evaluate the MPC-32 in HI-STORM 100SA with a uniform heat load of 28.74 kW and a helium backfill of 29.3 psig at 70°F (Table 1.1). This heat load is also based on HI-STORM 100 CoC, Amendments 1 to 4 [B-16]. The operating pressure inside the MPC used in the analysis is 5 atmospheres absolute. The peak cladding temperature result of this evaluation is tabulated in Table B.5.13. The fuel, MPC and HI-STORM component temperatures obtained for Scenario 2 (see Section 1.4) bounds the other decay heat scenario evaluated. Therefore, all the off-normal and accident evaluations presented in this report are performed for this limiting scenario except for the HI-STORM in the CTF condition, which is evaluated for Scenario 1.

B.5.2 Thermal Expansion Computations

In this subsection, thermal expansions of free-standing HI-STORM 100SA components in the radial and axial directions are computed. The calculations address the following thermal expansions:

* See Section 1.4 for Scenario 1.

a) Fuel Basket-to-MPC Radial Growth
b) Fuel Basket-to-MPC Axial Growth
c) MPC-to-Overpack Radial Growth
d) MPC-to-Overpack Axial Growth

(a) Fuel Basket-to-MPC Radial Growth

The two potential points that could be impacted by differential thermal expansion are at the touch points between the basket and the supports (Method 1), and between the corner of the basket and the MPC shell (Method 2). The radial growth of the fuel basket relative to the MPC (δ) upon heating from a 70°F reference temperature (T_o) to storage temperatures is computed by the above mentioned two different methods and is reported as follows:

Method 1:

Method 1 evaluates the thermal expansion between the basket and the basket supports. To determine the limiting thermal expansion it is first necessary to determine the minimum MPC basket internal radius. Since the minimum radius is based on the gap between the basket and the shell, the point A, which is the maximum basket radius, must be determined. The panel at point A is beveled at the edge as shown in the drawing [B-7]. The dimension of the farthest point is calculated as follows:

L = 55.95 in	[B-18]	Maximum cell panel 1B dimension
W = 37.28 in	[B-18]	Maximum width of cells 1-4
C = 0.1875 in	[B-7]	Minimum chamfer dimension

$$R_{max} = \sqrt{\left(\frac{L}{2}\right)^2 + \left(\frac{W}{2} - C\right)^2} = 33.513 \text{ in (Dimension of the farthest point on the basket)}$$

A conservatively lower minimum radial gap between the basket and MPC shell of 0.07 in as compared to 0.08 in [B-19] is used in order to reduce the minimum inner radius of MPC shell and thereby maximizing the differential thermal expansion.

G_{min} = 0.07 in [B-19] (minimum radial gap between the basket and MPC shell, conservatively lower)

R_1 = 28.13 in [B-18] (Half of maximum width of the widest basket panel)

$R_3 = R_{max} + G_{min}$ = 33.583 in (Minimum inner radius of MPC shell)

The configuration of the MPC in the subject area is on the gap between the supports, therefore with the minimum shell radius, the width of the basket support will be:

[PROPRIETARY] [B-19] (Minimum spacing between the supports including the tolerance)

[PROPRIETARY] (Width of basket support)

The temperatures T_1, T_2 and T_3 are obtained from FLUENT case and data file "DC-HI-STORM-FINEST-36.9kw" listed in Section B.4. α_1, α_2 and α_3 are the coefficients of thermal expansion of alloy-X at temperatures T_1, T_2 and T_3 respectively.

$T_0 = 70^oF$ (Reference temperature)
$T_1 = 685^oF$ (Radial average fuel basket temperature along the widest panel i.e. panel 1, at the hottest axial location – see Figure B.5.1)
$T_2 = 580^oF$ (Maximum temperature of the basket support at the hottest axial location)
$T_3 = 464^oF$ (MPC shell temperature at the hottest axial location)

$\alpha_1 = 9.76x10^{-6}\,{}^oF^{-1}$ [B-2]
$\alpha_2 = 9.60x10^{-6}\,{}^oF^{-1}$ [B-2]
$\alpha_3 = 9.28x10^{-6}\,{}^oF^{-1}$ [B-2]

The radial thermal expansion δ is calculated using the equation below:

$$\delta = R_1\alpha_1(T_1 - T_0) + H\alpha_2(T_2 - T_0) - R_3\alpha_3(T_3 - T_0) \quad \text{---------- (Eq. B.5.2)}$$

Substituting in eq. B.5.2, the net thermal expansion is δ = 0.0723 inch. The cold radial gap between the widest panel and basket support is 0.0925 inch (calculated as R_3-R_1-H).

Method 2:

This method is to calculate the net thermal expansion of the farthest point on the basket i.e. point A as shown in Figure B.5.1. The net thermal expansion in this method is calculated based on the combined thermal expansion of Panel 1 and Panel 2 (see Figure B.5.1). The calculations are shown below:

Radial Thermal Expansion of the MPC Shell

$R_3 = 33.583$ in (Minimum inner radius of MPC shell, see Method 1)
$T_3 = 464^oF$ (Maximum MPC shell temperature at the hottest axial location)

$\alpha_3 = 9.28 \times 10^{-6}\ {}^{o}F^{-1}$ [B-2] (coefficient of thermal expansion of alloy-X at temperature T_3)

$\delta_{shell} = R_3\alpha_3(T_3-T_0) = 0.123$ in

Thermal expansion of panel 1

$R_1 = 55.95/2 = 27.975$ in [B-7]

$T_1 = 685^{o}F$ (Radial average fuel basket temperature along the widest panel i.e. panel 1, at the hottest axial location)

$\alpha_1 = 9.76 \times 10^{-6}\ {}^{o}F^{-1}$

$\delta_1 = R_1\alpha_1(T_1-T_0) = 0.1679$ in

Thermal expansion of panel 2

$R_2 = 37.28/2 = 18.64$ in [B-7]

$T_2 = 556^{o}F$ (Radial average fuel basket temperature along panel 2 at the hottest axial location)

$\alpha_2 = 9.5 \times 10^{-6}\ {}^{o}F^{-1}$

$\delta_2 = R_2\alpha_2(T_2-T_0) = 0.0861$ in

All the temperatures are obtained from FLUENT case and data file "DC-HI-STORM-FINEST-36.9kw" listed in Section B.4.

Net thermal expansion of point A

$$\delta_{net} = \sqrt{\delta_1^2 + \delta_2^2}$$

$\delta_{net} = 0.1887$ in

Radial thermal expansion

$$\delta = \delta_{net} - \delta_{shell}$$

The net thermal expansion is $\delta = 0.0655$ inch. The worst case thermal expansion is lower than the minimum radial gap between the fuel basket and MPC shell (i.e. 0.08 inch). Since the radial gap between the basket and MPC is smaller in Method 2, the thermal expansion obtained from Method 2 is reported in Table B.5.3.

(b) Fuel Basket-to-MPC Axial Growth

The axial growth of the fuel basket relative to the MPC (δ_2) upon heating from a 70°F reference temperature to storage temperatures is computed as follows:

$$\delta_2 = H_b\alpha_1[T_1 - T_o] - H_{cav}\alpha_2[T_2 - T_o] \qquad \text{---------- (Eq. B.5.3)}$$

Where:

H_b: Maximum fuel basket height

H_{cav}: Minimum MPC cavity height
α_1, α_2: Coefficients of thermal expansion for fuel basket and MPC shell at T_1 and T_2 respectively for Alloy-X
T_1: Maximum average fuel basket temperature along the axial direction
T_2: Average MPC shell inner surface temperature

For conservatism in computing δ_2, the fuel basket thermal expansion coefficient (α_1) is overstated and that of MPC (α_2) understated. The temperatures T_1 and T_2 are obtained from FLUENT case and data file "DC-HI-STORM-FINEST-36.9kw" listed in Section B.4. The required data for computing δ_1 is provided below:

$\alpha_1 = 9.50*10^{-6}\ {}^{o}F^{-1}$ (Table 3.3.1 [B-2])
$\alpha_2 = 9.10*10^{-6}\ {}^{o}F^{-1}$ (Table 3.3.1 [B-2])
$H_b = 162.625$ in [B-18]
[PROPRIETARY] (Minimum MPC cavity height including the fuel spacer)
[PROPRIETARY] (Maximum height of the fuel spacer)
$H_{cav} = H_2 - H_1 = 163.5625$ in
$T_1 = 515^{o}F$ (conservatively overstated)
$T_2 = 360^{o}F$ (conservatively understated)
$T_o = 70^{o}F$

Substituting the above data in Eq. B.5.3, the fuel basket axial growth is computed as $\delta_2 = 0.256$ in. The cold axial gap between the fuel basket and MPC is 0.9375 in.

c) MPC-to-Overpack Radial Growth

The radial growth of the MPC shell residing in the HI-STORM relative to the overpack upon heating from a 70°F reference temperature to storage temperatures is computed as follows:

$$\theta_1 = R_{shell}\alpha_1(T_1 - T_o) + R_g\alpha_3(T_3 - T_o) - R_{ovp}\alpha_2(T_2 - T_o) \qquad \text{---------- (Eq. B.5.4)}$$

where:

R_{shell}: Maximum MPC shell outer radius
R_{ovp}: Minimum Overpack inner shell inner radius
R_g: Width of guide vanes on the overpack inner shell
α_1, α_2, α_3: Coefficients of thermal expansion for MPC shell, overpack inner shell and guide vanes at T_1, T_2 and T_3 respectively
T_1: Maximum temperature of MPC shell
T_2: Minimum temperature of overpack inner shell
T_3: Maximum temperature of guide vanes

The temperatures T_1, T_2 and T_3 are obtained from FLUENT case and data file "DC-HI-STORM-FINEST-36.9kw" listed in Section B.4. The required data for computing θ_1 is provided below:

R_{shell} = 34.25 in [B-19]
R_{ovp} = 36.5 in [B-20]
D_{min} = 69 in [B-20] Minimum spacing between the guides
$R_g = R_{ovp} - D_{min}/2$ = 2 in
$\alpha_1 = 9.42\text{x}10^{-6}\ {}^{o}F^{-1}$ (Table 3.3.1 [B-2])
$\alpha_2 = 5.53\text{x}10^{-6}\ {}^{o}F^{-1}$ (Table 3.3.2 [B-2])
$\alpha_3 = 6.59\text{x}10^{-6}\ {}^{o}F^{-1}$ (Table 3.3.2 [B-2])
T_1 = 475°F (conservatively overstated)
T_2 = 95°F (conservatively understated)
T_3 = 335°F (conservatively overstated)
T_o = 70°F

Substituting the above data in Eq. B.5.4, θ_1 is computed as 0.129 in. The radial cold gap between the MPC and overpack inner shell is 0.25 in (calculated as $D_{min}/2 - R_{shell}$).

d) MPC-to-Overpack Axial Growth

The axial growth of the MPC shell residing in the HI-STORM relative to the overpack upon heating from a 70°F reference temperature to storage temperatures is computed as follows:

$$\theta_2 = H_{shell}\alpha_1(T_1 - T_o) - H_{ovp}\alpha_2(T_2 - T_o)) \qquad \text{---------- (Eq. B.5.5)}$$

where:

H_{shell}:	MPC shell height
H_{ovp}:	Overpack cavity length
α_1, α_2:	Coefficients of thermal expansion for MPC shell and overpack inner shell at T_1 and T_2 respectively
T_1:	Average temperature of MPC shell outer surface
T_2:	Average temperature of overpack inner shell inner surface

The temperatures T_1 and T_2 are obtained from FLUENT case and data file "DC-HI-STORM-FINEST-36.9kw" listed in Section B.4. The required data for computing θ_2 is provided below:

H_{shell} = 181.3125 in [B-19]
H_{ovp} = 197.5 in [B-20]
$\alpha_1 = 9.21*10^{-6}\ {}^{o}F^{-1}$ (Table 3.3.1 [B-2])
$\alpha_2 = 5.89*10^{-6}\ {}^{o}F^{-1}$ (Table 3.3.2 [B-2])
T_1 = 365°F (conservatively overstated)
T_2 = 235°F (conservatively understated)

$T_o = 70^oF$

Substituting the above data in Eq. B.5.5, θ_2 is computed as 0.301 in. The axial cold gap between the overpack and MPC is 16.1875 in.

The thermal expansion calculation results are summarized in Table B.5.3. All the differential expansions are less than the nominal gap.

B.5.3 MPC-32 Pressure Calculations

In this subsection, cavity pressures within the MPC-32 as a result of heatup from fuel decay heat are computed for the bounding scenario reported in Section B.5.1 (i.e. Scenario 2, finest mesh). The calculations cover the following conditions:

i) Minimum and Maximum MPC helium backfill pressures
ii) Normal long-term storage
iii) Hypothetical rod ruptures

B.5.3.1 MPC-32 Cavity Pressure for Scenario 2

The MPC-32, prior to sealing, is backfilled with helium. The helium backfill must be sufficient to produce an operating pressure (P_o) of 7 atm absolute (102.9 psia) at design basis maximum heat load of 36.9 kW. The required helium backfill pressure is specified as a minimum backfill pressure (P_b) at 70°F reference temperature. P_b is computed from Ideal Gas Law as follows:

$$P_b = \frac{460 + T_b}{460 + T_{cav}} P_o$$

where,

T_b = Reference temperature in °F (21°C (70°F))

T_{cav} = Average MPC cavity temperature at design heat load for normal long-term storage in °F (computed as 257°C (495°F))

Using the above data, the minimum backfill pressure is computed as 42.4 psig. A theoretical upper limit on the helium backfill pressure also exists and is defined by the design pressure (P_d)

of the MPC-32 vessel (114.7 psia [B-2]). To compute the upper limit of helium backfill pressure, the operating pressure P_o is assumed to reach the design pressure (P_d) and P_b defined above is computed. The maximum allowable backfill pressure computes as 49.0 psig. To bound the minimum and maximum backfill pressures with a margin, a helium backfill specification is set forth in Table 1.1 of the main report. Having defined the helium backfill specifications in Table 1.1 and based on fission gases release fractions (NUREG 1536 criteria [B-11]), MPC net free volume and initial fill gas pressure, maximum MPC-32 gas pressures with 1% (normal), 10% (off-normal) and 100% (accident condition) rod rupture are conservatively computed assuming:

1) Helium backfill pressure is at its maximum specified value (Table 1.1)
2) Rod fill gas volume based on IFBA fuel [B-14]
3) Design basis maximum heat load (36.9 kW) [B-2]
4) Design ambient temperatures (Table 1.2)

For hypothetical rod rupture accident condition, MPC-32 pressures are conservatively computed assuming:

1) Bounding fuel burnup (70,000 MWD/MTU) [B-14]
2) 100% of rods fill gas and 30% fission gas release from ruptured fuel rods [B-14]. A concomitant effect of rod ruptures is the increased pressure and molecular weight of the cavity gases with enhanced rate of heat dissipation by internal helium convection and lower cavity temperatures. As these effects are substantial under large rod ruptures, the 100% rod rupture accident is evaluated with due credit for increased heat dissipation under increased molecular weight of the cavity gases. Molecular weight used in the analysis is conservatively understated.
3) Lower bound MPC-32 free volume (Appendix D)
4) PWR non-fuel hardware (BPRA control elements and thimble plugs) are also included in the MPC pressure calculations. The presence of non-fuel hardware increases the effective basket conductivity, thus enhancing heat dissipation and lowering fuel temperatures as well as the temperature of the gas filling the space between fuel rods. The gas volume displaced by the mass of non-fuel hardware lowers the cavity free volume. These two effects, namely, temperature lowering and free volume reduction, have opposing influence on the MPC cavity pressure. The first effect lowers gas pressure while the second effect raises it. In the HI-

STORM 100SA thermal analysis, the computed temperature field (with non-fuel hardware excluded) has been determined to provide a conservatively bounding temperature field. The MPC cavity free space is computed based on volume displacement with non-fuel hardware included. This approach ensures conservative bounding pressures. The pressure calculations assume all the 32 fuel locations to have BPRAs.

Employing the assumptions listed above, MPC-32 pressures (including helium from BPRAs) are computed in the EXCEL spreadsheet "mpc_pres_R1.xls" listed in Section B.4 and results reported in Table B.5.11. The MPC boundary pressures are below the design pressure limits specified in Chapter 2 of Reference B-2.

B.5.3.2 MPC-32 Cavity Pressure for Scenario 1

At the DC ISFSI, the limiting MPC-32 will be loaded with a uniform decay heat load of 28.74 kW [B-16] and a helium backfill conditions consistent with Diablo Canyon FSAR [2]. Based on the methodology described in sub-section B.5.3.1, the helium backfill for MPC-32 loaded upto 28.74 kW and lower, is specified in Table 1.1.

The MPC-32 pressures (including helium from BPRAs) are computed in the EXCEL spreadsheet "mpc_pres_R1.xls" listed in Section B.4 and results reported in Table B.5.14. No credit for increased molecular weight is considered under 100% rod rupture accident event at the lower heat load. The MPC boundary pressures are below the design pressure limits specified both in DC ISFSI SAR [2] and Chapter 2 of Reference B-2.

B.5.4 Off-Normal and Accident Events

This section reports the temperature and pressure during the off-normal and accident events defined in the HI-STORM 100 FSAR. It is to be noted that postulation of 100% rods rupture coincident with off-normal and accident events is not required. It was eliminated because the peak fuel cladding temperatures for the accident conditions never exceed the regulatory accident

temperature limit, which ensures no significant cladding failures would occur. This is consistent with the latest NRC guidance on fuel cladding in dry storage casks [B-5], which states "In order to assure integrity of the cladding material ... For off-normal and accident conditions, the maximum cladding temperature should not exceed 570°C (1058°F)." The same result is confirmed for all accidents evaluated for the DC ISFSI. Therefore, no coincident 100% rod rupture postulations with an accident are evaluated. This is supported by the HI-STORM 100 CoC, Amendment 5.

To support the evaluation of off-normal and accident events defined in the HI-STORM 100 FSAR (Chapter 4, Section 4.6 [B-2]), the following conditions are analyzed:

(a) Off-Normal Pressure

Scenario 1

This condition is defined as an off-normal ambient temperature (Table 1.2 of main report) co-incident with 10% rods rupture for Scenario 1. The maximum helium backfill specified for Scenario 1 in Table 1.1 is used for the calculations reported in this sub-section. The principal effect of an off-normal ambient temperature is an increase of HI-STORM 100SA system temperatures by the difference (Δ) between the off-normal and normal ambient temperatures (Table 1.2 of main report). The effect of rods rupture has a direct effect on increasing the MPC-32 gas density which enhances MPC-32 thermosiphon cooling. For conservatism, effect of gas density increase is ignored and HI-STORM 100SA temperatures obtained by adding Δ to the baseline solution for normal storage conditions. The increased MPC-32 pressure is computed in EXCEL ("mpc_pres_R1.xls" computer file listed in Section B.4) and results are reported in Table B.5.14. The result confirms that the MPC off-normal pressure is below the off-normal design pressure [2].

Scenario 2

This event is defined as a combination of (a) maximum helium backfill pressure (Table 1.1), (b) 10% fuel rods rupture, and (c) limiting fuel storage configuration. The principal objective of the analysis is to demonstrate that the MPC off-normal design pressure is not exceeded. The MPC-32 pressure is computed for Scenario 2 in EXCEL ("mpc_pres_R1.xls" computer

file listed in Section B.4) and results are reported in Table B.5.11. The result confirms that the MPC off-normal pressure is below the off-normal design pressure limit [B-2].

(b) Off-Normal Ambient Temperature

This condition is defined as an off-normal ambient temperature (Table 1.2 of main report). The consequences of this event are bounded by the analysis for Off-Normal Pressure for Scenario 1. The principal effect of an off-normal ambient temperature is an increase of HI-STORM system temperatures by the difference (Δ) between the off-normal and normal temperatures (Table 1.2 of main report). These temperatures are reported in Table B.5.4. All the MPC and HI-STORM 100SA component temperatures are below their temperature limits.

The increased MPC-32 pressure is computed in EXCEL ("mpc_pres_R1.xls" computer file listed in Section B.4) and results are reported in Table B.5.12. The result confirms that the MPC pressure under off-normal ambient temperature is below the off-normal design pressure (specified in DC ISFSI SAR [2]).

(c) Partial Blockage of Air Inlets

This condition is defined as 50% blockage of all the inlet ducts. The resulting decrease in flow area increases the inlet air flow resistance. The effect of increased flow resistance on fuel temperature is analyzed on FLUENT under baseline operation (normal ambient temperature) and bounding heat load of 36.9 kW (Scenario 2).

The fuel cladding, MPC and HI-STORM 100SA component temperatures obtained from the FLUENT simulations are reported in Table B.5.4. All the reported temperatures are below their temperature limits. It is also to be noted that the temperatures remain not only below the off-normal event limits, but the temperatures for all SFSC components remain below their short-term limits for this event. The MPC-32 pressure is computed in EXCEL and is reported in Table B.5.12. The result is below the off-normal design pressure (specified in DC ISFSI SAR [2])

(d) Fire Accidents

The HI-STORM fire accident is evaluated based on the fire conditions specified in Section 4.6 of Reference B-2. Based on NUREG-1536 [B-11] and 10 CFR 71 guidelines [B-15], the following fire parameters are assumed:

1. The average emissivity coefficient on the overpack outer surfaces is 0.9.
2. The average flame temperature is 1475° F (800° C).
3. The fuel source extends horizontally by 1 m (40 in) beyond the external surface of the cask.
4. A conservative forced convection heat transfer coefficient of 4.5 Btu/(hr × ft^2 × ° F) is applied to exposed overpack surfaces during the short-duration fire.
5. No solar insolation is applied during the duration of fire. However, solar insolation is applied after the fire extinguishes i.e. during post-fire conditions.

Based on the 189 liters (50 gallon) fuel volume, HI-STORM 100SA overpack outer diameter (3.3655 m (11.04 ft)) and the 1 m fuel ring width, the fuel ring surrounding the overpack covers 13.715 m^2 (147.62 ft^2) and has a depth of 1.38 cm (0.543 in). From this depth and a linear fuel consumption rate of 0.381 cm/min (0.15 in/min), the fire duration is calculated to be 3.62 minutes (217 seconds). The linear fuel consumption rate of 0.381 cm/min (0.15 in/min) is a lowerbound value from Sandia Report [B-13]. Use of a lowerbound linear fuel consumption rate conservatively maximizes the duration of the fire. However, a transient study is conducted for conservative fire duration of 240 seconds.

Since Scenario 2 listed in Section 1.4 of this report results in the most limiting temperature field, it is adopted as the initial condition for fire accident transient evaluation. The results of this evaluation are presented in Table B.5.5. Post-fire evaluations are continued till temperatures of all the components of MPC and overpack reach their maximum temperatures and begin to recede. The post-fire transient analysis results are summarized in Table B.5.5. The results show that the fuel temperature rise is small. All MPC and overpack components' temperatures remain below temperature limits specified in Reference B-2. Consequently, the

impact on the MPC internal helium pressure will be small and the value is reported in Table B.5.12.

(e) 100% Blockage of Inlet Ducts

This event is defined as a complete blockage of all four bottom inlets. The immediate consequence of a complete blockage of the air inlet ducts is that the normal circulation of air for cooling the MPC-32 is stopped. **[PROPRIETARY**

] As the temperatures of the MPC-32 and its contents rise, the rate of heat rejection will increase correspondingly. Under this condition, the temperatures of the overpack, the MPC-32 and the stored fuel assemblies will rise as a function of time.

This accident condition is a short duration event that will be identified and corrected by scheduled periodic surveillance at the ISFSI site. The worst possible scenario is a complete loss of ventilation air for the period between scheduled surveillances (24 hours). To conservatively evaluate the effect of complete loss of air supply through the bottom inlets, a substantially greater duration blockage (32 hrs) is assumed. The thermal model is same as that constructed for normal storage conditions except for the bottom inlet ducts which are assumed to be impervious to air. Using this blocked duct model, a transient thermal solution of the HI-STORM 100SA System, with the normal storage steady state temperature field as the initial condition, is obtained. The results of the blocked ducts transient analysis are presented in Table B.5.6. The co-incident MPC pressure is also computed and reported in Table B.5.12. The result is confirmed to be below the accident pressure limit (specified in DC ISFSI SAR [2]).

(f) Extreme Ambient Temperature

This event is defined as a substantially elevated temperature 52°C (125°F) that is postulated to persist for a 3-day period (Table 1.2 of main report). To bound the event the evaluation assumes that the extreme temperature persists for a sufficient duration to reach steady state conditions. Using the baseline condition (steady state conditions, normal ambient

temperature 27°C (80°F) and design heat load) the temperatures of the HI-STORM 100SA system are conservatively assumed to rise by the difference between the extreme and normal ambient temperatures 25°C (45°F). The HI-STORM 100SA extreme ambient temperatures computed in this manner are reported in Table B.5.7. The MPC and HI-STORM 100SA temperatures are well below the accident temperature limits.

The co-incident MPC-32 pressure is computed (EXCEL file "mpc_pres_R1.xls" listed in Section B.4) and reported in Table B.5.12. The result is below the accident design pressure limit (specified in DC ISFSI SAR [2]).

(g) Burial Under Debris Accident

At the storage site, no structures are permitted over the casks. Minimum regulatory distances from the storage site to the nearest site boundary precludes close proximity of vegetation. There is no credible mechanism for the HI-STORM 100SA System to become completely buried under debris. However, for conservatism, a complete burial under debris scenario is evaluated.

To demonstrate the inherent safety of the HI-STORM 100SA System, a bounding analysis that considers the debris to act as a perfect insulator is assumed. Under this scenario, the contents of the HI-STORM System will undergo a transient heat up under adiabatic conditions. The minimum available time ($\Delta\tau$) for the fuel cladding to reach the accident limit depends on the following: (i) thermal inertia of the cask, (ii) the cask initial conditions, (iii) the spent nuclear fuel decay heat generation and (iv) margin between the initial cladding temperature and accident temperature limit. To obtain a lowerbound on $\Delta\tau$ the HI-STORM 100SA thermal inertia (item (i)) is understated, the cask initial temperature (item (ii)) is maximized, maximum permissible decay heat (item (iii)) assumed and cladding temperature margin (item (iv)) understated. A set of conservatively postulated input parameters for items (i) through (iv) are summarized in Table B.5.8. Using these parameters $\Delta\tau$ is computed as follows:

$$\Delta\tau = \frac{m \times c_p \times \Delta T}{Q}$$

where:
$\Delta\tau$ = Allowable burial time (sec)
m = Mass of HI-STORM 100SA System (kg)
c_p = Specific heat capacity (J/kg×°C)
ΔT = Permissible temperature rise (°C)
Q = Decay heat load (W)

Substituting the parameters from Table B.5.8, a substantial allowable burial time 188640 sec (52.4 hrs) is obtained for the design basis decay heat load. The burial under debris accident pressure is reported in Table B.5.12 and is below the accident design pressure limit (specified in DC ISFSI SAR [2]).

B.5.5 HI-STORM in Cask Transfer Facility (CTF)

This condition consists of a loaded HI-STORM overpack that cannot be removed from the CTF [B-10] because of a failure of the equipment that lifts the HI-STORM. Under such a condition, the flow of air to the bottom inlet vents would be restricted. A steady state evaluation for this condition has been performed using the 3-D FLUENT CFD model for DC ISFSI heat load i.e. Scenario 1 listed in Section 1.4. For the evaluation of the loaded HI-STORM in the CTF, the diameter of the hypothetical reflecting cylinder that surrounds the cask matches the CTF cylinder inner diameter. An air volume up to a height of 5 feet is modeled above the HI-STORM System. A quarter symmetric 3D model of a HI-STORM placed in the CTF is shown in Figure B.5.2. The results of the analysis of HI-STORM placed in the CTF are reported in Table B.5.9. The fuel cladding temperature and other MPC and overpack temperatures are below their respective short-term temperature limits. Therefore, the HI-STORM can be loaded inside the CTF for an indefinite time for the Diablo Canyon design basis maximum heat load of up to 28.74 kW.

The co-incident MPC-32 pressure is computed (EXCEL file "mpc_pres_R1.xls" listed in Section B.4) and reported in Table B.5.9. The result is below the normal design pressure limit (specified in DC ISFSI SAR [2]).

B.5.6 **[PROPRIETARY**

]

B.5.7 Summary and Conclusions

The results of the evaluations described in the previous sub-sections indicate that the thermal-hydraulic performance of the HI-STORM 100SA System components continues to satisfy all applicable component temperature and MPC internal pressure limits at the existing maximum cask heat load of 28.74 kW. It can therefore be concluded that the HI-STORM 100SA System thermal design is in compliance with 10CFR 72 requirements for Diablo Canyon specific heat load.

B.6 REFERENCES

[B-1] "Pressure Loss Characteristics for In-Cell Flow of Helium in PWR and BWR MPCs", Holtec Report HI-2043285, Revision 7.

[B-2] "Final Safety Analysis Report for the HI-STORM 100 Cask System", Holtec Report HI-2002444, Revision 7.

[B-3] FLUENT Computational Fluid Dynamics Software, Version 6.3.26 (Fluent Inc., 10 Cavendish Court, Lebanon, NH – 03766).

[B-4] "Scoping Design Analyses for Optimized Shipping Casks Containing 1-, 2-, 3-, 5-, 7-, or 10- Year Old PWR Spent Fuel", Oak Ridge National Lab, 1983.

[B-5] "Cladding Considerations for the Transportation and Storage of Spent Fuel", Interim Staff Guidance – 11, U.S. Nuclear Regulatory Commission, Revision 3.

[B-6] "Topical Report on the Thermal Analysis Model for the HI-STAR/HI-STORM Systems and Benchmarking with Full-Size Test Data", Holtec Report HI-992252, Revision 1.

[B-7] "Diablo Canyon MPC-32 Fuel Basket Assembly", Holtec Drawing 4458, Revision 7.

[B-8] "Diablo Canyon Enclosure Vessel", Holtec Drawing 4459, Revision 9.

[B-9] "HI STORM 100SA Assembly", Holtec Drawing 4461, Revision 14.

[B-10] "Underground Cask Transfer Facility", Holtec Drawing 4431, Revision 11.

[B-11] NUREG-1536, "Standard Review Plan for Dry Cask Storage Systems," U.S. Nuclear Regulatory Commission, January 1997.

[B-12] "Nuclear Systems Materials Handbook", Volume 1, Oak Ridge National Laboratory, TID 26666, Volume 1.

[B-13] "Thermal Measurements in a Series of Large Pool Fires", Gregory, J.J., et. al., SAND85-1096, Sandia National Laboratories, Albuquerque, NM, (August 1987).

[B-14] "Evaluation of IFBA Fuel Storage in the HI-STORM System", DS-265, Revision 1.

[B-15] United States Code of Federal Regulations, Title 10, Part 71.

[B-16] HI-STORM 100 CoC, Amendments 1 to 4, USNRC Docket No. 72-1014.

[B-17] HI-STORM 100 CoC, Amendment 5, USNRC Docket No. 72-1014.

[B-18] "Diablo Canyon MPC-32 Fuel Basket", Holtec Drawing 4407, Revision 16.

[B-19] "Diablo Canyon MPC-32 Enclosure Vessel", Holtec Drawing 4408, Revision 19.

[B-20] "HI-STORM 100SA", Holtec Drawing 4425, Revision 16.

Table B.5.1

DELETED

Table B.5.2

BOUNDING HI-STORM 100SA NORMAL STORAGE MPC AND OVERPACK TEMPERATURES (SCENARIO 2)[2]

Component	**Temperature for Baseline Mesh °C (°F)**	**Temperature for Finest Mesh °C (°F)**	**Temperature Change Due to Mesh Refinement °C (°F)**	**Temperature Limit °C (°F)**
Fuel Cladding				400 (752)
MPC Basket				385 (725)
Basket Periphery				385 (725)
MPC Shell				260 (500)
Overpack Inner Shell				177 (350)
Overpack Outer Shell				177 (350)
Lid Bottom Plate				232 (450)
Lid Top Plate				232 (450)
Overpack Body Concrete[3]				149 (300)
Overpack Lid Concrete[3]				149 (300)
Average Air Outlet				-
MPC Cavity Average				-

2 The temperatures reported in this table for the limiting storage Scenario 2 are below the design temperatures specified in Table 2.2.3 of Reference B-2.

3 Maximum section average temperature is reported.

Table B.5.3

HI-STORM 100SA DIFFERENTIAL THERMAL EXPANSIONS DURING LONG TERM NORMAL STORAGE

Gap Description	**Cold Gap (U), (inch)**	**Differential Expansion (V), (inch)**	**Is Free Expansion Criteria Satisfied (i.e. U > V)**
Fuel Basket-to-MPC Radial Gap	0.08	0.0655	Yes
Fuel Basket-to-MPC Axial Gap	0.9375	0.256	Yes
MPC-to-Overpack Radial Gap	0.25	0.129	Yes
MPC-to-Overpack Axial Gap	16.1875	0.301	Yes

Table B.5.4

OFF-NORMAL CONDITION MAXIMUM HI-STORM 100SA TEMPERATURES

Component	Off-Normal Ambient Temperature[4] °C (°F)	Partial Inlet Ducts Blockage[5] °C (°F)	Off-Normal Limit[Note 1] °C (°F)
Fuel Cladding			570 (1058)
MPC Basket			510 (950)
Basket Periphery			510 (950)
MPC Shell			413 (775)
Overpack Inner Shell			204 (400)
Overpack Outer Shell			316 (600)
Lid Bottom Plate			204 (400)
Lid Top Plate			288 (550)
Overpack Body Concrete[6]			177 (350)
Overpack Lid Concrete[6]			177 (350)

Note 1: The off-normal temperature limits of all the components satisfy the more conservative Diablo Canyon specific off-normal temperature limits obtained from [2] in Section 8.0 of this report and therefore the Diablo Canyon limits are listed here.

4 Obtained by adding the difference between off-normal ambient and normal temperature difference (11.1°C (20°F)) to normal condition temperatures (finest mesh) reported in Table B.5.2.

5 The temperatures tabulated herein include the temperature adder reported in Table B.5.2 for all the components.

6 Maximum section average temperature is reported.

Table B.5.5

HI-STORM 100SA FIRE AND POST-FIRE ACCIDENT ANALYSIS RESULTS[7]

Component	**Initial Condition °C (°F)**	**End of Fire Condition °C (°F)**	**Post-Fire Cooldown °C (°F)**	**Time to Reach Maximum Temperature[8]**	**Temperature Limit °C (°F)**
Fuel Cladding				31 hr	570 (1058)
MPC Basket				31 hr	510 (950)
Basket Periphery				31 hr	510 (950)
MPC Shell				240 sec	413 (775)
Overpack Inner Shell				240 sec	427 (800)
Overpack Outer Shell				240 sec	427 (800)
Overpack Body Concrete[9]				1 hr	177 (350)
Overpack Lid Concrete[9]				0.5 hr	177 (350)

7 All the temperatures tabulated herein include the temperature adder reported in Table B.5.2 for all the components.

8 Time starts after the beginning of fire.

9 Maximum section average temperature is reported.

Table B.5.6

RESULTS OF HI-STORM 100SA 32-HOURS BLOCKED INLET DUCTS THERMAL ANALYSIS[10]

Component	**Initial Condition °C (°F)**	**Final Condition °C (°F)**	**Accident Temperature Limit °C (°F)**
Fuel Cladding			570 (1058)
MPC Basket			510 (950)
Basket Periphery			510 (950)
MPC Shell			413 (775)
Overpack Inner Shell			427 (800)
Overpack Outer Shell			427 (800)
Lid Bottom Plate			427 (800)
Lid Top Plate			427 (800)
Overpack Body Concrete[11]			177 (350)
Overpack Lid Concrete[11]			177 (350)

10 All the temperatures tabulated herein include the temperature adder reported in Table B.5.2 for all the components.

11 Maximum section average temperature is reported.

Table B.5.7

EXTREME ENVIRONMENTAL CONDITION MAXIMUM HI-STORM 100SA TEMPERATURES

Component	Temperature[12] °C (°F)	Accident Limit °C (°F)
Fuel Cladding		570 (1058)
MPC Basket		510 (950)
Basket Periphery		510 (950)
MPC Shell		413 (775)
Overpack Inner Shell		427 (800)
Overpack Outer Shell		427 (800)
Lid Bottom Plate		427 (800)
Lid Top Plate		427 (800)
Overpack Body Concrete[13]		177 (350)
Overpack Lid Concrete[13]		177 (350)

12 Obtained by adding the difference between extreme ambient and normal temperature difference (25°C (45°F)) to normal condition temperatures (finest mesh) reported in Table B.5.2.

13 Maximum section average temperature is reported.

Table B.5.8

SUMMARY OF INPUTS FOR BURIAL UNDER DEBRIS ANALYSIS

Thermal Inertia Inputs[14]: M (Lowerbound HI-STORM 100SA Weight) Cp (Carbon steel heat capacity)[15]	 99790 kg (220,000 lb) 419 J/kg-K (0.1 Btu/lbm-°F)
Cask initial temperature (clad max. temperature assumed)	
Q (Decay heat)	36.9 kW (0.126 MBtu/hr)
ΔT (clad temperature margin)[16]	

14 Thermal inertia of fuel, basket and MPC is conservatively neglected.

15 Used carbon steel's specific heat since it has the lowest heat capacity among the principal materials employed in MPC and overpack construction (carbon steel, stainless steel and concrete).

16 The clad temperature margin is conservatively understated in this table.

Table B.5.9

BOUNDING HI-STORM 100SA NORMAL STORAGE MPC AND OVERPACK TEMPERATURES IN THE CASK TRANSFER FACILITY (CTF) FOR SCENARIO 1

Component	**Scenario 1 Temperature °C (°F)**	**Temperature Limit °C (°F)**
Fuel Cladding		Moderate Burnup Fuel: 570 (1058) High Burnup Fuel: 400 (752)
MPC Basket		510 (950)
Basket Periphery		510 (950)
MPC Shell		413 (775)
Overpack Inner Shell		427 (800)
Overpack Outer Shell		427 (800)
Lid Bottom Plate		427 (800)
Lid Top Plate		427 (800)
Overpack Body Concrete[17]		177 (350)
Overpack Lid Concrete[17]		177 (350)
Average Air Outlet		-
Pressure kPa (psig)		
MPC Cavity		689.3 (100)

[17] Maximum section average temperature is reported.

Table B.5.10

[PROPRIETARY

Component			**Temperature Limit °C (°F)**
Fuel Cladding			400 (752)
MPC Basket[Note 1]			385 (725)
Basket Periphery			385 (725)
MPC Shell			260 (500)
Overpack Inner Shell			177 (350)
Overpack Outer Shell			177 (350)
Lid Bottom Plate			232 (450)
Lid Top Plate			232 (450)
Overpack Body Concrete[20]			149 (300)
Overpack Lid Concrete[20]			149 (300)
Average Air Outlet			-
[PROPRIETARY]			

18 All the temperatures tabulated herein include the temperature adder reported in Table B.5.2 for all the components.

19 These results are reported for the finest mesh in Table B.5.2.

20 Maximum section average temperature is reported.

Table B.5.11

SUMMARY OF MPC CONFINEMENT BOUNDARY PRESSURES[21] FOR SCENARIO 2

Condition	**Gauge Pressure kPa (psig)[22]**	**Pressure Limit[Note 1] kPa (psig)**	**MPC Cavity Average Temperature °C (°F)**
Maximum Initial backfill at 21.1°C (70°F)	313.6 (45.5)	-	257 (495)
Normal condition (no rods rupture)	645.9 (93.7)	689.3 (100)	
Normal condition (1% rods ruptured)	654.1 (94.9)	689.3 (100)	
Off-normal (10% rods ruptured)	723.1 (104.9)	758.2 (110)	
Accident (100% rods ruptured)	1340.7 (194.5)	1378.6 (200)	230 (446)
Note 1: The cavity pressure for Scenario 2 must satisfy the pressure limits specified in [B-2].			

21 Per NUREG-1536, pressure analyses with postulated rods rupture is performed assuming release of 100% of ruptured fuel rods fill gas and 30% of the significant radioactive gaseous fission products.

22 The pressures reported in this table are computed assuming the helium backfill pressure is at its upper bound limit (Table 1.1 of main report).

Table B.5.12

OFF-NORMAL AND ACCIDENT CONDITION MAXIMUM MPC PRESSURES (SCENARIO 2)

Condition	MPC Cavity Average Temperature °C (°F)	Gauge Pressure kPa (psig)	Pressure Limit[Note1] kPa (psig)
Off-Normal Conditions			
Off-Normal Ambient[23]	268 (514)	661.7 (96.0)	689.3 (100)
Partial Blockage of Inlet Ducts[24]	261 (502)	652.1 (94.6)	689.3 (100)
Accident Conditions			
Extreme Ambient Temperature	282 (540)	681.0 (98.8)	1378.6 (200)
100% Blockage of Air Inlets @ 32 Hr[24]	348 (658)	774.8 (112.4)	1378.6 (200)
HI-STORM Fire Accident[24]	259 (498)	648.6 (94.1)	1378.6 (200)
Burial Under Debris @ Maximum Allowable Burial Time	424 (795)	880.9 (127.8)	1378.6 (200)

Note 1: Since all the off-normal and accident scenarios mentioned in this table satisfy the more conservative Diablo Canyon specific pressure limits [2] in Section 8.0 of this report, the Diablo Canyon limits are listed here.

23 The off-normal pressure event defined in Part (a) of Section B.5.4 for Scenario 2 bounds the pressure during the off-normal ambient temperature event (Part (b) in Section B.5.4).

24 MPC pressure is calculated based on the cavity average temperature that include the temperature adder reported in Table B.5.2.

Table B.5.13

HI-STORM 100SA PEAK CLADDING TEMPERATURES FOR DIFFERENT HEAT LOADS[25]

Component	Temperature for Scenario 2[Note 1] °C (°F)	Temperature Limit for Scenario 2[Note 2] °C (°F)	Temperature for Scenario 1[Note 1] °C (°F)	Temperature Limit for Scenario 1[Note 3] °C (°F)
Fuel Cladding		400 (752)		400 (752)
MPC Basket		385 (725)		385 (725)
Basket Periphery		385 (725)		385 (725)
MPC Shell		260 (500)		232 (450)
Overpack Inner Shell		177 (350)		177 (350)
Overpack Outer Shell		177 (350)		177 (350)
Lid Bottom Plate		232 (450)		177 (350)
Lid Top Plate		232 (450)		177 (350)
Overpack Body Concrete[26]		149 (300)		149 (300)
Overpack Lid Concrete[26]		149 (300)		149 (300)
Average Air Outlet		-		-

Note 1: These scenarios are defined in Section 1.4 of this report.

Note 2: The temperature limits of all the components are obtained from [B-2].

Note 3: The temperature limits of all the components except concrete are obtained from [2] in Section 8.0 of this report.

25 The peak cladding temperatures presented in the table are based on the finest mesh.

26 Maximum section average temperature is reported.

Table B.5.14

SUMMARY OF MPC CONFINEMENT BOUNDARY PRESSURES FOR SCENARIO 1[Note 1]

Condition	**Gauge Pressure kPa (psig)**	**Pressure Limit kPa (psig)**	**MPC Cavity Average Temperature °C (°F)**
Maximum Initial backfill at 21.1°C (70°F)	229.5 (33.3)	-	228 (442)
Normal condition (no rods rupture)	461.8 (67.0)	689.3 (100)	
Normal condition (1% rods ruptured)	469.4 (68.1)	689.3 (100)	
Off-normal (10% rods ruptured)	549.4 (79.7)	689.3 (100)	
Accident (100% rods ruptured)	1191.8 (172.9)	1378.6 (200)	

Note 1: The pressures presented in this table are for Scenario 1 listed in Section 1.4 at helium backfill specifications reported in Table 1.1 to maintain a MPC cavity pressure of at least 5 atm absolute.

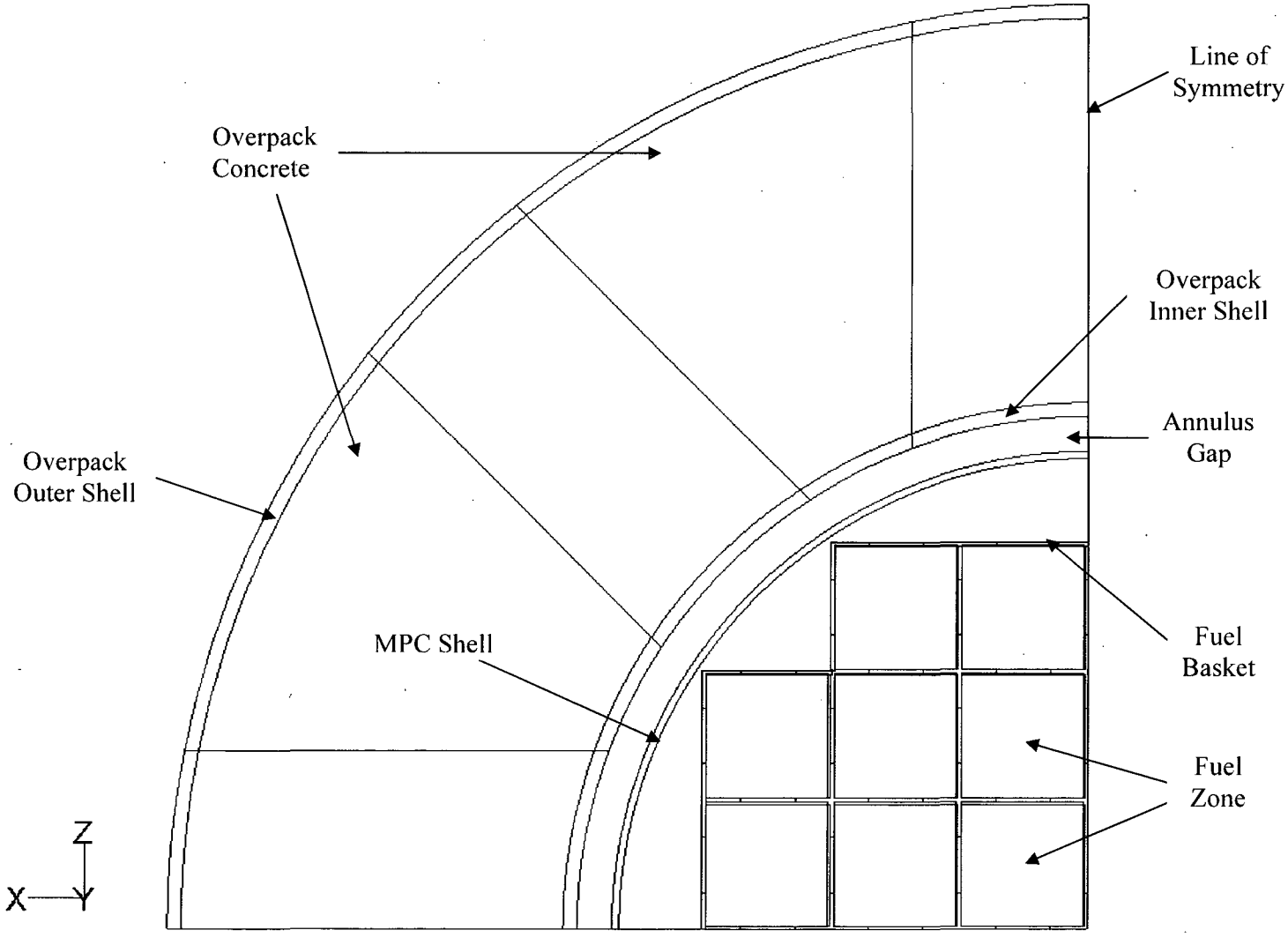

Figure B.2.1: Planar View of HI-STORM 100SA MPC- 32 Quarter Symmetric 3-D Model

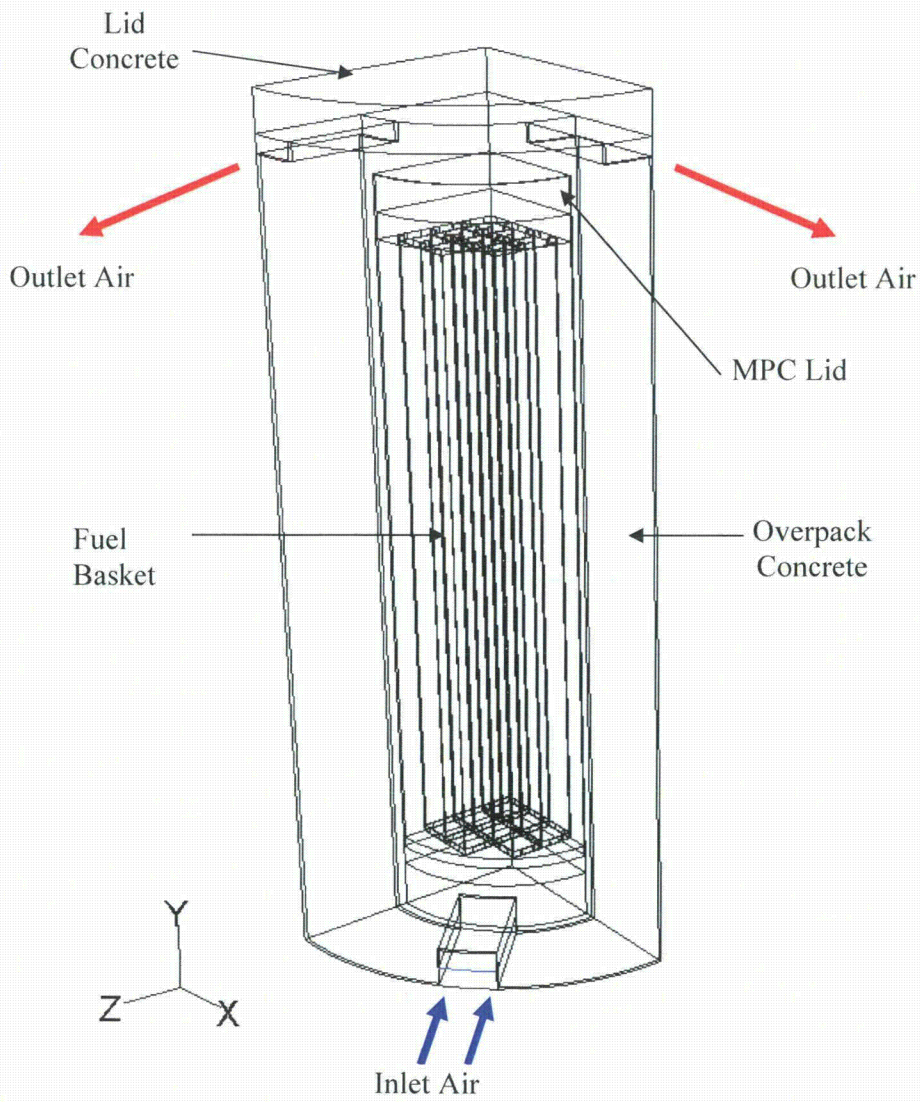

Figure B.2.2: HI-STORM 100SA MPC- 32 Quarter Symmetric 3-D Model

[PROPRIETARY]

Figure B.5.1: Basket Geometry

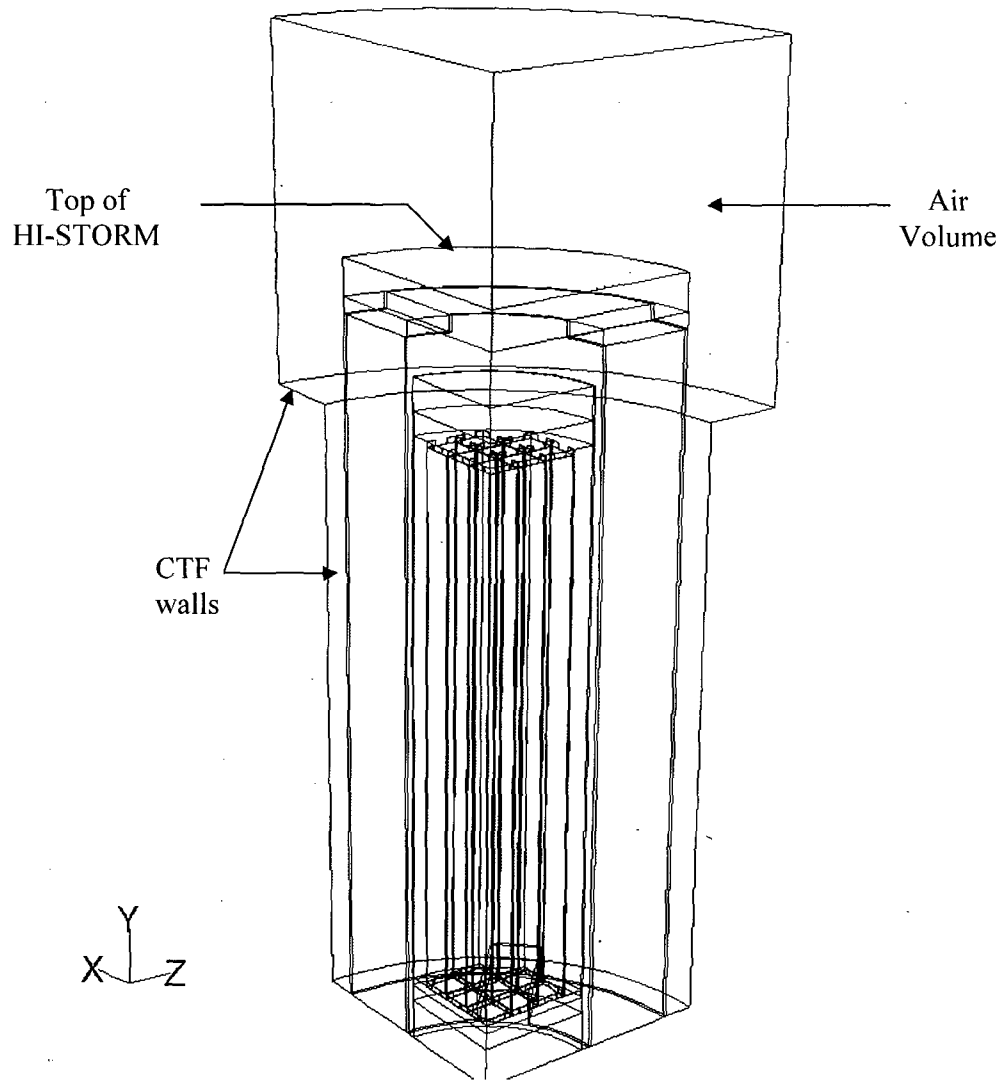

Figure B.5.2: Quarter Symmetric 3-D Model of HI-STORM 100SA Placed in CTF

Appendix C

Thermal Analysis of MPC-32 in HI-TRAC
(Total 19 Pages)

C.1 INTRODUCTION

Calculations to evaluate the temperature and pressure fields in the HI-TRAC loaded MPC-32 when the HI-TRAC is in a vertical (upright) orientation are presented in this appendix. For a bounding evaluation, the limiting fuel storage configuration, i.e. Scenario 2 in Section 1.4, is analyzed. Conditions evaluated include normal on-site transfer, water loss accident condition, fire accident and tornado missile impact.

C.2 METHODOLOGY AND ASSUMPTIONS

The calculations to determine the temperature fields during normal on-site transfer and water loss accident conditions are performed using 3-D Computational Fluid Dynamics (CFD) models. The steps performed for each evaluated condition are as follows:

1. The CFD model of the MPC and HI-TRAC is generated using a pre-processor of FLUENT [C-2] program. To ensure an adequate representation of the features of the fuel and basket within the MPC, MPC-32 and HI-TRAC Overpack, a 3-D quarter symmetric model is constructed.
2. Material thermal-hydraulic properties are applied to the model.
3. Loads and boundary conditions are applied to the model, and steady-state thermal solutions are obtained.

Such a methodology has been adopted in recent application submitted to the USNRC, i.e. HI-STORM FW, Docket No 72-1032. The 3-D models implemented to analyze the HI-TRAC have the following key attributes:

1. The MPC portion of the model contains a porous medium to represent the fuel, the top and bottom plenum, and a fluid (helium) zone in the basket-to-shell downcomer region.
2. Radiation heat transfer between the periphery of the fuel basket and the inner surface of the MPC shell is included **[PROPRIETARY**].
3. In the radial direction, the HI-TRAC portion of the model explicitly contains five layered solid zones that represent the inner shell, the radial lead shield, the outer shell, the water jacket and the enclosure shell.

4. In the axial direction, the pool lid steel and lead layers are explicitly modeled below the MPC, and the top lid and associated air space are explicitly modeled above the MPC.

There are several features of the CFD models that differ from the equipment designs. These differences are modeling simplifications that introduce small conservatisms in the thermal analysis. The following differences exist:

1. A small portion of the HI-TRAC top flange is not modeled as solid carbon steel ring. Instead, the inner and outer shells and the intermediate radial lead are extended to occupy this small portion of flange space. This results in carbon steel being replaced with lower conductivity lead and is, therefore, conservative.

2. The circular hole in the HI-TRAC lid is modeled as a rectangular opening. The modeled opening area is lower than the actual area, therefore conservatively reduces the convective heat transfer from the top of the MPC.

3. The outer diameter of HI-TRAC lid is modeled equal to the outer diameter of the outer shell. This results in an area of the top lid that is normally exposed directly to the ambient being occupied with additional material through which any heat might flow and is, therefore, conservative.

4. The outer diameter of lead shield in the pool lid is modeled to align with the outer diameter of radial lead shield. This results in carbon steel being replaced with lower conductivity lead and is, therefore, conservative.

5. The bottom flange extension outside the enclosure shell envelope is not modeled. This simplification conservatively ignores bottom fin cooling. Also the height of bottom flange is modeled as 2.5" instead of 2". This results in a small portion of lower conductivity lead being replaced by carbon steel. Considering that there is no significant heat transfer at the bottom of HI-TRAC, this will not affect the thermal performance significantly.

6. Natural convection of water or air inside the water jacket is conservatively neglected.

7. A vertical wall is located near the HI-TRAC overpack when MPC is loaded in the HI-TRAC. The closest distance between the vertical wall and HI-TRAC outer surface is 25 inch

[C-8], which is significantly larger than the boundary layer thickness due to natural convection. There is no other obstruction that may block the air flow to the HI-TRAC. **[PROPRIETARY**]

8. **[PROPRIETARY**

]

9. The most severe environment factor for short-term operation -ambient temperature 100°F and 10CFR71 insolation level-were coincidentally imposed on the system.

10. **[PROPRIETARY**

]

[PROPRIETARY

]

C.3 INPUT DATA

[PROPRIETARY

]

Geometric data for the fuel basket and MPC are taken from the drawings [C-4] and [C-5]. The fuel basket flow resistance inputs are taken from the Holtec topical report on hydraulic resistance [C-3].

Geometric data for the HI-TRAC 125D, subject to the modeling differences listed in section C.2, are taken from the HI-TRAC drawing [C-6].

The thermal properties of individual component material and effective fuel and basket properties are referenced from HI-STORM FSAR [C-1].

A helium absolute pressure of 7 atm is conservatively used for MPC internal convection heat transfer. **[PROPRIETARY**

] A solar absorptivity coefficient of 1.0 is applied to all exposed overpack surfaces.

C.4 COMPUTER PROGRAM AND FILES

For the normal conditions of on-site transfer, the HI-TRAC is analyzed for the limiting scenario (Scenario 2 in Section 1.4). For the accident condition (i.e., water jacket filled with air instead of water), the model is evaluated at the design-basis decay heat load but with air instead of water inside the water jacket.

The computer code FLUENT Version 6.3.26 is used in these thermal calculations. The list of input and output files is presented below:

G:\Projects\1073\REPORTS\Thermal Reports\HI-TRAC\gambit

March 10, 2010, 10:24:56 AM	188,743,680 bytes	DC-HI-TRAC.S.dbs
March 10, 2010, 10:26:51 AM	88,788,445 bytes	DC-HI-TRAC.S.msh

G:\Projects\1073\REPORTS\Thermal Reports\HI-TRAC\fluent

Normal On-site Transfer:

May 19, 2010, 3:38:53 PM	52,963,873 bytes	DC-HI-TRAC.SW-X=0.5.cas
May 19, 2010, 3:39:40 PM	966,018,915 bytes	DC-HI-TRAC.SW-X=0.5.dat
March 04, 2010, 6:05:33 PM	2,407 bytes	udf-diablo-x=0.5.c

Water Jacket Loss Accident:

May 19, 2010, 3:15:18 PM	52,964,452 bytes	DC-HI-TRAC.SA-X=0.5.cas
May 19, 2010, 3:16:08 PM	966,018,627 bytes	DC-HI-TRAC.SA-X=0.5.dat

Heat Load Q=28.74 kW:

June 18, 2010, 8:49:40 AM	52,963,854 bytes	DC-HI-TRAC-water-28.74kw.cas

June 18, 2010, 8:50:19 AM 966,059,839 bytes DC-HI-TRAC-water-28.74kw.dat

G:\Projects\1073\REPORTS\Thermal Reports\HI-TRAC\

May 18, 2010, 1:53:47 PM 61,195 bytes k-airgap.xmcd

C.5 RESULTS AND CONCLUSIONS

C.5.1 Normal and Water Loss Accident On-site Transfer Temperatures (Scenario 2)

[PROPRIETARY

]

The HI-TRAC was evaluated for the limiting Scenario 2 decay heat load distribution (see Section 1.4). The results of these FLUENT CFD analyses for on-site transfer conditions are presented for two conditions: (i) Water filled jacket (normal condition) and (ii) Complete loss of water (accident condition). The results are post-processed interactively with the FLUENT program. Discrete numeric results are presented in Tables C.1 and C.2. The results show that the peak fuel cladding temperature during normal on-site transfer conditions is below its temperature limit for moderate burnup fuel but exceeds the allowable limit for high-burnup fuel. A Supplemental Cooling System (SCS) will be required to be used to maintain the maximum cladding temperature for high burnup fuel below the 400°C temperature limit for an MPC that contains one or more high burnup fuel assemblies. The SCS is discussed in Section C.5.7 of this appendix. All the MPC & HI-TRAC overpack component temperatures **[PROPRIETARY**] are below their respective temperature limits for normal on-site transfer conditions. **[PROPRIETARY**

] Table C.2 shows that the peak fuel cladding temperatures for water loss accident is below its temperature limit. All the MPC & HI-TRAC overpack component temperatures are also below their respective temperature limits.

C.5.2 Thermal Evaluations supporting DC ISFSI License (Scenario 1)*

This evaluation was performed to support the Diablo Canyon ISFSI license that loads upto a uniform heat of 28.74 kW. Normal on-site transfer of an MPC-32 placed in the HI-TRAC is evaluated in this sub-section. The MPC placed in the HI-TRAC is evaluated for Scenario 1 listed in Section 1.4 of this report. The operating pressure inside the MPC is 5 atmospheres absolute. This heat load and operating pressure are also based on HI-STORM 100 CoC, Amendments 1 to 4 [C-9]. The peak cladding temperature result of this evaluation is tabulated in Table C.6 and is bounded by the Scenario 2 results presented in Table C.1. Therefore, all the off-normal and accident evaluations of the HI-TRAC presented in this appendix are performed for the limiting (Scenario 2 in Section 1.4) scenario.

C.5.3 Fire Accident On-site Transfer Temperatures

The purpose of this calculation is to determine the duration and effects of an assumed 50-gallon flammable liquid fuel fire on the HI-TRAC transfer cask. The duration of the fire is calculated based on the fuel volume and fuel consumption rate. The thermal inertia of the loaded HI-TRAC is determined based on component weights and specific heat capacities. The heat input from the fire and SNF decay is determined, and a bounding temperature rise of the HI-TRAC components is determined assuming an adiabatic heatup with uniform heat generation. **[PROPRIETARY**

]

The calculations are presented in Appendix E of this report. The calculation shows that the maximum temperature rises by 9°C (17°F). The fuel cladding and MPC component temperatures are

* See Section 1.4 for Scenario 1.

tabulated in Table C.3. The results show that fuel cladding and all component temperatures are below than their accident temperature limits.

C.5.4 Tornado Missile Impact (Accident)

During a tornado, it is possible for a tornado-driven missile to breach the water jacket on the HI-TRAC transfer cask. From a thermal-hydraulic performance perspective, this is identical to the water jacket loss accident condition evaluated in Subsection C.5.1.

C.5.5 MPC Cavity Pressure

The MPC-32, prior to sealing, is backfilled with helium. The helium backfill pressure specification for MPC-32 is reported in Table 1.1. For normal on-site transfer and accident conditions, the MPC-32 pressures while placed inside the HI-TRAC are computed by using Ideal Gas Law in an EXCEL spreadsheet listed in Section B.4, and results are tabulated in Table C.4 for Scenario 2 (limiting heat load).

At the DC ISFSI, the limiting MPC-32 will be loaded with a uniform decay heat load of 28.74 kW (Scenario 1) and a helium backfill conditions consistent with Diablo Canyon FSAR [2]. The MPC-32 pressures are computed in the EXCEL spreadsheet "mpc_pres_R1.xls" listed in Section B.4 and results reported in Table C.7 for this scenario. The MPC boundary pressures are below the design pressure limits specified both in DC ISFSI SAR [2] and Chapter 2 of Reference C-1.

C.5.6 Thermal Expansion Computations

In this subsection, the radial thermal expansion of MPC-to-HI-TRAC is computed to justify the calculation of the effective thermal conductivities of air in the annular gap between the MPC and the HI-TRAC inner shell, presented in section C.5.1.

The radial growth of the MPC shell relative to the HI-TRAC inner shell (δ) upon heating from a 70°F reference temperature to operation temperatures is computed as follows:

$$\delta = R_1\alpha_1[T_1 - T_o] - R_2\alpha_2[T_2 - T_o] \qquad \text{(Eq. C.5.2)}$$

Where:

R_1: MPC shell outer radius

R_2: HI-TRAC inner shell inner radius

T_1: MPC shell average temperature during normal on-site transfer condition

T_2: HI-TRAC inner shell average temperature during normal on-site transfer condition

α_1: Coefficient of thermal expansion for MPC shell T_1 for Alloy-X

α_2: Coefficient of thermal expansion for HI-TRAC inner shell at T_2 for Carbon Steel

The required data for computing δ_1 is provided below:

$\alpha_1 = 9.278*10^{-6}\ {}^{o}F^{-1}$ (Table 3.3.1 [C-1])

$\alpha_2 = 6.58*10^{-6}\ {}^{o}F^{-1}$ (Table 3.3.2 [C-1])

R1 = 34.25 in [C-5]

R2 = 34.375 in [C-6]

$T_1 = 439^{o}F$

$T_2 = 370^{o}F$

$T_o = 70^{o}F$

Substituting the above data in Eq. C.5.2, the radial growth is computed as $\delta = 0.05$ in. The nominal cold gap between MPC shell and HI-TRAC inner shell is 0.125in. The cold gap will be reduced by 40% due to thermal expansion. Therefore it is conservative to use 30% gap reduction in the calculation of the effective thermal conductivity of air in the annular gap.

C.5.7 Mandatory Limits for Short Term Operations – Supplemental Cooling System (SCS)

In some cases, it is necessary to provide additional cooling when decay heat loads are such that short-term cladding temperature limits would be exceeded. For such situations, the Supplemental Cooling System (SCS) is required to provide additional cooling during short term operations. An SCS is required by the HI-STORM CoC for any MPC carrying one or more high burnup fuel assemblies or when the MPC heat load is such that short-term cladding temperature limits would be exceeded. The requirements and limits for the HI-STORM CoC Amendment 5 SCS are listed in the following table:

Condition	Fuel in MPC	MPC Heat Load (kW)	SCS Required
1*	All MBF	≤ 28.74	NO
2	All MBF	> 28.74	YES
3	One or more HBF	any	YES
* The highest temperatures are reached under this un-assisted cooling threshold heat load scenario. Under other conditions the mandatory use of the Supplemental Cooling System, sized to extract 36.9 kW from the MPC, will lower the fuel temperatures significantly assuring ISG 11, Rev. 3 compliance with large margins.			

The DC ISFSI license has a limit of 28.74 kW (Scenario 1 in Section 1.4). The peak cladding temperature computed for normal transfer of fuel in the HI-TRAC for this scenario is 808°F (see Table C.6) which is substantially lower than the temperature limit of 1058°F for moderate burnup fuel (MBF)†. Consequently, cladding integrity assurance is provided by large safety margins (in excess of 200°F) during onsite transfer of an MPC containing MBF emplaced in a HI-TRAC cask.

For high burnup fuel (HBF), however, the maximum computed fuel cladding temperature reported in Table C.6 is significantly greater than the temperature limit of 752°F for HBF. Consequently, it is necessary to utilize an SCS that will maintain the cladding temperatures below 400°C (752°F), during onsite transfer of an MPC containing HBF emplaced in a HI-TRAC transfer cask. Therefore, an SCS is only required for the high burnup fuel condition.

The maximum temperature of the outer surface of the MPC shell during normal on-site transfer for Scenario 1 is 453°F. If standing water is maintained in the MPC/HI-TRAC annulus space, the temperature of the MPC surface will be at the boiling temperature of water (~232°F). Therefore, in this condition, since the MPC outer surface temperature is about 220°F lower, the fuel cladding temperatures will be lower than the fuel cladding temperature limit of 752°F. Therefore, the fuel cladding temperature is maintained below its temperature limit with an SCS that maintains the presence of standing water in the MPC/HI-TRAC annulus space.

† MBF is an abbreviation for Moderate Burnup Fuel while HBF stands for High Burnup Fuel.

C.6 REFERENCES

[C-1] HI-STORM FSAR, Report HI-2002444, Rev. 7.

[C-2] FLUENT Computational Fluid Dynamics Software, Fluent Inc.

[C-3] "Pressure Loss Characteristics for In-Cell Flow of Helium in PWR and BWR MPC Storage Cells", Holtec Report HI-2043285, Rev. 7

[C-4] "Diablo Canyon MPC-32 Fuel Basket Assembly," Holtec Drawing 4458, Revision 7.

[C-5] "Diablo Canyon Enclosure Vessel," Holtec Drawing 4459, Revision 9.

[C-6] "125 Ton HI-TRAC 125D Assembly," Holtec Drawing 4460, Revision 4.

[C-7] NUREG-1536, "Standard Review Plan for Dry Cask Storage Systems," U.S. Nuclear Regulatory Commission, January 1997.

[C-8] "CWA Wall Mount Platform Assembly," Holtec Drawing 5279, Revision 10.

[C-9] HI-STORM 100 CoC, Amendments 1 to 4, USNRC Docket 72-1014.

[C-10] HI-STORM 100 CoC, Amendment 5, USNRC Docket 72-1014.

[C-11] "Cladding Considerations for the Transportation and Storage of Spent Fuel," Interim Staff Guidance – 11, Revision 3, USNRC, Washington, DC.

Table C.1

MAXIMUM MPC AND HI-TRAC TEMPERATURES DURING NORMAL ON-SITE TRANSFER CONDITION FOR LIMITING HEAT LOAD (SCENARIO 2)

Component	**Temperature °C (°F)**	**Short-Term Operation Temperature Limit[Note 1] °C (°F)**
Fuel Cladding		Moderate Burnup Fuel: 570 (1058) High Burnup Fuel: 400 (752)
MPC Basket		510 (950)
Basket Periphery		510 (950)
MPC Shell		413 (775)
HI-TRAC Inner Shell		204 (400)
Water Jacket Outer Shell		177 (350)
Water Bulk Temperature in Water Jacket		153 (307)
Axial Neutron Shield[2]		149 (300)

Note 1: The temperature limits are obtained from [C-1].

Note 2: The HI-TRAC inner shell temperature limit in the currently approved HI-STORM 100 FSAR is 400°F. But, the temperature of the inner shell is higher than the limit. See Section C.5.1 of this report for details.

1 This calculated value exceeds the allowable limit for high-burnup fuel. A Supplemental Cooling System that satisfies the criteria in Appendix 2.C of Reference C-1 shall be used to comply with applicable temperature limits when an MPC contains one or more high burnup fuel assemblies or exceeds a threshold heat load (see Section 4.5.5.1 of Reference C-1).

2 Maximum section average temperature is reported.

Table C.2

MAXIMUM MPC AND HI-TRAC TEMPERATURES DURING WATER LOSS ACCIDENT CONDITION FOR LIMITING HEAT LOAD (SCENARIO 2)

Component	**Temperature °C (°F)**	**Accident Temperature Limit[Note 1] °C (°F)**
Fuel Cladding		570 (1058)
MPC Basket		510 (950)
Basket Periphery		510 (950)
MPC Shell		413 (775)
HI-TRAC Inner Shell		316 (600)
Water Jacket Outer Shell		371 (700)
Axial Neutron Shield[3]		177 (350)

Note 1: The temperature limits of all the components except the axial neutron shield are obtained from [2] in Section 8.0 of this report.

3 Maximum section average temperature is reported.

Table C.3

MAXIMUM MPC AND FUEL CLADDING TEMPERATURES DURING FIRE ACCIDENT CONDITION FOR LIMITING HEAT LOAD (SCENARIO 2)

Component	**Temperature °C (°F)**	**Accident Temperature Limit[Note1] °C (°F)**
Fuel Cladding		570 (1058)
MPC Basket		510 (950)
Basket Periphery		510 (950)
MPC Shell		413 (775)
MPC Lid[4]		413 (775)
Note 1: The temperature limits are obtained from [2] in Section 8.0 of this report.		

[4] Maximum section average temperature is reported

Table C.4

MPC-32 CONFINEMENT BOUNDARY PRESSURE DURING ON-SITE TRANSFER FOR LIMITING HEAT LOAD (SCENARIO 2)

Conditions	**Cavity Average Temperature °C (°F)**	**Pressure kPa (psig)**	**Pressure Limit kPa (psig)**
Normal Condition (No Rod Rupture)	308 (586)	718.2 (104.2)	758.2 (110)
Water Loss Accident Condition	333 (631)	753.4 (109.3)	1378.6 (200)
Fire Accident Condition	317 (603)	730.6 (106.0)	1378.6 (200)

Table C.5

HI-TRAC WEIGHTS AND THERMAL INERTIAS

Component	Weight * kg (lbs)	Heat Capacity [C-1] J/kg-°C (Btu/lb-°F)	Thermal Inertia J/°C (Btu/°F)
HI-TRAC			
Water in Water Jacket	3821 (8424)	4182 (0.999)	15.98×10^6 (8416)
Lead	36521 (80514)	130 (0.031)	4.75×10^6 (2496)
Carbon Steel	24064 (53052)	419 (0.1)	10.08×10^6 (5305)
MPC			
Alloy-X	13523 (29813)	502 (0.12)	6.79×10^6 (3578)
Metamic	276 (609)	921 (0.22)	0.25×10^6 (134)
Fuel	23529 (51872)	234 (0.056)	5.51×10^6 (2905)
MPC Cavity Water	3131 (6904)+	4182 (0.999)	13.09×10^6 (6897)
Total value			56.45×10^6 (29731)

Note: * The components' weight are referenced from their corresponding Holtec drawings [C-4, C-5, C-6].

+ Only 50% of MPC cavity water is credited.

Table C.6

MAXIMUM MPC AND HI-TRAC TEMPERATURES
DURING NORMAL ON-SITE TRANSFER CONDITION

Component	**Temperature for Scenario 2**[Note 1] **°C (°F)**	**Temperature for Scenario 1**[Note 1] **°C (°F)**	**Short-Term Operation Temperature Limits**[Note 3] **°C (°F)**
Fuel Cladding			Moderate Burnup Fuel: 570 (1058) High Burnup Fuel: 400 (752)
MPC Basket			510 (950)
Basket Periphery			510 (950)
MPC Shell			413 (775)
HI-TRAC Inner Shell			204 (400)
Water Jacket Outer Shell			177 (350)
Water Bulk Temperature in Water Jacket			153 (307)
Axial Neutron Shield[5]			149 (300)

Note 1: These scenarios are defined in Section 1.4 of this report.

Note 2: The HI-TRAC inner shell temperature limit in the currently approved HI-STORM 100 FSAR is 400°F. But, the temperature of the inner shell is higher than the limit. See Section C.5.1 of this report for details.

Note 3: The temperature limits are obtained from [2] in Section 8.0 of this report.

5 Maximum section average temperature is reported.

Table C.7

MPC-32 CONFINEMENT BOUNDARY PRESSURE DURING ON-SITE TRANSFER FOR SCENARIO 1

Conditions	**Cavity Average Temperature °C (°F)**	**Pressure kPa (psig)**	**Pressure Limit kPa (psig)**
Normal Condition (No Rod Rupture)	274 (525)	513.5 (74.5)	689.3 (100)

Appendix D

MPC-32 Free Volume Calculations
(Total 3 pages)

[PROPRIETARY]

Appendix E

HI-TRAC Fire Event Calculations
(Total 5 pages)

[PROPRIETARY]

HOLTEC INTERNATIONAL

Holtec Center, 555 Lincoln Drive West, Marlton, NJ 08053
Telephone (856) 797-0900
Fax (856) 797-0909

U.S. Nuclear Regulatory Commission
ATTN: Document Control Desk

AFFIDAVIT PURSUANT TO 10 CFR 2.390

I, Kelly Kozink, depose and state as follows:

(1) I am the Holtec International Project Manager for the Diablo Canyon Independent Spent Fuel Storage Installation Project and have reviewed the information described in paragraph (2) which is sought to be withheld, and am authorized to apply for its withholding.

(2) The information sought to be withheld is Revision 3 of Holtec Report HI-2104625 and the accompanying CD-ROM with computer data files therefrom, which contains Holtec Proprietary information and is appropriately marked as such.

(3) In making this application for withholding of proprietary information of which it is the owner, Holtec International relies upon the exemption from disclosure set forth in the Freedom of Information Act ("FOIA"), 5 USC Sec. 552(b)(4) and the Trade Secrets Act, 18 USC Sec. 1905, and NRC regulations 10CFR Part 9.17(a)(4), 2.390(a)(4), and 2.390(b)(1) for "trade secrets and commercial or financial information obtained from a person and privileged or confidential" (Exemption 4). The material for which exemption from disclosure is here sought is all "confidential commercial information", and some portions also qualify under the narrower definition of "trade secret", within the meanings assigned to those terms for purposes of FOIA Exemption 4 in, respectively, Critical Mass Energy Project v. Nuclear Regulatory Commission, 975F2d871 (DC Cir. 1992), and Public Citizen Health Research Group v. FDA, 704F2d1280 (DC Cir. 1983).

HOLTEC INTERNATIONAL

Holtec Center, 555 Lincoln Drive West, Marlton, NJ 08053
Telephone (856) 797-0900
Fax (856) 797-0909

U.S. Nuclear Regulatory Commission
ATTN: Document Control Desk

AFFIDAVIT PURSUANT TO 10 CFR 2.390

(4) Some examples of categories of information which fit into the definition of proprietary information are:

a. Information that discloses a process, method, or apparatus, including supporting data and analyses, where prevention of its use by Holtec's competitors without license from Holtec International constitutes a competitive economic advantage over other companies;

b. Information which, if used by a competitor, would reduce his expenditure of resources or improve his competitive position in the design, manufacture, shipment, installation, assurance of quality, or licensing of a similar product.

c. Information which reveals cost or price information, production, capacities, budget levels, or commercial strategies of Holtec International, its customers, or its suppliers;

d. Information which reveals aspects of past, present, or future Holtec International customer-funded development plans and programs of potential commercial value to Holtec International;

e. Information which discloses patentable subject matter for which it may be desirable to obtain patent protection.

The information sought to be withheld is considered to be proprietary for the reasons set forth in paragraphs 4.a and 4.b, above.

(5) The information sought to be withheld is being submitted to the NRC in confidence. The information (including that compiled from many sources) is of

HOLTEC INTERNATIONAL

Holtec Center, 555 Lincoln Drive West, Marlton, NJ 08053
Telephone (856) 797-0900
Fax (856) 797-0909

U.S. Nuclear Regulatory Commission
ATTN: Document Control Desk

AFFIDAVIT PURSUANT TO 10 CFR 2.390

a sort customarily held in confidence by Holtec International, and is in fact so held. The information sought to be withheld has, to the best of my knowledge and belief, consistently been held in confidence by Holtec International. No public disclosure has been made, and it is not available in public sources. All disclosures to third parties, including any required transmittals to the NRC, have been made, or must be made, pursuant to regulatory provisions or proprietary agreements which provide for maintenance of the information in confidence. Its initial designation as proprietary information, and the subsequent steps taken to prevent its unauthorized disclosure, are as set forth in paragraphs (6) and (7) following.

(6) Initial approval of proprietary treatment of a document is made by the manager of the originating component, the person most likely to be acquainted with the value and sensitivity of the information in relation to industry knowledge. Access to such documents within Holtec International is limited on a "need to know" basis.

(7) The procedure for approval of external release of such a document typically requires review by the staff manager, project manager, principal scientist or other equivalent authority, by the manager of the cognizant marketing function (or his designee), and by the Legal Operation, for technical content, competitive effect, and determination of the accuracy of the proprietary designation. Disclosures outside Holtec International are limited to regulatory bodies, customers, and potential customers, and their agents, suppliers, and licensees, and others with a legitimate need for the information, and then only in accordance with appropriate regulatory provisions or proprietary agreements.

(8) The information classified as proprietary was developed and compiled by Holtec International at a significant cost to Holtec International. This information is classified as proprietary because it contains detailed descriptions of analytical

HOLTEC INTERNATIONAL

Holtec Center, 555 Lincoln Drive West, Marlton, NJ 08053
Telephone (856) 797-0900
Fax (856) 797-0909

U.S. Nuclear Regulatory Commission
ATTN: Document Control Desk

AFFIDAVIT PURSUANT TO 10 CFR 2.390

approaches and methodologies not available elsewhere. This information would provide other parties, including competitors, with information from Holtec International's technical database and the results of evaluations performed by Holtec International. A substantial effort has been expended by Holtec International to develop this information. Release of this information would improve a competitor's position because it would enable Holtec's competitor to copy our technology and offer it for sale in competition with our company, causing us financial injury.

(9) Public disclosure of the information sought to be withheld is likely to cause substantial harm to Holtec International's competitive position and foreclose or reduce the availability of profit-making opportunities. The information is part of Holtec International's comprehensive spent fuel storage technology base, and its commercial value extends beyond the original development cost. The value of the technology base goes beyond the extensive physical database and analytical methodology, and includes development of the expertise to determine and apply the appropriate evaluation process.

The research, development, engineering, and analytical costs comprise a substantial investment of time and money by Holtec International.

The precise value of the expertise to devise an evaluation process and apply the correct analytical methodology is difficult to quantify, but it clearly is substantial.

Holtec International's competitive advantage will be lost if its competitors are able to use the results of the Holtec International experience to normalize or verify their own process or if they are able to claim an equivalent understanding by demonstrating that they can arrive at the same or similar conclusions.

HOLTEC INTERNATIONAL

Holtec Center, 555 Lincoln Drive West, Marlton, NJ 08053
Telephone (856) 797-0900
Fax (856) 797-0909

U.S. Nuclear Regulatory Commission
ATTN: Document Control Desk

AFFIDAVIT PURSUANT TO 10 CFR 2.390

The value of this information to Holtec International would be lost if the information were disclosed to the public. Making such information available to competitors without their having been required to undertake a similar expenditure of resources would unfairly provide competitors with a windfall, and deprive Holtec International of the opportunity to exercise its competitive advantage to seek an adequate return on its large investment in developing these very valuable analytical tools.

Executed at Marlton, New Jersey, this 19th day of January, 2011.

Kelly Kozink
Holtec International

HOLTEC INTERNATIONAL

Holtec Center, 555 Lincoln Drive West, Marlton, NJ 08053
Telephone (856) 797-0900
Fax (856) 797-0909

U.S. Nuclear Regulatory Commission
ATTN: Document Control Desk

AFFIDAVIT PURSUANT TO 10 CFR 2.390

I, Kelly Kozink, depose and state as follows:

(1) I am the Holtec International Project Manager for the Diablo Canyon Independent Spent Fuel Storage Installation Project and have reviewed the information described in paragraph (2) which is sought to be withheld, and am authorized to apply for its withholding.

(2) The information sought to be withheld is Revision 8 of Holtec Report HI-2002563, which contains Holtec Proprietary information and is appropriately marked as such.

(3) In making this application for withholding of proprietary information of which it is the owner, Holtec International relies upon the exemption from disclosure set forth in the Freedom of Information Act ("FOIA"), 5 USC Sec. 552(b)(4) and the Trade Secrets Act, 18 USC Sec. 1905, and NRC regulations 10CFR Part 9.17(a)(4), 2.390(a)(4), and 2.390(b)(1) for "trade secrets and commercial or financial information obtained from a person and privileged or confidential" (Exemption 4). The material for which exemption from disclosure is here sought is all "confidential commercial information", and some portions also qualify under the narrower definition of "trade secret", within the meanings assigned to those terms for purposes of FOIA Exemption 4 in, respectively, Critical Mass Energy Project v. Nuclear Regulatory Commission, 975F2d871 (DC Cir. 1992), and Public Citizen Health Research Group v. FDA, 704F2d1280 (DC Cir. 1983).

HOLTEC INTERNATIONAL

Holtec Center, 555 Lincoln Drive West, Marlton, NJ 08053
Telephone (856) 797-0900
Fax (856) 797-0909

U.S. Nuclear Regulatory Commission
ATTN: Document Control Desk

AFFIDAVIT PURSUANT TO 10 CFR 2.390

(4) Some examples of categories of information which fit into the definition of proprietary information are:

a. Information that discloses a process, method, or apparatus, including supporting data and analyses, where prevention of its use by Holtec's competitors without license from Holtec International constitutes a competitive economic advantage over other companies;

b. Information which, if used by a competitor, would reduce his expenditure of resources or improve his competitive position in the design, manufacture, shipment, installation, assurance of quality, or licensing of a similar product.

c. Information which reveals cost or price information, production, capacities, budget levels, or commercial strategies of Holtec International, its customers, or its suppliers;

d. Information which reveals aspects of past, present, or future Holtec International customer-funded development plans and programs of potential commercial value to Holtec International;

e. Information which discloses patentable subject matter for which it may be desirable to obtain patent protection.

The information sought to be withheld is considered to be proprietary for the reasons set forth in paragraphs 4.a and 4.b, above.

(5) The information sought to be withheld is being submitted to the NRC in confidence. The information (including that compiled from many sources) is of

HOLTEC INTERNATIONAL

Holtec Center, 555 Lincoln Drive West, Marlton, NJ 08053
Telephone (856) 797-0900
Fax (856) 797-0909

U.S. Nuclear Regulatory Commission
ATTN: Document Control Desk

AFFIDAVIT PURSUANT TO 10 CFR 2.390

a sort customarily held in confidence by Holtec International, and is in fact so held. The information sought to be withheld has, to the best of my knowledge and belief, consistently been held in confidence by Holtec International. No public disclosure has been made, and it is not available in public sources. All disclosures to third parties, including any required transmittals to the NRC, have been made, or must be made, pursuant to regulatory provisions or proprietary agreements which provide for maintenance of the information in confidence. Its initial designation as proprietary information, and the subsequent steps taken to prevent its unauthorized disclosure, are as set forth in paragraphs (6) and (7) following.

(6) Initial approval of proprietary treatment of a document is made by the manager of the originating component, the person most likely to be acquainted with the value and sensitivity of the information in relation to industry knowledge. Access to such documents within Holtec International is limited on a "need to know" basis.

(7) The procedure for approval of external release of such a document typically requires review by the staff manager, project manager, principal scientist or other equivalent authority, by the manager of the cognizant marketing function (or his designee), and by the Legal Operation, for technical content, competitive effect, and determination of the accuracy of the proprietary designation. Disclosures outside Holtec International are limited to regulatory bodies, customers, and potential customers, and their agents, suppliers, and licensees, and others with a legitimate need for the information, and then only in accordance with appropriate regulatory provisions or proprietary agreements.

(8) The information classified as proprietary was developed and compiled by Holtec International at a significant cost to Holtec International. This information is classified as proprietary because it contains detailed descriptions of analytical

HOLTEC INTERNATIONAL

Holtec Center, 555 Lincoln Drive West, Marlton, NJ 08053
Telephone (856) 797-0900
Fax (856) 797-0909

U.S. Nuclear Regulatory Commission
ATTN: Document Control Desk

AFFIDAVIT PURSUANT TO 10 CFR 2.390

approaches and methodologies not available elsewhere. This information would provide other parties, including competitors, with information from Holtec International's technical database and the results of evaluations performed by Holtec International. A substantial effort has been expended by Holtec International to develop this information. Release of this information would improve a competitor's position because it would enable Holtec's competitor to copy our technology and offer it for sale in competition with our company, causing us financial injury.

(9) Public disclosure of the information sought to be withheld is likely to cause substantial harm to Holtec International's competitive position and foreclose or reduce the availability of profit-making opportunities. The information is part of Holtec International's comprehensive spent fuel storage technology base, and its commercial value extends beyond the original development cost. The value of the technology base goes beyond the extensive physical database and analytical methodology, and includes development of the expertise to determine and apply the appropriate evaluation process.

The research, development, engineering, and analytical costs comprise a substantial investment of time and money by Holtec International.

The precise value of the expertise to devise an evaluation process and apply the correct analytical methodology is difficult to quantify, but it clearly is substantial.

Holtec International's competitive advantage will be lost if its competitors are able to use the results of the Holtec International experience to normalize or verify their own process or if they are able to claim an equivalent understanding by demonstrating that they can arrive at the same or similar conclusions.

HOLTEC INTERNATIONAL

Holtec Center, 555 Lincoln Drive West, Marlton, NJ 08053
Telephone (856) 797-0900
Fax (856) 797-0909

U.S. Nuclear Regulatory Commission
ATTN: Document Control Desk

AFFIDAVIT PURSUANT TO 10 CFR 2.390

The value of this information to Holtec International would be lost if the information were disclosed to the public. Making such information available to competitors without their having been required to undertake a similar expenditure of resources would unfairly provide competitors with a windfall, and deprive Holtec International of the opportunity to exercise its competitive advantage to seek an adequate return on its large investment in developing these very valuable analytical tools.

Executed at Marlton, New Jersey, this 8th day of December, 2010.

Kelly Kozink
Holtec International