South Texas Project Units 3 & 4 Follow-up Discussion on Turbine Overspeed Protection

Agenda

Meeting Objective: Resolve open items and outstanding issues with RAI responses to support the safety review of NINA's application for STP Units 3&4 Section 10.2.

- Introductions
- Presentation by NINA
- Questions and Discussion

Meeting Attendees

- Scott Head, NINA
- Mike Murray, NINA
- Coley Chappell, NINA
- Jim Agles, NINA
- David Dauzat, NINA
- Yuuhei Akashi, Toshiba
- Masayuki Nakajima, Toshiba
- Koichi Kondo, TANE
- Bob Quinn, Westinghouse
- Russell Breed, Westinghouse
- Cal Tang, Westinghouse
- Craig Swanner, TANE
- David Herrell, TANE

STP 3&4 Design

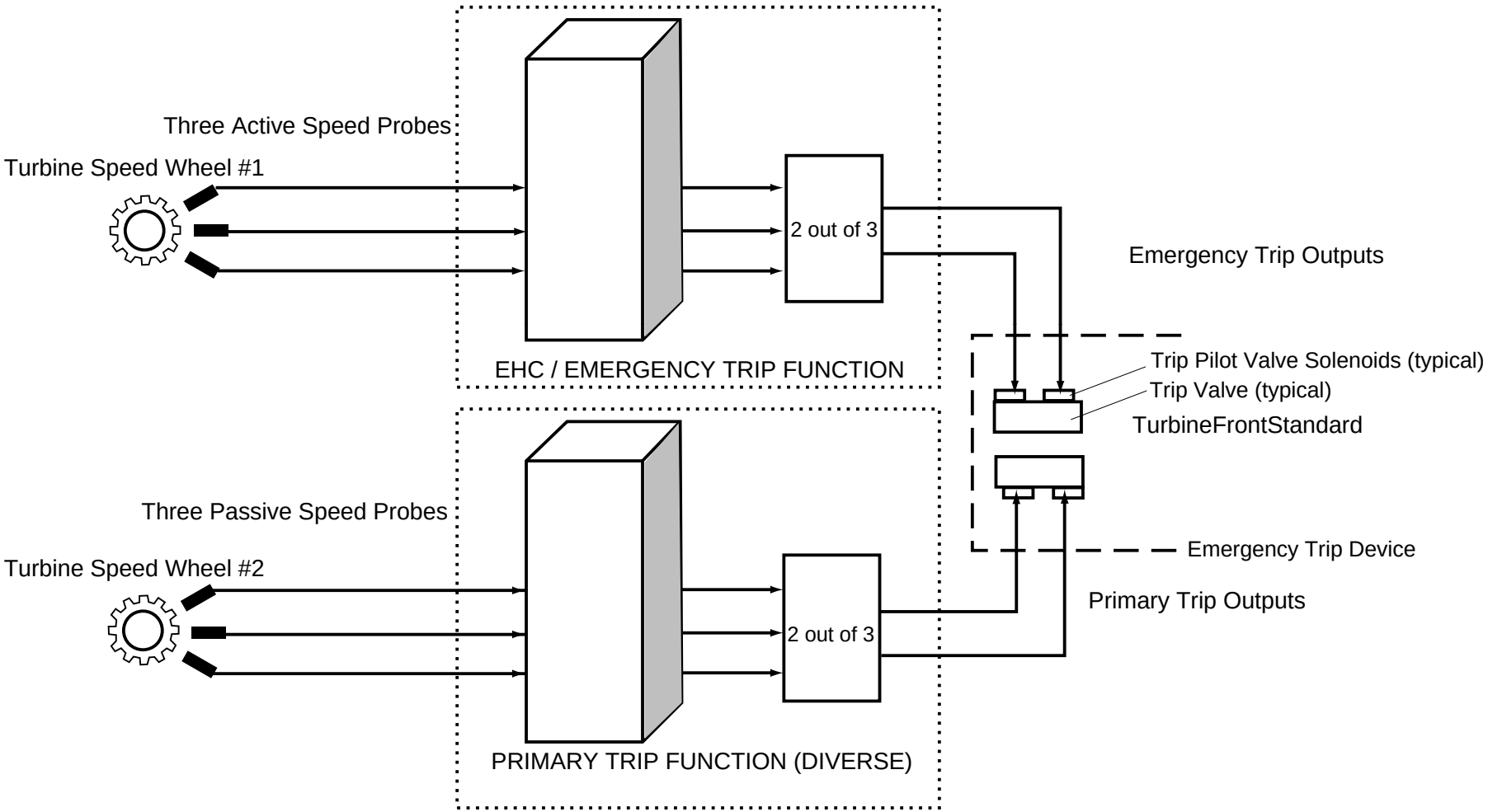

STP 3&4 proposed revision to response to RAI 10.02-4, COLA markup, Tier 2 Figure 10.2-5, **Turbine Overspeed Trip System Functional Diagram**

Power Sources for Turbine Emergency Overspeed Trip Function

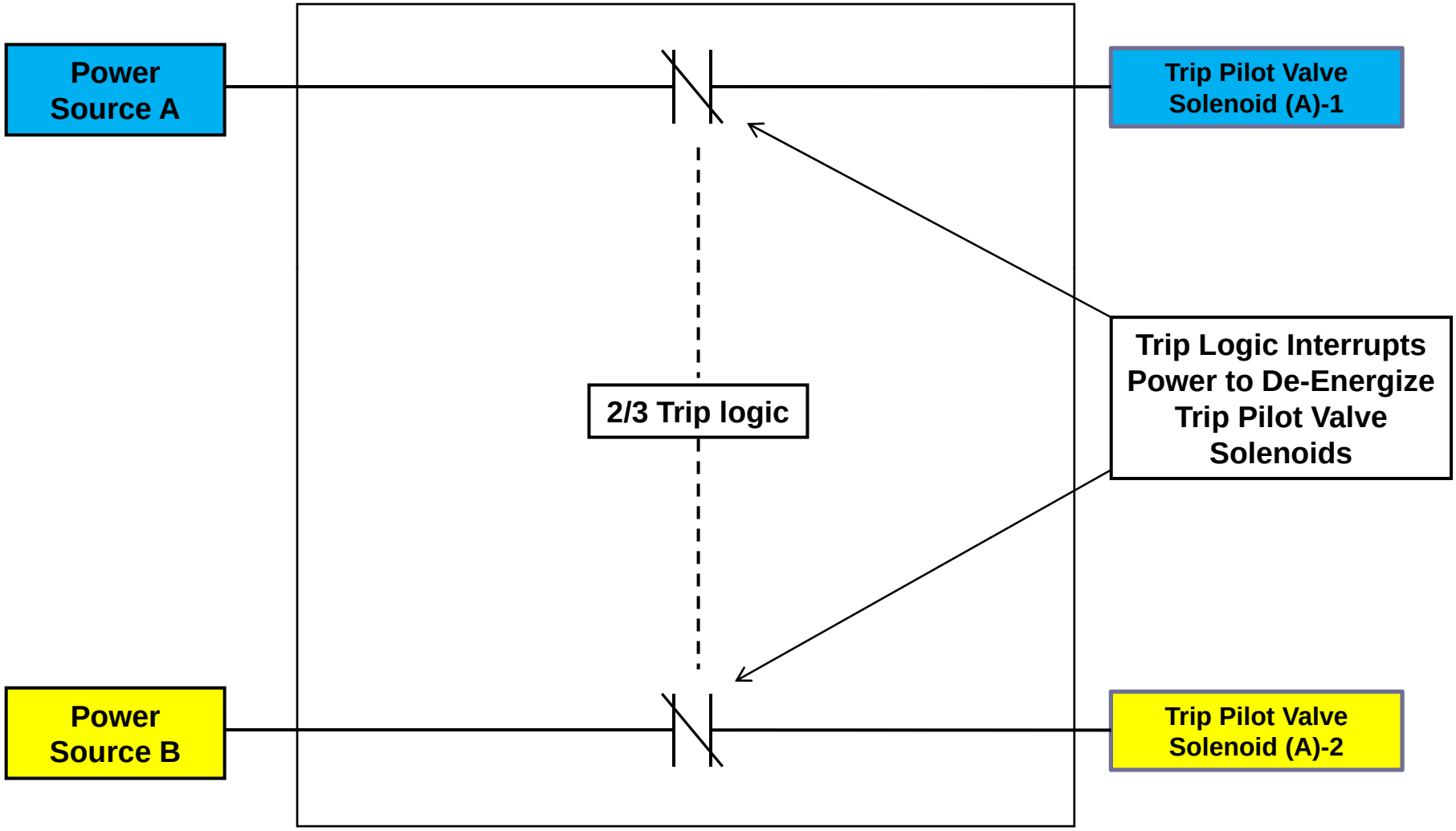

Power Sources for Turbine Primary Overspeed Trip Function

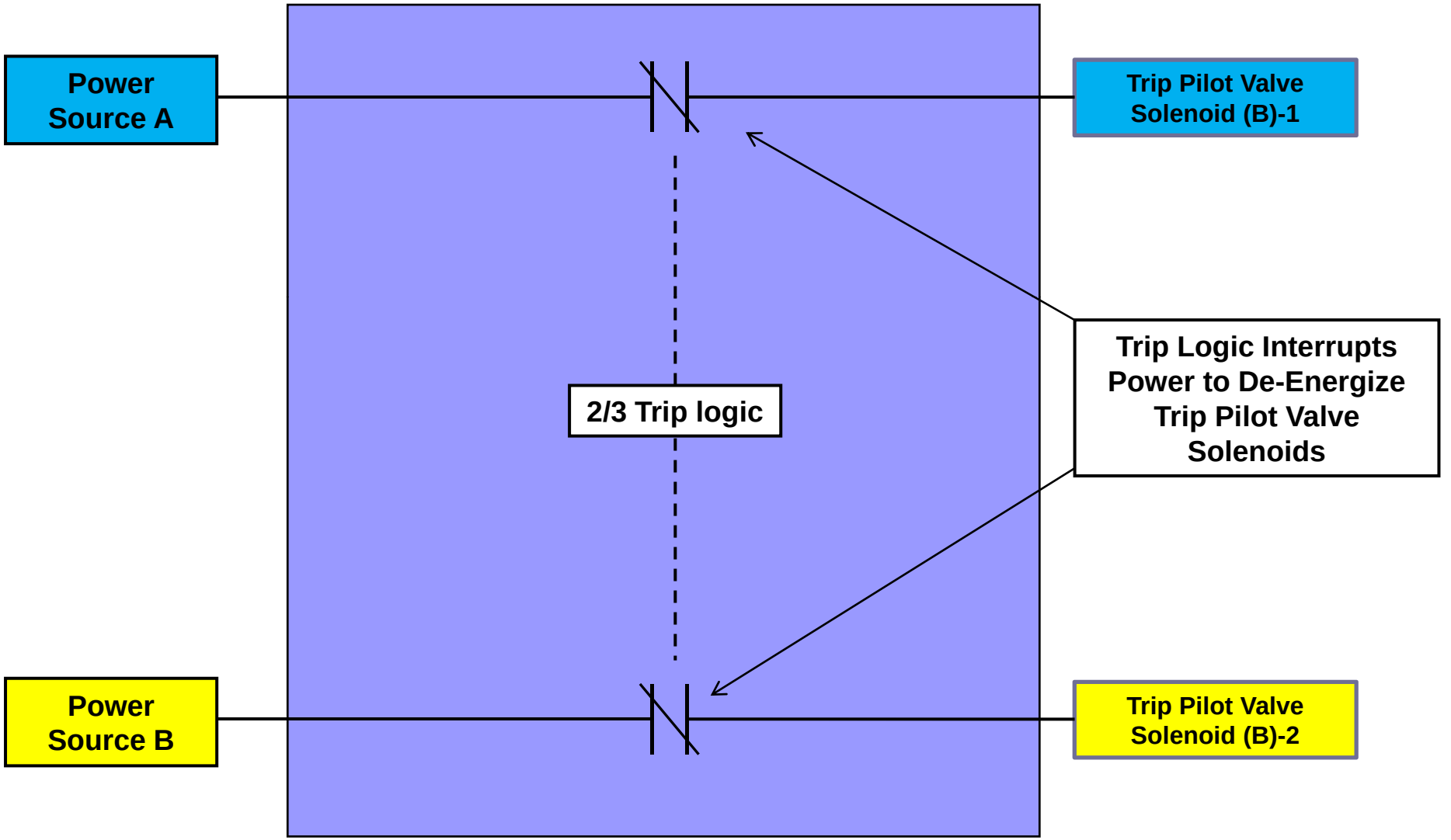

Primary Overspeed Trip and Emergency Overspeed Trip Functions

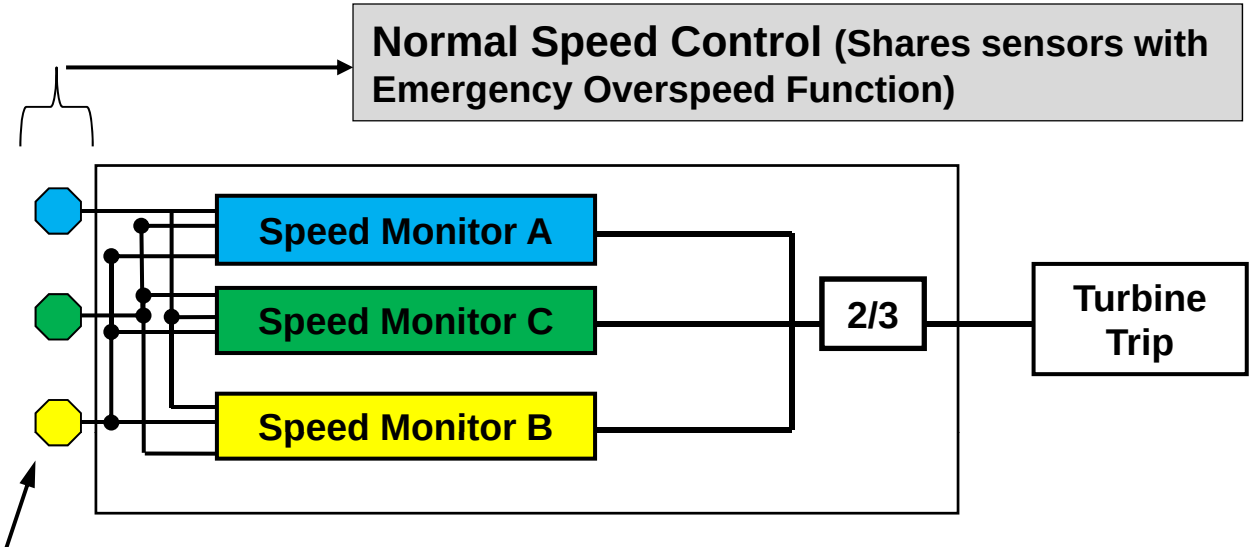

3 Speed Pickups (Active) for Emergency Overspeed Trip Function
(Active detector needs power supply)

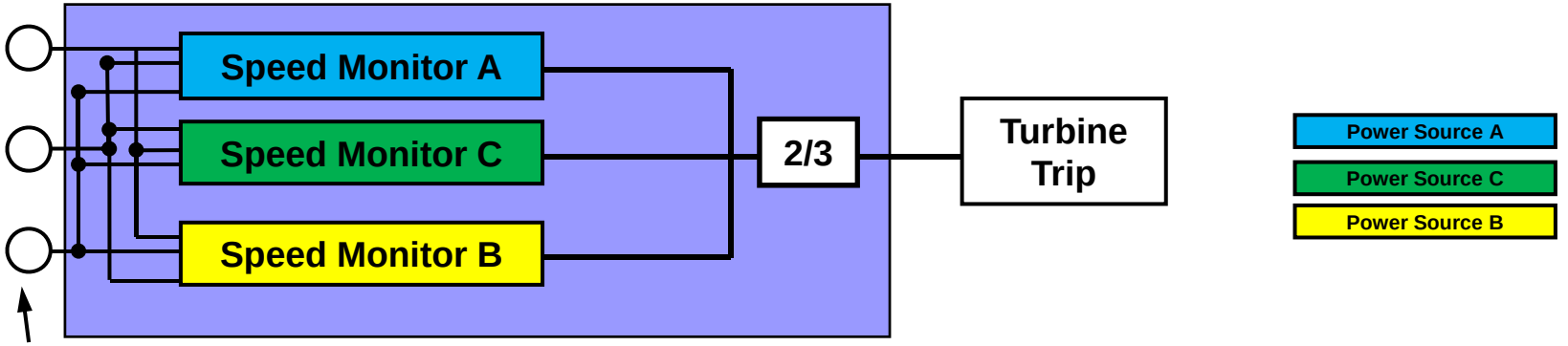

3 Speed Pickups (Passive) for Primary Overspeed Trip Function
(Each passive detector needs no power supply)

Summary of Turbine Overspeed Protection including Power Sources

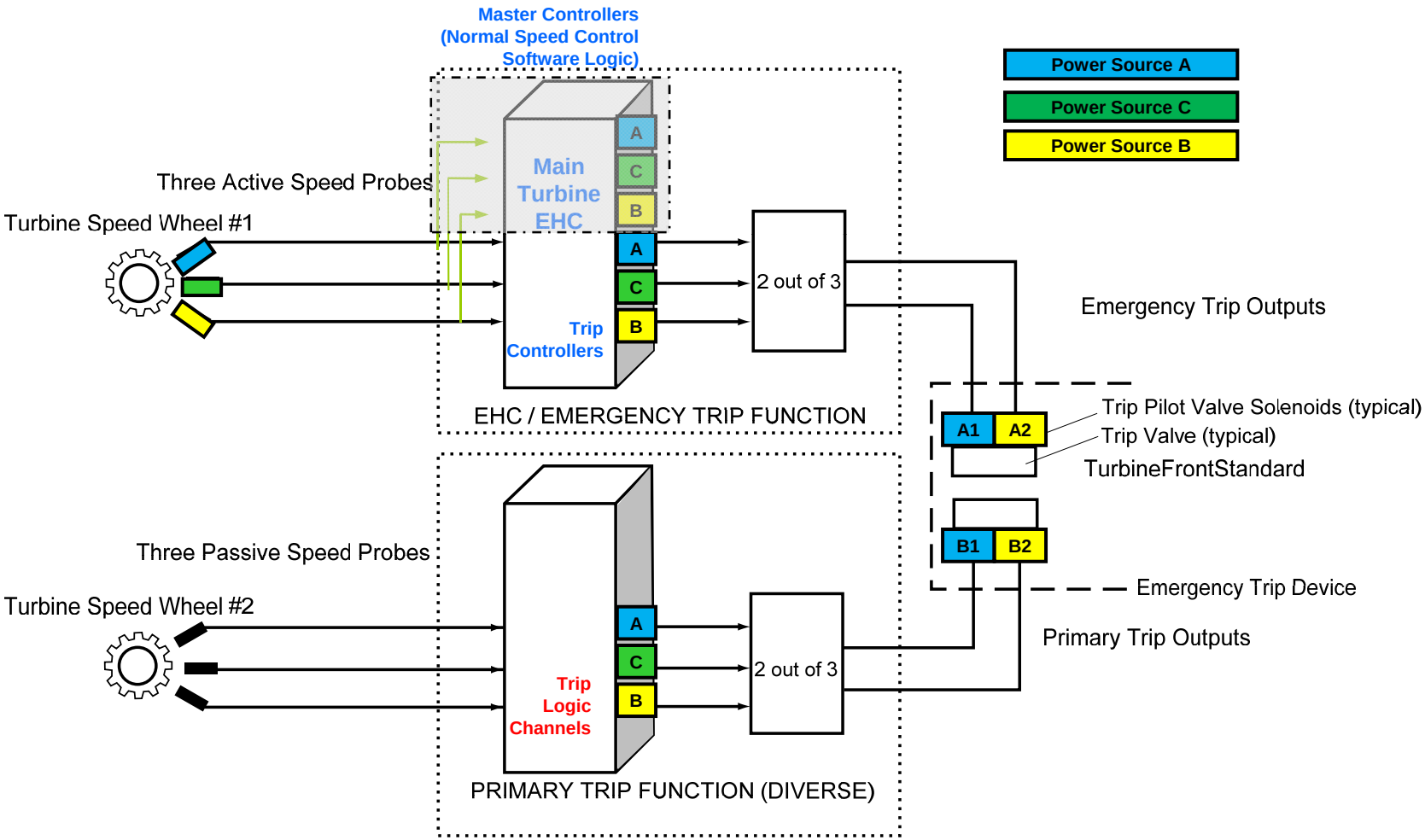

SRP 10.2 Section III.2.C Review Guidance

- **SRP 10.2 III 2.C "REVIEW PROCEDURE"**
  - *"mechanical overspeed trip device will actuate the control, stop, and intercept valves"*
    - Primary overspeed trip is implemented electronically rather than mechanically
    - Primary overspeed trip maintains diversity from emergency overspeed trip.

SRP 10.2 Section III.2.D Review Guidance

- **SRP 10.2 III 2.D "REVIEW PROCEDURE"**
  - *"An independent and redundant backup electrical overspeed trip circuit"*
    - Two redundant, independent and diverse overspeed trip functions – Primary and Emergency
  - *"backup electrical overspeed trip system may use the same sensing techniques as the electrohydraulic control system (EHC)"*
    - Normal turbine speed control function and emergency overspeed trip function utilize the same speed probes
  - *"control signals from the two systems and are isolated from, and independent of, each other"*
    - Emergency overspeed trip function is implemented in three separate trip controllers that are independent of, and isolated from, the normal speed controllers.
    - Emergency overspeed trip function shares speed sensors with the normal speed control as permitted by SRP.

SRP 10.2 Section III.2 Review Guidance

- **SRP 10.2 III 2 "REVIEW PROCEDURE" Compliance Summary**
  - Primary overspeed trip function, combined with the emergency overspeed trip function of the turbine control system, provide redundancy and diversity at least equivalent to the recommendations for turbine overspeed protection found in III.2 of Standard Review Plan (NUREG-0800) Section 10.2.

Proposed Site Specific ITAAC

Design Commitment	Inspection, Test, Analyses	Acceptance Criteria
The trip signals from the two turbine electrical overspeed protection trip functions are isolated from, and independent of, each other	Inspection will be performed verifying that the two turbine electrical overspeed protection functions have diverse hardware and software/firmware.	A report exists and concludes that the two electrical overspeed protection functions have diverse hardware and software/firmware.

Questions and Comments