February 25, 2011

EN 46001

Mr. Roger P. Cochrane, General Manager
Babcock and Wilcox Nuclear Operations Group, Inc.
P.O. Box 785
Lynchburg, VA 24505-0785

SUBJECT: INSPECTION REPORT NO. 70-0027/2011-201

Dear Mr. Cochrane:

The U.S. Nuclear Regulatory Commission (NRC) conducted a routine announced nuclear criticality safety (NCS) inspection at your Babcock and Wilcox Nuclear Operations Group, Inc. facility in Lynchburg, Virginia, January 24-28, 2011. The purpose of the inspection was to determine whether activities involving special nuclear materials were conducted safely and in accordance with regulatory requirements. Observations and findings were discussed with members of your management and staff throughout the inspection and at an exit meeting held on January 27, 2011.

The inspection, which is described in the enclosure, focused on the most hazardous activities and plant conditions; the most important controls relied on for safety and their analytical basis; and the principal management measures for ensuring controls are available and reliable to perform their functions relied on for safety. The inspection consisted of analytical basis review, selective review of related procedures and records, examinations of relevant NCS-related equipment, interviews with NCS engineers and plant personnel, and facility walkdowns to observe plant conditions and activities related to safety basis assumptions and related NCS controls.

In accordance with Title 10 of the *Code of Federal Regulations* 2.390 of NRC's "Rules of Practice," a copy of this letter and the enclosure will be made publicly available in the public electronic reading room of the NRC's Agency-Wide Document Access and Management System (ADAMS). ADAMS is accessible from the NRC Web site at http://www.nrc.gov/reading-rm/ADAMS.html.

If you have any questions concerning this report, please contact Dennis Morey, of my staff, at 301-492-3112.

Sincerely,

/RA/

Patricia A. Silva, Chief
Technical Support Branch
Division of Fuel Cycle Safety
and Safeguards
Office of Nuclear Material Safety
and Safeguards

Docket No.: 70-27
License No.: SNM-42

Enclosure: Inspection Report No. 70-0027/2011-201

cc: Barry Cole
Licensing Officer
Babcock and Wilcox Nuclear Operations Group, Inc.

If you have any questions concerning this report, please contact Dennis Morey, of my staff, at 301-492-3112.

Sincerely,

/RA/

Patricia A. Silva, Chief
Technical Support Branch
Division of Fuel Cycle Safety
and Safeguards
Office of Nuclear Material Safety
and Safeguards

Docket No.: 70-27
License No.: SNM-42

Enclosure: Inspection Report No. 70-0027/2011-201

cc: Barry Cole
Licensing Officer
Babcock and Wilcox Nuclear Operations Group, Inc.

DISTRIBUTION:
TSB r/f MBaker, FCSS SSubosits, RII SVias, RII KMcCallie, RII
JPelchat, RII

ML110380395

OFFICE	TSB	TSB	TSB	TSB
NAME	DMorey	ASotomayor	PJenifer	PSliva
DATE	2/15/11	2/8/11	2/10/11	2/25/11

OFFICIAL RECORD COPY

U. S. NUCLEAR REGULATORY COMMISSION
OFFICE OF NUCLEAR MATERIAL SAFETY AND SAFEGUARDS

Docket No.:	70-27
License No.:	SNM-42
Report No.:	70-27/2011-201
Licensee:	Babcock and Wilcox Nuclear Operations Group, Inc.
Location:	Lynchburg, Virginia
Inspection Dates:	January 24-28, 2011
Inspectors:	Dennis Morey, Senior Criticality Safety Inspector Alexis Sotomayor-Rivera, Criticality Safety Reviewer
Reviewed by:	Chris Tripp, Senior Criticality Safety Reviewer
Approved by:	Patricia A. Silva, Chief Technical Support Branch Division of Fuel Cycle Safety and Safeguards Office of Nuclear Material Safety and Safeguards

Enclosure

EXECUTIVE SUMMARY

Babcock and Wilcox Nuclear Operations Group, Inc.
NRC Inspection Report 70-27/2011-201

Introduction

Staff of the U.S. Nuclear Regulatory Commission (NRC) performed a routine and announced nuclear criticality safety (NCS) inspection of the Babcock and Wilcox (B&W) Nuclear Operations Group, Inc., Lynchburg, Virginia (VA), facility from January 24-28, 2011. The inspection included an on-site review of the licensee's NCS program, NCS-related inspections, audits and investigations, plant operations and open item review. The inspection focused on risk-significant fissile material processing activities including fuel fabrication and machining; the uranium recovery area; the Research, Test Reactor and Target (RTRT) area; the Specialty Fuels Facility (SFF); Advanced Gas Reactor (AGR) Compact Area; and the core assembly area.

Results

- No safety concerns were identified regarding the licensee's NCS program or the development, review, or approval of NCS analysis or calculations or resulting NCS controls.

- No safety concerns were noted regarding licensee identified NCS-related events including identification and tracking of corrective actions.

- No safety concerns were identified regarding licensee NCS audits.

- No safety concerns were identified regarding the licensee's controlled access areas coverage of fissile material operations.

- No safety concerns were identified during facility walkdowns.

REPORT DETAILS

1.0 Summary of Plant Status

B&W Nuclear Operations Group, Inc., manufactures high-enriched uranium fuel, reactor core components and reactor cores at its facility near Lynchburg, VA. During the inspection, the licensee conducted routine fuel manufacturing operations and maintenance activities in the fuel fabrication areas. The uranium recovery area was shut down for semiannual inventory activities.

2.0 Nuclear Criticality Safety Program (IP 88015 & IP 88016)

a. Inspection Scope

The inspectors reviewed NCS analyses to determine that criticality safety of risk-significant operations was assured through engineered and human controls with adequate safety margin and preparation and review by qualified staff. The inspectors reviewed selected aspects of the following documents:

- NCS-2011-008, “Advanced Gas Reactor [AGR] Compacting Process,” dated January 12, 2011
- NCS-2011-007, “NCS Justification Analysis for the New Digital X-Rays System per SER [Safety Evaluation Report] 10-050 Phase 1,” dated January 12, 2011
- NCS-2011-005, “NCS Safety Analysis Moderation Limits for Groups of RTRT Gloveboxes,” dated January 11, 2011
- NCS-2011-003, “NCS Justification Analysis for New ATR [Advanced Test Reactor] Swage Machine placement,” dated January 6, 2011
- NCS Safety Analysis for SER 10-020 Phase 3 – AGR Compacting Process and Equipment (Heat Treatment)(Revised),” dated January 12, 2001
- NCS-2010-261, “NCS Safety Analysis for SER 10-049 Phase 01, Approval of 10 Location 2.5 Liter Rack with Poison (U) ,” dated December 23, 2010
- NCS-201-260, “NCS Evaluation for Recovery Drum Dryer System,” Rev. 0, dated December 10, 2010
- NCS-2010-253, “Reactivity Uncertainty Associated with Modeling of Chlorine in PVC Applications,” dated December 7, 2010
- NCS-2010-247, “Nuclear Criticality Safety Study of 2.5 liter Bottles of UNX Crystals,” dated November 24, 2010
- NCS-2010-246, “SCA [safety concern analysis] for MURR [Missouri University Research Reactor] Element Exceeding Design Drawing Tolerance,” dated December 15, 2010
- NCS-2010-221, “NCS Release Supporting NCS Posting for Central Vault Sample Room,” dated October 19, 2010
- NCS-2010-220, “Establishment of the Minimum Accident of Concern For Clad Operations,” dated October 18, 2010
- NCS-2010-201, “SCA for Minor Variation in Spacing Between Columns in the Scrubber/Titrator System,” dated September 29, 2010
- NCS-2010-168, “NCS Justification Analysis for Creating a Generic Pass-Through Posting,” dated October 19, 2010
- NCS-2010-142, “NCS Analysis for SER 10-0229 Phase I, Trough Pass-through Box Safety Analysis & System Modification”, dated September 15, 2010

b. Observations and Findings

The inspectors reviewed NCS approvals, NCS evaluations, and supporting calculations for new, changed, and other selected operations. Within the selected aspects reviewed, the inspectors determined that the analyses were performed by qualified NCS engineers, that independent reviews of the evaluations were completed by qualified NCS engineers, and that the analyses provided for sub-criticality of the systems and operations. The inspectors observed that the analyses contained appropriate limits on controlled parameters for each credible accident sequence leading to inadvertent criticality. Nuclear criticality safety analyses and supporting calculations demonstrated adequate identification and control of NCS hazards to assure operations within subcritical limits.

c. Conclusions

No safety concerns were identified regarding the licensee's NCS program or the development, review, or approval of NCS analysis or calculations or resulting NCS controls.

3.0 Nuclear Criticality Safety Event Review and Follow-Up (IP 88015 & IP 88016)

a. Inspection Scope

The inspectors reviewed the licensee response to internally reported events. The inspectors reviewed the progress of investigations and interviewed licensee staff regarding immediate and long-term corrective actions. The inspectors reviewed selected aspects of the following documents:

- NCS-2011-006, "Safety Concern Analysis for NIST [National Institute of Standards & Technology] Elements Exceeding Design Drawing Tolerance (CA-201003178)," Dated January 13, 2011
- NCS-2011-003, "NCS Justification Analysis for CR-1034590, "New ATR Swage Machine Placement" (U)," Dated January 6, 2001
- NCS-2010-265, "SCA for Conversion Facility Rack Loaded with Bottles having Improperly ^{235}U Values (CA-201003325)," Dated January 7, 2011
- NCS-2010-258, "SCA for Unsampled Retention Tank Discharge (CA-201003172)," dated December 8, 2010
- NCS-2010-246, "SCA for MURR Element Exceeding Design Drawing Tolerance (CA-201003178)," dated December 15, 2010
- NCS-2010-243, "SCA for the NCS Posting for TDC [Technology Development Core] and VFF [Virginia Forward Fit] Development per CA-1034991 (U)," dated November 23, 2010
- NCS-2010-241, "NCS Justification Analysis to Make Moderation Control Signs a Controlled NCS Posting (CA-200800259)," dated November 18, 2010
- NCS-2010-240, "SCA for Incorrect Container in Bay 3A Vault (CA-2010029117)," Dated November 18, 2010
- NCS-2010-235, "SCA for Improper Orientation of ATR Dummy Non-Fuel Components (CA-201002710)," Dated November 11, 2010

- NCS-2010-221, “Nuclear Criticality Safety Release Supporting CR-1034004, “NCS Posting for Central Vault Sample Room” (U),” Dated October 19, 2010
- NCS-2010-205, “SCA for Improper Element Orientation on Handwork Table (CA-201002340),” Dated September 30, 2010
- NCS-2010-201, “SCA for Minor Violation in Spacing Between Columns in the Scrubber/Titrator System,” Dated September 29, 2010
- Corrective Action (CA) 201002710, “Dummy Fuel Components Improperly Stacked,” dated November 1, 2010
- CA 201002917, “Improper Items in Vault Storage Rack,” dated November 16, 2010
- CA 201002340, “Item Stored in Violation of Slab Height Limit,” dated September 27, 2010
- CA 201002325, “Spacing Reduced by Broken Column Bracket,” dated September 27, 2010

b. Observations and Findings

The inspectors reviewed selected licensee internally-reported events. The inspectors determined that internal events were investigated in accordance with written procedures and appropriate corrective actions were assigned. The inspectors had no safety concerns regarding the licensee’s reporting, investigation, and correction of internal NCS related events.

c. Conclusions

No safety concerns were noted regarding licensee identified NCS-related events including identification and tracking of corrective actions.

4.0 Nuclear Criticality Safety Inspections, Audits, and Investigations (IP 88015)

a. Inspection Scope

The inspectors reviewed results of the most recent NCS quarterly audit to assure that appropriate issues were identified and resolved. The inspectors reviewed selected aspects of the following documents:

- NCS-2011-001, “NCS Violations & Observations Summary – 4th Quarter 2010”, dated January 20, 2011
- NCS-2010-214, “NCS Violations & Observations Summary – 3rd Quarter 2010”, dated October 21, 2010

b. Observations and Findings

The inspectors determined that the licensee’s NCS audits were conducted in accordance with written procedures. The inspectors noted that the audits were performed by NCS engineers who reviewed open NCS issues from previous audits; reviewed new violations that occurred during the audit quarter; reviewed the adequacy of control implementation; reviewed plant operations for compliance with license requirements, procedures, and postings; examined equipment and operations to determine that past evaluations remained adequate; and analyzed non-compliances for potential trends.

c. Conclusions

No safety concerns were identified regarding licensee NCS audits.

5.0 Criticality Accident Alarm System (IP 88017)

a. Inspection Scope

The inspectors reviewed documentation of criticality accident alarm system (CAAS) coverage, interviewed engineering and maintenance staff, and performed facility walkdowns to determine the adequacy of the licensee CAAS. The inspectors reviewed selected aspects of the following documents:

- RP [Report]-07-28, "Maintaining and Testing the Plant Criticality Monitoring System and radiation monitoring system (RMS) II Area Monitors," Revisions 24, dated January 10, 2011
- RP-28, Form 1, Rev 23.0, "RMS II Area Monitor Monthly Check," dated November 15, 2010
- RP-07-28, Form 10, Rev. 23.0, "Functionality Test of EAS Horns and Lights at NOG-L," dated November 15, 2010
- RP-07-28, Form 12, Rev. 24.0, "Security Notification of Monthly Criticality Monitoring System Check," dated January 10, 2011

b. Observations and Findings

In selected facility areas, the inspectors verified that the licensee's placement of criticality accident alarm detectors has been established in accordance with the criteria described in Title 10 of the *Code of Federal Regulations* (10 CFR) 70.24. The inspectors were present when the licensee was testing the criticality alarm system. Also, the inspectors reviewed licensee procedures for maintaining and testing the criticality alarm system and observed the monthly check of the monitoring system. No safety concerns were identified with the licensee practices regarding maintenance of the criticality alarm system.

c. Conclusions

No safety concerns were identified regarding the licensee's CAAS coverage of fissile material operations.

6.0 Plant Operations (IP 88015)

a. Inspection Scope

The inspectors performed plant walkdowns to review activities in progress and to determine whether risk-significant fissile material operations were being conducted safely and in accordance with regulatory requirements. The inspectors interviewed operations staff and NCS engineers both before and during walkdowns.

b. Observations and Findings

The inspectors performed walkdowns in risk-significant fissile material processing activities including fuel fabrication and machining; the uranium recovery area; the RTRT area; the SFF; AGR Compact Area; and the core assembly area. The inspectors verified that controls identified in NCS analyses were installed or implemented and were adequate to ensure safety. The inspectors also verified that safety was maintained for observed facility operations. The cognizant, NCS engineers were knowledgeable and interacted regularly with operators on the process floors. The inspectors verified the adequacy of management measures for assuring the continued availability, reliability, and capability of safety-significant controls relied upon by the licensee for controlling criticality risks.

c. Conclusions

No safety concerns were identified during facility walkdowns.

7.0 Open Item Review

IFI 70-27/2010-201-01

This item tracks revision of validation and supporting calculations to adequately justify use of polyvinyl chloride (PVC) piping as a neutron absorber. During a previous inspection, the inspectors noted that the criticality analysis for PVC piping took credit for the thickness and density of the piping as a neutron absorber in some models. The inspectors questioned whether PVC was properly validated for use in these calculations. The licensee planned to revise the PVC piping analysis to evaluate the sensitivity of these models to chlorine and enhance the validation by adding more experiments containing chlorine. The inspectors reviewed the following document:

- NCS-2010-253, “Reactivity Uncertainty Associated with Modeling of Chlorine in PVC Applications,” dated December 7, 2010.

The International Handbook of Evaluated Criticality Safety Benchmark Experiments (IHECSBE) contains only a few benchmarks that include chlorine. The benchmarks chosen by the licensee were HEU-SOL-THERM [HST]-044 (Cases 7 and 49) and LEU-COMP-THERM [LCT]-045 (Cases 6, 18, and 19). The HST-044 cases involved a high-enriched uranyl nitrate solution tank with stainless steel rods containing PVC material. The LCT-045 cases involved stacks of U_3O_8 blocks—enriched to 4.46wt% ^{235}U—with Plexiglas and PVC sheets between the blocks. The licensee modeled these benchmarks with TSUNAMI-3D. The licensee also developed a model for facility analysis consisting of a 5” PVC pipe, filled with optimally moderated uranyl nitrate solution (400 gU/l), surrounded by 12” of water which is the bounding case model in question.

The purpose of modeling the 5 benchmarks and the bounding case with TSUNAMI-3D was to determine the sensitivity to chlorine. The stoichiometric formula for PVC is H_3C_2Cl at 1.35 g/cm^3 and the only component not present in other commonly validated materials is chlorine. Chlorine is a relatively weak neutron absorber; the total cross section (taken from the ENDF/B-VII cross section library) is shown below in **Figure 1** for

^{35}Cl (natural abundance 75.8%) and ^{37}Cl (natural abundance 24.2%), with the total cross section for ^{10}B shown for comparison.

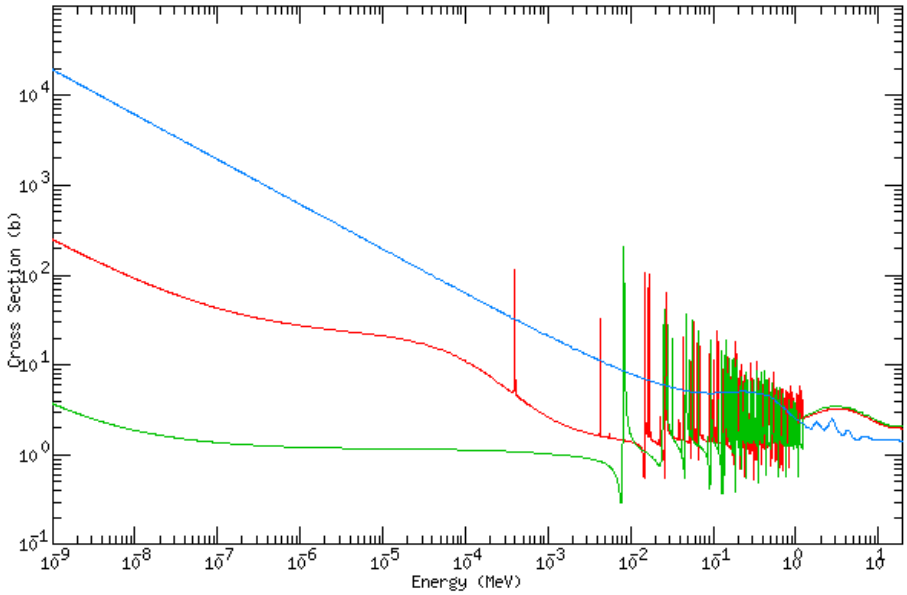

Figure 1 Total cross section: ^{35}Cl = red, ^{37}Cl = green, ^{10}B = blue

Absorption is the dominant reaction in the thermal energy range and, while chlorine is predominantly a thermal neutron absorber, it is roughly 1/100th as strong an absorber as boron at a given thermal energy.

The licensee concluded that the effect of chlorine is sufficiently small that any reasonable error in the cross section would have a negligible effect on the bias which was demonstrated two ways: (1) by direct perturbation (checking sensitivity of k_{eff} as a function of absorber density); and (2) by calculating sensitivity coefficients with TSUNAMI. Direct perturbation showed that a 25% reduction in the PVC density would only produce a 1.4% change in k_{eff}. Such a deviation greatly exceeds any credible error in the measured cross sections or uncertainty in the density. TSUNAMI also showed that the sensitivity to chlorine was extremely small. The measured cross section uncertainty for natural chlorine (75.8% ^{35}Cl + 24.2% ^{37}Cl) is on the order of 1% for the dominant reaction, Cl(n,γ). This was converted to a δk value by the equation:

$$S = \frac{\delta k}{k} / \frac{\delta \sigma}{\sigma}$$

with S calculated by TSUNAMI, k being whatever is calculated (being ~1), and δσ/σ being ~1%. This resulted in a δk ~0.063%, which is much less than the calculated bias of 1.5% and which the inspectors considered reasonable.

The inspectors explicitly modeled the 5" cylinder model with and without the PVC included. To simplify and speed up the calculation, TSUNAMI-1D was run for an infinitely long cylinder. Case PVC001 had the PVC explicitly included, and yielded a k_{eff} = 0.84966. Case PVC002 had the absorber replaced by void, and yielded a k_{eff} = 0.92264. The effect of the PVC can be seen in the Javapeño plot in **Figure 2**.

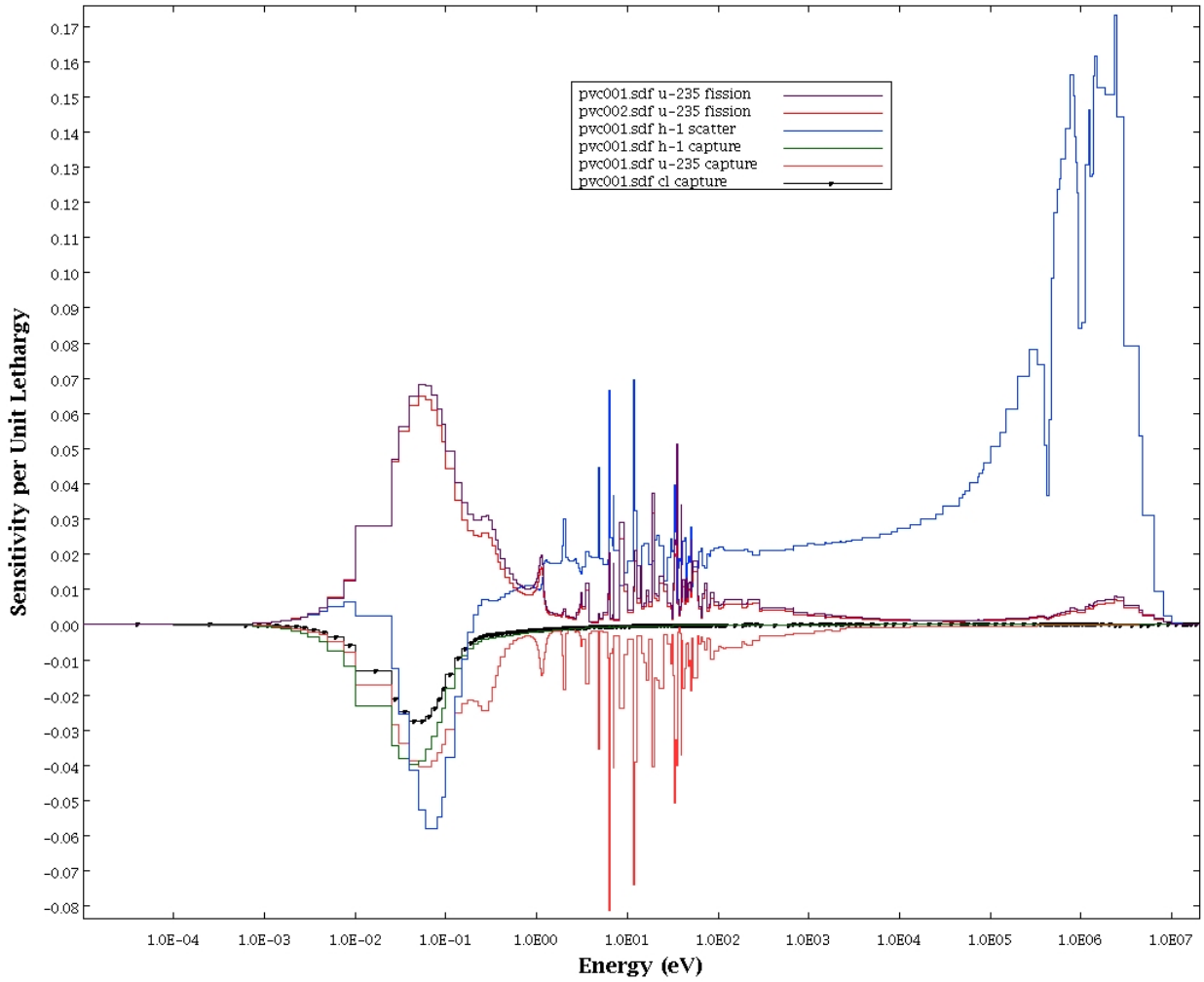

Figure 2 Sensitivity Profiles for Dominant Nuclide-Reactions in 5" PVC Cylinder

This gives the PVC absorber a worth of ~7.3%. The inspectors noted that multiplying the sensitivity coefficient by a $\delta\sigma/\sigma$ of 100% resulted in 6.3%, which agrees with the direct perturbation model. The inspectors compared these two cases with TSUNAMI-IP to determine the correlation c_k. The value of c_k thus determined was 0.9973, indicating excellent agreement.

Shown in **Figure 2** are some of the dominant nuclide-reaction pairs, compared to the chlorine (n,γ) profile. Also shown are the ^{235}U fission profiles with and without the PVC included. This shows that: (1) chlorine is only important in the thermal range; (2) chlorine is much less important than other key nuclides (^{235}U and H); and (3) the presence of chlorine makes only a very small difference in the fission spectrum (which follows a similar shape to the sensitivity profile). The inspectors determined that the licensee's claim that chlorine has only a negligible effect on the bias is justified. The inspectors agreed with the licensee's conclusions, subject to the following limitations:

- The negligible effect of the chlorine has only been demonstrated for the high-enriched case, though we expect similar behavior for LEU.

- The conclusion is based on a very limited study, but should be valid as long as applications do not have significantly more neutron absorber worth than the five benchmarks.

The licensee document that initiated the inspector follow-up item (IFI) was NCS-2010-115, "Heated Expanded PVC 5-inch and 4-inch Columns in Recovery and Low Level Dissolution Areas (U)," dated August 31, 2010. During the previous inspection, the inspectors questioned whether the conclusions in the validation study (NCS-2010-253) were applicable to this specific system.

Specifically, the inspectors questioned whether the PVC is more strongly relied on in NCS-2010-115 than it was in the sensitivity study (NCS-2010-253). While varying concentrations were used in the calculation and additional containers were placed around the columns in some models, the analysis in NCS-2010-115 dealt with a well-thermalized high-enriched uranyl nitrate solution. Wall thicknesses were similar, being assumed to be eroded 50% in each study. Although the new calculations in NCS-2010-115 have an array of columns, rather than just a single column as in the sensitivity study, the inspectors noted that the optimal interstitial moderation, for the four low-level dissolver columns, occurs at full flooding, and therefore, the columns are a weakly coupled system. Under full flooding conditions, any extra reactivity effect due to suppression of neutron interaction can be neglected. While NCS-2010-115 does not directly show the reactivity effect of the PVC, it does show that any reactivity effect is comparable to an increase of 0.3 inches in the columns' outer diameter which is not expected to be substantially greater than the reactivity effect in the sensitivity study. The inspectors determined that the results of the sensitivity study are applicable to NCS-2010-115.

The inspectors determined that chlorine has a negligible effect on benchmark applicability for systems consisting of high-enriched solution in PVC pipes, either in single columns or loosely coupled arrays. This item is closed.

VIO 70-27/2010-003-02

This violation tracks the failure to conduct an NCS evaluation and establish and maintain NCS items relied on for safety (IROFS) against the accumulation of fissile solution in an unsafe geometry pass-through glovebox. During a previous inspection, the inspectors determined that the original analysis for the high-level dissolver enclosure in the uranium recovery (UR) area did not anticipate or analyze for the presence of solution or material being left in the pass-through glovebox. As a result, the licensee had failed to analyze the accident sequence of fissile solution accumulation in the pass-through glovebox and therefore failed to establish IROFS to prevent a nuclear criticality accident.

<u>Inspection 70-27/2010-003 Results</u>

During inspection 70-27/2010-003, the inspectors reviewed event notification (EN) 46001 involving the discovery of fissile solution in a glovebox in the high-level dissolver enclosure in the UR area. The inspectors determined that the licensee dissolves high-enriched uranium in two trough dissolvers in the uranium recovery area. The trough dissolvers are part of a large enclosure consisting of six gloveboxes and an ante-chamber. The enclosure arrangement (shown in **Figure 1**) consists of two column

dissolver gloveboxes, two trough dissolver gloveboxes, two pass-through gloveboxes each connecting a column dissolver glovebox with a trough dissolver glovebox and an ante-chamber connecting the two column dissolver gloveboxes. The column dissolver and trough dissolver gloveboxes have multiple drains but the pass-through gloveboxes did not have drains.

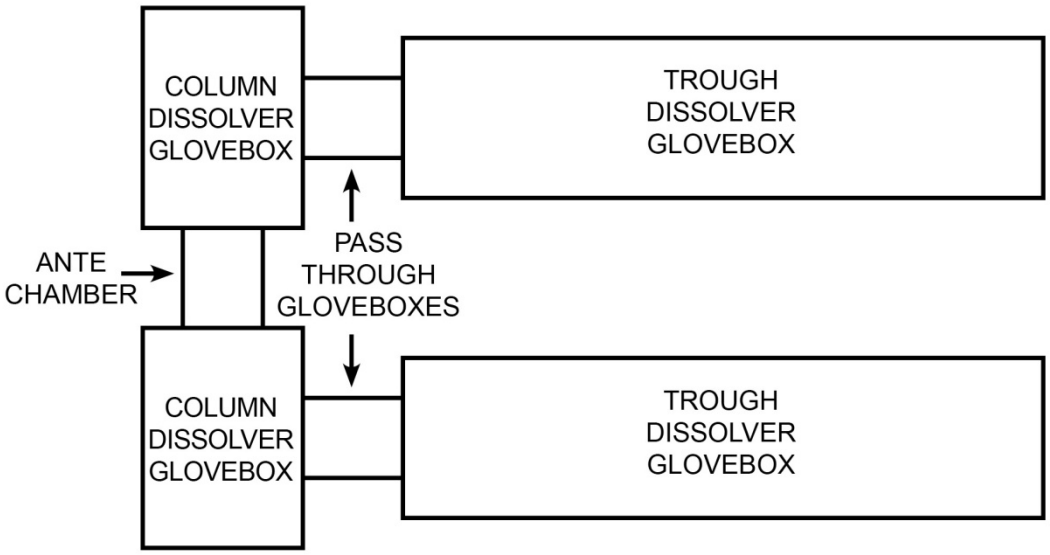

Figure 1 – High-Level Dissolver Enclosure Top View

Following glovebox flushing operations on June 11, 2010, UR area operators observed approximately one-liter of solution at the bottom of one of the pass-through gloveboxes in the high-level dissolver enclosure. The concentration of the solution was determined to be 26 grams U-235/liter. After the event the licensee cleaned both pass-through gloveboxes to remove any residual material that was in the pass-through gloveboxes. The licensee measurements indicated that a total of 111.65 grams of solid U-235 was removed. The licensee determined that presence of fissile solution in the pass-through glovebox represented an unanalyzed condition that failed to meet the performance requirements for a criticality-related accident sequence.

Following clean-out of the residual material in the pass-through gloveboxes, the licensee shut down the system and initiated a corrective action (CA201001322) to investigate the event. The investigation determined that fumes from dissolution of uranium in the trough dissolver entered the pass-through glovebox over time and adhered to the inner walls. Also, aqueous solution entered the pass-through glovebox from the trough dissolver through the hatchway during trough dissolver cleaning operations between dissolution batches when the water hose is directed at the hatchway. This resulted in fissile solution in the bottom of the pass-through glovebox where it was difficult to see due to the enclosure configuration and lighting. The licensee investigation did not identify fume penetration into the ventilation system.

The inspectors reviewed the criticality safety analysis for the process and interviewed the responsible criticality engineer. The original analysis for the process did not anticipate or analyze for the presence of solution or material being left in the pass-through glovebox. The inspectors determined that the 26 grams U-235/liter solution that

was found in the pass-through glovebox was below the license limit of 573 grams of U-235 for a fully reflective system (k-effective = 0.95).

The inspectors determined that operators halted the operation when the solution was discovered thus demonstrating the effectiveness of procedural requirements and operator training. The inspectors also noted that the only other potential source of additional solution were the trough dissolvers themselves and that criticality controls, including drains, on that system prevented the rapid addition of more fissile solution into the pass-through glovebox.

Review of Corrective Actions

During the current inspection, the inspectors reviewed the revised analysis for the high-level dissolver and corrective actions for the pass-through glovebox event. Corrective action CA 201001322, “Pass Through Glove box Event,” dated June 11, 2010 consisted of:

- Commitment (COM) 33019, “NCS Evaluation Implementation,” including, installing drains in the pass-through glovebox and implementing administrative limits on mass, container piece count, and container volume and spacing.
- COM 33030, “Repair Gaskets on Glovebox Doors,” to minimize leaks from the dissolver enclosure into the pass-through glovebox.
- COM 33031, ”Revise Glovebox Operating Procedure OP-0061232,” to perform a thorough cleaning of the pass-through glovebox during each inventory.
- COM 34152, “Revise Quality Work Instruction QWI 4.1.5 to Evaluate Gloveboxes,” to provide design guidance, including the use of independent drains, for gloveboxes with the potential to accumulate fissile solutions,

The inspectors determined that the licensee corrective actions adequately resolved the analytical concern identified by the event. The inspectors performed a walkdown of the high-level dissolve, interviewed the responsible criticality safety engineer regarding status of corrective actions for the system, and reviewed the revised documents identified above. The inspectors determined that all corrective actions for EN 46001 were complete. This item is closed.

8.0 Exit Meeting

The inspectors presented the inspection scope and results to members of the licensee’s management and staff during an exit meeting on January 27, 2011. The licensee acknowledged and understood the findings as presented.

SUPPLEMENTARY INFORMATION

1.0 List of Items Opened, Closed, and Discussed

Items Opened

None

Items Discussed

None

Items Closed

IFI 70-27/2010-201-01	Tracks revision of validation and supporting calculations to adequately justify use of PVC piping as a neutron absorber.
VIO 70-27/2010-003-02	Failure to conduct an NCS evaluation and establish and maintain NCS IROFS against the accumulation of fissile solution in an unsafe geometry pass-through glovebox.

2.0 Inspection Procedures Used

IP 88015	Nuclear Criticality Safety Program
IP 88016	Nuclear Criticality Safety Evaluations and Analyses
IP 88017	Criticality Accident Alarms

3.0 Partial List of Persons Contacted

B&W NOG

D. Faidley	Manager, Nuclear Criticality Safety
L. Wetzel	Senior Engineer, Nuclear Criticality Safety
B. Cole	Manager, Licensing and Safety Analysis
D. Ward	Manager, EHS&S
D. Spangler	Nuclear Safety & Licensing

NRC

D. Morey	Senior Criticality Safety Inspector, NRC Headquarters
A. Sotomayor-Rivera	Criticality Safety Inspector, NRC Headquarters
S. Subosits	Senior Resident Inspector, NRC Region II

4.0 List of Acronyms

B&W	Babcock and Wilcox
CA	Corrective Action
CAAS	criticality accident alarm system
COM	Commitment
IFI	inspector follow-up item
IP	inspection procedure
IROFS	items relied on for safety
NCS	nuclear criticality safety
PVC	Polyvinyl Chloride
RTRT	Research, Test Reactor and Target
SCA	safety concern analysis
SER	Safety Evaluation Report
SFF	Specialty Fuels Facility
SNM	Special Nuclear Material
VFF	Virginia Forward Fit