NEXTera ENERGY SEABROOK

February 3, 2011

SBK-L-11015
Docket No. 50-443

U.S. Nuclear Regulatory Commission
Attention: Document Control Desk
One White Flint North
11555 Rockville Pike
Rockville, MD 20852

Seabrook Station
Response to Request for Additional Information
NextEra Energy Seabrook License Renewal Application
Sets 6, 7 and 8

References:

1. NextEra Energy Seabrook, LLC letter SBK-L-10077, "Seabrook Station Application for Renewed Operating License," May 25, 2010. (Accession Number ML101590099)
2. NRC Letter "Request for Additional Information Related to the Review of the Seabrook Station License Renewal Application (TAC NO. ME4028) – Aging Management Review-Set 6" January 5, 2011 (Accession Number ML103420585)
3. NRC Letter "Request for Additional Information Related to the Review of the Seabrook Station License Renewal Application (TAC NO. ME4028) – Time-Limited Aging Analysis – Set 7" January 5, 2011 (Accession Number ML103420587)
4. NRC Letter "Request for Additional Information Related to the Review of the Seabrook Station License Renewal Application (TAC NO. ME4028) – Scoping - Set 8" January 5, 2011 (Accession Number ML103420583)
5. NextEra Energy Seabrook, LLC letter SBK-L-11003, "Seabrook Station Response to Request for Additional Information, NextEra Energy Seabrook License Renewal Application Aging Management Programs – Set 5 ", January 13, 2011. (Accession Number (ML110140587)

In Reference 1, NextEra Energy Seabrook, LLC (NextEra) submitted an application for a renewed facility operating license for Seabrook Station Unit 1 in accordance with the Code of Federal Regulations, Title 10, Parts 50, 51, and 54.

A035
NRR

In References 2, 3 and 4, the NRC requested additional information in order to complete its review of the License Renewal Application (LRA). Enclosures 1 through 3 contain NextEra's response to the request for additional information and associated changes made to the LRA. For clarity, deleted LRA text is highlighted by strikethroughs and inserted texts highlighted by bold italics.

In Reference 5, a commitment was made to *"Implement the design change replacing the buried Auxiliary Boiler supply piping with a pipe-within-pipe configuration with leak detection capability"*. This commitment was inadvertently numbered 59 in error and should be commitment number 60. The updated commitment list Table A.3, Enclosure 2 to reference 5 should be discarded. The correction has been made and is reflected in Enclosure 4 to this letter.

Commitment number 61 is added to the License Renewal Commitment List and commitment number 44 has been revised by this letter. There are no other new or revised regulatory commitments contained in this letter. Enclosure 4 provides a revised LRA Appendix A - Final Safety Report Supplement Table A.3, License Renewal Commitment List, updated to reflect the license renewal commitment changes made in NextEra Energy Seabrook correspondence to date.

If there are any questions or additional information is needed, please contact Mr. Richard R.Cliche, License Renewal Project Manager, at (603) 773-7003.

If you have any questions regarding this correspondence, please contact Mr. Michael O'Keefe, Licensing Manager, at (603) 773-7745.

Sincerely,

NextEra Energy Seabrook, LLC.

Paul O. Freeman
Site Vice President

Enclosures:

Enclosure 1- Response to Request for Additional Information Seabrook Station License Renewal Application Aging Management Review – Set 6 and Associated LRA Changes

Enclosure 2- Response to Request for Additional Information Seabrook Station License Renewal Application Time-Limited Aging Analysis – Set 7, and Associated LRA Changes

Enclosure 3- Response to Request for Additional Information Seabrook Station License Renewal Application, Scoping Set 8 and Associated LRA Changes

Enclosure 4- LRA Appendix A - Final Safety Report Supplement Table A.3, License Renewal Commitment List, updated to reflect the license renewal commitment changes made in NextEra Seabrook correspondence to date.

cc:

W.M. Dean,	NRC Region I Administrator
G. E. Miller,	NRC Project Manager, Project Directorate I-2
W. J. Raymond,	NRC Resident Inspector
R. A. Plasse Jr.,	NRC Project Manager, License Renewal
M. Wentzel,	NRC Project Manager, License Renewal

Mr. Christopher M. Pope
Director Homeland Security and Emergency Management
New Hampshire Department of Safety
Division of Homeland Security and Emergency Management
Bureau of Emergency Management
33 Hazen Drive
Concord, NH 03305

John Giarrusso, Jr., Nuclear Preparedness Manager
The Commonwealth of Massachusetts
Emergency Management Agency
400 Worcester Road
Framingham, MA 01702-5399

NEXTera ENERGY SEABROOK

I, Paul O. Freeman, Site Vice President of NextEra Energy Seabrook, LLC hereby affirm that the information and statements contained within are based on facts and circumstances which are true and accurate to the best of my knowledge and belief.

Sworn and Subscribed

Before me this

3rd day of February, 2011

VICTORIA S. BROWN
MY COMMISSION EXPIRES DEC. 11, 2012
NOTARY PUBLIC
NEW HAMPSHIRE

Paul O. Freeman
Site Vice President

Victoria S. Brown

Notary Public

Enclosure 1 to SBK-L-11015

Response to Request for Additional Information
Seabrook Station License Renewal Application
Aging Management Review – Set 6

Request for Additional Information (RAI) 3.1.2.1-1

Background:

Generic Aging Lessons Learned (GALL) Report item IV. C2-3, recommends the Water Chemistry Program and a plant-specific aging management program (AMP) to manage cracking due to stress corrosion cracking (SCC) for cast austenitic stainless steel (CASS) Class 1 piping, piping elements and piping components. The GALL Report further recommends that the plant specific program include adequate inspection methods to ensure detection of cracks and flaw evaluation methodology for the components susceptible to thermal aging embrittlement based on the material susceptibility criteria described in NUREG-0313, Rev. 2.

License renewal application (LRA) Table 3.1.1, item 3.1.1-24 addresses CASS Class 1 pump casing, piping and fittings, and valve body exposed to reactor coolant, which are being managed for cracking due to SCC by the applicant's Water Chemistry Program and the ASME Section Xl lnservice Inspection Subsections IWB, IWC and IWD Program. LRA Section 3.1.2.2.7.2 states that the ASME Inservice Inspection Program relies on VT-2 examinations to identify and evaluate the degradation of the CASS components to ensure that there is no loss of intended function. The U.S. Nuclear Regulatory Commission (!\IRC or the staff) noted that a VT-2 examination detects leakage from pressure retaining components during a system leakage test.

In comparison with the VT-2 examination the applicant credited, the staff noted that as a typical example, Table IWB-2500-1 in the 1995 edition, including 1996 and 1997 addenda, of the ASME Code Section XI, includes the following requirements: (1) Item No. B9.11 requires surface and volumetric examinations of pressure retaining circumferential welds in piping NPS 4 or larger; (2) Item No. B12.10 requires volumetric examination of pump casing welds; (3) Item No. 12.30 requires surface examination of valve body welds for valves less than NPS 4; and (4) Item No. 12.40 requires volumetric examination of valve body welds for valves NPS 4 or larger. The staff further noted that ASME Code Case N-481 referenced in the LRA addresses a requirement for VT -1 examination of the external surfaces of the pump casing weld as part of the alternative to ASME Code Section XI, Examination Category B-L-1, Item No. 12.10.

Issue:

It is not clear to the staff whether the VT-2 visual examination specified in LRA Subsection 3.1.2.2.7.2 is the only technique that is credited to detect cracks for the applicant's management of the aging effect in the components. The staff noted that because the VT-2 examination relies on the detection of leakage, it does not provide detection of the aging effect prior to a loss of the intended function, which is pressure boundary integrity. In contrast, the volumetric examination can detect a crack before

leakage. The staff also noted that the surface examination or VT-1 examination provides the better resolution for detection of the aging effect than the VT-2 examination.

If VT-2 examination is the only examination method that is used to manage the aging effect, the staff needs justification for why the VT-2 examination method alone is adequate to manage cracking due to SCC of the CASS Class 1 components, such that the intended functions of the pressure boundary components will be maintained.

Request:

1. Clarify whether the VT-2 examination is the only method used to detect the aging effect in CASS Class 1 piping, piping elements and components.

   If the VT-2 examination is the only examination method used to detect the aging effect in the CASS Class 1 components, taking into account the ASME Code Section XI requirements for volumetric, surface and VT-1 examinations as applicable, justify why the use of the VT-2 examination without volumetric, surface. and VT-1 examinations is adequate to detect and manage the aging effect.

2. If another examination method such as volumetric, surface or VT-1 examination is used to manage the aging effect of the components, clarify what the examination method is. In addition, taking into account the ASME Code Section XI requirements for volumetric, surface, and VT-1 examinations as applicable, justify why the applicant's aging management method is adequate to detect and manage the aging effect.

NextEra Energy Seabrook Response:

1. The existing Seabrook Station Inservice Inspection program implements the ASME Section XI Subsections IWB, IWC, and IWD requirements.
   As shown in LRA Table 3.1.1-24, Seabrook Station credits the ASME Section XI Inservice Inspection Subsections IWB, IWC, and IWD Program to manage cracking due to SCC of the Class 1 CASS piping, piping components, and piping elements. The ASME Section XI Inservice Inspection, Subsections IWB, IWC, and IWD Program is implemented in accordance with the requirements of 10 CFR 50.55a, with specified limitations, modifications, NRC-approved alternatives, and applicable provisions of ASME Section XI.
   In the LRA, Seabrook Station inadvertently identified the VT-2 examination method approved for the present ISI interval as the only inspection method used under the License Renewal aging management program. Therefore, the following change is made to the license renewal application to clarify this issue:

In section 3.1.2.2.7.2, on page 3.1-13, revised the 2nd paragraph as follows:

Seabrook Station will implement the ASME Section XI Inservice Inspection, Subsections IWB, IWC, and IWD Program, B.2.1.1, which will be used to verify the effectiveness of the Water Chemistry Program, B.2.1.2, to manage stress corrosion cracking of the Class 1 cast austenitic stainless steel piping components in the Reactor Coolant and Safety Injection Systems. ~~The ASME Section XI Inservice Inspection, Subsections IWB, IWC, and IWD Program relies on VT-2 examinations to identify and evaluate the degradation of the CASS components to ensure that there is no loss of intended function.~~ The ASME Section XI Inservice Inspection, Subsections IWB, IWC, and IWD Program and the Water Chemistry Program are discussed in Appendix B.

2. The CASS components that have been assigned to this line item are the Class 1 Reactor Coolant system pump casings (1-RC-P-1-A, B, C, D), Class 1 Reactor Coolant system fittings (Hot Leg, Cold Leg, Surge Line and Spray line) and one Class 1 Safety Injection system valve (1-SI-V-130).

   The certified material test reports for the CASS Reactor Coolant system fittings were obtained and screening calculations were completed to show that thermal aging embrittlement for these components is not an aging effect that requires management during the extended period of operation. The CASS Reactor Coolant system fittings however, do not meet the reduced susceptibility screening guidelines from NUREG-0313, Rev 2 of <0.035% C and >7.5% ferrite. The carbon alloying and delta ferrite content of the reactor coolant pump casings and safety injection valve is either unknown or typically greater than these same criteria, which are stated in the discussion for NUREG-1801, Item IV.C2-3.

   Seabrook Station acknowledges that current UT examination methods are not adequate for reliable detection of cracks in CASS components. Seabrook Station follows the industry initiatives focused on the development of an ultrasonic examination technique that can be demonstrated through a program consistent with ASME Section XI, Appendix VIII.

   During the period of extended operation, should the Seabrook Station ASME Section XI Inservice Inspection, Subsections IWB, IWC, and IWD Program, with NRC-approved alternatives, require volumetric examinations be performed per ASME Section XI, Table IWB-2500-1, Examination Category B-J, on the Class 1 CASS pipe welds, then an ultrasonic examination method qualified under ASME Section XI, Appendix VIII will be utilized or an NRC-approved alternative (e.g., enhanced visual examination) will be implemented.

Request for Additional Information (RAI) 3.1.1.60-01

Background:

In LRA Table 3.1.1, item 3.1.1-60, the applicant stated that this item is not applicable to the Seabrook Station. The applicant stated that loss of material due to wear does not need to be identified and managed for the flux core thimble tubes, because Seabrook Station utilizes a double-concentric thimble tube design fabricated from wear resistant, seamless nickel alloy material (Inconel 600).

GALL Report item IV.B2-13 recommends GALL AMP XI.M37, "Flux Thimble Tube Inspection" to manage the loss of material due to wear for stainless steel flux thimble tubes (with or without chrome plating). The staff noted that GALL Report Section IV.B2 currently does not include an applicable generic AMR item for management of loss of material due to wear in flux thimble tubes fabricated from nickel alloy materials.

The "detection of aging effects" program element in GALL AMP XI.M37 states the following for inspections of Westinghouse design flux thimble tubes that are made from more wear resistant materials:

> If design changes are made to use more wear-resistant thimble tube materials (e.g., chrome-plated stainless steel) sufficient inspections will be conducted at an adequate inspection frequency, as described above, for the new materials.

Issue:

The staff noted that LRA Table 3.1.1, item 3.1.1-60 states that Seabrook Station uses flux thimble tubes fabricated from seamless nickel alloy material, specifically Inconel 600 and that this material is wear resistant. The staff noted that this is the applicant's basis for concluding that a Flux Thimble Tube Inspection Program does not need to be credited for aging management of loss of material due to wear in its flux thimble tubes.

GALL AMP XLM37 recommends the need to perform appropriate inspections of thimble tubes even if they are fabricated from improved wear-resistant materials, such as those that are fabricated from chrome-plated stainless steels or nickel alloy materials. GALL AMP XLM37 does not state that wear would not need to be managed if the flux thimble tubes are fabricated from improved wear-resistant materials.

Request:

Based on the recommendation in GALL AMP XI,M37 to perform inspections of flux thimble tubes that are fabricated from more wear-resistant materials, justify not including an applicable aging management review (AMR) line item to manage loss of material due to wear in the nickel alloy flux thimble tubes. Also, justify why a Flux Thimble Tube

Inspection Program is not credited to manage loss of material due to wear for these nickel alloy flux thimble tubes.

NextEra Energy Seabrook Response:

NUREG-1801, Rev. 1, Section XI.M37 (Flux Thimble Tube Inspection), provides the evaluation criteria and technical basis for preparing a program to demonstrate adequate aging management. The program requirement implements the recommendations of NRC bulletin 88-09 "Thimble Tube Thinning in Westinghouse Reactors" and is shown below.

"The Flux Thimble Tube Inspection is an inspection program used to monitor for thinning of the flux thimble tube wall, which provides a path for the incore neutron flux monitoring system detectors and forms part of the RCS pressure boundary. Flux thimble tubes are subject to loss of material at certain locations in the reactor vessel where flow-induced fretting causes wear at discontinuities in the path from the reactor vessel instrument nozzle to the fuel assembly instrument guide tube. An NDE methodology, such as eddy current testing (ECT), or other applicant-justified and NRC-accepted inspection method is used to monitor for wear of the flux thimble tubes."

The standard Westinghouse designed moveable incore system thimble tubes that are the subject of NRC Bulletin 88-09 are single walled tubes into which the moveable incore detectors are inserted and withdrawn as required to obtain incore flux mapping data. NRC Information Notice 87-44 "Thimble Tube Thinning in Westinghouse Reactors," dated September 16, 1987, discusses the thimble tube wall thinning concern, and Attachment 1 of IN 87-44 shows a typical Westinghouse incore neutron monitoring system. The thimble tubes serve as a portion of the RCS pressure boundary. The concern with this Bulletin is thimble tube thinning as a result of flow induced vibration. The thimble tube thinning results in a degradation of the RCS pressure boundary and may create a potential non-isolable RCS leak. The Seabrook Station thimbles originally installed employ unique design features that provide increased resistance to tube wall thinning from abrasive wear thereby providing in-depth protection against reactor coolant leakage that would result from a thimble tube wall failure. The following is specifically noted:

- The Seabrook Station incore thimbles are a non-standard design for Westinghouse reactors. The Seabrook Station design will accommodate both a moveable incore detector system as well as a fixed incore detector system. Therefore, the Seabrook Station thimbles are a double-concentric tube design fabricated from seamless Inconel 600. The thimble tube consists of an outer housing tube containing fixed incore detectors and a thermocouple on an inner calibration tube. The inner tube is considered the RCS pressure boundary and thus is not in direct contact with the reactor vessel components that cause wear in the standard single wall design. A failure of both the outer housing tube as well as the inner calibration tube would be required before reactor coolant could enter the inner portion of the Seabrook Station thimble tube.

- Since Seabrook Station operating Cycle 5, the moveable incore detector system has not been used and was placed into a lay-up condition during Refueling Outage 7 (Fall of 2000). As part of a design change "Movable Incore Detector System Lay-up", the seal table tubing between the inner calibration tubing and the isolation valves has been removed and the inner calibration tube has been capped to insure the integrity of the calibration tube and to provide a qualified pressure boundary. This additional qualified pressure boundary would need to fail (in addition to the outer housing and inner calibration tube failures) before a non-isolable leak of reactor coolant could occur.

The fixed incore detectors installed as part of the original thimble tubes at Seabrook Station were not designed for the life time of the plant. The nuclear response of the detectors is limited and a replacement program is required. Starting in refueling outage 13 (October 2009), two of the Seabrook Station thimbles were replaced at locations A09 and C08. The replacement thimbles incorporate replacement fixed incore detectors and thermocouple instrumentation. An Engineering Change was implemented for the installation of the new thimbles/fixed incore detectors. Replacement thimbles retain the double walled design; however, the inner calibration tube has been sealed (e.g. no moveable detector access is permitted). This means that with the new design, the thimble integrity for replacement detectors could be totally failed without resulting in a non-isolable leak of reactor coolant. In upcoming outages, plans are to continue to replace fixed incore detectors using this improved design until all have been changed.

The use of Inconel 600 alone does not form the basis for not having a Flux Thimble Tube Inspection Program. The fundamental design features of the incore system, the double concentric tubes, and the fact that all potential leak paths are sealed should a thimble breach occur forms the basis for not having a Flux Thimble Tube Inspection Program. Inconel is a more wear resistant material than stainless steel and its use provides additional margin for thimble wear.

Based on the above discussion, Seabrook Station flux thimble tube monitoring program to periodically monitor/measure flux thimble tube wall thinning is no longer required due to the unique Seabrook Station design features of the flux thimble tubes. The double-concentric tube design made of Inconel 600 and the fact that all potential leak paths are sealed should a thimble breach occur provides in depth protection against a potential non-isolable Reactor Coolant leak as described in NRC bulletin 88-09. The aging effects managed by NUREG-1801 Rev.1, XI.M37 do not apply to Seabrook Station, thus making the Aging Management Program unnecessary.

The above information is also documented in Seabrook Station Commitment Change Request CCR 2010-01.

Request for Additional Information (RAI) 3.1.1.60-02

Background:

LRA Table 3.1.2-3 includes an applicable AMR item to manage cracking in the flux thimble tubes that are fabricated from nickel alloy with the pressurized water reactor (PWR) Vessel Internals Program and Water Chemistry Program.

The applicant's PWR Vessel Internals Program is described in LRA Section B.2.1.7 and is based on the augmented and existing program recommendations in "Materials Reliability Program: Pressurized Water Reactor Internals Inspection and Evaluation Guidelines (MRP-227 Rev. 0)." The staff noted that MRP-227 Rev. 0 identifies Westinghouse-design flux thimble tubes as existing MRP-227 Rev. 0 methodology components and credits an applicant's existing Flux Thimble Tube Inspection Program to manage loss of material due to wear, only, in these components. The MRP-227 Rev. 0 methodology does not credit any augmented program inspections or existing program inspections to detect and manage cracking in Westinghouse design flux thimble tube components.

The staff noted that the applicant does not credit a Flux Thimble Tube Inspection Program for detection and management of aging related degradation in the flux thimble tubes.

Issue:

The applicant's proposal to use the PWR Vessel Internals Program to manage cracking in the flux thimble tubes may not be valid because: (1) the MRP-227 Rev. 0 does not include recommendations to manage potential fatigue-induced or stress corrosion-induced cracking in these type of components, and (2) the LRA does not include a Flux Thimble Tube Inspection Program to manage cracking or loss of material due to wear, as addressed in RAI 3.1.1.60-01 for the flux thimble tubes.

Request:

Justify using the PWR Vessel Internals Program to manage cracking in the flux thimble tubes, considering that MRP-227 Rev. 0 does not contain recommendations for managing cracking in Westinghouse-design flux thimble tubes.

NextEra Energy Seabrook Response:

The intended function of Seabrook's flux thimble tubes is to provide housing for the self powered fixed incore neutron detectors and the core exit thermocouples. Seabrook has a unique design in that the flux thimble tube is a double walled concentric tube design made of Inconel. The self powered fixed detectors and thermocouple are in between the

flux thimble tubes. The inner tube was previously used to perform flux mapping and the system has not been used since 1995.

A design change has placed the movable incore detectors in a laid up condition and is no longer used to perform flux mapping. Prior to the design change if the outer tube was to leak there would be no RCS boundary leakage to the containment. The leakage would only occur if both the inner and outer tube were breached. The design change has disconnected the movable detector path and has installed a qualified pressure retaining cap which will prevent any RCS leakage in the unlikely event of a double walled rupture of a flux thimble tube. The flux thimble tube no longer provides a function of pressure boundary hence, it has no license renewal intended function and it will be removed from scope. The flux thimble guide tubes remain in scope with the intended function of structural support.

Based on the above discussion, the following changes are made to the LRA.

1. On page 3.1-5, in Section 3.1.2.1.3, under the Environments, deleted the first two bullets as follows

   - ~~Air Indoor Uncontrolled~~
   - ~~Air with Borated Water Leakage~~

2. On page 3.1-86, line items 3, 4, 5, 6, and 7 are deleted from Table 3.1.2-3 as follows:

~~Flux Thimble Tubes~~	~~Pressure Boundary~~	~~Nickel Alloy~~	~~Air-Indoor Uncontrolled (Internal)~~	~~None~~	~~None~~	~~IV.E-1 (RP-03)~~	~~3.1.1-85~~	~~A~~
~~Flux Thimble Tubes~~	~~Pressure Boundary~~	~~Nickel Alloy~~	~~Air With Borated Water Leakage (Internal)~~	~~None~~	~~None~~	~~None~~	~~None~~	~~G, 1~~
~~Flux Thimble Tubes~~	~~Pressure Boundary~~	~~Nickel Alloy~~	~~Reactor Coolant~~	~~Cracking~~	~~PWR Vessel Internals~~ ~~Water Chemistry Program~~	~~IV.B2-12 (R-143)~~	~~3.1.1-30~~	~~C~~ ~~C~~
~~Flux Thimble Tubes~~	~~Pressure Boundary~~	~~Nickel Alloy~~	~~Reactor Coolant~~	~~Loss of Material~~	~~Water Chemistry Program~~	~~IV.B2-32 (RP-24)~~	~~3.1.1-83~~	~~A~~

~~Flux Thimble Tubes~~	~~Pressure Boundary~~	~~Nickel Alloy~~	~~Reactor Coolant~~	~~Cumulative Fatigue Damage~~	~~TLAA~~	~~IV.B2-31 (R-53)~~	~~3.1.1-5~~	~~A~~

3. On page 3.1-94, note 1 is revised as follows:

   ~~1~~ ***Not Used*** ~~NUREG-1801 does not include air with borated water leakage environment for nickel alloy components. Similar to V.F-13 for stainless steel, there are no aging effects for nickel alloy in air with borated water leakage. Additionally, the American Welding Society (AWS) "Welding Handbook," (Seventh Edition, Volume 4, 1982, Library of Congress) identifies that nickel chromium alloy materials that are alloyed with iron, molybdenum, tungsten, cobalt or copper in various combinations have improved corrosion resistance.~~

4. On page 3.1-41, in Table 3.1.1, line item 3.1.1-85 is revised as follows:

3.1.1-85	Nickel alloy piping, piping components, and piping elements exposed to air-indoor uncontrolled (external)	None	None	NA-No AEM or AMP	Consistent with NUREG-1801. Nickel Alloy components exposed to air-indoor uncontrolled (external) are contained in the Reactor Coolant system, Reactor Vessel, ~~Reactor Vessel Internals~~, and Steam Generator.

5. On page 2.3-22, the 9th row is deleted from in Table 2.3.1-3 as follows:

~~Flux Thimble Tubes~~	~~Pressure Boundary~~

<u>Request for Additional Information (RAI) 3.1.2.2.2.4-01</u>

Background:

SRP-LR Section 3.1.2.2.2, item 4, discusses loss of material due to general, pitting, and crevice corrosion in the steel PWR steam generator upper and lower shell and transition cone exposed to secondary feedwater and steam. If the steam generators are not Westinghouse Models 44 or 51, the GALL Report credits the Water Chemistry program to mitigate corrosion and the Inservice Inspection program to detect loss of material.

Seabrook Station has Model F steam generators and, in accordance with the Standard Review Plan of License Renewal Applications for Nuclear Power Plants (SRP-LR) and

the GALL Report, augmented inspections to detect pitting and crevice corrosion are not needed.

LRA Section 3.1.2.2.2, item 4, states that, in addition to the upper and lower shell and transition cone, other steam generator steel components (feedwater and main steam nozzles, secondary hand holes, secondary manways, and shell penetrations) are subject to loss of material due to general, pitting, and crevice corrosion, and that the aging effect will be managed by the ASME Section XI Inservice Inspection, Subsections IWB, IWC, and IWD Program to verify the effectiveness of the Water Chemistry Program.

Issue:
The staff noted that the circumferential welds that join the upper and lower shell to the transition cone are subject to volumetric examination in accordance with ASME Code Section XI Examination Criteria C-A, item C1.10.

Furthermore, volumetric examination in accordance with ASME Code Section XI is effective in detecting cracking and gross loss of material. However, visual examination normally is more effective in detecting early indications of corrosion, such as surface discoloration, and minor pitting, and would be more effective in confirming the effectiveness of the Water Chemistry Program with regard to a variety of different components.

Request:

1. Clarify what types of examinations will be used to verify effectiveness of the Water Chemistry Program to mitigate loss of material due to general, pitting and crevice corrosion for each of the components included in LRA Section 3.1.2.2.2, item 4.
2. If visual examinations are not included, provide a justification that volumetric examination, alone, is adequate to detect early indications of loss of material due to general, pitting, and crevice corrosion.

NextEra Energy Seabrook Response:

1. The Steam Generator Tube Integrity Program, B.2.1.10, includes visual inspections for degradation of the secondary handholes, secondary manways, shell penetrations, steam generator shell ID surface, transition cone ID surface, top head, and shell weld ID surfaces.
2. The design of the steam generators prevents internal access to the feedwater and main steam nozzles for visual inspection. Therefore, only volumetric examinations are performed on the feedwater and main steam nozzles. Volumetric examinations are effective in detecting cracking and loss of material.

Based on this discussion, the following changes were made to the Application:

1. In Item 3.1.2.2.2, item 4, on page 3.1-10, revised the 2nd paragraph as follows:

   Seabrook Station will implement the ASME Section XI Inservice Inspection, Subsections IWB, IWC, and IWD Program, B.2.1.1, ***and the Steam Generator Tube Integrity Program, B.2.1.10,*** to verify the effectiveness of the Water Chemistry Program, B.2.1.2, to manage loss of material due to general, pitting and crevice corrosion in steel steam generator components (Feedwater and Main Steam nozzles, lower shell, secondary handholes, secondary manways, shell penetrations, top head, transition cone, and upper shell) exposed to secondary feedwater/steam in the Steam Generator. Since Seabrook Station has Westinghouse Model F Steam Generators, no additional inspections are required. The ASME Section XI Inservice Inspection, Subsections IWB, IWC, and IWD, ***Steam Generator Tube Integrity,*** and Water Chemistry programs are described in Appendix B.

2. In Table 3.1.1, on page 3.1-23, revised item 3.1.1-16 as follows:

3.1.1-16	Steel steam generator upper and lower shell and transition cone exposed to secondary feedwater and steam	Loss of material due to general, pitting and crevice corrosion	Inservice Inspection (IWB, IWC, and IWD), and Water Chemistry and, for Westinghouse Model 44 and 51 S/G, if general and pitting corrosion of the shell is known to exist, additional inspection procedures are to be developed.	Yes, detection of aging effects is to be evaluated	Consistent with NUREG-1801. The ASME Section XI Inservice Inspection, Subsections IWB, IWC, and IWD Program, B.2.1.1, ***and the Steam Generator Tube Integrity Program, B.2.1.10,*** will be used to verify the effectiveness of the Water Chemistry Program, B.2.1.2, to manage loss of material due to general, pitting and crevice corrosion in the steel components in the Steam Generators (Feedwater and Main Steam nozzles, lower shell, secondary hand holes, secondary manways, shell penetrations, top head,-transition cone, and upper shell) exposed to secondary feedwater/steam. Seabrook Station has Westinghouse Model F Steam Generators. Therefore, additional inspection procedures are not required. See Subsection 3.1.2.2.2.4.

3. In Table 3.1.2-4, on page 3.1-100, revised the 3rd row as follows:

Steam Generator Lower Shell	Pressure Boundary	Steel	Secondary Feedwater/Steam (Internal)	Loss of Material	ASME Section XI Inservice Inspection Subsections IWB IWC and IWD Program ***Steam Generator Tube Integrity Program*** Water Chemistry Program	IV.D1-12 (R-34)	3.1.1-16	A ***E, 6*** A

4. In Table 3.1.2-4, on page 3.1-106, revised the 3rd row as follows:

Steam Generator Secondary Handholes	Pressure Boundary	Steel	Secondary Feedwater/Steam (Internal)	Loss of Material	***Steam Generator Tube Integrity*** ~~ASME Section XI Inservice Inspection Subsections IWB IWC and IWD~~ Program Water Chemistry Program	IV.D1-12 (R-34)	3.1.1-16	***E, 5~~C~~*** C

5. In Table 3.1.2-4, on page 3.1-106, revised the 5th row as follows:

Steam Generator Secondary Manways	Pressure Boundary	Steel	Secondary Feedwater/Steam (Internal)	Loss of Material	***Steam Generator Tube Integrity*** ~~ASME Section XI Inservice Inspection Subsections IWB IWC and IWD~~ Program Water Chemistry Program	IV.D1-12 (R-34)	3.1.1-16	***E,*** ~~5C~~ C

6. In Table 3.1.2-4, on page 3.1-107, revised the 1st row as follows:

Steam Generator Shell Penetrations	Pressure Boundary	Steel	Secondary Feedwater/Steam (Internal)	Loss of Material	***Steam Generator Tube Integrity*** ~~ASME Section XI Inservice Inspection Subsections IWB IWC and IWD~~ Program Water Chemistry Program	IV.D1-12 (R-34)	3.1.1-16	***E,*** ~~5C~~ C

7. In Table 3.1.2-4, on page 3.1-108, revised the 2nd row as follows:

Steam Generator Top Head	Pressure Boundary	Steel	Secondary Feedwater/Steam (Internal)	Loss of Material	***Steam Generator Tube Integrity*** ~~ASME Section XI Inservice Inspection Subsections IWB IWC and IWD~~ Program Water Chemistry Program	IV.D1-12 (R-34)	3.1.1-16	***E,*** ~~5C~~ C

8. In Table 3.1.2-4, on page 3.1-108, revised the 5th row as follows:

Steam Generator Transition Cone	Pressure Boundary	Steel	Secondary Feedwater/Steam (Internal)	Loss of Material	ASME Section XI Inservice Inspection Subsections IWB IWC and IWD Program ***Steam Generator Tube Integrity Program*** Water Chemistry Program	IV.D1-12 (R-34)	3.1.1-16	A ***E, 6*** A

9. In Table 3.1.2-4, on page 3.1-112, revised the 1st row as follows:

Steam Generator Upper Shell	Pressure Boundary	Steel	Secondary Feedwater/Steam (Internal)	Loss of Material	ASME Section XI Inservice Inspection Subsections IWB IWC and IWD Program ***Steam Generator Tube Integrity Program*** Water Chemistry Program	IV.D1-12 (R-34)	3.1.1-16	A ***E, 6*** A

10. On page 3.1-114, added new notes 5 and 6 to Table 3.1.2-4 as follows:

5 NUREG 1801 specifies the ASME Section XI Inservice Inspection Subsections IWB IWC and IWD Program, and the Water Chemistry Program for this material, environment, and aging effect but The Steam Generator Tube Integrity program is substituted for the ASME Section XI Inservice Inspection Subsections IWB IWC and IWD Program to manage this aging effect.

6 NUREG 1801 specifies the ASME Section XI Inservice Inspection Subsections IWB IWC and IWD Program, and the Water Chemistry Program for this material, environment, and aging effect but in addition, the Steam Generator Tube Integrity program is also added for managing this aging effect.

Request for Additional Information (RAI) 3.1.2.2.14-01

Background:

LRA Table 3.1.1, item 3.1.1-32 and LRA Section 3.1.2.2.14 states that the Steam Generator Tube Integrity Program will be used to manage the aging effect of wall thinning in the steel steam generator steel feedwater inlet ring and supports. LRA Section B.2.1.10 states that the Steam Generator Tube Integrity Program will manage the aging

effect of wall thinning, but it does not describe what techniques would be used to manage this aging effect.

Issue:

GALL AMP XI.M17, Flow-Accelerated Corrosion, which is credited with managing wall thinning due to flow accelerated corrosion for many steel components, includes analysis, inspection, and verification to ensure that flow accelerated corrosion is not occurring at an unacceptable rate and that components are repaired or replaced before wall thinning becomes unacceptable. However, it is not clear to the staff whether the applicant's Steam Generator Tube Integrity Program uses both analysis and inspection to verify that unacceptable wall thinning is not occurring.

Request:

1. Describe the analytical methodology and inspection technique used to manage wall thinning in the steel steam generator feedwater inlet ring and supports.
2. Justify that the analytical methodology, together with verification by inspection, are adequate to ensure that loss of component intended function does not occur during the period of extended operation.
3. Alternatively, if inspection alone is credited to manage the aging effect, justify that the inspection and its associated acceptance criteria are adequate to ensure that the need for corrective action is identified in a timely manner, so that corrective actions are taken before loss of component intended function occurs.

NextEra Energy Seabrook Response:

1) The Steam Generator Tube Integrity Program uses visual inspections of the steam generators' secondary-side internals and it does not include predictive analytical methodology for wall thinning due to flow accelerated corrosion. The steam generator feedwater inlet ring and supports are included in this secondary side inspection program.

2) The Steam Generator Tube Integrity Program does not use analytical methodologies as part of the aging management of the steam generator feedwater inlet rings and supports. Visual inspections identify the general condition of the applicable steam generator components and inspect for evidence of erosion-corrosion, irregular geometry, and structural changes. The acceptance criteria require that there be no visible signs of degradation.

3) Seabrook Station performs a degradation assessment of the steam generators during each refueling outage when the steam generator tubes are inspected in accordance with NEI 97-06, "Steam Generator Program Guidelines," and EPRI guidelines. This

assessment confirms that acceptance criteria are met for the steam generators to return to service and operate until the next scheduled inspection. The degradation assessment ensures that degradation of components is identified and corrective actions are taken before loss of component intended function occurs.

Visual inspections required for the degradation assessment and associated acceptance criteria for the inspections are determined by a steam generator degradation assessment, which evaluates internal and external operating experience, industry guidance, design features, and materials of construction. These inspections identify the general condition of the applicable steam generator components and inspect for evidence of erosion-corrosion, irregular geometry, and structural changes. The acceptance criteria require that there be no visible signs of degradation.

The typical steam generator degradation assessment for Seabrook Station feedwater ring includes OD surface, supports, welds, cross-over pipe, feedwater nozzle knuckle region, feedwater ring to J-nozzle intersection on the OD, J-nozzle to feed-ring joint on the ID [remote video inspection] and feedwater ring weld backing rings [remote video inspection], and all welds.

Request for Additional Information (RAI) 3.2.2.3-01

Background:

The GALL Report does not specifically address an AMR line item for stainless steel heat exchanger components in the engineered safety features exposed to treated borated water greater than 60°C (140 OF) and subject to cracking due to SCC. However, GALL Report item VII.E1-5 addresses stainless steel heat exchanger components exposed to treated borated water greater than 60°C (140 OF) in the chemical and volume control system of the auxiliary systems and recommends the Water Chemistry Program and a plant-specific program that verifies the effectiveness of the Water Chemistry Program by confirming the absence of cracking due to SCC.

LRA Table 3.2.2-3 indicates that cracking is an aging effect applicable for stainless steel heat exchanger components exposed to treated borated water (internal) greater than 60°C (140 OF), specifically the 1-RH-E-188A and 188B and the 1-RH-E-9A and 9B components. For these components, the applicant referenced LRA Table 3.2.1, line item 3.2.1-48, which indicates cracking due to SCC is managed by the applicant's Water Chemistry Program.

Issue:

The GALL Report typically recommends a plant-specific program to verify the absence of cracking due to SCC in heat exchanger components and to verify the effectiveness of

the Water Chemistry Program as described in GALL Report item VII. E1-5. The staff found a need to further clarify why the Water Chemistry Program alone is adequate to manage the aging effect in the heat exchanger components.

Request:

Justify why the Water Chemistry Program alone is adequate to manage cracking due to SCC in these heat exchanger components exposed to treated borated water greater than 60°C (140 OF). As part of the justification, evaluate the operating experience to clarify whether it supports the aging management review results. Otherwise, in lieu of a justification, provide a plant-specific program that will verify the absence of cracking due to SCC in the components and verify the effectiveness of the Water Chemistry Program.

NextEra Energy Seabrook Response:

The One-Time Inspection Program will be assigned to verify the effectiveness of the Water Chemistry Program for the RH heat exchanger components and these components will be aligned to GALL Line item VII.E1-5. Therefore, the following changes are made to the LRA as follows:

1. In Table 3.2.1, on page 3.2-28, line item 3.2.1-48 is revised as follows:

3.2.1-48	Stainless steel or stainless-steel-clad steel piping, piping components, piping elements, and tanks (including safety injection tanks/accumulators) exposed to treated borated water >60°C (>140°F)	Cracking due to stress corrosion cracking	Water Chemistry	No	Components in the Reactor Coolant system have been aligned to this line item based on material, environment, and aging effect. Consistent with NUREG-1801. The Water Chemistry Program, B.2.1.2, will be used to manage cracking due to stress corrosion cracking in stainless steel piping components exposed to treated borated water >140°F in the Reactor Coolant and Residual Heat Removal systems~~, and stainless steel heat exchanger components exposed to treated borated water >140°F in the Residual Heat Removal system~~.

2. In Table 3.2.2-3, on page 3.2-60, the 6th row is revised as follows:

Heat Exchanger Components (1-RH-E-9A and 9B Channel Head)	Pressure Boundary	Stainless Steel	Treated Borated Water >140° F (Internal)	Cracking	***One-Time Inspection Program*** Water Chemistry Program	***VII.E1-5 (A-84)~~V.D1-31 (E-12)~~***	***3.3.1-~~83.2.1-48~~***	***E, 3~~C~~***

3. In Table 3.2.2-3, on page 3.2-61, the 4th row is revised as follows:

Heat Exchanger Components (1-RH-E-9A and 9B Tubes)	Heat Transfer Pressure Boundary	Stainless Steel	Treated Borated Water >140° F (Internal)	Cracking	***One-Time Inspection Program*** Water Chemistry Program	***VII.E1-5 (A-84~~V.D1-31 (E-12)~~***	***3.3.1-~~83.2.1-48~~***	***E, 3~~C~~***

4. In Table 3.2.2-3, on page 3.2-62, the 1st row is revised as follows:

Heat Exchanger Components (1-RH-E-9A and 9B Tube Sheet)	Pressure Boundary	Stainless Steel	Treated Borated Water >140° F (Internal)	Cracking	***One-Time Inspection Program*** Water Chemistry Program	***VII.E1-5 (A-84~~V.D1-31 (E-12)~~***	***3.3.1-~~83.2.1-48~~***	***E, 3~~C~~***

5. In Table 3.2.2-3, on page 3.2-63, the 1st row is revised as follows:

Heat Exchanger Components (1-RH-E-188A and 188B Tubes)	Heat Transfer Pressure Boundary	Stainless Steel	Treated Borated Water >140° F (Internal)	Cracking	***One-Time Inspection Program*** Water Chemistry Program	***VII.E1-5 (A-84~~V.D1-31~~ ~~(E-12)~~***	***3.3.1-~~83.2.1-48~~***	***E, 3~~C~~***

6. In Table 3.2.2-3, on page 3.2-71, note 3 is added as follows:

3 NUREG-1801 specifies the Water Chemistry and a plant-specific program for this line item. The Water Chemistry and One-Time Inspection Programs are used to manage the aging effect(s) applicable to this component type, material, and environment combination.

7. In Section 3.3.2.2.4.2, on page 3.3-69, the following new paragraph is added after the 1st paragraph as follows:

Seabrook will implement the One-Time Inspection Program, B.1.2.20 and the Water Chemistry Program, B.2.1.2 to manage cracking due to stress corrosion cracking of the stainless steel heat exchanger components exposed to treated borated water greater than 60°C (>140°F) in the Residual Heat Removal System. The One-Time Inspection Program and Water Chemistry Program are discussed in Appendix B.

8. In Table 3.3.1, on page 3.3-87, line item 3.3.1-8 is revised as follows:

3.3.1-8	Stainless steel regenerative heat exchanger components exposed to treated borated water >60°C (>140°F)	Cracking due to stress corrosion cracking and cyclic loading	Water Chemistry and a plant specific verification program. The AMP is to be augmented by verifying the absence of cracking due to stress corrosion cracking and cyclic loading. A plant specific aging management program is to be evaluated.	Yes, plant specific	***Heat exchanger components in the Residual Heat Removal System have been aligned to this line item due to material, environment, and aging effect.*** ***The One Time Inspection Program, B.1.2.20 and the Water Chemistry Program, B.2.1.2 will be used to manage cracking due to stress corrosion cracking of the stainless steel heat exchanger components exposed to treated borated water greater than 60°C (>140°F) in the Residual Heat Removal System.*** The Water Chemistry Program, B.2.1.2 will be used to manage cracking due to stress corrosion cracking and cyclic loading of the stainless steel regenerative heat exchanger components exposed to treated borated water 60°C (>140°F) in the Chemical and Volume Control System. The regenerative heat exchanger is of a welded design that prevents heat exchanger disassembly for access to the heat exchanger internals. The Water Chemistry program effectiveness will be verified by the one-time inspection of another non-regenerative heat exchanger in the Chemical and Volume Control System with stainless steel components with the same the same environment to assure this aging effect is not occurring. In addition, the integrity of the regenerative heat exchanger is verified by continuous temperature monitoring. See subsection 3.3.2.2.4.2.

Request for Additional Information (RAI) 3.3.2.15-01

Background:

The GALL Report does not specifically address an AMR line item for stainless steel heat exchanger components exposed to steam subject to cracking due to SCC, For heat exchanger components in other environments, the GALL Report typically recommends the Water Chemistry Program in conjunction with a plant-specific program that verifies the absence of cracking. For example, GALL item VII.E1-5 recommends the Water Chemistry Program with a plant-specific program to verify the effectiveness of the Water Chemistry Program by confirming the absence of cracking due to SCC in stainless steel heat exchanger components, which are exposed to treated borated water greater than 50°C, in the chemical and volume control system of the auxiliary systems.

LRA Tables 3.3.2-15 and 3.4.2-5 indicate that cracking is an aging effect applicable for stainless steel heat exchanger components (FP-E-46 & 47 and 1-CO-E-111 components) exposed to steam. For these components, the applicant referenced LRA Table 3.4.1, line item 3.4.1-39, which indicates cracking due to SCC is managed by the Water Chemistry Program.

Issue:

The GALL Report typically recommends a plant-specific program to verify the absence of cracking due to SCC for the aging management of heat exchanger components as described in GALL Report item VII.E1-5. The staff found a need to further clarify why the Water Chemistry Program alone is adequate to manage the aging effect in the heat exchanger components.

Request:

Justify why the Water Chemistry Program alone is adequate to manage cracking due to SCC in these heat exchanger components exposed to steam. As part of the justification, evaluate the operating experience to clarify whether it supports the applicant's AMR results. Otherwise, in lieu of a justification, provide a plant-specific program that will verify the absence of cracking due to SCC in the components and verify the effectiveness of the Water Chemistry Program.

NextEra Energy Seabrook Response:

The steam environment listed in Table 3.3.2-15 for FP-E-46 and FP-E-47 is potable water converted to steam, which is not the same steam environment listed in line item 3.4.1-39. The shell side steam environment for these two heat exchangers comes from the

Auxiliary Steam Heating System which uses potable water. The steam environment listed in line item 3.4.1-39 is subject to the PWR secondary plant water chemistry program. Potable water converted to steam is not subject to the Water Chemistry Program and therefore, the Inspection of Internal Surfaces in Miscellaneous Piping and Ducting Components Program is a more appropriate program for age managing these heat exchangers. As part of the response to this RAI, the other heat exchanger components for these two heat exchangers, which were inadvertently assigned to the Water Chemistry Program, are being reassigned to the Inspection of Internal Surfaces in Miscellaneous Piping and Ducting Components Program.

Seabrook Station has preventive maintenance activities already in place to clean and inspect the external surfaces of the heat exchanger tubes for FP-E-46 and FP-E-47. The frequency of these maintenance activities is approximately every 4 years. These inspections will indicate if cracking is occurring on the external surfaces of the heat exchanger tubes. Any evidence of cracking will be documented and evaluated under the corrective action program.

The external steam environment for the heat exchanger tubes in CO-E-111 is steam supplied from the Main Steam system, which is subject to the Water Chemistry Program. Therefore, the selection of the Water Chemistry Program as the aging management program is appropriate. In addition to the Water Chemistry Program, the heat exchanger tubes for CO-E-111 will be inspected under the One-Time Inspection Program to verify that cracking is not occurring. Any evidence of cracking will be documented and evaluated under the corrective action program.

Based on the above discussion, the following changes are made to the Seabrook Application:

1. In Table 3.3.2-15, on page 3.3-304, the 4th row is revised as follows:

Heat Exchanger Components (FP-E-46 & 47 Shell)	Pressure Boundary	Steel	Steam (Internal)	Loss of Material	***Inspection of Internal Surfaces in Miscellaneous Piping and Ducting Components*** ~~Water Chemistry Program~~ ~~One-Time Inspection Program~~	***None***~~VII I.C-4 (S-06)~~	***None***~~3.4.1-2~~	***G,*** ~~8C~~

2. In Table 3.3.2-15, on page 3.3-304, the 5th row is revised as follows:

Heat Exchanger Components (FP-E-46 & 47 Tubes)	Heat Transfer Pressure Boundary	Stainless Steel	Steam (External)	Cracking	***Inspection of Internal Surfaces in Miscellaneous Piping and Ducting Components*** ~~Water Chemistry~~ Program	***None***~~VII I.A-10 (SP-44)~~	***None***~~3.4. 1-39~~	***G 8***~~C~~

3. In Table 3.3.2-15, on page 3.3-304, the 6th row is revised as follows:

Heat Exchanger Components (FP-E-46 & 47 Tubes)	Heat Transfer Pressure Boundary	Stainless Steel	Steam (External)	Loss of Material	***Inspection of Internal Surfaces in Miscellaneous Piping and Ducting Components*** ~~Water Chemistry~~ Program	***None***~~VII I.A-12 (SP-43)~~	***None***~~3.4. 1-37~~	***G, 8***~~C~~

4. In Table 3.3.2-15, on page 3.3-305 the 2nd row is revised as follows:

Heat Exchanger Components (FP-E-46 & 47 Tubesheet)	Pressure Boundary	Stainless Steel	Steam (External)	Cracking	***Inspection of Internal Surfaces in Miscellaneous Piping and Ducting Components*** ~~Water Chemistry~~ Program	***None***~~VII I.A-10 (SP-44)~~	***None***~~3.4. 1-39~~	***G, 8***~~C~~

5. In Table 3.3.2-15, on page 3.3-305, the 3rd row is revised as follows:

Heat Exchanger Components (FP-E-46 & 47 Tubesheet)	Pressure Boundary	Stainless Steel	Steam (External)	Loss of Material	***Inspection of Internal Surfaces in Miscellaneous Piping and Ducting Components*** ~~Water Chemistry~~ Program	***None***~~VII I.A-12 (SP-43)~~	***None***~~3.4. 1-37~~	***G, 8***~~C~~

6. In Table 3.3.2-15, on page 3.3-317, note 8 is added as follows (Please note that Notes 6 and 7 were previously added under Supplement 2 dated November 15, 2010, Enclosure 2, Item 21, page 16 of 24):

   8 Aging effect not in NUREG-1801 for this component, material, and environment combination. The steam environment is potable water (raw water) converted to steam. The Inspection of Internal Surfaces in Miscellaneous Piping and Ducting Components Program will be used to manage the aging effect of loss of material and cracking for this material and environment combination.

7. In Section 3.4.2.2.2.1, on page 3.4-13, the 1st partial paragraph is revised as follows:

   corrosion in steel heat exchanger components exposed to steam in the Chemical and Volume Control~~,~~ and Hot Water Heating~~, and Fire Protection~~ systems. The Water Chemistry and One-Time Inspection Programs are described in Appendix B.

8. In Table 3.4-1, on page 3.4-21, line item 3.4.1-2 is revised as follows:

3.4.1-2	Steel piping, piping components, and piping elements exposed to steam	Loss of material due to general, pitting and crevice corrosion	Water Chemistry and One-Time Inspection	Yes, detection of aging effects is to be evaluated	Components in the Boron Recovery, Chemical and Volume Control, Containment Building Spray, ~~Fire Protection,~~ Hot Water, Nitrogen Gas, and Waste Processing Liquid systems have been aligned with this line item based on material, environment, and aging effect. Consistent with NUREG-1801. The One-Time Inspection Program, B.2.1.20, will be used to verify the effectiveness of the Water Chemistry Program, B.2.1.2, to manage loss of material due to general, pitting, and crevice corrosion in steel piping components and steel heat exchanger components exposed to steam. a) Steel piping components are contained in the Auxiliary Steam, Boron Recovery, Containment Building Spray, , Hot Water, Nitrogen Gas, and Waste Processing Liquid systems. a) Steel heat exchanger components are contained in the Chemical and Volume Control~~, Fire Protection,~~ and Hot Water Heating system~~s~~. See Subsection 3.4.2.2.2.1.

9. In Table 3.4.1, on page 3.4-33, line item 3.4.1-37 is revised as follows:

3.4.1-37	Steel, stainless steel, and nickel-based alloy piping, piping components, and piping elements exposed to steam	Loss of material due to pitting and crevice corrosion	Water Chemistry	No	Components in the Steam Generator ~~and Fire Protection~~ systems have been aligned to this line item due to material, environment, and aging effect. Consistent with NUREG-1801. The Water Chemistry Program, B.2.1.2, will be used to manage loss of material due to pitting and crevice corrosion in stainless steel piping components exposed to steam in the Auxiliary Steam, Feedwater, , Main Steam, and Steam Generator systems. Consistent with NUREG-1801. The Water Chemistry Program, B.2.1.2, will be used to manage loss of material due to pitting and crevice corrosion in stainless steel heat exchanger components exposed to steam in the Condensate ~~and Fire Protection~~ systems. Consistent with NUREG-1801. The Water Chemistry

10. In Table 3.4.1, on page 3.4-35, line item 3.4.1-39 is revised as follows:

3.4.1-39	Stainless steel piping, piping components, and piping elements exposed to steam	Cracking due to stress corrosion cracking	Water Chemistry	No	~~Components in the Fire Protection system have been aligned to this line item based on material, environment, and aging effect.~~ Consistent with NUREG-1801. The Water Chemistry Program, B.2.1.2, will be used to manage cracking due to stress corrosion cracking in stainless steel piping components exposed to steam in the Auxiliary Steam, Feedwater, Main Steam systems~~, and stainless steel heat exchanger components exposed to steam in the Condensate and Fire Protection systems~~. Consistent with NUREG-1801 for material, environment and aging effect, but a different aging management program is credited. The steam environment is potable water heated into steam. Therefore, the Water Chemistry Program is not applicable. The Inspection of Internal Surfaces in Miscellaneous Piping and Ducting Components Program (with exceptions), B.2.1.25, will be used to manage loss of material due to cracking in stainless steel piping components & stainless steel heat exchanger components exposed to steam environment in the Auxiliary Steam Heating system.

11. In Table 3.4.2-5, on page 3.2-71, the 4th row is revised as follows:

Heat Exchanger Components (1-CO-E-111 Tubes)	Pressure Boundary	Stainless Steel	Steam (External)	Cracking	Water Chemistry Program ***One-Time Inspection Program***	***None***~~VII I.A-10 (SP-44)~~	***None***~~3.4.1-39~~	***H, 3***~~C~~

12. In Table 3.4.2-5, on page 3.4-76, note 3 is added as follows: (Please note that Note 2 was previously added under Supplement 2 dated November 15, 2010, Enclosure 2, Item 23, page 22 of 24)

    3 The aging effect is not in NUREG-1801 for this component type, material, and environment combination. Water Chemistry and One-Time Inspection Programs are used to manage the aging effect(s) applicable to this component type, material, and environment combination.

Request for Additional Information (RAI) 3.4.2.3-01

Background:

GALL Report, Volume 1, Table 4, item 39 recommends that stainless steel piping, piping components, and piping elements exposed to steam be managed for cracking due to SCC by the Water Chemistry Program. LRA Table 3.4.2-3 states that stainless steel filter elements, heat exchanger components, and valve bodies exposed to steam are managed by the Inspection of Internal Surfaces in Miscellaneous Piping and Ducting Components Program for SCC. These LRA AMR items also cite generic Note E and refer to LRA item 3.4.1-39. LRA Section B.2.1.25 describes that the program uses inspections of opportunity and that the inspection techniques utilized to detect this aging effect of the components will be either visual inspection with a magnified resolution as described in 10 CFR 50.55a (b)(2)(xxi)(A) or an ultrasonic inspection method.

Issue:

The applicant's program proposes to manage the aging effect in steam and includes inspections of opportunity but does not include water chemistry control. In view of the lack of water chemistry control, the staff found a need to further clarify why the inspections of opportunity are adequate to manage the cracking due to SCC in the components exposed to a steam environment with no chemistry control.

Request:

Clarify why the Inspection of Internal Surfaces in Miscellaneous Piping and Ducting Component Program, which relies on inspections of opportunity without water chemistry control, is adequate to detect and manage cracking due to SCC in the stainless steel components exposed to steam. As part of the justification, provide information on how the frequency of the inspections will be adequate to manage the aging effect.

NextEra Energy Seabrook Response:

Table 3.4.2-3 provides the summary of aging management evaluations for the Auxiliary Steam Heating system. As discussed in Section 2.3.4.3 of the LRA, the Auxiliary Steam Heating System provides low pressure saturated steam to various plant equipment/buildings for heating purposes.

The make-up water to the systems is potable water obtained from the town of Seabrook. The steam environment listed in Table 3.4.2-3 for the Auxiliary Steam Heating system components is potable water converted to steam, which is not the same steam environment listed in line items 3.4.1-37 and 3.4.1-39. PWR secondary plant water chemistry program is not applicable to potable water. Therefore, the Inspection of Internal Surfaces in Miscellaneous Piping and Ducting Components Program is a more appropriate program for age managing these components. However, Seabrook Station will provide for a one-time inspection of the stainless steel components in the Auxiliary Steam Heating System to verify that cracking is not occurring. Any evidence of cracking will be documented and evaluated under the corrective action program.

Based on the above discussion, the following revisions have been made to the LRA:

1. In section 3.4.2.1.3, on page 3.4-5, add the following program to the list of aging management programs listed under Aging Management Programs.

    - ***One Time Inspection Program (B.2.1.20)***

2. In Table 3.4.2-3, on page 3.4-57, the 4th row is revised as follows:

Filter Element	Filter	Stainless Steel	Steam (Internal/ external)	Cracking	Inspection of Internal Surfaces in Miscellaneous Piping and Ducting Components Program ***One-Time Inspection Program***	***NONE*** ~~***VIII.B1-2 (SP-44)***~~	***NONE*** ~~***3.4.1-39***~~	***G, 6*** ~~***E, 1***~~

3. In Table 3.4.2-3, on page 3.4-58, the last row is revised as follows:

Heat Exchanger Components (Unit Heater 1-ASH-UH-197 and 198 Heating Coil)	Leakage Boundary	Stainless Steel	Steam (Internal)	Cracking	Inspection of Internal Surfaces in Miscellaneous Piping and Ducting Components Program ***One-Time Inspection Program***	***NONE*** ~~***VIII.B1-2 (SP-44)***~~	***NONE*** ~~***3.4.1-39***~~	***G, 6*** ~~***E, 1***~~

4. In Table 3.4.2-3, on page 3.4-59, the 3rd row is revised as follows:

Heat Exchanger Components (Unit Heater 1-ASH-UH-73, 74, 75, 110 and 111 Heating Coil)	Heat Transfer Pressure Boundary	Stainless Steel	Steam (Internal)	Cracking	Inspection of Internal Surfaces in Miscellaneous Piping and Ducting Components Program ***One-Time Inspection Program***	***None*** ~~***VIII.B1-2 (SP-44)***~~	***None*** ~~***3.4.1-39***~~	***G, 6*** ~~***E, 1***~~

5. In Table 3.4.2-3, on page 3.4-63, the 7th row is revised as follows:

Valve Body	Leakage Boundary (Spatial)	Stainless Steel	Steam (Internal)	Cracking	Inspection of Internal Surfaces in Miscellaneous Piping and Ducting Components Program ***One-Time Inspection Program***	***None*** ~~***VIII.B1-2 (SP-44)***~~	***None*** ~~***3.4.1-39***~~	***G, 6*** ~~***E-1***~~

6. In Table 3.4.2-3, on page 3.4-66, the following plant specific note is added as follows:

6 Aging effect not in NUREG-1801 for this component, material, and environment combination. The steam environment is potable water (raw water) converted to steam. Seabrook Station has selected the Inspection of

Internal surfaces in Miscellaneous Piping and Ducting Components Program and the One-Time Inspection Program to manage the aging effect.

7. In Table 3.4.1, on page 3.4-35, line item 3.4.1-39, is revised as follows:

3.4.1-39	Stainless steel piping, piping components, and piping elements exposed to steam	Cracking due to stress corrosion cracking	Water Chemistry	No	Components in the Fire Protection system have been aligned to this line item based on material, environment, and aging effect. Consistent with NUREG-1801. The Water Chemistry Program, B.2.1.2, will be used to manage cracking due to stress corrosion cracking in stainless steel piping components exposed to steam in the Auxiliary Steam, Feedwater, and Main Steam systems, and stainless steel heat exchanger components exposed to steam in the Condensate and Fire Protection systems. ~~Consistent with NUREG-1801 for material, environment and aging effect, but a different aging management program is credited. The steam environment is potable water heated into steam. Therefore, the Water Chemistry Program is not applicable. The Inspection of Internal Surfaces in Miscellaneous Piping and Ducting Components Program (with exceptions), B.2.1.25, will be used to manage loss of material due to cracking in stainless steel piping components & stainless steel heat exchanger components exposed to steam environment in the Auxiliary Steam Heating system.~~

8. In Appendix B, in Section B.2.1.20, on page B-118, in the first full paragraph, add a 4th bullet as follows.

   - ***Verification of stainless steel components in the Auxiliary Steam Heating System, to manage the effects of cracking in a steam environment.***

Request for Additional Information (RAI) 3.1.2.1-01

Background:

GALL Report item IV.C2-3 recommends the Water Chemistry Program to manage the cracking due to SCC of cast austenitic stainless steel (CASS) Class 1 piping, piping components and piping elements exposed to reactor coolant. The GALL Report item further recommends a plant-specific program for CASS Class 1 components, which have carbon content greater than 0.035% or ferrite content less than 7.5%, based on the material susceptibility criteria described in NUREG-0313, Rev. 2. The GALL Report recommends that the plant-specific program include adequate inspection methods to ensure .detection of cracks and flaw evaluation methodology for CASS component susceptible to thermal aging embrittlement. The staff noted the recommendation of GALL item IV.C2-3 may be applicable for the CASS components depending on the Code Class of the components.

LRA Table 3.1.2-1, LRA Table 3.2,2-3 and LRA Table 3,3.2-3 address CASS "Valve Body" items, which are exposed to treated borated water > 140 ^{0}F and are subject to cracking. The applicant indicated that the AMR line items in LRA Tables 3.1.2-1 and 3.2.2-3 reference line item 3.2.1-48, and the AMR line item in LRA Table 3.3.2-3 references line item 3.3.1-90, which state that cracking due to SCC is managed by the Water Chemistry Program.

Issue:

The staff needs to clarify whether any of these CASS valves is a Class 1 component, for which the GALL Report recommends a plant-specific program in addition to the Water Chemistry Program to manage the cracking due to SCC based on the material susceptibility criteria described in NUREG-0313, Rev. 2.

Request:

1. Clarify whether any of the CASS valves in the reactor coolant system, residual heat removal system and chemical and volume control system is a Class 1 component for which the GALL Report recommends a plant-specific program in addition to the Water Chemistry Program, to manage SCC based on the material susceptibility criteria described in NUREG-0313, Rev. 2.

2. If any of these CASS valves is a Class 1 component that has carbon content greater than 0.035% or ferrite content less than 7.5%, justify why the Water Chemistry Program alone, without a plant-specific program, is adequate to manage the cracking due to SCC for the CASS Class 1 component.

NextEra Energy Seabrook Response:

1. Seabrook Station reviewed the valves associated with the line items for CASS "Valve Body" in the environment of treated borated water >140 °F with the potential aging effect of cracking for the Reactor Coolant system (Table 3.1.2-1), Residual Heat Removal system (Table 3.2.2-3), and the Chemical and Volume Control system (Table 3.3.2-3) and confirmed that none of the valves are Class 1. Therefore, no plant specific program is required in addition to the Water Chemistry Program to manage stress corrosion cracking based on the material susceptibility criteria described in NUREG-0313, Rev.2. Please note that the Class 1 components have their own line items in the summary of aging management evaluation tables and are designated with a "(Class1)" after the component type. There are no Class1 CASS valves in the three systems questioned in this RAI.
2. None of the valves are Class 1.

Request for Additional Information (RAI) B.2.1.31-5

Background:

The staff has determined that structures in the scope of the Structures Monitoring Program should be monitored at an interval not to exceed five years. Some structures of lower safety significance, and subject to benign environmental conditions, may be monitored at an interval exceeding five years; however, these structures should be listed along with the environment they are exposed to and a summary of past degradation.

Issue:

In Appendix B of the LRA, the applicant states that structures in a harsh environment are inspected on a five year basis and all others are inspected on a ten year basis. The applicant explains that a harsh environment is one that is routinely subject to outside ambient conditions, very high temperatures, frequent exposure to caustic materials, or extremely high radiation levels. However, the applicant did not provide a list of the structures that would be inspected on a ten year frequency, or a justification for the longer period.

Request:

Identify the structures that will be inspected on a ten year frequency along with their environments and a summary of past degradation.

NextEra Energy Seabrook Response:

Engineering Department Standard, "Structural Monitoring Program" (the implementing procedure for the Seabrook Station XI.S6 program), categorizes the environments as follows:

Harsh – an area routinely subjected to outside ambient conditions, high moisture or humidity, very high ambient temperatures or frequent large cycling of temperatures (including freezing/thawing), frequent exposure to caustic materials, or extremely high radiation levels.

Mild – an area that is not harsh.

Structures in a Harsh environment are inspected at a five year frequency; structures in a Mild environment are inspected at a ten year frequency.

The following table shows the ACI 349.3R evaluation frequency with the corresponding Seabrook Station license renewal in-scope structures and environments:

STRUCTURE CATEGORY PER ACI-349.3R	FREQUENCY OF VISUAL INSPECTION	STRUCTURES IN-SCOPE OF LICENSE RENEWAL	ENVIRONMENT
a) Below-grade structures	5 years	All in-scope structures, interior and exterior, below grade	Harsh
b) Structures exposed to natural environment (direct/indirect)	5 years	All in-scope structures, exterior above grade	Harsh
c) Structures inside primary containment	5 years	All in category	Harsh
d) Continuous fluid-exposed structures	5 years	Service Water Pumphouse Circulating Water Pumphouse Intake Transition Structure Discharge Transition Structure	Harsh

		Service Water Cooling Tower Revetment	
e) Structures retaining fluid and pressure**	NA**	None**	NA**
f) Controlled interior environment	10 years	Interior, above grade portions of: Containment Enclosure Ventilation Area; Control Building; Diesel Generator Building; Waste Process Building and Tank Farm*; Emergency Feedwater Pumphouse Building including Pre-Action Valve Building; Fuel Storage Building; Primary Auxiliary Building*; Turbine Generator Building; Fire Pumphouse; Steam Generator Blowdown Recovery Building; Non Essential Switchgear Building	Mild
g) Seabrook plant specific locations*	5 years	Designated Areas of Tank Farm and Primary Auxiliary Building	Harsh

*Selected Harsh Environment areas within Seabrook buildings otherwise designated as Mild Environment.

**Seabrook Station has no pressurized, fluid retaining structures that are included in the scope of the Structural Monitoring Program.

A summary of past degradation highlights is provided in LRA Section B.2.3.31, XI.S6 Structures Monitoring Program.

Request for Additional Information (RAI) 3.5.2.2.1.2-1

Background:

SRP-LR Sections 3.5.2.2.1.2, 3.5.2.2.2.1, and 3.5.2.2.2.2 address cracks and distortion due to increased levels from settlement. The SRP states that further evaluation is

necessary if a dewatering system is relied upon, or the aging effect is not within the scope of the applicant's Structures Monitoring Program.

Issue:

In the corresponding sections of the LRA the applicant states that structures are founded on sound bedrock, fill concrete or engineered backfill and do not have any potential areas of settlement. However, the applicant does not state that the Structures Monitoring Program will continue to inspect for degradation due to settlement. In addition, although the applicant does not use a dewatering system to control settlement, a dewatering system is used in an attempt to control groundwater leakage. The applicant did not discuss the effects, if any, of this dewatering on settlement.

Request:

1. Provide historic settlement results which demonstrate that degradation due to settlement does not need to be included within the scope of the Structures Monitoring Program.

2. Discuss what effects dewatering has had on settlement and if any programs have been put in place to ensure that future dewatering does not lead to additional settlement.

NextEra Energy Seabrook Response:

1. Historically, Seabrook Station has seen no indications of building settlement such as cracking or warping of structures or structural elements. As noted in LRA Sections 3.5.2.2.1.2, 3.5.2.2.2.1, and 3.5.2.2.2.2, Seabrook Station Seismic Category I structures are founded on sound bedrock, fill concrete or consolidated backfill and do not have any potential areas of settlement or displacement.

   Nevertheless, the Structures Monitoring Program implementing procedure includes direction for examination for the effects of settlement.

   In an isolated situation in the Fuel Storage Building, there have been problems with deck plate seating alignment. A project is in progress to install laser targets, establish a baseline, and monitor alignments.

2. Seabrook Station does employ a dewatering system to assist in controlling groundwater inleakage to below grade structures. As noted above, all Seismic Category I structures are founded on solid, non-compressible material. Based on this design condition, settlement of structures is not anticipated. However, also as noted in 1. above, the implementing procedure for the Structures Monitoring Program does, conservatively, address examination for settlement.

Request for Additional Information (RAI) 3.5.2.2.1.4-1

Background:

SRP-LR Section 3.5.2.2.1.4 addresses steel elements of accessible and inaccessible areas of containments which are managed for loss of material due to general, pitting, and crevice corrosion by the ASME Section XI, Subsection IWE and 10 CFR Part 50, Appendix J Programs. The GALL Report, item II.A1-11, states that for inaccessible areas (embedded steel shell or liner) loss of material due to corrosion is not significant if the following four conditions are satisfied: (1) concrete meeting the specifications of ACI 318 or 349 and the guidance of ACI 201.2R was used for the containment concrete in contact with the embedded containment shell or liner; (2) the concrete is monitored to ensure that it is free of penetrating cracks that provide a path for water seepage to the surface of the containment shell or liner; (3) the moisture barrier, at the junction where the shell or liner becomes embedded, is subject to aging management activities in accordance with ASME Section XI, Subsection IWE requirements; and (4) water ponding on the containment concrete floor is not common and when detected is cleaned up in a timely manner.

Issue:

The LRA does not address item (4) above and does not discuss any plant-specific operating experience related to water ponding on the containment floor.

Request:

Discuss plant-specific operating experience related to water ponding on the containment floors, including frequency and resulting in corrective actions.

NextEra Energy Seabrook Response:

There is no operating experience found related to water ponding on the containment basement floor. Water ponding on the basement floor is not a characteristic of the design. The containment basement at elevation -26' is designed with sloped floors that are sloped toward the trenching and sump system to prevent water from ponding.

Request for Additional Information (RAI) 3.5.2.2.2.2-1

Background:

SRP-LR Section 3.5.2.2.2.2, item 1 addresses loss of material (spalling, scaling) and cracking due to freeze-thaw that could occur in below-grade inaccessible concrete areas of Groups 1-3, 5, and 7-9 structures. GALL Report item III.A3-6 for concrete located in moderate to severe weathering conditions suggests existing concrete exposed to potential freeze-thaw have an air content of 3% to 6% and a water-to-cement ratio between 0.35 and 0.45.

Issue:

The LRA does not provide a water-to-cement ratio for the concrete, as discussed in SRP-LR Section 3.5.2.2.2.2.

Request:

Provide a water-to-cement ratio for the concrete to verify that it meets the recommendations of GALL Report item III.A3-6 for concrete structures located in regions corresponding to moderate to severe weathering conditions, or explain how the aging effect will be managed during the period of extended operation focusing on additional inspections or evaluations that may be necessary.

NextEra Energy Seabrook Response:

The License Renewal Application, Section 3.5.2.2.2.2, Page 3.5-20, 3rd paragraph, is changed to read as follows:

Due to the aggregate size used in Seabrook Station concrete, the air content of the concrete is higher then 6% as recommended by NUREG-1801 for freeze thaw resistance, but within the acceptable guidelines of ACI 201 and 318. ***Additionally, for some structures the water-to-cement ratio (which varies from 0.45 to 0.53) exceeds the recommendations of NUREG-1801 but was selected on the basis of strength requirements, per Specification "Standard Concrete Mixes".*** The concrete is a dense, durable mixture of sound, coarse aggregate, cement and water. Because of the slight variation in the concrete, Seabrook Station will manage the aging effect of loss of material and cracking of concrete due to freeze-thaw for the period of extended operation.

Request for Additional Information (RAI) 3.5.2.3.6-1

Background:

GALL Report, Volume 1, Table 5, item 49 recommends the ASME Section XI, Subsection IWF Program to manage loss of material of support members. The GALL Report Table 5 item is associated with GALL Unique item III.B1.1-11, which lists the material as stainless steel and steel in a treated water environment.

Issue:

LRA Table 3.5.2-6 contains two AMR line items which reference LRA Table 3.5.1, item 49 and credit the ASME Section XI, Subsection IWF Program for aging management of stainless steel ASME Class 2/3 supports in a raw water environment. One of the line items references Note A, while the other references Note H and plant specific Note 514, which states, "Seabrook Station will age manage this condition through the Structures Monitoring Program." However, the entry for the referenced item 49 in LRA Table 3.5.1 states "BWR only," with no discussion provided. This appears to be contradictory information, and does not clearly address how the stainless steel ASME Class 2/3 supports in a raw water environment are being managed for loss of material.

Request:

Identify which AMP will manage aging of AMSE Class 2/3 stainless steel supports in a raw water environment, and explain why the identified AMP is appropriate for the material environment combination.

NextEra Energy Seabrook Response:

Upon further review of LRA Table 3.5.2.-6, two line items were inadvertently addressed as "ASME Class 2/3 stainless steel supports in a raw water environment" these line items are "Miscellaneous Mechanical Equipment stainless steel supports in a raw water environment" (Pump Propeller Casing Supports in the Service Water Pump House Water Bays and in the Cooling Tower Water Basins). These supports will be managed under Structures Monitoring Program.

Based on the above discussion, the following changes are made to the Seabrook Application.

1. LRA Table 3.5.2-6 on page 3.5-233 is revised as follows:

Component Type	Intended Function	Material	Environment	Aging Effect Requiring Management	Aging Management Program	NUREG 1801 Vol. 2 Item	Table 3.X.1 Item	Note
~~ASME Class 2/3~~ - ***Miscellaneous Mechanical Equipment*** - Stainless Steel - in Raw Water	Structural Support	Stainless Steel	Raw Water (External)	Loss of Material	~~ASME Section XI, Subsection IWF Program~~ ***Structures Monitoring Program***	~~III.B1.1-11~~ ~~(TP-10)~~ ***V.D1-25 (EP-55)***	~~3.5.1-49~~ ***3.2.1-37***	~~H, 509,~~ ***E,*** 514
~~ASME Class 2/3~~ - ***Miscellaneous Mechanical Equipment*** - Stainless Steel - in Raw Water	Structural Support	Stainless Steel	Raw Water (External)	Loss of Material	~~ASME Section XI, Subsection IWF Program~~ ***Structures Monitoring Program***	~~III.B1.1-11~~ ~~(TP-10)~~ ***V.D1-25 (EP-55)***	~~3.5.1-49~~ ***3.2.1-37***	~~A, 509,~~ ***E, 514***

2. LRA Table 3.2.1, Item Number 3.2.1-37 on page 3.2-25 is revised as follows:

Item Number	Component	Aging Effect/Mechanism	Aging Management Programs	Further Evaluation Recommended	Discussion
3.2.1-37	Stainless steel piping, piping components, and piping elements exposed to raw water	Loss of material due to pitting, crevice, and microbiologically influenced corrosion	Open-Cycle Cooling Water System	No	***Consistent with NUREG-1801.*** ***Applicable: Miscellaneous Mechanical Equipment stainless steel in raw water (Pump Propeller Casing Supports in the Service Water Pump House Water Bays and in Cooling Tower Water Basins) aging effects will be managed at Seabrook with the Structures Monitoring Program, B.2.1.31.*** Not applicable. The Engineering Safety Features systems do not contain stainless steel piping, piping components, and piping elements exposed to raw water.

Request for Additional Information (RAI) 3.5.2.3.6-2

Background:

GALL Report Volume 1, Table 5, items 52 and 56, recommend the Structures Monitoring Program and the ASME Section XI, Subsection IWF Programs, respectively, to manage loss of mechanical function of sliding support surfaces.

Issue:

For the "Discussion" column of LRA Table 3.5.1, items 52 and 56; the LRA states, "there are no sliding support bearings of surfaces at Seabrook that are subject to this aging effect." However, items in LRA Tables 3.5.2-1, -5, and -6 reference these line items and credit the Structures Monitoring Program or the ASME Section XI, Subsection IWF Program for management of loss of mechanical function. This appears to be contradictory with the information provided in LRA Table 3.5.1 and does not clearly address how in-scope sliding surfaces are being managed for loss of mechanical function.

Request:

Identify which AMPs will manage in-scope sliding supports for loss of mechanical function, and explain why the identified AMPs are appropriate for the material-environment combination.

NextEra Energy Seabrook Response:

Upon further review of LRA Table 3.5.1, it was determined that sliding support surfaces were inadvertently omitted. Based on this, LRA Table 3.5.1, item 52, page 3.5-47 and item 56, page 3.5-49 are changed to read as follows:

Table 3.5.1

Summary Of Aging Management Evaluations for Structures and Structural Components

Item Number	Component	Aging Effect / Mechanism	Aging Management Program	Further Evaluation Recommended	Discussion
3.5.1-52	Groups B2 and B4: sliding support bearings and sliding support surfaces	Loss of mechanical function due to corrosion, distortion, dirt, overload, fatigue due to vibratory and cyclic thermal loads	Structures Monitoring Program	No	~~There are no sliding support bearings of surfaces at Seabrook that are subject to this aging effect.~~ ***Consistent with NUREG-1801.*** ***Seabrook manages the aging effect with the Structures Monitoring Program, B.2.1.31***
3.5.1-56	Groups B1.1, B1.2, and B1.3: Sliding surfaces	Loss of material function due to corrosion, distortion, dirt, overload, fatigue due to vibratory and cyclic thermal loads	ISI (IWF)	No	~~There are no sliding support bearings of surfaces at Seabrook that are subject to this aging effect.~~ ***Consistent with NUREG-1801.*** ***Seabrook manages the aging effect with the ASME Section XI, Subsection IWF Program, B.2.1.29***

Request for Additional Information (RAI) 3.3.2.2-1

Background:
LRA Section 3.3.2.2.11, associated with LRA Table 3.3.1, item 3.3.1-31, addresses loss of material due to pitting, crevice, and galvanic corrosion in of copper alloy piping, piping components, and piping elements that are exposed to treated water. The applicant stated that this item is not applicable because item 3.3.1-31 is applicable to boiling water reactors only. The staff reviewed LRA Sections 2.3.4 and 3.4 and found that there are in-scope copper alloy instrumentation elements, valve bodies and heat exchanger components exposed to treated water in the auxiliary steam condensate and feedwater systems thus these components are potentially vulnerable to loss of material due to pitting, crevice and galvanic corrosion.

Issue:
The staff noted that although loss of material due to selective leaching for these components is managed with Selective Leaching of Materials Program, there are no actions identified to manage loss of material due to pitting, crevice and galvanic corrosion for these components. The GALL Report states, in part, that loss of material

due to pitting and crevice corrosion could occur for copper alloy exposed to treated water.

Request:
Provide additional justification supporting the conclusion that copper alloy piping, piping components, and piping elements exposed to treated water would not be vulnerable to loss of material due to pitting, crevice and galvanic corrosion or describe the aging management program to be applied to manage pitting, crevice and galvanic corrosion of copper alloy components.

NextEra Energy Seabrook Response:
LRA Section 3.3.2.2.11 is associated with the Auxiliary System components. Auxiliary Steam Condensate, Condensate, and Feedwater systems were evaluated under Section 3.4 of the LRA (Aging Management of Steam and Power Conversion Systems) and therefore, aligned with Section 3.4.2.2.7.1 and line item 3.4.1-15. This item addresses loss of material due to pitting and crevice corrosion in copper alloy piping, piping components, and piping elements that are exposed to treated water. The copper alloy instrumentation elements, piping and fittings, valve bodies and heat exchanger components exposed to treated water are also shown as having loss of material due to pitting, and crevice corrosion and were also aligned to Table 3.4.1, item 3.4.1-15 (Reference Table 3.4.2-2 for the Auxiliary Steam Condensate system, Table 3.4.2-5 for the Condensate system, and Table 3.4.2-6 for the Feedwater system).

Request for Additional Information (RAI) 3.1.2.4-1

Background:

The GALL Report does not contain an AMR for steam generator tubes exposed to reactor coolant that could be affected by a reduction in heat transfer. For other materials and environments, the GALL Report typically suggests using a water chemistry program in conjunction with an inspection program for managing the reduction of heat transfer aging effect. In LRA Table 3.1.2-4, the applicant has indicated that a reduction of heat transfer is an aging effect relevant to the primary side of the steam generator tubes. The applicant has indicated it plans to use the Water Chemistry Program to manage this aging effect.

Issue:

The applicant has indicated in the LRA that a water chemistry program will be used to manage the aging effect of reduction of heat transfer for steam generated tubes exposed to reactor coolant. This appears to be in contrast to the GALL Report recommendation for a water chemistry program in conjunction with an inspection program to be used for managing the aging effect of reduction of heat transfer. It is not clear to the staff how a

water chemistry program alone will adequately manage the aging effect of reduction of heat transfer.

Request:

Justify why the Water Chemistry Program alone is sufficient to determine that steam generator tubes are not affected by reduction of heat transfer when exposed to reactor coolant.

NextEra Energy Seabrook Response:

Upon further review of the Steam Generator tubes with an internal environment of reactor coolant, it was determined that the reduction of heat transfer due to fouling was inadvertently added as an AMR line item. There is neither plant specific nor any industry operating experience that indicates potential reduction of heat transfer due to fouling inside the Steam Generator tubes exposed to reactor coolant. The following changes are made to the LRA to clarify this issue:

1. In Table 3.1.2-4, on Page 3.1-111 deleted the 3rd row as follows:

~~Steam Generator Tubes~~	~~Heat Transfer~~ ~~Pressure Boundary~~	~~Nickel Alloy~~	~~Reactor Coolant (Internal)~~	~~Reduction of Heat Transfer~~	~~Water Chemistry Program~~	~~None~~	~~None~~	~~H,~~ 4

2. In Table 3.1.2-4, on Page 3.1-114 revised Plant Specific Note 4 as follows:

4 ***Not Used*** ~~The aging effect/mechanism of reduction of heat transfer due to fouling is not in NUREG-1801 for this component, material, and environment. However, it is applicable to this combination and therefore, the Water Chemistry Program is used to manage the aging effects for this component, material, and environment combination.~~

Request for Additional Information (RAI) 3.3.2.15-1

Background:

The GALL Report does not contain an AMR for heat exchangers exposed to steam affected by reduction in heat transfer. For other materials and environments, the GALL Report typically suggests using a water chemistry program in conjunction with an inspection program for managing the reduction of heat transfer aging effect. In LRA Table 3.3.2-15, the applicant has indicated that reduction of heat transfer is an aging effect relevant to heat exchanger tubes exposed to steam. The applicant has indicated it plans to use the Water Chemistry Program to manage this aging effect.

Issue:

The applicant has indicated in the LRA that it plans to only use a Water Chemistry Program to manage the reduction of heat transfer for heat exchanger tubes exposed to reactor coolant. This appears to be in contrast to the GALL Report typical management of this aging effect. It is not clear to the staff how management of water chemistry alone will ensure that reduction of heat transfer is appropriately managed.

Request:

Justify why the Water Chemistry Program alone is sufficient to determine that heat exchanger tubes are not affected by reduction of heat transfer when exposed to steam.

NextEra Energy Seabrook Response:

The steam environment listed in Table 3.3.2-15 for FP-E-46 and FP-E-47 is potable water converted to steam, which is not the same steam environment listed in line item 3.4.1-39. The shell side steam environment for these two heat exchangers comes from the Auxiliary Steam Heating system which uses potable water. The steam environment listed in line item 3.4.1-39 is subject to the PWR secondary plant water chemistry program. Potable water converted to steam is not subject to the Water Chemistry Program and therefore, the Inspection of Internal Surfaces in Miscellaneous Piping and Ducting Components Program is a more appropriate program for age managing these heat exchangers. As part of the response to this RAI, the other heat exchanger components for these two heat exchangers, which were inadvertently assigned to the Water Chemistry Program, are being reassigned to the Inspection of Internal Surfaces in Miscellaneous Piping and Ducting Components Program.

Seabrook Station has preventive maintenance activities already in place to clean and inspect the external surfaces of the heat exchanger tubes for FP-E-46 and FP-E-47. The frequency of these maintenance activities is approximately every 4 years. These

inspections will indicate if cracking is occurring on the external surfaces of the heat exchanger tubes. Any evidence of cracking will be documented and evaluated under the corrective action program.

The external steam environment for the heat exchanger tubes in CO-E-111 is steam supplied from the Main Steam system, which is subject to the Water Chemistry Program. Therefore, the selection of the Water Chemistry Program as the aging management program is appropriate. In addition to the Water Chemistry Program, the heat exchanger tubes for CO-E-111 will be inspected under the One-Time Inspection Program to verify that cracking is not occurring. Any evidence of cracking will be documented and evaluated under the corrective action program.

Based on the above discussion, the following changes are made to the Seabrook Application:

1. In Table 3.3.2-15, on page 3.3-304, the 4th row is revised as follows:

Heat Exchanger Components (FP-E-46 & 47 Shell)	Pressure Boundary	Steel	Steam (Internal)	Loss of Material	***Inspection of Internal Surfaces in Miscellaneous Piping and Ducting Components*** ~~Water Chemistry Program~~ ~~One-Time Inspection Program~~	***None***~~VII I.C-4 (S-06)~~	***None***~~3.4.1-2~~	***G, 8***~~C~~

2. In Table 3.3.2-15, on page 3.3-304, the 5th row is revised as follows:

Heat Exchanger Components (FP-E-46 & 47 Tubes)	Heat Transfer Pressure Boundary	Stainless Steel	Steam (External)	Cracking	***Inspection of Internal Surfaces in Miscellaneous Piping and Ducting Components*** ~~Water Chemistry~~ Program	***None***~~VII I.A-10 (SP-44)~~	***None***~~3.4.1-39~~	***G 8***~~C~~

3. In Table 3.3.2-15, on page 3.3-304, the 6th row is revised as follows:

Heat Exchanger Components (FP-E-46 & 47 Tubes)	Heat Transfer Pressure Boundary	Stainless Steel	Steam (External)	Loss of Material	***Inspection of Internal Surfaces in Miscellaneous Piping and Ducting Components*** ~~Water Chemistry~~ Program	***None***~~VII I.A-12 (SP-43)~~	***None***~~3.4. 1-37~~	***G, 8***~~C~~

4. In Table 3.3.2-15, on page 3.3-305 the 2nd row is revised as follows:

Heat Exchanger Components (FP-E-46 & 47 Tubesheet)	Pressure Boundary	Stainless Steel	Steam (External)	Cracking	***Inspection of Internal Surfaces in Miscellaneous Piping and Ducting Components*** ~~Water Chemistry~~ Program	***None***~~VII I.A-10 (SP-44)~~	***None***~~3.4. 1-39~~	***G, 8***~~C~~

5. In Table 3.3.2-15, on page 3.3-305, the 3rd row is revised as follows:

Heat Exchanger Components (FP-E-46 & 47 Tubesheet)	Pressure Boundary	Stainless Steel	Steam (External)	Loss of Material	***Inspection of Internal Surfaces in Miscellaneous Piping and Ducting Components*** ~~Water Chemistry~~ Program	***None***~~VII I.A-12 (SP-43)~~	***None***~~3.4. 1-37~~	***G, 8***~~C~~

6. In Table 3.3.2-15, on page 3.3-317, note 8 is added as follows (Please note that Notes 6 and 7 were previously added under Supplement 2 dated November 15, 2010, Enclosure 2, Item 21, page 16 of 24):

8 Aging effect not in NUREG-1801 for this component, material, and environment combination. The steam environment is potable water (raw water) converted to steam. The Inspection of Internal Surfaces in Miscellaneous Piping and Ducting Components Program will be used to manage the aging effect of loss of material and cracking for this material and environment combination.

7. In Section 3.4.2.2.2.1, on page 3.4-13, the 1st partial paragraph is revised as follows:

corrosion in steel heat exchanger components exposed to steam in the Chemical and Volume Control~~,~~ and Hot Water Heating~~, and Fire Protection~~ systems. The Water Chemistry and One-Time Inspection Programs are described in Appendix B.

8. In Table 3.4-1, on page 3.4-21, line item 3.4.1-2 is revised as follows:

3.4.1-2	Steel piping, piping components, and piping elements exposed to steam	Loss of material due to general, pitting and crevice corrosion	Water Chemistry and One-Time Inspection	Yes, detection of aging effects is to be evaluated	Components in the Boron Recovery, Chemical and Volume Control, Containment Building Spray, ~~Fire Protection,~~ Hot Water, Nitrogen Gas, and Waste Processing Liquid systems have been aligned with this line item based on material, environment, and aging effect. Consistent with NUREG-1801. The One-Time Inspection Program, B.2.1.20, will be used to verify the effectiveness of the Water Chemistry Program, B.2.1.2, to manage loss of material due to general, pitting, and crevice corrosion in steel piping components and steel heat exchanger components exposed to steam. a) Steel piping components are contained in the Auxiliary Steam, Boron Recovery, Containment Building Spray, , Hot Water, Nitrogen Gas, and Waste Processing Liquid systems. a) Steel heat exchanger components are contained in the Chemical and Volume Control~~, Fire Protection,~~ and Hot Water Heating systems. See Subsection 3.4.2.2.2.1.

9. In Table 3.4.1, on page 3.4-33, line item 3.4.1-37 is revised as follows:

3.4.1-37	Steel, stainless steel, and nickel-based alloy piping, piping components, and piping elements exposed to steam	Loss of material due to pitting and crevice corrosion	Water Chemistry	No	Components in the Steam Generator ~~and Fire Protection~~ systems have been aligned to this line item due to material, environment, and aging effect. Consistent with NUREG-1801. The Water Chemistry Program, B.2.1.2, will be used to manage loss of material due to pitting and crevice corrosion in stainless steel piping components exposed to steam in the Auxiliary Steam, Feedwater, , Main Steam, and Steam Generator systems. Consistent with NUREG-1801. The Water Chemistry Program, B.2.1.2, will be used to manage loss of material due to pitting and crevice corrosion in stainless steel heat exchanger components exposed to steam in the Condensate ~~and Fire Protection~~ systems. Consistent with NUREG-1801. The Water Chemistry

10. In Table 3.4.1, on page 3.4-35, line item 3.4.1-39 is revised as follows:

3.4.1-39	Stainless steel piping, piping components, and piping elements exposed to steam	Cracking due to stress corrosion cracking	Water Chemistry	No	~~Components in the Fire Protection system have been aligned to this line item based on material, environment, and aging effect.~~ Consistent with NUREG-1801. The Water Chemistry Program, B.2.1.2, will be used to manage cracking due to stress corrosion cracking in stainless steel piping components exposed to steam in the Auxiliary Steam, Feedwater, Main Steam systems~~, and stainless steel heat exchanger components exposed to steam in the Condensate and Fire Protection systems~~. Consistent with NUREG-1801 for material, environment and aging effect, but a different aging management program is credited. The steam environment is potable water heated into steam. Therefore, the Water Chemistry Program is not applicable. The Inspection of Internal Surfaces in Miscellaneous Piping and Ducting Components Program (with exceptions), B.2.1.25, will be used to manage loss of material due to cracking in stainless steel piping components & stainless steel heat exchanger components exposed to steam environment in the Auxiliary Steam Heating system.

11. In Table 3.4.2-5, on page 3.2-71, the 4th row is revised as follows:

Heat Exchanger Components (1-CO-E-111 Tubes)	Pressure Boundary	Stainless Steel	Steam (External)	Cracking	Water Chemistry Program ***One-Time Inspection Program***	***None***~~VII I.A-10 (SP-44)~~	***None***~~3.4.1-39~~	***H, 3***~~C~~

12. In Table 3.4.2-5, on page 3.4-76, note 3 is added as follows: (Please note that Note 2 was previously added under Supplement 2 dated November 15, 2010, Enclosure 2, Item 23, page 22 of 24)

3 The aging effect is not in NUREG-1801 for this component type, material, and environment combination. Water Chemistry and One-Time Inspection Programs are used to manage the aging effect(s) applicable to this component type, material, and environment combination.

Request for Additional Information (RAI) 3.3.2.12-1

Background:

The program description in GALL Report XI.M24, "Compressed Air Monitoring" states that, "The program manages the effects of corrosion and the presence of unacceptable levels of contaminants on the intended function of the compressed air system. The AMP includes frequent leak testing of valves, piping, and other system components, especially those made of carbon steel and stainless steel." LRA Table 3.3.2-12 credits the Compressed Air Monitoring Program to manage the hardening and loss of strength aging effect for elastomer flexible hoses exposed to condensation (internal).

Issue:

The applicant's Compressed Air Monitoring AMP is being applied to materials beyond steel, stainless steel and copper alloys, which are the materials specified in the GALL Report for this AMP. Elastomer components exhibit different aging mechanisms than steel, and the observable indications of aging are substantially different from those of steel, stainless steel, or copper alloys. For example, the hardening of elastomer

components cannot be identified by air sampling. Therefore the inspections must be adapted to address detection of aging for the additional in-scope materials.

Request:

Provide details on the additional inspection methods to be used to ensure that the AMP will adequately address potential aging effects of the elastomer materials.

NextEra Energy Seabrook Response:

The Diesel Generator air compressors are replaced every ten years. During this scheduled replacement of the compressors, the flexible hoses on these compressors will also be replaced. Since the flexible hoses will be periodically replaced, the following changes have been made to the LRA:

1. In Table 3.3.2-12, on page 3.3-272, line item 4 is deleted as follows:

~~Flexible Hose~~	~~Pressure Boundary~~	~~Elastomer~~	~~Condensation (Internal)~~	~~Hardening and Loss of Strength~~	~~Compressed Air Monitoring Program~~	~~None~~	~~None~~	~~G~~

2. The following commitment is added to Section A.3 License Renewal Commitment List as follows:

No.	PROGRAM or TOPIC	COMMITMENT	UFSAR LOCATION	SCHEDULE
61	***Compressed Air Monitoring Program***	***Replace the flexible hoses associated with the Diesel Generator air compressors on a frequency of every 10 years.***	***A.2.1.14***	***Within ten years prior to entering the period of extended operation.***

3. In Section B.2.1.1.14, on page B-89, the 1st paragraph of the program description for Compressed Air Monitoring is revised as follows:

   The Seabrook Station Compressed Air Monitoring Program is an existing program that manages the aging effects of (~~a) hardening and loss of strength due to elastomer degradation,~~ (***a***) loss of material due to crevice, general, galvanic,

and pitting corrosion, and (*b*) reduction of heat transfer due to fouling of the plant compressed air systems components. The Seabrook Compressed Air Program manages aging in three systems: the plant compressed air system, the containment compressed air system, and the Diesel Generator compressed air subsystem. The program ensures an oil free dry air environment in the compressed air systems. The systems are comprised of components made of stainless steel, carbon steel and copper alloys.

Request for Additional Information (RAI) 3.3.2.2-1

Background:

The GALL Report recommends that elastomer and metallic components exposed to raw water be managed for hardening and loss of strength or loss of material by the Open-Cycle Cooling Water System Program. The Open-Cycle Cooling Water System Program consists of both preventive measures (chemical control to minimize microbial activity) and monitoring and trending (inspections and testing to detect aging). The LRA states that various components exposed to raw water will be managed by the Inspection of Internal Surfaces in Miscellaneous Piping and Ducting Component Program because the Open-Cycle Cooling Water System Program is not applicable to the raw water environments found in the boron recovery system, the chlorination system, ground water, radioactive liquid waste, domestic water, etc.

Issue:

The proposed program to manage these components in raw water is only an inspection program and does not include chemical treatments to eliminate biological activity. It is not clear how the opportunistic visual inspections in the Internal Surfaces in Miscellaneous Piping and Ducting Component Program will be able to manage aging of components in raw water systems that do not include chemical treatments.

Request:

Justify the use of the Inspection of Internal Surfaces in Miscellaneous Piping and Ducting Component Program, which is only a visual inspection program to manage aging in the raw water environment.

NextEra Energy Seabrook Response:

The Inspection of Internal Surfaces in Miscellaneous Piping and Ducting Components Program was chosen as the aging management program because the internal raw water environments such as ground water, potable water, and condensation are not covered by any other aging management program.

The GALL Rev 1, XI.M38 "Inspection of Internal Surfaces in Miscellaneous Piping and Ducting Program", states that *"The program consists of inspections of the internal surfaces of steel piping, piping components, ducting, and other components that are not covered by other aging management programs"*.

Additionally, GALL Rev 2, which was issued in December 2010 states that *"The program consists of inspections of the internal surfaces of metallic piping, piping components, ducting, polymeric components, and other components that are exposed to air-indoor uncontrolled, air outdoor, condensation, and any water system other than open-cycle cooling water system (XI.M20), closed treated water system (XI.M21A), and fire water system (XI.M27)".*

This conclusion is also supported in GALL Rev 2 by the following line items, which list the Inspection of Internal Surfaces in Miscellaneous Piping and Ducting Components Program as the only required aging management program in raw water environments.

- VII.C1.AP-207 for hardening and loss of strength of elastomers in raw water
- VII.C1.AP-208 for erosion of elastomers in raw water
- VIII.G.SP-136 for loss of material and MIC of steel in raw water

The Seabrook Station operating experience has also shown that equipment inspections performed as part of routine maintenance has been successful at identifying and resolving corrosion or degradation before it affects the ability of the component to perform its intended function.

The Seabrook Station Inspection of Internal Surfaces in Miscellaneous Piping and Ducting Program is described in Appendix B, section B.2.1.25. The program includes exceptions to include (1) components made from other materials such as aluminum, cast austenitic stainless steel, copper alloy, copper alloy >15% Zn, elastomer, galvanized steel, gray cast iron, nickel alloy, and stainless steel and (2) additional aging effects of cracking, reduction of heat transfer, and hardening and loss of strength.

Justification was provided for detection of the additional aging effects in these additional materials listed above. As part of the enhancement for elastomers, the program was revised to detect hardening and loss of strength in components made from elastomers by visual examinations and non-visual examinations such as tactile techniques, which include scratching, bending, folding, stretching and pressing in conjunction with the visual examinations.

Request for Additional Information (RAI) 3.4.2.2-1

Background:

GALL Report Volume 1, Table 4, item 8 recommends that steel piping, piping components, and piping elements exposed to raw water be managed for loss of material due to general, pitting, crevice, and microbiologically-influenced corrosion and fouling

by a plant-specific program. In LRA Tables 3.4.2-2 and 3.4.2-3, the applicant stated that for steel and gray cast iron components exposed to raw water, the Inspection of Internal Surfaces in Miscellaneous Piping and Ducting Components Program will be used to manage the aging effects of loss of material. LRA Section B.2.1.25 states that this program relies on opportunistic visual inspections. The LRA AMR items refer to LRA Table 3.4.1, item 3.4.1-8, and cite generic Note E.

Issue:

The staff noted that the GALL Report item VIII.E-6 recommends that for steel heat exchanger components exposed to raw water in condensate systems that the GALL Report AMP XI.M20, "Open-Cycle Cooling Water System," will be used to manage the aging. The staff also noted that the LRA Table 3.4.2-2 and 3.4.2-3 items are similar to the GALL Report item VIII.E-6. The staff further noted that the GALL Report AMP XI.M20 is not applicable, because the components in the LRA items do not transfer heat from a safety-related component to the ultimate heat sink; however, given that the LRA and GALL Report items are constructed of the same materials and exposed to the same environment, the staff believes that a preventative program with chemical treatments may be appropriate in the applicant's plant-specific program, particularly in light of the potential infrequent inspections that may occur due to managing these components with the Inspection of Internal Surfaces in Miscellaneous Piping and Ducting Components Program.

Request:

Justify how loss of material in steel and gray cast iron components exposed to raw water will be managed in the absence of preventative chemical treatments, in light of the potential infrequent inspections that may occur due to managing these components with the Inspection of Internal Surfaces in Miscellaneous Piping and Ducting Components Program.

NextEra Energy Seabrook Response:

Tables 3.4.2-2 and 3.4.2-3 provide the summary of aging management evaluations for the Auxiliary Steam Condensate and Auxiliary Steam Heating systems. As discussed in Section 2.3.4.3 of the LRA, the Auxiliary Steam Heating system provides low pressure saturated steam to various plant equipment/buildings for heating purposes. Similarly, as discussed in Section 2.3.4.2, the Auxiliary Steam Condensate system is part of the Auxiliary Steam Heating system and essentially returns the condensed steam from the heating system to the heating boiler. Both systems deal with the same water, one as steam and the other as condensate.

The make-up water to the systems is potable water or drinking water obtained from the town of Seabrook. A discussion of the use of this potable water as make-up water can be found in Table 3.4.1, item 8, on page 3.4-24 of the LRA.

The town of Seabrook drinking water is not considered treated water as it is does not begin as demineralized water and receive any other chemical treatment. The town of Seabrook water is therefore, considered a raw water environment. The Town of Seabrook drinking water is not covered by the Open-Cycle Cooling Water program since the Seabrook Station open cycle cooling water source is the Atlantic Ocean and the program focuses on aging management of components in the ocean water environment. Therefore, the steam and condensate environment of the town of Seabrook domestic water is not similar to the Atlantic Ocean water.

Seabrook Station selected the Inspection of Internal Surfaces In Miscellaneous Piping and Ducting Components as the appropriate program for age management of the Auxiliary Steam Condensate and Auxiliary Steam Heating systems because these systems meet the guidance in GALL XI.M38 Rev 1. The potable water is not included in any other aging management program and is steam or condensate. The inspection schedule is appropriate because it is what the GALL program prescribes as acceptable.

This selection of the Inspection of Internal Surfaces in Miscellaneous Piping and Ducting Components as the appropriate aging management program for this environment is further validated by the recent publication of NUREG-1801 Rev 2. Line item VII.E5.AP-270 (on page VII E5-3) of the NUREG-1801 Rev. 2 identifies steel piping, piping components and piping elements exposed to raw water (potable) for loss of material due to general (steel only), pitting, and crevice corrosion. The recommended aging management program is listed as Chapter XI.M38, "Inspection of Internal Surfaces in Miscellaneous Piping and Ducting Components" with no further evaluation required. Additionally, NUREG-1801 Rev. 2, page VIII G-8, for item VIII.G.SP-136 also identifies that for steel piping, piping components and piping elements exposed to raw water for loss of material and fouling, the recommended aging management program is Chapter XI.M38, Inspection of Internal Surfaces in Miscellaneous Piping and Ducting Components, with no further evaluation required.

Furthermore, NUREG-1801, Rev. 2, XI.M38, Inspection of Internal Surfaces In Miscellaneous Piping and Ducting Components program description discussion indicates that (1) The program consists of inspections of the internal surfaces of metallic piping, piping components, ducting, polymeric components, and other components that are exposed to air-indoor uncontrolled, air outdoor, condensation, and any water system other than open-cycle cooling water system (XI.M20), closed treated water system (XI.M21A), and fire water system (XI.M27), and (2) These internal inspections are performed during the periodic system and component surveillances or during the performance of maintenance activities when the surfaces are made accessible for visual inspection.

The NUREG-1801, Rev. 2 clarifies how this material/ environment combination should be addressed and validates the Seabrook Station's approach.

Request for Additional Information (RAI) 3.4.2.3-1

Background:

GALL Report, Volume 1, Table 4, item 37 recommends that steel, stainless steel, and nickel based alloy components exposed to steam be managed for loss of material due to pitting and crevice corrosion by the GALL Report AMP XI.M2 "Water Chemistry." In LRA Table 3.4.2-3, the applicant stated that for steel, stainless steel, and gray cast iron components exposed to steam, the Inspection of Internal Surfaces in Miscellaneous Piping and Ducting Components Program will be used to manage the aging effects of loss of material. LRA Section B.2.1.25 states that this program relies on opportunistic visual inspections.

Issue:

GALL Report AMP XI.M2, "Water Chemistry," recommends preventive actions such as specifications for chemical species, sampling and analysis frequencies, and corrective actions to control water chemistry. The applicant's proposed program to manage the items in LRA Table 3.4.2-3 relies on opportunistic visual inspections and no preventive actions.

Request:

Justify how loss of material in steel, stainless steel, and gray cast iron components exposed to steam will be managed in the absence of preventative actions, in light of the potential infrequent inspections that may occur due to managing these components with the Inspection of Internal Surfaces in Miscellaneous Piping and Ducting Components Program.

NextEra Energy Seabrook Response:

Table 3.4.2-3 provides the summary of aging management evaluations for the Auxiliary Steam Heating system. As discussed in Section 2.3.4.3 of the LRA, the Auxiliary Steam Heating system provides low pressure saturated steam to various plant equipment/buildings for heating purposes.

The make-up water to the systems is potable water obtained from the town of Seabrook. The steam environment listed in Table 3.4.2-3 for the Auxiliary Steam Heating system components is potable water (raw water) converted to steam, which is not the same steam environment listed in line item 3.4.1-37. The PWR secondary plant water chemistry program is not applicable to potable water and therefore line item 3.4.1-37 should not have been selected for steam environment converted from potable water. The Inspection of Internal Surfaces in Miscellaneous Piping and Ducting Components Program is a more

appropriate program for age managing these components.

The selection of the Inspection of Internal Surfaces in Miscellaneous Piping and Ducting Components Program as the appropriate aging management program for this environment is further validated by the recent publication of NUREG-1801 Rev 2. Line item VII.E5.AP-270 (on page VII E5-3) of the NUREG-1801 Rev. 2 identifies steel piping, piping components and piping elements exposed to raw water (potable) for loss of material due to general (steel only), pitting, and crevice corrosion. The recommended aging management program is listed as Chapter XI.M38, "Inspection of Internal Surfaces in Miscellaneous Piping and Ducting Components" with no further evaluation required. Additionally, NUREG-1801 Rev. 2, page VIII G-8, for item VIII.G.SP-136 also identifies that for steel piping, piping components and piping elements exposed to raw water for loss of material and fouling, the recommended aging management program is Chapter XI.M38, Inspection of Internal Surfaces in Miscellaneous Piping and Ducting Components, with no further evaluation required.

Furthermore, NUREG-1801, Rev. 2, XI.M38, Inspection of Internal Surfaces In Miscellaneous Piping and Ducting Components program description discussion indicates that (1) The program consists of inspections of the internal surfaces of metallic piping, piping components, ducting, polymeric components, and other components that are exposed to air-indoor uncontrolled, air outdoor, condensation, and any water system other than open-cycle cooling water system (XI.M20), closed treated water system (XI.M21A), and fire water system (XI.M27), and (2) These internal inspections are performed during the periodic system and component surveillances or during the performance of maintenance activities when the surfaces are made accessible for visual inspection.

The correlation of the Seabrook Stations program selection for this material and environment combination of steel and stainless steel in raw water, to the updated GALL Rev 2 guidance, validates the original selection of the Inspection of Internal Surfaces in Miscellaneous Piping and Ducting Components Program as the appropriate aging management program for Auxiliary Steam Heating system.

To better address the internal environment of the Auxiliary Steam Heating system environment to NUREG-1801, the following changes are made to the LRA:

1. On page 3.4-57, in Table 3.4.2-3, the 5th row is revised as follows:

Filter Element	Filter	Stainless Steel	Steam (Internal/External)	Loss of Material	Inspection of Internal Surfaces in Miscellaneous Piping and Ducting Components Program	***None*** ~~***VIII.B1-3 (SP-43)***~~	***None*** ~~***3.4.1-37***~~	***G,1*** ~~***E, 1***~~

2. On page 3.4-58, in Table 3.4.2-3, the 1st row is revised as follows:

Filter Housing	Leakage Boundary (Spatial)	Gray Cast Iron	Steam (Internal)	Loss of Material	Inspection of Internal Surfaces in Miscellaneous Piping and Ducting Components Program	***None*** ~~***VIII.B1-8 (S-07)***~~	***None*** ~~***3.4.1-37***~~	***G,1*** ~~***E, 1***~~

3. On page 3.4-58, in Table 3.4.2-3, the 4th row is revised as follows:

Filter Housing	Pressure Boundary	Steel	Steam (Internal)	Loss of Material	Inspection of Internal Surfaces in Miscellaneous Piping and Ducting Components Program	***None*** ~~***VIII.B1-8 (S-07)***~~	***None*** ~~***3.4.1-37***~~	***G,1*** ~~***E, 1***~~

4. On page 3.4-59, in Table 3.4.2-3, the 1st row is revised as follows:

Heat Exchanger Components (Unit Heater 1-ASH-UH-197 and 198 Heating Coil)	Leakage Boundary (Spatial)	Stainless Steel	Steam (Internal)	Loss of Material	Inspection of Internal Surfaces in Miscellaneous Piping and Ducting Components Program	***None*** ~~***VIII.B1-3 (SP-43)***~~	***None*** ~~***3.4.1-37***~~	***G,1*** ~~***E, 1***~~

5. On page 3.4-59, in Table 3.4.2-3, the 4th row is revised as follows:

Heat Exchanger Components (Unit Heater 1-ASH-UH-73, 74, 75, 110 and 111 Heating Coil)	Heat Transfer Pressure Boundary	Stainless Steel	Steam (Internal)	Loss of Material	Inspection of Internal Surfaces in Miscellaneous Piping and Ducting Components Program	***None*** ~~***VIII.B1-3 (SP-43)***~~	***None*** ~~***3.4.1-37***~~	***G,1*** ~~***E, 1***~~

6. On page 3.4-60, in Table 3.4.2-3, the 4th and the 5th rows are revised as follows:

Heat Exchanger Components (1-ASH-E-218 Shell)	Pressure Boundary	Steel	Steam (Internal)	Loss of Material	Inspection of Internal Surfaces in Miscellaneous Piping and Ducting Components Program	***None*** ~~***VIII.B1-8 (S-07)***~~	***None*** ~~***3.4.1-37***~~	***G,1*** ~~***E, 1***~~
Heat Exchanger Components (1-ASH-E-218 Tubes)	Heat Transfer Pressure Boundary	Steel	Steam (External)	Loss of Material	Inspection of Internal Surfaces in Miscellaneous Piping and Ducting Components Program	***None*** ~~***VIII.B1-8 (S-07)***~~	***None*** ~~***3.4.1-37***~~	***G,1*** ~~***E, 1***~~

7. On page 3.4-61, in Table 3.4.2-3, the last row is revised as follows:

Piping and Fittings	Leakage Boundary (Spatial) Pressure Boundary	Steel	Steam (Internal)	Loss of Material	Inspection of Internal Surfaces in Miscellaneous Piping and Ducting Components Program	***None*** ~~***VIII.B1-8 (S-07)***~~	***None*** ~~***3.4.1-37***~~	***G,1*** ~~***E, 1***~~

8. On page 3.4-62, in Table 3.4.2-3, the 7th row is revised as follows:

Thermowell	Leakage Boundary (Spatial)	Steel	Steam (Internal)	Loss of Material	Inspection of Internal Surfaces in Miscellaneous Piping and Ducting Components Program	***None*** ~~***VIII.B1-8 (S-07)***~~	***None*** ~~***3.4.1-37***~~	***G,1*** ~~***E, 1***~~

9. On page 3.4-63, in Table 3.4.2-3, the 4th row is revised as follows:

Valve Body	Pressure Boundary	Gray Cast Iron	Steam (Internal)	Loss of Material	Inspection of Internal Surfaces in Miscellaneous Piping and Ducting Components Program	***None*** ~~***VIII.B1-8 (S-07)***~~	***None*** ~~***3.4.1-37***~~	***G,1*** ~~***E, 1***~~

10. On page 3.4-63, in Table 3.4.2-3, the last row is revised as follows:

Valve Body	Leakage Boundary (Spatial)	Stainless Steel	Steam (Internal)	Loss of Material	Inspection of Internal Surfaces in Miscellaneous Piping and Ducting Components Program	***None*** ~~***VIII.B1-3 (SP-43)***~~	***None*** ~~***3.4.1-37***~~	***G,1*** ~~***E, 1***~~

11. On page 3.4-64, in Table 3.4.2-3, the last row is revised as follows:

Valve Body	Leakage Boundary (Spatial) Pressure Boundary	Steel	Steam (Internal)	Loss of Material	Inspection of Internal Surfaces in Miscellaneous Piping and Ducting Components Program	***None*** ~~***VIII.B1-8 (S-07)***~~	***None*** ~~***3.4.1-37***~~	***G,1*** ~~***E, 1***~~

12. On page 3.4-65, in Table 3.4.2-3, plant specific Note 1 is revised as follows:

1 ***Aging effect is not in NUREG-1801 for this component, material, and environment combination. The steam environment is potable water (raw water) converted to steam. Seabrook Station will use the Inspection of Internal surfaces in Miscellaneous Piping and Ducting Components Program to manage the aging effect.***~~NUREG-1801 specifies the Water Chemistry Program for this line item. The Inspection of Internal Surfaces in Miscellaneous Piping and Ducting Program is substituted to manage the aging effect(s) applicable to this component type, material, and environment combination. The Auxiliary Steam Heating system is not applicable to the Water Chemistry Program.~~

13. On page 3.4-33, in Table 3.4.1, line item 3.4.1-37 is revised as follows:

3.4.1-37	Steel, stainless steel, and nickel-based alloy piping, piping components, and piping elements exposed to steam	Loss of material due to pitting and crevice corrosion	Water Chemistry	No	Components in the Steam Generator and Fire Protection systems have been aligned to this line item due to material, environment, and aging effect. Consistent with NUREG-1801. The Water Chemistry Program, B.2.1.2, will be used to manage loss of material due to pitting and crevice corrosion in stainless steel piping components exposed to steam in the Auxiliary Steam, Feedwater, , Main Steam, and Steam Generator systems. Consistent with NUREG-1801. The Water Chemistry Program, B.2.1.2, will be used to manage loss of material due to pitting and crevice corrosion in stainless steel heat exchanger components exposed to steam in the Condensate and Fire Protection systems. Consistent with NUREG-1801. The Water Chemistry Program, B.2.1.2, will be used to manage loss of material due to pitting and crevice corrosion in nickel alloy piping components exposed to steam in the Steam Generator. Consistent with NUREG-1801. The Water Chemistry Program, B.2.1.2, will be used to manage loss of material due general (additional aging effect), pitting, and crevice corrosion in steel piping components exposed to steam in the Feed Water, Main Steam, and Steam Generator systems. Consistent with NUREG-1801. The Water Chemistry Program, B.2.1.2, will be used to manage loss of material due general (additional aging effect), pitting, and crevice corrosion in steel tanks, and steel turbine casing exposed to steam in the Feedwater system.

					~~Consistent with NUREG-1801 for material, environment and aging effect, but a different aging management program is credited The steam environment is potable water heated into steam. Therefore, the Water Chemistry Program is not applicable. The Inspection of Internal Surfaces in Miscellaneous Piping and Ducting Components Program (with exceptions), B.2.1.25, will be used to manage loss of material due to pitting and crevice corrosion in stainless steel piping components & stainless steel heat exchanger components, and general (additional aging mechanism), pitting, and crevice corrosion in steel piping components & steel heat exchanger components exposed to steam environment in the Auxiliary Steam Heating system.~~

Request for Additional Information (RAI) 3.5.2.5-1

Background:

SRP-LR Table 3.5-1, item 46 states that Group 5 fuel pool liners are subject to aging effects of cracking due to SCC and loss of material due to pitting and crevice corrosion and recommends that the aging effects will be managed by the GALL Report AMP XI.M2 "Water Chemistry" and monitoring of spent fuel pool water level and leakage from the leak chase channels. In LRA Tables 3.5.2-5 and 3.5.2-6, the applicant stated that for stainless steel components exposed to treated water or treated borated water, the Water Chemistry Program will be used to manage the aging effect of loss of material. These LRA AMR items refer to LRA Table 3.5.1, item 3.5.1-46 for Group 5 fuel pool liners.

Issue:

The AMR items reference LRA Table 3.5.1, item 3.5.1-46 for Group 5 fuel pool liners; however, the applicant did not state that monitoring of spent fuel pool water level and leakage from the leak chase channels will be implemented to manage aging of these components.

Request:

Justify why monitoring of spent fuel pool water level and level of fluid in the leak chase channel will not be implemented to manage the aging effect of loss of material due to pitting and crevice corrosion.

NextEra Energy Seabrook Response:

In addition to the Water Chemistry Program, monitoring of spent fuel pool water level and level of fluid in the leak chase channel are used to manage the aging effect of loss of material due to pitting and crevice corrosion of the Spent Fuel Pool liner.

Based on the above discussion, the following changes are made to the LRA.

1. LRA Section 3.5, Table 3.5.1, Page 3.5-46 is revised as follows:

3.5.1-46	Group 5: fuel pool liners	Cracking due to stress corrosion cracking; loss of material due to pitting and crevice corrosion	Water Chemistry and Monitoring of spent fuel pool water level and level of fluid in the leak chase channel	No	The spent fuel pool is normally maintained less than 140°F, therefore Stress Corrosion Cracking is not an aging effect that requires management. Crevice and pitting corrosion are managed by the Water Chemistry Program, B.2.1.2, ***and by monitoring of spent fuel pool water level and level of fluid in the leak chase channel.***

2. LRA Section 3.5, Table 3.5.2-5, Page 3.5-223 is revised as follows:

PST - Stainless Steel -FSB- Exposed to Treated Borated Water	Shelter, Protection	Stainless Steel	Treated Borated Water (External)	Cracking	Water Chemistry Program	III.A 5-13 (T-14)	3.5.1 -46	A, 507, ***518***
PST - Stainless Steel -FSB- Exposed to Treated Borated Water	Shelter, Protection	Stainless Steel	Treated Borated Water (External)	Loss of Material	Water Chemistry Program	III.A 5-13 (T-14)	3.5.1 -46	A, ***518***

3. In LRA Section 3.5, Table 3.5.2-5, plant specific Note 518 is added to Page 3.5-230 as follows:

   518 For this component, material, environment, and aging effect, aging management by the Water Chemistry Program is augmented by monitoring of spent fuel pool water level and leakage from the leak chase channels.

Request for Additional Information (RAI) 3.5.2.5-02

Background:

The GALL Report, Volume 1, Table 3, item 80 recommends that metallic components exposed to raw water be, managed for loss of material by the Open-Cycle Cooling Water System Program. The Open-Cycle Cooling Water System Program consists of both chemical control to minimize microbial activity and also inspection activities to detect aging. The LRA states that various components exposed to raw water will be managed by the Structures Monitoring Program rather than the Open-Cycle Cooling Water System Program because the raw water is in lined and unlined concrete sumps.

Issue:

The applicant's proposed program to manage these components in raw water is only an inspection program and does not include chemical treatments to eliminate biological activity. It is not clear how the opportunistic visual inspections will be able to manage aging of components in a raw water system that does not include chemical treatments.

Request:

Justify the use of the Structures Monitoring Program, which is only a visual inspection program, to manage aging of metallic components in the raw water environment.

NextEra Energy Seabrook Response:

The philosophy used during the Aging Management Review process was that any water that was not controlled (such as water leaking into a sump) would be considered as raw water. The water in these sumps is not part of the Open Cycle Cooling Water System and receives no chemical addition; therefore, the Open Cycle Cooling Water Program is not an appropriate aging management program.

The normal conditions of the lined and unlined concrete sumps are dry or slightly wetted. If water enters the lined or unlined concrete sumps, the sump pump removes the water, leaving the line or unlined concrete sumps dry or slightly wetted. Since the sumps can be wetted they are conservatively consider to be in a raw water environment. The Structures

Monitoring Program will be utilized to perform an inspection for degradation and any degradation identified will be appropriately dispositioned.

Request for Additional Information (RAI) 3.3.2.3.4-1

Background:

In LRA Tables 3.3.2-4, 3.3.2-15, and 3.3.2-36, the applicant stated that for fiberglass piping, fittings, and filter housings (travelling screen housing) exposed to condensation (external) or raw water (internal) there is no aging effect and no AMP is proposed. The associated AMR items cite generic Note F and plant-specific Notes 1, 5, and 6 which state that "Fiberglass components in a condensation environment (external) or a Raw Water environment'{internal) are not exposed to high levels of ultraviolet radiation, high temperatures, or ozone, and therefore have no aging effects that require aging management. This is consistent with plant operating experience."

Issue:

The staff reviewed the associated items in the LRA and found that fiberglass piping exposed to condensation (external) or raw water (internal) is not specifically addressed in the GALL Report. However, the staff noted that the environments of interest could cause water infiltration into the fiberglass which could induce blistering, spalling, or cracking.

Request:

State why the specific specification/grade of fiberglass material utilized in these components is not susceptible to blistering, spalling, or cracking when exposed to condensation environment (external) or raw water environment (internal) or propose how the aging effects will be managed.

NextEra Energy Seabrook Response:

Seabrook Station uses centrifugally cast fiberglass and filament-wound fiberglass piping in the Chlorination and Fire Protection systems. The applicable Seabrook Station piping specification shows the following Class designations and material requirements for these systems:

Chlorination - Pipe Class E3	Material: Fiberglass reinforced vinyl ester or bisphenol-A-polyester pipe.
Chlorination - Pipe Class E4	Material: Fiberglass centrifugal casting; ASTM D-2997 RTRP, Type II, Grade 1, Class C. Minimum 50 mil pure resin corrosion barrier or RB-1520.

Fire Protection - Pipe Class E6	Material: Fiberglass centrifugal casting; ASTM D-2997 RTRP, Type II, Grade 1, Class C. Minimum 90 mil pure resin corrosion barrier.

ASTM Standard D-2997, "Standard Specification for Centrifugally Cast Fiberglass (Glass-Fiber-Reinforced Thermosetting Resin) Pipe" provides classification of piping by type, grade, and class as well as other design bases. The following applies to this piping:

Type II - Centrifugally cast pipe

Grade 1 - Glass-fiber-reinforced epoxy-resin pipe

Class C - Epoxy-resin liner, non-reinforced

The specifications for use of the centrifugally cast fiberglass piping used at Seabrook Station (pipe classes E4 and E6) clearly identify the piping as being of the epoxy resin type and not the vinyl ester resin type. Based on technical input from the manufacturer, there is no industry experience of blistering, spalling, or cracking due to water absorption in fiberglass piping constructed with the epoxy resin.

Fiberglass reinforced vinyl ester pipe (pipe class E3) is used in the Chlorination system in the service water pumphouse and the intake and discharge structures to supply chlorinated raw water to the pump forebay and to the sea water inlet. This piping is designed for sea water at a maximum design temperature of 100 °F. At Seabrook Station, the design maximum sea water inlet temperature is 65 °F. Additionally, this piping is all located in-doors and not subjected to UV exposure. Discussion with the manufacturer notes that hot water in the range of 170 °F to 180 °F or above can cause blistering, spalling, or cracking in vinyl ester resin based fiberglass pipe. These effects are a long term response which, based on the manufacturer's experience, is limited to the resin rich liner of the interior surface of the pipe and there are no documented cases of this causing measurable strength reduction of the glass reinforced structural wall. This phenomenon is limited to vinyl ester or poly ester based products and only occurs if the temperature is elevated. In lower "ambient" temperature raw water, sea water, tap water or similar water services, this blistering, spalling, or cracking does not occur.

The fiberglass traveling screen enclosures serve only as a spray shield when the screen wash system in the service water pumphouse is operating. The enclosure internal surface is not immersed in water and the external surface is not normally coated with condensation but seasonal condensation is not unusual. The design maximum sea water inlet temperature is 65 °F. Discussions with the manufacturer of the traveling screens note that both the inner and outer surfaces of the fiberglass portion of the enclosure are coated with gel-coat. In the absence of UV exposure (these enclosures are indoors) the gel-coat will prevent water absorption and subsequent blistering, spalling, or cracking would be highly unlikely.

Based on the technical information available, the operating conditions of the in-scope fiberglass components and discussions with the manufacturers, the fiberglass components in use at Seabrook Station are not susceptible to aging effects related to water absorption.

This is supported by over 20 years of operating experience at Seabrook Station with no reports of degradation of fiberglass due to water absorption or UV exposure and subsequent blistering, spalling, or cracking.

Request for Additional Information (RAI) 3.2.2.2.6-01

Background:

SRP-LR, Section 3.2.2.2.6, discusses stainless steel miniflow orifices in the high pressure safety injection pumps' minimum flow lines. The SRP-LR references LER 50-275/94-023 which documents operating experience where extended use of a centrifugal high pressure safety injection pump for charging caused erosion in the miniflow orifice and resulted in lower than required flow being available through the injection line.

The SRP-LR recommends that a plant-specific AMP be evaluated for erosion of the orifice. Appendix A.1.2.3.4 states that detection of aging effects should occur before there is a loss of the structure's or component's intended function(s).

Seabrook LRA Section 2.3.3.3 states that one of the intended functions of the chemical and volume control system (CVCS) is to provide emergency core cooling and that a portion of the system is used to provide high head emergency cooling water injection. Seabrook LRA Table 3.2.1, item 3.2.1-12 and Section 3.2.2.2.6 state that the Inspection of Internal Surfaces in Miscellaneous Piping and Ducting Components Program will be used to manage loss of material due to erosion of stainless steel high pressure pump miniflow orifices in the CVCS.

Seabrook LRA Section B.2.1.25, states that the Inspection of Internal Surfaces in Miscellaneous Piping and Ducting Components Program provides visual inspections that are capable of detecting loss of material due to erosion and that program inspections will be inspections of opportunity, performed during pre-planned periodic system and component surveillances or during maintenance activities when the systems are opened and the surfaces made accessible for visual inspection.

Issue:

If inspections are performed in a timely manner, the staff considers visual inspections performed in accordance with the Inspection of Internal Surfaces in Miscellaneous Piping and Ducting Components Program to be adequate to detect loss of material due to erosion in a flow orifice before loss of the orifice's intended function. However, it is not clear to the staff whether the high pressure pump miniflow orifice(s) in the CVCS are periodically available for visual inspection due to scheduled preventive maintenance or periodic surveillances, or whether they would become available for inspection only as the result of corrective maintenance.

Request:

1. Explain whether the CVCS high pressure pump miniflow orifice(s) are routinely available for inspection due to scheduled preventive maintenance or periodic surveillances.
   a. If they are routinely available, state the typical interval between inspections.
   b. If they are not routinely available, explain how inspection timing will be controlled to ensure that erosion of the miniflow orifices would be detected prior to failure of its intended function.
2. Describe the visual inspection that will be done on the miniflow orifices and state whether any physical measurement of the orifice diameter would be made.

NextEra Energy Seabrook Response:

The CVCS high pressure pump miniflow orifices are welded in place and therefore, are not routinely available for internal visual inspections. Additionally, the miniflow orifice design utilizes multiple welded internal plates with multiple holes on each plate. For example, one end of the miniflow orifice has eighteen holes and the other end has two (see below for the pictures of a spare miniflow orifice). This orifice design makes volumetric examinations for dimensional comparison impractical.

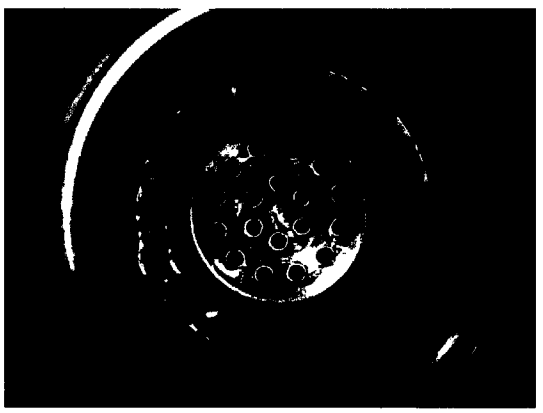

Therefore, loss of material due to erosion will be managed by the Water Chemistry Program. The Water Chemistry Program is expected to mitigate the potential for erosion in the miniflow orifices by controlling the buildup of corrosion products and particulates that could contribute to erosion. Additionally, Seabrook Station Technical Specifications require quarterly inservice testing of the CVCS high pressure pumps. This testing will provide further assurance by providing early indication of orifice degradation. The pump is always tested in the same lineup where the flow path is only through the miniflow orifice. Pump flow and differential pressure are trended by the system engineer. If the

acceptance criterion is not met, then the condition would be documented and evaluated under the corrective action program. The SRP-LR references LER 50-275/94-023 which documents operating experience where extended use of a centrifugal high pressure safety injection pump for charging caused erosion in the miniflow orifice and resulted in lower than required flow being available through the injection line. In addition to the quarterly testing of the pump, the miniflow line has an automatic isolation valve that will close on a Safety Injection signal when flow reaches a certain value preventing a loss of Emergency Core Cooling System injection flow.

Based on the above discussion, the following changes are made to the LRA.

1. In Table 3.3.2-3, on page 3.3-172, the 2nd row is revised as follows:

Orifice	Pressure Boundary Throttle	Stainless Steel	Treated Borated Water (Internal)	Loss of Material	***Water Chemistry Program*** ~~Inspection of Internal Surfaces in Miscellaneous Piping and Ducting Program~~	V.D1-14 (E-24)	3.2.1-12	E, ~~5~~ ***8***

2. On page 3.3-188, a new plant specific note is added to Table 3.3.2-3 as follows:

   8 NUREG-1801 specifies a plant-specific program for this line item. The Water Chemistry Program will be used to manage the aging effect(s) applicable to this component type, material, and environment combination.

3. Section 3.2.2.2.6, on page 3.2-12, the 2nd paragraph is revised as follows:

   ~~The Seabrook Station will implement the Inspection of Internal Surfaces in Miscellaneous Piping and Ducting Components Program, B.2.1.25,~~ ***Seabrook will use the Water Chemistry Program, B.2.1.2,*** to manage loss of material due to erosion of the stainless steel high pressure pump mini-flow orifice in the Chemical and Volume Control System. ~~The Inspection of Internal Surfaces in Miscellaneous Piping and Ducting Components program is described in Appendix B.~~ ***The Water Chemistry Program is described in Appendix B.***

4. In Table 3.2.1, on page 3.2-19, line item 3.2.1-12 is revised as follows:

3.2.1-12	Stainless steel high pressure safety injection (charging) pump mini flow orifice exposed to treated borated water	Loss of material due to erosion	A plant-specific aging management program is to be evaluated for erosion of the orifice due to extended use of the centrifugal HPSI pump for normal charging.	Yes, plant specific	Components in the Chemical and Volume Control system have been aligned to this line item based on material, environment, and aging effect. Consistent with NUREG-1801 with exceptions. ~~The Inspection of Internal Surfaces in Miscellaneous Piping and Ducting Components Program (with exceptions), B.2.1.25~~ ***Water Chemistry Program, B.2.1.2***, will be used to manage loss of material due to erosion of the stainless steel high pressure pump mini-flow orifice exposed to treated borated water in the Chemical and Volume Control system. The Engineering Safety Features systems do not contain stainless steel high pressure safety injection (charging) pump mini flow orifice exposed to treated borated water. See Subsection 3.2.2.2.6.

Request for Additional Information (RAI) 3.3.2.2.4-1

Background:

LRA Section 3.3.2.2.4, item 1 states that cracking due to SCC and cyclic loading in stainless steel non-regenerative heat exchanger components is managed by the Water Chemistry Program and the effectiveness of the Water Chemistry Program will be confirmed by the One-Time Inspection Program. The acceptance criterion in SRP-LR Section 3.3.2.2.4 item 1 states that cracking due to SCC is managed by monitoring and controlling primary water chemistry but states that the effectiveness of water chemistry control programs should be verified, because water chemistry controls do not preclude cracking due to SCC and cyclic loading. The GALL Report recommends that a plant-specific AMP be evaluated to ensure these aging effects are adequately managed and an acceptable verification program includes temperature and radioactivity monitoring of the shell side water and eddy current testing of tubes. .

Issue:

LRA Section B.2.1.20, One-Time Inspection, states that the inspection sample includes locations where the most severe aging effect(s) would be expected to occur, and that inspection methods may include visual (or remote visual), surface or volumetric examinations, or other established nondestructive examination techniques. However, it is not clear whether the non-regenerative heat exchangers will be included in the sample of components to be inspected and what inspection techniques will be used to manage the aging effect of cracking in the heat exchanger tubes.

In addition, the LRA does not discuss whether temperature and radioactivity monitoring of the shell side water is performed to verify the integrity of the heat exchangers.

Request:

1. Confirm whether the non-regenerative heat exchangers will be included in the sample of components to be inspected, and identify the inspection technique that will be used to detect cracking in the heat exchanger tubes.
2. Confirm that temperature and radioactivity monitoring of the shell side water is performed to verify the integrity of the heat exchangers, or provide the bases for not performing these recommended activities.

NextEra Energy Seabrook Response:

1) The non-regenerative heat exchangers will be included in the sample of components to be inspected in the One-Time Inspection Program. Eddy Current Testing will be utilized to detect cracking in the stainless steel tubes in the non-regenerative heat exchangers.

2) Temperature and radioactivity monitoring of the shell side water is performed to verify the integrity of the heat exchangers.

Based on the above discussion, the following changes are made to the LRA:

1. In Section 3.3.2.2.4.1, Item 1, on page 3.3-69 revised the 2nd full paragraph write-up for as follows:

   Seabrook Station will implement the Water Chemistry Program, B.2.1.2, and One-Time Inspection Program, B.2.1.20, to manage cracking due to stress corrosion cracking and cyclic loading of the stainless steel heat exchanger components exposed to treated borated water >140°F in the Chemical and Volume Control system. ***Temperature and Radioactivity monitoring of the shell side water are performed to verify the Integrity of the non regenerative heat exchangers.*** The Water Chemistry effectiveness will be confirmed by the One-Time Inspection Program. The Water Chemistry and One-Time Inspection Programs are described in Appendix B.

2. On page 3.3-87, in Table 3.3.1, line item 3.3.1-7 is revised as follows:

3.3.1-7	Stainless steel non-regenerative heat exchanger components exposed to treated borated water >60°C (>140°F)	Cracking due to stress corrosion cracking and cyclic loading	Water Chemistry and a plant-specific verification program. An acceptable verification program is to include temperature and radioactivity monitoring of the shell side water, and eddy current testing of tubes.	Yes, plant specific	Consistent with NUREG-1801. The Water Chemistry Program, B.2.1.2 and the One-Time Inspection Program, B.2.1.20, will be used to manage cracking dues to stress corrosion cracking and cyclic loading of the stainless steel non-regenerative heat exchanger components exposed to treated borated water 60°C (>140°F) in the Chemical and Volume Control System. ***Temperature and Radioactivity monitoring of the shell side water are performed to verify the Integrity of the non regenerative heat exchangers.*** See subsection 3.3.2.2.4.1.

Request for Additional Information (RAI) 3.4.1-37-01

Background:

LRA Table 3.4.1, item 3.4.1-37 discusses loss of material from steel, stainless steel and nickel-based alloy piping, piping components, and piping elements exposed to steam. The applicant proposes to manage this aging process through the use of its aging management program "Water Chemistry" (LRA B.2.1.2). The GALL Report recommends that this aging process be managed through the use of the AMP "Water Chemistry" (GALL Report XI.M2). The applicant proposes that the AMR items are consistent with the GALL Report (generic Note A).

Issue:

In its review of components associated with item 3.4.1-37 the staff noted three potential inconsistencies between the aging management approach taken for these components and the approach contained in or implied by the GALL Report.

The first potential inconsistency involves the environment to which the components are exposed. The environment listed in the LRA for these items is "secondary feedwater/steam". The environment for the corresponding GALL Report item is steam. The staff notes that the GALL Report recommends managing aging for nickel alloy components exposed to steam through the use of the Water Chemistry Program. The staff also notes that the GALL Report recommends managing aging for steam/water environments through the use of the Water Chemistry Program, plus an inspection-based verification program. For piping and pressure boundary components the inspection program is typically One-Time Inspection, or GALL AMP XI.M32, ASME Section XI Inservice Inspection, XI.M1. For steam generator internal components the inspection program is typically Steam Generator Tube Integrity, GALL AMP XI.M19. This difference in environment appears to make the use of item 3.4.1-37 inappropriate for these components

The second potential inconsistency involves the aging effects postulated for these components. Based on LRA Table 3.2.1-4, Steam Generator, it appears that the aging effects "cracking" and "loss of material" are being applied to the steam generator tubes while only the aging effect "loss of material" is being applied to the remaining components. Although the remaining components are not specifically addressed in the GALL Report, the staff finds no specific distinction in the GALL Report which would indicate that both the aging effects "cracking" and "loss of material" should not be applied to all the components under consideration.

The third potential inconsistency involves the classification of the components. SRP-LR Table 3.4-1, item 37 classifies the components under consideration as "piping, piping components, or piping elements." The staff concurs with the applicant that the orifices and the steam generator feedwater nozzle (thermal sleeve) may be appropriately

considered piping, piping components, and piping elements. The staff finds that the steam generator feedwater inlet ring (J tube) and the steam generator tubes are more appropriately classified as steam generator internal components. This classification appears to make the use of item 3.4.1-37 inappropriate for the J tubes and the steam generator tubes.

Request:

1. Justify why the use of a verification AMP is either inconsistent with the GALL Report or technically unnecessary.
2. Justify why it is unnecessary to consider both the aging effects "loss of material" and "cracking" for each of the components under consideration.
3. Justify why these components should be considered piping, piping components, or piping elements as proposed by item 3.4.1-37.
4.

NextEra Energy Seabrook Response:

1. The Steam Generator Tube Integrity Program will be used as the verification AMP for the steam generator feedwater inlet ring (J tube) and the steam generator tubes.

   The steam generator orifice and steam generator feedwater nozzle (thermal sleeve) are part of the steam nozzle and feedwater nozzle and are not accessible for visual inspections.
2. Cracking will be added as an aging mechanism on the steam generator orifices, steam generator Feedwater inlet ring (J tube), and steam generator Feedwater nozzle (thermal sleeve). Cracking was already identified on steam generator tubes as an aging effect.
3. The steam generator feedwater inlet ring (J tube), steam generator feedwater inlet ring support, steam generator tubes, and steam generator tube sheet are not considered piping, piping components, and piping elements and should not have been aligned to line item 3.4.1-37. Additionally, since the steam environment listed in line item 3.4.1-37 is not the same as secondary Feedwater/steam environment, line items for the "orifice" and "steam generator Feedwater nozzle (thermal sleeve)" in Table 3.1.2-4 should not have been aligned to line item 3.4.1-37.

Based on the above discussion, the following changes are made to the LRA:

1. On page 3.1-95, in Table 3.1.2-4, a new 1st and 2nd rows is added as follows:

Orifice	***Pressure Boundary*** ***Throttle***	***Nickel Alloy***	***Secondary Feedwater/Steam (External)***	***Cracking***	***Water Chemistry Program***	***None***	***None***	***H,10***
Orifice	***Pressure Boundary*** ***Throttle***	***Nickel Alloy***	***Secondary Feedwater/Steam (Internal)***	***Cracking***	***Water Chemistry Program***	***None***	***None***	***H,10***

2. On page 3.1-95, in Table 3.1.2-4, the 1st and 2nd rows are revised as follows:

Orifice	Pressure Boundary Throttle	Nickel Alloy	Secondary Feedwater/Steam (External)	Loss of Material	Water Chemistry Program	***None***~~VIII.B1-1 (SP-18)~~	***None***~~3.4.1-37~~	***H,11***~~A~~
Orifice	Pressure Boundary Throttle	Nickel Alloy	Secondary Feedwater/Steam (Internal)	Loss of Material	Water Chemistry Program	***None***~~VIII.B1-1 (SP-18)~~	***None***~~3.4.1-37~~	***H,11***~~A~~

3. On page 3.1-97, in Table 3.1.2-4, the 3rd row is revised as follows:

Steam Generator Feedwater Inlet Ring	Pressure Boundary	Steel	Secondary Feedwater/Steam (External)	Loss of Material	***Steam Generator Tube Integrity Program*** Water Chemistry Program	***None***~~VIII.B1-8 (S-07)~~	***None***~~3.4.1-37~~	***H,*** ~~7A~~

4. On page 3.1-97, in Table 3.1.2-4, the 5th row is revised as follows:

Steam Generator Feedwater Inlet Ring	Pressure Boundary	Steel	Secondary Feedwater/Steam (Internal)	Loss of Material	***Steam Generator Tube Integrity Program*** Water Chemistry Program	***None***~~VIII.B1-8 (S-07)~~	***None***~~3.4.1-37~~	***H,*** ~~7A~~

5. On page 3.1-98, in Table 3.1.2-4, the 1st and 2nd rows are revised as follows:

Steam Generator Feedwater Inlet Ring (J Tube)	Pressure Boundary	Nickel Alloy	Secondary Feedwater/Steam (External)	Loss of Material	***Steam Generator Tube Integrity Program*** Water Chemistry Program	***None***~~VIII.B1-1 (SP-18)~~	***None***~~3.4.1-37~~	***H, 8***~~A~~
Steam Generator Feedwater Inlet Ring (J Tube)	Pressure Boundary	Nickel Alloy	Secondary Feedwater/Steam (Internal)	Loss of Material	***Steam Generator Tube Integrity Program*** Water Chemistry Program	***None***~~VIII.B1-1 (SP-18)~~	***None***~~3.4.1-37~~	***H, 8***~~A~~

6. On page 3.1-98, in Table 3.1.2-4, the following new rows are added after the 1st row as follows:

Steam Generator Feedwater Inlet Ring ***(J Tube)***	***Pressure Boundary***	***Nickel Alloy***	***Secondary Feedwater/Steam (External)***	***Cracking***	***Steam Generator Tube Integrity Program*** ***Water Chemistry Program***	***None***	***None***	***H, 9***

Steam Generator Feedwater Inlet Ring (J Tube)	***Pressure Boundary***	***Nickel Alloy***	***Secondary Feedwater/Steam (Internal)***	***Cracking***	***Steam Generator Tube Integrity Program*** ***Water Chemistry Program***	***None***	***None***	***H, 9***

7. On page 3.1-98, in Table 3.1.2-4, the 3rd row is revised as follows:

Steam Generator Feedwater Inlet Ring Support	Structural Support	Steel	Secondary Feedwater/Steam (External)	Loss of Material	***Steam Generator Tube Integrity Program*** Water Chemistry Program	***None~~VIII.B1-8 (S-07)~~***	***None~~3.4.1-37~~***	***H, 7~~C~~***

8. On page 3.1-98, in Table 3.1.2-4, the following new rows are added after the 4th row as follows:

Steam Generator Feedwater Nozzle (Thermal Sleeve)	***Pressure Boundary***	***Nickel Alloy***	***Secondary Feedwater/Steam (External)***	***Cracking***	***Water Chemistry Program***	***None***	***None***	***H,10***
Steam Generator Feedwater Nozzle (Thermal Sleeve)	***Pressure Boundary***	***Nickel Alloy***	***Secondary Feedwater/Steam (Internal)***	***Cracking***	***Water Chemistry Program***	***None~~)~~***	***None***	***H,10***

9. On page 3.1-98, in Table 3.1.2-4, the 5th and 6th rows are revised as follows:

Steam Generator Feedwater Nozzle (Thermal Sleeve)	Pressure Boundary	Nickel Alloy	Secondary Feedwater/Steam (External)	Loss of Material	Water Chemistry Program	***None***~~VIII.B1-1 (SP-18)~~	***None***~~3.4.1-37~~	***H,11***~~A~~
Steam Generator Feedwater Nozzle (Thermal Sleeve)	Pressure Boundary	Nickel Alloy	Secondary Feedwater/Steam (Internal)	Loss of Material	Water Chemistry Program	***None***~~VIII.B1-1 (SP-18)~~	***None***~~3.4.1-37~~	***H,11***~~A~~

10. On page 3.1-110, in Table 3.1.2-4, the 3rd row is revised as follows:

Steam Generator Tubes	Heat Transfer Pressure Boundary	Nickel Alloy	Secondary Feedwater/Steam (External)	Loss of Material	***Steam Generator Tube Integrity Program*** Water Chemistry Program	***None***~~VIII.B1-1 (SP-18)~~	***None***~~3.4.1-37~~	***H, 8***~~C~~

11. On page 3.1-111, in Table 3.1.2-4, the 4th row is revised as follows:

Steam Generator Tube Sheet	Pressure Boundary	Steel With Nickel Cladding	Secondary Feedwater/Steam (External)	Loss of Material	Steam Generator Tube Integrity Program Water Chemistry Program	***None***~~VIII.B1-8 (S-07)~~	***None***~~3.4.1-37~~	***H, 7***~~C~~

12. On page 3.1-114, in Table 3.1.2-4, Notes 7, 8, 9, 10, and 11 are added as follows (Notes 5 and 6 were previously added as part of the response to RAI 3.1.2.2.4-01):

7 ***The aging effect for loss of material due to general, pitting, and crevice corrosion is not in NUREG-1801 for this component material and environment combination. The Water Chemistry and the Steam Generator Tube Integrity Programs are used to manage loss of material in these steam generator components.***

8 ***The aging effect of loss of material due to pitting and crevice corrosion is not in NUREG-1801 for this component material and environment combination. The Water Chemistry and the Steam Generator Tube Integrity Programs are used to manage loss of material in these steam generator components.***

9 ***The aging effect of cracking due to stress corrosion cracking is not in NUREG-1801 for this component material and environment combination. The Water Chemistry and the Steam Generator Tube Integrity Programs are used to manage cracking in these steam generator component.***

10 ***The aging effect of cracking due to stress corrosion cracking is not in NUREG-1801 for this component material and environment combination. The Water Chemistry Program is used to manage cracking in these steam generator components.***

11 ***The aging effect for loss of material due to pitting, and crevice corrosion is not in NUREG-1801 for this component material and environment combination. The Water Chemistry Program is used to manage loss of material in these steam generator components.***

13. On page 3.4-33, in Table 3.4.1, line item 3.4.1-37 is revised as follows:

3.4.1-37	Steel, stainless steel, and nickel-based alloy piping, piping components, and piping elements exposed to steam	Loss of material due to pitting and crevice corrosion	Water Chemistry	No	Components in the ~~Steam Generator and~~ Fire Protection systems have been aligned to this line item due to material, environment, and aging effect. Consistent with NUREG-1801. The Water Chemistry Program, B.2.1.2, will be used to manage loss of material due to pitting and crevice corrosion in stainless steel piping components exposed to steam in the Auxiliary Steam, Feedwater, , Main Steam~~, and~~

					~~Steam Generator~~ systems. Consistent with NUREG-1801. The Water Chemistry Program, B.2.1.2, will be used to manage loss of material due to pitting and crevice corrosion in stainless steel heat exchanger components exposed to steam in the Condensate and Fire Protection systems. ~~Consistent with NUREG-1801. The Water Chemistry Program, B.2.1.2, will be used to manage loss of material due to pitting and crevice corrosion in nickel alloy piping components exposed to steam in the Steam Generator.~~ Consistent with NUREG-1801. The Water Chemistry Program, B.2.1.2, will be used to manage loss of material due general (additional aging effect), pitting, and crevice corrosion in steel piping components exposed to steam in the Feed Water, ***and*** Main Steam~~, and Steam Generator~~ systems. Consistent with NUREG-1801. The Water Chemistry Program, B.2.1.2, will be used to manage loss of material due general (additional aging effect), pitting, and crevice corrosion in steel tanks, and steel turbine casing exposed to steam in the Feedwater system. Consistent with NUREG-1801 for material, environment and aging effect, but a different aging management program is credited The steam environment is potable water heated into steam. Therefore, the Water Chemistry Program is not applicable. The Inspection of Internal Surfaces in Miscellaneous Piping and Ducting Components Program (with exceptions), B.2.1.25, will be used to

					manage loss of material due to pitting and crevice corrosion in stainless steel piping components & stainless steel heat exchanger components, and general (additional aging mechanism), pitting, and crevice corrosion in steel piping components & steel heat exchanger components exposed to steam environment in the Auxiliary Steam Heating system.

Request for Additional Information (RAI) 3.3.2.3.4·1

Background:

In LRA Tables 3.3.2-4 and 3.3.2-26 the applicant stated that for polyvinyl chloride (PVC) piping, piping components and piping elements, filter housings, and valve bodies exposed to an internal raw water environment located in the chlorination and plant floor drains systems, there is no aging effect and no AMP is proposed. The AMR line items cite generic Note F and a plant specific note, "Unlike metals, Polymers do not display corrosion rates. Rather than depending on an oxide layer for protection, they depend on chemical resistance to the environment to which they are exposed. The plastic is either completely resistant to the environment or it deteriorates. Therefore, acceptability for the use of Polymers within a given environment is a design driven criterion. Once the appropriate material is chosen, the system will have no aging effects. This is consistent with plant operating experience." LRA Table 3.0-1 defines raw water and states that it may contain contaminants including oil and boric acid, depending on the location, as well as originally treated water that is not monitored by a chemistry program.

Issue:

The staff noted that it is possible that the polymeric components could be exposed to an environment of raw water that includes contaminants (e.g., high concentrations of chlorine, certain compositions of lubricating oils) that could potentially have an aging effect of cracking, blistering and loss of material due to the environment. In particular:

1. The staff believes that PVC is subject to minor to moderate attack when in a chlorine environment. The staff does not have sufficient plant-specific data to determine that this environment will not cause aging effects in the PVC components in the chlorination systems.
2. LRA Section 2.3.3.26 states that the plant floor drain system is designed to pass the runoff from the fire water system; however, these drains could contain floor

runoff during normal operation. The staff does not have sufficient plant-specific data to determine what potentially harmful chemical compounds flow through this piping. In particular, the staff does know the composition of lubricating oils in plant equipment that could contain compounds that will cause aging effects in PVC components.

Request:

1. State why there is no aging effect requiring management for PVC components in the chlorination system due to the environment containing high concentrations of chlorine.
2. State whether the plant floor drain PVC components are exposed to chemical compounds (e.g., certain compositions of lubricating oil) that would result in an aging effect requiring aging management and if they are, propose an aging management program to manage the aging effect.

NextEra Energy Seabrook Response:

1. Table 3.3.2-4 shows "Filter Housing" (CL-S-256), "Instrumentation Element" (CL-FE-3672), and "Piping and Fittings" with Polymer material.

   CL-FE-3672 is manufactured with body material of PVDF (Polyvinylidene Fluoride) or polypropylene. PVDF is described as "a specialty plastic material in the fluoropolymer family; it is used generally in applications requiring the highest purity, strength, and resistance to solvents, acids, bases and heat and low smoke generation during a fire event." Polypropylene is described as "an addition polymer made from the monomer propylene, it is rugged and unusually resistant to many chemical solvents, bases and acids." The "Instrument Element" shown in Table 3.3.2-4 shows this as Polymer (PVDF) and is correctly identified as no aging management required.

   CL-S-256 is inadvertently listed as Polymer (PVC) in the LRA. This strainer was replaced with a Hastelloy strainer; this is a nickel alloy and will be age managed with other nickel alloy components in raw water (internal) and in condensation (external) environments. Table 3.3.2-4 "Filter Housing" is revised to reflect this material change and these environments. Nickel alloy in condensation (external) environment is age managed for loss of material by the External Surfaces Monitoring Program (B.2.1.24). Nickel alloy in raw water (internal) environment is age managed for loss of material in accordance with GALL item VII.C1-13 as noted in LRA Section 3.3.1-78 by the Inspection of Internal Surfaces in Miscellaneous Piping and Ducting Components Program (B.2.1.25).

Based on the above discussion, the following changes are made to the LRA.

1a. In Section 3.3.2.1.4, on page 3.3-11, the 5th bullet under Materials is revised as follows:

- Polymer (~~PVC and~~ PVDF)

1b. In Table 3.3.2-4, on page 3.3-189, the 6th and 7th rows are revised as follows:

Filter Housing	Leakage Boundary (Spatial)	***Nickel Alloy*** ~~Polymer~~ ~~(PVC)~~	Condensation (External)	~~None~~ ***Loss of Material***	~~None~~ ***External Surfaces Monitoring Program***	None	None	***G*** ~~F, 1~~
Filter Housing	Leakage Boundary (Spatial)	***Nickel Alloy*** ~~Polymer~~ ~~(PVC)~~	Raw Water (Internal)	~~None~~ ***Loss of Material***	~~None~~ ***Inspection of Internal Surfaces in Miscellaneous Piping and Ducting Components Program***	~~None~~ ***VII.C1-13 (AP-53)***	~~None~~ ***3.3.1-78***	~~F, 1~~ ***E, 2***

1c. In Table 3.3.2-4, piping and fittings in the Chlorination system is inadvertently shown as Polymer (PVC). Although there is Polymer (PVC) piping in the Chlorination system, none of it is within the scope of license renewal. Therefore, in Table 3.3.2-4, on page 3.3-190, the 4th and the 5th rows are deleted as follows:

~~Piping and Fittings~~	~~Leakage Boundary (Spatial)~~	~~Polymer (PVC)~~	~~Air-Indoor Uncontrolled (External)~~	~~None~~	~~None~~	~~None~~	~~None~~	~~F, 1~~
~~Piping and Fittings~~	~~Leakage Boundary (Spatial)~~	~~Polymer (PVC)~~	~~Raw Water (Internal)~~	~~None~~	~~None~~	~~None~~	~~None~~	~~F, 1~~

2. Table 3.3.2-26 for the Plant Floor Drain System shows "Piping and Fittings" and "Valve Body" with polymer (PVC) material and an internal environment of raw water. The applicable piping and valves are associated with the sump pumps in the

intake and discharge transition structures. These sump pumps collect sea water leakage, if any, from Circulating Water, and Service Water piping and components in those buildings as well as groundwater in-leakage and condensation in the building. There are no contaminants, including oil and boric acid, normally found in sumps that would result in an aging effect requiring management.

Request for Additional Information (RAI) 3.3.2.3.29-1

Background:

LRA Table 3.3.2-29 states that titanium piping, fittings and heat exchanger components exposed to either raw water (external), closed cycle cooling water (internal), or air with borated water leakage are only susceptible to either reduction of heat transfer, or there is no aging effect. The plant-specific Note 3 states that titanium has superior resistance to general, pitting, crevice and microbiologically influenced corrosion in both air and water environments due to a protective oxide film. The plant-specific Note 4 states that titanium does not have any aging effects in air with borated water leakage. However, titanium in raw water (e.g., saltwater) can undergo crevice corrosion at certain chloride levels and temperatures. In addition, depending on the type of titanium and the specific environment, titanium is known to be susceptible to cracking.

Issue:

It is not clear to the staff how the applicant ruled out cracking or loss of material as aging effects for the various titanium components.

Request:

Justify the exclusion of additional aging effects, including cracking and loss of material, for the titanium piping, fittings, and heat exchanger components. Specifically, provide information on the type of titanium alloy and its susceptibility to aging effects. If it is determined that additional aging effects need to be considered during the period of extended operation, describe how these aging issues will be managed.

NextEra Energy Seabrook Response:

The titanium components within the scope of license renewal consist of the primary component cooling system water heat exchanger tubes, channel head, and small bore piping connecting tube side vent valves to the heat exchanger. The tubes and all tube side wetted components/surfaces are titanium grade 2, except for the tubesheet and channel head cover, which are steel clad with titanium grade 1. The small bore piping is also titanium grade 2. Grade 1 and grade 2 titanium are unalloyed titanium.

The maximum design temperature for the heat exchangers is 200°F; however, normal operating temperatures are well below 160°F (heat exchanger inlet and outlet temperatures are less than 70°F with the plant at 100% power) for the shell side (closed-cycle cooling water) materials, and less than 65°F for the tube side (raw water/seawater) materials. During refueling outages, with RHR in service, heat exchanger inlet and outlet temperatures are less than 100°F. The use of Grades 1 and 2 titanium effectively minimizes the possibility of loss of material or cracking in these low temperature raw-water, closed-cycle cooling water, and air with borated water leakage environments. NUREG-1801 Rev 2, EPRI 1010639, "Non-Class 1 Mechanical Implementation Guideline and Mechanical Tools", and ASM Metals Handbook support this position for unalloyed titanium as described below.

NUREG-1801 Revision 2 provides the following information related to the aging management of titanium materials.

- "The category titanium includes unalloyed titanium (ASTM grades 1-4) and various related alloys (ASTM grades 5, 7, 9, and 12). The corrosion resistance of titanium is a result of the formation of a continuous, stable, highly adherent protective oxide layer on the metal surface."
- "Titanium and titanium alloys may be susceptible to crevice corrosion in saltwater environments at elevated temperatures (>160°F). Titanium Grades 5 and 12 are resistant to crevice corrosion in seawater at temperatures as high as 500°F. Stress corrosion cracking of titanium and its alloys is considered applicable in sea water or brackish raw water systems if the titanium alloy contains more than 5% aluminum or more than 0.20% oxygen or any amount of tin. ASTM Grades 1, 2, 7, 11, or 12 are not susceptible to stress corrosion cracking in seawater or brackish raw water."

EPRI 1010639, "Non-Class 1 Mechanical Implementation Guideline and Mechanical Tools" also discusses the following potential aging effects in titanium.

- "Titanium alloys exhibit negligible corrosion rates in seawater to temperatures as high as 260°C (500°F)" [Appendix A, Treated Water]
- "For the purposes of this tool, SCC of titanium and its alloys is considered an applicable aging mechanism in treated water systems, in the presence of chlorides, if the titanium alloy is not ASTM grade 1, 2, 7, 11, or 12 and contains more than 5% aluminum or more than 0.20% oxygen, or any amount of tin." [Appendix A, Treated Water]
- "Titanium and titanium alloys are also susceptible to crevice corrosion although it requires significant aqueous chloride contamination (>1000 ppm) at elevated temperatures (>160°F) to be subject to this attack". [Appendix B, Raw Water]
- "Grades 1, 2, 7, 11, and 12 of titanium and its alloys are virtually immune to SCC except in a few specific environments (such as anhydrous methanol/halide solutions, red fuming nitric acid (HNO3), and liquid cadmium), none of which are applicable in raw water systems." [Appendix B, Raw Water]

- "Therefore, for the purposes of this tool, SCC of titanium and its alloys is considered an applicable aging mechanism in sea and/or brackish raw water systems if the titanium alloy is not ASTM grade 1, 2, 7, 11, or 12 and contains more than 5% aluminum or more than 0.20% oxygen, or any amount of tin." [Appendix B, Raw Water]
- "Similar to the resistance of stainless steels and nickel-base alloys, concentrated boric acid is not known to attack titanium and titanium alloys. As a result, loss of material by boric acid wastage is not an applicable aging effect for stainless steel or nickel-base alloy, copper and copper alloy with < 15% Zn, and titanium and titanium alloy components." [Appendix E, External Surfaces]

Corrosion of titanium and titanium alloys is discussed in ASM Metals Handbook, Ninth Edition, Volume 13, "Corrosion." Specifically, this handbook states that:

- "The excellent corrosion resistance of titanium alloys results from the formation of very stable, continuous, highly adherent, and protective oxide films on metal surfaces. Because titanium metal itself is highly reactive and has an extremely high affinity for oxygen, these beneficial surface oxide films form spontaneously and instantly when fresh metal surfaces are exposed to air and/or moisture. In fact, a damaged oxide film can generally reheal itself instantaneously if at least traces (that is, parts per million) of oxygen or water (moisture) are present in the environment."
- "The first class [of titanium], which includes ASTM grades 1, 2, 7, 11, and 12, is immune to SCC except in a few specific environments. These specific environments include anhydrous methanol/halide solutions, nitrogen tetroxide (N_2O_4), red fuming HNO_3, and liquid or solid cadmium."
- "Unalloyed titanium has provided more than 20 years of outstanding service in seawater for the chemical, oil refining, desalination, and power industries. As result of its immunity to ambient seawater corrosion, titanium is considered to be the technically correct material for many critical marine applications, including many naval and offshore components."

Based on the information and conclusions provided above, titanium components in use at Seabrook Station are not susceptible to aging effects of cracking and loss of material. This conclusion is also consistent with Station operating experience. These components have been in service for approximately 14 years, with no indications of cracking or loss of material.

Enclosure 2 to SBK-L-11015

Response to Request for Additional Information
Seabrook Station License Renewal Application
Time-Limited Aging Analysis - Set 7
and Associated LRA Changes

Request for Additional Information (RAI) 4.7.4-1

Background:

License renewal application (LRA) Section 4.7.4 provides the applicant's basis for dispositioning the cumulative usage factor (CUF) analyses for Class 1 High Energy Line Break (HELB) locations in accordance with 10 CFR 54.21 (c)(1)(i). The analyses will remain valid for the period of extended operation. LRA Section 4.7.4 refers to the design analyses for these piping locations, as discussed in Updated Final Safety Analysis Report (UFSAR) Section 3.6(B), "Protection Against Dynamic Effects Associated with the Postulated Rupture of Piping."

UFSAR Section 3.6(B) discusses eight primary reactor coolant loop locations that were approved in accordance with the applicant's leak-before-break (LBB) analysis. The applicant's LBB analysis permitted the removal of dynamic effect considerations from the scope of the applicant's large break loss of coolant accident (LOCA) analysis, provided in Chapter 15 of the UFSAR. The U.S. Nuclear Regulatory Commission's (NRC or the staff) approval of the LBB analysis for these piping locations was issued in accordance with 10 CFR Part 50, Appendix A, General Design Criteria, Criterion 4, *Dynamic Effects.*

Issue:

The LRA does not identify which ASME Code Class 1 reactor coolant pressure boundary locations in UFSAR Section 3.6(B) are within the scope of the LBB analysis and which of these piping locations currently remain within the scope of the applicant's HELB CUF analyses.

LRA Section 4.7.4 also dispositioned the CUF analyses in accordance with 10 CFR 54.21 (c)(1)(i) without identifying the current CUF values of record or the design basis transients in LRA Table 4.3.1-2 that are applicable to the HELB locations. The staff is not able to determine whether the disposition of 10 CFR 54.21 (c)(1)(i) for each of these piping locations is supported by the design transients projection basis that was provided in LRA Table 4.3.1-2.

Request:

1. Identify the ASME Code Class 1 piping locations discussed in UFSAR Section 3.6(B) that are within the scope of the LBB analysis and LRA Section 4.7.3. Identify the ASME Code Class 1 piping locations discussed in UFSAR Section 3.6(B) that are within the scope of the CUF analyses that are discussed in LRA Section 4.7.4. Clarify whether the current design basis uses the LBB analysis to replace any of the original CUF analyses for HELB piping locations.

2. Provide the CUF value of record and the design basis transients that are applicable to each HELB piping location that are associated with LRA Section 4.7.4. Provide the design cycle limits and 60-year projected cycle for the applicable transients if the projections have not been included in LRA Table 4.3.1-3.

NextEra Energy Seabrook Response:

Part 1 –

The eight primary reactor coolant loop locations discussed in UFSAR Section 3.6(B) are the postulated break locations established by Westinghouse, as documented in their report, WCAP-8082. These locations consisted of the Reactor Vessel Inlet and Outlet nozzles, The Steam Generator Inlet and Outlet nozzles, the Reactor Coolant Loop Inlet and Outlet Nozzles, the Crossover leg loop closure weld and the 50° elbow on the intrados. WCAP-10567, which provides the technical basis for LBB identified that the six safe-end weld locations enveloped all the intermediate welds. Hence all of the primary loop piping welds are within the scope of the LBB analysis and LRA Section 4.7.3.

All intermediate Class 1 piping locations, with the exception of the primary loop locations eliminated by LBB, were within the scope of break postulation elimination on the basis of CUF. The current design basis does not use LBB analysis to replace any of the original CUF analysis for HELB piping locations.

Part 2 -

There are eleven ASME Code Class 1 piping locations discussed in UFSAR Section 3.6(B) that are within the scope of the CUF analyses that are discussed in LRA Section 4.7.4. A break elimination evaluation was performed for these locations. The results are shown in the Table below. The design basis transients are shown in LRA Table 4.3.1-2.

The design cycle limits and 60-year projected cycle for the applicable transients are provided in LRA Table 4.3.1-3.

Summary of Break Reduction Fatigue Analysis

Source: Westinghouse Letter NAH-2853, "Jet Impingement/Pipe Whip Effects on Westinghouse-Supplied Components for Seabrook Nuclear Generating Station - Unit 1," Appendix A, Table 1. 10/30/85

Break Number	Results					
	Equation 12		Equation 13		CUF	
	Value (ksi)	Limit (ksi)	Value (ksi)	Limit (ksi)	Value	Limit
RC-49-2Ga	12.0	40.08	18.0	40.08	0.08	0.10
RC-49-2Gb	12.0	40.08	18.0	40.08	0.08	0.10
RC-49-2Gaa	12.0	40.08	18.0	40.08	0.08	0.10
RC-49-2Gbb	12.0	40.08	18.0	40.08	0.08	0.10
SI-201-4aG	4.83	46.44	42.13	46.44	0.085	0.10
SI-202-4aG	4.83	46.44	42.13	46.44	0.085	0.10
SI-203-4aG	4.83	46.44	42.13	46.44	0.085	0.10
SI-203-4aG0-1	4.83	46.44	42.13	46.44	0.085	0.10
SI-204-4aG	4.83	46.44	42.13	46.44	0.085	0.10
RH-155-1bs	10.69	47.16	47.00	47.16	0.04	0.10
RH-155-1G	10.69	47.16	47.00	47.16	0.04	0.10

Request for Additional Information (RAI) 4.7.14-1

Background:

LRA Section 4.7.14 summarizes the plant-specific time-limited aging analysis (TLAA) for environmental qualification (EQ) of the Emergency Diesel Generator (EDG). The applicant stated that the evaluation was performed by the original EDG manufacturer to support EQ of the EDGs in accordance with IEEE Standard 323. The applicant dispositioned this TLAA in accordance with 10 CFR 54.21(c)(1)(i), the analyses will remain valid for the period of extended operation. LRA Section 4.7.14 discusses the number of projected EDG scheduled start and unscheduled start cycles compared to the 5454 cycles that was used for the EQ evaluation . Specifically, the applicant indicated that the EQ was based on a total of 5454 full temperature cycles of EDG operation. The applicant also stated that the estimated number of cycles through 60 years of licensed operations is 2160 and that this accounts for EDG maintenance activities, EDG testing activities, and EDG starts during postulated design basis transient and accident events.

10 CFR 54.3 identifies six criteria that must be met for an analysis to be defined as a TLAA. Two of these criteria are: (1) Involve systems, structures, and components within the scope of license renewal, as delineated in § 54.4(a); and (2) Consider the effects of aging. For an analysis in the current licensing basis (CLB) that meets the definition of a TLAA, the applicant may disposition it in accordance with 10 CFR 54.21 (c)(1)(i) if it is demonstrated that the analyses will remain valid for the period of extended operation.

Issue 1:

LRA Section 4.7.14 does not identify which of these components were analyzed in the TLAA's cycle-dependent EQ analysis. LRA Section 4.7.14 also does not discuss the aging effect(s) in IEEE Standard 323 that were evaluated in the EDG EQ analysis.

Request 1:

Summarize the aging effects within the IEEE Standard 323, and identify the aging effects that were analyzed in the EQ analysis for these components. Clarify how the number of analyzed cycles (5454 cycles) in the EQ analysis is associated with the aging effects and any applicable acceptance criteria for these aging effects.

Issue 2:

It is not clear to the staff which design transients (i.e., those listed in LRA Table 4.3.1-2 or additional transients not listed in LRA Table 4.3.1-2) would result in a scheduled or unscheduled start of the EDGs. The staff requires identification of all transients or activities that will initiate a start of the EDGs and the 60-year projections for these transients so a comparison can be made to the 5454 cycle limit on EDG, to determine if the disposition of 10 CFR 54.21 (c)(1)(i) is appropriate.

It is also not clear to the staff when the applicant compares the number of analyz.ed cycles to the projections of the applicable transients or activities that will initiate an EDG start, if this is performed individually or cumulatively.

Request 2:

Identify all transients in LRA Table 4.3.1-2 that will result in a scheduled or unscheduled start of the EDGs.

Identify any additional transients, beyond those that are listed In LRA Table 4.3.1-2, that can result in a scheduled or unscheduled start of the EDG and provide the 60-year projections, consistent with LRA Table 4.3.1-3.

Clarify whether the 60-year projection of the applicable EDG scheduled and unscheduled start transients and activities is performed on a cumulative or individual transient projection basis. If it is the latter basis, justify why the analysis did not perform the

projections using a separate acceptance limit for each of the transient or activity that could result in a scheduled or an unscheduled start of the EDGs.

NextEra Energy Seabrook Response:

1. The Emergency Diesel Generators were included as a TLAA primarily because the assumed number of temperature cycles was based on a 40 year period. The original design calculation related to transients on the Emergency Diesel Generators, identified thermal cycling as the specific design issue but did not specifically identify an associated aging effect. As thermal cycling in of itself can have a detrimental effect on components, NextEra Energy Seabrook conservatively classified this calculation as a TLAA within the application to verify that the assumptions in the original calculation will remain valid during the period of extended operation.

   The Emergency Diesel Generators are active components within the scope of License Renewal, and in accordance with 10 CFR 54.21(a)(1)(i) do not require aging management review.

2. Transients identified in LRA Table 4.3.1-2 that may result in the unscheduled start of the Emergency Diesel Generator are Loss of Load without immediate trip and Loss of all offsite power. These transients have a NSSS Design Value as specified in the UFSAR of 80 and 40 respectively and a sixty year projection of occurrence of seven (7) cycles each. The additional transients that were considered in the original design calculation were EDG system hydrostatic tests at five (5) cycles and ambient temperature cycling of one cycle per year. The cumulative scheduled and unscheduled operation for the Emergency Diesel Generator is conservatively estimated at approximately 2000 cycles over sixty years of operation as described in LRA section 4.7.14. As the number of temperature cycles assumed in the design exceeds the predicted number of cycles for 60 years, the analysis remains valid for the period of extended operation.

Request for Additional Information (RAI) 4.3-1

Background:

LRA Section 4.3 states that the metal fatigue TLAAs that are evaluated in the LRA fall into the following three categories:

1. Explicit fatigue analyses for nuclear steam supply system (NSSS) pressure vessels and components prepared in accordance with ASME Section III, Class A or Class 1 rules developed as <u>part of the original design</u>.

2. Supplemental explicit fatigue analyses for piping and components that were prepared in accordance with ASIVIE Section III rules to evaluate transients that were identified after the original design analyses were completed, such as pressurizer surge line thermal stratification, and also include reactor vessel internal component fatigue analyses.

3. New fatigue analyses (also in accordance with ASME Section III, Class 1 rules) prepared for license renewal to evaluate the effects of the reactor water environment on the sample of high fatigue locations applicable to newer vintage Westinghouse Plants, as identified in Section 5.5 of NUREG/CR-6260, and using the methodology presented in LRA Section 4.3.4.

LRA Section 4.3.1 states that the most limiting numbers of transients used in these component analyses are given in LRA Table 4.3.1-2 (also listed in FSAR Table 3.9(N)-1), and those numbers are considered to be design limits.

Issue:

The LRA does not provide a list of reactor coolant system (RCS) locations for which fatigue CUF analyses were performed in the CLB, or the CUF value of record for these locations. In particular, the LRA does not provide any CUF values for the NSSS pressure vessel and components (Section 4.3.1), ASIVIE Section III Class 1 piping and components (Section 4.3.2) and reactor vessel internals (Section 4.3.3). Without these values, the staff cannot ascertain whether the CUF for any location exceeded the allowable limit or evaluate the applicant's dispositions of these TLAA in accordance with 10 CFR 54.21 (c).

The staff noted that FSAR Table 3.9(B)-21 provides a CUF value of 0.95 for the ASME Section III, Class 1 RCS pressurizer safety and relief valve system. LRA Table 3.1.2-1 states that for "Valve Body (Class 1)", TLAA is used to manage the aging effect of cumulative fatigue damage. However, LRA Section 4.3 did not provide any details of fatigue analyses for RCS Class 1 valves. It is not clear to the staff how the TLAA of all Class 1 valves were dispositioned in accordance with 10 CFR 54.21 (c).

Request:

1. Provide the original design basis 40-year CUF values and projected 60-year CUF values for all components and/or critical locations that are applicable to the dispositions in LRA Sections 4.3.1, 4.3.2, and 4.3.3. Justify that TLAA disposition associated with the aging effect of cumulative fatigue damage in accordance with 10 CFR 54.21 (c)(1) is appropriate.

2. Clarify and justify the disposition of all Class 1 valves that are TLAAs in accordance with 10 CFR 54.21 (c).

3. Clarify whether the fatigue analyses as part of the original design or supplemental fatigue analyses included Class 1 valves. If RCS Class 1 valves were included, provide the CUF value of record for the valves, the design transients and the number of cycles assumed in the fatigue analyses and justify how the TLAA associated with the aging effect of cumulative fatigue damage of Class 1 valves will be dispositioned in accordance with 10 CFR 54.21(c)(1). If RCS Class 1 valves were not included, clarify why they were excluded and justify how age-related degradation of these RCS Class 1 valves will be managed during the period of extended operation.

NextEra Energy Seabrook Response:

The original design basis 40-yr CUF values for all components and/or critical locations that are applicable to the dispositions in LRA Sections 4.3.1, 4.3.2, and 4.3.3 are provided in Table 1.

Evaluation of ASME Class 1 valves was considered in the original stress and fatigue analysis of the Class 1 piping for Seabrook Station. Fatigue conformance of these valves was demonstrated through the performance of an umbrella fatigue analysis for the piping system containing the valves. In the fatigue analyses, allowable moment ranges were developed for all transient loading combinations so that the ASME Section III, Subsection NB-3650, Equation 12 expansion stress requirement is met and CUF is less than 1.0. Then actual computed moment ranges for each line are compared to the allowable moment range for all significant transient combinations (transients which give a usage factor greater than or equal to 0.02) the line can experience. If the calculated moment range is less than the allowable moment range for each transient combination, then the cumulative usage factor is less than 1.0 and Equation 12 is met. The Equation 13 stress range is also computed, and if shown acceptable, fatigue conformance of the analyzed valves is demonstrated. If one or more allowable moment ranges is exceeded by the actual moment range for the given transient conditions, a more detailed fatigue analysis would be performed and a unique cumulative usage factor would be reported for that valve. A search by NextEra Energy Seabrook did not find any Class 1 valves with separately computed cumulative usage factors since the original stress and fatigue analysis was performed. Thus, it can only be stated that the Class 1 valves achieved fatigue usage values less than 1.0 for all analyzed transients.

All design-basis plant transients listed in Table 4.3.1-2 were considered in these umbrella fatigue analyses in terms of severity and number of occurrences.

Because it has been projected that the design-basis number of design transients will not be exceeded during the 60-year period of extended operation, analyses for these components will be dispositioned in accordance with 10 CFR 54.21(c)(1).

Table 1 List of Fatigue Usage Values

Component	Location	Design Fatigue Usage
RPV	Outlet Nozzle	0.1077
RPV	Outlet Nozzle Vessel Support Pad	0.0211
RPV	Inlet Nozzle	0.0795
RPV	Inlet Nozzle Vessel Support Pad	0.027
RPV	Head Flange	0.0155
RPV	Vessel Flange	0.0196
RPV	Closure Studs	0.4780
RPV	Vessel Wall Transition	0.0105
RPV	Bottom Head-to-Shell Juncture	0.0070
RPV	CRDM Housings	0.1093
RPV	Bottom Head Instrument Tubes (pos. 1)	0.0014
RPV	Bottom Head Instrument Tubes (pos. 2)	0.3184
RPV	Core Support Lugs	0.0627
RPV	Head Adapter Lugs	0.0036
Internals	Lower Support Columns	0.271
Internals	Core Barrel Nozzle	0.410
Internals	Lower Core Plate	0.0744
Internals	Upper Core Plate	0.183
Pressurizer	Valve Support Bracket	0.102
Pressurizer	Surge Nozzle (Path6A, Inside) (3)	0.6325
Pressurizer	Spray Nozzle (Path9) (3)	0.957
Pressurizer	Safety/Relief Nozzle (Pipe) (3)	0.0030
Pressurizer	Lower Head	0.116
Pressurizer	Heater Well	0.128
Pressurizer	Upper Head/Upper Shell	0.906
Pressurizer	Lower Head/Support Skirt	0.736
Pressurizer	Manway	0.875
Pressurizer	Instrument Nozzle	0.166
Pressurizer	Immersion Heater	0.122
Pressurizer	Trunnion/Shell Buildup	0.063
S/G	Divider Plate	0.997
S/G	Tubesheet and Shell Junction	0.846
S/G	Tube to Tubesheet Weld	0.459
S/G	Tubes	0.902
S/G	Main Feedwater Nozzle	0.921
Piping	10-in x 10-in x 10-in Tee in Accumulator Line	0.470
Piping	Charging Piping Valve End	0.440

Component	Location	Design Fatigue Usage
Piping	Pressurizer Spray Line (2)	0.990
Piping	2-inch Crossover Leg Drain Line	0.819
Piping	3/4-inch Bosses (pressure taps, etc.) All Loops	0.81
Piping	3/4-inch Hot Leg Sampling Connection	0.98
Nozzle	14-inch Hot Leg Surge Nozzle (1)	0.6
Nozzle	4-inch Cold Leg Pressurizer Spray Nozzles	0.4
Nozzle	2-1/2-inch Hot and Cold Leg Thermowells	0.81
Nozzle	3-inch Cold Leg Loop 1 Chaging Nozzle	0.99
Nozzle	6-inch SIS Loops 2 and 3 Hot Leg Nozzle	0.01
Nozzle	3-inch Cold Leg (All Loops) Boron Injection Nozzle	0.99
Nozzle	10-inch Cold Leg Accumulator Nozzle (All Loops)	0.95
Nozzle	1-inch Cold Leg Loop 3 Excess Letdown	0.99
Nozzle	3-inch Crossover Leg Normal Letdown Nozzle	0.20
Nozzle	1-inch Hot Leg RTD	0.60
Nozzle	2-inch Cold Leg RTD	0.70
Nozzle	3-inch Crossover Leg Return RTD	0.40
Nozzle	2-inch Crossover Leg Loops 1, 2, 4 Drain	0.116
Nozzle	12-inch Hot Leg RHR Nozzle	0.92
Valves	Class 1 Systems	< 1.0

Notes for Table 1:

(1) The highest reported fatigue usage of 0.6 is at the Reactor Coolant Loop Nozzle Transition and Safe End

(2) 6-in x 4-in reducer, the most limiting location in the Pressurizer Spray lines

(3) Usage taken from most limiting location in the corresponding stress report

Request for Additional Information (RAI) 4.3.2-1

Background:

LRA Section 4.3.2.2 provides the TLAA fatigue assessment of the Seabrook Station, Unit 1 (Seabrook), Pressurizer Surge Line (PSL), Pressurizer Surge Nozzle (PSN), and Hot Leg Surge Line Nozzle (HLSN) subject to thermal stratification/striping in addition to the original design transients.

The applicant concludes that the fatigue analyses (without environmental effects) remain valid for the period of extended operation for the PSL, PSN, and HLSN, in accordance with 10 CFR 54.21(c)(1)(i).

Issue:

LRA Section 4.3.2.2 states that the PSL piping was previously evaluated for the effects of thermal stratification and plant-specific transients in 1990, and it was determined that the PSL will remain within the ASME Code requirements for the design life of the unit. However, no further details of this analysis were provided in the LRA, therefore the staff is not able to verify these statements and the applicability of thermal stratification during the extended period of operation. The staff is not able to confirm the applicant's conclusion and disposition for the TLAAs of these Class 1 RCS components.

LRA Section 4.3.2.2 states that as the evaluation of the structural weld overlay applied to the PSN included an elastic-plastic formulation and resulted in CUF less than 1.0 at the PSN. The staff was not able to verify if the elastic-plastic analyses provided the appropriate reduction of conservatism in prior evaluations of structural weld overlay as approved corrective action.

Request

1. Provide the current CUF values of record, without environmental effects, for all the components and/or critical locations that are applicable to LRA Section 4.3.2.2, including the PSL and the hot leg surge line nozzle safe-end. Provide the corresponding CUF values from the original design basis analyses, and from the updated analyses for a projected 60-year operation.

2. Clarify how the elastic-plastic formulation was used in the evaluation and how the elastic-plastic analyses provided appropriate reduction of conservatism existed in previous evaluations of structural weld overlay.

3. Justify the conclusion that the analyses for the pressurizer surge line, pressurizer surge nozzle and hot leg surge line Nozzle remains valid for the period of extended operation, is appropriate for these components. As part of the justification, provide sufficient details, including the type, severity and number of

transients, used 1) in the original analysis for design life; 2) in the modified or updated analysis for thermal stratification/striping events; and 3) for the extended period of operation, for the PSL piping, the hot leg surge line nozzle safe-end and the hot-leg surge nozzle-to-pipe weld.

NextEra Energy Seabrook Response:

1. The current CUF values of record, without environmental effects, for all the components and/or critical locations that are applicable to LRA Section 4.3.2.2, including the PSL and the hot leg surge line nozzle safe-end are provided in Table 2. Seabrook Station commenced commercial operation in March 1990. At that time, in response to IEB 88-11, thermal stratification loadings were included in the analyses of record. These analyses are considered to be the original analyses of record. The CUF values for these original design basis analyses, for subsequent analyses performed to support license renewal and weld overlay repairs, and for the updated analyses for projected 60-year operation are also provided in Table 2.

Table 2 Fatigue Usage for Surge Line Components

Component	Original CUF (including thermal stratification)	Updated CUF	
		Design CUF (9)	60 Year
Surge Line	0.6 (1)(3)	0.6 (4)	0.6 (8)
Hot Leg Surge Nozzle Safe-End -to-Pipe Weld	0.6 (2)(3)	0.52 (5)	0.2844 (7)
Pressurizer Surge Nozzle Safe-End	0.4 (3)	0.6325 (6)	0.6325 (8)

Footnotes for Table 2:

(1) WCAP-12305, r.0, Evaluation of Thermal Stratification for the Seabrook Unit 1 Pressurizer Surge Line, June 1989
(2) WCAP-11144, r.1, ASME Section III Analysis of Reactor Coolant Loop Branch Nozzles for the Seabrook Nuclear Power Plant Unit 1, April 1990
(3) WCAP-9936, r. 2, ASME Section III Class 1 Piping Stress Analysis for Seabrook Nuclear Generating Station Unit 1, April 1990
(4) WCAP-16255-P, r.1, Seabrook Station Stretch Power Uprate Project, January 2005
(5) SI Calculation 0801125.309, r. 0, Hot Leg Surge Nozzle Fatigue Analysis, July 2009
(6) Areva Stress Report 32-9059188, r.2, Seabrook Pressurizer Surge Nozzle Weld Overlay Stress Analysis, March 2008. Location is inside surface of safe-end. The CUF was computed as if the WOL was originally installed. Because the WOL results in increased secondary stress due to thermal gradients and added discontinuities, the resulting design-life CUF is conservatively higher than if the CUF was partitioned into the pre-WOL and post-WOL time periods.
(7) SI Calculation 0801125.321, r. 0, Hot Leg Surge Nozzle Environmentally-Assisted Fatigue (EAF) Analysis Using Baseline Number of Cycles and 60-Year Number of Cycles, December 2009
(8) The design number and severity of transients and resulting CUF is projected to be maintained for the 60-year period of extended operation.
(9) Design CUF – component analyzed for design-basis number of design-basis severity transients.

2. A weld overlay repair was installed on the pressurizer surge nozzle in 2008. A simplified elastic-plastic evaluation was initially performed, resulting in a maximum CUF of 4.77 at the safe-end. A non-linear elastic-plastic analysis of the most severe thermal transient was then performed for this and several other sections. The maximum CUF was determined to be 0.6325 at the safe-end. The reduction in conservatism was appropriate because the analysis showed that shakedown occurred within 10 evaluated loading cycles, as required in the rules of ASME Section III Subsection NB-3228.4.

3. The hot leg surge nozzle safe-end–to pipe weld was determined to be the highest CUF in the surge line (see Table 1). Thus, it was considered to be the bounding component in the surge line. An acceptable hot leg surge nozzle safe-end CUF value of 0.9 can be demonstrated by multiplying the design-basis CUF of 0.6 by a factor 1.5. The disposition of 10 CFR 54.21(c)(1)(i) is thus demonstrated.

   For each of the evaluations [1) original, 2) updated for thermal stratification and 3) extended period of operation], analytical transients were developed both on the basis of the transients listed in LRA Table 4.3.1-2 and the thermal stratification transients taken from WCAP-12305, "Evaluation of Thermal Stratification for the Seabrook Unit 1 Pressurizer Surge Line," June 1989." The thermal stratification transients were indexed to the RCS Heatups and RCS Cooldowns.

Request for Additional Information (RAI) 4.3.3-1

Background:

LRA Section 4.3.3 states that for assuring continued functionality of the reactor vessel internals during the desired operating period, including license renewal, it is essential to demonstrate that the effects of aging are adequately managed. The applicant stated that the EPRI "Materials Reliability Program (MRP) Reactor Internals Inspection and Evaluation Guidelines," MRP-227, is intended to support that demonstration. The LRA further states that the PWR Vessel Internals Program will manage the aging effects including changes in dimensions, cracking, loss of fracture toughness, and loss of preload of the reactor vessel internals components for the period of extended operation per 10 CFR 54.21 (c}(1)(iii).

The Standard Review Plan-License Renewal (SRP-LR) Section 4.3.1.1.1 states that ASME Class 1 components, which include core support structures, are analyzed for metal fatigue. and ASME Section III requires a fatigue analysis for Class 1 components that considers all transient loads based on the anticipated number of transients. SRP-LR Section 4.3.2.1.1.3 states that in Chapter X of the Generic Aging Lessons Learned

(GALL) Report, the staff has evaluated a program for monitoring and tracking the number of critical thermal and pressure transients for the selected reactor coolant system components. The staff has determined that this program is an acceptable aging management program (AMP) to address metal fatigue of the reactor coolant system components according to 10 CFR 54.21 (c)(1)(iii).

Issue

The Fatigue Monitoring Program is the only option recommended in the GALL Report to manage the aging effects of metal fatigue, and any other option such as a comprehensive inspection and flaw tolerance evaluation program based on the EPRI report MRP-227 guidelines needs to be evaluated on a case-by-case basis. The staff noted that the EPRI report MRP-227 has not been approved by the NRC.

To disposition fatigue TLAA for reactor core internals in accordance with 10 CFR 54.21(c)(1)(iii), an acceptable inspection/flaw tolerance evaluation program should at least include the following elements:

1. Fatigue CUF analysis of all fatigue sensitive reactor internals components to identify the fatigue limiting locations. The fatigue sensitive locations should include upper and lower core plates, baffle-former bolts, core barrel outlet nozzle weld, thermal shield flexures, control rod guide tube (lower flange and support pins), upper support ring or skirt, and any other plant-specific fatigue sensitive component.
2. Comprehensive inspection program that ensures (a) all the fatigue sensitive locations identified in the CUF analyses can be inspected and (b) the inspection techniques are adequate to detect fatigue cracks at all of those locations.
3. Postulated flaw tolerance evaluation to establish acceptable inspection interval. Since neutron irradiation has a significant effect on fracture toughness and crack growth rates of austenitic stainless steels in pressurized water reactor (PWR) environments, an acceptable flaw tolerance evaluation should include: (a) end-of-life neutron fluence for all locations identified in item 1 above, and estimates of reduction in fracture toughness corresponding to those fluence levels, and (b) acceptable crack growth rates for irradiated materials in PWR coolant environments under both corrosion fatigue and stress corrosion cracking conditions.

It is not clear that Seabrook's proposed inspection program can ensure detection of cracks at fatigue sensitive locations, and whether all fatigue locations in the vessel internals components can be inspected.

Request:

1. If the fatigue TLAAs for reactor core internals are to be dispositioned in accordance with the criterion of 10 CFR 54.21 (c)(1)(iii) using proposed AMP other than the GALL AMP X.M1, provide a comprehensive inspection and postulated flaw tolerance evaluation program that includes at least the three elements discussed above. Justify that the proposed AMP can adequately manage the aging effect of metal fatigue for the reactor vessel internals during the period of extended operation.
2. If the fatigue TLAAs for reactor core internals are to be dispositioned using the Metal Fatigue Of Reactor Coolant Pressure Boundary in accordance with 10 CFR 54.21 (c)(1)(iii), or in accordance with either 10 CFR 54.21(c)(1)(i) or 10 CFR 54.21 (c)(1)(ii), provide the updated CUFs for the period of extended operation for the reactor internals components for which there is a fatigue CUF of record and justify the proposed disposition.

NextEra Energy Seabrook Response:

The intent of the fatigue management program is to disposition fatigue of the vessel internals using 10 CFR 54.21 (c)(1)(i); that is, applying results of supplemental fatigue analyses to demonstrate continued acceptance of the components. In order to confirm these analyses for the extended license period, both generic and plant-specific analyses have been used.

1. CUF values have not been calculated for the vessel internals as part of the original design basis. However, generic analyses of Westinghouse-designed internals components have shown that the fatigue usage factors of the internals components are low and the number fatigue sensitive locations is limited[1] (WCAP-14577, R1-A, and MRP-191). In addition, a plant-specific fatigue analyses for the limiting vessel internals locations has been performed for the Seabrook plant during power uprate, and from this analysis, the Seabrook plant limiting fatigue locations are: Lower Support Columns, Core Barrel Nozzle, Lower Core Plate and Upper Core Plate. The effects of fatigue on these limiting locations will be monitored by cycle counting under the Seabrook Station Fatigue Monitoring Program during the period of extended operation to verify that the number of design cycles assumed in the analyses will not be exceeded..

[1] Potential fatigue-sensitive locations for extended plant life are: lower core plate, lower support plate, radial key weld, core barrel nozzle weld, baffle/barrel former bolts, guide tubes/flow downcomers, and upper support plate assembly. The remaining internals components have been excluded because the CUF values are extremely low or the intended function will not be challenged by fatigue.

2. Fatigue evaluations of the critical reactor internal components were performed, which indicated that the structural integrity of the reactor internals is maintained at the SPU conditions (WCAP-16255-P, Rev. 1). Cumulative usage factors were all shown to be less than 1.0 for these the limiting RVI components (Lower Support Columns, Core Barrel Nozzle, Lower Core Plate and Upper Core Plate).The CUF values are as follows:

Summary of Maximum Calculated Usage Factors for the Limiting Seabrook Reactor Internal Components	
Component	***Cumulative Usage Factor***
Lower Support Columns	0.271
Core Barrel Outlet Nozzle	0.410
Lower Core Plate	0.0744
Upper Core Plate	0.183

The Seabrook Station Vessel Internals Program will monitor the effects of aging degradation related mechanisms on the intended function of reactor vessel internals components through one-time, periodic, and conditional examinations, and other aging management program methodologies, as needed, in accordance with the ASME section XI Inservice Inspection, Subsections IWB, IWC, and IWD Program and MRP-227. This program will be credited for managing aging effects of the vessel internals. The aging management methodologies will include visual examinations, surface examinations, volumetric examinations, and physical measurements. An inspection plan for Reactor Vessel Internals will be submitted for NRC review and approval at least twenty four months prior to entering the period of extended operation in accordance with Commitment #1.

Furthermore, the Seabrook Station Vessel Internals Program states that, as a part of its corrective actions, "all indications will be evaluated per the acceptance criteria. Unacceptable indications will be corrected through implementation of appropriate repair or replacement activities". It also states that, "Indications noted will be entered into the Seabrook corrective action program for appropriate disposition. A repair, replacement, or evaluation will be performed for all flaws that exceed the acceptance standards. Additional guidance for disposition of unacceptable conditions for reactor vessel internals will be found in the ASME Code, Section XI; in MRP-227 Guidelines; and in reports referenced therein or demonstrated through an appropriate technical justification. MRP-227 provides information on methodology that will be used for the evaluation of detected conditions that exceed the examination acceptance criteria. The flaw evaluation methodology accounts for the accumulated neutron exposure and the resulting loss of fracture toughness due to radiation embrittlement in assessing the susceptibility of the component for

continued service.

Request for Additional Information (RAI) 4.3.3-2

Background:

In LRA Table 3.1.2-3, the applicant indicated that a TLAA disposition is used for the flux thimbles tube and flux thimble guide tubes for the aging effect of cumulative fatigue damage.

Issue:

LRA Section 4.3.3, did not provide the CUF values for the flux thimble tubes and flux thimble guide tubes to support the disposition of the TLAA in accordance with 10 CFR 54.21 (c)(1)(iii).

Request:

Provide. the CUF values for the flux thimble tubes and flux thimble guide tubes and justify that the aging effect of cumulative fatigue damage of the flux thimble tubes and flux thimble guide tubes will be adequately managed by the PWR Vessel Internal Program in accordance with 10 CFR 54.21(c)(1)(iii).

NextEra Energy Seabrook Response:

The Seabrook Station Flux Thimble Tubes are not within the scope of License Renewal. LRA Table 3.1.2-3 has been revised in response to RAI 3.1.1.60-2.

The Flux Thimble Guide Tubes are internal to the reactor vessel for structural support of the flux thimble tubes. The Flux Thimble Guide Tubes do not provide a pressure boundary function and have no associated fatigue analysis. Table 3.1.2-3 incorrectly listed Cumulative Fatigue Damage as an aging effect requiring management. LRA table 3.1.2-3 Line 2 as shown on page 3.1-86 should be deleted as shown.

~~Flux Thimble Guide Tubes~~	~~Structural Support~~	~~Stainless Steel~~	~~Reactor Coolant~~	~~Cumulative Fatigue Damage~~	~~TLAA~~	~~IV.B2-31 (R-53)~~	~~3.1.1-5~~	~~A~~

Reactor Vessel Bottom Instrument Tubes (a/k/a Bottom Head Instrument Tubes) are ASME Class 1 components associated with the Reactor Pressure Vessel (LRA Table 3.1.1-2) with a CUF value of 0.3184. As discussed in LRA section 4.3.1 for NSSS Class 1 components, the 40-year design transients bound the numbers of cycles projected to

occur during 60 years of plant operations at Seabrook Station. Therefore, the NSSS Class 1 fatigue analyses that are based upon the 40-year design transients remain valid for the period of extended operation in accordance with 10 CFR 54.21(c)(1)(i).

The aging effect of cumulative fatigue damage of the Reactor Vessel Bottom Instrument Tubes will be monitored by cycle counting by the Metal Fatigue of the Reactor Coolant System Pressure Boundary Program.

The Reactor Vessel Internals discussed in section 4.3 will be managed by the PWR Vessel Internals Program, B.2.1.7 including changes in dimensions, cracking, loss of fracture toughness, and loss of preload of the Reactor Vessel Internals components for the period of extended operation per 10 CFR 54.21(c)(1)(iii). The Reactor Vessel Internals program will be submitted to the NRC at least two years prior to the period of extended operation in accordance with Commitment 1.

Request for Additional Information (RAI) 4.3.4-1

Background:

In LRA Section 4.3.4, the applicant discussed the methodology to determine the locations that require environmentally assisted fatigue analyses consistent with NUREG/CR-6260 "Application of NUREG/CR-5999 Interim Fatigue Curves to Selected Nuclear Power Plant Components." The staff recognized that, in LRA Table 4.3.4-1, there are seven plant-specific locations listed based on the six generic components identified in NUREG/CR-6260. Footnote 2 of Table 4.3.4-1 indicated that the plant-specific locations listed are the limiting location within the boundary of the applicable NUREG/CR-6260 component.

Issue:

The GALL Report AMP X.M1, "Metal Fatigue of Reactor Coolant Pressure Boundary" states that the impact of the reactor coolant environment on a sample of critical components should include the locations identified in NUREG/CR-6260 as a minimum, and that additional locations may be needed. During its review, the staff recognized that in footnote 2 of Table 4.3.4-1, the applicant stated that these locations are plant-specific limiting locations within the boundary of the applicable NUREG/CR-6260 component. However, CUF values for other locations were not available in the LRA and the applicant did not provide any justification that these are the limiting locations. Furthermore, the staff noted that the applicant's plant-specific configuration may contain locations that should be analyzed for the effects of the reactor coolant environment other than those identified in NUREG/CR-6260. This may include locations that are limiting or bounding for a particular plant-specific configuration, or that have calculated CUF values that are greater when compared to the locations identified in NUREG/CR-6260.

The staff noted that LRA Section 4.3.2.2 stated that the controlling fatigue location was the hot leg surge line nozzle safe-end. However, footnote 2 in LRA Table 4.3.4-1 indicates the hot-leg surge nozzle-to-pipe weld to be the plant-specific limiting location within the boundary of the applicable NUREG/CR-6260 component location.

The staff also noted that for some RCS locations, the projected 60-y transient cycles yield CUFs that are higher than the design limit of 1.0. Consequently, the transient cycle limit when the CUF for a specific location exceeds 1.0 would vary for the high fatigue usage locations.

Request:

1. Provide the 40-year design CUF value and the projected 60-year CUF values (with and without environmental effect) for the hot leg surge line nozzle safe-end. Justify that the hot-leg surge nozzle-to-pipe weld is the limiting location for the pressurizer surge line.

2. Justify that the plant-specific locations listed in LRA Table 4.3.4-1 are bounding for the generic NUREG/CR-6260 components.

3. Confirm and justify that the locations selected for environmentally assisted fatigue analyses in LRA Table 4.3.4-1 consist of the most limiting locations for the plant (beyond the generic components identified in the NUREG/CR-6260 guidance). If these locations are not bounding, clarify the locations that require an environmentally assisted fatigue analysis and the actions that will be taken for these additional locations. If the limiting location identified consists of nickel alloy, state whether the methodology used to perform the environmentally-assisted fatigue calculation for nickel alloy is consistent with NUREG/CR-6909. If not, justify the method chosen.

NextEra Energy Seabrook Response:

1. The 40-year design CUF is 0.6. To support the license renewal application, NextEra Seabrook has produced a new analysis. Using design-basis numbers of design-severity cycles, the new analysis produced a 40-year design CUF value for the hot leg surge nozzle safe-end of 0.52 and a 40-year CUF_{en} value of 6.63. Because the 60-year cycles are projected to be bounded by the design-basis number of cycles, the 60-year projected CUF value for the hot leg surge nozzle end is 0.52 and the 60-year projected CUF_{en} is 6.63.

   As shown in Table 4.3.4-1, using the 60-year projected number of design-severity cycles, the 60-year CUF for the hot leg surge nozzle safe-end is 0.2844 and the 60-year CUF_{en} is 3.2848. In accordance with License Renewal Commitment Number 44, at least two years prior to entering into the period of extended

operation, NextEra Seabrook will update the fatigue usage calculations for the hot leg surge nozzle accounting for the effects of environment using refined fatigue analyses, if necessary, to determine acceptable CUF_{en} (i.e., less than 1.0).

The hot leg surge nozzle-to-pipe weld was evaluated to be the limiting component in the surge line, because it was reported to be the highest CUF in the surge line in the original analysis.

2 & 3. Consistent with the requirement of License Renewal Commitment Number 44; NextEra Seabrook will perform a review of design basis ASME Class 1 component fatigue evaluations to determine whether the NUREG/CR-6260-based components that have been evaluated for the effects of the reactor coolant environment on fatigue usage are the limiting components for the Seabrook plant configuration. If more limiting components are identified, the most limiting component will be evaluated for the effects of the reactor coolant environment on fatigue usage. If the limiting location identified consists of nickel alloy, the environmentally-assisted fatigue calculation for nickel alloy will be performed using the rules of NUREG/CR-6909. This additional evaluation will be performed through the Metal Fatigue of Reactor Coolant Pressure Boundary Program in accordance with 10 CFR 54.21 (c)(1)(iii).

This evaluation is consistent with License Renewal Commitment Number 44. Commitment 44 is modified as follows to reflect the use of NUREG/CR-6909 for determining the environmentally-assisted fatigue calculation for nickel alloy material locations and identification of the limiting components for the Seabrook plant configuration.

Based on the above discussion, the following change has been made to the Seabrook Station License Renewal Application:

1. In Appendix A, on page A-42, Commitment List A.3, item #44 is revised as follows:

44.	Environmentally-Assisted Fatigue Analyses (TLAA)	***NextEra Seabrook will perform a review of design basis ASME Class 1 component fatigue evaluations to determine whether the NUREG/CR-6260-based components that have been evaluated for the effects of the reactor coolant environment on fatigue usage are the limiting components for the Seabrook plant configuration. If more limiting components are identified, the most limiting component will be evaluated for the effects of the reactor coolant environment on fatigue usage. If the limiting location identified consists of nickel alloy, the environmentally-***	A.2.4.2.3	At least two years prior to entering the period of extended operation.

		assisted fatigue calculation for nickel alloy will be performed using the rules of NUREG/CR-6909. (1) Consistent with the Metal Fatigue of Reactor Coolant Pressure Boundary Program Seabrook Station will update the fatigue usage calculations using refined fatigue analyses, if necessary, to determine acceptable CUFs (i.e., less than 1.0) when accounting for the effects of the reactor water environment. This includes applying the appropriate F_{en} factors to valid CUFs determined from an existing fatigue analysis valid for the period of extended operation or from an analysis using an NRC-approved version of the ASME code or NRC-approved alternative (e.g., NRC-approved code case). (2) If acceptable CUFs cannot be demonstrated for all the selected locations, then additional plant-specific locations will be evaluated. For the additional plant-specific locations, if CUF, including environmental effects is greater than 1.0, then Corrective Actions will be initiated, in accordance with the Metal Fatigue of Reactor Coolant Pressure Boundary Program, B.2.3.1. Corrective Actions will include inspection, repair, or replacement of the affected locations before exceeding a CUF of 1.0 or the effects of fatigue will be managed by an inspection program that has been reviewed and approved by the NRC (e.g., periodic non-destructive examination of the affected locations at inspection intervals to be determined by a method accepted by the NRC).		

Request for Additional Information (RAI) 4.3.4-2

Background:

LRA Section 4.3.4 states that based on NUREG/CR-6260, plant-specific components were identified and the design ASME fatigue usage factors were adjusted by the environmentally assisted fatigue factors (F_{en}) to obtain the environmentally-assisted fatigue CUFs for the reactor vessel inlet and outlet nozzles, reactor vessel shell and lower head and RHR hot leg nozzle. The results for a 60-year operation are summarized in LRA Table 4.3.4-1. LRA Section 4.3.4 states that for the reactor vessel shell and lower head and reactor vessel inlet and outlet nozzles the CUFs were determined using the number and severity of the design cycles of record, which bound the projected 60-year cycles. For these components, the environmental fatigue effects were determined using the maximum F_{en}, i.e., the slowest strain rate. The temperature is >200°C and dissolved oxygen is <50 ppb. The applicant further stated that for the remainder NUREG/CR-6260 locations, i.e., pressurizer surge line nozzle, charging nozzle, . safety injection nozzle, and residual heat removal (RHR) system Class 1 piping, the CUFs were determined using the projected 60-

year cycles and environmental effects were incorporated using an effective F_{en}, which was determined with a temperature of >200°C, dissolved oxygen <50 ppb, and the strain rate calculated by the integrated strain rate method from EPRI Report MRP-47, Rev. 1. LRA Section 4.3.4 states that the fatigue analyses indicate that the 60-year CUF in air for all locations is less than the ASME design limit of 1.0. However, the 60-year CUF adjusted for environmental effects is greater than 1.0 for the hot-leg surge line nozzle and the charging nozzle.

Issue:

LRA Subsection 4.3.4 does not provide sufficient details on how the CUFs in air and the associated values of environmental fatigue F_{en}, were determined for the NUREG/CR-6260 locations listed in Table 4.3.4-1. It is not clear whether all design transients were lumped into the worst-case transient or other transients were also considered in the fatigue analyses.

In addition, it is not clear to the staff whether the CUF analysis for the RHR system Class 1 piping was performed using plant-specific 60-year projected cycles or using the design number and severity cycles. The "Disposition" subsection of LRA Section 4.3.4 states that the RHR system Class 1 piping analysis was based on Seabrook Station specific conditions, whereas footnote 4 of Table 4.3.4-1 states that this analysis was performed using a design number and design-severity cycles.

Request:

1. For each location listed in LRA Table 4.3.4-1, clarify whether the 60-year ASME Air-Curve CUF were calculated using ASME Code Section III NB-3200 or NB-3600.

2. For fatigue calculation using the integrated strain-rate method, describe how the transient definitions (i.e., stress vs. time curves) are selected. Justify the use of the integrated strain-rate method in the fatigue calculation and that it provides conservative results. Clarify whether some transients, all transients, or the worst-case transient (with some of the transients being lumped into) were used.

3. Clarify what the Seabrook Station specific conditions as discussed in the "Disposition" subsection of LRA Section 4.3.4 are. Clarify whether the CUF analysis for the RHR system Class 1 piping was performed using Seabrook Station specific conditions, or using the design number and severity cycles as noted in footnote 4 of Table 4.3.4-1.

NextEra Energy Seabrook Response:

1. The 60-year ASME Air-Curve CUF values for all of the components listed in Table

4.3.4-1 were calculated using ASME Code Section III Subsection NB-3200.

2. In the integrated strain-rate method described in EPRI document MRP-47, Revision 1, the F_{en} factor is computed at multiple points over the increasing (tensile) portion of a paired strain range, and an overall F_{en} is integrated over the entire tensile portion of the strain range (i.e., from the algebraically lowest stress point of the maximum compressive stress event to the algebraically highest stress point of the maximum tensile stress event). MRP-47 uses the same F_{en} equations as those shown in NUREG/CR-5704 for austenitic stainless steels and NUREG/CR-6583 for carbon steels and low-alloy steels. The MRP-47 integrated strain rate approach discussed above is similar to the approach used in NUREG/CR-6909.

   MRP-47, Revision 1 provides a technical basis prepared from NRC, NRC contractor, EPRI, and other industry participants to provide a more unified and consistent approach to determining F_{en} values throughout the industry. The acceptable use of MRP-47 to perform the F_{en} calculations is presented above. Therefore, the resulting F_{en} -adjusted CUF are acceptable representative values for the assessments. In each evaluation, all specified transients were analyzed.

3. The meaning of the term "Seabrook Station specific conditions" is the 60-year projected number of cycles and design-severity cycles. The RHR system Class 1 piping evaluation was not performed using Seabrook Station specific conditions, but with the design number and design severity cycles as noted in footnote 4 of Table 4.3.4-1.

Request for Additional Information (RAI) 4.3.5-1

Background:

LRA Section 4.3.5 summarizes the TLAA for steam generator tubing associated with loss of material due to wear at supports and fatigue in the U-bend region, which is the result from flow-induced vibrations. The applicant's disposition for these TLAAs is in accordance with 10 CFR 54.21 (c)(1)(i), that the analyses remain valid for the period of extended operation.

Issue:

The applicant discussed that the maximum 40-year wear is less than 0.0050 inch and the maximum 60-year tube wear will be 0.0075 inch. It appears the applicant applied a factor of 1.5 to the maximum 40-year wear to determine the 60-year wear projection. Furthermore, it appears the TLAA evaluations of tube wall wear are based on results of a 40-year period and linearly extrapolated to 60-year extended period of operation. In this case, the applicant has made at least two assumptions which are: 1) wear and fatigue damage progress linearly with time and 2) the key causative factors or operating conditions, such as the flow pattern and the support gaps, remain unchanged or are

bounded by the analyses. However, over time, due to the wear itself and due to the build-up of corrosion products, or due to intentional operational changes, the flow patterns are likely to change. The applicant did not address or include these considerations in making the extrapolation from a 40-year analysis.

In addition, LRA Section states "Low-cycle fatigue usage for the most limiting tube in the most limiting power-uprated operating condition resulting from the flow-induced vibration tube bending stress is 0.2 ksi." This statement is unclear. It appears to mean that the low-cycle fatigue usage is 0.2 ksi. Fatigue usage, however, is a dimensionless value.

Request:

1. Clarify the methodology that was used to determine the 60-year projection for the tube wear. Provide the technical basis and justify the linear extrapolation and analysis envelop for likely changes in causative factors for the wear and fatigue that are caused by the flow-induced vibrations or fluid-structure interactions during the extended period of operation.

2. Indicate if any independent confirmation has occurred, or if any plan will occur in the future to ensure the validity of the analyses and its adequacy for the period of extended operation. Alternatively, justify the adequacy of these results from this analysis, for the period of extended operation.

3. Considering that fatigue usage is a dimensionless value, clarify the value for the low-cycle fatigue usage and the induced bending stress that is being referenced in LRA Section 4.3.5. Amend the LRA, as applicable, to address this clarification.

NextEra Energy Seabrook Response:

1. A linear tube wall wear rate is considered to be reasonable to determine a 60-year projection for tube wear. As stated in the NRC Safety Evaluation for Amendment No. 101 for the Seabrook Station, Unit No. 1, 5.2% Power Uprate,(Adams Accession No. ML050140453) any projected increase in wear will be detected during routine inspection and will be remediated to maintain tube integrity. This conclusion is valid for the 40 year period which was the subject of the Safety Evaluation or a subsequent period.

2. Confirmation of the validity of the analyses to determine tube wear is provided in the eddy current inspection program described in the Steam Generator Tube Integrity Program (LRA Appendix B.2.1.10). Steam Generator tube inspection scope and frequency, plugging or repair, and leakage monitoring are in accordance with the Seabrook Station Steam Generator Tube Integrity Program implemented in accordance with NEI 97-06. As stated in the As stated in the NRC Safety Evaluation for Amendment No. 101 for the Seabrook Station, Unit

No. 1, 5.2% Power Uprate any increase in wear would progress over many cycles and would be readily observed during routine eddy current inspections.

3. The alternating flow-induced vibration bending stress is 0.2 ksi. Since this value is well below the fatigue endurance limit of 20 ksi, the computed fatigue usage for the flow-induced vibration loading is 0.0. This conclusion is consistent with the conclusions provided in Paragraph 3.6.6.3 (Tube Vibration and Wear) of the NRC Safety Evaluation for Amendment No. 101 for the Seabrook Station, Unit No. 1 5.2% Power Uprate (conclusion was not changed in Paragraph 3.6.3 of NRC Safety Evaluation for Amendment No. 110 for the 1.7% Measurement Uncertainty Power Uprate).

Based on the above discussion, the following change has been made to the Seabrook Station License Renewal Application:

1. Section 4.3.5, pages 4.3-24-25, is revised as follows:

4.3.5 STEAM GENERATOR TUBE, LOSS OF MATERIAL AND FATIGUE USAGE FROM FLOW-INDUCED VIBRATION

Summary Description

The Seabrook Station Model F steam generators were evaluated with respect to flow induced vibration (tube wear and fatigue usage) for the power increases that were implemented as part of the Seabrook Station Power Uprates. The analysis of the effects of steam generator flow-induced vibration on tube wear and fatigue usage assumed 40 years of operation.

Analysis

The maximum predicted tube wall wear for a 40-year operating life was 0.0032 inch for the pre-power uprate conditions. As a result of the 56% increase in the tube wear rate as a result of the power uprates, the maximum 40-year tube wall wear is less than 0.0050 inch. The maximum 60-year tube wall wear is 0.0075 inch (~20% through-wall wear). This amount of tube wall wear is less than the limit of acceptability of 40% of wall thickness and is deemed not to significantly affect tube integrity.

Confirmation of the validity of the analyses to determine tube wear is provided in the eddy current inspection program described in the Steam Generator Tube Integrity Program (LRA Appendix B.2.1.10). Steam Generator tube inspection scope and frequency, plugging or repair, and leakage monitoring are in accordance with the Seabrook Station Steam Generator Tube Integrity Program implemented in accordance with NEI 97-06. As stated in the NRC Safety Evaluation for Amendment No. 101 for

the Seabrook Station, Unit No. 1, 5.2% Power Uprate,(Adams Accession No. ML050140453), any increase in wear would progress over many cycles and would be readily observed during routine eddy current inspections.

The evaluation showed that significant levels of tube vibration will not occur from either the fluidelastic or turbulent mechanisms above those associated with the pre-uprated condition.

Low-cycle fatigue usage for the most limiting tube in the most limiting power-uprated operating condition resulting from the flow-induced vibration tube bending stress is 0.2 ksi. This value is well below the fatigue endurance limit of 20 ksi at 1E+11 cycles, resulting in a computed fatigue usage of 0.0. High-cycle fatigue usage of U-bend tubes was evaluated. One of the prerequisites for high-cycle U-bend fatigue is a dented support condition at the upper plate. Seabrook Station steam generator tube support plates are manufactured from stainless steel therefore there is no potential for the necessary conditions to occur. It was concluded that the support condition leading to a dented support condition necessary for high-cycle fatigue cannot occur in the Model F steam generators.

Disposition

~~**Validation, 10 CFR 54.21(c)(1)(i)** – The analyses remain valid for the period of extended operation.~~

Aging Management, 10 CFR 54.21(c)(1)(iii) – The effects of aging on the intended function(s) will be adequately managed for the period of extended operation by the Steam Generator Tube Integrity Program (B.2.1.10), which manages the aging effects of loss of material due to wall thinning from flow accelerated corrosion of the Steam Generator components.

2. Table 4.1-1 page 4.4-5, is revised as follows:

Table 4.1-1 Time-Limited Aging Analyses Applicable to Seabrook Station

TLAA Category	Description	Disposition Method(s)	LRA Section
2.	**Metal Fatigue Of Piping And Components**		4.3
	Steam Generator Tube, Loss of Material and Fatigue from Flow-Induced Vibration	~~§54.21(c)(1)(i)~~ ***§54.21(c)(1)(iii)***	4.3.5

Request for Additional Information (RAI) 4.3.5-2

Background:

LRA Section 4.3.5 summarizes the TLAA for steam generator tubing associated with loss of material due to wear at supports and fatigue in the U-bend region, which is the result from flow-induced vibrations (FIV). The applicant's disposition for these TLAAs is in accordance with 10 CFR 54.21 (c)(1)(i), that the analyses remain valid for the period of extended operation.

Issue:

LRA Section 4.3 discusses "Metal Fatigue Analysis of Piping and Components", whereas LRA Section 4.3.5 includes loss of material due to wear of tubes from FIV, as a distinct aging effect that is separate from metal fatigue. The staff noted that the first two paragraphs of the "Analysis" subsection relate exclusively to wear. The applicant discussed that the maximum 40-year wear is less than 0.0050 inch and the maximum 60-year tube wear will be 0.0075 inch. The applicant then concluded that the estimated maximum 60-year tube wall wear will be less than the acceptance criteria of 40% of wall thickness. The staff noted that the applicant did not provide the wall thickness of the tube to justify the statements in LRA Section 4.3.5.

Request:

1. Provide the tube wall thickness and demonstrate that the estimated maximum 60-year tube wall wear is under the limit of acceptability of 40% of wall thickness.

2. Justify why the TLAA analysis and disposition associated with tube wall wear should not be included as a stand-alone subsection under LRA Section 4.7 "Plant-specific TLAA," and include it under LRA Table 4.1-1.

NextEra Energy Seabrook Response:

1. The nominal tube wall thickness for 11/16-inch tubing is 0.040 inches. The predicted 60-year tube wall wear of 0.0075 inches is approximately 20% of the nominal tube wall thickness. Plugging is performed when wear equals 40% of nominal tube wall thickness.

   NextEra Seabrook agrees that the TLAA analysis and disposition associated with tube wall wear should be included as a stand-alone subsection under LRA Section 4.7 "Plant-specific TLAA," and include it under LRA Table 4.1-1.

Based on the above discussion, the following changes have been made to the Seabrook Station License Renewal Application:

1. New item added to Table 4.1-1, TLAA Category 6 on page 4.1-6 as follows:

Table 4.1-1 Time-Limited Aging Analyses Applicable to Seabrook Station			
TLAA Category	**Description**	**Disposition Method(s)**	**LRA Section**
	Steam Generator Tube Wall Wear From Flow-Induced Vibration	***§54.21(c)(1)(i)***	***4.7.15***

2. New section 4.7.15 has been added to page 4.7-15 as follows:

4.7.15 STEAM GENERATOR TUBE WALL WEAR FROM FLOW-INDUCED VIBRATION

Summary Description

As previously discussed in Section 4.3.5, the Seabrook Station Model F steam generators were evaluated for tube wear from flow-induced vibration for the 7.4% power increase that was implemented as part of the Seabrook Station Power Uprate. The analysis of the effects of steam generator flow-induced vibration on tube wear assumed 40 years of operation.

Analysis

The maximum predicted tube wall wear for a 40-year operating life was 0.0032 inch for the pre-uprate conditions. As a result of the 56% increase in the tube wear rate as a result of the 7.4% power uprate, the maximum 40-year tube wall wear is less than 0.0050 inch. The maximum 60-year tube wall wear is 0.0075 inch (~20% through-wall wear) based on a linear time projection. This amount of tube wall wear is less than the limit of acceptability of 40% of wall thickness and is deemed not to significantly affect tube integrity.

The evaluation showed that significant levels of tube vibration will not occur from either the fluidelastic or turbulent mechanisms above those associated with the pre-uprated condition, thus justifying the linear projection.

Disposition

Validation, 10 CFR 54.21(c)(1)(i) – The analyses remain valid for the period of extended operation.

Request for Additional Information (RAI) 4.3.6-1

Background:

LRA Section 4.3.6 states that Alloy 82/182 welds are used for attaching the pressurizer surge, spray, and relief valve nozzles to safe ends, and the safe ends to the connecting piping. The staff noted that for these dissimilar metal welds, complete Alloy 690 structural weld overlays were completed during refueling outage 12 (Spring 2008). The applicant stated that these overlays were supported by fatigue crack growth analyses projected for a 60-year life, to the end of the period of extended operation, and are therefore not TLAAs. LRA Section 4.3.6 also states that a reactor vessel hot-leg nozzle Alloy 600 weld was mitigated through Mechanical Stress Improvement Process (MSIP) repair during refueling outage 13 (Fall 2009). Furthermore, the MSIP repair was also supported by fatigue crack growth analysis projected for a 60-year life, to the end of the period of extended operation, and is therefore not a TLAA.

Issue:

The applicant stated that the fatigue crack growth analyses for both the pressurizer and the reactor vessel were projected for a 60 year life to the end of the period of extended operation.

However, the applicant stated in the "Conclusion" portion of LRA Section 4.3.6 that no TLAA exists for fatigue crack growth, fracture mechanics stability, or corrosion analyses. It is not clear to the staff if the analyses performed utilize (1) a 60-year assumption or (2) a 40-year assumption and then projected for a 60-year period.

The applicant also did not demonstrate why such analyses did not meet all of the six criteria identified in 10 CFR 54.3(a) for the definition of a TLAA.

If the analyses were projected for 60 years and it is not clear why the analyses should not be disposed in accordance with 10 CF54.21 (c)(1) as a TLAA.

In addition, the LRA does not provide any details regarding the fatigue crack growth analyses.

It is not clear to the staff if the crack growth analyses included crack growth due to both corrosion fatigue and stress corrosion cracking (SCC).

Request:

1. Clarify whether the fatigue crack growth analyses performed for both the pressurizer and reactor vessel in LRA Section 4.3.6 utilize a 60-year assumption or a 40-year assumption and then projected for a period of 60-year.

2. Clarify and justify whether the fatigue crack growth analyses performed for both the pressurizer and reactor vessel in LRA Section 4.3.6 include both stress corrosion cracking and corrosion fatigue crack growth.

3. For the fatigue crack growth analyses discussed in LRA Section 4.3.6 for the pressurizer, justify why those analyses should not be identified as a TLAA. If the analyses should be considered as a TLAA and dispositioned in accordance with 10 CFR 54.21 (c)(1)(i), justify the disposition and provide detail information regarding the initial flaw size, loading cycles assumptions, and critical flaw size. If the analyses should be considered as a TLAA and disposed of in accordance with 10 CFR 54.21 (c)(1)(ii), justify the disposition and provide the information regarding the initial flaw size, loading cycles assumptions, critical flaw size, and projected flaw size through the end of the period of extended operation.

4. For the fatigue crack growth analyses discussed in LRA Section 4.3.6 for the reactor vessel, justify why those analyses should not be identified as a TLAA. If the analyses should be considered as a TLAA and disposed of in accordance with 10 CFR 54.21 (c)(1)(i), justify the disposition and provide detailed information regarding the initial flaw size, loading cycles assumptions, and critical flaw size. If the analyses should be considered as a TLAA and disposed of in accordance with 10 CFR 54.21 (c)(1)(ii), justify the disposition and provide the information regarding the initial flaw size, loading cycles assumptions, critical flaw size, and projected flaw size through the end of the period of extended operation.

NextEra Energy Seabrook Response:

(1) The fatigue crack growth analyses performed for both the pressurizer and reactor vessel in LRA Section 4.3.6 utilize a 43-year assumption. This assumption evaluates the weld components to the end of the period of extended operating period.

(2) The fatigue crack growth analyses performed for both the pressurizer and reactor vessel in LRA Section 4.3.6 include both stress corrosion cracking and corrosion fatigue crack growth.

(3) The analyses prepared for the fatigue crack growth analyses discussed in LRA Section 4.3.6 for the pressurizer should not be identified as a TLAA, because 10 CFR 54.3 Criteria 3 is not met, that the analyses involve time-limited assumptions defined by the current operating period.

(4) The analyses prepared for the fatigue crack growth analyses discussed in LRA Section 4.3.6 for the reactor vessel should not be identified as a TLAA, because 10 CFR 54.3 Criteria 3 is not met, that the analyses involve time-limited assumptions defined by the current operating period.

Request for Additional Information (RAI) 4.3.7-1

Background:

LRA Section 4.3.7 discusses the fatigue-related TLAAs of Non-Class 1 piping and components. The applicant stated that these piping and tubing components can be designed in accordance with ASME Code Section III Class 2 and 3.

Issue:

SRP-LR Section 4.3.1.1.2 indicates that for piping designed and analyzed to ANSI B31 1, ANSI B31.1 specifies allowable stress levels based on the number of anticipated thermal cycles. As an example, UFSAR Table 3.2-2 indicates that the piping (downstream of Safety Valves) of the Pressurizer Relief Discharge System is designed to ANSI B31.1. LRA Section 2.3.1.1 also identifies that the Pressurizer Relief Tank, pump, heat exchanger, and connected pipes and valves are within the scope of the License Renewal. However, the applicant did not provide any detail regarding applicable ANSI B31.1 piping in the LRA Section 4.3.7.

Request:

Clarify whether there are any piping, piping components or piping elements, designed and analyzed in accordance with ANSI B31.1, that are within the scope of the license renewal. Justify that LRA Section 4.3.7 provides adequate disposition of fatigue-related TLAA for all non-Class 1 piping and components (including Class 2, Class 3, and ANSI B31.1).

NextEra Energy Seabrook Response:

As shown in UFSAR Table 3.2-2 there are several sections of ANS Safety Class NNS (Non-Nuclear Safety) piping which the principal design code is B31.1 and are seismic Category I. These piping, piping components or piping elements are within the scope of license renewal for a(2) as a failure could affect an a(1) classified component.

As specified in LRA 4.3.7, the 60-year transient projection results shown in LRA Table 4.3.1-3 for Seabrook Station show that even if all of the projected operational transients are added together, the total number of cycles projected for 60 years will not exceed 7,000 cycles limit for not needing to reduce the allowable thermal moment range in ASME Section III Class 2 and 3 and B31.1 rules. Therefore, there is no impact upon the implicit fatigue analyses used in the component design for the systems designed to ASME Section III Class 2 and 3 requirements. The same argument can be made as to the cyclic thermal cycles on the non-nuclear safety classified components (including B31.1) of these systems that are within the scope of license renewal.

Request for Additional Information (RAI) 4.7.9-1

Background:

LRA Section 4.7.9 addresses the fatigue analysis of canopy seal clamp assemblies and states that the design analysis is a TLAA requiring evaluation for the period of extended operation.

Issue:

It is not clear to the staff if the original fatigue analysis referred to fatigue crack initiation or fatigue flaw growth. If the analysis was a fatigue flaw growth analysis, detailed information regarding the initial flow size, loading cycles assumption, and critical flow size are needed for the staff to evaluate the TLAA disposition. The staff reviewed LRA Section 3 and Section 4.7.9 and noted that the effect of aging of the canopy seal clamp assemblies was also not identified in the LRA. The staff noted that the fatigue analysis was based on the consideration of 400 cycles consisting of 20 occurrences of the Operating Basis Earthquake (OBE) and each occurrence having 20 cycles of maximum response as discussed in LRA Section 4.7.9. However, in LRA Table 4.3.1-3, the 60-year projected cycles is 10 for OBE and Note 3 of Table 4.3.1-3 indicates that each earthquake has 10 cycles.

Request:

1. Clarify the effect of aging for the canopy seal clamp assemblies in LRA Section 4.7.9 and justify that the TLAA disposition is appropriate for the effect of aging of the canopy seal clamp assemblies.

2. Clarify whether the fatigue analysis referred to in LRA Section 4.7.9 is a fatigue crack initiation analysis or a fatigue flaw growth analysis. If the analysis involved is a fatigue flaw growth, justify the disposition and provide detailed information regarding the initial flaw size, loading cycles assumptions, and critical flaw size and justify that the analysis and the disposition of the TLAA is appropriate for the effect of aging of the canopy seal clamp assemblies.

3. Clarify and justify the use of different assumed number of cycles during an OBE earthquake in different sections of the LRA. Clarify whether OBE is the only transient input to the fatigue analysis.

NextEra Energy Seabrook Response:

1. There is no specific aging effect identified for the Canopy Seal Clamp Assemblies in LRA Section 4.7.9. However, there is an aging effect identified for the Head Adapters since a fatigue analysis was developed using design transients over the

current operating term. NextEra Energy Seabrook has conservatively classified the analyses associated with these Head Adapters as a TLAA to verify that the assumptions of analyzed design transients remain bounded for the period of extended operation.

2. The fatigue analysis referred to in LRA Section 4.7.9 for the Head Adapters is a fatigue crack initiation analysis. The Head Adapters fatigue analyses assumed 400 OBE cycles (accounting for 94.5% of the computed fatigue usage) and several other cycles (accounting for 5.5% of the computed fatigue usage).

3. The analysis of the Head Adapters was based on the Upset Condition of an Operational Based Earthquake (OBE) of 20 occurrences of 20 cycles for a total of 400 cycles. These conditions are bounded by the Reactor Coolant Design Transients of Upset Condition OBE limitation of 5 sets of 10 cycles as shown in UFSAR Table 3.9(N)-1

Based on the above discussion, the following change has been made to the Seabrook Station License Renewal Application:

In Section 4.7.9, page 4.7-11, the Summary Description is revised as follows:

The canopy seal clamp assemblies were designed for a 40 year design life on the basis of meeting stress limits. The ***Head Adapters*** ~~original~~ fatigue analysis ~~considered the forces that would be applied to the center head adapter which maximized the moments on the J-Grove weld and moment along the length of the adapter. The fatigue analysis for the Canopy Seal Clamps~~ is based on the consideration of 400 cycles consisting of 20 occurrences of the Operating Basis Earthquake, each occurrence having 20 cycles of maximum response. This design analysis is a TLAA requiring evaluation for the period of extended operation.

Request for Additional Information (RAI) 4.7.10-1

Background:

LRA Section 4.7.10 summarizes the TLAA for hydrogen analyzer radiation dose analysis. UFSAR Table 6.2-84 defines the Hydrogen Analyzer design parameters and maximum radiation dose limits of $5x10^6$ rads for 40-years of normal operation.

Issue:

The staff reviewed LRA Section 2.3.2.1 and LRA Table 3.2.2-1, Combustible Gas Control System, and was not able to identify the aging effect for the hydrogen analyzer. The staff was not able to identify any aging management review (AMR) line items specifically associated with the hydrogen analyzers in LRA Table 3.2.2-1.

Request:

Identify the aging effect associated with the hydrogen analyzers of the Combustible Gas Control System and justify that the analysis and the disposition of the TLAA is appropriate for this aging effect associated with the hydrogen analyzers. Justify that the AMR results provided in Table 3.2.2-1 adequately address the aging effect for the hydrogen analyzers.

NextEra Energy Seabrook Response:

The hydrogen analyzers were included as a TLAA primarily because the radiation dose limits of the analyzers were based on a 40 year period, as described in UFSAR Table 6.2-84. As stated in LRA 4.7.10, the existing hydrogen analyzer radiation design limit exceeds the predicted radiation dose for 60 years, and therefore, the analysis remains valid for the period of extended operation.

The hydrogen analyzers are active components within the scope of License Renewal, and in accordance with 10 CFR 54.21(a)(1)(i) do not require aging management review. Since the hydrogen analyzers do not require aging management review, no revision to LRA Section 2.3.2.1 or Table 3.2.2-1 is required.

Request for Additional Information (RAI) 4.7.11-1

Background:

LRA Section 4.7.11 states that the evaluation demonstrated that safety-related active mechanical equipment in harsh environments has been adequately addressed. The applicant also stated that mechanical equipment qualification (MEQ) is a TLAA because a period of 40 years was used for normal service radiation exposure. The applicant stated that the temperature, pressure, and time profiles have been adjusted to account for approved power uprate condition. Therefore, no further TLAA evaluations for license renewal are required. However, the staff noted that in UFSAR Section 3.11.2, the environmental parameters of interest are temperature, pressure. humidity, radiation, chemical spray, and submergence. The applicant stated that the effect of aging on the intended function of equipment will be adequately addressed for the period of extended operation. Commitment No. 45 was provided in the LRA indicating that the MEQ files will be revised prior to the period of extended operation.

Issue:

SRP-LR Section 4.7.3.1.2 indicates that for a TLAA disposition pursuant to 10 CFR 54.21 (c)(1)(ii), the applicant shall provide a sufficient description of the analysis and document the results of the reanalysis to show that it is satisfactory for the 60-year period. The application does not provide this information. Therefore, it is not clear to the staff if the applicant accounted for the environmental parameters in addition to radiation exposure, temperature, pressure, and time profiles. It is also not clear to the staff what the "time profiles" are. For the radiation exposure, the applicant also did not identify the 40-year radiation exposure limit of the safety-related active mechanical equipment, the projected 60-year radiation exposure limit, or the design limit for the radiation exposure. Without such information, the staff cannot evaluate the adequacy of the TLAA.

Furthermore, it is not clear to the staff how the applicant's Commitment 45 is consistent with disposition of the TLAA pursuant to 10 CFR 54.21 (c)(1)(ii). There is also no indication of what information will be re-evaluated and revised in Commitment No. 45.

Request:

1. Clarify and justify that all environmental parameters identified in UFSAR 3.11.2 has been evaluated and accounted for a period of 60 years. Clarify in detail what the time profile is being referred to in LRA Section 4.7.11.

2. Identify the 40-year radiation exposure limit of the safety-related active mechanical equipment, the projected 60-year radiation exposure limit, and the design limit for the radiation exposure. Justify that the radiation exposure have been appropriately accounted for in the TLAA analysis.

3. 10 CFR 54.21 (c)(1)(ii) requires a demonstration that analyses have been projected to the end of the PEO. Explain how LRA Section 4.7.11 and Commitment 45 satisfy 10 CFR 54.21 (c)(1)(ii).

4. Clarify and revise Commitment No. 45 to delineate the information to be re-evaluated and revised. Clarify whether all the MEQ files will be revised or justify why only selected MEQ files will be revised.

NextEra Energy Seabrook Response:

1. As stated in LRA Section 4.7.11, 40 years was used to determine the normal service radiation exposure. None of the other environmental parameters were based on a 40 year interval. Only the normal service radiation exposure was subject to a TLAA. Unlike Electrical EQ, Mechanical EQ is much simpler, with few detailed requirements. Electrical EQ is a program. MEQ is simply a report.

MEQ does not have time-based thermal aging requirements. The time profiles referred to in the LRA 4.7.11 Analysis section, refer to design basis event conditions which do not change due to License Renewal and, therefore, do not need to be reevaluated.

2. Though not included in the LRA, Seabrook has a calculation of EQ zone total integrated radiation dose design values for a 60 year plant life which provides values for various environmental zones. These zones consist of rooms or areas within different buildings and elevations in the station. The radiation dose design values vary by zone. This calculation has been used to evaluate the 60 year dose impact on the MEQ equipment in their respective zones. The 60 year design dose values were compared to the current design dose limits of the equipment and it was determined that the 60 year design dose limits are bounded by the existing equipment design dose limits. Analyses were included wherever necessary to support the conclusions.

3. This evaluation has been completed and is available in a license renewal technical report. The 60 year design doses are projected to remain bounded by the existing equipment dose limits for all components within the scope of MEQ. As listed in LRA Table A.3, Commitment 45 will track the formal revision of the Mechanical Equipment Qualification files prior to the period of extended operation.

4. LRA 4.7.11 already defines the scope of the TLAA as being limited to normal service radiation exposure. Commitment No. 45 applies to all Mechanical Equipment Qualification files.

Based on the above discussion, the following changes are made to the LRA.

1. On page 4.7-13, in Section 4.7.11, "Disposition" is revised as follows:

Disposition

Revision, 10 CFR 54.21(c)(1)(ii) – The effects of aging on the intended function(s) of equipment included under Mechanical Equipment Qualification ~~will be adequately~~ ~~addressed~~ ***have been projected to be bounded by existing equipment design limits,*** for the period of extended operation. Calculations for Mechanical Equipment Qualification will be revised prior to entering the period of extended operation. ~~Revision of MEQ calculations will be accomplished using techniques currently used under the CLB for equipment qualification including analytical methods, replacement of radiation sensitive materials or equipment replacement.~~

2. On page A-35, 5th paragraph in Section A.2.4.5.9 is revised as follows:

   The effects of aging on the intended function(s) of equipment included under Mechanical Equipment Qualification ~~will be adequately addressed~~ ***have been projected to be bounded by existing equipment design limits, in accordance with 10 CFR 54.21(c)(1)(ii),*** for the period of extended operation. Calculations for Mechanical Equipment Qualification will be revised prior to entering the period of extended operation. ~~Revision of MEQ calculations will be accomplished using techniques currently used under the CLB for equipment qualification including analytical methods, replacement of radiation sensitive materials or equipment replacement, in accordance with 10 CFR 54.21(c)(1)(ii).~~

Request for Additional Information (RAI) 4.1-1

Background:

LRA Table 4.1-2 "Review of Analyses Listed in NUREG-1800 Table 4.1-3 -Additional Examples of Plant-Specific TLAAs," states that the analysis associated with flow-induced vibration (FIV) endurance limit is applicable and is addressed in LRA Section 4.3.3.

UFSAR Section 3.9(N).2.4 discusses the impact of FIV effects on the integrity of the reactor vessel internal (RVI) components.

Issue:

LRA Section 3.1 and LRA Table 3.1.2-1 does not indicate whether FIVs can result in either cracking by high cycle fatigue or loss of material by fretting or wear of the RVI components that are identified in LRA Table 3.1.2-2. In addition, LRA Section 4.3.3 does not discuss how cracking induced by FIVs and loss of material induced by FIVs is being managed in the RVI components that are in the scope of license renewal and listed in LRA Table 3.1.2-2.

It is not clear to the staff whether cracking induced by FIVs and loss of material induced by FIVs are applicable aging effects requiring management (AERM) for the RVI components in LRA Table 3.1.2-3 and if so, whether the CLB includes any analysis that evaluated these aging effects and mechanisms on the integrity of the RVI components. It is also not clear whether the analysis is a TLAA as defined in 10 CFR 54.3.

Request:

Clarify whether cracking induced by FIVs or loss of material (i.e., wear or fretting) induced by FIVs are applicable AERM for the RVI components that are subject to AMR in LRA Table 3.1.2-2.

Clarify whether the CLB includes any analysis that evaluated the impact of FIVs on the structural integrity of the RVI components as a result of these aging mechanisms. If so, clarify and justify whether the analysis is a TLAA as defined in 10 CFR 54.3 and whether the LRA needs to be amended to include this analysis in accordance with 10 CFR 54.21(c)(1).

NextEra Energy Seabrook Response:

Flow-induced vibration (FIV) analysis of the Seabrook internals was not performed as part of the CLB. However, flow -induced vibrations of PWR internals have been studied by Westinghouse for a number of years. The objective of these studies is to show the structural integrity and reliability of reactor internals components. These efforts have included in-plant tests, scale-model tests, as well as tests in fabricators' shops and bench tests of components, along with various analytical investigations. The results of these scale-model and in-plant tests indicate that the vibrational behavior of two-, three-, and four-loop plants is essentially similar, and the results obtained from each of these tests complement one another and make possible a better understanding of the flow-induced vibration phenomena. Based on this and further analyses performed for the Seabrook Station reactor internals, the response due to flow induced vibrations on fatigue is extremely small and well within the allowable based on the high cycle endurance limit for the materials. Therefore, this is no need to monitor the age-related effects of FIV on the fatigue of reactor vessels internals for Seabrook Station.

Request for Additional Information (RAI) 4.1-2

Background:

LRA Table 4.1-2 "Review of Analyses Listed in NUREG-1800 Table 4.1-3 -Additional Examples of Plant-Specific TLAAs," states that the analysis associated with ductility reduction of fracture toughness for the RVI components is applicable and addressed in LRA Section 4.3.3. However, LRA Section 4.3.3 does not include a discussion related to this specific issue.

UFSAR Section 3.9(N).5.4 indicates that the RVI core support structure components have been designed to ASME Section III, Subsection NG. ASME Section III Paragraph NG-2160 states that it is the responsibility of the owner to select material suitable for the conditions stated in the Design Specification (NA-3250), with specific attention being given to the effects of service conditions upon the properties of the material.

LRA Table 3.1.2-2 identifies loss of fracture toughness as an applicable aging effect requiring management AERM for the RVI components that are subject to an AMR. The applicant's further evaluation discussion in LRA Section 3.1.2.2.6 is associated with these AMR items.

Issue:

The service conditions that may degrade material properties of RVI components include neutron irradiation, temperature, and reactor coolant environment. Recent industry reports, such as MRP-211, "Materials Reliability Program: PWR Internals Age-Related Material Properties, Degradation Mechanisms, Models, and Basis Data-State of Knowledge -TR-1015013, show that fracture toughness of irradiated stainless steels is decreased to a K_{1c} = 38 MPa $m^{1/2}$ at neutron fluencies of 5 dpa. The staff noted that most RVI components are likely to exceed this neutron dose level during the period of extended operation. It is not clear to the staff whether the CLB includes any neutron fluence-dependent reduction of fracture toughness analysis for the RVI components that are in the scope of license renewal and listed in LRA Table 3.1.2-2.

Request:

Clarify whether the CLB includes any neutron fluence-dependent reduction of fracture toughness analysis for the RVI components that are subject to an AMR in LRA Table 3.1.2-3. If so, clarify and justify whether the analysis is a TLAA as defined in 10 CFR 54.3 and whether the LRA needs to be amended to include this analysis in accordance with 10 CFR 54.21 (c)(1).

NextEra Energy Seabrook Response:

Fluence dependent changes in fracture toughness properties have been evaluated experimentally, and the data from irradiated austenitic stainless steels with neutron exposures greater than $3x10^{21}$ n/cm^2 (E > 1 MeV) [> 4.5 dpa] show that the material properties (e.g., yield strength and tensile strength) plateau when exposed to doses in the range of 5 – 10 dpa. Thus, the fracture toughness saturates at a corresponding lower bound fracture toughness of about 40 MPa-$m^{1/2}$ (36 ksi-$in^{1/2}$), which is adequate toughness to assure functionality (as described in MRP-175). Fluence-dependent reduction of fracture toughness of vessel internals is not analyzed as part of the current licensing design basis for Seabrook since this has been analyzed generically for all Westinghouse designed plants. Loss of fracture toughness due to irradiation is an aging management effect that will be managed by inspection and evaluation per the Seabrook Station Vessel Internals Program.

Request for Additional Information (RAI) 4.1-3

Background:

LRA Section 4.1.3 states that pursuant to 10 CFR 54.21 (c)(2), an applicant for license renewal should include a list of unit-specific exemptions granted to 10 CFR 50.12 that are in effect and based on a TLAA as defined in 10 CFR 54.3. The applicant stated that each exemption has been reviewed to determine exemptions that are based on a TLAA The applicant further stated that the CLB documentation, identified in Section 4.1.1, was reviewed and no exemptions granted pursuant to 10 CFR 50.12 and based on a TLAA as defined in 10 CFR 54.3, have been identified.

On November 12, 2002, FPL Energy Seabrook, LLC, requested an exemption from compliance with the pressure-temperature (P-T) limit generation requirements of 10 CFR Part 50, Appendix G. The applicant requested this exemption in accordance with 10 CFR 50.60(b), specifically, requesting NRC approval to use ASME Code Case N-641 as the basis for generating its P-T limit curves. The staff granted this exemption in accordance with 10 CFR 50.12 by its safety evaluation and exemption approval letter to FPL Energy Seabrook, LLC, dated August 1, 2003.

The staff noted that the exemption permits the applicant to generate the P-T limit curves using the adjusted reference temperature equation for a K_{Ic} linear elastic fracture toughness criterion.

Issue:

The staff noted that the stated exemption has a specific relationship to the applicant's generation of its P-T limit curves, which is identified as a TLAA and documented in LRA Section 4.2.4. The staff's review did not identify a withdrawal of the exemption that was granted in accordance with 10 CFR 50.12 by its safety evaluation and exemption approval letter to FPL Energy Seabrook, LLC, dated August 1, 2003. Therefore, the staff noted that this exemption may need to be identified as an exemption that is based on a TLAA in accordance with 10 CFR 54.21 (c)(2).

Request:

Clarify and justify whether the stated exemption needs to be identified as an exemption that is based on a TLAA in accordance with 10 CFR 54.21 (c)(2) and whether continuation of the exemption(s) will be needed for the period of extended operation.

NextEra Energy Seabrook Response:

This exemption request for use of the K_{IC} curve is not based on a TLAA since the reference toughness curve will not change with time. However, the effects of neutron fluence on the vessel beltline materials must be monitored. Specifically, the changes in

toughness due to neutron irradiation are referenced to the RT_{NDT}, or adjusted reference temperature, of the limiting vessel materials. The aging effects due to neutron irradiation are managed as a TLAA under Section 4.2.4 and the Reactor Vessel Integrity Surveillance Program. The changes in RT_{NDT} would not affect the continuation of the exemption to use Code Case N-641 for the period of extended operation. In addition NRC Regulatory Issue Summary 2004-04 indicates that the use of NRC-approved ASME Code Cases in conjunction with earlier versions of the ASME Code endorsed in 10 CFR 50.55a may also be used for development of P/T limit curves without the need for an exemption. NRC RG 1.147 approves N-641, therefore, this exemption will not be required for the period of extended operation.

As identified by the staff this exemption should have been included in LRA section 4.1.3, and is provided below, however the conclusion stated in LRA section 4.1.3, remains unchanged.

LRA section 4.1.3, as shown on page 4.1-3 Analyis should be revised as follows:

Analysis

The NextEra Energy Seabrook Facility Operating License identifies two exemptions granted pursuant to 10 CFR 50.12.

- NextEra Energy Seabrook, LLC, is exempt from the Section III.D.2(b)(ii) containment airlock testing requirements of Appendix J to 10 CFR 50, because of the special circumstances described in Section 6.2.6 of SER Supplement 5 and authorized by 10 CFR 50.12(a)(2)(ii) and (iii) (51 FR 37684 October 23, 1986).
- NRC Materials License No. SNM-1963, issued December 19, 1985, granted an exemption pursuant to 10 CFR 70.24 with respect to requirements for criticality alarms. NextEra Energy Seabrook, LLC, is hereby exempted from provisions of 10 CFR 70.24 insofar as this section applies to the storage and handling of new fuel assemblies in the new fuel storage vault, spent fuel pool (when dry), and shipping containers.

On November 12, 2002, Seabrook Station requested an exemption from compliance with the pressure-temperature (P-T) limit generation requirements of 10 CFR Part 50, Appendix G. Seabrook Station requested this exemption in accordance with 10 CFR 50.60(b), specifically, requesting NRC approval to use ASME Code Case N-641 as the basis for generating its P-T limit curves. The NRC staff granted this exemption in accordance with 10 CFR 50.12 by its safety evaluation and exemption approval letter to dated August 1, 2003

UFSAR Section 3.9(N) identifies an exemption from a portion of 10 CFR Part 50, "*Domestic Licensing of Production and Utilization Facilities*" Appendix A, General Design Criterion 4 "*Environmental and Dynamic Effects Design Bases*". Acceptance of this exemption is documented in NUREG-0896 Supplement 5, Appendix K. The exemption permitted Seabrook Station to eliminate the protective devices and the

dynamic loading effects associated with the postulated primary loop pipe breaks for Seabrook Station, Units 1. The exemption was limited until the completion of the second refueling outage pending outcome of commission rulemaking regarding Leak-Before Break analysis.

Request for Additional Information (RAI) 4.7.12-1

Background:

SRP-LR Section 4.1.2 states that pursuant to 10 CFR 54.3, TLAAs are those licensee calculations and analyses that:

1. *Involve systems, structures, and components within the scope of license renewal, as delineated in 10 CFR 54.4(a);*

2. *Consider the effects of aging;*

3. *Involve time-limited assumptions defined by the current operating term, for example, 40 years;*

4. *Were determined to be relevant by the licensee in making* a *safety determination,·*

5. *Involve conclusions or provide the basis for conclusions related to the capability of the system, structure, or component to perform its intended function(s), as delineated in 10 CFR 54.4(b); and*

6. *Are contained or incorporated by reference in the CLB.*

LRA Section 4.7.12 summarizes the absence of TLAAs for metal corrosion allowances and corrosion effects. The applicant stated that a review of the Seabrook Station licensing basis found no description of time dependent corrosion allowances, rates, or corrosion-dependent design lives of pressure vessels, system components, piping, or metal containment components, and therefore concluded that there are no TLAAs for metal corrosion allowances and corrosion effects.

The Seabrook UFSAR, Section 5.4.2.3, Steam Generators, Design Evaluation, subsection (d), Allowable Tube Wall Thinning under all Plant Conditions, states:

> The corrosion rate is based on a conservative weight loss rate of Inconel tubing in flowing 650°F primary side reactor coolant fluid. The weight loss, when equated to a thinning rate and projected over a 40-year design operating objective, with appropriate reduction after initial hours, is equivalent to 0.083 mils thinning. The assumed corrosion rate of 3 mils leaves a conservative 2.917 mils for general corrosion thinning on the secondary side.

Issue:

The staff's review of the Seabrook licensing basis in the UFSAR identified a description of time dependent corrosion associated with the steam generator tubes. The staff believes that the weight loss rate and the remaining wall calculations for a 40-year design meet the six criteria in the SRP-LR and therefore, meet the definition of TLAA.

Request:

Provide additional justification as to why metal corrosion allowance for steam generator tube wall is not considered a TLAA.

NextEra Energy Seabrook Response:

NextEra agrees with the staff's conclusion that the time dependent corrosion associated with the steam generator tubes does meet the definition of a TLAA. Based on the above discussion, the following changes have been made to the Seabrook Station License Renewal Application:

1. In Section 4.7.12, page 4.7-13, is revised in its entirity as follows:

4.7.12 TLAA FOR METAL CORROSION ALLOWANCES AND CORROSION EFFECTS

Summary Description

Nuclear plant components are commonly designed with corrosion allowances and TLAAs of corrosion effects for the 40-year design life.

Analysis

A review of the Seabrook Station licensing basis found that a general corrosion and erosion rate of 3 mils is assumed for the steam generator tube wall. The corrosion rate is based on a conservative weight loss rate of Inconel tubing in flowing 650°F primary side reactor coolant fluid. The weight loss, when equated to a thinning rate and projected over a 40-year design operating objective, with appropriate reduction after initial hours, is equivalent to 0.083 mils thinning. A linear projection of this thinning rate to a 60-year period is equivalent to 0.1245 mils thinning. This linear projection to 60 years is considered to be conservative because it includes in the base rate the higher rate during the initial hours.

The assumed corrosion rate of 3 mils leaves a conservative 2.8755 mils for general corrosion thinning on the secondary side.

Disposition

Aging Management, 10 CFR 54.21(c)(1)(iii) – The effects of aging on the intended function(s) will be adequately managed for the period of extended operation by the Steam Generator Tube Integrity Program (B.2.1.10), which manages the aging effects of loss of material due to wall thinning from flow accelerated corrosion of the Steam Generator components.

2. Table 4.1-1, TLAA Category 6 on page 4.1-6, "Metal Corrosion Allowance" is revised as follows:

Table 4.1-1 Time-Limited Aging Analyses Applicable to Seabrook Station			
TLAA Category	**Description**	**Disposition Method(s)**	**LRA Section**
	~~Absence of a~~ TLAA for Metal Corrosion Allowance	~~N/A~~ *§54.21(c)(1)(i)*	4.7.12

3. Table 4.1-2, page 4.1-7, "Metal Corrosion Allowance" is revised as follows:

Table 4.1-2 Review of Analyses Listed in NUREG-1800 Tables 4.1-2 and 4.1-3		
NUREG-1800 Examples	**Applicability to Seabrook**	**LRA Section**
NUREG-1800, Table 4.1-2 – Examples of Potential TLAAs		
Metal corrosion allowance	~~No~~ *Yes*	4.7.12

<u>Request for Additional Information (RAI) 4.2.2-1</u>

Background:

The Seabrook LRA Tables 4.2.2-1 and 4.2.3-1 include data for the extended beltline materials (including the upper, intermediate, and lower shells of the RPV and the associated welds). The NRC's Reactor Vessel Integrity Database (RVID) does not contain information for the upper shell, the upper shell axial welds, and the upper-to-intermediate shell circumferential weld of the Seabrook RPV.

Request:

Discuss the procedures that you used to determine the chemistry data. Initial reference temperature (RT_{NDT}), margins and initial upper shelf energy (USE) values for the extended beltline materials to demonstrate that you have applied consistent approaches in determining the above mentioned material information for all of the extended beltline materials.

NextEra Energy Seabrook Response:

Material properties (chemistry data, initial reference temperature (RT_{NDT}), margins and initial upper shelf energy (USE)) for the extended beltline materials (upper shell plates (R1807-1 through 3), upper-to-intermediate shell circumferential weld and upper shell axial welds of the Seabrook RPV were obtained from the following references (material CMTRs, OEM certified letter reports, 10CFR50.61, Rev. 2, and Seabrook UFSAR):

1. Combustion Engineering Welding Material Certification, Heat No. 86998, Chattanooga Metallurgical and Materials Laboratory, June 10, 1974.

2. Westinghouse Letter, LTR-RIDA-10-12, Subject, "Seabrook Unit 1 Reactor Vessel Upper Shell Plate and Weld material Information," from D. B. Denis to M. Turley Dated February 1, 2010.

3. U.S. Code of Federal Regulations, Title 10, Energy, Part 50.61, "Fracture Toughness Requirements for Protection Against Pressurized Thermal Shock Events,".

4. Seabrook Station UFSAR, Chapter 5, Table 3-3.

The Initial RT_{NDT} for the upper-to-intermediate shell circumferential weld was assumed to be -56°F based on a generic mean value for Linde 0091 flux type welds and the guidance provided in Reference 3.

Request for Additional Information (RAI) 4.7.2-1

Background:

The applicant is relying on the fatigue crack growth analysis in WCAP-14535-A, "Topical Report on Reactor Coolant Pump Flywheel Inspection Elimination," as the TLAA for the reactor coolant pump (RCP) flywheels. The staff verified that the NRC endorsed the methodology and results in this WCAP report for use in a safety evaluation (SE) dated September 12. 1996. However, in the conclusion section of the SE (Section 4.0), the staff concluded that the inspections of the flywheels should be performed even if

all of the recommendations of Regulatory Guide 1.14, Revision 1, "Reactor Coolant Pump Flywheel Integrity," were met and that the inspections of the RCP flywheels should not be completely eliminated.

Issue:

The applicant has not clearly linked the operating experience at Seabrook with the fatigue crack growth analysis in WCAP-14535-A. Plus, it is not clear from the TLAA discussion whether the applicant intends to be consistent with the position taken in the staff's SE of September 12, 1996 and continue the inservice inspection (ISI) of the RCP flywheels during the period of extended operation, or whether the applicant is proposing to discontinue the ISI of the RCP flywheels during the period of extended operation.

Request:

1. Discuss the past examination results for the RCP flywheels at Seabrook and how those results justify the use of the WCAP-14535-A.

2. Clarify whether the applicant intends to continue the ISI of the RCP flywheels consistent with the NRC's SE on WCAP-14535, dated September 12,1996. If ISI will be performed during the period of extended operation, the staff also requests the applicant to justify what type of inspections will be performed on the RCP flywheels during the period of extended operation and the frequency that will be used for the inspections. Otherwise, the applicant is requested to justify its basis for discontinuing the ISI of the RCP flywheels if the ISI will be discontinued during the period of extended operation.

NextEra Energy Seabrook Response:

1) During the first 20 years of operation at Seabrook Station, RCP flywheel inspections including surface and volumetric examinations of all of the RCP motor flywheels have been performed in accordance with Technical Specification requirements, resulting in no unacceptable indications. The review of the flywheel surface and volumetric examinations for the RCP motor flywheels has found that all inspections to date had acceptable results. There were no indications found in any of the ISI inspection reports that required a flaw evaluation to be submitted to the staff for evaluation as required by regulatory position C.4.b(5) of Regulatory Guide 1.14, Rev. 1

2) During the period of extended operation, Seabrook Station will continue the ISI of RCP flywheels consistent with the approved operating license which currently requires ISI of the RCP Flywheel every ten years. NextEra Energy Seabrook is evaluating a License Amendment Request for approval to change the current inspection frequency as outlined in Industry/Technical Specification Change

Traveler TSTF-421, "Revision to RCP Flywheel Inspection Program (WCAP-15666), which calls for inspection every 20 years.

Request for Additional Information (RAI) 4.3.1-1

Background:

In LRA Section 4.3.1, the applicant discussed the 60-year transient projection methodology. The applicant stated that the 60-year projection was determined by adding the cumulative number of occurrences as of April 1, 2009 to the number of cycles predicted to occur in the 41 years of future operation.

Issue:

The applicant provided a summary of the projected number of cycles in LRA Table 4.3.1-3. The staff noted that the "Unit Loading Between 0% and 15% Power" and "Unit Unloading Between 0% and 15% Power" transient cycles listed in that table for the "60-Year Projected Cycles" are not consistent with the current count for these transients. More specifically, the projected numbers (listed as 13 and 10) are smaller than the actual counts so far (listed as 27 and 26) for the "Unit Loading Between 0% and 15% Power" and "Unit Loading Between 0% and 15% Power" transients, respectively.

Request:

For the transients "Unit Loading Between 0% and 15% Power" and "Unit Unloading Between 0% and 15% Power" in LRA Table 4.3.1-3, justify why the values of 60-Year Projected Cycles are smaller than the values of "Current Cycles." Clarify the values in the "Current Cycles" column and "60-Year Projected Cycles column." Amend the LRA, as applicable, to address this clarification.

NextEra Energy Seabrook Response:

As pointed out by the staff, LRA Table 4.3.1-3 incorrectly reflects the values of 60-Year Projected Cycles as less than the values of Current Cycles for Unit Loading Between 0% and 15% Power" and Unit Unloading Between 0% and 15% Power.

Table 4.3.1-3 lines for Unit Loading Between 0% and 15% Power" and Unit Unloading Between 15% and 0% Power are revised as follows:

Unit Loading Between 0% and 15% Power	27	~~13~~ ***70***	500
Unit Unloading Between ~~0~~ ***15***% and ~~15~~ ***0***% Power	26	~~10~~ ***65***	500

Enclosure 3 to SBK-L-11015

Response to Request for Additional Information
Seabrook Station License Renewal Application
Scoping – Set 8
and Associated LRA Changes

Request for Additional Information (RAI) 2.1-1

Background:

10 CFR 54.4, "Scope," section (a)(2), requires nonsafety-related systems, structures and components (SSCs) to be included within the scope of license renewal, if the failure of the nonsafety-related SSC could prevent satisfactory accomplishment functions that are the basis for the inclusion of safety-related SSCs within the scope of license renewal.

Issue:

Section 2.1.2.2.3, "Non-Safety Related SSCs In Spatial Proximity Of Safety Related SSCs," of the license renewal application (LRA) states:

> The turbine building contains components associated with the reactor protection and engineered safety features actuation system which have been classified as safety related in the plant equipment database. There are no other safety related SSCs in the turbine building. These components do not perform a safety related function, as defined in 10 CFR 54.4(a)(1), and are not credited in the Seabrook Station accident analysis. The CLB does not credit operation of these components during or after a seismic event and thus seismic design or qualification is not required. Therefore, there are no components in the turbine building that are considered to be in scope for license renewal as defined in 10 CFR 54.4(a)(2).

During the scoping and screening methodology audit, performed on-site September 20-23, 2010, the U.S. Nuclear Regulatory Commission (NRC or the staff) reviewed the LRA and the applicant's 10 CFR 54.4(a) implementing documents. The staff determined that the applicant had identified and evaluated safety-related components located in the turbine building and that the applicant had concluded that the nonsafety-related SSCs in the proximity of, or attached to, the safety-related SSCs were not required to be included within the scope of license renewal.

Request:

The staff requests that the applicant provide the following information:

1. Identify SSCs located in the turbine building that are classified as safety-related in the plant equipment database that were not included within the scope of license renewal in accordance with 10 CFR 54.4(a)(1).
2. Provide the details of the evaluation and the basis for the conclusion that SSCs, located in the turbine building that are classified as safety-related in plant equipment database, do not have an intended function that requires the SSCs to be included within the scope of license renewal in accordance with 10 CFR 54.4(a)(1).

3. Provide the details of the evaluation and basis for the conclusion that nonsafety-related SSCs, in the proximity of or attached to SSCs located in the turbine building and classified as safety-related in plant equipment database, are not required to be included within the scope of license in accordance with 10 CFR 54.4(a)(2).

Describe any additional scoping evaluations performed to address the 10 CFR 54.4(a) criteria. List any additional SSCs that were included within the scope of license renewal as a result of the reviews discussed in this request for additional information (RAI). List the structure and component types subject to aging management review (AMR), AMR results, and aging management programs, as applicable, to be credited for managing the identified aging effects.

NextEra Energy Seabrook Response:

1. The following components are classified as being safety-related and Class IE, are located in the non-seismic turbine building and are not included in the scope of license renewal in accordance with 10 CFR 54.4(a)(1).

   Turbine Impulse Chamber Pressure Transmitters

   Turbine Steam Stop Valve Position Switches

   Turbine Steam Stop Valve Fluid Pressure Switches

   Turbine Steam Dump Valve Air Supply Solenoid Valves

   Feedwater Flow Control and Bypass Valve Position Switches

   Feedwater Flow Control and Bypass Valve Solenoid Valves

2. The above components were evaluated and the basis for the conclusion that SSCs, located in the turbine building that are classified as safety-related in the plant equipment database, do not have an intended function that requires these SSCs to be included within the scope of license renewal in accordance with 10 CFR 54.4(a)(1) is documented below.

   Background:

   The following information pertains to the design criteria for Solid State Protection System (SSPS) input circuits and sensors in the non-seismic turbine building. It applies to the following inputs to the SSPS

   Turbine Impulse Chamber Pressure Transmitters

   Turbine Steam Stop Valve Position Switches

   Turbine Steam Stop Valve Fluid Pressure Switches

During the Seabrook Station operating license review, the NRC in RAI 420.21 requested information on the Reactor Trip on Turbine Trip. Specifically "provide further design bases discussion on this subject per BTP ICSB 26 requirements." The Seabrook Station's response to RAI 420.21 is addressed below, as it pertains to these components.

NUREG 800, BTP ICSB 26, 'Requirements for Reactor Protection System Anticipatory Trips'' Background section states that: "Several reactor designs have incorporated a number of anticipatory or back-up trips for which no credit was taken in the accident analyses. These trips as a rule were not designed to the requirements of IEEE 279 and therefore introduced non-safety grade equipment into the reactor protection system. It was determined by the staff that this was not an acceptable practice, because of possible degradation of the reactor protection system."

In the BTP Technical Position section, it states, "All reactor trips incorporated in the reactor protection system should be designed to meet the requirements of IEEE Std 279. This position applies to the entire trip function from the sensor to the final actuated device. For sensors located in non-seismic areas the installation (including circuit routing) and design should be such that the effects of credible faults (i.e., grounding, shorting, application of high voltage, or electromagnetic interference) or failures in these areas could not be propagated back to the RPS and degrade the RPS performance or reliability. The sensors should be qualified to operate in a seismic event, i.e., not fail to initiate a trip for conditions which would cause a trip".

It goes on to state "SSPS input circuits and sensors in non-seismic structures are Class IE and are routed in conduit to maintain train separation and to prevent the application fault voltages greater than the maximum credible fault voltages. .... The electrical and physical independence of the connecting cabling conforms to Regulatory Guide 1.75."

Turbine Impulse Chamber Pressure Transmitters

The turbine impulse chamber pressure transmitters are classified as safety related Class IE and provide permissive inputs to the solid state protection system (SSPS). In addition, these transmitters provide a permissive to the non-safety related ATWS Mitigating System.

These pressure transmitters are inputs to the P-13 reactor protection system (RPS) as a permissive on a one out of two basis. The P-13 permissive is one of the inputs to the P-7 permissive which automatically unblocks at power trips on increasing power. The potential failure of the P-13 permissive has been previously addressed in the Seabrook Station's response to RAI 420.21.

The response to RAI 420.21, contained the following: "Faults on the first stage turbine pressure circuits would result in an upscale, conservative output for open circuits and a sustained current, limited by circuit resistance for short circuits. Multiple failures imposed on these redundant circuits could potentially disable the P-13 interlock. In this event, the nuclear instrumentation power range signals would provide the P-7 interlock."

The Turbine Impulse Chamber Pressure Transmitters inputs to the SSPS at Seabrook are designed such that the failure of these transmitters will not prevent actuation of the SSPS. They are designed as safety related so that they cannot prevent the SSPS from functioning. They are inputs to the Reactor Protection System and to the ATWS Mitigating system and are not credited in the Seabrook accident analysis.

10 CFR 54.4(a)(2) requires that all non-safety systems, structures and components whose failure could prevent satisfactory accomplishment of any of the safety related functions discussed in 10 CFR 54.4(a)(1) (i), (ii) or (iii) be included in the scope of license renewal.

The Turbine Impulse Pressure transmitters cannot prevent satisfactory accomplishment of any of the safety related functions discussed in 10 CFR 54.4(a)(1). Therefore the requirements of 10 CFR 54.4(a) (2) are not applicable.

Turbine Steam Stop Valve Position and Fluid Pressure Switches

The turbine stop valve position switches and fluid pressure switches are safety related, Class IE and provide inputs to the solid state protection system.

"The reactor trip on a turbine trip is actuated by two out of three logic from emergency trip fluid pressure signals or by all closed signals from the turbine steam stop valves. A turbine trip causes a direct reactor trip above P-9. The reactor trip (sic) on turbine trip provides additional protection and conservatism beyond that required for the health and safety of the public. This trip is included as a part of good engineering practice and prudent design. No credit is taken in any of the safety analyses (Chapter 15) for this trip. The turbine provides anticipatory trips to the Reactor Protection System from contacts which change position when the turbine stop valves close or when the turbine emergency trip fluid pressure goes below its setpoint." (UFSAR 7.2.1.1.b.6).

"Reactor trip is actuated by the first reactor protection system trip setpoint reached with no credit taken for the direct reactor trip on the turbine trip. Trip signals are expected due to high pressurizer pressure, over temperature ΔT, and low-low steam generator water level." (UFSAR 15.2.3.2.a.8)

Seabrook Station UFSAR section 7.2.1.1.b.6 states that: "This design functions in a de-energize-to-trip fashion to cause a plant trip if power is interrupted in the trip circuitry. This ensures that the protection system will in no way be degraded by this anticipatory trip because seismic design considerations do not form a part of the

design bases for anticipatory trip sensors."..."The SSPS input circuits in non-seismic structures are routed in conduit to maintain train separation and to prevent the application of fault voltages greater than the maximum credible fault voltage. The electrical and physical independence of the connecting cabling conforms to Regulatory Guide 1.75. The anticipatory trips thus meet IEEE 279-1971, including redundancy, separation, single failure, etc. Seismic qualification of contacts sensors is not required."

While these components are classified as safety related, their functioning is strictly anticipatory, and the Seabrook Station current licensing basis requires them to meet the requirements of IEEE 279 to prevent failures or faults from propagating back to the RPS. Neither this BTP nor IEEE standard require the components which provide anticipatory trips be safety related. In NUREG-0896, "Safety Evaluation Report related to the operation of Seabrook station Units 1 and 2" March 1983 section 7.2.3 the NRC concluded that the Seabrook station design satisfies IEEE 279 and GDC 24, Separation of Protection and Control Systems.

10 CFR 54.4(a)(2) requires that all non-safety systems, structures and components whose failure could prevent satisfactory accomplishment of any of the safety related functions discussed in 10 CFR 54.4(a)(1) (i), (ii) or (iii) be included in the scope of license renewal.

Since these turbine steam stop valve limit and fluid pressure switches perform no safety function, are not credited in the accident analysis and meet Seabrook Station CLB for preventing interactions from propagating back into the RPS, they cannot prevent satisfactory accomplishment of any of the safety related functions discussed in 10 CFR 54.4(a)(1). Therefore the requirements of 10 CFR 54.4(a) (2) are not applicable.

Turbine Steam Dump Valve Air Supply Solenoid Valves

The Steam Dump System dump valve, A and B solenoids are classified as safety related and Class IE.

The automatic steam dump system is able to accommodate a load rejection and reduce the effects of the transient imposed upon the Reactor Coolant System. By bypassing main steam directly to the condenser, an artificial load is thereby maintained on the primary system. The Rod Control System can then reduce the reactor temperature to a new equilibrium value without causing over temperature and/or overpressure conditions. The nominal steam dump design steam flow capacity is 40 percent of full load steam flow at full load steam pressure. There are twelve steam dump valves. The A and B solenoids are de-energized to block opening of the dump valve on a low-low T_{avg} condition in two of the four reactor coolant loops.

If the difference between the reference T_{avg} (T_{ref}) based on turbine impulse chamber pressure and the lead/lag compensated average T_{avg} exceeds a predetermined amount, and the interlock mentioned below is satisfied, a demand signal will actuate the steam dump to maintain the reactor coolant system temperature within control range until a new equilibrium condition is reached. The Steam Dump Valves fail close on loss of air or loss of control signal.

While these solenoid valves are classified as safety related, UFSAR section 10.4.4.3, Safety Evaluation states: "The Steam Dump System is not essential to the safe operation of the plant. It is provided for flexibility of operation." Also section 10.4.4.3 states: "No effects of pipe breaks are considered, since all piping is located in the Turbine Building where the effects of pipe breaks will not jeopardize the safe shutdown of the plant."

"The pressurizer safety valves and steam generator safety valves are, however, sized to protect the RCS and steam generator against overpressure for all load losses without assuming the operation of the Steam Dump System, pressurizer spray, pressurizer power-operated relief valves, automatic rod cluster control or direct reactor trip on turbine trip." (UFSAR 15.2.2.1)

"In addition, no credit is taken for steam dump."(UFSAR 15.2.3.2.a)

The solenoids for the Steam Dump System dump valves are classified as Class IE and safety related. The design criteria applied to the turbine stop valve limit switches and turbine hydraulic pressure sensors was also applied to the steam dump valve solenoids. The response to RAI 420.21 identifies that "these circuits and sensors (solenoids) used in a non-seismic structure on (are) Class IE and are run in separate conduit meeting Regulatory Guide 1.75 with the exception of seismic qualification." This commitment addressed the potential for credible faults or failures on circuits/components in the turbine building degrading RPS performance. This position was found to be acceptable by the NRC in NUREG-0896, "Safety Evaluation Report related to the operation of Seabrook station Units 1 and 2" March 1983. In section 7.2.3 the NRC concluded that the Seabrook station design satisfies IEEE 279 and GDC 24, Separation of Protection and Control Systems.

10 CFR 54.4(a)(2) requires that all non-safety systems, structures and components whose failure could prevent satisfactory accomplishment of any of the safety related functions discussed in 10 CFR 54.4(a)(1) (i), (ii) or (iii) be included in the scope of license renewal.

Since these Steam Dump system solenoids perform no safety function, are not credited in the accident analysis and meet Seabrook Station CLB for preventing interactions from propagating back into the RPS, they cannot prevent satisfactory accomplishment of any of the safety related functions discussed in 10 CFR 54.4(a)(1). Therefore the requirements of 10 CFR 54.4(a) (2) are not applicable.

Feedwater Flow Control and Bypass Valve Position Switches

The Feedwater Regulating and Bypass Valve position switches located in the non-seismic Turbine Building are classified as safety related and Class IE.

The Feedwater Regulating and Bypass valve position indicating lights provide position information to the Status Monitoring Panel in the Control Room.

These valves are not credited for containment isolation. These position indicators for these valves are not listed in UFSAR table 7.5-1, "Accident Monitoring Instrumentation List" or table 7.5-2, "Control Room Indicators and/or Recorders Available to the Operator to Monitor Significant Plant Parameters During Normal Operation Including Operational Occurrences".

Although these components and circuits do not interface with either the RPS or the ESFAS, they are designed according to the requirements of BTP ICSB 26 with the exception of seismic qualification (RAI 420.21 response). They are run in separate conduits meeting Regulatory Guide 1.75.

10 CFR 54.4(a)(2) requires that all non-safety systems, structures and components whose failure could prevent satisfactory accomplishment of any of the safety related functions discussed in 10 CFR 54.4(a)(1) (i), (ii) or (iii) be included in the scope of license renewal.

The position switches do not perform a safety function, are not credited for Accident Monitoring, and cannot prevent satisfactory accomplishment of any of the safety related functions discussed in 10 CFR 54.4(a)(1). Therefore the requirements of 10 CFR 54.4(a) (2) are not applicable.

Feedwater Flow Control and Bypass Valve Solenoids

The Feedwater Regulating and Bypass Valve Solenoids located in the non-seismic Turbine Building are classified as safety related and Class IE and receive outputs from the Engineered Safety Actuation System (ESFAS).

These valves close on an ESFAS actuation signal to limit flow to the steam generators.

"The requirements of 10 CFR Part 50 for containment isolation are satisfied by one feedwater isolation valve in each main feedwater line, located outside the containment... These valves isolate the steam generators in the event of a steam generator tube rupture or feedwater line break, and prevent the continued input of feedwater to the Containment and resultant pressure increase in the event of a steam line rupture upstream of the main steam isolation valves." (UFSAR 10.4.7.3)

The Feedwater Regulating and Bypass Valves provide backup to the safety related feedwater isolation valves. NUREG-0896, "Safety Evaluation Report related to the operation of Seabrook Station Units 1 and 2" March 1983, section 10.4.7 states: "The pneumatically operated main feedwater isolation valves (one per steam generator)

close within 5 seconds of receipt of an ESF actuation signal. Redundant feedwater isolation is provided by the fail-closed main feedwater regulating valves and bypass valves, which serve as an acceptable backup."

Although the solenoids for the feedwater Regulating and Bypass valves are classified as safety related and Class IE, the valves themselves are classified as non-safety components .

The NRC has addressed this situation of taking credit for non-seismic valves in NUREG -0138, "Staff Discussion of Fifteen Technical Issues Listed in Attachment to November 3, 1976 Memorandum from Director to NRR Staff" Issue # 1, "Treatment of Non-Safety Grade Equipment in Evaluations of Postulated Steam Line Break Accidents."

NUREG-0138 documents the acceptability of crediting non-seismically qualified valves, turbine stop and control valves and the feedwater regulating valves as being an acceptable backup to the single failure of the safety related main steam and feedwater isolation valves during a streamline break accident. NUREG-0138 also sets forth the necessary criteria for classifying a component as being safety-related.

Although these solenoids are classified as safety related, NUREG-0138 states that "The valve closest to the steam generator on each steam line is a safety grade component and is referred to as the main steam isolation valve (MSIV). For the purposes of this discussion, a safety grade component is defined as one which is designed to seismic category I (Regulatory Guide 1.29), quality group C or better (Regulatory Guide 1.26), and is operated by electrical instruments and controls that meet IEEE-279. The remaining valves in the steam and feedwater lines are designated as non-safety grade components because they may not meet all of the above criteria."

The solenoids and circuitry are designed according to the requirements of BTP ICSB 26 with the exception of seismic qualification (RAI 420.21 response). As such, any failure or fault associated with these solenoids will not propagate back to the ESFAS and prevent the ESFAS from performing its safety function.

These valves are not credited for containment isolation but perform a non-safety related backup to the safety related feedwater water isolation function.

10 CFR 54.4(a)(2) requires that all non-safety systems, structures and components whose failure could prevent satisfactory accomplishment of any of the safety related functions discussed in 10 CFR 54.4(a)(1) (i), (ii) or (iii) be included in the scope of license renewal.

Since these feedwater regulating and bypass valve solenoids are not credited for containment isolation, are not safety related per NUREG 0138 criteria and meet the Seabrook Station CLB for preventing interactions from propagating back into the ESFAS, they cannot prevent satisfactory accomplishment of any of the safety related functions discussed in 10 CFR 54.4(a) (1).

However, since these feedwater regulating and bypass valve solenoids are credited as supporting a non-safety related backup isolation function for the feedwater isolation valves (closure of the non-safety feedwater regulating and bypass valves), the requirements of 10 CFR 54.4(a) (2) are applicable, i.e., the feedwater regulating and bypass valves must operate to support the feedwater isolation function.

Additionally, the feedwater regulating and bypass valve solenoids are in scope of license renewal as being required to support 10 CFR 54.4(a) (3), Fire Protection. The intended function for Fire Protection is pressure boundary.

Based on the above summary of scoping determinations for components classified as safety related in the turbine building, no additional components in the turbine building are considered to be within the scope of license renewal under 10 CFR 54.4(a)(1).

3. As stated above, the components located in the turbine building and classified as being safety-related in the plants equipment database do not have an intended function required to support accomplishment of any of the safety related functions discussed in 10 CFR 54.4(a)(1).

   Therefore, because all of the components located in the turbine building and classified as safety related in the plant's equipment database are not in scope for criteria 10 CFR 54.4(a)(1), there are no non-safety related components in the turbine building that are included in scope for 10 CFR 54.4(a)(2) because of their proximity to components that are in scope for 10 CFR 54.4(a)(1).

As a result of this review, the feedwater regulating and bypass valves have been brought in scope per 10 CFR 54.4(a)(2) as being credited for providing a nonsafety- related backup isolation function, functional (a)(2). Specifically, the piping and components upstream of the forgings up to an including valves 1-FW-FCV-540, -510, -520, -530, 1-FW-LV-4240, -4210, -4220, -4230, and 1-FW-V-180, -181, -182, and -183 are in scope as functional 10 CFR 54.4(a) (2)

Based on the above discussion, the following changes have been made to the Seabrook Station License Renewal Application to accommodate this change in scope:

1. In Section 3.4.2.1.6, Page 3.4-8, added new bullet after Air-Indoor Uncontrolled in the Environments Section as follows:

   - ***Air-Outdoor***

2. In Table 3.4.1, on Page 3.4-30, line item 3.4.1-28 is revised as follows:

3.4.1-28	Steel external surfaces exposed to air-indoor uncontrolled (external), condensation (external), or air-outdoor (external)	Loss of material due to general corrosion	External Surfaces Monitoring	No	Consistent with NUREG-1801 with exceptions. The External Surfaces Monitoring Program (with exceptions), B.2.1.24, will be used to manage loss of material due to general corrosion on the steel external surfaces exposed to air-indoor uncontrolled (external) in the Auxiliary Steam, Auxiliary Steam Condensate, Auxiliary Steam Heating, Condensate, Feedwater, Main Steam, and Steam Generator Blowdown systems, and general, pitting, ***and*** crevice~~, and galvanic~~ corrosion of steel external surfaces in air-outdoor (external) in the Auxiliary Steam Condensate, ***Feedwater,*** and Main Steam systems, and general, pitting, and crevice corrosion of steel external surfaces in condensation (external) in the Circulating Water System.

In the above discussion block, galvanic corrosion was removed from discussion of steel components exposed to air-outdoor since it was inadvertently listed and is not an identified aging effect for the systems listed.

3. In Table 3.4.2-6, on page 3.4-82, revised the last row as follows:

Orifice	***Leakage Boundary (Spatial)*** Pressure Boundary Throttle	Steel	Air-Indoor Uncontrolled (External)	Loss of Material	External Surfaces Monitoring Program	VIII.H-7 (S-29)	3.4.1-28	B

4. In Table 3.4.2-6, on page 3.4-83, added a new row after the 1st row as follows:

Orifice	***Leakage Boundary (Spatial)***	***Steel***	***Treated Water***	***Loss of Material***	***Water Chemistry Program*** ***One-Time Inspection Program***	***VIII.D1-8 (S-10)***	***3.4.1-4***	***A*** ***A***

5. In Table 3.4.2-6, on page 3.4-84, added a new row after the 2nd row as follows:

Piping and Fittings	***Leakage Boundary (Spatial)***	***Steel***	***Air-Outdoor (External)***	***Loss of Material***	***External Surfaces Monitoring Program***	***VIII.H-8 (S-41)***	***3.4.1-28***	***B, 2***

6. In Table 3.4.2-6, on page 3.4-90, added new note 2 (Note 1 was previously added in Letter SBK-L-10192, dated 11-15-2010, in Enclosure 2, on page 23) as follows:

2 Pitting and Crevice corrosion aging mechanisms are in addition to the aging mechanisms listed in NUREG 1801.

Request for Additional Information (RAI) 2.1-2

Background:

10 CFR 54.4, "Scope," section (a)(2), requires nonsafety-related systems, structures and components to be included within the scope of license renewal, if the failure of the nonsafety related SSC could prevent satisfactory accomplishment of functions that are the basis for the inclusion of safety-related SSCs within the scope of license renewal.

Issue:

During the scoping and screening methodology audit, performed on-site September 20-23, 2010, the staff reviewed the LRA and the applicant's 10 CFR 54.4(a) implementing documents, relative to nonsafety-related drain lines. The staff determined that the applicant had reviewed nonsafety-related drain lines in the proximity of safety-related SSCs and that the applicant concluded that the drain lines were not required to be included within the scope of license renewal in accordance with 10 CFR 54.4(a)(2). The staff determined that license renewal drawings included a note applicable to drain lines from relief valves that stated, "Lines are not liquid filled so they have no license renewal intended function and are not in scope." The following license renewal drawings provide examples of where this note has been applied:

- DF-LR20196 (Locations D-3 and D-10)
- HW-LR20056 (Locations G-10 and G-12)
- HW-LR20051 (Locations C-9, D-9, E-9, F-9, D-12 and F-12)
- HW-LR20053 (Locations B-7, B-8, B-9, D-6 and E-6)

Request:

Provide the details of the evaluation and basis for the conclusion that nonsafety-related drain lines, in the proximity safety-related SSCs, will not be fluid filled during a design basis event, the failure of which could not prevent satisfactory accomplishment of the function of safety-related SSCs, and therefore are not required to be included within the scope of license in accordance with 10 CFR 54.4(a)(2).

Describe any additional scoping evaluations performed to address the 10 CFR 54.4(a) criteria. List any additional SSCs that were included within the scope of license renewal as a result of the reviews discussed in this RAI. List the structure and component types subject to an AMR, AMR results, and aging management programs, as applicable, to be credited for managing the identified aging effects.

NextEra Energy Seabrook Response:

Seabrook Station evaluated all non-safety related systems and components located in buildings containing 10 CFR 54.4(a)(1) components. The non-safety related systems and components that contained liquid or steam and are located in buildings that contained 10 CFR 54.4(a)(1) components were included in the scope of license renewal. Based on plant and industry operating experience, Seabrook Station excluded the non-safety related SSCs containing air or gas from the scope of license renewal with the exception of portions that are attached to safety related SSCs and were required for structural support (Ref, LRA Section 2.1.2.2.3, page 2.1-15). Additionally, all supports for non-safety related SSCs in buildings with 10 CFR 54.4(a)(1) components were included in-scope of license renewal to prevent adverse interaction with safety related SSSs. This approach is consistent with the guidance provided in NEI 95-10, Rev 6, Section 5.2.2.1 as described below.

The tailpipes for the non-safety related DF and HW relief valves shown in the above listed locations are not liquid filled during normal plant operation and were evaluated in accordance with the guidance provided in NEI 95-10, Rev 6, Section 5.2.2.1, "Systems and Components Containing Air/Gas". This section of NEI 95-10 states that "*air and gas systems (non-liquid) are not a hazard to other plant equipment. Industry operating experience (such as NUREG-1801, industry tools documents, and other LRA SERs) for systems containing air/gas, has shown no failures due to aging that have adversely impacted the accomplishment of a safety function. In addition, there are no credible aging mechanisms for air/gas systems with dry internal environments. A review of site-specific operating experience should be performed to verify this assumption. The results of this site-specific review should be maintained in a retrievable and auditable form. Additionally, components containing air/gas cannot adversely affect safety-related SSCs due to leakage or spray. Therefore, these systems are not considered to be in scope for 54.4(a)(2).*"

Additionally, the above listed non-safety related DF and HW system relief valves are not designed to operate nor lift during a design basis event. Furthermore, as stated in NUREG 1800, Section A.1 (Branch Technical Position RLSP-1), the applicable aging effects to be considered for license renewal include those that could result from normal plant operation, including plant/system operating transients and plant shutdown. Specific aging effects from abnormal events need not be postulated for license renewal.

As stated above, as part of the integrated plant evaluation for license renewal, Seabrook Station determined that the normal internal environment for the downstream piping or tailpipes from the non-safety related relief valves is air-indoor uncontrolled. This decision was based on the conclusion that the subject relief valves were designed to limit potential over pressurization of the piping system, which is an extremely rare occurrence, if any at all. The valve set-points are rarely challenged, and therefore, it is a rare occurrence for a relief valve to lift. If a relief valve was to relieve and the downstream pipe become wetted, the pipe would dry over time and return to the air-indoor uncontrolled normal

environment. Additionally, none of these relief valves are being utilized as a pressure control valve and therefore, the normal internal environment for the subject tail pipes is air-indoor uncontrolled (non-liquid).

Request for Additional Information (RAI) 2.1-3

Background:

10 CFR 54.4, "Scope," section (a)(2), requires nonsafety-related systems, structures and components to be included within the scope of license renewal, if the failure of the nonsafety related SSC could prevent satisfactory accomplishment of functions that are the basis for the inclusion of safety-related SSCs within the scope of license renewal.

Issue:

LRA Section 2.1.2.2.1, "Current Licensing Basis (CLB) Topics," states that "Internal flooding features are associated with the equipment and floor drainage system, including sumps, sump pumps, tanks, drains and piping, to remove water from potential internal flooding events, and fire protections activities for areas containing safety-related equipment. These design features are in-scope for license renewal."

During the scoping and screening methodology audit, performed on-site September 20-23, 2010, the staff reviewed the LRA and the applicant's 10 CFR 54.4(a) implementing documents, relative to nonsafety-related sump pumps. The staff noted that the license renewal implementing documents state that nonsafety-related sump pumps that are located in a sump are not included within the scope of license renewal if there is a cover over the sump preventing the pump from spatially interacting with safety-related equipment.

Request:

Provide the details of the evaluation and basis for the conclusion that the failure of nonsafety-related sump pumps, in the proximity safety-related SSCs could not prevent satisfactory accomplishment of the function of safety-related SSCs and, therefore, are not required to be included within the scope of license in accordance with 10 CFR 54.4(a)(2).

If credit is taken for mitigative features, provide the evaluation and basis for the conclusion that mitigative features are adequate to prevent the failure of nonsafety-related sump pumps from impacting the ability of safety-related SSCs to perform their intended functions and whether the mitigative features are included within the scope of license in accordance with 10 CFR 54.4(a)(2).

Describe any additional scoping evaluations performed to address the 10 CFR 54.4(a) criteria. List any additional SSCs that were included within the scope of license renewal as a result of the reviews discussed in this RAI. List the structure and component types subject to an AMR, AMR results and aging management programs, as applicable, to be credited for managing the identified aging effects.

NextEra Energy Seabrook Response:

The sump pumps that are located in sumps that have a bolted down solid sump cover are not within the scope of license renewal for 10 CFR.54(a)(2). In these cases, the mitigative approach was utilized as the bolted down solid plate would prevent liquid spray from components inside the sump. Steel or stainless steel sump cover plates that are fixed in place are considered part of the building structure and age managed under the Structures Monitoring Program, B.2.1.31, as part of the carbon steel or stainless steel commodity grouping.

All sump locations were reviewed to ensure that this approach was applied consistently. This review identified that four sumps did not have a solid sump cover. Therefore, the sump pumps and piping inside these sumps were brought into the scope for License Renewal. These sumps are located in the East and West Main Steam and Feedwater Pipe Chases and Intake and Discharge Transition Structures. On LRA drawing PID-1-DF-LR20200, sump pumps P-51A, P-51B, P-267A, P-267B, P-268A, and P-268B and associated piping in the sumps should have been colored Green instead of Black.

The above listed four pumps are not utilized to mitigate internal flooding events. The non-safety related sump pumps, piping, and valves that are necessary to mitigate the effects of internal flooding events and fire protection activities in areas containing safety related equipment are in scope of license renewal for 10 CFR.54(a)(2) or 10 CFR.54(a)(3) regardless of the type of sump covers they have.

Based on the above discussion, the following changes have been made to the LRA:

1. In Section 2.3.3.26, on page 2.3-192, the following paragraphs are revised as follows:

   West Main Steam and Feedwater Pipe Chase
   PID-1-DF-LR20200, PID-1-DR-LR20633, PID-1-SD-LR20402:

   The West Main Steam and Feedwater floor drain portion of the system begins with the ~~discharge piping of the~~ two west pipe chase pumps ***and the discharge piping*** ~~as they exit~~***in*** the sump. The pipes continue through two check valves, isolation valves and connected drain valves to join in a single line continuing to the Emergency Feedwater Pump House roof where the boundary joins the roof drain system. The boundary ends as the piping exits the building and enters the storm drain system.

East Main Steam and Feedwater Pipe Chase
PID-1-DF-LR20200, PID-1-SD-LR20402:

The East Main Steam and Feedwater Pipe Chase portion of the system begins with the ~~discharge piping of the~~ two east pipe chase pumps ***and the discharge piping*** ~~as they exit~~ ***in*** the sump. The pipes continue through two check valves, isolation valves and connected drain valves to join in a single line continuing to the yard storm drains where the boundary ends.

Intake and Discharge Transition Structures
PID-1-DF-LR20200:

The Intake and Discharge Transition Structure portions are similar, each beginning with the ***intake and discharge structures sump pumps and the discharge*** piping ~~as it exits~~***in*** the sump and includes a check and isolation valve and piping ending as it exits the building's exterior wall.

2. On page 3.2-30, in Table 3.2.1, Item number 3.2.1-50 is revised as follows:

3.2.1-50	Aluminum piping, piping components, and piping elements exposed to air-indoor uncontrolled (internal/external)	None	None	NA - No AEM or AMP	Consistent with NUREG-1801. Components in the Control Building Air Handling, Diesel Generator, Fire Protection, Instrument Air, Miscellaneous Equipment, Feedwater, ~~and~~ Main Steam, ***and Plant Floor Drain*** systems have been aligned to this line item based on material, environment, and aging effect. Aluminum piping components exposed to air-indoor uncontrolled (internal/external) are contained in the Fire Protection system. Aluminum piping components exposed to air-indoor uncontrolled (external) are contained in the Diesel Generator, Instrument Air, Miscellaneous Equipment, Feedwater, ~~and~~ Main Steam, ***and Plant Floor Drain*** systems. Aluminum heat exchanger components exposed to air-indoor uncontrolled (external) are contained in the Control Building Air Handling and Instrument Air systems. Aluminum fan housing exposed to air-indoor uncontrolled (internal/external) is contained in the Control Building Air Handling system. The Engineering Safety Features systems do not contain aluminum piping, piping components, and piping elements exposed to air-indoor uncontrolled (internal/external).

3. In Section 3.3.2.1.26, on page 3.3-41, added the following new bullet under the Materials section as follows:

   - ***Aluminum***

4. On page 3.3-109, in Table 3.3.1, line Item 3.3.1-62 is revised as follows:

3.3.1-62	Aluminum piping, piping components, and piping elements exposed to raw water	Loss of material due to pitting and crevice corrosion	Fire Protection	No	***Components in the Plant Floor Drain System have been aligned to this item number based on material, environment and aging effect*** ***Consistent with NUREG-1801 with exceptions. The Inspection of Internal Surfaces in Miscellaneous Piping and Ducting Components Program (with exceptions), B.2.1.25, will be substituted to manage loss of material due to pitting and crevice corrosion, and in addition the aging effect of microbiologically influenced corrosion and galvanic corrosion in the aluminum components exposed to raw water.*** ~~Not applicable at Seabrook Station. There are no aluminum piping components exposed to raw water in the Auxiliary Systems at Seabrook Station~~

5. On page 3.3-391, in Table 3.3.2-26, added the following new rows after the 5th row:

Pump Casing	***Leakage Boundary (Spatial)***	***Aluminum***	***Air-Indoor Uncontrolled (External)***	***None***	***None***	***V.F-2 (EP-3)***	***3.2.1-50***	***A***
Pump Casing	***Leakage Boundary (Spatial)***	***Aluminum***	***Raw Water (Internal)***	***Loss of Material***	***Inspection of Internal Surfaces in Miscellaneous Piping and Ducting Components Program***	***VII.G-8 (AP-83)***	***3.3.1-62***	***E, 2***

Request for Additional Information (RAI) 2.2-1

Background:

LRA Section 2.1 describes the scoping and screening methodology used and the criteria for determining whether systems or components. are in scope for license renewal. The results of the implementation of the scoping methodology are provided in Tables 2.2-1, "Systems and Structures within the Scope of License Renewal," and 2.2-2, "Systems and Structures Not in the Scope of License Renewal."

Issue:

The applicant indicates in LRA Section 2.3.3.45 that the waste process building is not in scope for license renewal. However, in LRA Section 2.4.5, the applicant states that the waste process building is in scope for Title 10 of the *Code* of *Federal Regulations* (10 CFR) 54.4(a)(1), 10 CFR 54.4(a)(2), and 10 CFR 54.4(a)(3) and is included in Table 2.2-1.

Request:

The staff requests that the applicant clarify if the waste process building is in scope of license renewal.

NextEra Energy Seabrook Response:

The Waste Process Building is in scope for License Renewal and therefore, the following change has been made to the LRA.

In Section 2.3.3.45, on page 2.3-270, Item 5 is revised as follows:

5. Waste Processing Building ~~(not in scope for License Renewal)~~:

Request for Additional Information (RAI) 2.3-01

Background:

LRA Section 2.1 describes the applicant's scoping methodology, which specifies how systems or components were determined to be included in scope of license renewal. The staff confirms the inclusion of all components subject to an AMR by reviewing the results of the screening of components within the license renewal boundary.

Issue:

For the drawing locations identified in the table below, the continuation of piping in scope for license renewal could not be found.

License Renewal Application (LRA) Section / Drawing Number & Location	Continuation Issue
2.3.3.2 Boron Recovery System	
PID-1-CS-LR20724, F-12	A section of 10 CFR 54.4 (a)(2) piping (to Boron Recovery Primary Drain tank) continuing to drawing LR20854, location D-3.
2.3.3.41 Valve Stem Leak-off System	
PID-1-VSL LR20776, F-4 & F-11	Four vent pipelines in each location within scope of 10 CFR 54.4 (a)(2), without a continuation note provided.
2.3.4.2 Auxiliary Steam Condensate System	
PID-1-ASC-LR20912, D-7	$1^1/_2$" overflow line after the tank TK-280 ends without

	a continuation note provided.
2.3.4.6 Feedwater System	
PID-1-FW-LR20690, B-10	1" line after valve V403 ends without a continuation note provided.
PID-1-FW-LR20690, D-10	1" line after valve V402 ends without a continuation note provided.
PID-1-FW-LR20690, F-10	1" line after valve V401 ends without a continuation note provided.
PID-1-FW-LR20690, H-10	1" line after valve V400 ends without a continuation note provided.
2.3.4.7 Main Steam System	
PID-1-MS-LR20583, C-11	Main Steam Isolation valve actuator to valve V90 hydraulic inlet and outlet continuation drawings (FP23003 sht. 9 & 13) were not provided.
PID-1-MS-LR20583, E-11	Main Steam Isolation valve actuator to valve V88 hydraulic inlet and outlet continuation drawings (FP23003 sht. 9 & 13) were not provided.
PI D-1-MS-LR20583, F-11	Main Steam Isolation valve actuator to valve V86 hydraulic inlet and outlet continuation drawings (FP23003 sht. 9 & 13) were not provided.
PID-1-MS-LR20583, H-11	Main Steam Isolation valve actuator to valve V92 hydraulic inlet and outlet continuation drawings (FP23003 sht. 9 & 13) were not provided.
2.3.4.8 Steam Generator Blowdown System	
PID-1-SB-LR20626, C-5	1" line after valve V76 ends without a continuation note provided.
PID-1-SB-LR20626, E-7	1" line after valve V77 ends without a continuation note provided.

Request:

The staff requests that the applicant provide sufficient information for the continuation issues identified above to permit the staff to review all portions of the systems within the license renewal boundary.

NextEra Energy Seabrook Response:

1. Continuation Issue related to Section 2.3.3.2, Boron Recovery System, PID-1-CS-LR20724, F-12 [a section of 10 CFR 54.4 (a)(2) piping (to Boron Recovery Primary Drain tank) continuing to drawing LR20854, location D-3].

   The continuation of the line on LRA drawing PID-BRS-LR20854 should be G-12 (just prior to the seismic anchor) instead of D-3.

2. Continuation issue related to Section 2.3.3.41, Valve Stem Leak-off System, PID-1-VSL LR20776, F-4 & F-11 (four vent pipelines in each location within scope of 10 CFR 54.4 (a)(2), without a continuation note provided).

   The four lines in question on LRA drawing PID-1-VSL LR20776, at locations F-4 and F-11, without any continuation drawings listed, are associated with instrumentation vent tubing for flow indication switches 1-CC-FISL-2114, 2116, 2214, and 2216. These instruments are depicted on PID-1-CC-LR-20207 at location F-10 and D-10 and PID-1-CC-LR20213 at location F-5 and D-5. Instrumentation details are normally not shown on the PIDs. However, instrument tubing and valves for these flow indicating switches are in scope of license renewal as a commodity.

3. Continuation issue related to Section 2.3.4.2, Auxiliary Steam Condensate, PID-1-ASC-LR20912, D-7 (1½" overflow line after the tank TK-280 ends without a continuation note provided)

   The overflow line for ASC-TK-280 goes to a nearby floor drain and therefore, there is no continuation drawing. All of the overflow line is in scope of license renewal.

4. Continuation issue related to 2.3.4.6, Feedwater System, PID-1-FW-LR20690, B-10, D-10, F-10, H-10 (1" lines after valve FW-V-400, 401, 402 and 403 ends without a continuation note provided).

   The piping downstream of FW-V-400, 401, 402, and 403 go to a nearby floor drain and therefore, there are no continuation drawings. All of the piping downstream of FW-V-400, 401, 402 and 403 is in scope of license renewal.

5. Continuation issue related Section 2.3.4.7, Main Steam System, PID-1-MS-LR20583, C-11, E-11, F-11, and H-11 (Main Steam isolation valve actuator to valves MS-V-86, V-88, V-90 and V-92 hydraulic inlet and outlet continuation drawings (FP23003 sht. 9 & 13) were not provided)

   FP23003 sheet 7 and 9 is part of a vendor manual for the Main Steam isolation valve actuators. The vendor drawings were not provided as part of the License Renewal boundary drawings. However, the components within the actuators' hydraulic fluid path were included within the scope of License Renewal.

6. Continuation issue related to Section 2.3.4.8, Steam Generator Blowdown System, PID-1-SB-LR20626, C-5 and E-7 (1" lines after valves V-76 and V-77 end without a continuation note provided.

The piping downstream of SB-V-76 and 77 go to a nearby floor drain and therefore, there are no continuation drawings. All of the piping downstream of valves SB-V-76 and V-77 is in scope of license renewal.

Request for Additional Information (RAI) 2.3.3.2-01

Background:

In LRA Section 2.1.2.2.2, the applicant states that nonsafety-related SSCs attached to safety-related SSCs are in scope of license renewal for 10 CFR 54.4(a)(2) up to the first seismic anchor beyond the safety/nonsafety interface.

Issue:

The applicant depicts on LRA drawing PID-1-CS-LR20724, at location G-11, a section of safety-related 3" piping connected to nonsafety-related 3" piping at valve V633. The piping section, located between valve V633 and the seismic anchor located at G-9, is in scope of license renewal for 10 CFR 54.4(a)(2). However, there is a 1" line that connects to the 3" nonsafety-related piping between valve V633 and the seismic anchor. This line continues and connects to a 3" piping section, which connects into a 3" line and $^3/_4$" line at location E-9. At location D-12 of LRA drawing PID-1-CS-LR20724, the 3" line continues through valves V634, V635, V636 to a piping section that continues to LRA drawing PID-1-BRS-LR20856. This piping section is not depicted in scope of license renewal. Additionally, at location D-12 of LRA drawing PID-1-CS-LR20724, the $^3/_4$" line continues through valve V835 to LRA drawing PID-1-SS-LR20519. Seismic anchors could not be located between the start of the 1" line (at location G-9 on LRA drawing PID-1-CS-LR20724) and the 3" and $^3/_4$" continuations (at location D-12 on LRA drawing PID-1-CS-LR20724).

Request:

The staff requests that the applicant provide the location of the first seismic anchors on nonsafety-related piping past the safety/non-safety interface for the above locations.

NextEra Energy Seabrook Response:

On LRA drawing PID-1-CS-LR20724, the identified pipe support anchors, 303-A-01 and 302-A-20, are the first seismic anchors beyond the safety/non-safety interface provided to ensure that failure in the non-safety related piping does not propagate into and render the safety related portion of the piping unable to perform its intended safety function. Anchor 302-A-20 is physically located at the tee intersection of the BRS and CS system piping. Due to its location (the attachment point of the one inch nominal diameter piping is located within approximately one foot of the anchor restraint boundary) this anchor

equally restrains the one inch pipe run. To ensure adequate protection of the safety related piping, as a preventative option, the entire non-safety related piping is subject to aging management (highlighted in green) until the piping exits the Primary Auxiliary Building and enters the Waste Process Building as depicted on LR Note 1. This being the case, subsequent interface anchor(s) need not be identified.

Request for Additional Information (RAI) 2.3.3.12-01

Background:

In LRA Section 2.1.3, the applicant states that its screening process was used to identify the passive, long-lived structures and components in the scope of license renewal and subject to AMR. The staff confirms inclusion of all components subject to an AMR by reviewing component types within the license renewal boundary.

Issue:

The applicant depicts on LRA drawings PID-1-DG-LR20460 and PID-1-DG-LR20465, at location F-10, a pulsation damper and cooling pipe in scope of license renewal for 10 CFR 54.4(a)(1). The same LRA drawings, at location B-7, depict upper and lower barring gear interlock components in scope of license renewal for 10 CFR 54.4(a)(1). However, none of the above components were included in LRA Table 2.3.3-12, "Diesel Generator Components Subject to Age Management Review."

Request:

The staff requests that the applicant justify the exclusion of these (a)(1) components from LRA Table 2.3.3-12.

NextEra Energy Seabrook Response:

The pulsation damper is in scope of license renewal and was grouped under component type "piping and fittings" in Table 2.3.3-12.

The cooling pipe is in scope of license renewal and was grouped under component type "piping and fittings" in Table 2.3.3-12.

The upper and lower bearing gear interlock components are in scope of license renewal and were grouped under component type "valve body" in Table 2.3.3-12.

Request for Additional Information (RAI) 2.3.3.19-01

Background:

LRA Section 2.1 describes the applicant's scoping methodology, which specifies how systems or components were determined to be included in scope of license renewal. The staff confirms the inclusion of all components subject to an AMR by reviewing the results of the screening of components within the license renewal boundary.

Issue:

On LRA drawing PID-1-HW-LR20051, the applicant depicts $^1/_2$" vent lines, at locations G-11 and G-12 respectively, attached to the hot water heating system expansion tanks, which are in scope of license renewal for 10 CFR 54.4(a}(2}. The $^1/_2$" vent lines are shown not in scope of license renewal. The staff is concerned with conditions where the vent lines are liquid filled during a design basis event.

Request:

The staff requests that the applicant justify the exclusion of the $^1/_2$" vent lines from scope of license renewal.

NextEra Energy Seabrook Response:

The ½" vent lines on LRA drawing PID-1-HW-LR20051, at locations G-11 and G-12 are in scope of license renewal for 10 CFR 54.4(a)(2) and should have been colored Green instead of Black. These lines are actually ½" carbon steel piping with threaded plugs at the end and not vent lines. This is a drawing change only and does not affect the text or tables in the LRA.

Request for Additional Information (RAI) 2.3.3.19-02

Background:

LRA Section 2.1 describes the applicant's scoping methodology, which specifies how systems or components were determined to be included in scope of license renewal. The staff confirms the inclusion of all components subject to an AMR by reviewing the results of the screening of components within the license renewal boundary.

Issue:

The applicant depicts on LRA drawing PID-1-HW-LR20056, location G-11, a make-up tank that is not in scope of license renewal but is connected to nonsafety-related piping that is in scope of licenses renewal for 10 CFR 54.4(a}(2). The staff is concerned with conditions where the makeup tank is liquid filled. Therefore, the failure of the make-up tank when it is liquid-filled during a design basis event is required to be considered.

Request:

The staff requests that the applicant justify its exclusion of the make-up tank from scope of license renewal for 10 CFR 54.4(a)(2).

NextEra Energy Seabrook Response:

As described in LRA Section 2.3.3.19, on page 2.3-165, in the boundary description for PID-1-HW-LR20056, the make-up tank (TK-157) is in scope of license renewal and should have been colored Green instead of Black on LR drawing PID-1-HW-LR20056.

Request for Additional Information (RAI) 2.3.3.20-01

Background:

LRA Section 2.1 describes the applicant's scoping methodology, which specifies how systems or components were determined to be included in scope of license renewal. The staff confirms the inclusion of all components subject to an AMR by reviewing the results of the screening of components within the license renewal boundary.

Issue:

The applicant depicts on LRA drawing PID-1-IA-LR20637, at location G-3, 1" piping in scope of license renewal for 10 CFR 54.4(a)(3) that continues on LRA drawing PID-1-IA-LR20638, at location E-12. On LRA drawing PID-1-IA-LR20638, the 1" piping is not shown in scope of license renewal.

Request:

The staff requests that the applicant justify the exclusion of the 1" piping from scope of license renewal on LRA drawing PID-1-IA-LR20638.

NextEra Energy Seabrook Response:

The Loop A piping that is colored Red on LRA drawing PID-1-IA-LR20638 is in scope of license renewal for 10 CFR54.4(a)(3) as stated in LR Note 1 on the drawing. The Loop B Instrument Air piping shown on LRA drawing PID-1-IA-LR20638 is excluded from the scope of license renewal because the system design utilizes check valves to prevent back flow into the Loop A header (Ref. LR Note 4 on LRA drawing PID-1-IA-LR20638). These check valves form the pressure boundary for the Instrument Air system on this drawing. The 1" piping coming from Instrument Loop B header as shown on LR drawing PID-1-IA-LR20638 is correct in showing that Loop B is not in scope. The instrumentation details are normally not shown on the PIDs. However, these check valves are in scope of license renewal as a commodity.

There's also a backflow check valve on LRA drawing PID-1-LR20638, at location E-12 similar to the other check valves shown on this drawing with LR Note 4. This backflow check valve is located on the 1" line between the air filter (downstream of IA-V-457) and the continuation flag 'E' to drawing PID-1-IA-LR20637. This one inch line should have been marked with LR Note 4 and the line downstream of this note should have been colored Red.

The Red colored piping on PID-1-IA-LR20637, at location G-3, coming from LR drawing PID-1-IA-LR20638, at location E-12, is correct.

Request for Additional Information (RAI) 2.3.3.20-02

Background:

LRA Section 2.1 describes the applicant's scoping methodology, which specifies how systems or components were determined to be included in scope of license renewal. The staff confirms the inclusion of all components subject to an AMR by reviewing the results of the screening of components within the license renewal boundary.

Issue:

The staff identified the following issues on LRA drawing PID-1-IA-LR20643:

- At locations F-8 and F-9, no continuation piping was identified between the check valve V531, which is depicted in scope of license renewal for 10 CFR 54.4(a)(1), and the seismic anchor.
- At locations E-8 and F-8, portions of 2" piping near valves (V533 and V535) are shown in scope of license renewal for 10 CFR 54.4 (a)(3). However, the pipe sections upstream of these valves and to the seismic anchors are shown not in scope of license renewal.

- At locations E-8 and F-8, the piping associated with the seismic anchors could not be identified on the drawing.
- At location E-8, there is a line whose beginning and end are not identified.

Request:

The staff requests that the applicant provide the following on LRA drawing PID-1-IA-LR20643:

- Identification of the continuation piping that is missing between the check valve V531 and seismic anchor at locations F-8 and F-9.
- Justification for excluding the continuation piping between valves V533 and V535 and the seismic anchors from scope of license renewal at locations E-8 and F-8.
- Identification of the missing continuation piping associated with the seismic anchors at locations E-8 and F-8.
- Identification of the missing continuation of the piping whose beginning and end are not identified.

NextEra Energy Seabrook Response:

The following detail was inadvertently left out of the LR boundary drawing PID-1-IA-LR20643.

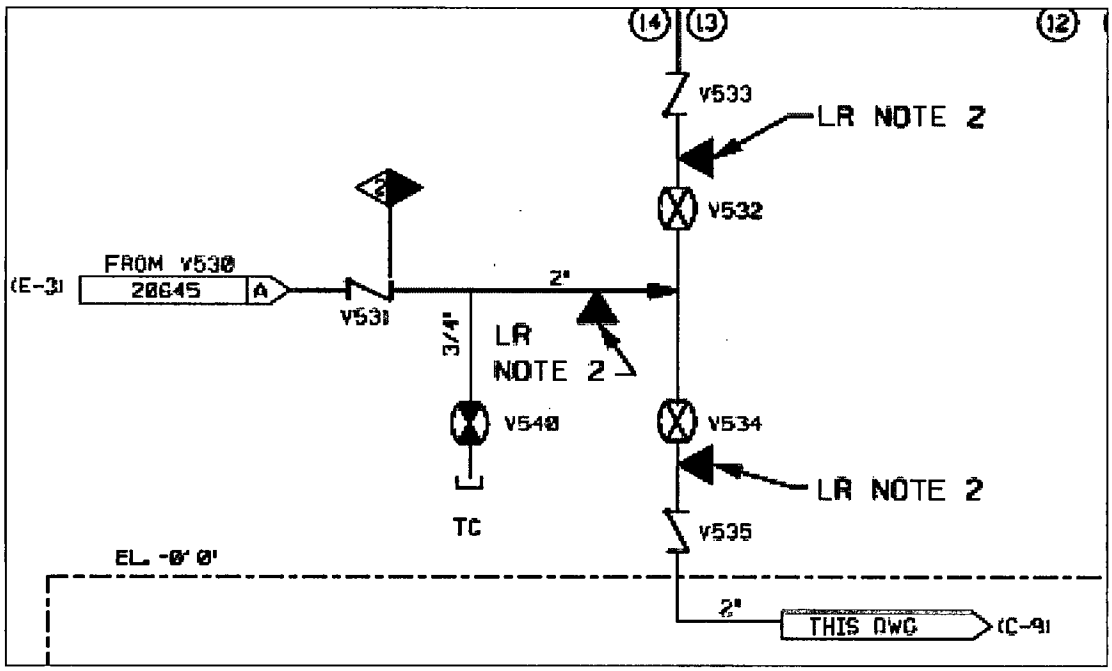

The piping downstream of IA-V-531, including valves IA-V-540, 532, & 534 and piping downstream of IA-V-532 and 534 up to the seismic supports are in scope of license renewal for 10 CFR 54.4(a)(2). The tail pipe downstream of non-safety related valve IA-V-540 is not in scope of license renewal (i.e. colored black) because it is not liquid filled. The above listed components were already included in the LRA Tables and therefore, no changes are required to the LRA.

Request for Additional Information (RAI) 2.3.3.20-03

Background:

In LRA Section 2.1.2.2.2, the applicant indicates that nonsafety-related SSCs attached to safety-related SSCs are in scope of license renewal up to the first seismic anchor beyond the safety/nonsafety interface.

Issue:

During its review of the instrument air system LRA drawings, the staff could not locate seismic anchors on the following nonsafety-related lines.

Non-Safety/Safety Interface Location	Description
PI D-1-IA-LR20647, location B-11	1" line connected to valve V8031
PID-1-IA-LR20647, location D-11	1" line connected to valve V8032
PID-1-IA-LR20647, location F-9	$^1/_2$" T line connected to valve MS-PV-3002-V4
PID-1-IA-LR20647, location H-9	$^1/_2$" T line connected to valve IVlS-PV-3002-V4F
PID-1-IA-LR20647, location F-4/5	$^1/_2$" T line connected to valve PY 3003-1
PID-1-IA-LR20647, location F-4/5	$^1/_2$" T line connected to valve PY 3003-2
PID-1-IA-LR20647, location H-4/5	$^1/_2$" T line connected to valve PY 3004-1
PI D-1-IA-LR20647, location H-4/5	$^1/_2$" T line connected to valve PY 3004-2

Request:

The staff requests that the applicant clarify the locations of these seismic anchors for the above examples in the instrument air system.

NextEra Energy Seabrook Response:

Both the safety related and non-safety related Instrument Air piping in the Primary Auxiliary Building are seismically supported. No physical anchors exist; rather a series of pipe supports exist.

The non-safety related ½ inch diameter tubing noted in LRA drawing PID-1-IA-LR20647, at locations F-9, H-9, F-4/5 and H-4/5 are anchored by the associated instruments. For example, the interface at MS-V-550 (H-10) is anchored by instruments MS-PCV-3001-2, MS-PCV-3001-1, MS-ZY-3001 (positioner), and MS-PY-3001-2 all of which are rigidly mounted.

The non-safety related Instrument Air piping off of valves IA-V-8032 (D-11) and 8031 (B-11) does not contain seismic anchors. The extent of continued piping and its pipe supports provide structural support for the safety to non-safety interface and ensure that non-safety piping loads are not transferred through the interface as determined by the piping stress analysis.

Request for Additional Information (RAI) 2.3.3.22-01

Background:

LRA Section 2.1 describes the applicant's scoping methodology, which specifies how systems or components were determined to be included in scope of license renewal. The staff confirms the inclusion of all components subject to an AMR by reviewing the results of the screening of components within the license renewal boundary.

Issue:

On LRA drawing PID-1-DM-LR20353, at location H-3, the applicant refers to LR Note 1, which indicates that pump SF-P-272 is the only component in Table 1 that is in scope of license renewal for 10 CFR 54.4(a)(2). Table 1 also provides the LRA drawing location of pump SF-P-272. However, on LRA drawing PID-1-SF-LR20484, pump SF-P-272 is not depicted in scope of license renewal.

Request:

The staff requests that the applicant clarify the scoping results for pump SF-P-272 as described on LRA drawing PID-1-DM-LR20353 and depicted on LRA drawing PID-1-SF-LR20484.

NextEra Energy Seabrook Response:

The Refueling Canal Skimmer pump, SF-P-272, is a non-safety related pump and is in operation only during refueling outages when the refueling pool and canal are flooded.

LRA drawing PID-1-DM-LR20353, LR Note 1 refers to the mechanical seal supply system piping going to the Refueling Canal Skimmer pump, SF-P-272. The Note is not intended to imply that the pump itself is in-scope. The mechanical seal is considered to be a short lived item (PID-1-DM-LR20353, LR Note 2) and not in-scope for License Renewal. The Mechanical Seal Supply piping to the pump mechanical seal in containment is stainless steel in a treated water internal environment. This piping is in scope of license renewal for 10 CFR 54.4(a)(2).

This pump and associated Spent Fuel piping is drained during normal power operation, and, with the exception of the piping segments noted below, are not in-scope for License Renewal.

Piping downstream of SF-P-272 is attached to ASME Code Class 2 piping at the containment penetration. The piping between the Class 2 boundary and the designated anchor is in-scope for 10 CFR 54.4(a)(2).

The non-safety related pump, SF-P-272, and associated piping beyond that anchor point have no License Renewal functions and are not in-scope as correctly noted on LRA drawing PID-1-SF-LR20484, Note 1. As stated above, SF-P-272 and associated piping are drained and have an internal environment of air/gas during normal power operation and therefore, excluded from the scope of license renewal for 10 CFR 54.4(a)(2) in accordance with the guidance provided in NEI 95-10, Rev 6, Section 5.2.2.1, "Systems and Components Containing Air/Gas".

Request for Additional Information (RAI) 2.3.3.26-01

Issue:

LRA section 2.3.3.26 provides an Updated Final Safety Analysis Report (UFSAR) reference of Appendix A, Section F.3, Page 41. However, the reference could not be located in the UFSAR that was submitted to the staff along with the LRA.

Request:

The staff requests that the applicant provide the UFSAR reference for Appendix A, Section F.3, Page 41 so that the staff can confirm that the components included in the plant floor drain system have been appropriately identified and included within the scope of license renewal.

NextEra Energy Seabrook Response:

The following reference information is provided from UFSAR Appendix A, Section F.3:

SEABROOK STATION	Evaluation and Comparison to BTP APCSB 9.5-1, Appendix A Responses To BTP APCSB 9.5-1	Revision 11 Section F.3 Page 41

APCSB 9.5-1, App. A

Page Paragraph

15 D.1 (i)

Building Design - Floor Drains

Floor drains, sized to remove expected fire fighting water flow should be provided in those areas where fixed water fire suppression systems are installed. Drains should also be provided in other areas where hand hose lines may be used if such fire fighting water could cause unacceptable damage to equipment in the area. Equipment should be installed on pedestals, or curbs should be provided as required to contain water and direct it to floor drains (see NFPA 92M "Waterproofing and Drainage of Floors"). Drains in areas containing combustible liquids should have provisions for preventing the spread of the fire throughout the drain system. Water drainage from areas which may contain radioactivity should be sampled and analyzed before discharge to the environment.

Response

Floor drains are located in those areas where automatic sprinkler and spray systems are installed. These drains are sized to pass the expected flows resulting from automatic system actuation, as well as that produced by manual hose application if employed.

In areas where hand hose lines are the only water sources utilized to combat a fire, drains are provided if accumulation of fire fighting water could result in unacceptable damage to safety-related equipment in the area. In such areas, the operator can use the hose to control the quantity of drain water to avoid unacceptable damage to equipment.

Water drainage from buildings with potential for radioactive contamination will be routed to the waste processing building, where it is sampled and analyzed for radioactivity.

Drainage within the diesel generator building is designed to prevent the spread of fire from one area to another. Other areas with combustible liquids have normally closed shut-off valves in the drain lines or drain directly to the oil/water separation vault.

A fire in the primary auxiliary building, should it occur, may require large amounts of fire fighting water, which could result in the PAB floor drain sump overflowing and spilling over into the pipe tunnel between the vault area and the containment building. The combined pipe tunnel area and the PAB sump can hold up to 14,000 gallons of fire fighting water. Water in excess of this would overflow into the vault No. 2 floor drain sump. This contained water would not jeopardize the operability of safety-related equipment and equipment required for a safe plant shutdown. Contaminated drainage is processed through the liquid waste system. Sump pumps located in the affected areas pump water at a nominal rate of 25 gpm per pump to the floor drain tanks in the waste processing building. Provisions for sample analysis is available at the waste test tank prior to discharge to the environment.

In the event of a fire in either the waste processing building or the fuel storage building, the fire fighting water could drain to the lowest elevation of the building, where it would be contained. Any resulting flooding in either building would thus not jeopardize the operability of safety-related equipment or equipment required for the safe shutdown of the plant. Sump pumps located in the affected areas pump water at a nominal rate of 25 gpm per pump to the floor drain tanks in the waste processing building.

If a fire requiring large amounts of water should occur in the containment building, there exists a possibility of flooding the reactor instrument cavity. However, the cavity can hold more than 47,000 gallons of water without jeopardizing the operability of safety-related equipment or equipment required for safe shutdown of the plant. Sump pumps located in the affected areas pump water at a nominal rate of 25 gpm per pump to the floor drain tanks in the waste processing building.

All safety-related equipment, except draw-out switchgear and local control panels are mounted on pedestals to avoid water damage, or provided with curbs or other barriers, as required, to contain the water and direct it to floor drains. The draw-out switchgear and local control panels are capable of withstanding a minimal degree of floor flooding without damage.

The electrical tunnels contain no sources of flood water other than the fire protection system piping. The fire protection system piping are zoned pre-action dry pipe systems with the zone valves located external to the tunnel areas. The individual fire protection system zones will be actuated by ionization fire detectors. Fire detectors are provided in the areas zoned to provide for local indication and for an audible and visual alarm in the control room and the guardhouse. Water from the fire protection system will be drained from the tunnel zones to a sump external to the electrical tunnel areas.

Redundant pumps have been installed in the sump to pump the water collected from the tunnel fire water drains to the storm drain system.

The electrical tunnel areas are zoned for fire protection. It is highly improbable that a fire will occur in more than one zone at any time, therefore the capacity of each pump is based on the flow of the largest tunnel zone. Each pump is connected to a redundant emergency bus. The installed pump capacity is capable of handling the flow requirements from two zones at all times except in the event of loss of power on one emergency bus.

Request for Additional Information (RAI) 2.3.3.27-01

Background:

In LRA Section 2.1.2.2.2, the applicant indicates that nonsafety-related SSCs attached to safety-related SSCs are in scope of license renewal for 10 CFR 54.4(a)(2) up to the first seismic anchor beyond the safety/nonsafety interface.

Issue:

The applicant depicts on LRA drawing PID-1-CBA-LR20303, at locations B-11 and B-12, sections of safety-related piping connected to nonsafety-related piping passing through valves V7 and V8. These nonsafety-related $1^1/_2$" lines through V7 and V8 continue to location B-11 through check valve V3 to the storm sewer. The seismic anchors could not be located for these lines through valves V7 and V8 beyond the safety/nonsafety interface.

Request:

The staff requests that the applicant provide the seismic anchor locations for the $1^1/_2$" lines to locate the seismic anchors beyond the safety/nonsafety interface.

NextEra Energy Seabrook Response:

As indicated by the "I" flag (LRA drawing PID-1-CBA-LR20303 at location 10-B), the non-safety related piping is Seismic Category I. Seabrook Station design engineering review indicated that considering the size relationship (branch line 1-1/2 inch nominal diameter; header pipe 12.0 inch nominal diameter) the smaller piping would not impose loads on the larger piping. Per Seabrook Station's (UFSAR 3.7(B).3.3a), branch connections are decoupled from the main runs when the ratio of the branch to run section moduli is equal to or less than 0.05. For the 1-1/2 inch branch, the section modulus = 0.131 inch cubed; for the 12 inch run pipe the section modulus = 43.8 inch cubed. Ratio = 0.131/43.8 = 0.003 < 0.05. This being the case, an interface anchor is not needed. The 1 1/2" line remains in scope for spatial considerations.

Request for Additional Information (RAI) 2.3.3.27-02

Background:

LRA Section 2.1 describes the applicant's scoping methodology, which specifies how systems or components were determined to be included in scope of license renewal. The staff confirms the inclusion of all components subject to an AMR by reviewing the results of the screening of components within the license renewal boundary.

Issue:

The applicant depicts on LRA drawing PID-1-DF-LR20200, at location H-7, a section of 4" piping in scope for license renewal for 10 CFR 54.4 (a)(2). The 4" piping continues to LRA drawing PID-1-SD-LR20402, at location F-7, where it is not shown in scope of license renewal.

Request:

The staff requests that the applicant justify the exclusion of the portion of the 4" piping from scope of license renewal on LRA drawing PID-1-SD-LR20402, at location F-7.

NextEra Energy Seabrook Response:

The 4" piping on LRA drawing PID-1-SD-LR20402, at location F-7 is in scope of license renewal for 10 CFR 54.4 (a)(2) up to the point where it exits the East Main Steam and Feedwater Pipe Chase and should have been colored Green Instead of Black on the drawing.

Request for Additional Information (RAI) 2.3.3.29-01

Background:

In LRA Section 2.1.2.2.2, the applicant indicates that nonsafety-related SSCs attached to safety-related SSCs are in scope of license renewal for 10 CFR 54.4(a)(2) up to the first seismic anchor beyond the safety/nonsafety interface.

Issue:

The applicant depicts on LRA drawing PID-1-CC-LR20205, at locations C-5 and F-7, sections of safety-related piping connected to nonsafety-related piping that continue to the demineralized water system on LRA drawing PID-1-DM-LR20350. However, the seismic anchors could not be located on the nonsafety-related piping beyond the safety/nonsafety interface.

Request:

The staff requests that the applicant provide the seismic anchor locations on the nonsafety-related piping as described above beyond the safety/nonsafety interface.

NextEra Energy Seabrook Response:

As shown on LRA drawing PID-1-DM-LR20350, at location G-8, all of the Demineralized Water system piping in the Primary Auxiliary Building was included within the scope of license. Therefore, a seismic anchor was not shown on LRA drawing PID-1-DM-LR20350 or PID-1-CC-LR20205. However, the piping located at location F-7 on PID-1-CC-LR20205 is supported by anchor 1604-A-02, physically located approximately 6 feet from the safety related to non-safety related interface.

The safety related to non-safety related piping interface at location C-5 does not contain a seismic anchor. However, where the lines continue on PID-1-DM-LR20350, all the lines are in scope of license renewal for 10 CFR 54.4(a)(2) and require age management. The extent of continued piping and its pipe supports provide structural support for the safety to non-safety interface and ensure that non-safety related piping loads are not transferred through the interface as determined by the piping stress analysis.

Request for Additional Information (RAI) 2.3.3.29-02

Background:

LRA Section 2.1 describes the applicant's scoping methodology, which specifies how systems or components were determined to be included in scope of license renewal. The staff confirms the inclusion of all components subject to an AMR by reviewing the results of the screening of components within the license renewal boundary.

Issue:

The applicant depicts on LRA drawing PID-1-WLD-LR20222, at location B-8, a section of 1" piping in scope of license renewal for 10 CFR 54.4 (a)(2). The 1" piping continues on LRA drawing PID-1-CS-LR20727, at location H-8. On LRA drawing PID-1-CS-LR20727, the piping is not included in scope of license renewal.

Request:

The staff requests that the applicant justify the exclusion of the 1" piping from scope of license renewal on LRA drawing PID-1-CS-LR20727, at location H-8.

NextEra Energy Seabrook Response:

The 1" piping shown on LRA drawing PID-1-WLD-LR20222, at location B-8, was inadvertently colored Green and should have been colored Black indicating that it is not within the scope of license renewal. As stated by Note 1, on LRA drawing PID-1-CS-LR20727, the Chiller Surge Tank (CS-TK-3) and piping associated with this tank is in dry layup (not liquid filled) and therefore, not within the scope of license renewal.

Request for Additional Information (RAI) 2.3.3.29-03

Background:

In LRA Section 2.1.2.2.2, the applicant indicates that nonsafety-related SSCs attached to safety-related SSCs are in scope of license renewal for 10 CFR 54.4(a)(2) up to the first seismic anchor beyond the safety/nonsafety interface.

Issue:

The staff made the following two observations involving the applicant's usage of its methodology described in LRA Section 2.1.2.2.2:

- On LRA drawings PID-1-CC-LR20205 (loop A) and PID-1-CC-LR20211 (loop B), at locations C-5 and 6-5 respectively, sections of safety-related piping connected to nonsafety-related piping are in scope of license renewal for 10 CFR 54.4(a)(2). No seismic anchors are indicated on these LRA drawings. These lines continue on LRA drawing PID-1-FP-LR20268, at location B-9, where seismic anchors could not be located on the nonsafety-related piping beyond the safety/nonsafety interface.
- On LRA drawing PI D-1-CC-LR20211, at location F-7, a section of safety-related piping connected to nonsafety-related piping is shown in scope of license renewal. The piping continues on LRA drawing PID-1-DM-LR20350, at location H-8, where a seismic anchor could not be located on the nonsafety-related piping beyond the safety/nonsafety interface.

Request:

The staff requests that the applicant provide the seismic anchor locations on the nonsafety-related piping beyond the safety/nonsafety interface as described in both of the above issues.

NextEra Energy Seabrook Response:

1. On LRA drawings PID-1-CC-LR20205 (loop A) and PID-1-CC-LR20211 (loop B), at locations C-5 and B-5 respectively the line continues on to drawing PID-1-FP-LR20268 at location B-9. The questioned safety related to non-safety related piping interfaces do not contain seismic anchors. However, where the lines continue on PID-1-FP-LR20268, at location B-9, all the lines are in scope of license renewal and require aging management. The extent of continued piping and its pipe supports provide structural support for the safety to non-safety interface and ensure that non-safety related piping loads are not transferred through the interface as determined by the piping stress analysis.
2. On LRA drawing PI D-1-CC-LR20211, at location F-7, the line continues on to drawing PID-1-DM-LR20350, at location H-8. The questioned safety related to non-safety related piping interface does not contain seismic anchors. However, where the lines continue on PID-1-DM-LR20350, at location H-8, all the lines are in scope of license renewal and require aging management. The extent of continued piping and

its pipe supports provide structural support for the safety to non-safety interface and ensure that non-safety related piping loads are not transferred through the interface as determined by the piping stress analysis.

Request for Additional Information (RAI) 2.3.3.34-01

Background:

LRA Section 2.1 describes the applicant's scoping methodology, which specifies how systems or components were determined to be included in scope of license renewal. The staff confirms the inclusion of all components subject to an AMR by reviewing the results of the screening of components within the license renewal boundary.

Issue:

The applicant depicts on LRA drawing PID-1-DR-LR20633, at locations H-5 and H-6, 6" lines that continue on LRA drawing PID-1-SD-20402, at location F-9. On LRA drawing PID-1-DR-LR20633, the 6" piping that enters the continuation flag marked 'B' at location H-6 is included in scope of license renewal for 10 CFR 54.4(a)(2), while the other 6" piping at location H-5 that enters the continuation flag marked 'C' is not in scope of license renewal. However on the continuation LRA drawing PID-1-SD-20402, at location F-9, the 6" piping for 'B' is shown not in scope of license renewal and the other 6" piping for 'C' is shown in scope of license renewal.

Request:

The staff requests that the applicant clarify the correct designations of both 6" piping sections as shown on both LRA drawings PID-1-DR-LR20633 and PID-1-SD-20402.

NextEra Energy Seabrook Response:

The 6" piping on LRA drawing PID-1-SD-LR20402, marked with the 'B' continuation flag, at location F-9, is in scope of license renewal for 10 CFR 54.4 (a)(2) up to the point where it exits the Emergency Feedwater Pump House and should have been colored Green on the drawing.

The 6" piping on LRA drawing PID-1-DR-LR20633, marked with the 'B' continuation flag, at location H-6, where it exits the Emergency Feedwater Pump House is not in the scope of license renewal and should have been colored Black on the drawing.

The 6" piping LRA drawing PID-1-SD-LR20402, marked with the 'C' continuation flag, at location F-8, is not in the scope of license renewal after it leaves the Emergency Feedwater Pump House and should have been colored Black instead of Green on the

drawing. Both 6" roof drain lines in the Emergency Feedwater Pump House are within the scope of license renewal up to the point where they exit the Emergency Feedwater Pump House.

Request for Additional Information (RAI) 2.3.3.35-01

Background:

LRA Section 2.1 describes the applicant's scoping methodology, which specifies how systems or components were determined to be included in scope of license renewal. The staff confirms the inclusion of all components subject to an AMR by reviewing the results of the screening of components within the license renewal boundary.

Issue:

The applicant depicts on LRA drawing PID-1-SB-LR20626, at location B-12, a section of 3" piping in scope of license renewal for 10 CFR 54.4(a)(3). The 3" piping continues to LRA drawing PID-1-SB-LR20629, at location E-12, where it is not included in the scope of license renewal.

Request:

The staff requests that the applicant justify the exclusion of this portion of 3" piping from scope of license renewal on LRA drawing PID-1-SB-LR20629.

NextEra Energy Seabrook Response:

The 3" piping on LRA drawing PID-1-SB-LR20626, at location B-12, should have ended before continuing onto drawing PID-1-SB-LR20629 and should have been tagged with LR Note 3 on the Black colored section indicating that the piping exits the Tank Farm and enters the Waste Processing Building and is not subject to aging management review.

Request for Additional Information (RAI) 2.3.3.37-01

Background:

In LRA Section 2.1.3, the applicant states that its screening process was used to identify the passive, long-lived structures and components in the scope of license renewal and subject to an AMR. The staff confirms inclusion of all components subject to an AMR by reviewing component types within the license renewal boundary.

Issue:

The applicant depicts on LRA drawing PID-1-SW-LR20795, at locations B-11 and C-12, strainers in scope of license renewal for 10 CFR 54.4(a)(1). However, the component type strainer and its component intended function(s) are not included in LRA Table 2.3.3-37, "Service Water System Components Subject to Aging Management Review."

Request:

The staff requests that the applicant justify the exclusion of the strainer and its component intended function(s) from LRA Table 2.3.3-37.

NextEra Energy Seabrook Response:

The Service Water system strainers SW-S-10 and SW-S-11 shown on LRA drawing PID-1-SW-LR20795, at locations B-11 and C-12, are not excluded from LRA Table 2.3.3-37. Rather, they were evaluated as component type "filter housing" with an intended function of "pressure boundary" in Table 2.3.3-37. The screen portion of the strainer was evaluated as component type "filter element" with an intended function of "filter" in Table 2.3.3-37.

Request for Additional Information (RAI) 2.3.3.39-01

Background:

LRA Section 2.1 describes the applicant's scoping methodology, which specifies how systems or components were determined to be included in scope of license renewal. The staff confirms the inclusion of all components subject to an AMR by reviewing the results of the screening of components within the license renewal boundary.

Issue:

The applicant refers to a LR note 1 on LRA drawing PID-1-SF-LR20484, at location F-8, to describe a section of piping which states "These components are drained during operation so therefore they have an internal environment of air/gas so they have no license renewal (LR) intended function and not in scope." The portion of the line not in scope is directly connected to the refueling canal skimmer pump (P-272) and continues to the Refueling Pool & Canal skimmers. LRA Table 3.3.2-39, "Spent Fuel Pool Cooling System Summary of Aging Management Evaluation," for Pump Casing does not provide

an internal environment of air or gas. Also, on LRA drawing PID-1-DM-LR20353, LR Note 1 indicates pump SF-P-272 is a component that is in scope for license renewal, which contradicts with LR Note 1 on LRA drawing PID-1-SF-LR20484.

Request:

The staff requests that the applicant clarify the scoping designation of the piping directly connected to the refueling canal skimmer pump.

NextEra Energy Seabrook Response:

The Refueling Canal Skimmer pump, SF-P-272, is a non-safety related pump and is in operation only during refueling outages when the refueling pool and canal are flooded. This pump and associated Spent Fuel piping is drained during normal power operation, and, with the exception of the piping segments noted below, are not in-scope for License Renewal.

Piping downstream of SF-P-272 is attached to ASME Code Class 2 piping at the containment penetration. The piping between the Class 2 boundary and the designated anchor is in-scope for 10 CFR 54.4(a)(2).

The non-safety related pump, SF-P-272, and associated piping beyond that anchor point have no License Renewal functions and not in-scope as correctly noted on LRA drawing PID-1-SF-LR20484, Note 1. As stated above, SF-P-272 and associated piping is drained and has an internal environment of air/gas during normal power operation and therefore excluded from the scope of license renewal for 10 CFR 54.4(a)(2) in accordance with the guidance provided in NEI 95-10, Rev 6, Section 5.2.2.1, "Systems and Components Containing Air/Gas".

As such, there would be no corresponding item included in LRA Table 3.3.2-39. The "Pump Casing" shown in LRA Table 3.3.2-39, "Spent Fuel Pool Cooling System Summary of Aging Management Evaluation," refers to the Spent Fuel Pool Cooling pumps (SF-P-10A, 10B, and 10C shown on LRA drawing PID-1-SF-LR20482) and Spent Fuel Pool Skimmer Pump (SF-P-12 shown on LRA drawing PID-1-SF-LR20483), which are normally in operation with an internal environment of Treated Borated Water.

LRA drawing PID-1-DM-LR20353, LR Note 1 refers to the mechanical seal supply system piping going to the Refueling Canal Skimmer pump, SF-P-272. The Note is not intended to imply that the pump itself is in-scope. The mechanical seal is considered to be a short lived item (PID-1-DM-LR20353, LR Note 2) and not in-scope for License Renewal. The Mechanical Seal Supply piping to the pump mechanical seal in containment is stainless steel in a treated water internal environment. This piping is in scope of license renewal for 10 CFR 54.4(a)(2).

Request for Additional Information (RAI) 2.3.3.39-02

Background:

The applicant states in section 2.1.2 that the Seabrook Station, Unit 1 (Seabrook) UFSAR is one of the existing plant documentation sources used to form the Seabrook Station CLB. The CLB documentation is then used by the applicant to identify system level and structure intended functions to help develop the basis for identification of the in scope components for license renewal.

Issue:

During the staff's review of the Section 2.3.3.39, the staff identified a discrepancy between the CLB and LRA descriptions of the alternate spent fuel pool cooling (ASFPC) heat exchanger. The applicant states in the Seabrook UFSAR that the ASFPC heat exchanger is available and can be placed in service as needed. The applicant describes in the LRA that the ASFPC heat exchanger is blank-flanged and is in abandoned status.

Request:

The staff requests that the applicant clarifies whether the ASFPC heat exchanger is available as part of the spent fuel pool cooling system and if the component is in scope of license renewal. Please state how any inconsistencies will be corrected.

NextEra Energy Seabrook Response:

UFSAR Change Request, UFCR 10-029, has been issued to remove the discussion from the UFSAR regarding the alternate spent fuel pool cooling heat exchanger use. The UFSAR Section 9.1.3.1 has been revised as follows:

"An alternate spent fuel cooling (ASFPC) heat exchanger was provided for use with the reactor defueled when the primary component cooling water system would not otherwise be required. The service water system provided cooling water to the ASFPC heat exchanger. The ASFPC system is no longer required, and the system is isolated from the service water and spent fuel pool cooling systems. Portions of the service water piping associated with the ASFPC system have been dismantled."

All other sections in the UFSAR where the alternate spent fuel pool cooling heat exchanger was discussed have also been deleted.

Based on the above discussion, the alternate spent fuel pool cooling heat exchanger is not in scope for License Renewal.

Request for Additional Information (RAI) 2.3.3.41-01

Background:

In LRA Section 2.1.3, the applicant states that its screening process was used to identify the passive, long-lived structures and components in the scope of license renewal and subject to an AMR. The staff confirms inclusion of all components subject to an AMR by reviewing component types within the license renewal boundary.

Issue:

The applicant depicts on LRA drawing PID 1-VSL-LR20776, at locations F-4 and F-11, four vent pipelines in each location in scope for license renewal for 10 CFR 54.4 (a)(2). However, the valves associated with the vent lines are not listed on LRA Table 2.3.3-41, "Valve Stem Leak-off System Components Subject to Aging Management Review," as a valve component type with intended function(s).

Request:

The staff requests that the applicant justify the exclusion of the valves from LRA Table 2.3.3-41.

NextEra Energy Seabrook Response:

The four vent valves depicted on LRA drawing PID-1-VSL-LR20776 at location F-4 and an additional four vent valves at location F-11 are the instrument vent valves for the Primary Component Cooling Water system (CC) flow indicating switches (1-CC-FISL-2114, 2116, 2214 and 2216). These instruments are depicted on LRA drawing PID-1-CC-LR-20207 at locations F-10 and D-10 and PID-1-CC-LR-20213 at locations F-5 and D-5. These instrument valves are in scope of license renewal under the Primary Component Cooling Water system as a commodity. Normally instrument details are not shown on the P&ID's. There should have been a system flag designator on the down stream side of these valves denoting these valves are part of the CC system.

Request for Additional Information (RAI) 2.3.3.41-02

Background:

In LRA Section 2.1.2.2.2, the applicant indicates that nonsafety-related SSCs attached to safety-related SSCs are in scope of license renewal for 10 CFR 54.4(a)(2) up to the first seismic anchor beyond the safety/nonsafety interface.

Issue:

The applicant depicts on LRA drawing PID-1-VSL-LR20776, at locations F-4 and F-11, four vent pipelines in each location in scope of license renewal for 10 CFR 54.4 (a)(2). However, the seismic anchors could not be located on the nonsafety-related piping beyond the safety/nonsafety interface.

Request:

The staff requests that the applicant provide the seismic anchor locations on the nonsafetyrelated piping as described above beyond the safety/nonsafety interface.

NextEra Energy Seabrook Response:

The safety related component (i.e., RH-HCV-606 valve stem leak off) to non-safety related component (tubing to vent / drain) transition is via a flexible connector (e.g, 1-RH-FLEX HOSE-3). The flexible connector effectively decouples the piping system negating a transfer of loads. A seismic anchor is not required. To ensure adequate protection of the safety related piping, as a preventative option, the entire non-safety related piping is subject to aging management (highlighted in green). The instruments that the tubing is connected to are located in an instrument rack which would be the seismic anchor for the valves, tubing, and instruments. The instruments 1-CC-FISL-2114 and 1-CC-FISL-2116 are located in instrument rack 1-MM-IR-14; 1-CC-FISL-2214 and CC- FISL-2216 are located in instrument rack 1-MM-IR-23. Both instrument racks are in scope of license renewal.

Request for Additional Information (RAI) 2.3.3.45-01

Background:

LRA Section 2.1 describes the applicant's scoping methodology, which specifies how systems or components were determined to be included in scope of license renewal. The staff confirms the inclusion of all components subject to AMR by reviewing the results of the screening of components within the license renewal boundary.

Issue:

In LRA drawing PID-1-WLD-LR20218, at location G-6, the applicant places LR Note 2, which states "Components have an internal environment of air/gas so they have no license renewal intended function and are not in scope." The portion of the piping excluded from scope of license renewal is directly connected to the in-scope reactor

coolant drain tank (TK-55) and continues up to the relief valve V83. LRA Table 3.3.2-45, "Waste Processing Liquid Drains System Summary of Aging Management Evaluation," for tanks does not list an internal environment of air or gas. The staff is concerned with conditions where the relief valves actuate and the drain lines are liquid-filled. Therefore, the failure of the liquid-filled drain lines during a design basis event is required to be considered.

Request:

The applicant is requested to either:

1. Include the piping attached to the reactor coolant drain tank in scope of license renewal and subject to aging management in accordance with 10 CFR 54.4(a)(2), or
2. Provide the results of an evaluation that demonstrates the failure of this piping, while liquid-filled during a design basis event, will not prevent the satisfactory accomplishment of any functions identified in 10 CFR 54.4(a)(1).

NextEra Energy Seabrook Response:

Seabrook Station evaluated all non-safety related systems and components located in buildings containing 10 CFR 54.4(a)(1) components. The non-safety related systems and components that contained liquid or steam and are located in buildings that contained 10 CFR 54.4(a)(1) components were included in the scope of license renewal. Based on plant and industry operating experience, Seabrook Station excluded the non-safety related SSCs containing air or gas from the scope of license renewal with the exception of portions that are attached to safety related SSCs and were required for structural support (Ref, LRA Section 2.1.2.2.3, page 2.1-15). All supports for non-safety related SSCs in buildings with 10 CFR 54.4(a)(1) components were included in-scope of license renewal to prevent adverse interaction with safety related SSSs. This approach is consistent with the guidance provided in NEI 95-10, Rev 6, Section 5.2.2.1 as described below.

The 2" piping on LRA drawing PID-1-WLD-LR20218, at location G-6 serves a dual function, 1) for venting gas from the reactor coolant drain tank (vent gas flow path) and 2) for collecting drainage from the valve steam leak-off lines (WLD-V-342 flow path). The piping configuration is such that relief valve WLD-V-83 and the branch connection to vent gas is at a higher elevation than the tee intersection downstream of WLD-V-132. Therefore, any liquid through the WLD-V-I32 flow path would drain into the tank. The piping above the tee intersection is not liquid filled during normal operation and was evaluated in accordance with the guidance provided in NEI 95-10, Rev 6, Section 5.2.2.1, "Systems and Components Containing Air/Gas". This section of NEI 95-10 states that "*air and gas systems (non-liquid) are not a hazard to other plant equipment. Industry operating experience (such as NUREG-1801, industry tools documents, and other LRA SERs) for systems containing air/gas, has shown no failures due to aging that have*

adversely impacted the accomplishment of a safety function. In addition, there are no credible aging mechanisms for air/gas systems with dry internal environments. A review of site-specific operating experience should be performed to verify this assumption. The results of this site-specific review should be maintained in a retrievable and auditable form. Additionally, components containing air/gas cannot adversely affect safety-related SSCs due to leakage or spray. Therefore, these systems are not considered to be in scope for 54.4(a)(2)."

Additionally, the non-safety related Waste Processing Liquid Drains system relief valve, WLD-V-83, at location H-6 is not designed to operate nor lift during a design basis event. As stated in NUREG 1800, Section A.1 (Branch Technical Position RLSP-1), the applicable aging effects to be considered for license renewal include those that could result from normal plant operation, including plant/system operating transients and plant shutdown. Specific aging effects from abnormal events need not be postulated for license renewal.

As part of the integrated plant evaluation for license renewal, Seabrook Station determined that the normal internal environment for this subject piping is air-indoor uncontrolled (not liquid filled). This decision was based on the conclusion that the subject piping is normally a vent path for the reactor coolant drain tank and the relief valve in this vent path was designed to limit potential over pressurization of the tank, which is an extremely rare occurrence, if any at all. The relief valve set-points are rarely challenged, and therefore, it is a rare occurrence for a relief valve to lift.

Seabrook Station concluded that because the internal environment of this piping is air-indoor uncontrolled, there is no credible aging effect that will degrade the pipe and therefore, no aging management is needed.

Request for Additional Information (RAI) 2.2.3.45-02

Background:

LRA Section 2.1 describes the applicant's scoping methodology, which specifies how systems or components were determined to be included in scope of license renewal. The staff confirms the inclusion of all components subject to an AMR by reviewing the results of the screening of components within the license renewal boundary.

Issue:

The applicant depicts on LRA drawing PID-1-WLD-LR20218, at location H-5, a tailpipe connected to a relief valve (V83) not in scope of license renewal. However, on the continuation LRA drawing PID-1-WLD-LR20219, at location F-4, the tailpipe is shown in scope of license renewal for 10 CFR 54.4(a)(2).

Request:

The staff requests that the applicant clarify the correct designation for the relief valve tailpipe as shown in LRA drawings PID-1-WLD-LR20218 and PID-1-WLD-LR20219 at the above locations.

NextEra Energy Seabrook Response:

The tailpipe downstream of relief valve WLD-V-83 as shown on PID-WLD-LR20219 (location F-4) is not within the scope of license renewal and should have been colored Black instead of Green.

Request for Additional Information (RAI) 2.3.4.2-01

Background:

LRA Section 2.1 describes the applicant's scoping methodology, which specifies how systems or components were determined to be included in scope of license renewal. The staff confirms the inclusion of all components subject to an AMR by reviewing the results of the screening of components within the license renewal boundary.

Issue:

The applicant depicts on LRA drawing PID-1-ASC-LR20908, at location E-12, piping inside the heat exchanger HWS-E-132 in scope of license renewal for 10 CFR 54.4(a)(2). However, on LRA drawing PID-1-HW-LR20056, at location F-11, the applicant depicts the same piping not in scope of license renewal.

Request:

The staff requests that the applicant clarify the scoping of the piping inside the heat exchanger as shown on LRA drawings PID-1-ASC-LR20908 and PID-1-HW-LR20056.

NextEra Energy Seabrook Response:

The tubing inside the Hot Water Heating system heat exchanger, HWS-E-132, on LRA drawing PID-1-ASC-LR20908, at location E-12, is not within the scope of license renewal and should have been colored Black instead of Green.

Request for Additional Information (RAI) 2.3.4.5-01

Background:

In LRA Section 2.1.3, the applicant states that its screening process was used to identify the passive, long-lived structures and components in the scope of license renewal and subject to AMR. The staff confirms inclusion of all components subject to an AMR by reviewing component types within the license renewal boundary.

Issue:

The applicant depicts on LRA drawing PID-1·CO-LR20426, at location H-9, a floating seal CO-MM-679 of the condensate storage tank TK-25 not in scope of license renewal. LRA Table 2.3.4-5, "Condensate System Components Subject to Aging Management Review," does not list this floating seal. This component appears to be part of the condensate system tank, which is depicted as being in scope of license renewal for 10 CFR 54.4(a)(1).

Request

The staff requests that the applicant justify the exclusion of the floating seal from scope of license renewal and LRA Table 2.3.4-5.

NextEra Energy Seabrook Response:

The floating cover in the condensate storage tank is not an integral part of the tank. The cover is non-safety related and provides no License Renewal function. The floating cover, CO-MM-679, acts to minimize ingress of air (oxygen) and help to maintain temperature.

Due to prior external industry operating experience with a floating cover seal failure compromising the discharge path from the tank, a preventive maintenance activity was created at Seabrook Station to replace the floating cover seal every six refuel cycles. Upon further review, Seabrook Station has added the floating cover seal as a functional (a)(2) component within the License Renewal Condensate System boundary. Because it is periodically replaced, the floating cover seal is screened out and no aging management review is required.

Request for Additional Information (RAI) 2.3.4.8-01

Background:

LRA Section 2.1 describes the applicant's scoping methodology, which specifies how systems or components were determined to be included in scope of license renewal. The staff confirms the inclusion of all components subject to an AMR by reviewing the results of the screening of components within the license renewal boundary.

Issue:

The applicant depicts on LRA drawing PID-1-SS-LR20521, at location A-6, "vent to atmosphere" piping attached to cooler H-376 as not being in scope of license renewal. However, cooler H-376 is shown as in scope of license renewal for 10 CFR 54.4(a)(2).

Request:

The staff requests that the applicant justify its exclusion of the vent to atmosphere piping, which is attached to cooler H-376, from scope of license renewal.

NextEra Energy Seabrook Response:

The "vent to atmosphere" piping adjacent to SS-H-376 was inadvertently not colored on drawing PID-1-SS-LR20521. This piping is in-scope of license renewal for 10 CFR 54.4(a)(2) and should have been indicated as such by being colored Green on LRA drawing PID-1-SS-LR20521, at location A-6.

Enclosure 4 to SBK-L-11015

LRA Appendix A - Final Safety Report Supplement

Table A.3 License Renewal Commitment List

A.3 LICENSE RENEWAL COMMITMENT LIST

No.	PROGRAM or TOPIC	COMMITMENT	UFSAR LOCATION	SCHEDULE
1.	PWR Vessel Internals	An inspection plan for Reactor Vessel Internals will be submitted for NRC review and approval at least twenty-four months prior to entering the period of extended operation.	A.2.1.7	Program to be implemented prior to the period of extended operation. Inspection plan to be submitted to NRC not less than 24 months prior to the period of extended operation.
2.	Closed-Cycle Cooling Water	Enhance the program to include visual inspection for cracking, loss of material and fouling when the in-scope systems are opened for maintenance.	A.2.1.12	Prior to the period of extended operation
3.	Inspection of Overhead Heavy Load and Light Load (Related to Refueling) Handling Systems	Enhance the program to monitor general corrosion on the crane and trolley structural components and the effects of wear on the rails in the rail system.	A.2.1.13	Prior to the period of extended operation
4.	Inspection of Overhead Heavy Load and Light Load (Related to Refueling) Handling Systems	Enhance the program to list additional cranes for monitoring.	A.2.1.13	Prior to the period of extended operation
5.	Compressed Air Monitoring	Enhance the program to include an annual air quality test requirement for the Diesel Generator compressed air sub system.	A.2.1.14	Prior to the period of extended operation
6.	Fire Protection	Enhance the program to perform visual inspection of penetration seals by a fire protection qualified inspector.	A.2.1.15	Prior to the period of extended operation.

No.	PROGRAM or TOPIC	COMMITMENT	UFSAR LOCATION	SCHEDULE
7.	Fire Protection	Enhance the program to add inspection requirements such as spalling, and loss of material caused by freeze-thaw, chemical attack, and reaction with aggregates by qualified inspector.	A.2.1.15	Prior to the period of extended operation.
8.	Fire Protection	Enhance the program to include the performance of visual inspection of fire-rated doors by a fire protection qualified inspector.	A.2.1.15	Prior to the period of extended operation.
9.	Fire Water System	Enhance the program to include NFPA 25 guidance for "where sprinklers have been in place for 50 years, they shall be replaced or representative samples from one or more sample areas shall be submitted to a recognized testing laboratory for field service testing".	A.2.1.16	Prior to the period of extended operation.
10.	Fire Water System	Enhance the program to include the performance of periodic flow testing of the fire water system in accordance with the guidance of NFPA 25.	A.2.1.16	Prior to the period of extended operation.
11.	Fire Water System	Enhance the program to include the performance of periodic visual or volumetric inspection of the internal surface of the fire protection system upon each entry to the system for routine or corrective maintenance. These inspections will be documented and trended to determine if a representative number of inspections have been performed prior to the period of extended operation. If a representative number of inspections have not been performed prior to the period of extended operation, focused inspections will be conducted. These inspections will be performed within ten years prior to the period of extended operation.	A.2.1.16	Within ten years prior to the period of extended operation.
12.	Aboveground Steel Tanks	Enhance the program to include components and aging effects required by the Aboveground Steel Tanks.	A.2.1.17	Prior to the period of extended operation.

No.	PROGRAM or TOPIC	COMMITMENT	UFSAR LOCATION	SCHEDULE
13.	Aboveground Steel Tanks	Enhance the program to include an ultrasonic inspection and evaluation of the internal bottom surface of the two Fire Protection Water Storage Tanks.	A.2.1.17	Within ten years prior to the period of extended operation.
14.	Fuel Oil Chemistry	Enhance program to add requirements to 1) sample and analyze new fuel deliveries for biodiesel prior to offloading to the Auxiliary Boiler fuel oil storage tank and 2) periodically sample stored fuel in the Auxiliary Boiler fuel oil storage tank.	A.2.1.18	Prior to the period of extended operation.
15.	Fuel Oil Chemistry	Enhance the program to add requirements to check for the presence of water in the Auxiliary Boiler fuel oil storage tank at least once per quarter and to remove water as necessary.	A.2.1.18	Prior to the period of extended operation.
16.	Fuel Oil Chemistry	Enhance the program to require draining, cleaning and inspection of the diesel fire pump fuel oil day tanks on a frequency of at least once every ten years.	A.2.1.18	Prior to the period of extended operation.
17.	Fuel Oil Chemistry	Enhance the program to require ultrasonic thickness measurement of the tank bottom during the 10-year draining, cleaning and inspection of the Diesel Generator fuel oil storage tanks, Diesel Generator fuel oil day tanks, diesel fire pump fuel oil day tanks and auxiliary boiler fuel oil storage tank.	A.2.1.18	Prior to the period of extended operation.
18.	Reactor Vessel Surveillance	Enhance the program to specify that all pulled and tested capsules, unless discarded before August 31, 2000, are placed in storage.	A.2.1.19	Prior to the period of extended operation.
19.	Reactor Vessel Surveillance	Enhance the program to specify that if plant operations exceed the limitations or bounds defined by the Reactor Vessel Surveillance Program, such as operating at a lower cold leg temperature or higher fluence, the impact of plant operation changes on the extent of Reactor Vessel embrittlement will be evaluated and the NRC will	A.2.1.19	Prior to the period of extended operation.

No.	PROGRAM or TOPIC	COMMITMENT	UFSAR LOCATION	SCHEDULE
		be notified.		
20.	Reactor Vessel Surveillance	Enhance the program as necessary to ensure the appropriate withdrawal schedule for capsules remaining in the vessel such that one capsule will be withdrawn at an outage in which the capsule receives a neutron fluence that meets the schedule requirements of 10 CFR 50 Appendix H and ASTM E185-82 and that bounds the 60-year fluence, and the remaining capsule(s) will be removed from the vessel unless determined to provide meaningful metallurgical data.	A.2.1.19	Prior to the period of extended operation.
21.	Reactor Vessel Surveillance	Enhance the program to ensure that any capsule removed, without the intent to test it, is stored in a manner which maintains it in a condition which would permit its future use, including during the period of extended operation.	A.2.1.19	Prior to the period of extended operation.
22.	One-Time Inspection	Implement the One Time Inspection Program.	A.2.1.20	Within ten years prior to the period of extended operation.
23.	Selective Leaching of Materials	Implement the Selective Leaching of Materials Program. The program will include a one-time inspection of selected components where selective leaching has not been identified and periodic inspections of selected components where selective leaching has been identified.	A.2.1.21	Within five years prior to the period of extended operation.
24.	Buried Piping And Tanks Inspection	Implement the Buried Piping And Tanks Inspection Program.	A.2.1.22	Within ten years prior to entering the period of extended operation

No.	PROGRAM or TOPIC	COMMITMENT	UFSAR LOCATION	SCHEDULE
25.	One-Time Inspection of ASME Code Class 1 Small Bore-Piping	Implement the One-Time Inspection of ASME Code Class 1 Small Bore-Piping Program.	A.2.1.23	Within ten years prior to the period of extended operation.
26.	External Surfaces Monitoring	Enhance the program to specifically address the scope of the program, relevant degradation mechanisms and effects of interest, the refueling outage inspection frequency, the inspections of opportunity for possible corrosion under insulation, the training requirements for inspectors and the required periodic reviews to determine program effectiveness.	A.2.1.24	Prior to the period of extended operation.
27.	Inspection of Internal Surfaces in Miscellaneous Piping and Ducting Components	Implement the Inspection of Internal Surfaces in Miscellaneous Piping and Ducting Components Program.	A.2.1.25	Prior to the period of extended operation.
28.	Lubricating Oil Analysis	Enhance the program to add required equipment, lube oil analysis required, sampling frequency, and periodic oil changes.	A.2.1.26	Prior to the period of extended operation.
29.	Lubricating Oil Analysis	Enhance the program to sample the oil for the Switchyard SF_6 compressors and the Reactor Coolant pump oil collection tanks.	A.2.1.26	Prior to the period of extended operation.
30.	Lubricating Oil Analysis	Enhance the program to require the performance of a one-time ultrasonic thickness measurement of the lower portion of the Reactor Coolant pump oil collection tanks prior to the period of extended operation.	A.2.1.26	Prior to the period of extended operation.
31.	ASME Section XI, Subsection IWL	Enhance procedure to include the definition of "Responsible Engineer".	A.2.1.28	Prior to the period of extended operation.

No.	PROGRAM or TOPIC	COMMITMENT	UFSAR LOCATION	SCHEDULE
32.	Structures Monitoring Program	Enhance procedure to add the aging effects, additional locations, inspection frequency and ultrasonic test requirements.	A.2.1.31	Prior to the period of extended operation.
33.	Structures Monitoring Program	Enhance procedure to include inspection of opportunity when planning excavation work that would expose inaccessible concrete.	A.2.1.31	Prior to the period of extended operation.
34.	Electrical Cables and Connections Not Subject to 10 CFR 50.49 Environmental Qualification Requirements	Implement the Electrical Cables and Connections Not Subject to 10 CFR 50.49 Environmental Qualification Requirements program.	A.2.1.32	Prior to the period of extended operation.
35.	Electrical Cables and Connections Not Subject to 10 CFR 50.49 Environmental Qualification Requirements Used in Instrumentation Circuits	Implement the Electrical Cables and Connections Not Subject to 10 CFR 50.49 Environmental Qualification Requirements Used in Instrumentation Circuits program.	A.2.1.33	Prior to the period of extended operation.
36.	Inaccessible Power Cables Not Subject to 10 CFR 50.49 Environmental Qualification Requirements	Implement the Inaccessible Power Cables Not Subject to 10 CFR 50.49 Environmental Qualification Requirements program.	A.2.1.34	Prior to the period of extended operation.
37.	Metal Enclosed Bus	Implement the Metal Enclosed Bus program.	A.2.1.35	Prior to the period of extended operation.
38.	Fuse Holders	Implement the Fuse Holders program.	A.2.1.36	Prior to the period of extended operation.
39.	Electrical Cable Connections Not Subject to 10 CFR	Implement the Electrical Cable Connections Not Subject to 10 CFR 50.49 Environmental Qualification Requirements program.	A.2.1.37	Prior to the period of extended operation.

No.	PROGRAM or TOPIC	COMMITMENT	UFSAR LOCATION	SCHEDULE
	50.49 Environmental Qualification Requirements			
40.	345 KV SF_6 Bus	Implement the 345 KV SF_6 Bus program.	A.2.2.1	Prior to the period of extended operation.
41.	Metal Fatigue of Reactor Coolant Pressure Boundary	Enhance the program to include additional transients beyond those defined in the Technical Specifications and UFSAR.	A.2.3.1	Prior to the period of extended operation.
42.	Metal Fatigue of Reactor Coolant Pressure Boundary	Enhance the program to implement a software program, to count transients to monitor cumulative usage on selected components.	A.2.3.1	Prior to the period of extended operation.
43.	Pressure –Temperature Limits, including Low Temperature Overpressure Protection Limits	Seabrook Station will submit updates to the P-T curves and LTOP limits to the NRC at the appropriate time to comply with 10 CFR 50 Appendix G.	A.2.4.1.4	The updated analyses will be submitted at the appropriate time to comply with 10 CFR 50 Appendix G, Fracture Toughness Requirements.
44.	Environmentally-Assisted Fatigue Analyses (TLAA)	***NextEra Seabrook will perform a review of design basis ASME Class 1 component fatigue evaluations to determine whether the NUREG/CR-6260-based components that have been evaluated for the effects of the reactor coolant environment on fatigue usage are the limiting components for the Seabrook plant configuration. If more limiting components are identified, the most limiting component will be evaluated for the effects of the reactor coolant environment on fatigue usage. If the limiting location identified consists of nickel alloy, the environmentally-assisted fatigue calculation for nickel alloy will be performed using the rules of NUREG/CR-6909.***	A.2.4.2.3	At least two years prior to entering the period of extended operation.

No.	PROGRAM or TOPIC	COMMITMENT	UFSAR LOCATION	SCHEDULE
		(1) Consistent with the Metal Fatigue of Reactor Coolant Pressure Boundary Program Seabrook Station will update the fatigue usage calculations using refined fatigue analyses, if necessary, to determine acceptable CUFs (i.e., less than 1.0) when accounting for the effects of the reactor water environment. This includes applying the appropriate F_{en} factors to valid CUFs determined from an existing fatigue analysis valid for the period of extended operation or from an analysis using an NRC-approved version of the ASME code or NRC-approved alternative (e.g., NRC-approved code case). (2) If acceptable CUFs cannot be demonstrated for all the selected locations, then additional plant-specific locations will be evaluated. For the additional plant-specific locations, if CUF, including environmental effects is greater than 1.0, then Corrective Actions will be initiated, in accordance with the Metal Fatigue of Reactor Coolant Pressure Boundary Program, B.2.3.1. Corrective Actions will include inspection, repair, or replacement of the affected locations before exceeding a CUF of 1.0 or the effects of fatigue will be managed by an inspection program that has been reviewed and approved by the NRC (e.g., periodic non-destructive examination of the affected locations at inspection intervals to be determined by a method accepted by the NRC).		
45.	Mechanical Equipment Qualification	Revise Mechanical Equipment Qualification Files.	A.2.4.5.9	Prior to the period of extended operation.
46.	Protective Coating Monitoring and Maintenance	Enhance the program by designating and qualifying an Inspector Coordinator and an Inspection Results Evaluator.	A.2.1.38	Prior to the period of extended operation
47.	Protective Coating Monitoring and Maintenance	Enhance the program by including, "Instruments and Equipment needed for inspection may include, but not be limited to, flashlight, spotlights, marker pen, mirror, measuring tape, magnifier, binoculars, camera with or	A.2.1.38	Prior to the period of extended operation

No.	PROGRAM or TOPIC	COMMITMENT	UFSAR LOCATION	SCHEDULE
		without wide angle lens, and self sealing polyethylene sample bags."		
48.	Protective Coating Monitoring and Maintenance	Enhance the program to include a review of the previous two monitoring reports.	A.2.1.38	Prior to the period of extended operation
49.	Protective Coating Monitoring and Maintenance	Enhance the program to require that the inspection report is to be evaluated by the responsible evaluation personnel, who is to prepare a summary of findings and recommendations for future surveillance or repair.	A.2.1.38	Prior to the period of extended operation
50.	ASME Section XI, Subsection IWE	Perform testing of the containment liner plate for loss of material.	A.2.1.17	Prior to the period of extended operation.
51.	ASME Section XI, Subsection IWL	Perform confirmatory testing and evaluation of the Containment Structure concrete	A.2.1.28	Prior to the period of extended operation
52.	ASME Section XI, Subsection IWL	Implement measures to maintain the exterior surface of the Containment Structure, from elevation -30 feet to +20 feet, in a dewatered state.	A.2.1.28	Prior to the period of extended operation
53.	Reactor Head Closure Studs	Replace the spare reactor head closure stud(s) manufactured from the bar that has a yield strength > 150 ksi with ones that do not exceed 150 ksi.	A.2.1.3	Prior to the period of extended operation.
54.	Steam Generator Tube Integrity	Unless an alternate repair criteria changing the ASME code boundary is permanently approved by the NRC, or the Seabrook Station steam generators are changed to eliminate PWSCC-susceptible tube-to-tubesheet welds, submit a plant-specific aging management program to manage the potential aging effect of cracking due to PWSCC at least twenty-four months prior to entering the Period of Extended Operation.	A.2.1.10	Program to be submitted to NRC at least 24 months prior to the period of extended operation.

No.	PROGRAM or TOPIC	COMMITMENT	UFSAR LOCATION	SCHEDULE
55.	Steam Generator Tube Integrity	Seabrook will perform an inspection of each steam generator to assess the condition of the divider plate assembly unless operating experience and/or analytical results show that crack propagation into RCS pressure boundary is not possible, then the inspections need not be performed.	A.2.1.10	Prior to entering the period of extended operation
56.	Closed-Cycle Cooling Water System	Revise the station program documents to reflect the EPRI Guideline operating ranges and Action Level values for hydrazine and sulfates.	A.2.1.12	Prior to entering the period of extended operation.
57.	Closed-Cycle Cooling Water System	Revise the station program documents to reflect the EPRI Guideline operating ranges and Action Level values for Diesel Generator Cooling Water Jacket pH.	A.2.1.12	Prior to entering the period of extended operation.
58.	Fuel Oil Chemistry	Update Technical Requirement Program 5.1, (Diesel Fuel Oil Testing Program) ASTM standards to ASTM D2709-96 and ASTM D4057-95 required by the GALL XI.M30 Rev 1	A.2.1.18	Prior to the period of extended operation.
59.	Nickel Alloy Nozzles and Penetrations	The Nickel Alloy Aging Nozzles and Penetrations program will implement applicable Bulletins, Generic Letters, and staff accepted industry guidelines.	A.2.2.3	Prior to the period of extended operation.
60.	Buried Piping and Tanks Inspection	Implement the design change replacing the buried Auxiliary Boiler supply piping with a pipe-within-pipe configuration with leak indication capability.	A.2.1.22	Prior to entering the period of extended operation.
61.	***Compressed Air Monitoring Program***	***Replace the flexible hoses associated with the Diesel Generator air compressors on a frequency of every 10 years.***	***A.2.1.14***	***Within ten years prior to entering the period of extended operation.***