NOTES:

1. LOGIC GATES ARE USED IN THIS DRAWING TO SHOW REACTOR PROTECTION SYSTEM FUNCTIONAL LOGIC AND NOT ACTUAL HARDWARE.
2. LOGIC REPRESENTED IN THIS DOCUMENT FOR PDLU CAN BE IMPLEMENTED BY RELAY LOGIC.
3. ALL SIGNAL DESCRIPTIONS REFLECT THE CONDITION THAT RESULTS IN A LOGIC "1" ON THE SIGNAL LINE. DTF ANALOG INPUT DESCRIPTIONS REFLECT CONDITIONS THAT WILL CAUSE AN INSTRUMENT TRIP.
4. ALL TRIP SIGNALS INTERNAL TO RPS AT THE CHANNEL AND DIVISION LEVEL ARE ASSERTED LOW.
5. ALL BYPASS SIGNALS AND BYPASS PERMISSIVE SIGNALS ARE ASSERTED HIGH.
6. FOR DRAWING CLARITY. ISOLATED SIGNALS ARE SHOWN WITH AN ISOLATOR AT BOTH TRANSMIT AND RECEIVE END. THIS DOES NOT MEAN TO IMPLY THAT TWO SEPARATE ISOLATORS ARE REQUIRED FOR EACH SIGNAL.
7. 2 OUT OF 4 OUTPUT ARRANGEMENT FOR SCC IS REPRESENTED IN THIS DOCUMMENT.
8. LOGIC AND DEVICE SYMBOLS USED IN THIS DRAWING ARE DEFINED IN THE IBD STANDARDS. SUPPORTING DOCUMENT 4.
9. EACH APRM TRIP SIGNAL REPRESENTS EITHER A HIGH NEUTRON FLUX TRIP. A HIGH SIMULATED THERMAL POWER TRIP. AN APRM INOPERATIVE TRIP. AND/OR A CORE FLOW RAPID COASTDOWN TRIP AS DETERMINED BY AN APRM OF THE NMS.
10. EACH SRNM TRIP SIGNAL REPRESENTS EITHER A SRNM UPSCALE (OR HIGH COUNT RATE) TRIP, A SHORT PERIOD TRIP, AND/OR A SRNM INOPERATIVE TRIP AS DETERMINDED BY EITHER TWO OR THREE OF THE SRNM'S OF THE NMS.
11. SCRAM SOLENOID POWER WIRING SHALL BE PROTECTED FROM HOT SHORT CONDITIONS BY RUNNING ALL OF THE GROUP 1A, 1B, 2A, 2B, 3A, 3B, 4A AND 4B SOLENOID POWER WIRING WITHIN SEPARATE METAL ENCLOSED RACEWAYS OR WITHIN SEPARATE METAL CONDUIT FROM THE PDLU'S THROUGH TO THE INDIVIDUAL HCU SCRAM PILOT VALVE SOLENOID.
12. PLACING ANY ONE OF THE HCU (PAIR ROD) TEST SWITCHES IN THE "TEST" POSITION SHALL RESULT IN AN ISOLATED SIGNAL BEING SENT TO THE ROD CONTROL AND INFORMATION SYSTEM INDICATING THE START OF A CONTROL ROD SCRAM TEST.
13. LOGIC REPRESENTED IN THE SCC'S SHOWN ON SHEETS 65 AND 66 OF THIS DOCUMENT CAN BE IMPLEMENTED BY RELAY LOGIC.

MPL NO. C71-1030

Figure 7.2-10 – Reactor Protection System IBD (Sheet 1 of 72)

SH NO.	TITLE
1	NOTES
2	TABLE OF CONTENTS, REF DOCUMENTS, SUPPORTING DOCUMENTS, ABREVIATIONS
3	DIV 1 TLF; RX MODE AND RELATED BYPASSES
4	DIV 2 TLF; RX MODE AND RELATED BYPASSES
5	DIV 3 TLF; RX MODE AND RELATED BYPASSES
6	DIV 4 TLF; RX MODE AND RELATED BYPASSES
7	DIV 1 BPU; BYPASS LOGIC TLF; BYPASS, CHANNEL SENSOR BYPASS, SPECIAL MSLI TRIP BYPASS
8	DIV 2 BPU; BYPASS LOGIC TLF; BYPASS, CHANNEL SENSOR BYPASS, SPECIAL MSLI TRIP BYPASS
9	DIV 3 BPU; BYPASS LOGIC TLF; BYPASS, CHANNEL SENSOR BYPASS, SPECIAL MSLI TRIP BYPASS
10	DIV 4 BPU; BYPASS LOGIC TLF; BYPASS, CHANNEL SENSOR BYPASS, SPECIAL MSLI TRIP BYPASS
11	DIV 1 DTF; CHANNEL A SENSOR TRIP LOGIC
12	DIV 2 DTF; CHANNEL B SENSOR TRIP LOGIC
13	DIV 3 DTF; CHANNEL C SENSOR TRIP LOGIC
14	DIV 4 DTF; CHANNEL D SENSOR TRIP LOGIC
15	DIV 1 DTF; CHANNEL A SENSOR TRIP LOGIC
16	DIV 2 DTF; CHANNEL B SENSOR TRIP LOGIC
17	DIV 3 DTF; CHANNEL C SENSOR TRIP LOGIC
18	DIV 4 DTF; CHANNEL D SENSOR TRIP LOGIC
19	DIV 1 TLF; NMS DIV 1 TRIP LOGIC
20	DIV 2 TLF; NMS DIV 2 TRIP LOGIC
21	DIV 3 TLF; NMS DIV 3 TRIP LOGIC
22	DIV 4 TLF; NMS DIV 4 TRIP LOGIC
23	DIV 1 TLF; RX PRESS DIV 1 TRIP, SUPPRESSION POOL TEMP, TSV CLOSURE DIV 1 TRIP LOGIC
24	DIV 2 TLF; RX PRESS DIV 2 TRIP, SUPPRESSION POOL TEMP, TSV CLOSURE DIV 2 TRIP LOGIC
25	DIV 3 TLF; RX PRESS DIV 3 TRIP, SUPPRESSION POOL TEMP, TSV CLOSURE DIV 3 TRIP LOGIC
26	DIV 4 TLF; RX PRESS DIV 4 TRIP, SUPPRESSION POOL TEMP, TSV CLOSURE DIV 4 TRIP LOGIC
27	DIV 1 TLF; TSV,TCV CLOSURE DIV 1 TRIP LOGIC
28	DIV 2 TLF; TSV,TCV CLOSURE DIV 2 TRIP LOGIC
29	DIV 3 TLF; TSV,TCV CLOSURE DIV 3 TRIP LOGIC
30	DIV 4 TLF; TSV,TCV CLOSURE DIV 4 TRIP LOGIC
31	DIV 1 TLF; MSLI DIV 1 TRIP LOGIC
32	DIV 2 TLF; MSLI DIV 2 TRIP LOGIC
33	DIV 3 TLF; MSLI DIV 3 TRIP LOGIC
34	DIV 4 TLF; MSLI DIV 4 TRIP LOGIC
35	BLANK
36	BLANK

SH NO.	TITLE
37	BLANK
38	BLANK
39	DIV 1 TLF; DW PRESS DIV 1 TRIP LOGIC
40	DIV 2 TLF; DW PRESS DIV 2 TRIP LOGIC
41	DIV 3 TLF; DW PRESS DIV 3 TRIP LOGIC
42	DIV 4 TLF; DW PRESS DIV 4 TRIP LOGIC
43	DIV 1 TLF; RX WTR LVL DIV 1, CRD PRESS DIV 1 TRIP LOGIC
44	DIV 2 TLF; RX WTR LVL DIV 2, CRD PRESS DIV 2 TRIP LOGIC
45	DIV 3 TLF; RX WTR LVL DIV 3, CRD PRESS DIV 3 TRIP LOGIC
46	DIV 4 TLF; RX WTR LVL DIV 4, CRD PRESS DIV 4 TRIP LOGIC
47	DIV 1 TLF; DIV 1 AUTO-SCRAM LOGIC
48	DIV 2 TLF; DIV 2 AUTO-SCRAM LOGIC
49	DIV 3 TLF; DIV 3 AUTO-SCRAM LOGIC
50	DIV 4 TLF; DIV 4 AUTO-SCRAM LOGIC
51	DIV 1 TLF; TRIP IN CH A BYPASSED SENSOR
52	DIV 2 TLF; TRIP IN CH B BYPASSED SENSOR
53	DIV 3 TLF; TRIP IN CH C BYPASSED SENSOR
54	DIV 4 TLF; TRIP IN CH D BYPASSED SENSOR
55	DIV 2 PDLU; MANUAL SCRAM, SEAL-IN AND MANUAL SCRAM RESET LOGIC
56	DIV 3 PDLU; MANUAL SCRAM, SEAL-IN AND MANUAL SCRAM RESET LOGIC
57	DIV 1 OLU; DIV 1 AUTO SCRAM, SEAL-IN, RESET, MANUAL TRIP AND LD TEST LOGIC
58	DIV 2 OLU; DIV 2 AUTO SCRAM, SEAL-IN, RESET, MANUAL TRIP AND LD TEST LOGIC
59	DIV 3 OLU; DIV 3 AUTO SCRAM, SEAL-IN, RESET, MANUAL TRIP AND LD TEST LOGIC
60	DIV 4 OLU; DIV 4 AUTO SCRAM, SEAL-IN, RESET, MANUAL TRIP AND LD TEST LOGIC
61	GROUP 1 LD ARRANGEMENT AND HCU'S
62	GROUP 2 LD ARRANGEMENT AND HCU'S
63	GROUP 3 LD ARRANGEMENT AND HCU'S
64	GROUP 4 LD ARRANGEMENT AND HCU'S
65	BACKUP SCRAM RELAY ARRANGEMENT AND RESET PERMISSIVE LOGIC
66	BACKUP SCRAM RELAY ARRANGEMENT AND RESET PERMISSIVE LOGIC
67	RPS ALARMS
68	RPS ALARMS
69	RPS ALARMS
70	RPS ALARMS
71	RPS ALARMS
72	RPS ALARMS

SUPPORTING DOCUMENTS:	MPL NO.
1. REACTOR PROTECTION SYS DESIGN SPEC	C71-4010
2. REACTOR PROTECTION SYS IED	C71-1040
3. NEUTRON MONITORING SYS IED	C51-1040
4. IBD STANDARDS DESIGN STANDARDS	A10-3070

REFERENCES:	MPL NO.
1. NEUTRON MONITORING SYS IBD	C51-1030
2. LEAK DETECTION SYSTEM IBD	E31-1030
3. ROD CONTROL & INFO SYSTEM IBD	C11-1030
4. CONTROL ROD DRIVE SYSTEM P&ID	C12-1010
5. PROCESS RAD MONITORING SYS IED	D11-1040
6. NUCLEAR BOILER SYS P&ID	B21-1010
7. RECIRC FLOW CONTROL SYS IBD	C81-1030
8. SUPPRESSION POOL TEMPERATURE MONITORING SYSTEM IED	T53-1010

ABREVIATIONS

BPU - BYPASS UNITS
DTF - DIGITAL TRIP FUNCTION
RDLC - REMOTE DIGITAL LOGIC CONTROLLER
TLF - TRIP LOGIC FUNCTION
SLF - SAFETY SYSTEM LOGIC FUNCTION
OLU - OUTPUT LOGIC UNIT
PDLU - POWER DISTRIBUTION LOGIC UNIT
SCC - SOLENOID CONTROL CENTER
SSFP - SCRAM SOLENOID FUSE PANEL
SSLC - SAFETY SYSTEM LOGIC & CONTROL
APRM - AVERAGE POWER RANGE MONITOR
CRD - CONTROL ROD DRIVE
HCU - HYDRAULIC CONTROL UNIT
MSIV - MAIN STEAM LINE ISOLATION VALVE
MSL - MAIN STEAM LINE
SRNM - STARTUP RANGE NEUTRON MONITOR
mP - MICROPROCESSOR
LD - LOAD DRIVER
KOS - KEY OPERATED SWITCH
HTS - HYDRAULIC TRIP SYSTEM

TABLE OF CONTENTS. REFERENCE DOCUMENTS, SUPPORTING DOCUMENTS, ABREVIATIONS

Figure 7.2-10 – Reactor Protection System IBD (Sheet 2 of 72)

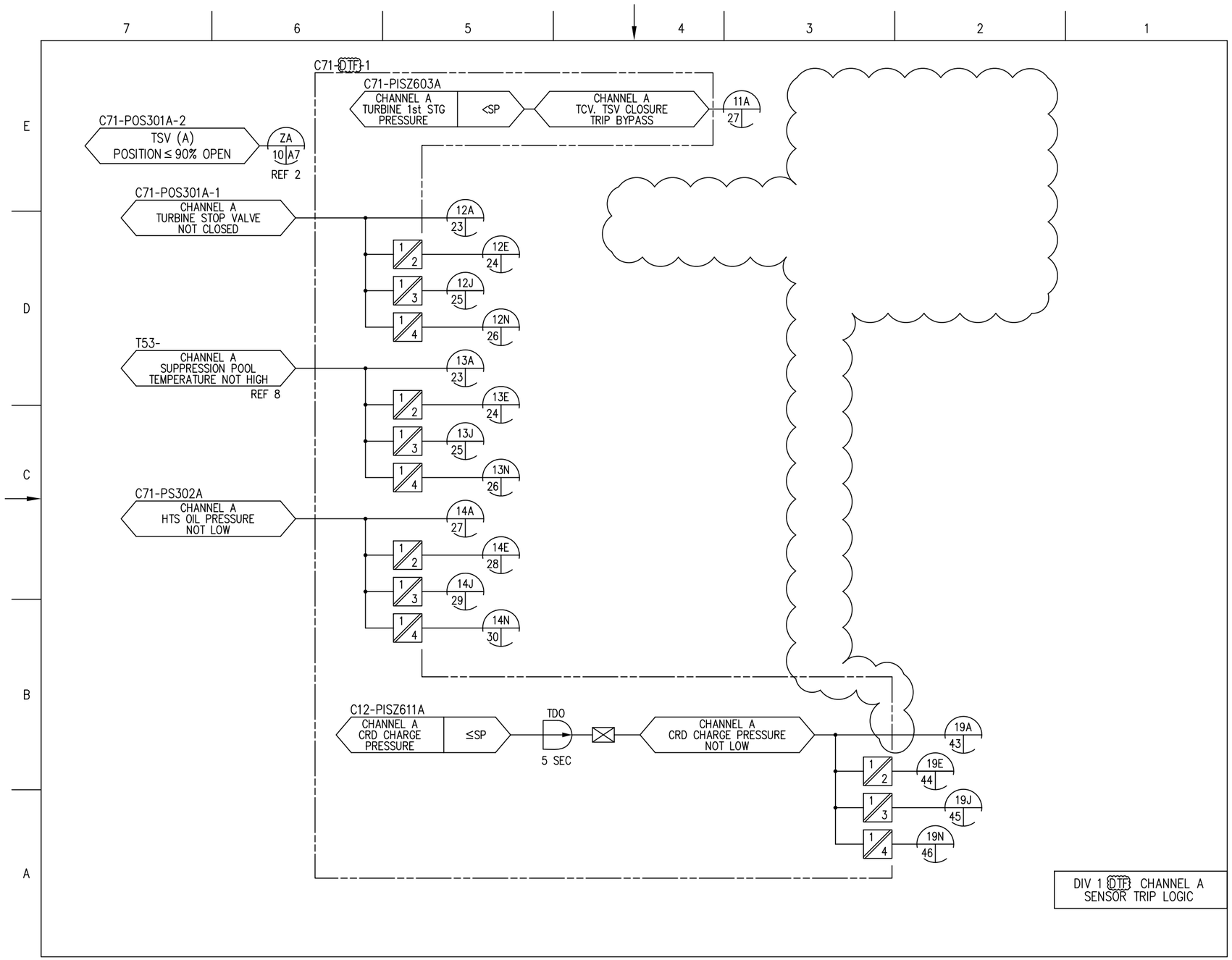

Figure 7.2-10 – Reactor Protection System IBD (Sheet 11 of 72)

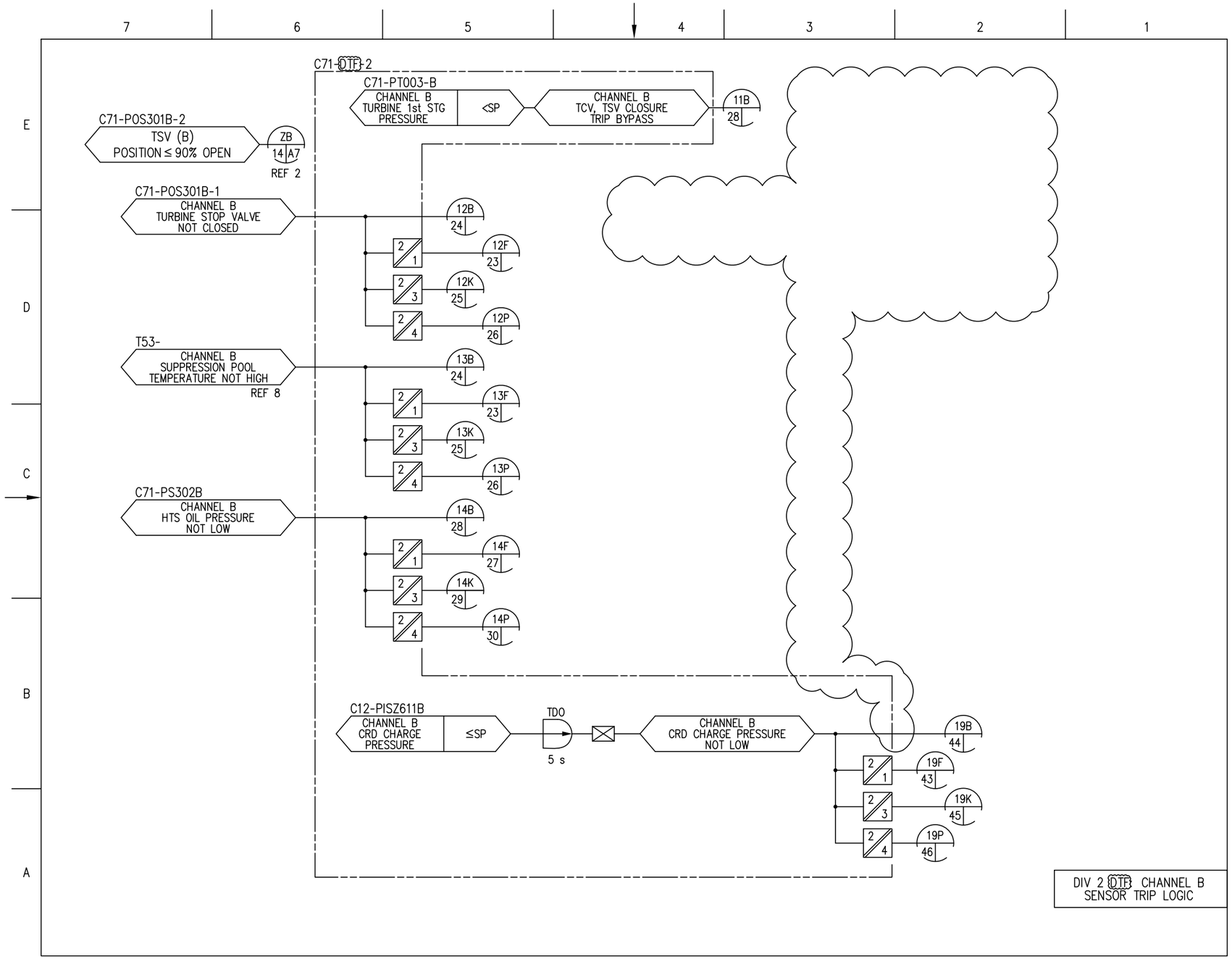

Figure 7.2-10 – Reactor Protection System IBD (Sheet 12 of 72)

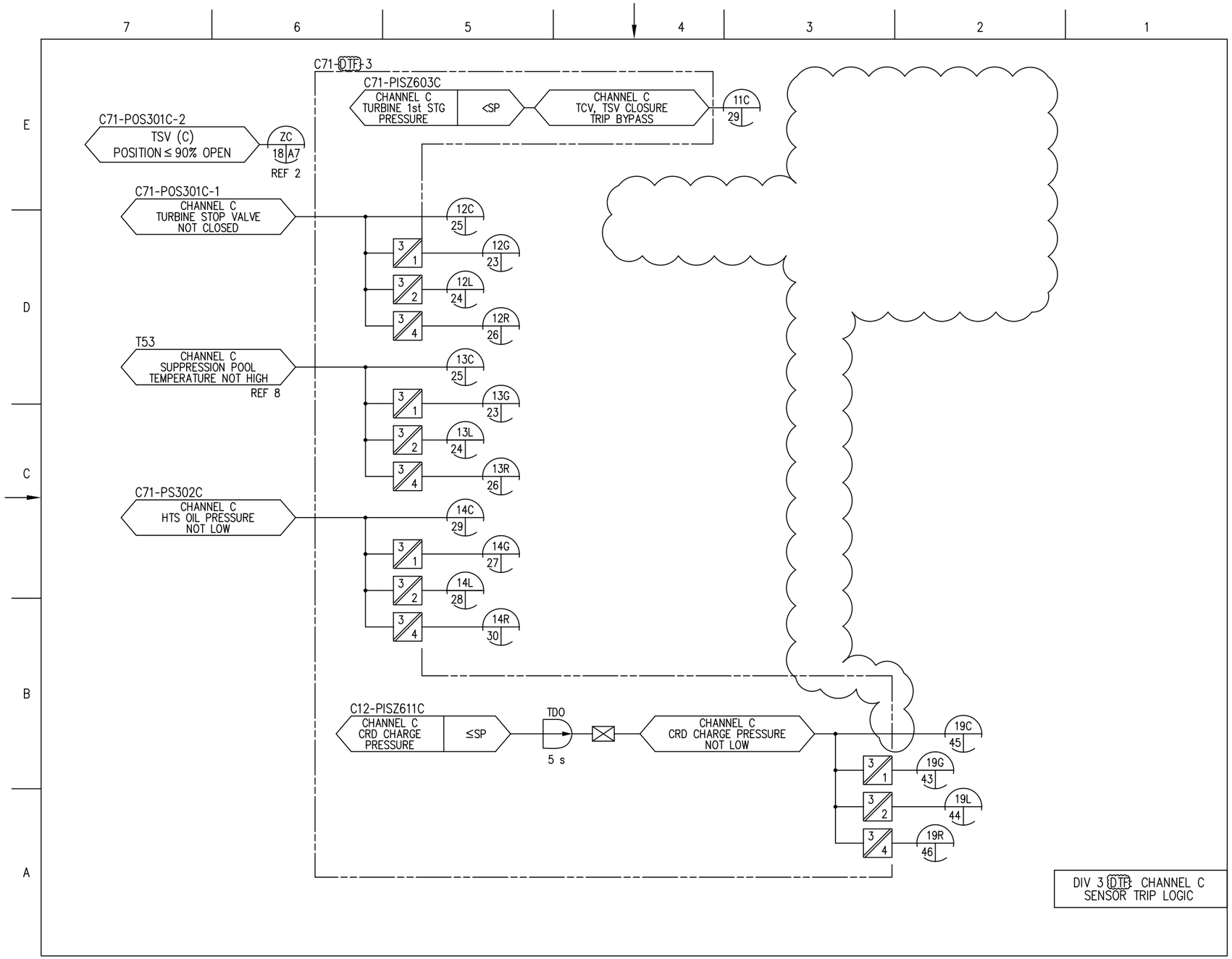

Figure 7.2-10 – Reactor Protection System IBD (Sheet 13 of 72)

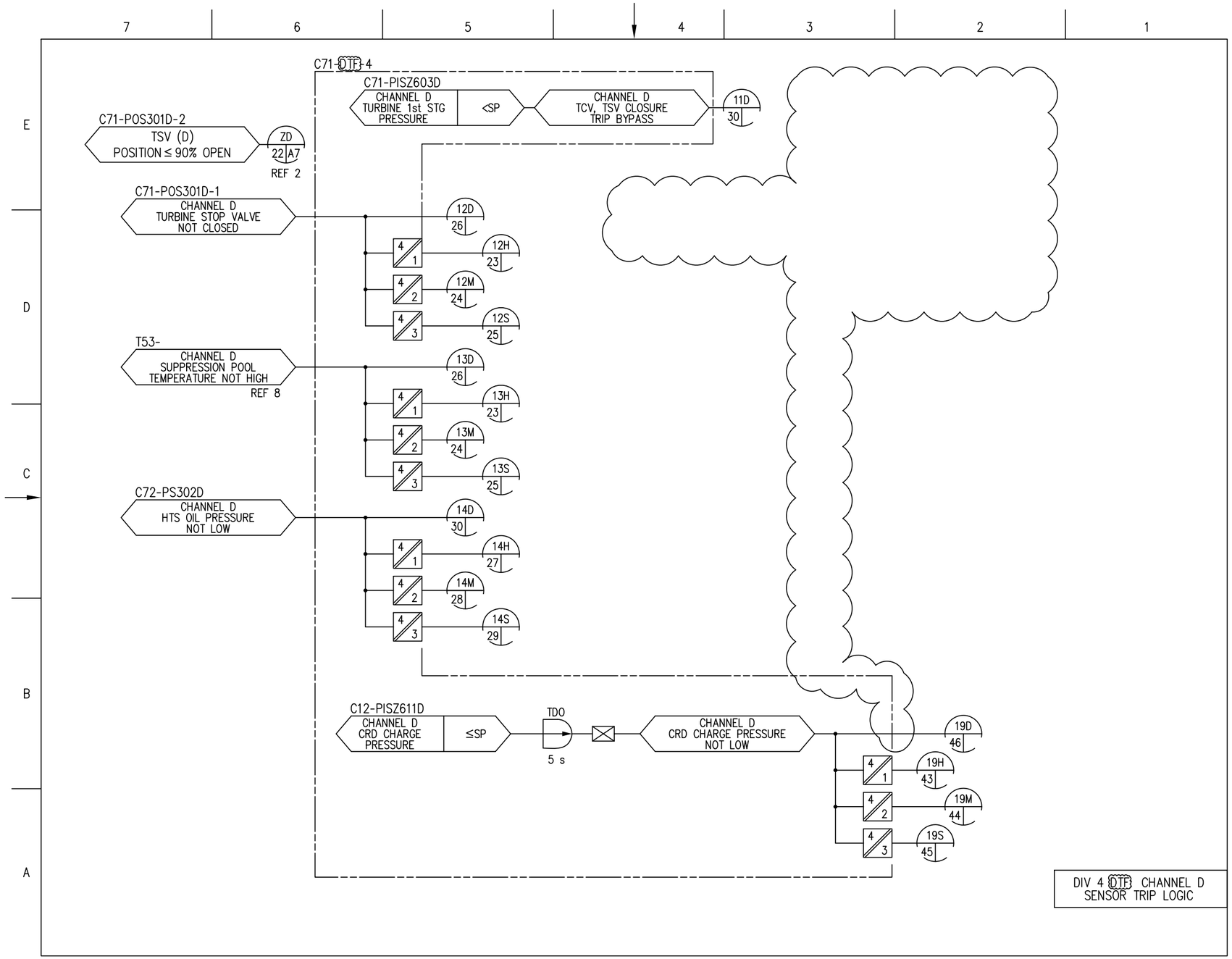

Figure 7.2-10 – Reactor Protection System IBD (Sheet 14 of 72)

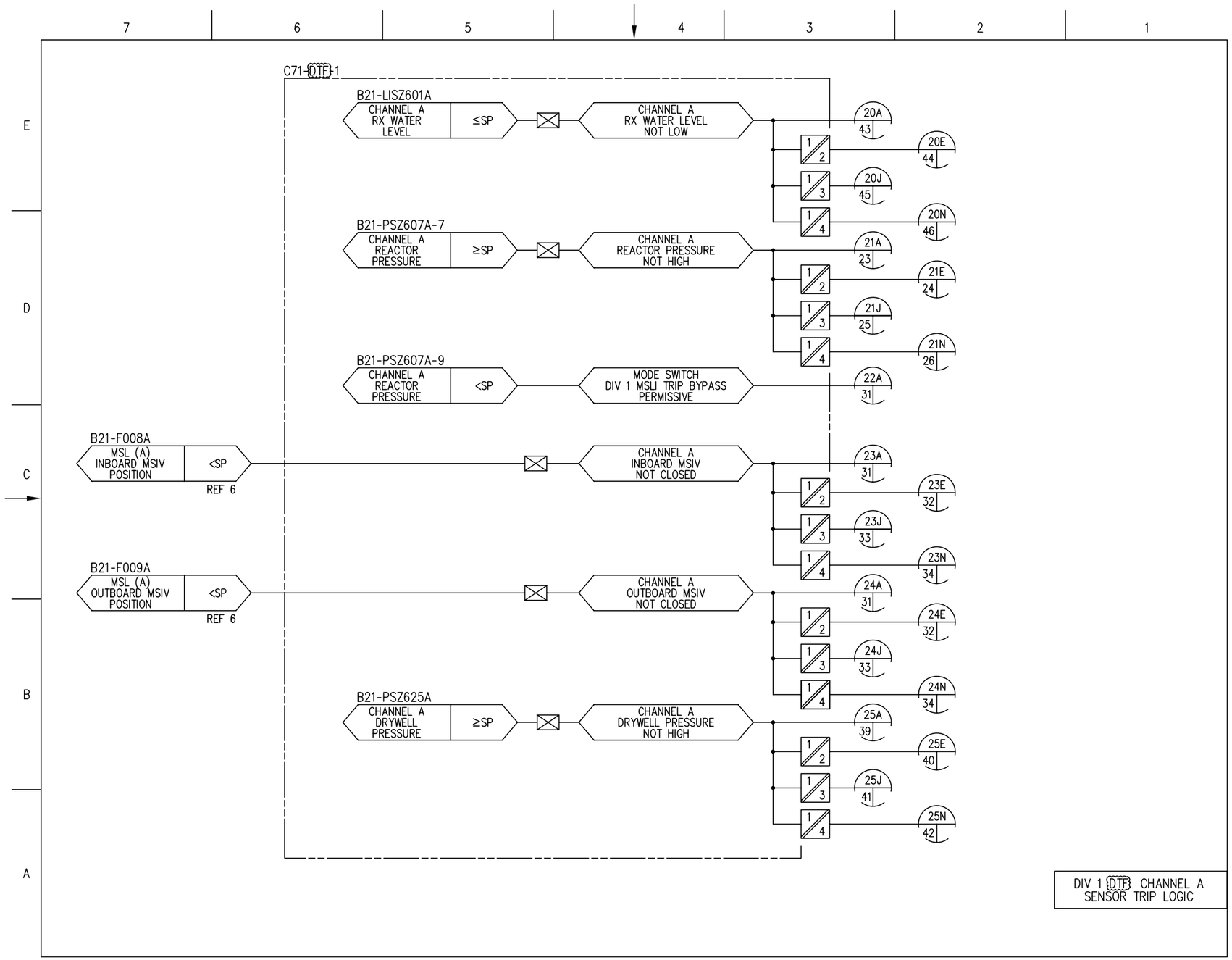

Figure 7.2-10 – Reactor Protection System IBD (Sheet 15 of 72)

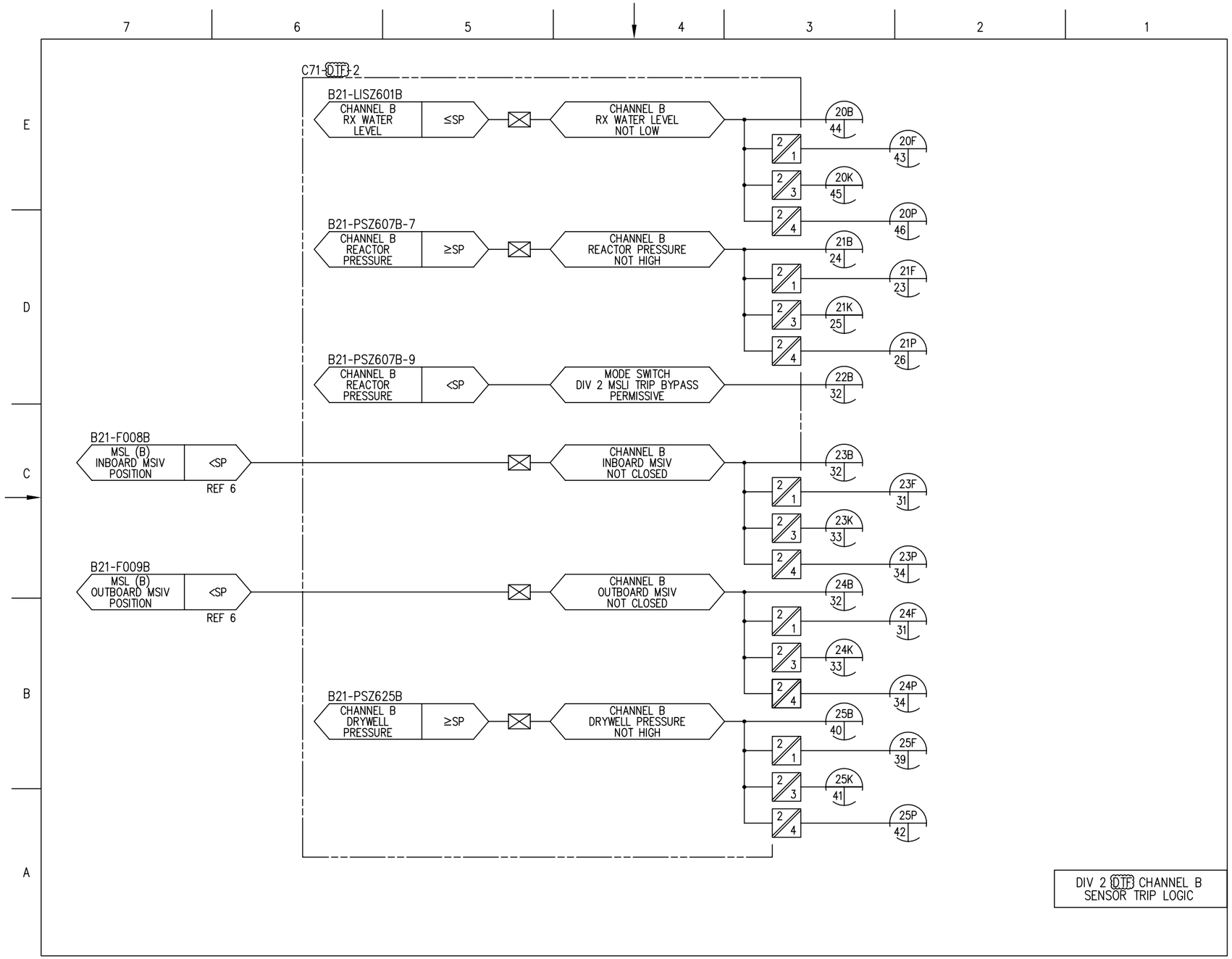

Figure 7.2-10 – Reactor Protection System IBD (Sheet 16 of 72)

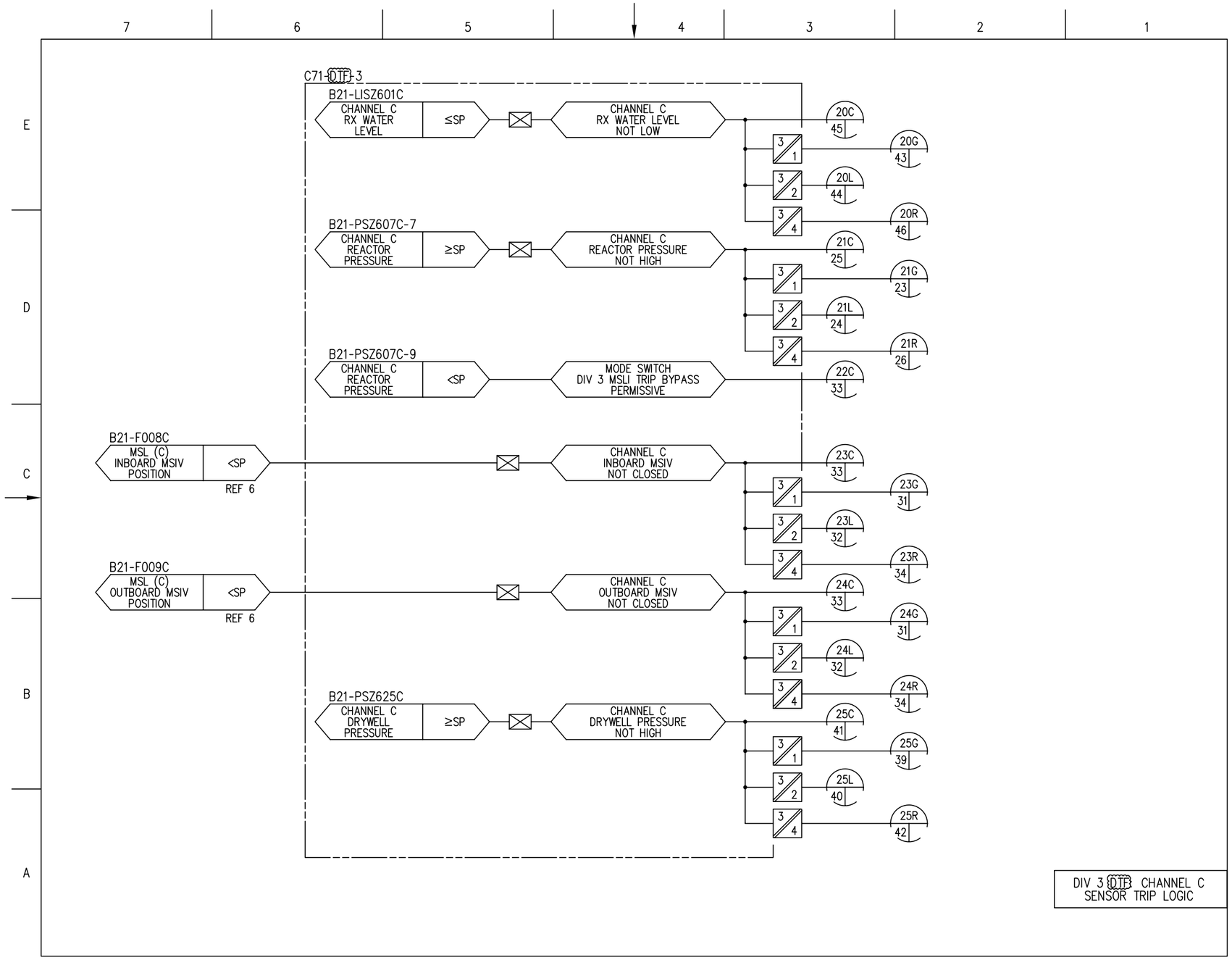

Figure 7.2-10 – Reactor Protection System IBD (Sheet 17 of 72)

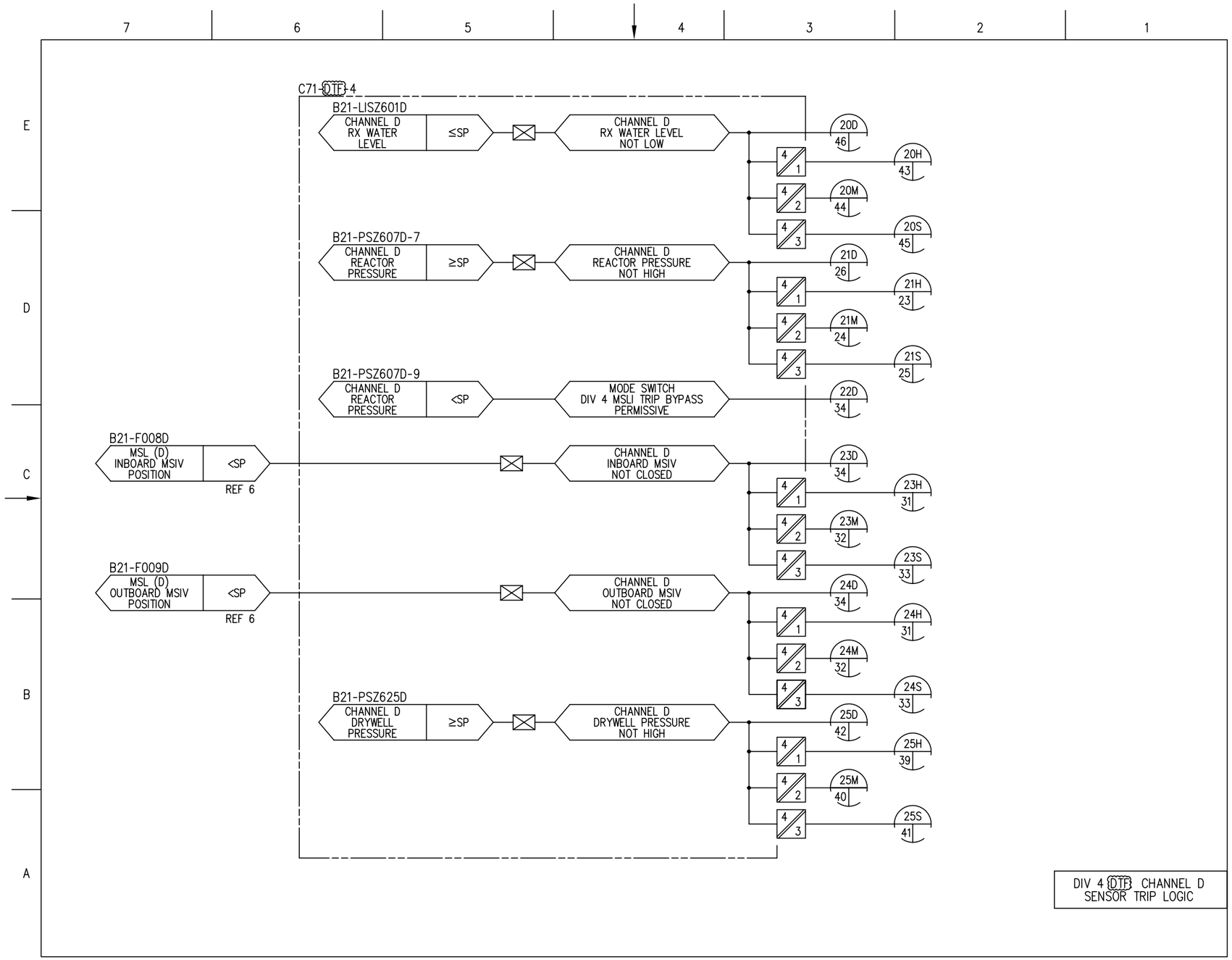

Figure 7.2-10 – Reactor Protection System IBD (Sheet 18 of 72)

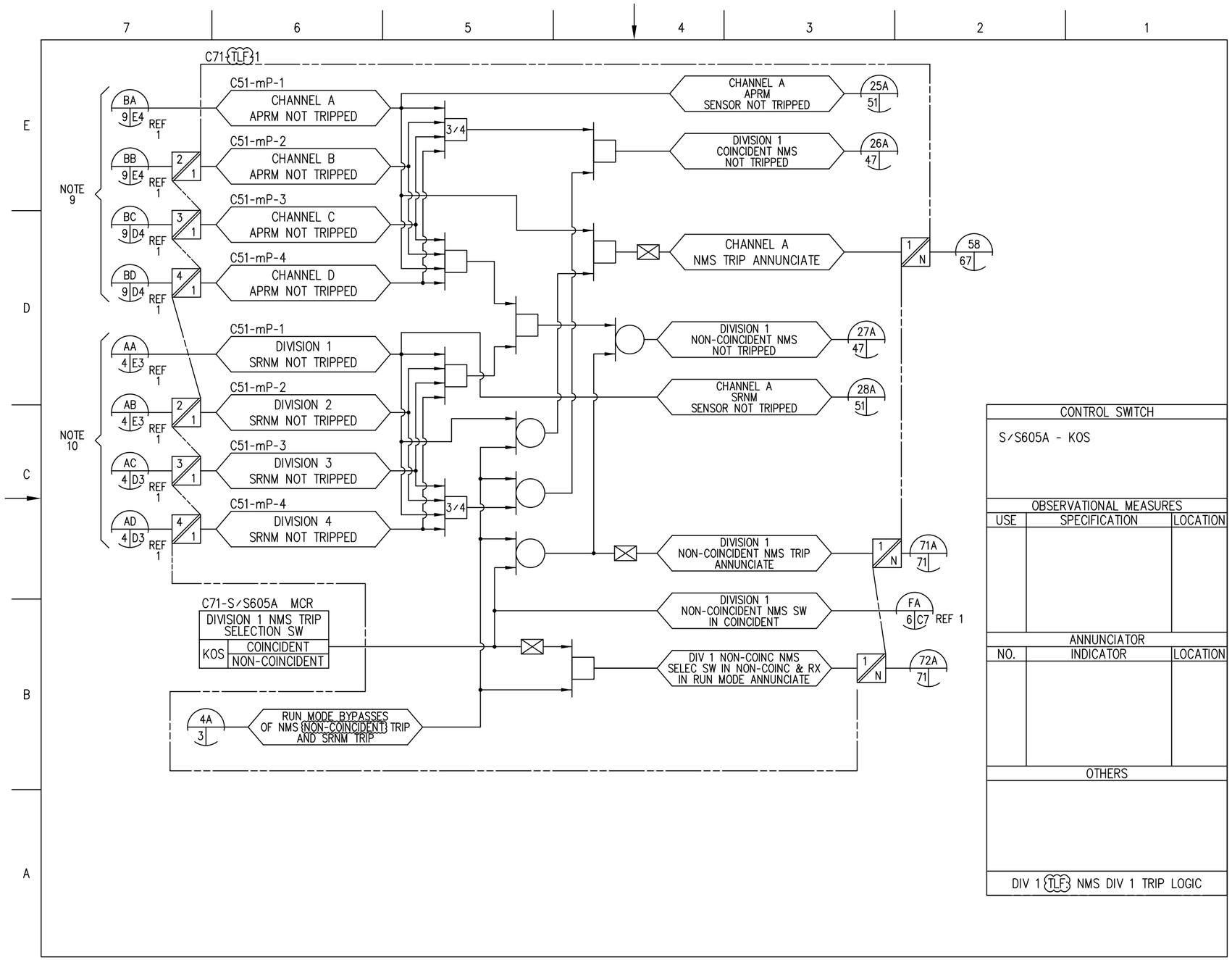

Figure 7.2-10 – Reactor Protection System IBD (Sheet 19 of 72)

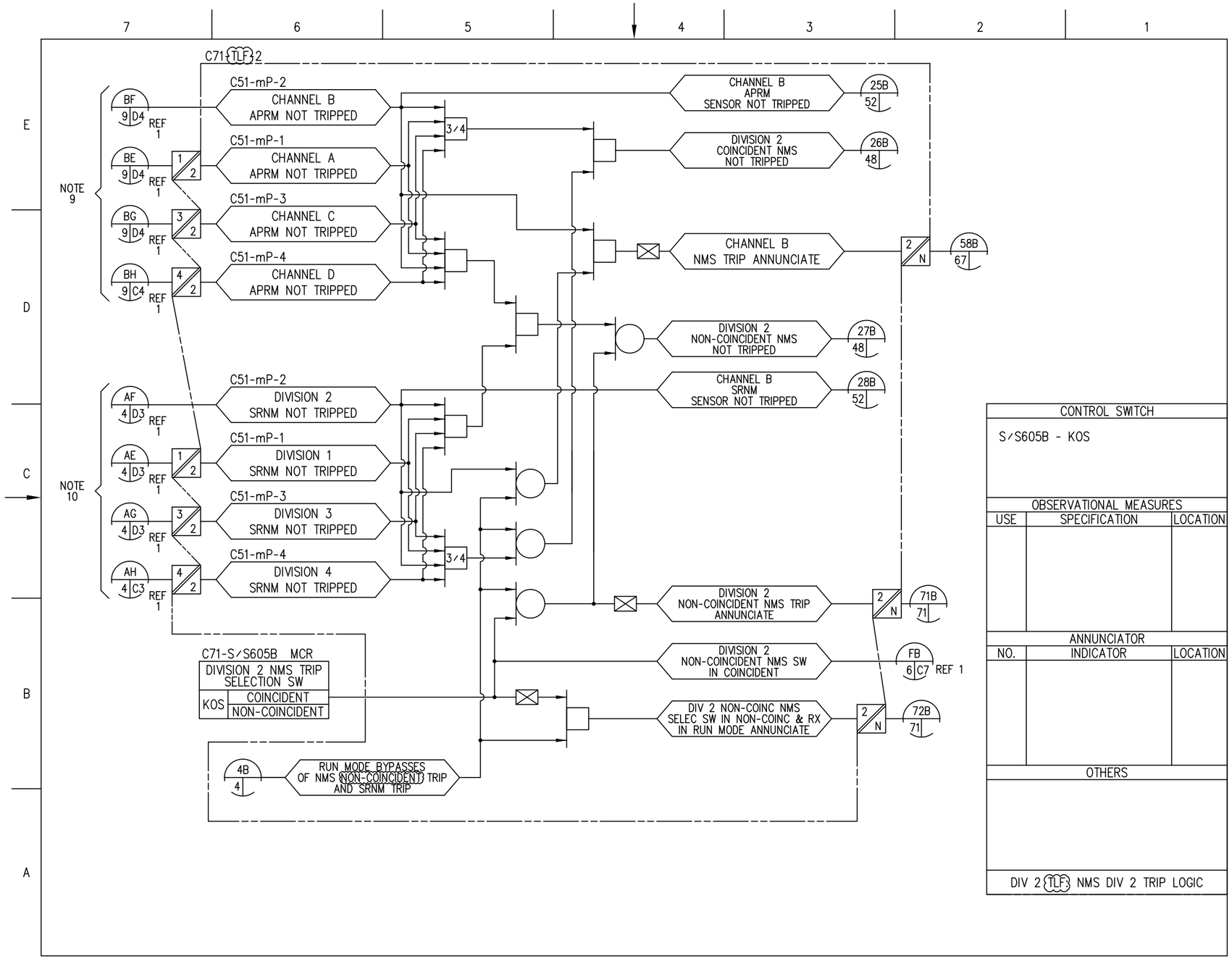

Figure 7.2-10 – Reactor Protection System IBD (Sheet 20 of 72)

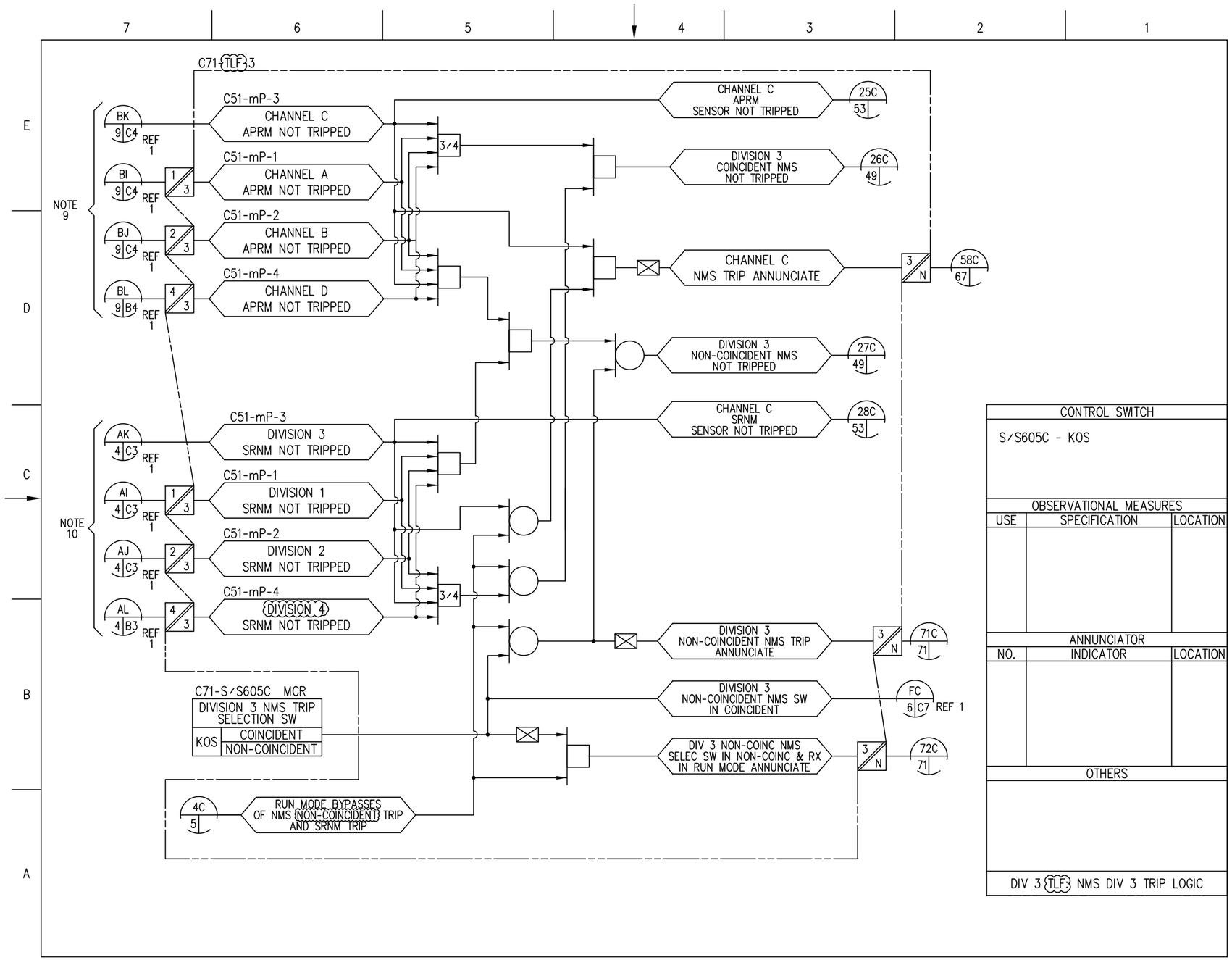

Figure 7.2-10 – Reactor Protection System IBD (Sheet 21 of 72)

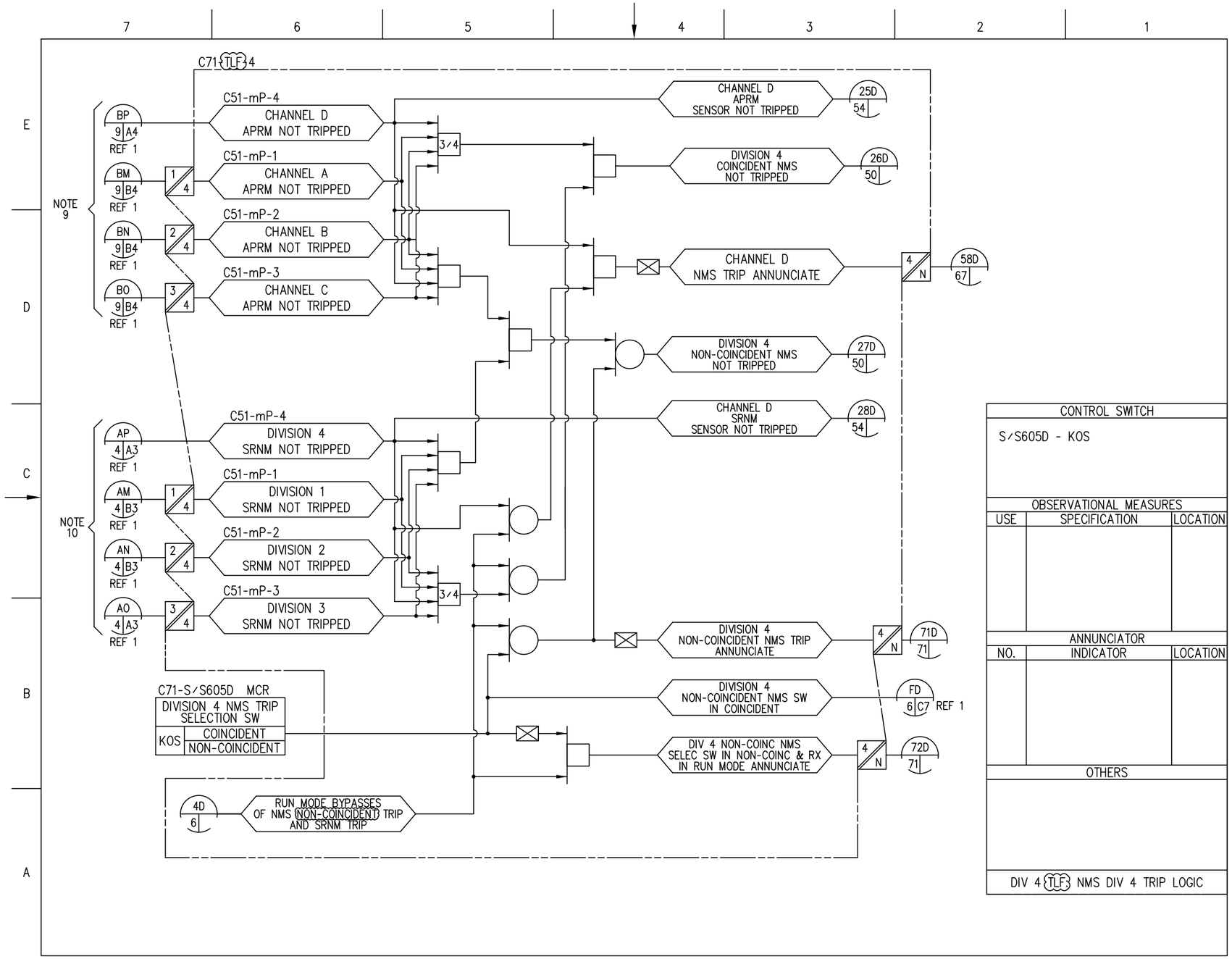

Figure 7.2-10 – Reactor Protection System IBD (Sheet 22 of 72)

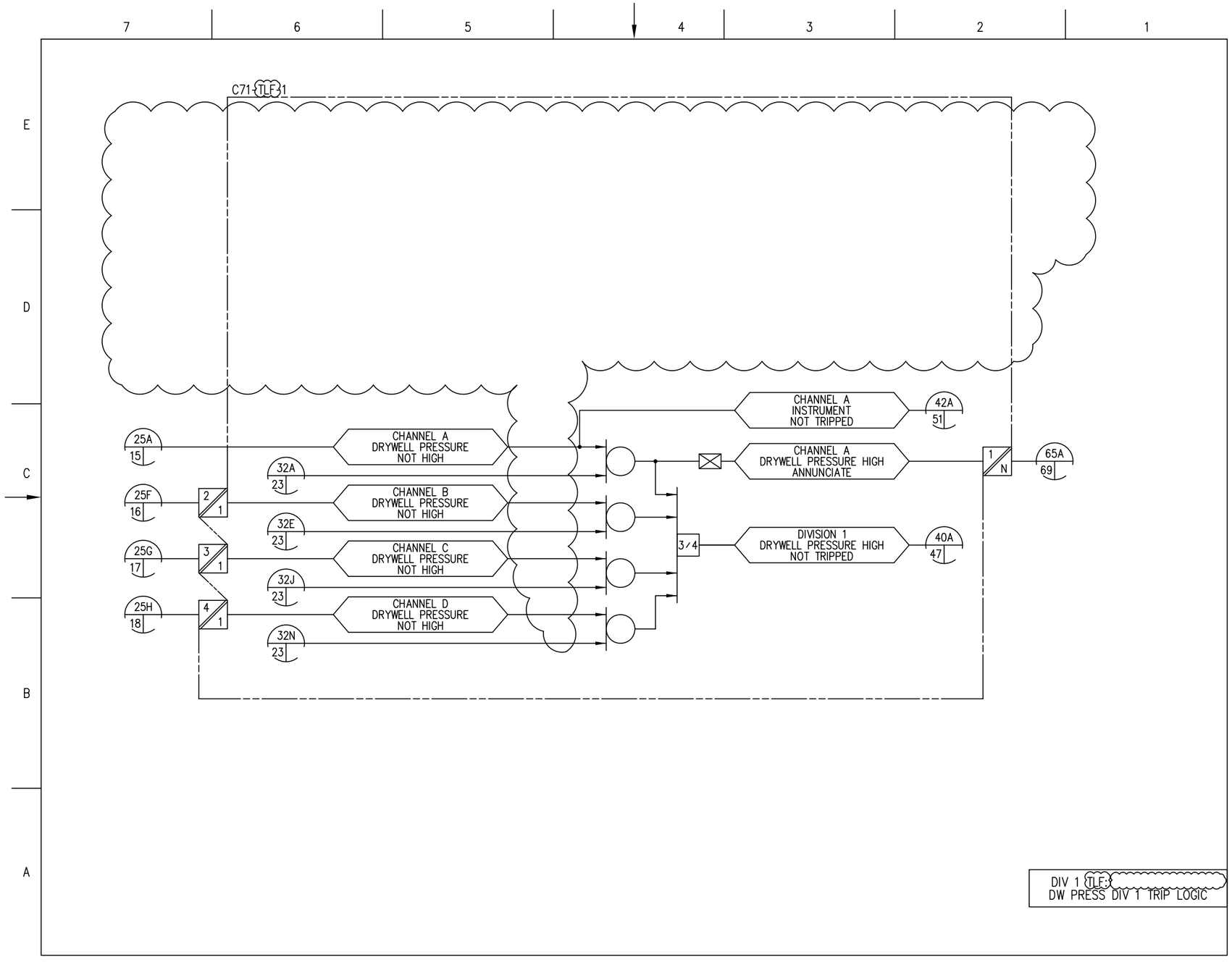

Figure 7.2-10 – Reactor Protection System IBD (Sheet 39 of 72)

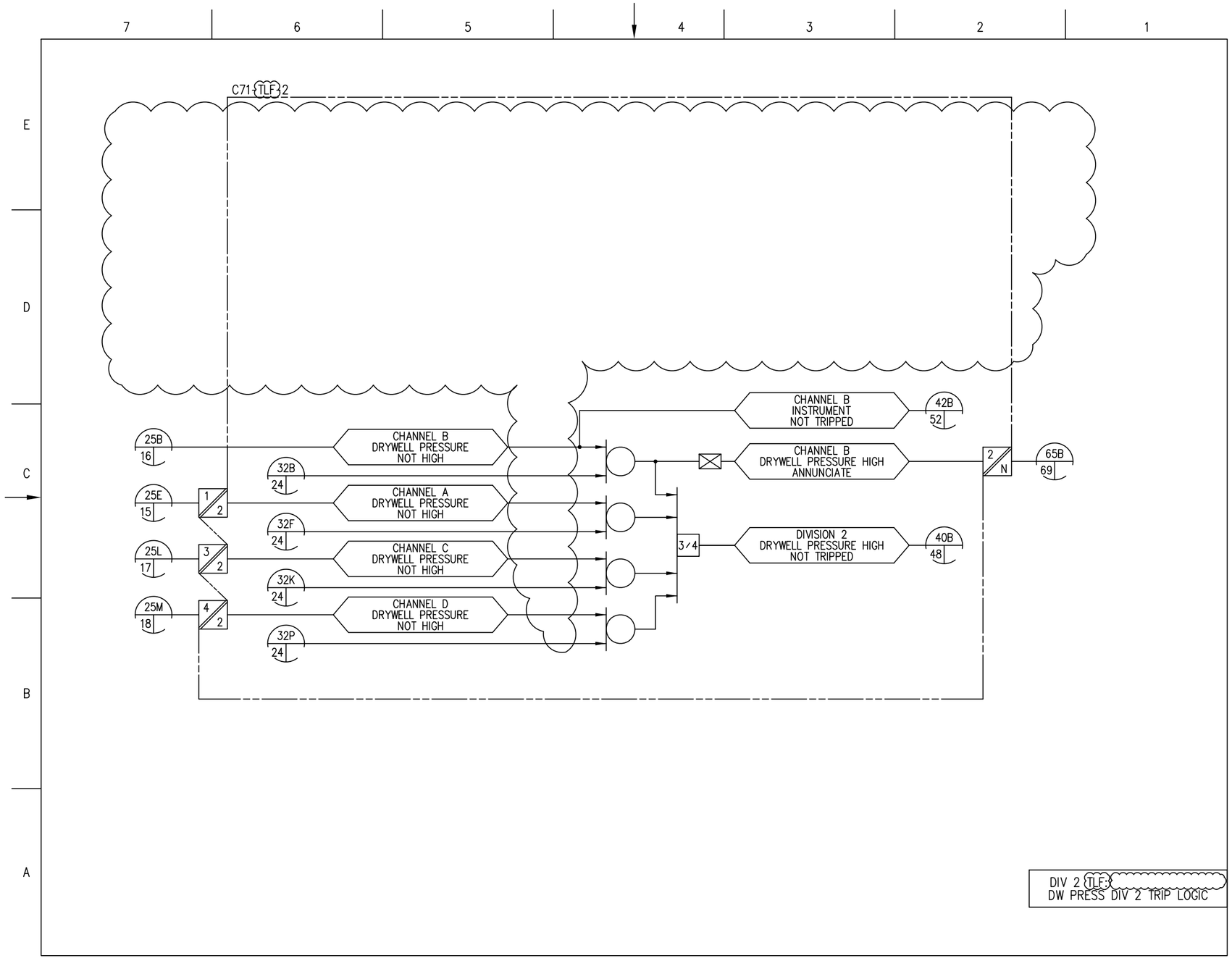

Figure 7.2-10 – Reactor Protection System IBD (Sheet 40 of 72)

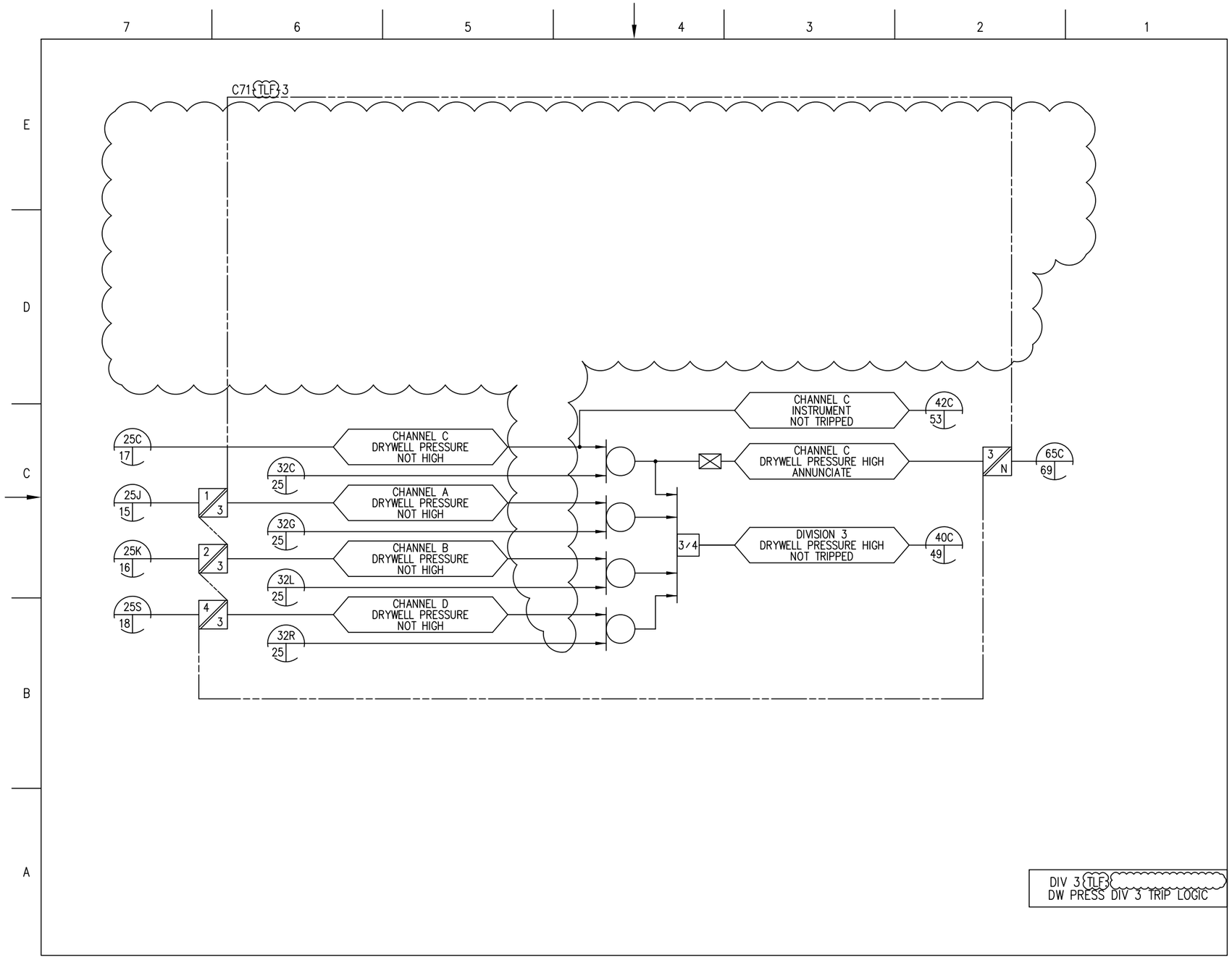

Figure 7.2-10 – Reactor Protection System IBD (Sheet 41 of 72)

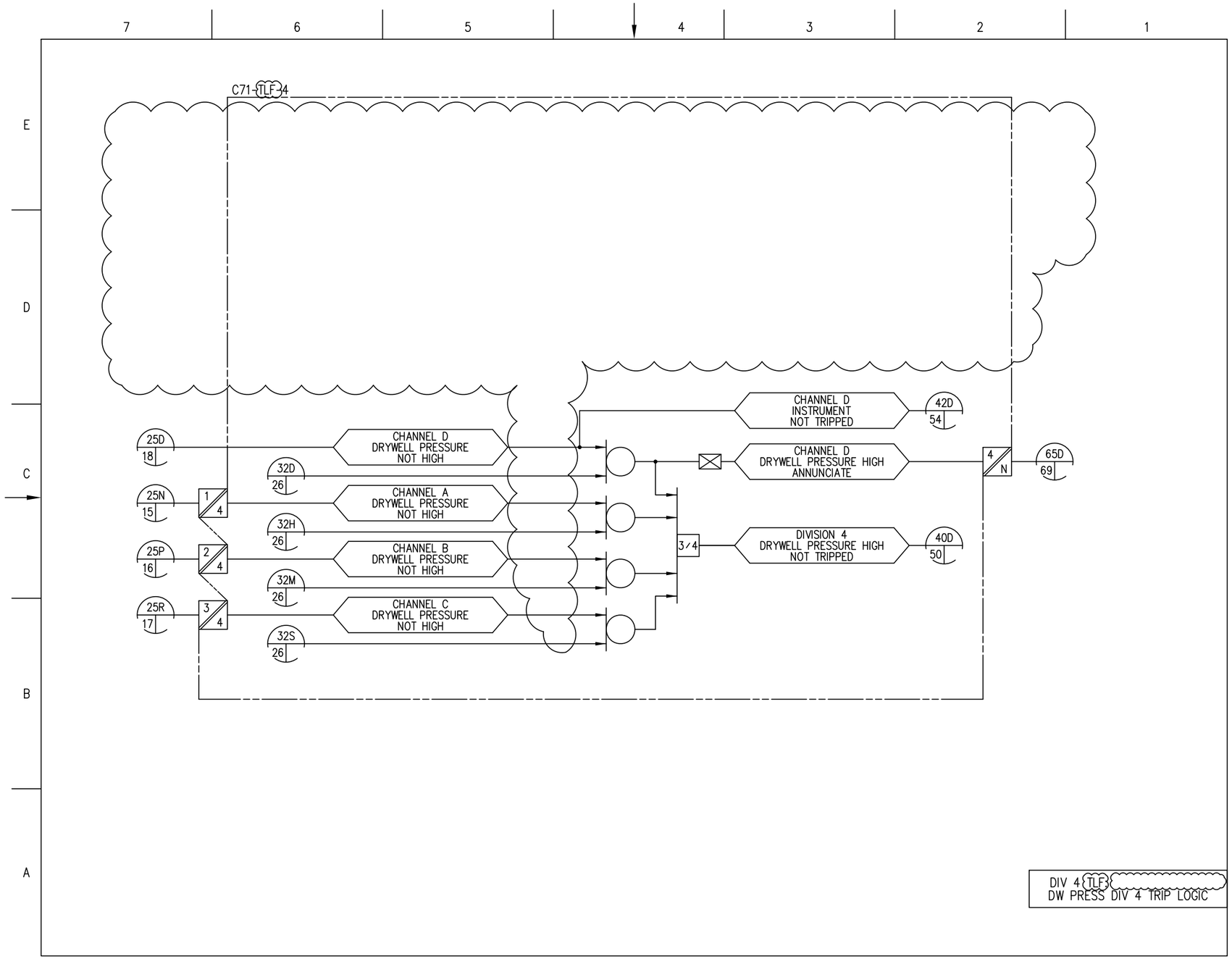

Figure 7.2-10 – Reactor Protection System IBD (Sheet 42 of 72)

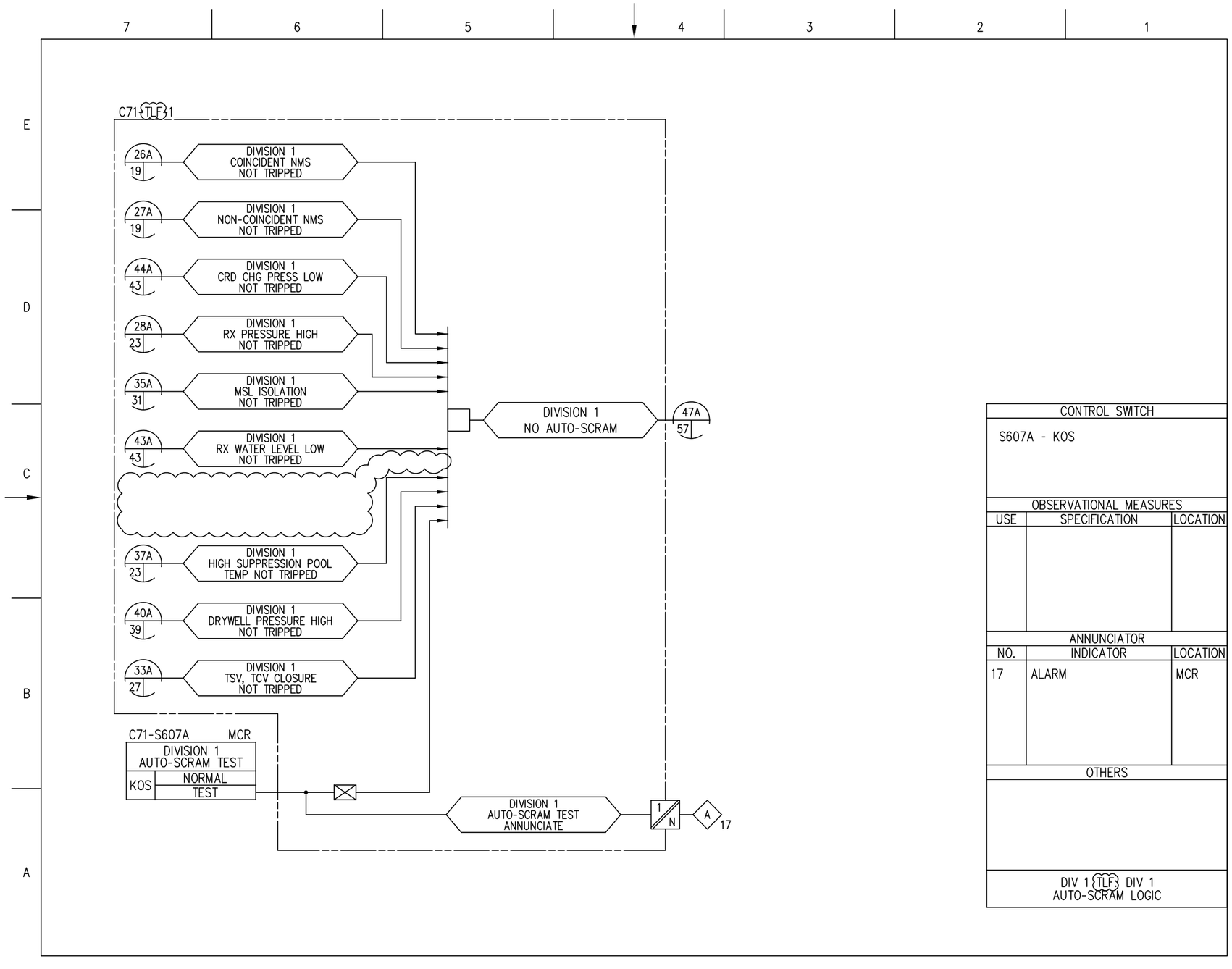

Figure 7.2-10 – Reactor Protection System IBD (Sheet 47 of 72)

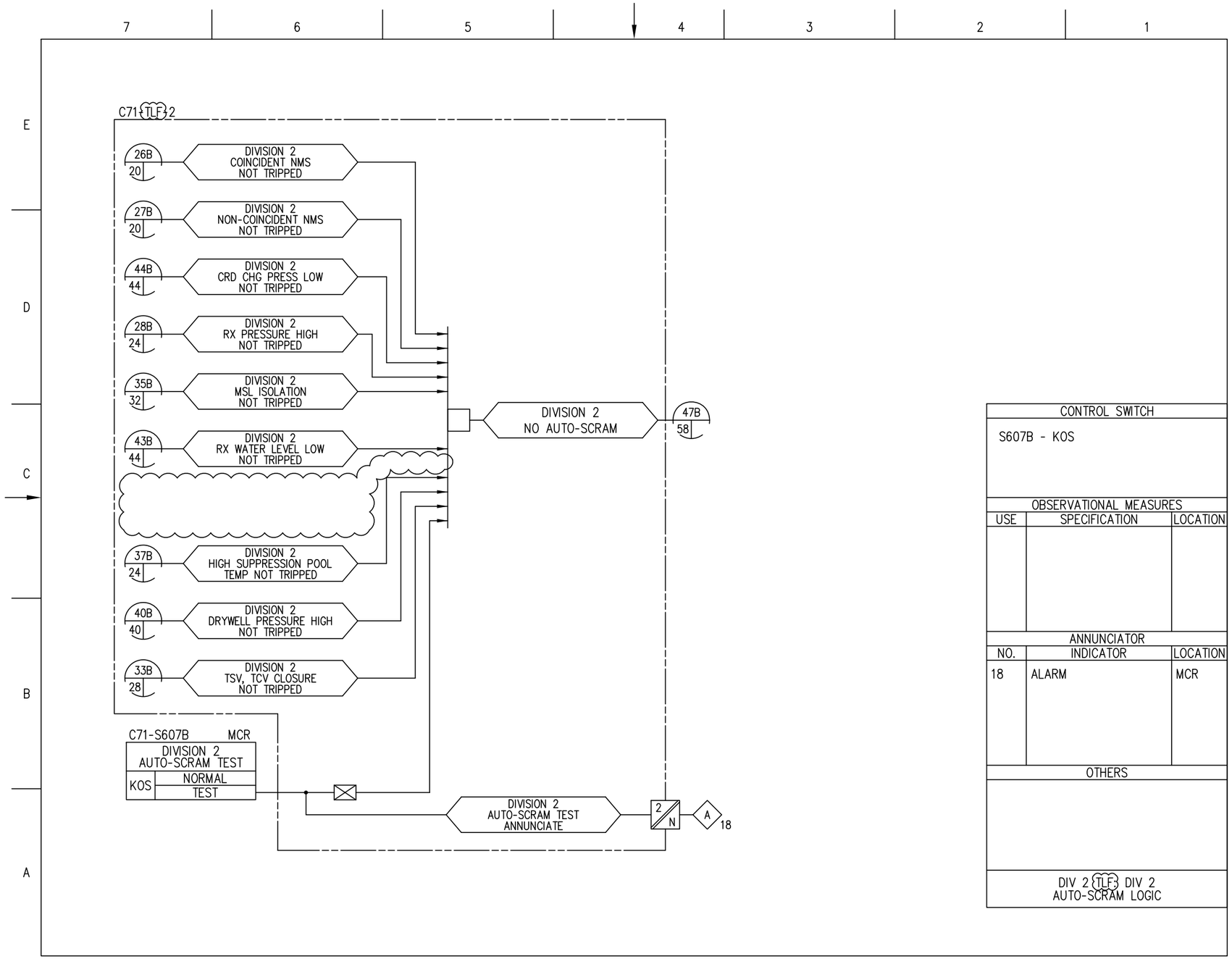

Figure 7.2-10 – Reactor Protection System IBD (Sheet 48 of 72)

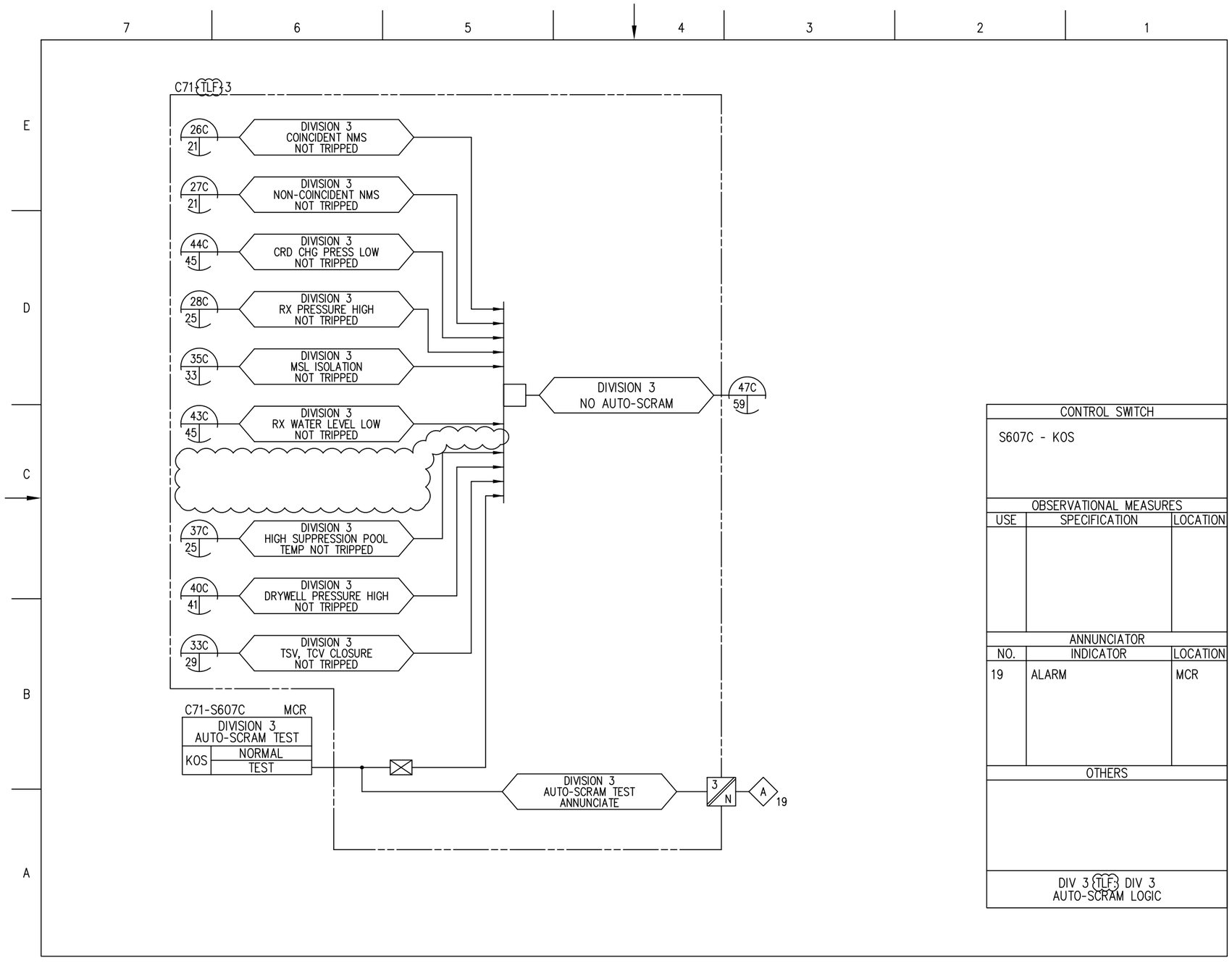

Figure 7.2-10 – Reactor Protection System IBD (Sheet 49 of 72)

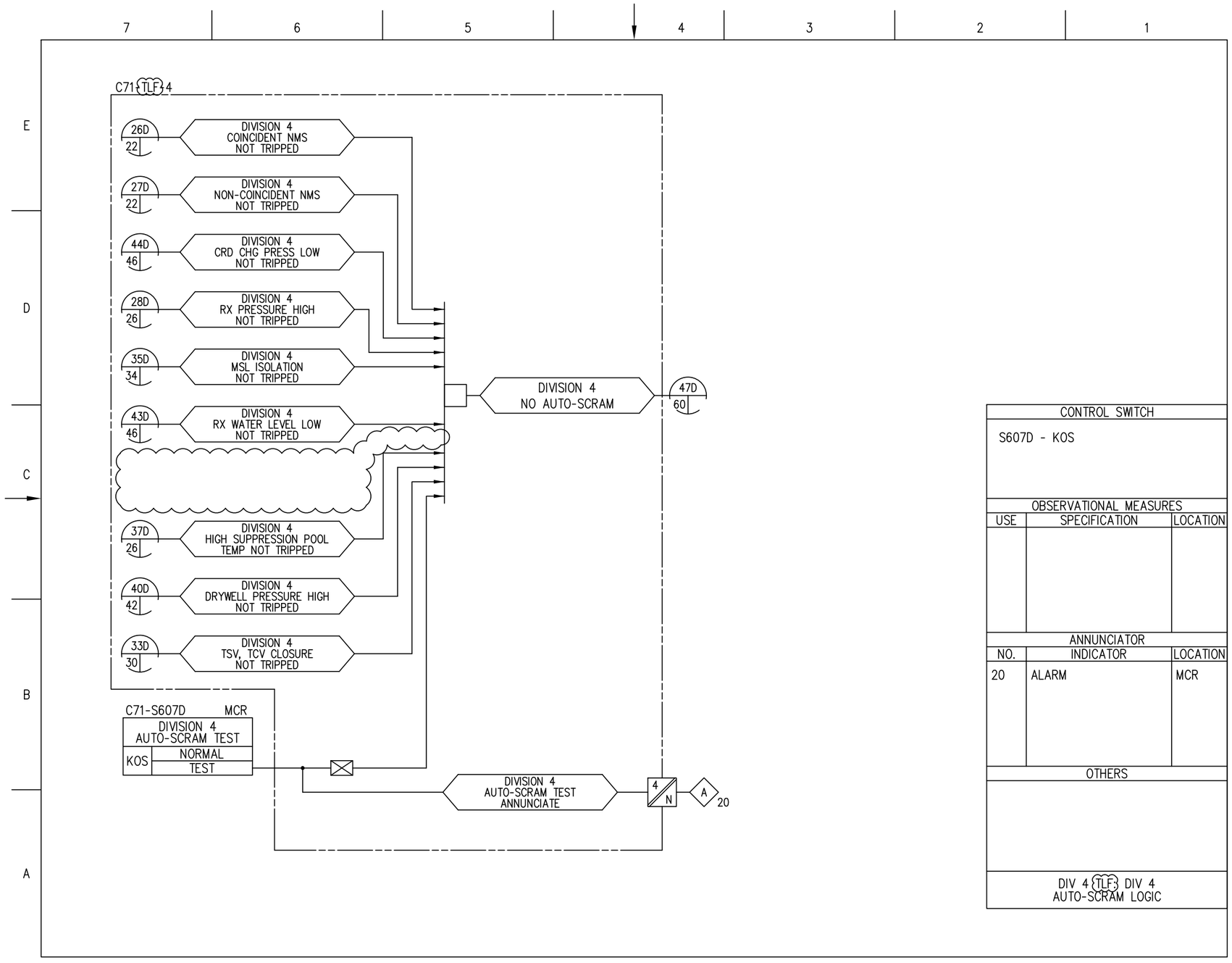

Figure 7.2-10 – Reactor Protection System IBD (Sheet 50 of 72)

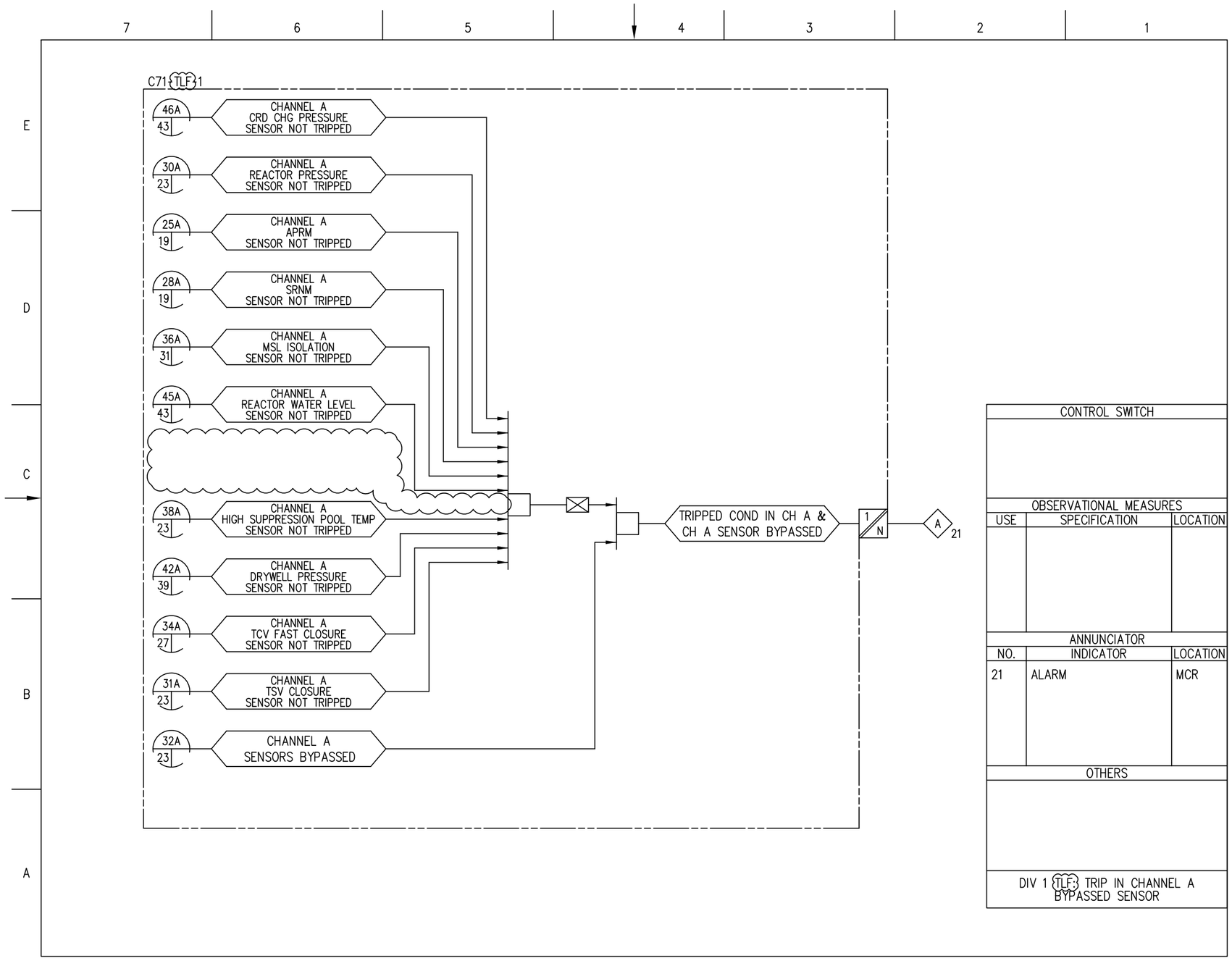

Figure 7.2-10 – Reactor Protection System IBD (Sheet 51 of 72)

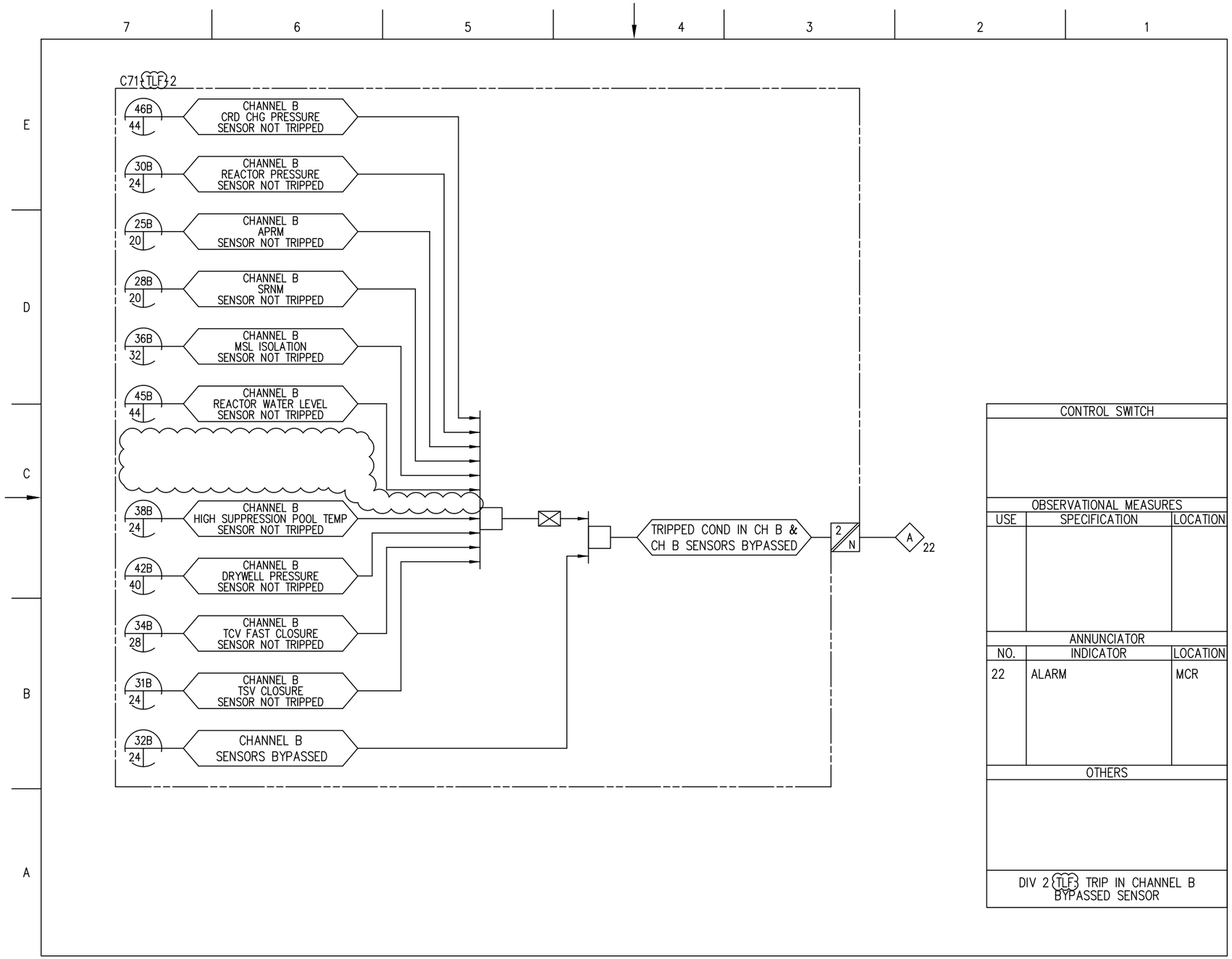

Figure 7.2-10 – Reactor Protection System IBD (Sheet 52 of 72)

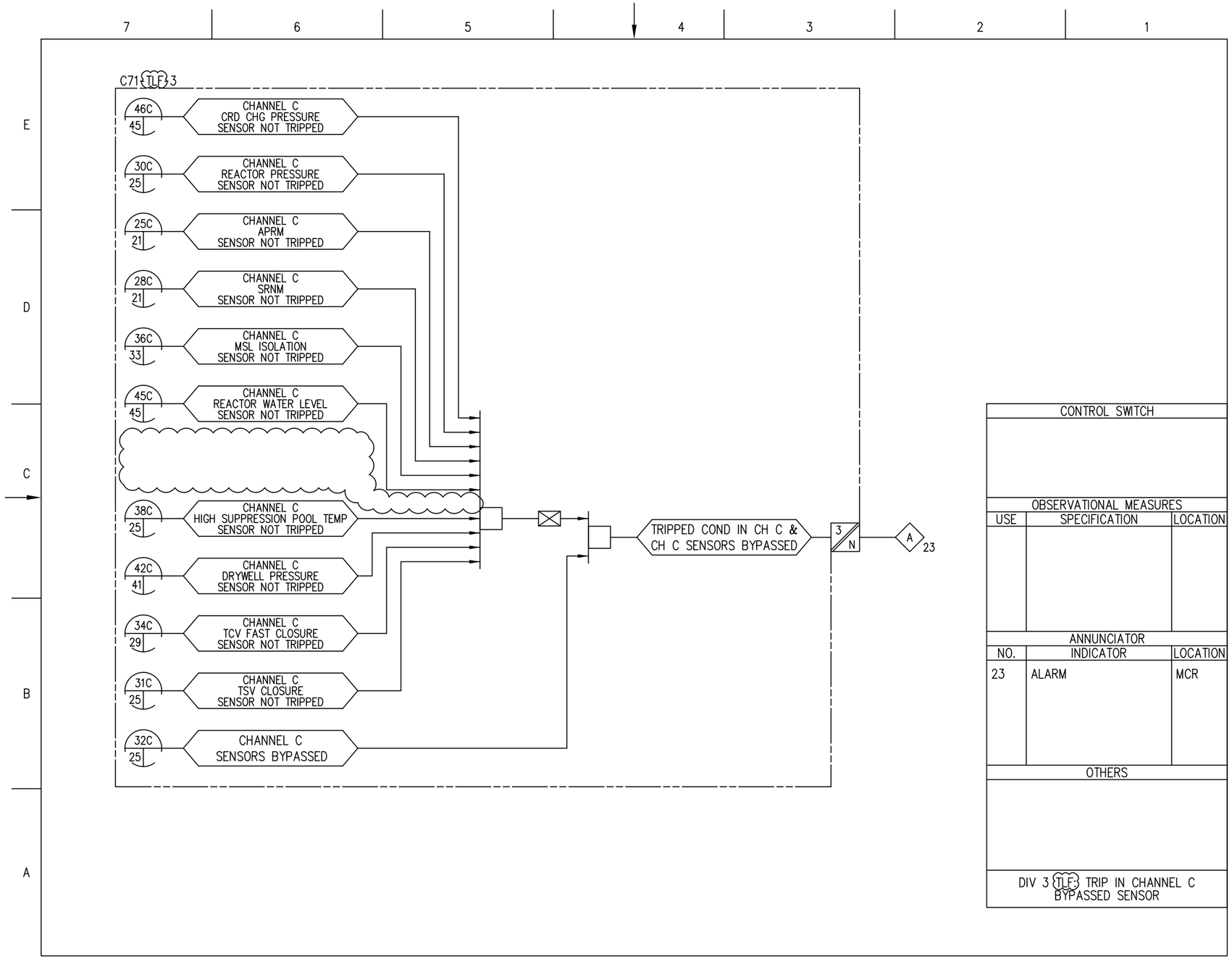

Figure 7.2-10 – Reactor Protection System IBD (Sheet 53 of 72)

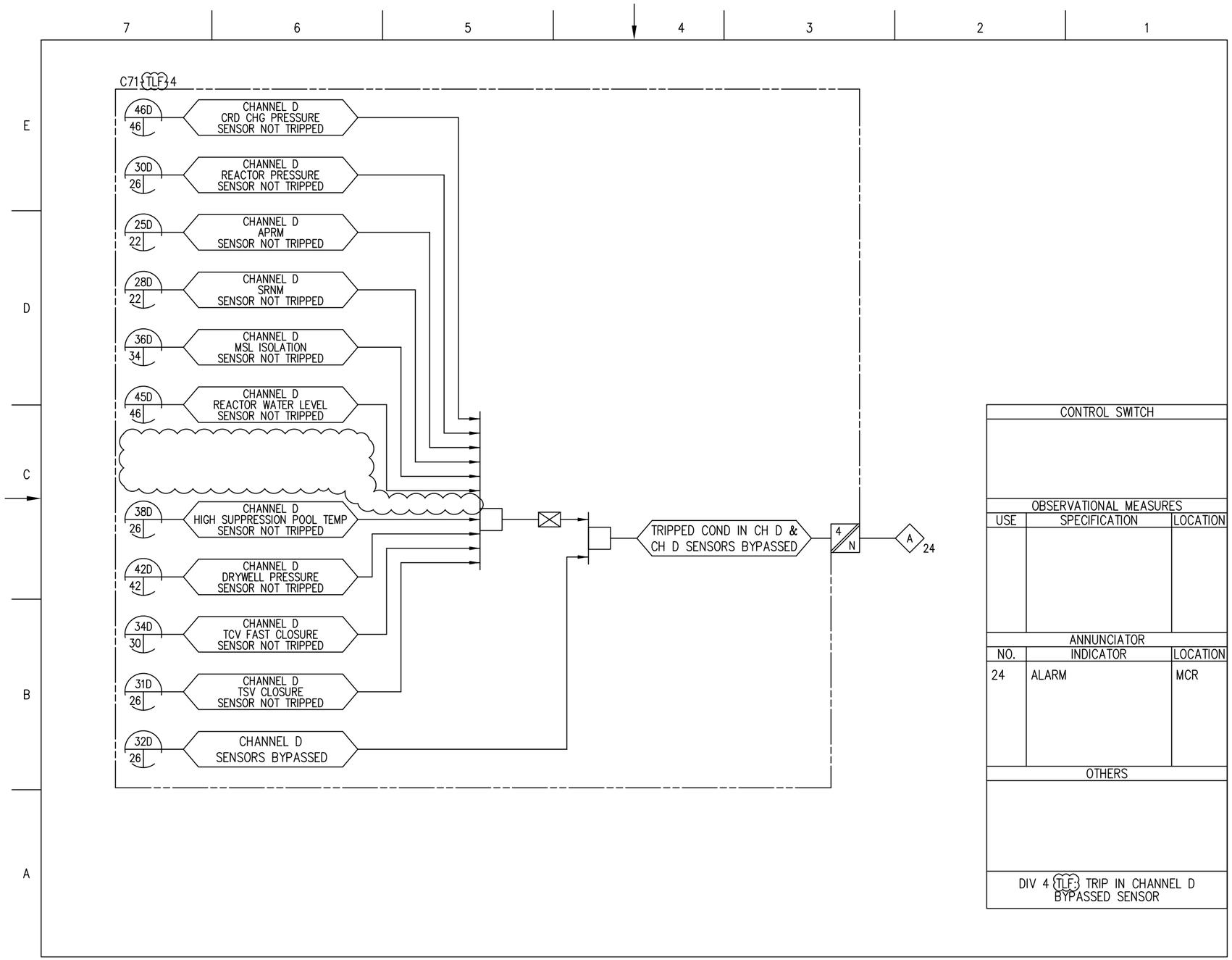

Figure 7.2-10 – Reactor Protection System IBD (Sheet 54 of 72)

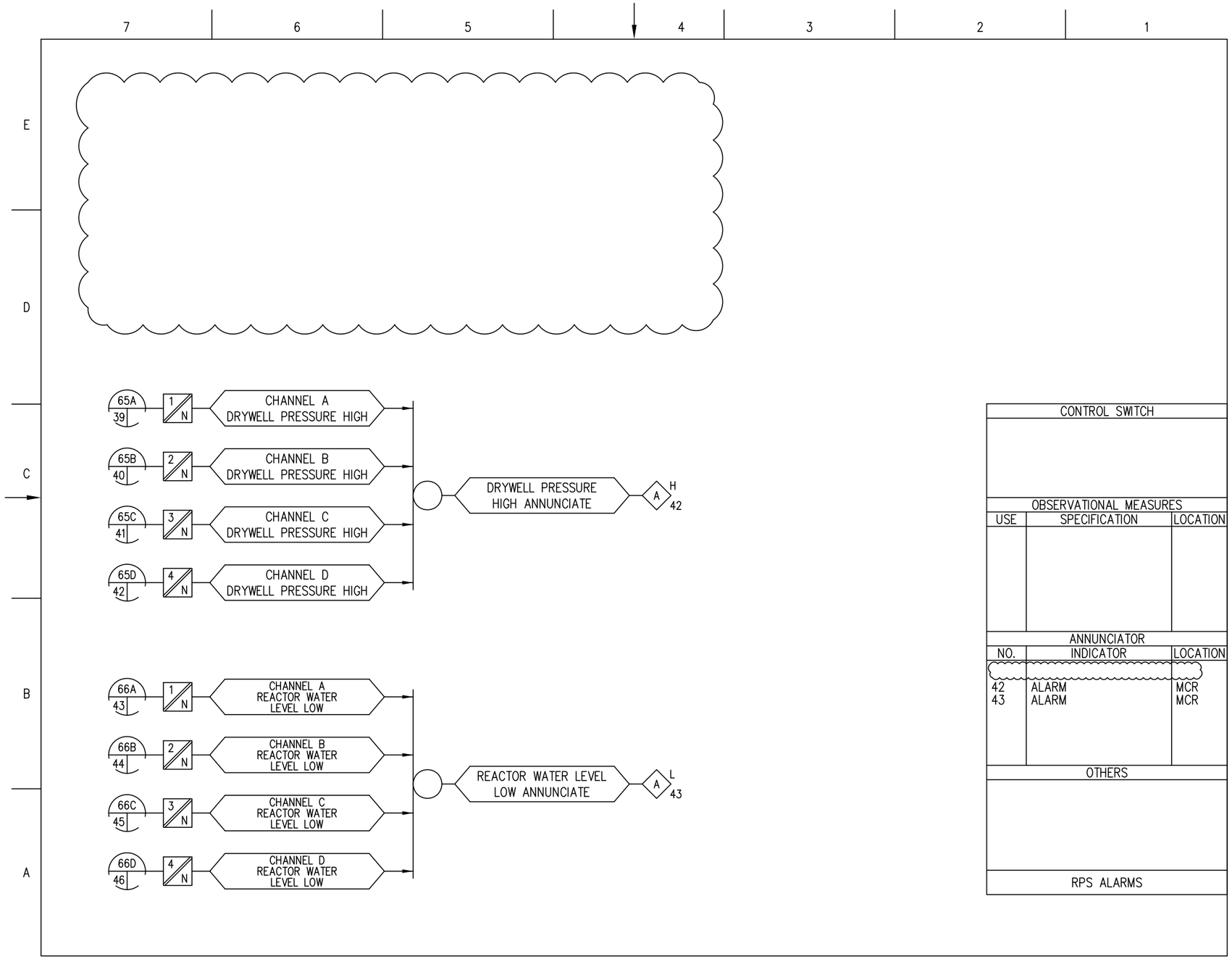

Figure 7.2-10 – Reactor Protection System IBD (Sheet 69 of 72)

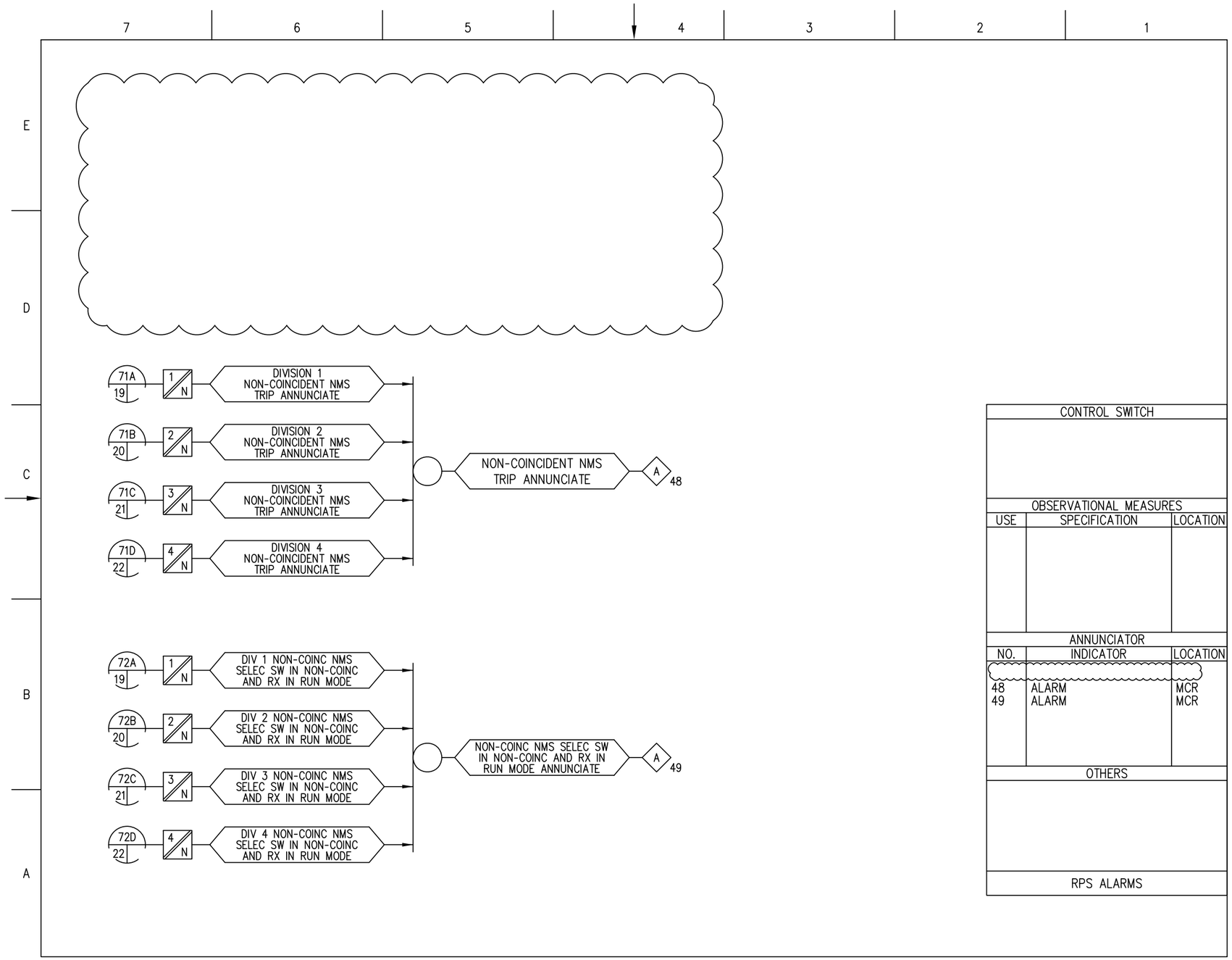

Figure 7.2-10 – Reactor Protection System IBD (Sheet 71 of 72)