10.3 Main Steam Supply System

The information in this subsection of the reference ABWR DCD, including all subsections, tables, and figures, is incorporated by reference with the following departures and supplements.

STP DEP 10.2-1 (Table 10.3-1, Figures 10.3-1 and 10.3-2)

STD DEP 10.3-1

STD DEP 10.4-1

STP DEP 10.4-3 (Figure 10.3-2)

STD DEP Admin

10.3.2.1 General Description

STD DEP Admin

The Main Steam Supply System is illustrated in Figure 10.3-1. The system design data is provided in Table 10.3-1. The main steam piping consists of four 700A pipe size diameter lines from the outboard MSIVs to the main turbine stop valves. The four main steamlines are connected to a header upstream of the turbine stop valves to permit testing of these valves *~~the MSIVs~~ during plant operation with a minimum load reduction. This header arrangement is also provided to ensure that the turbine bypass and other main steam supplies are connected to operating steamlines and not to idle lines. The main steam process downstream of the turbine stop valves is illustrated in Figure 10.3-2.*

STD DEP 10.3-1

~~A drain line is~~ Drain lines are *connected to the low points of each main steamline, both inside and outside the containment. Both sets of drains are headered and connected with isolation valves to allow drainage to the main condenser. To permit intermittent draining of the steamline low points at low loads, orificed lines are provided around the final valve to the main condenser. The steamline drains, ~~except~~* including the drains *through the Control Building, maintain a continuous downward slope ~~from the steam system low points to the orifice located near the condenser. The drain line from the orifice to the condenser also slopes downward~~* in the direction of flow to the steam system line drain low points in the Reactor Building steam tunnel and then slope upward to reach the high point in the steam tunnel above the Control Building. From this high point in the Control Building, the lines slope downward in the direction of flow to the Nuclear Island-Balance of Plant piping interface one meter outside of the Control Building. Although the drain lines flow upward for a portion of their travel, the differential pressure between the condenser and main steam lines, combined with the bypass and orifice isolation valves in the drain lines, which are controlled by reactor pressure and power, respectively, ensure complete drainage while preventing water hammer. *To permit emptying the drain lines for maintenance, drains are provided from the line low points going to the radwaste system.*

The drains from the steamlines inside containment are connected to the steamlines outside the containment to permit equalizing pressure across the MSIVs during startup and following a steamline isolation.

The Main Steam System contains the radioactive steam which passes the main steam isolation valves before they close to isolate the reactor under emergency conditions. This function of containing steam is done by the main steam piping, turbine bypass piping and steam drain piping discharging to the condenser.

The main steam piping and branch lines, 2-1/2 inches in diameter and larger, from (but not including) the outboard MSIVs to the turbine stop valves and to the turbine bypass valves are Quality Group B in accordance with the construction and quality requirements, ASME B&PV, Section III, Division 1, Subsection NC-Class 2, Nuclear Plant Components. The main steam lines from the seismic restraint on the outboard side of the outermost MSIVs, and all branch lines 2-l/2 inches in diameter and larger (including lines and valve supports), are designed by the use of an appropriate dynamic seismic system analysis, to withstand the safe shutdown earthquake (SSE) design loads for the ABWR standard plant in combination with other appropriate loads, within the limits specified for Class 2 pipe in Section III of the ASME B&PV Code. Lines smaller than 2-l/2 inches in diameter, the rupture of which could result in bypass of the main condenser, are designed to withstand the SSE design loads for the ABWR standard plant in combination with other appropriate loads. The mathematical model for the dynamic and seismic analyses of the main steam lines and branch line piping includes the turbine stop valves and piping to the turbine casing.

10.3.2.3 System Operation

STD DEP 10.4-1

Normal Operation — ~~*At low plant power levels, the Main Steam System may be used to supply steam to the turbine gland steam seal system. At high plant power levels, turbine gland sealing steam is normally supplied from the high pressure heater drain tank or related turbine extraction.*~~ During startup, the turbine gland seal steam system is supplied from the auxiliary boiler. At a sufficient pressure during reactor startup and up to rated power operation, seal steam is supplied by the gland steam evaporator. The source of heating steam for the evaporator is main steam or turbine extraction steam.

10.3.7 COL License Information

10.3.7.1 Procedures to Avoid Steam Hammer and Discharge Loads

The following site-specific supplement addresses COL License Information Item 10.4.

Operating and maintenance procedures that include precautions to avoid steam hammer and relief valve discharge loads are prepared in accordance with the Plant Operating Procedure Development Plan described in Subsection 13.5.3.1.These precautions include a sufficiently long main steamline warm-up period, including a turbine soaking period, during which the low point drain valves are opened to ensure that no condensed steam remains in the main steamlines when the drain valves are

closed. Additionally, maintenance procedures provide for the routine inspection of the low point drain collection pots to ensure that they are operating properly.

10.3.7.2 MSIV Leakage

The following standard supplement addresses COL License Information Item 10.5.

The MSIVs are designed to limit the leakage to less than 66.1 liters/min for all four lines, at a pressure corresponding to the calculated peak containment pressure for design basis accidents given in Table 6.2-1.

Table 10.3-1 Main Steam Supply System Design Data

Main Steam Piping	
Design flow rate at 6.79 MPaA and 0.4~~0~~% moisture, kg/h	~ ~~*7.71E+06*~~ **7.65E+06**

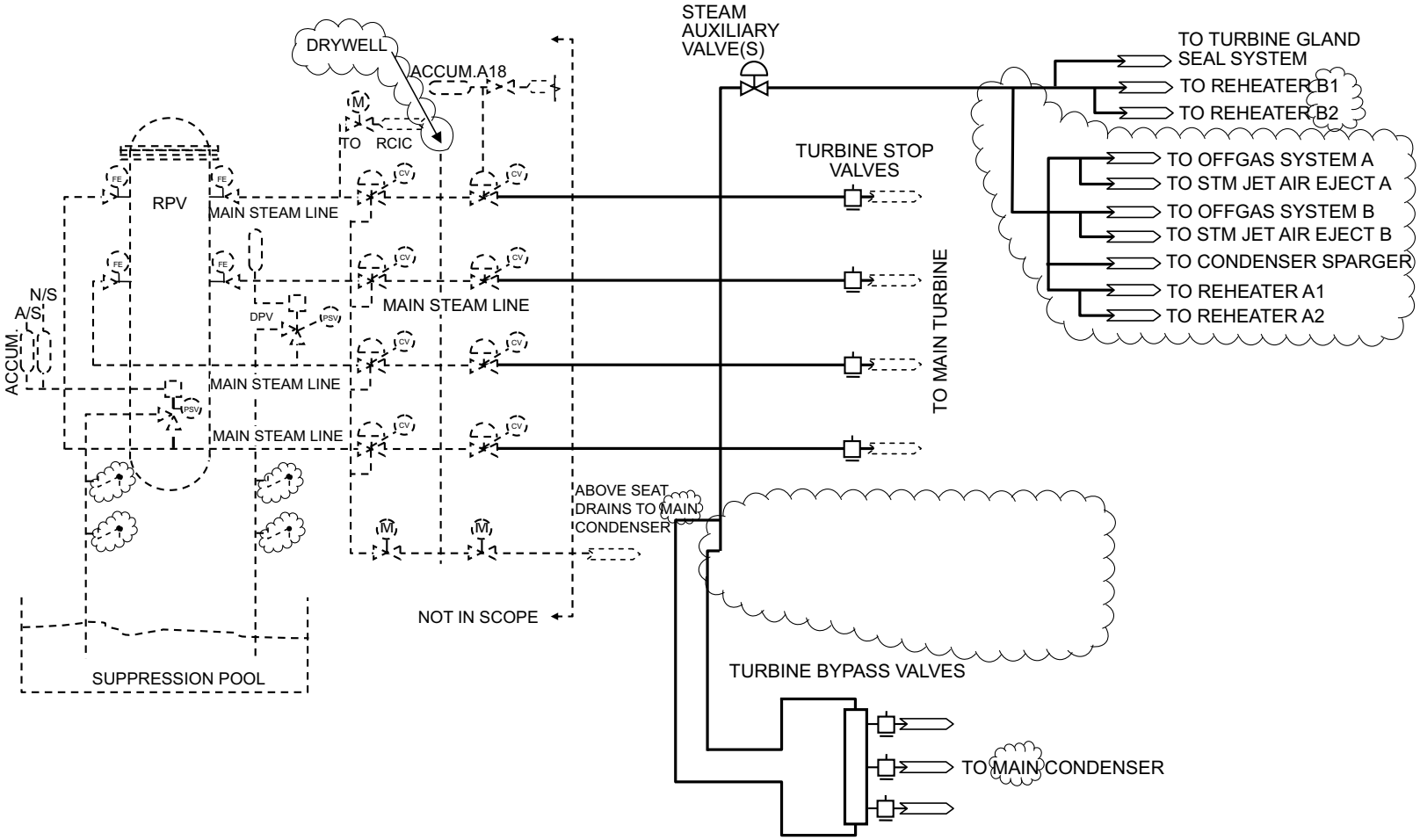

Figure 10.3-1 Main Steam Supply System

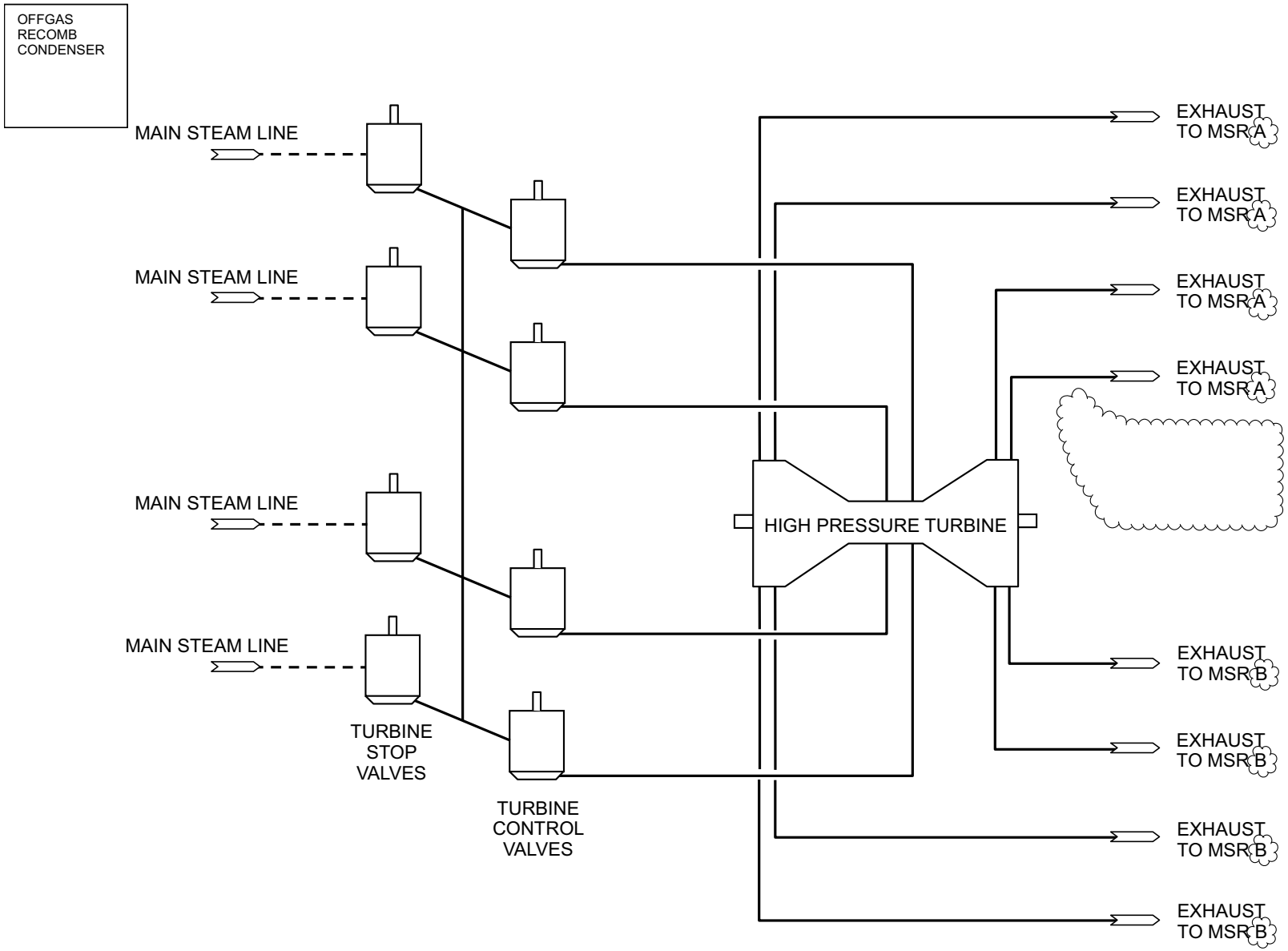

Figure 10.3-2 Main Steam Turbine System

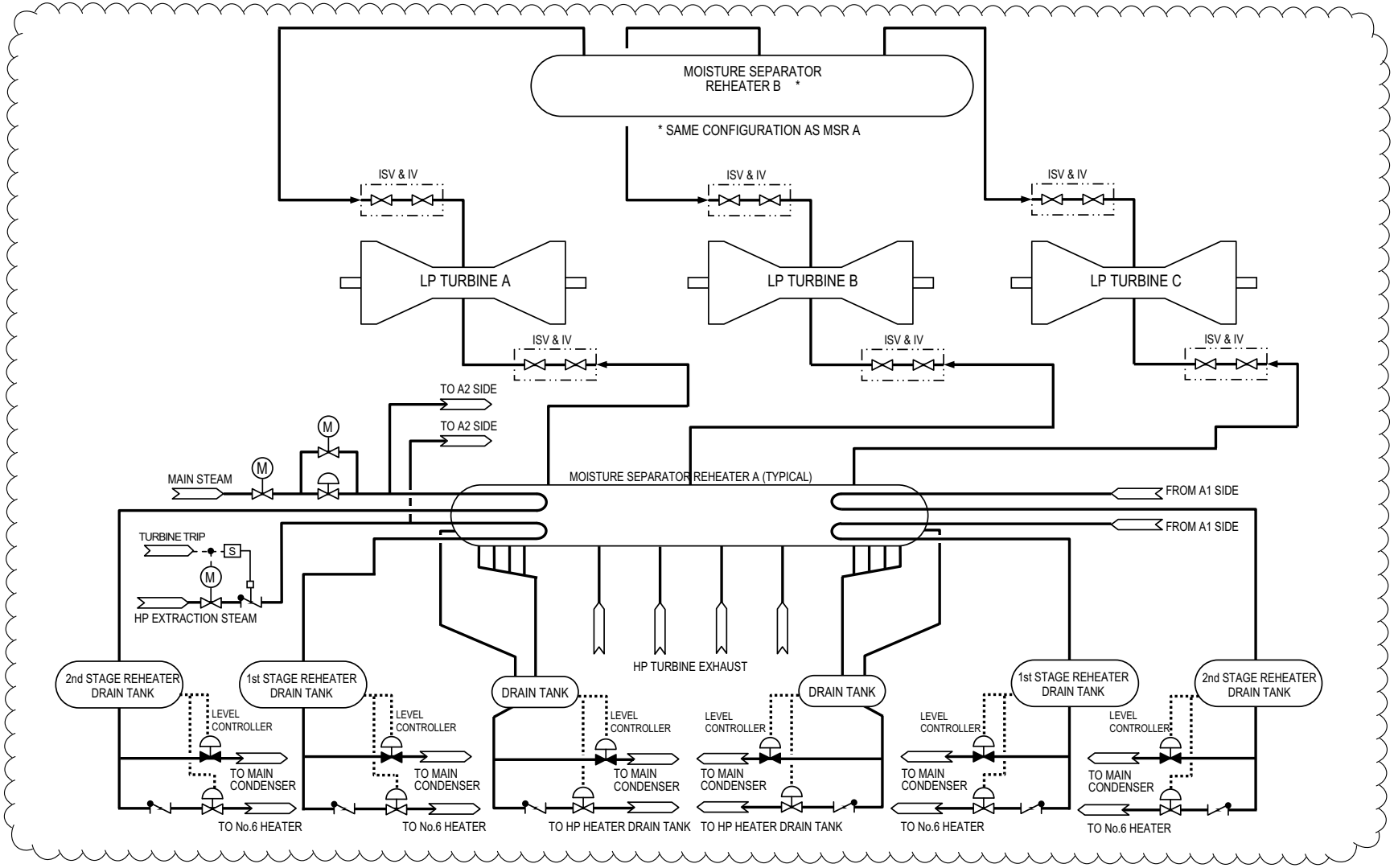

Figure 10.3-2 Main Steam Turbine System (Continued)