6C Containment Debris Protection for ECCS Strainers

The information in this appendix of the reference ABWR DCD is subject to several changes due to the adoption of a complex ECCS strainer design (e.g. Cassette Type Strainer). Consequently, for clarity it is presented in its entirety with the following departures incorporated. This strainer design has been used at numerous BWRs in Japan and numerous PWRs in the United States. The strainer is described in this appendix. Departure STD DEP Vendor changes General Electric (GE) to Toshiba in Section 6C.1.

STD DEP 6C-1 (Figure 6C-1, 6C-2, 6C-3, 6C-4, 6C-5)

STD DEP Vendor

The original DCD text is presented in *italics*, deletions are shown as ~~*strikethroughs*~~, and new text in underlined regular font.

6C.1 Background

*NRC Bulletin No. 93-02, Debris Plugging of Emergency Core Cooling Suction Strainers, (*Reference 6C-1*) NRC guidance and highlights the need to adequately accommodate debris in design by focusing on an incident at the Perry Nuclear Plant. ~~GE~~*Toshiba *reviewed the concerns addressed by NRC Bulletin 93-02*, including complying with Generic Letters GL 97-04 on NPSH requirements for ECCS pumps and GL 98-04 blockage from foreign materials and paint debris (References 6C-7 and 6C-8)*, and has reviewed the design of the ABWR for potential weaknesses in coping with the bulletin's concerns. ~~GE~~*Toshiba *has determined that the ABWR design is more resistant to these problems for a number of reasons as discussed in the following.*

The ultimate concern raised by the Perry incident was the deleterious effect of debris in the suppression pool and how it could impact the ability to draw water from the suppression pool during an accident. The ABWR design has committed to following the guidance provided in Regulatory Guide 1.82 (Reference 6C-2), Utility Resolution Guidance (URG) for ECCS Suction Strainer Blockage, NEDO-32686-A (Reference 6C-3) *and the additional guidance described below.*

The ABWR is designed to accommodate debris present in the suppression pool prior to Loss-of-Coolant Accident (LOCA) and *to inhibit debris generated during a LOCA from preventing operation of the Residual Heat Removal (RHR), Reactor Core Isolation Cooling (RCIC) and High Pressure Core Flooder (HPCF) system.*

6C.2 ABWR Mitigating Features

The ABWR has substantially reduced the amount of piping in the drywell relative to earlier designs and consequently the quantity of insulation required. Furthermore, there is no equipment in the wetwell spaces that requires insulation or other fibrous materials. The ABWR design conforms with the guidance provided by the NRC for maintaining the ability for long-term recirculation cooling of the reactor and containment following a LOCA.

The Perry incident was not the result of a LOCA but rather debris entering the Suppression Pool during normal operation. The arrangement of the drywell and wetwell/wetwell airspace on a Mark III containment (Perry) is significantly different from that utilized in the ABWR design. In the Mark III containment, the areas above the suppression pool water surface (wetwell airspace) are substantially covered by grating with significant quantities of equipment installed in these areas. Access to the wetwell airspace (containment) of a Mark III is allowed during power operations. In contrast, on the ABWR the only connections to the suppression pool are 10 drywell connecting vents (DCVs), and access to the wetwell or drywell during power operations is prohibited. The DCVs will have horizontal steel plates located above the openings that will prevent any material falling in the drywell from directly entering the vertical leg of the DCVs. This arrangement is similar to that used with the Mark II connecting vent pipes. Vertically oriented trash rack construction will be installed around the periphery of the horizontal steel plate to intercept debris. The trash rack design shall allow for adequate flow from the drywell to wetwell. In order for debris to enter the DCV it would have to travel horizontally through the trash rack prior to falling into the vertical leg of the connecting vents. Thus the ABWR is resistant to the transport of debris from the drywell to the wetwell.

In the Perry incident, the insulation material acted as sepia to filter suspended solids from the suppression pool water. The Mark I, II, and III containments have all used carbon steel in their suppression pool liners. This results in the buildup of corrosion products in the suppression pool, which settle out at the bottom of the pool until they are stirred up and resuspended in the water following some event (SRV lifting). In contrast, the ABWR liner of the suppression pool is fabricated from stainless steel which significantly lowers the amount of corrosion products which can accumulate at the bottom of the pool.

A further mitigating feature for the ABWR is that the insulation installed is reflective metal insulation type (RMI). Use of RMI minimizes the fibrous insulation source term used in the suction strainer design. This is a significant factor in design that reduces the potential suction strainer debris load and further reduces the potential for suction strainer blockage. In addition, inspections will ensure that there is no evidence of excessive build-up of debris around the ECCS suction strainers and any abnormalities that could affect the mechanical functioning of the suction strainers.

Since the debris in the Perry incident was created by roughing filters on the containment cooling units, a comparison of the key design features of the ABWR is necessary. In the Mark III design more than 1/2 of the containment cooling units are effectively located in the wetwell airspace. For the ABWR there are no cooling fan units in the wetwell air space. Furthermore the design of the ABWR Drywell Cooling Systems does not utilize roughing filters on the intake of the containment cooling units.

Temporary filters are used during post construction systems testing in accordance with plant housekeeping and foreign material exclusion procedures further reducing the potential for introducing debris to the suppression pool.

In the event that small quantities of debris enter the suppression pool, the Suppression Pool Cleanup System (SPCU) will remove the debris during normal operation. The SPCU is described in Section 9.5.9 and shown in Figure 9.5-1. The SPCU is designed to provide a continuous cleanup flow of 250 m^3/h. This flow rate is sufficiently large to effectively maintain the suppression pool water at the required ~~*purity*~~ cleanliness*. The SPCU system is intended for continuous operation and the suction pressure of the pump is monitored and provides an alarm on low pressure. Early indication of any deterioration of the suppression pool water quality will be provided if significant quantities of debris were to enter the suppression pool and cause the SPCU strainer to become plugged resulting in a low suction pressure alarm.*

The suction strainers design *at* Perry preceded and *did not meet the current regulatory requirements. The ABWR ECCS suction strainers will utilize* ~~*a "T" arrangement with conical strainers on the 2 free legs of the "T"*~~ a cassette type strainer design. ~~*This design separates the strainers so that it minimizes the potential for a contiguous mass to block the flow to an ECCS pump.*~~ The design of the strainers will be based on Regulatory Guide 1.82, NUREG/CR-6224 (Reference 6C-4), NUREG/CR-6808 (Reference 6C-5) and the Utility Resolution Guidance, NEDO-32686-A. The cassette type strainer design is based on a set of cassette modules with U-shaped filter pockets attached to the cylindrical outer jacket. Each strainer consists of filter modules, the outer jacket and flange plates on each end of the cylindrical assembly. The filter module is constructed with cassettes which are arranged axially along the strainer axis. One cassette consists of pocket shaped filters which are arranged radially. A cut-away drawing of the strainer is shown in Figure 6C-1. The material used in the cassette type strainer is stainless steel. The cylindrical strainer assemblies are mounted in pairs on piping tees at each ECCS pump suction line. When the ECCS pump operates, the suction flow in the suppression pool runs into all pockets through the outer jacket windows. Each pocket has five flow paths from the inlet through the five perforated walls to the outlet of the pocket towards the cassette strainer. By using the cassettes with the pocket shaped filters, the strainer has an available filter area which is larger per volume than cylindrical and other shaped strainers. The number of cassettes and pockets is adjusted to produce a specific head loss performance for the strainer. To avoid debris clogging the flow restrictions downstream of the strainers, the size of the holes in the perforated sheets is chosen by considering specific paths of ECCS equipment and piping (for example, the containment spray nozzle and the ECCS pump seal cooling flow orifices). The STP 3 & 4 strainers will have holes no larger than 2.1 mm.

A key feature in the design of these strainers is to collect debris where velocity is low, since the pressure drop across the debris bed is known to be proportional to the velocity through the bed. This minimizes head loss across the strainer. *The ABWR design also has additional features not utilized in earlier designs that could be used in the highly improbable event that all suppression pool suction strainers were to become plugged. The alternate AC (Alternating Current) independent water addition mode of RHR allows water from the Fire Protection System to be pumped to the vessel and sprayed in the wetwell and drywell from diverse water sources to maintain cooling of the fuel and containment. The wetwell can also be vented at low pressures to assist in cooling the containment.*

6C.3 RG 1.82 Improvement

All ECCS strainers will at a minimum be sized to conform with the guidance provided in Reg. Guide 1.82, for the most severe of all postulated breaks.

The following clarifying assumptions will also be applied and will take precedence:

(1) The debris generation model will utilize ~~right angle cones acting in both directions;~~ the Utility Resolution Guidance, NEDO-32686-A.

(2) The ~~amount of~~ design *insulation debris* load that is *generated ~~will be assumed to be 100% of the insulation in a distance of 3 L/D of the postulated break within the right angle cones including targeted insulation;~~* and transported to the suppression pool is based on the Utility Resolution Guidance, NEDO-32686-A.

(3) The strainer design is based on the Debris Load Fraction that accumulates on a given strainer for the LOCA case being considered. The debris load fraction is defined as the fraction of the total flow that is attributed to a given strainer.

(4) ~~All (100%) of the insulation debris generated will be assumed to be transported to the suppression pool.~~ Transportation of insulation debris to the suppression pool will be in accordance with NEDO-32686-A.

(5) The debris in the suppression pool will be assumed to remain suspended until it is captured on the surface of a strainer.

(6) In addition to the above, 1 cu. ft. of latent fiber is assumed to be suspended in the suppression pool and deposited on the surfaces of the operating strainers.

(7) STP 3&4 design specifications prohibit aluminum inside primary containment. Despite that prohibition, it is conservatively assumed that there is 4.5 sq. ft. of aluminum in the primary containment; however, this quantity of aluminum is not expected to form aluminum precipitates. Analysis has shown that, under conservative conditions, the maximum surface area of latent aluminum that could be present in the primary containment, corrode over the 30-day post-LOCA period and not precipitate out of the suppression pool solution is 4.5 sq. ft. The implementation of the STP 3&4 suppression pool cleanliness and FME programs will ensure that latent aluminum quantities would be less than this amount. Therefore, chemical precipitates due to presence of latent aluminum in primary containment will not be generated.

~~The sizing of the RHR suction strainers will assume that the insulation debris in the suppression pool is evenly distributed to the 3 pump suctions. The strainer size will be determined based on this amount of insulation debris and then increased by a factor~~

~~*of 3. The flow rate used for calculating the strainer size will be the runout system flow rate.*~~

Suction strainer sizing criteria is based on meeting NPSH requirements at run out system flow, and the design basis debris load including consideration of chemical effects, in the suppression pool that is considered to accumulate on the suction strainers after a number of pool volume turnovers.

The sizing of the RHR*, RCIC and HPCF suction strainers will conform to the guidance of Reg Guide 1.82 and* ~~*will assume*~~ assumes *that* all *the* ~~*insulation*~~ *debris in the suppression pool,* including insulation debris, corrosion sludge, dust and dirt, *is proportionally distributed to the pump suctions based on the flow rates of the systems at run out conditions* considering the most limiting system failures*. The strainers available for capturing insulation debris will include 2 RHR suction strainers and a single HPCF or RCIC suction strainer* in accordance with single failure criteria. The assessment of chemical effects will be in accordance with RG 1.82, and will include evaluation of the suppression pool post-LOCA chemistry, identification of potentially reactive material in the drywell, benchtop testing to identify types and amounts of chemical precipitates, and small-scale testing of strainer elements, if required. Downstream effects of material predicted to pass through the suction strainers will be evaluated in accordance with RG 1.82.

6C.3.1 Downstream and Chemical Effects Discussion

The ABWR design provides reasonable assurance that downstream effects as a result of debris bypassing the strainers will not have a deleterious effect on critical components such as fuel rods, valves and pumps downstream of the suction strainers. The basis of this assurance is provided in the following:

6C.3.1.1 Latent Debris Generation

Relative to the generation of latent debris, the ABWR contains a number of design features and controls which reduce the likelihood of such debris being generated as compared with operating BWR and PWR plants. Access to the containment during power operation is prohibited as the containment is inerted, thereby eliminating the likelihood of latent debris generation due to work being performed during power operation. In addition, in the unlikely event that latent debris exists in the suppression pool during power operation, the suppression pool cleanup (SPCU) system provides on-going cleanup. This system is run on an intermittent basis during power operation and provides an early indication of any deterioration of the suppression pool water quality. The suction pressure of the SPCU pump is monitored and provides an alarm on low pressure. During refueling outages, when latent debris could be generated by workers inside the containment, temporary filters are used during post-construction systems testing in accordance with plant housekeeping and foreign material exclusion procedures, further reducing the potential for introducing debris to the suppression pool. STP 3 & 4 has an operational program for suppression pool cleanliness, documented in accordance with Section 13.4S, which provides for periodic inspections of the suppression pool for cleanliness during outage periods. This operational program is described in Subsection 6.2.1.7.1. Maintenance procedures provide

procedure steps for removing, at periodic intervals, sediment and floating or sunk debris from the suppression pool that is not removed by the suppression pool cleanup system. Quarterly surveillance tests of Residual Heat Removal (RHR), High Pressure Core Flooder (HPCF), and Reactor Core Isolation Cooling (RCIC) systems provide further assurance that there is no blockage due to debris in the pump suction. Finally, the use of a stainless steel liner in the ABWR as opposed to carbon steel, which has been used in earlier version BWR suppression pools, significantly lowers the amount of corrosion products which can accumulate at the bottom of the suppression pool.

6C.3.1.2 LOCA-Generated Debris

Relative to the generation of debris from a postulated pipe break, the ABWR design contains a number of improvements from earlier BWR designs. The elimination of the recirculation piping removes a significant source of insulation debris from the containment and also reduces the likelihood of a large high energy pipe break which could lead to debris generation. For the STP 3 & 4 design, there is no fibrous insulation or calcium silicate on piping systems, including small bore piping, inside the containment. All thermal insulation material is a Reflective Metallic Insulation (RMI) design. RMI breaks up into shards too large to pass through the ECCS suction strainers which have a maximum 2.1 mm (1/12 inch) hole size. Furthermore, the use of fibrous and calcium silicate materials in the STP 3 & 4 Primary Containment is prohibited. With regard to LOCA-generated miscellaneous debris, the design of STP 3&4 minimizes the potential for such debris by specifying secure restraints, such as high tensile strength aircraft cable or specially designed bands, to secure equipment ID tags onto components located inside containment.

6C.3.1.3 Chemical Effects Debris

The STP 3 & 4 containment will not contain reactive materials such as aluminum, phosphates, or calcium silicate. In addition, the STP 3 & 4 Suppression Pool Cleanliness program (Subsection 6.2.1.7.1) ensures that quantities of latent debris, which might include aluminum or fiber, are kept to a minimum. A solubility calculation indicates that 4.5 square feet of latent aluminum would have to be present in the suppression pool to form aluminum precipitates under bounding conditions post-LOCA. Ensuring that there is less than 4.5 square feet of latent aluminum is within the capability of the containment cleanliness program.

Additionally, there is no exposed concrete inside the containment, i.e. it is covered by stainless steel or carbon steel, or qualified coatings. Even if the qualified coatings were to fail, there are no phosphates in the suppression pool water to form calcium precipitates.

Finally, since there is no exposed concrete there is no potential to form silicon precipitates. Similarly, even if the qualified coatings were to fail, there is no sodium in the suppression pool water to form sodium silicate precipitates.

6C.3.1.4 Debris Transport

The ABWR contains design features which reduce the transport of accident-generated debris to the suction strainers. The wetwell, which is the chamber in direct contact with the suppression pool, is largely empty with the only significant components/structures being an access tunnel, a grated catwalk and the Safety Relief Valve (SRV) discharge piping. There are no normal operating high energy piping systems in the wetwell which could break and lead to debris generation. The high energy piping in the ABWR, which consists largely of the main steam, Reactor Water Cleanup (RWCU) system, and feedwater piping under normal operating conditions, is located in the upper drywell area. Any debris which is generated by a break in these systems would need to pass through a circuitous route involving any one of the ten drywell connecting vents (DCVs) and then through any one of the thirty horizontal vents before reaching the suppression pool. The DCVs have horizontal steel plates located above the openings that prevent any material falling in the drywell from directly entering the vertical leg of the DCVs. A vertically oriented trash rack is installed around the periphery of the horizontal steel plate to intercept debris. In order for debris to enter the DCV, it would have to travel horizontally through the trash rack prior to falling into the vertical leg of the connecting vents. Thus, the ABWR is resistant to the transport of debris from the drywell to the wetwell.

6C.3.1.5 Suction Strainer Design

In addition to these mitigating features, the downstream effects are reduced by the suction strainers themselves. The strainers are designed to protect the ECCS pumps to allow them to function long-term after an accident. As a result, they are designed so that 100% of the ECCS flow is routed through them and filtered such that particles 2.1 mm or larger are captured by the strainer. STP 3 & 4 conforms to Revision 3 of Regulatory Guide 1.82.

6C.3.1.6 Diversity of ECCS Delivery Locations to the Core

The ABWR has diversification of ECCS delivery points which helps to reduce the consequences of downstream blockage. Should any blockage occur in the lower core region, such as the fuel filter, which could limit the effectiveness of systems like RHR, the HPCF will still be effective at providing cooling water because it delivers water through spargers located above the core.

6C.3.1.7 Related Tests

Regarding acceptance criteria for blockage of small clearances, it is noted that there should be no fiber downstream of the STP 3 & 4 suction strainers because the only fiber potentially inside primary containment (latent loose debris) will not be degraded during the pipe break and will not be small enough to pass through the 2.1 mm diameter holes in the CCI cassette-type suction strainers. Preliminary data from testing conducted by Westinghouse (WEC) to resolve GSI-191 has not identified any coagulation of particulate debris until after fiber is introduced to the flow stream. Therefore, blockage of small clearances in downstream components is not likely for the STP 3 & 4 downstream components. The analysis of the effects of debris on downstream components such as pumps, valves and heat exchangers in PWRs was

documented in WCAP-16406, which was approved by the NRC. It is expected that the analysis results which showed acceptable performance of these components will apply to BWRs due to similarity in materials and clearances to the PWR components.

6C.3.1.8 Downstream Fuel Effects Test

For the initial fuel cycle, a downstream effects test is performed to ensure that debris bypassing the suction strainers does not impair the flow to the core. The following discusses the test plan, the analysis basis, and the debris assumptions used in this test.

6C.3.1.8.1 Test Plan

A test facility is comprised of a fuel assembly mock-up, a pump, associated recirculation piping, and a mixing tank to add the debris. The test is conducted with a single fuel assembly, including a fuel debris filter, a fuel inlet nozzle, and fuel spacer grids. The cross-section of the fuel is modeled exactly; the length of the fuel assembly is reduced. The fuel assembly is unheated.

The test initial conditions are at a flow rate of 3.326 kg/second, and at atmospheric pressure and ambient temperature. The flow rate is representative of the flow at recirculation conditions. The atmospheric pressure and ambient temperature result in a viscosity that is conservative with respect to pressure drop due to debris blockage. The test is initiated at clean conditions to establish a flow representative of post-LOCA recirculation conditions. The flow is injected at the fuel assembly inlet. Once a steady state has been established, the debris (described in 6C.3.1.8.3) is added to the system. The fibrous debris is added first. The fiber is added slowly and in small amounts. Once all the fibrous debris has been added, the remainder of the debris is added. The particulate debris is added in such a way that it does not coagulate. The pressure drop across the inlet and the entire fuel assembly is monitored. In addition, the flow rate and coolant temperature is monitored. The test is run until all debris has been deposited in the system and or a steady state pressure drop condition has been achieved.

6C.3.1.8.2 Analysis

6C.3.1.8.2.1 Introduction

An analysis determines the acceptable level of blockage in the fuel by LOCA generated debris which bypasses the ECCS suction strainer. This analysis ensures that the long term core cooling per Criterion 5 of 10CFR50.46 is maintained, the calculated core temperature is maintained at an acceptably low value, and decay heat is removed for an extended period of time required by the long-lived radioactivity remaining in the core. Potential deposition of particulate debris on the fuel and its impact on the heat transfer from the cladding is also included in the evaluation.

The results of the analysis are used to determine the acceptance criteria for the downstream fuel effects test, to be performed at least 18 months prior to initial fuel load.

6C.3.1.8.2.2 Analysis Approach

Although the diversification of ECCS delivery points (injection from the top of the core by the High Pressure Core Flooders and injection from below the core by the Low Pressure Core Flooder and Reactor Core Isolation Cooling) helps reduce the consequences of a blockage in the fuel assembly, for this analysis it is assumed that all the debris is injected from the bottom of the core and therefore, is exposed to the fuel debris filter, which is the most likely place for blockage to occur.

The analysis is performed for a feedwater line break for the following reasons. Following the break and after the blowdown is complete, the water level in the downcomer rises to the feedwater line (i.e. the break elevation). At that point, all the excess flow from the Low Pressure Core Flooder (LPCF) or Reactor Core Isolation Cooling (RCIC), not injected into the core will flow out through the break. The flow rate into the core is dependent upon the natural circulation head of colder water in the downcomer and the hotter water and two-phase mixture in the core region. As the core inlet begins to block, the core flow rate decreases. A steam line break, being at a higher elevation, will produce a higher natural circulation flow and therefore is less limiting than a feedwater line break for establishing the pressure drop limit at the fuel inlet.

For this analysis, the flow area at the fuel inlet is reduced to simulate blockage of the debris filter. All bypass flow paths, except for the inter-assembly bypass holes located in the bottom transition piece, are also assumed to be blocked. The bypass in the bottom nozzle is not likely to be blocked due the large opening size (10.3 mm diameter) which is significantly greater than the strainer hole size (2.1 mm). The reduced flow area at the core inlet decreases the core inlet flow rate and increases the core inlet differential pressure (DP). The minimum flow area is determined to ensure that no point in the core experiences significant cladding heat-up, measured by ensuring that the void fraction remains < 0.95. The corresponding DP at the core inlet, corrected for the changes in the core flow rate, is the parameter monitored and used as the acceptance criterion in the test.

Conservative values of the nodal power peaking and pin-to-pin peaking factors for the hot assembly are chosen to place the hot rod at the Thermal Mechanical Operating Limit (TMOL). A core power corresponding to a decay heat at 5 minutes after shutdown is assumed as the debris accumulates at the debris filter and reduces the inlet flow area. This core power corresponding to decay heat at 5 minutes is conservatively kept constant thereafter. For the reasons stated below, blockage sufficient to reduce core cooling within 5 minutes is not likely:

- The core and the upper plenum retain significant inventory during the blowdown. The void fraction in the upper plenum remains below 1.0 (Figure 4-25). Therefore, additional water injected into the core before a quasi-steady state is established is minimal (i.e., the level in the downcomer increases to the FW line). After the quasi-steady state is achieved, the injection into the core is limited by the natural circulation head and core boil off.

- The debris laden flow from the suppression pool will be injected into the vessel only after the initial inventory of the ECCS piping, which is clean, is swept and injected into the vessel. Therefore, any suppression pool water will be further diluted by this clean initial injection.

- Although not credited in this analysis, the HPCF pumps (and RCIC) initially inject from the condensate storage tank (CST), which is a clean source of water. The LPCF pumps do not start injection until well after 2 minutes.

In addition, a parametric study is performed to determine the effect of fouling caused by deposition of particulate debris on the cladding. The level of initial fouling on the cladding is increased to represent the effect of uniform deposition of particulate debris on the cladding.

6C.3.1.8.2.3 Analysis Results

Figures 6C-2, 6C-3, and 6C-4 compare the core inlet DP, flow rate and void fractions for the cases with no blockage and with blockage resulting in a reduction of flow area by 90% of inlet flow area. Five minutes is the estimated amount of time required for debris in the containment to start to reach the fuel filters. The models assume clogging begins at 850 seconds because that is when the flow through the core reaches steady state. In order to ensure any effects seen are covered by the changes being made, steady state flow is required. Despite a very high level of blockage, sufficient flow remains available to the core to ensure that the core void fraction both in the hot assembly and average assembly remain < 0.95.

In the ABWR design, the peak cladding temperature (PCT) occurs very early in the transient during the Reactor Internal Pumps (RIPs) coastdown phase, before ECCS injection occurs. Therefore, the PCT remains unaffected during the RIP coastdown by the subsequent blockage at the fuel inlet because the cladding temperature is maintained low (near the saturation temperature) as the core void fraction, both in the hot and average assemblies, is maintained below < 0.95. Figure 6C-4 provides a comparison of cladding temperature for the blocked and unblocked cases. The low fuel clad temperature also ensures that cladding oxidation does not occur in the long term cooling phase of the accident.

The impact on the clad temperature of fouling caused by an assumed deposition of particulate debris on the cladding is small. The increase in PCT from low fouling to high fouling is only approximately 30 deg F.

The results of the analysis provide an acceptable core inlet differential pressure (DP), corrected for the flow rates to account for the fact that the flow rate will decrease differently in the test loop (supplied by a pump) vs. in the analysis (controlled by natural circulation head).

$$\left[\frac{\Delta p_f}{\Delta p_i}\right]_{Test-Measured} = \left[\frac{\Delta p_f}{\Delta p_i}\right]_{LOCA-Aly} * \left(\frac{w_i}{w_f}\right)^2_{Aly} \left(\frac{w_f}{w_i}\right)^2_{Test}$$

Where subscript "i" denotes initial (i.e., unfouled conditions), "f" indicates fouled conditions, "Aly" refers to analysis and "W" is the flow rate into the assembly.

6C.3.1.8.3 Debris Assumptions for Downstream Test

The test is conducted using conservative assumptions regarding the debris that would be present in the suppression pool following a LOCA. The following debris types are included: (1) Coatings, (2) Sludge, (3) Dust/Dirt, (4) Rust Flakes, (5) RMI shards, and (6) Latent Fiber. No chemical debris is included since there are no credible sources of chemical debris in STP 3 & 4. The first four debris types are conservatively assumed to be particles smaller than 2.1 mm and are therefore all assumed to pass through the ECCS strainers. For the RMI shards and latent fiber, an assessment of the amount of the debris passing through the strainer is performed. Latent fiber debris upstream of the strainers is assumed to be 1 ft^3 (6C.3 item (6)). The fraction of latent fiber assumed to be small enough to pass through the strainers is 10% based on conservatively assuming the fraction of bypass is 10 times the amount of destroyed fibrous insulation fibers (which are not credible in the ABWR) that bypassed CCI cassette-type strainers during testing for GSI-191 plants. Based on the size distribution of stainless steel RMI destroyed during jet testing (and shown in Figure 3-7 of NUREG/CR-6808), 2% of the RMI within the break zone of influence is assumed to be shards smaller than 2.1 mm, and therefore small enough to pass through the strainers.

Since there are 872 fuel assemblies in the STP 3 & 4 core, the above debris amounts are reduced by a factor of 1/872. To account for the possibility of non-uniform debris deposition, a 10 % penalty is assumed. The debris amounts that are used in the test are shown below:

Debris Type	Debris Assumed in Downstream Fuel Effects Test
Coatings	0.107 lbs.
Sludge	0.246 lbs
Dust/Dirt	0.189 lbs.
Rust Flakes	0.063 lbs.
Stainless RMI Shards	78.211 in^2
Latent Fiber	0.218 in^3

6C.3.1.9 Summary

In summary, there is reasonable assurance that the downstream effects of material passing through the suction strainers will not adversely affect the fuel or other components. This conclusion is based upon the low potential for generating debris in the ABWR, the tortuous path for any debris to enter the wetwell from the drywell, the cleanup provisions for the water in the wetwell, the low potential for chemical debris, the small size of the holes in the suction strainers that filter out most debris, quarterly/periodic surveillance of HPCF, RHR, and RCIC systems which provides further assurance of the absence of debris which could affect their readiness for water injection capability, diversity of injection points for ECCS into the core, and preliminary data from PWR test results which show little impact on head loss in the fuel region from particulate only debris.

A test will be performed on the fuel to be used in the initial fuel cycle to confirm that debris will not adversely affect the fuel.

6C.3.2 Evaluation of Downstream Effects on Major Components

The effects of debris passing through the STP 3&4 strainers on downstream components such as pumps, valves, and heat exchangers will be evaluated using the methodology described in WCAP-16406-P "Evaluation of Downstream Sump Debris Effects in Support of GSI-191" along with the accompanying NRC Safety Evaluation. The WCAP includes equations for determining wear on surfaces exposed to the fluid stream due to various types of debris; e.g., paint chips or RMI shards. Methodologies for evaluating the potential for blockage of small clearances due to downstream debris are also included in the WCAP. The WCAP also identifies the acceptance criteria for these downstream components. The materials and clearances for the valves, pumps, and heat exchangers downstream of the ABWR ECCS suction strainers are essentially the same as the materials and clearances for the valves, pumps, and heat exchangers downstream of the PWR containment sump suction strainers. Therefore, the application of the WCAP methodology for the ABWR is appropriate.

The evaluation of the effects of bypassed debris on downstream components will be submitted as part of the overall downstream effects evaluation, which will be provided to the NRC at least 18 months prior to fuel load (COM 6C-1).

6C.4 Discussion Summary

In summary, the ABWR design includes the necessary provisions to prevent deleterious debris from entering the ECCS and impairing the ability of the RCIC, HPCF, and RHR systems to perform their required post-accident functions. Specifically, the ABWR does the following:

(1) The design is resistant to the transport of debris to the suppression pool.

(2) The suppression pool liner is stainless steel, which significantly reduces corrosion products.

(3) *The SPCU system will provide early indication of any potential problem.* Low SPCU pump suction pressure can provide early indication of debris present in the suppression pool and permit the plant operator to take appropriate corrective action.

(4) *The SPCU System operation will maintain suppression pool cleanliness.* Plant housekeeping and Foreign Material Exclusion (FME) procedures assure pool cleanliness prior to plant operation and over plant life such that no significant debris is present in the suppression pool.

(5) Visual inspection of the suction strainers is performed each refueling outage.

(6) ~~*(5)*~~ *The equipment installed in the drywell and wetwell minimize the potential for generation of debris.*

(7) ~~*The ECCS suction strainers*~~The complex ECCS strainers *meet the current regulatory requirements unlike the strainers at the incident plants.*

~~*(7) The RHR suction strainers will apply an additional factor of 3 design margins.*~~

6C.5 Strainer Sizing Analysis Summary

~~*A preliminary analysis was performed to assure*~~ The strainer sizing analysis assures *that the above requirements* ~~*could be*~~ are *satisfied using strainers compatible with the suppression pool design as shown by Figure 1.2-13i. The following summarizes* ~~*the results, which indicate strainer sizes that are acceptable within the suppression pool design constraints.*~~the strainer sizing analysis.

Each loop of an ECCS system has a single suppression pool suction strainer configured in a T shape with a screen region at the two ends of the T cross member. Analysis determined the area of each screen region. Thus, RHR with three loops has six screen regions. The HPCF with two loops has four screen regions, and the RCIC has two screen regions. ~~*The characteristic dimension given for the screens in the results below indicates a surface area consisting of a circle with a diameter of the dimension plus a cylinder with a diameter and length of the dimension.*~~The characteristic dimensions to calculate a surface area for cassette type strainer are given as follows.

(1) Depth of filter pocket

(2) Width of filter pocket

(3) Length of strainer

(4) Diameter of strainer

By the requirements above, all of the debris deposits on the strainers. The distribution of debris volume to the strainer regions was determined as a fraction of the loop flow splits based on runout flow. Debris on the screen creates a pressure drop as predicted by ~~*NUREG-0897*~~NUREG/CR-6224 and NUREG/CR-6808, *which is*

referenced by R.G. 1.82. ~~The equation for NUKONTM insulation on page 3-59 of NUREG-0897 was used for this analysis. The NUKONTM debris created pressure drop equation is a function of the thickness of debris on the screen (which is a function of debris volume), the velocity of fluid passing through the screen (runout flow used), and the screen area.~~ Pressure drop caused by the mixed particulates and fiber bed is calculated by the equation shown on NUREG/CR-6224, Appendix B. The following parameters play an important part in the function of this equation for pressure drop caused by mixed bed.

(1) Thickness of debris on screen

(2) Characteristic shape of debris type

(3) Rate of particulate mass to fiber debris mass

(4) Velocity of fluid passing through the screen (runout flow used)

On the one hand, pressure drop is calculated by the equation shown on NUREG/CR-6808 for RMI. *The debris created pressure drop was applied in an equation as follows; the static head at the pump inlet is equal to the hydraulic losses through the pipe and fittings, plus the pressure drop through the debris on the strainers, plus the hydraulic loss through the unplugged strainer, ~~plus a margin equal to approximately 10% of the static head at the pump inlet,~~ and plus the required NPSH. The static head takes into account the suppression pool water level determined by the draw down calculated as applicable for a main steam line break scenario. ~~A summary provided in Table 6C-1, and a summary of the analysis results is provided in Table 6C-2.~~*

By making realistic assumptions, the following additional conservatisms are likely to occur, but they were not applied in the analysis. No credit in water inventory was taken for water additions from feedwater flow or flow from the condensate storage tank as injected by RCIC or HPCF. Also, for the long term cooling condition, when suppression pool cooling is used instead of the low pressure flooder mode (LPFL), the RHR flow rate decreases from runout (1130 m^3/h) to rated flow (954 m^3/h), which reduces the pressure drop across the debris.

In summary, the analytical process for sizing of the strainers is based on debris generation, debris transport and a head loss evaluation in accordance with the Utility Resolution Guidance, NEDO-32686-A supplemented by an assumption of latent fiber. This analytical method will be used to implement the ITAAC as shown in Tier 1, ITAAC 2.4.1.4.c, 2.4.2.3.g, and 2.4.4.3.j.

6C.5.1 ECCS Suction Strainer Sizing Design Basis

The ECCS suction strainer design to be used on STP 3&4, which is described in Appendix 6C.2 and its associated references, is the same as the design for the Reference Japanese ABWR (see References 6C-11, 6C-12 and 6C-13), and the STP 3 & 4 strainers will have at least the same area as the Reference Japanese ABWR strainers. Application of the Reference Japanese ABWR ECCS suction strainer design to STP 3 & 4 is conservative for the following reasons:

- The sizing of the Reference Japanese ABWR strainers is based on the methodology defined in the BWROG's Utility Resolution Guideline (URG) (Reference 6C-3).

- The Reference Japanese ABWR primary containment includes fibrous and calcium silicate thermal insulation, both of which are significant contributors to strainer head loss. For STP 3&4, the only type of thermal insulation allowed inside the primary containment is all stainless steel reflective metal insulation (RMI), which results in a much lower head loss across the ECCS suction strainers.

The application of the reference Japanese ABWR strainer head loss analysis to STP 3&4 is less conservative in one area. Section 6C.3 and Regulatory Guide 1.82, Rev. 3 state that the head loss calculations are to be performed at pump runout flow rate conditions. For the reference Japanese ABWR, these calculations were performed at design flow rate conditions. Because pump runout flow rate is greater than design flow rate and strainer head loss is proportional to flow rate, a higher suction strainer head loss is calculated at runout flow rate. However this higher head loss is more than compensated by other changes made by STP 3&4 compared with the reference Japanese ABWR, including the removal of fibrous and calcium silicate insulation materials from the containment. Consequently, the use of the reference Japanese ABWR for the licensing basis for STP 3&4 is conservative. This evaluation is documented in Reference 6C-13.

The expected cleanliness of the ABWR primary containment is supported by operating experience from one of the oldest Japanese ABWRs. Specifically, an inspection at this plant recovered items from the suppression pool, including tape fragments, plastic sheet fragments, and short segments of rope. None of these types of items were reported in the drywell as a result of that inspection, and no such items were reported in either the drywell or suppression pool during the previous inspection 2 years earlier. To account for the potential that there might be a few similar items inadvertently left in the primary containment during the life of the plant, it is assumed that 2 filter pockets on each ECCS strainer are completely blocked by miscellaneous latent debris.

6C.6 References

6C-1 Debris Plugging of Emergency Core Cooling Suction Strainers, NRC Bulletin No. 93-02, May 11, 1993.

6C-2 Water Sources for Long-Term Recirculation Cooling Following a Loss-of-Coolant Accident, NRC Reg. Guide 1.82.

6C-3 Utility Resolution Guidance for ECCS Suction Strainer Blockage, NEDO-32686-A.

6C-4 Parametric Study of Potential for BWR ECCS strainer Blockage Due to LOCA Generated Debris, NUREG/CR-6224.

6C-5 Knowledge Base for Effect of debris on Pressurised Water Reacter Emergency Core Cooling Sump Performance, NUREG/CR-6808

6C-6 NOT USED

6C-7 NRC Generic Letter (GL) 97-04, Assurance of Sufficient Net Positive Suction Head for Emergency Core Cooling and Containment Heat Removal Pumps, dated October 7, 1997

6C-8 NRC Generic Letter (GL) 98-04, Potential for Degradation of the Emergency Core Cooling System and the Containment Spray System After a Loss-Of-Coolant Accident because of Construction and Protective Coating Deficiencies and Foreign Material in Containment, dated July 14, 1998.

6C-9 Not Used.

6C-10 Not Used.

6C-11 The Evaluation Report for Net Positive Suction Head of Pump in Emergency Core Cooling System, STP Doc. U7-RHR-M-RPT-DESN-0001, Rev. A, May 27, 2009.

6C-12 The Supplementary Document for the Head Loss Evaluation Report of Japanese ABWR ECCS Suction Strainer, STP Doc. U7-RHR-M-RPT-DESN-0002, Rev. B, October 20, 2009.

6C-13 The Evaluation Example of the Head Loss of the ECCS Suction Strainer and Pipe in the ECCS Pump Run-out Flow condition, STP Doc. U7-RHR-M-RPT-DESN-0003, Rev. A, May 27, 2009.

~~Table 6C-1 Debris Analysis Input Parameters~~Not Used

~~Estimated debris created by a main steam line break~~	~~2.6 m^3~~
~~RHR runout flow (Figure 5.4-11, note 13)~~	~~1130 m^3/h~~
~~HPCF runout flow (Table 6.3-8)~~	~~890 m^3/h~~
~~RCIC controlled constant flow (Table 5.4-2)~~	~~182 m^3/h~~
~~Debris on RHR screen region, 3 RHR loops operating~~	~~0.434 m^3~~
~~Debris on HPCF screen region~~	~~0.369 m^3~~
~~Debris on RCIC screen region~~	~~0.097 m^3~~
~~RHR required NPSH (Table 6.3-9)~~	~~2.4 m~~
~~HPCF required NPSH (Table 6.3-8)~~	~~2.2 m~~
~~RCIC required NPSH (Table 5.4-2)~~	~~7.3 m~~
~~RHR pipe, fittings and unplugged strainer losses1~~	~~0.60 m~~
~~HPCF pipe, fittings and unplugged strainer losses*~~	~~0.51 m~~
~~RCIC pipe, fittings and unplugged strainer losses*~~	~~0.39 m~~
~~Suppression pool static head above pump suction~~	~~5.05 m~~

~~*] Calculated hydraulic losses*~~

~~Table 6C-2 Results of Analysis~~Not Used

~~RHR screen region area/characteristic dimension~~	~~5.66 m^2/1.20 m~~
~~HPCF screen region area/characteristic dimension~~	~~1.46 m^2/0.61 m~~
~~RCIC screen region area/characteristic dimension~~	~~0.27 m^2/0.26 m~~
~~Total ECCS screen region area~~	~~40.0 m^2~~

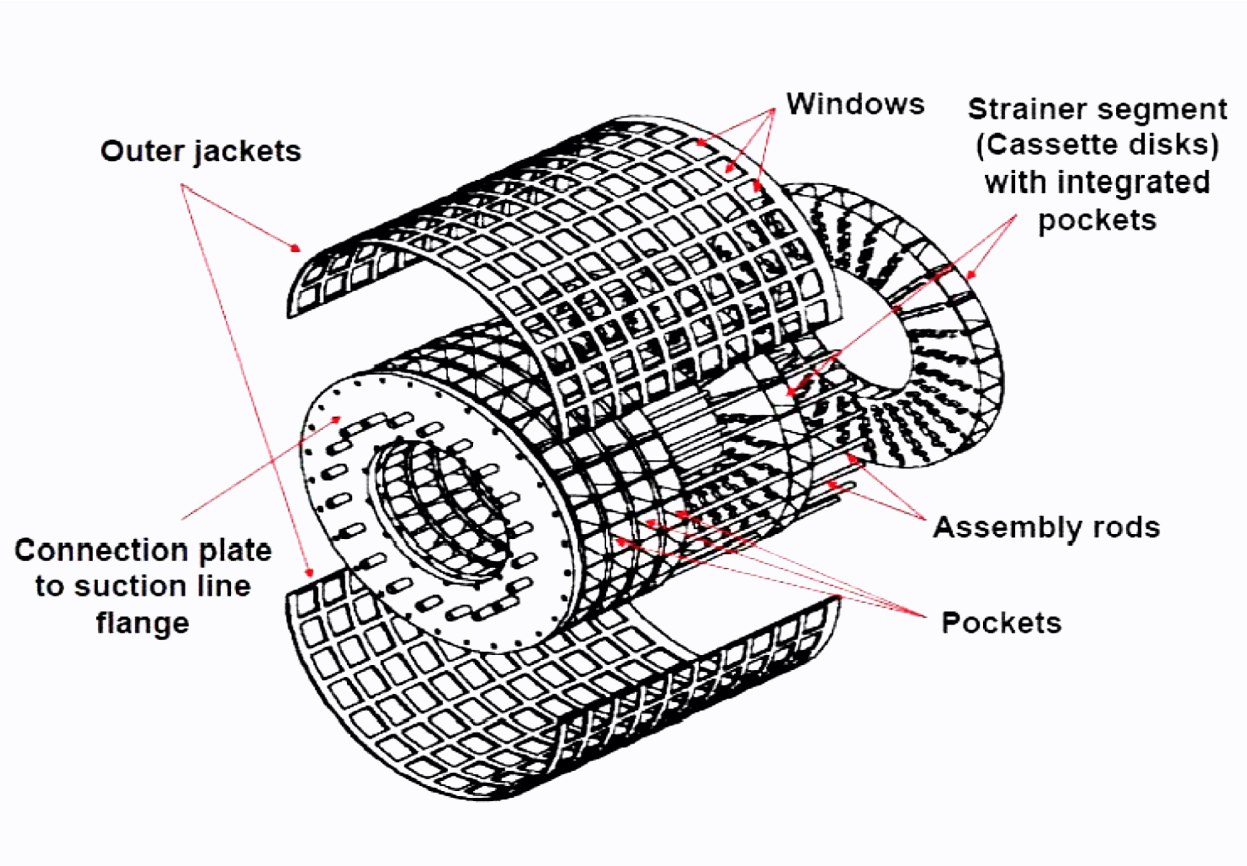

Figure 6C-1 Cassette Strainer Cutaway

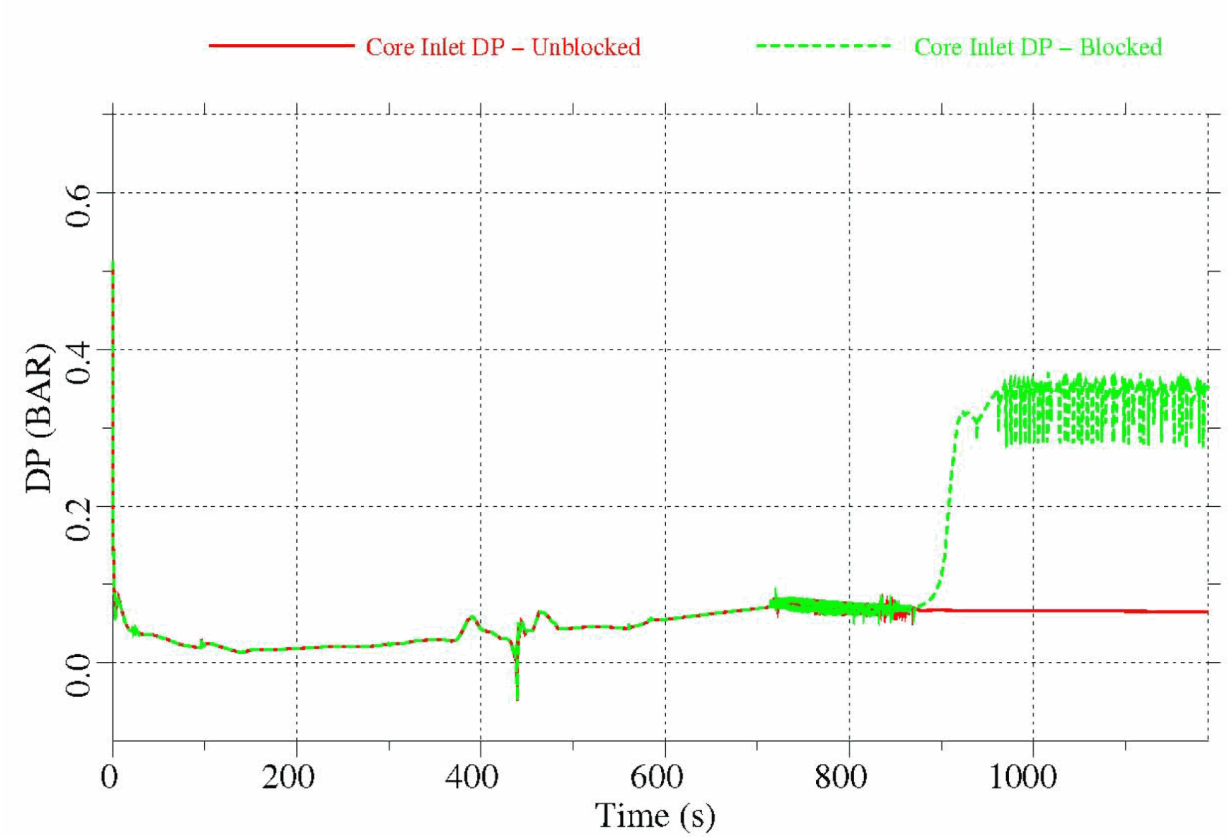

Figure 6C-2 Core Inlet Delta-P for Blocked and Unblocked Cases

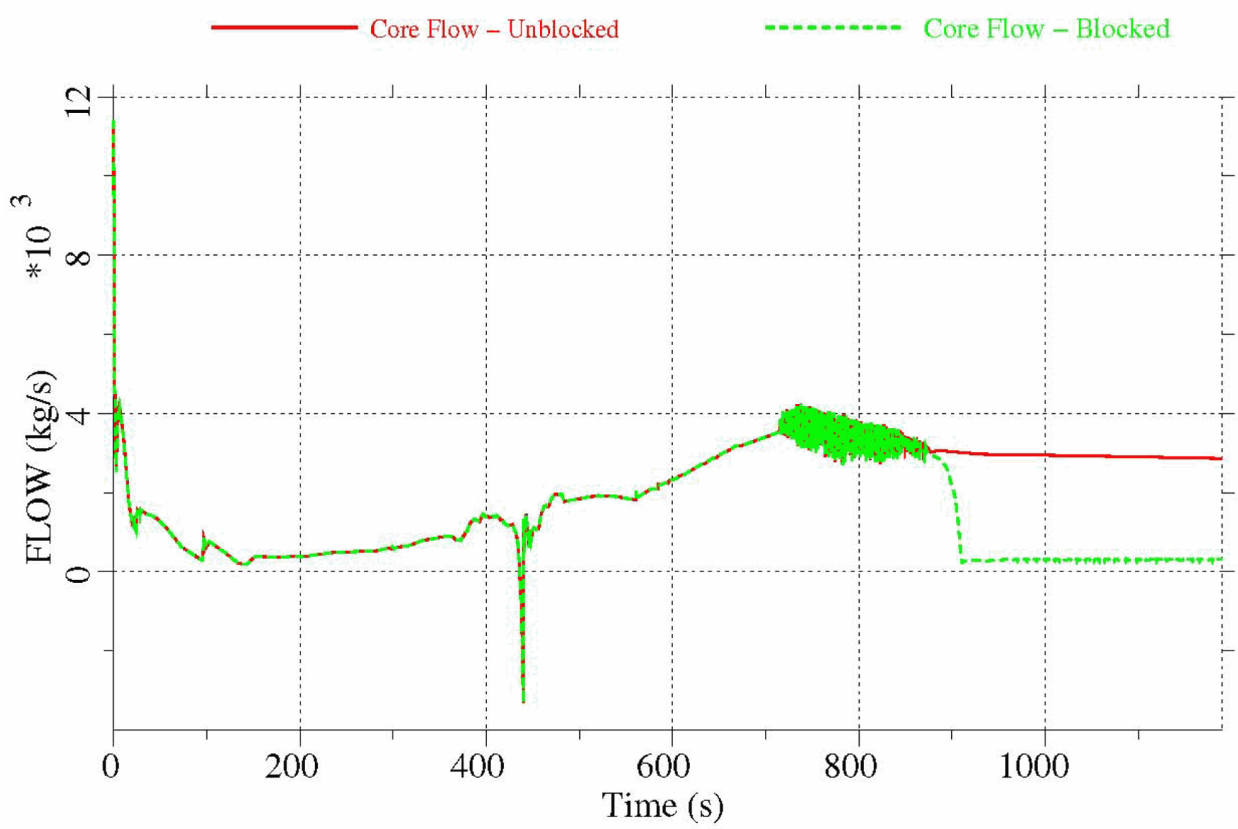

Figure 6C-3 Total Core Flow Rate for Blocked and Unblocked Cases

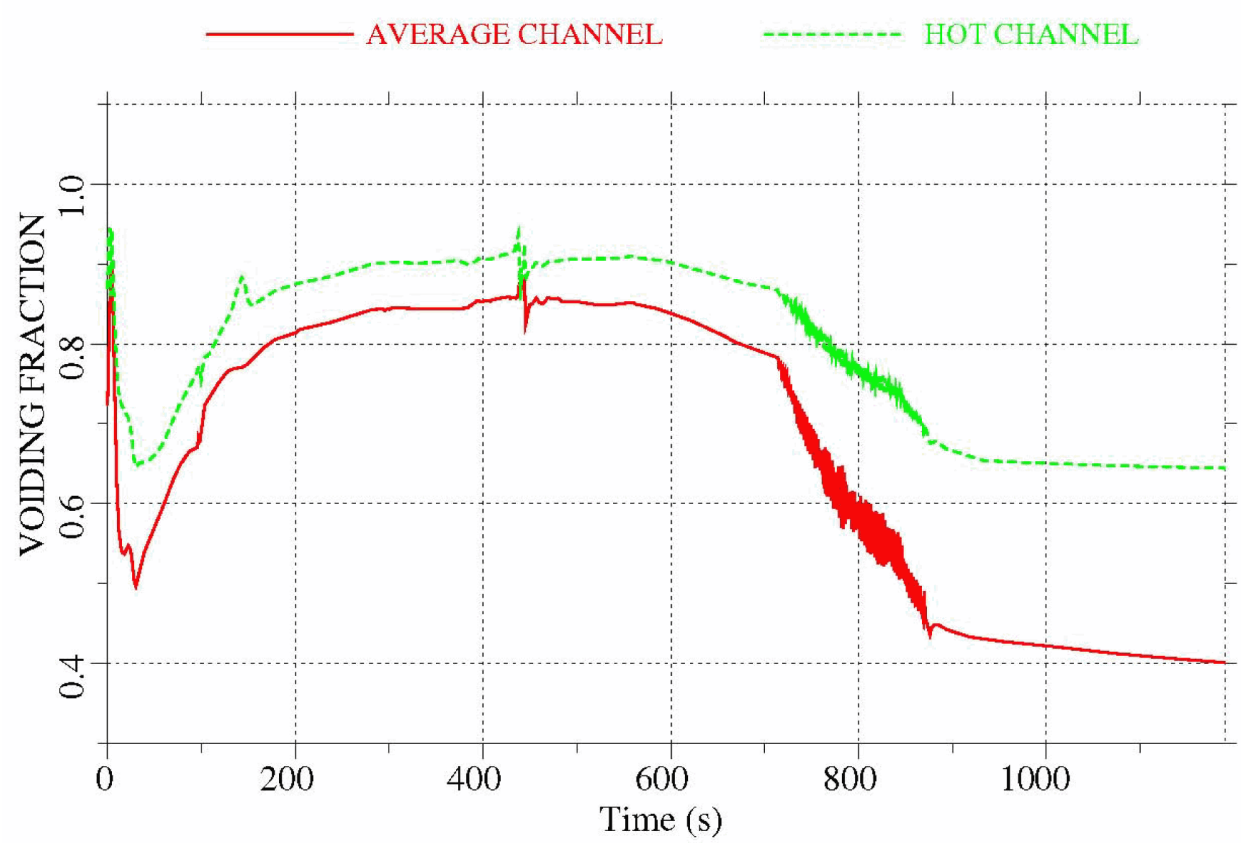

Figure 6C-4a Void Fraction for Unblocked Case

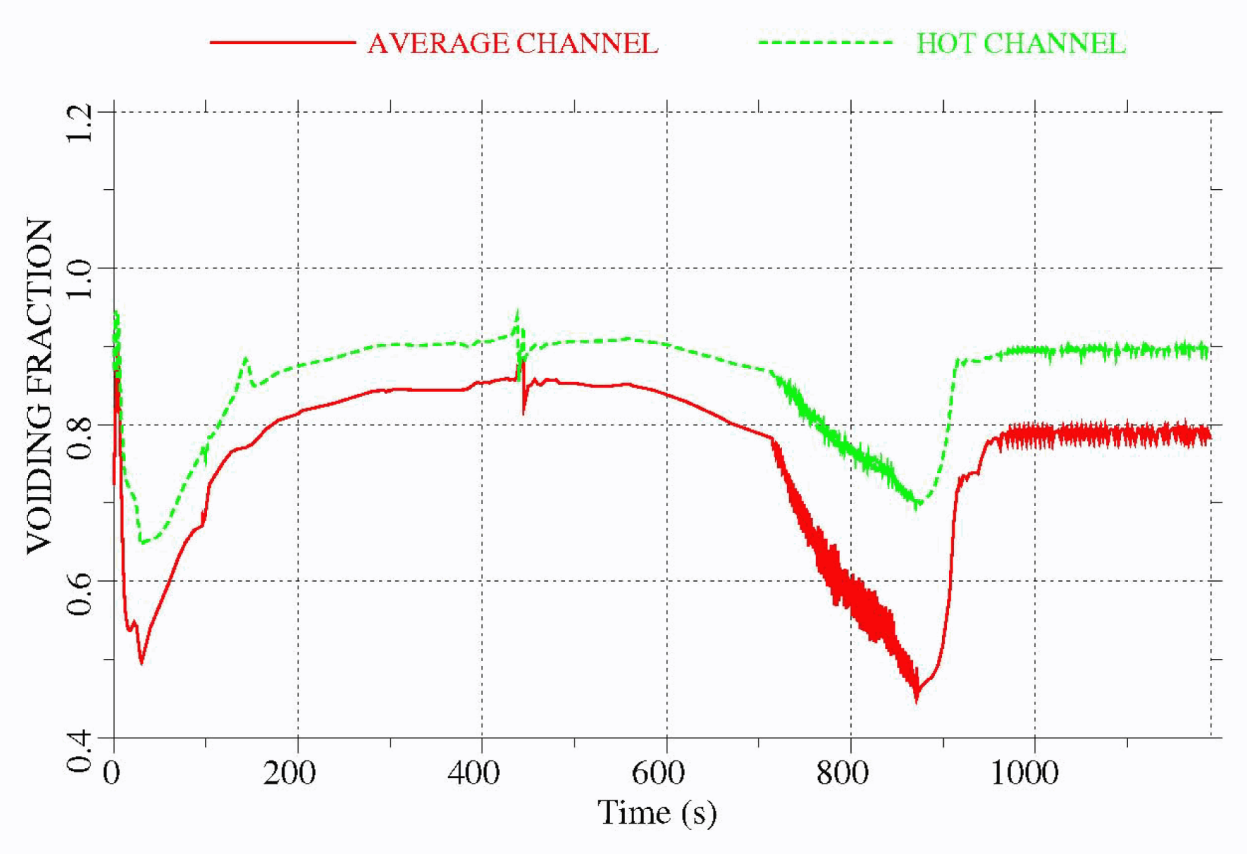

Figure 6C-4b Void Fraction for Blocked Case

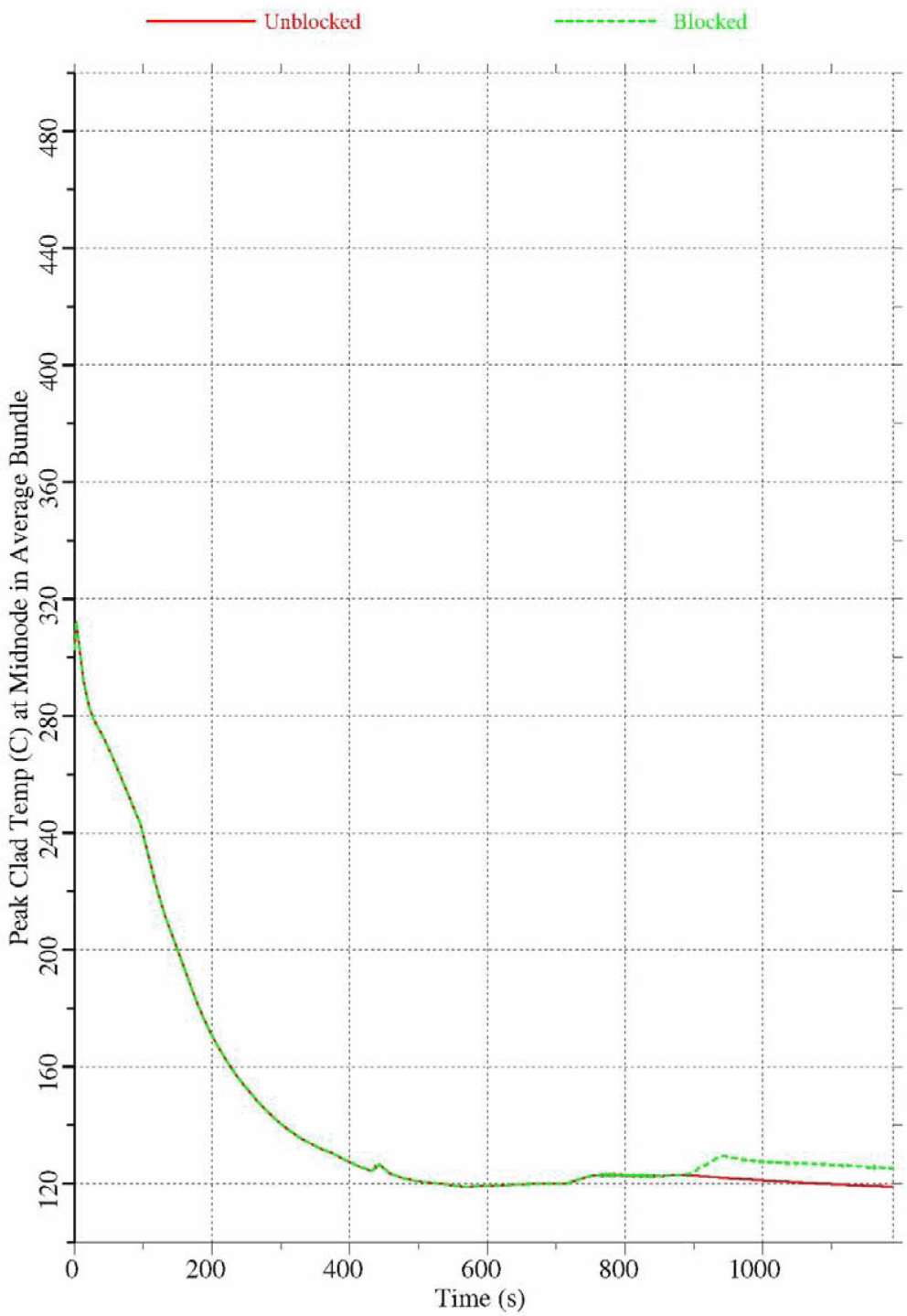

Figure 6C-5 Peak Clad Temperature for Blocked and Unblocked Cases